```
***** ANSYS - ENGINEERING ANALYSIS SYSTEM  RELEASE 5.7.1   *****
ANSYS/Mechanical U
00251976          VERSION=INTEL NT      11:31:44  DEC 23, 2005 CP=   1163.547

 Point Beach Strainer Inner Rim Plate Analysis


 ***** POST1 NODAL STRESS LISTING *****

 LOAD STEP=     4  SUBSTEP=    15
  TIME=    4.0000      LOAD CASE=   0
 SHELL NODAL RESULTS ARE AT TOP
```

NODE	S1	S2	S3	SINT	SEQV
6271	703.44	52.820	0.13391E-01	703.43	678.57
6272	687.71	52.153	0.13092E-01	687.70	663.17
6273	670.89	51.450	0.12771E-01	670.88	646.70
6274	653.00	50.711	0.12430E-01	652.99	629.18
6275	634.06	49.936	0.12070E-01	634.05	610.62
6276	614.07	49.126	0.11689E-01	614.06	591.04
6277	593.06	48.282	0.11288E-01	593.05	570.44
6278	571.03	47.403	0.10868E-01	571.02	548.86
6279	547.99	46.490	0.10429E-01	547.98	526.29
6280	523.97	45.543	0.99715E-02	523.96	502.74
6281	498.97	44.560	0.94949E-02	498.96	478.24
6282	473.00	43.543	0.89998E-02	472.99	452.80
6283	446.07	42.491	0.84863E-02	446.06	426.41
6284	418.20	41.402	0.79547E-02	418.19	399.11
6285	389.39	40.276	0.74051E-02	389.38	370.89
6286	359.65	39.109	0.68376E-02	359.65	341.78
6287	329.00	37.900	0.62524E-02	329.00	311.78
6288	297.45	36.643	0.56496E-02	297.44	280.92
6289	265.00	35.331	0.50292E-02	265.00	249.22
6290	231.69	33.950	0.43914E-02	231.68	216.71
6291	197.53	32.477	0.37359E-02	197.53	183.46
6292	162.59	30.861	0.30628E-02	162.58	149.56
6293	-0.46726E-01	-126.09	-2454.7	2454.7	2394.2
6294	-0.44829E-01	-133.16	-2355.1	2355.1	2291.4
6295	-0.42555E-01	-128.04	-2235.5	2235.4	2174.2
6296	-0.40246E-01	-114.67	-2114.1	2114.0	2059.1
6297	-0.38007E-01	-98.239	-1996.6	1996.5	1949.3
6298	-0.35848E-01	-82.052	-1883.4	1883.4	1843.7
6299	-0.33757E-01	-67.387	-1773.9	1773.9	1741.2
6300	-0.31724E-01	-54.528	-1667.5	1667.5	1640.9
6301	-0.29745E-01	-43.402	-1564.0	1563.9	1542.7
6302	-0.27818E-01	-33.834	-1463.1	1463.1	1446.5
6303	-0.25940E-01	-25.618	-1364.8	1364.8	1352.2
6304	-0.24112E-01	-18.552	-1269.1	1269.1	1260.0
6305	-0.22332E-01	-12.452	-1176.0	1176.0	1169.8
6306	-0.20601E-01	-7.1551	-1085.4	1085.4	1081.8
6307	-0.18914E-01	-2.5207	-997.38	997.36	996.11
6308	1.5684	-0.17301E-01	-911.87	913.44	912.65

1

```
***** ANSYS - ENGINEERING ANALYSIS SYSTEM  RELEASE 5.7.1   *****
ANSYS/Mechanical U
00251976          VERSION=INTEL NT      11:31:44  DEC 23, 2005 CP=   1163.578

 Point Beach Strainer Inner Rim Plate Analysis


 ***** POST1 NODAL STRESS LISTING *****

 LOAD STEP=     4  SUBSTEP=    15
  TIME=    4.0000      LOAD CASE=   0
 SHELL NODAL RESULTS ARE AT TOP
```

NODE	S1	S2	S3	SINT	SEQV
6309	5.2117	-0.15708E-01	-828.90	834.11	831.51
6310	8.4925	-0.14169E-01	-748.44	756.93	752.71
6311	11.482	-0.12678E-01	-670.48	681.96	676.29
6312	14.244	-0.11235E-01	-595.02	609.26	602.26
6313	16.834	-0.98378E-02	-522.04	538.88	530.66
6314	19.310	-0.84866E-02	-451.55	470.86	461.50
6315	21.734	-0.71806E-02	-383.54	405.28	394.86
6316	24.186	-0.59191E-02	-318.06	342.24	330.81
6317	26.787	-0.47015E-02	-255.16	281.95	269.55
6318	29.746	-0.35269E-02	-195.02	224.76	211.46
6319	33.491	-0.23941E-02	-138.02	171.51	157.46
6320	39.064	-0.13011E-02	-85.157	124.22	110.02
6321	49.335	-0.24114E-03	-39.269	88.604	76.898
6322	70.704	0.86941E-03	-6.7185	77.423	74.291
6323	105.86	9.8451	0.16282E-02	105.86	101.30
6324	147.66	17.597	0.25903E-02	147.66	139.70
6325	190.78	21.907	0.34843E-02	190.77	180.82
6326	233.26	24.745	0.43340E-02	233.26	221.93
6327	274.43	26.838	0.51436E-02	274.43	262.04
6328	314.00	28.498	0.59146E-02	314.00	300.76
6329	351.85	29.878	0.66479E-02	351.85	337.90
6330	387.93	31.059	0.73444E-02	387.93	373.37
6331	422.23	32.091	0.80047E-02	422.22	407.13
6332	454.74	33.004	0.86295E-02	454.73	439.16
6333	485.46	33.820	0.92192E-02	485.46	469.46
6334	514.43	34.552	0.97746E-02	514.42	498.05
6335	541.66	35.210	0.10296E-01	541.65	524.93
6336	567.16	35.803	0.10784E-01	567.15	550.13
6337	590.97	36.335	0.11240E-01	590.96	573.66
6338	613.10	36.811	0.11663E-01	613.09	595.54
6339	633.59	37.236	0.12055E-01	633.58	615.81
6340	652.45	37.612	0.12415E-01	652.44	634.47
6341	669.71	37.941	0.12745E-01	669.70	651.56
6342	685.40	38.226	0.13045E-01	685.39	667.10
6343	699.54	38.469	0.13315E-01	699.53	681.12
6344	712.16	38.671	0.13556E-01	712.15	693.63
6345	723.28	38.834	0.13768E-01	723.27	704.66
6346	732.93	38.958	0.13952E-01	732.91	714.24

1

```
***** ANSYS - ENGINEERING ANALYSIS SYSTEM  RELEASE 5.7.1   *****
ANSYS/Mechanical U
00251976          VERSION=INTEL NT      11:31:44  DEC 23, 2005 CP=   1163.594

 Point Beach Strainer Inner Rim Plate Analysis


 ***** POST1 NODAL STRESS LISTING *****

 LOAD STEP=     4  SUBSTEP=    15
  TIME=    4.0000      LOAD CASE=   0
 SHELL NODAL RESULTS ARE AT TOP
```

NODE	S1	S2	S3	SINT	SEQV
6347	741.12	39.046	0.14109E-01	741.11	722.39
6348	747.89	39.098	0.14238E-01	747.88	729.12
6349	753.26	39.115	0.14341E-01	753.25	734.48
6350	757.25	39.098	0.14417E-01	757.24	738.47
6351	759.88	39.048	0.14467E-01	759.87	741.12
6352	761.18	38.966	0.14492E-01	761.17	742.46
6353	761.17	38.853	0.14492E-01	761.16	742.50
6354	759.87	38.708	0.14467E-01	759.85	741.26
6355	757.30	38.534	0.14418E-01	757.28	738.78
6356	753.48	38.330	0.14345E-01	753.46	735.05
6357	748.43	38.097	0.14249E-01	748.42	730.12
6358	742.18	37.835	0.14129E-01	742.16	723.99
6359	734.73	37.546	0.13987E-01	734.72	716.69
6360	726.12	37.229	0.13823E-01	726.11	708.24
6361	716.36	36.885	0.13637E-01	716.35	698.64
6362	705.47	36.514	0.13429E-01	705.46	687.93
6363	693.46	36.116	0.13200E-01	693.45	676.12
6364	680.35	35.693	0.12950E-01	680.34	663.22
6365	666.17	35.243	0.12679E-01	666.15	649.25
6366	650.91	34.768	0.12388E-01	650.90	634.24
6367	634.61	34.267	0.12077E-01	634.60	618.18
6368	617.27	33.740	0.11746E-01	617.26	601.11
6369	598.92	33.187	0.11396E-01	598.90	583.02
6370	579.55	32.607	0.11026E-01	579.54	563.95
6371	559.20	32.001	0.10637E-01	559.19	543.90
6372	537.87	31.368	0.10230E-01	537.86	522.88
6373	515.57	30.706	0.98040E-02	515.56	500.92
6374	492.32	30.015	0.93598E-02	492.31	478.01
6375	468.13	29.292	0.88973E-02	468.12	454.19
6376	443.01	28.536	0.84170E-02	443.00	429.45
6377	416.98	27.743	0.79189E-02	416.97	403.82
6378	390.05	26.910	0.74032E-02	390.04	377.31
6379	362.23	26.029	0.68700E-02	362.23	349.94
6380	333.54	25.093	0.63195E-02	333.54	321.73
6381	304.01	24.088	0.57518E-02	304.00	292.70
6382	273.64	22.996	0.51670E-02	273.64	262.90
6383	242.49	21.785	0.45651E-02	242.49	232.37
6384	210.62	20.403	0.39462E-02	210.61	201.19

1

```
***** ANSYS - ENGINEERING ANALYSIS SYSTEM  RELEASE 5.7.1   *****
ANSYS/Mechanical U
00251976          VERSION=INTEL NT      11:31:44  DEC 23, 2005 CP=   1163.594

 Point Beach Strainer Inner Rim Plate Analysis


 ***** POST1 NODAL STRESS LISTING *****

 LOAD STEP=     4  SUBSTEP=    15
  TIME=    4.0000      LOAD CASE=   0
 SHELL NODAL RESULTS ARE AT TOP
```

NODE	S1	S2	S3	SINT	SEQV
6385	178.11	18.754	0.33100E-02	178.10	169.51
6386	145.17	16.644	0.26560E-02	145.16	137.60
6387	-0.44730E-01	-39.328	-2350.1	2350.0	2330.6
6388	-0.43187E-01	-44.053	-2269.1	2269.0	2247.3
6389	-0.41325E-01	-46.550	-2171.3	2171.3	2148.4
6390	-0.39279E-01	-45.407	-2064.1	2064.0	2041.7
6391	-0.37169E-01	-41.193	-1953.6	1953.5	1933.3
6392	-0.35064E-01	-35.205	-1843.5	1843.5	1826.1
6393	-0.32998E-01	-28.625	-1735.6	1735.6	1721.5
6394	-0.30985E-01	-22.211	-1630.6	1630.6	1619.6
6395	-0.29030E-01	-16.338	-1528.6	1528.6	1520.5
6396	-0.27134E-01	-11.134	-1429.7	1429.7	1424.2
6397	-0.25294E-01	-6.6020	-1333.8	1333.8	1330.5
6398	-0.23506E-01	-2.6844	-1240.8	1240.8	1239.5
6399	0.69706	-0.21830E-01	-1150.7	1151.4	1151.0
6400	3.6245	-0.20126E-01	-1063.4	1067.0	1065.2
6401	6.1766	-0.18502E-01	-978.76	984.94	981.86
6402	8.4246	-0.16932E-01	-896.83	905.26	901.07
6403	10.433	-0.15412E-01	-817.53	827.96	822.79
6404	12.258	-0.13941E-01	-740.80	753.06	747.00
6405	13.954	-0.12518E-01	-666.62	680.57	673.70
6406	15.571	-0.11142E-01	-594.95	610.52	602.88
6407	17.164	-0.98119E-02	-525.78	542.94	534.56
6408	18.791	-0.85266E-02	-459.10	477.89	468.78
6409	20.529	-0.72855E-02	-394.93	415.46	405.58
6410	22.482	-0.60877E-02	-333.33	355.81	345.12
6411	24.814	-0.49326E-02	-274.40	299.22	287.61
6412	27.798	-0.38193E-02	-218.38	246.18	233.52
6413	31.940	-0.27472E-02	-165.72	197.66	183.79
6414	38.238	-0.17155E-02	-117.40	155.63	140.47
6415	48.680	-0.72342E-03	-75.343	124.02	108.23
6416	66.441	0.22981E-03	-42.707	109.15	95.267
6417	93.516	0.11455E-02	-21.443	114.96	105.88
6418	127.61	0.20266E-02	-9.2214	136.83	132.46
6419	164.87	0.28978E-02	-2.1642	167.03	165.96
6420	202.84	2.2197	0.36118E-02	202.84	201.74
6421	240.32	5.1629	0.44005E-02	240.32	237.78
6422	276.74	7.2688	0.51343E-02	276.74	273.18

1

```
***** ANSYS - ENGINEERING ANALYSIS SYSTEM  RELEASE 5.7.1   *****
ANSYS/Mechanical U
00251976          VERSION=INTEL NT      11:31:44  DEC 23, 2005 CP=   1163.609

 Point Beach Strainer Inner Rim Plate Analysis


 ***** POST1 NODAL STRESS LISTING *****

 LOAD STEP=     4  SUBSTEP=    15
  TIME=    4.0000      LOAD CASE=   0
 SHELL NODAL RESULTS ARE AT TOP
```

NODE	S1	S2	S3	SINT	SEQV
6423	311.82	8.8512	0.58299E-02	311.81	307.48
6424	345.40	10.085	0.64897E-02	345.40	340.47
6425	377.42	11.076	0.71149E-02	377.41	372.00
6426	407.83	11.887	0.77063E-02	407.83	402.02
6427	436.63	12.564	0.82644E-02	436.62	430.48
6428	463.81	13.134	0.87899E-02	463.80	457.38
6429	489.37	13.619	0.92833E-02	489.36	482.70
6430	513.34	14.034	0.97451E-02	513.33	506.46
6431	535.72	14.390	0.10176E-01	535.71	528.66
6432	556.53	14.696	0.10576E-01	556.52	549.33
6433	575.80	14.958	0.10946E-01	575.79	568.46
6434	593.55	15.182	0.11287E-01	593.53	586.10
6435	609.79	15.371	0.11599E-01	609.78	602.24
6436	624.55	15.530	0.11882E-01	624.53	616.92
6437	637.85	15.660	0.12137E-01	637.83	630.16
6438	649.71	15.765	0.12364E-01	649.70	641.97
6439	660.16	15.846	0.12564E-01	660.15	652.37
6440	669.22	15.905	0.12738E-01	669.21	661.40
6441	676.91	15.942	0.12885E-01	676.89	669.07
6442	683.25	15.960	0.13006E-01	683.24	675.40
6443	688.27	15.960	0.13102E-01	688.25	680.42
6444	691.98	15.942	0.13174E-01	691.97	684.14
6445	694.41	15.907	0.13220E-01	694.40	686.59
6446	695.58	15.855	0.13243E-01	695.57	687.79
6447	695.52	15.788	0.13241E-01	695.50	687.75
6448	694.23	15.706	0.13217E-01	694.22	686.50
6449	691.74	15.609	0.13169E-01	691.73	684.06
6450	688.07	15.498	0.13099E-01	688.06	680.45
6451	683.25	15.373	0.13007E-01	683.23	675.68
6452	677.28	15.233	0.12893E-01	677.26	669.78
6453	670.19	15.080	0.12757E-01	670.17	662.77
6454	661.99	14.914	0.12601E-01	661.98	654.65
6455	652.70	14.734	0.12423E-01	652.69	645.46
6456	642.35	14.540	0.12225E-01	642.34	635.20
6457	630.94	14.332	0.12007E-01	630.93	623.89
6458	618.50	14.111	0.11769E-01	618.49	611.56
6459	605.03	13.875	0.11511E-01	605.02	598.21
6460	590.57	13.624	0.11234E-01	590.55	583.87

1

```
***** ANSYS - ENGINEERING ANALYSIS SYSTEM  RELEASE 5.7.1   *****
ANSYS/Mechanical U
00251976          VERSION=INTEL NT      11:31:44  DEC 23, 2005 CP=   1163.625

 Point Beach Strainer Inner Rim Plate Analysis


 ***** POST1 NODAL STRESS LISTING *****

 LOAD STEP=     4  SUBSTEP=    15
  TIME=    4.0000      LOAD CASE=   0
 SHELL NODAL RESULTS ARE AT TOP

   NODE    S1          S2          S3          SINT        SEQV
   6461   575.11      13.358     0.10939E-01  575.10      568.54
   6462   558.67      13.076     0.10624E-01  558.66      552.24
   6463   541.28      12.776     0.10291E-01  541.27      535.00
   6464   522.94      12.458     0.99396E-02  522.93      516.82
   6465   503.67      12.120     0.95703E-02  503.66      497.71
   6466   483.48      11.759     0.91832E-02  483.47      477.70
   6467   462.38      11.374     0.87785E-02  462.37      456.80
   6468   440.40      10.961     0.83565E-02  440.39      435.02
   6469   417.54      10.515     0.79173E-02  417.53      412.38
   6470   393.82      10.030     0.74611E-02  393.82      388.90
   6471   369.26      9.4994     0.69881E-02  369.26      364.60
   6472   343.88      8.9120     0.64983E-02  343.87      339.51
   6473   317.69      8.2534     0.59920E-02  317.69      313.64
   6474   290.73      7.5026     0.54692E-02  290.73      287.05
   6475   263.04      6.6288     0.49299E-02  263.03      259.79
   6476   234.66      5.5846     0.43740E-02  234.66      231.92
   6477   205.68      4.2943     0.38009E-02  205.68      203.57
   6478   176.24      2.6290     0.32076E-02  176.23      174.94
   6479   146.56     0.35611     0.24924E-02  146.56      146.38
   6480   117.11     0.20202E-02 -2.9772      120.09      118.62

 MINIMUM VALUES
 NODE       4959        4959        4959        2063        2063
 VALUE  -0.60455E-01 -836.79     -3175.7      17.887      16.436

 MAXIMUM VALUES
 NODE       4540        4534        4540        4959        4959
 VALUE    1494.0      97.688     0.28443E-01  3175.6      2850.9
1
```

```
***** ANSYS - ENGINEERING ANALYSIS SYSTEM  RELEASE 5.7.1   *****
ANSYS/Mechanical U
00251976          VERSION=INTEL NT      11:31:44  DEC 23, 2005 CP=   1163.641

 Point Beach Strainer Inner Rim Plate Analysis


 ***** POST1 NODAL STRESS LISTING *****

 LOAD STEP=     4  SUBSTEP=    15
  TIME=    4.0000      LOAD CASE=   0
 SHELL NODAL RESULTS ARE AT TOP

   NODE    S1          S2          S3          SINT        SEQV
***** ESTIMATED BOUNDS CONSIDERING THE EFFECT OF DISCRETIZATION ERROR *****

MINIMUM VALUES
NODE       3348        4959        4959        2063        2063
VALUE   -68.617     -883.20     -3222.1      13.792      12.342

MAXIMUM VALUES
NODE       4540        4531        4232        4959        4959
VALUE    1503.0      110.18      21.872      3222.0      2897.3
*******************************************************************************
1
```

```
***** ANSYS - ENGINEERING ANALYSIS SYSTEM  RELEASE 5.7.1   *****
ANSYS/Mechanical U
00251976          VERSION=INTEL NT      11:31:45  DEC 23, 2005 CP=   1164.281

 Point Beach Strainer Inner Rim Plate Analysis


 ***** POST1 NODAL STRESS LISTING *****

 LOAD STEP=     4  SUBSTEP=    15
  TIME=    4.0000      LOAD CASE=   0
 SHELL NODAL RESULTS ARE AT BOTTOM
```

NODE	S1	S2	S3	SINT	SEQV
1	0.40730	-2.9257	-1121.5	1121.9	1120.2
2	0.40780	-2.9257	-1121.5	1121.9	1120.2
3	-2.9250	-3.6866	-1084.4	1081.4	1081.1
4	-2.9245	-11.851	-1059.9	1057.0	1052.5
5	-2.9243	-19.044	-1046.2	1043.2	1035.3
6	-2.9242	-21.822	-1041.8	1038.8	1029.5
7	-2.9243	-19.045	-1046.2	1043.2	1035.3
8	-2.9245	-11.851	-1059.9	1057.0	1052.5
9	-2.9250	-3.6864	-1084.4	1081.4	1081.1
10	78.622	-2.9062	-173.71	252.33	223.04
11	0.39121	-2.9261	-1141.2	1141.6	1140.0
12	0.37173	-2.9264	-1161.4	1161.7	1160.1
13	0.34909	-2.9268	-1181.9	1182.2	1180.6
14	0.32307	-2.9272	-1202.8	1203.1	1201.5
15	0.29351	-2.9276	-1224.0	1224.3	1222.7
16	0.26028	-2.9280	-1245.7	1245.9	1244.3
17	0.22326	-2.9285	-1267.6	1267.8	1266.3
18	0.18238	-2.9289	-1289.9	1290.1	1288.5
19	0.13753	-2.9293	-1312.5	1312.6	1311.1
20	0.88657E-01	-2.9298	-1335.4	1335.5	1334.0
21	0.35707E-01	-2.9302	-1358.6	1358.6	1357.1
22	-0.21365E-01	-2.9306	-1382.0	1381.9	1380.5
23	-0.82585E-01	-2.9311	-1405.6	1405.5	1404.1
24	-0.14797	-2.9315	-1429.4	1429.3	1427.9
25	-0.21754	-2.9320	-1453.5	1453.2	1451.9
26	-0.29127	-2.9325	-1477.6	1477.3	1476.0
27	-0.36915	-2.9329	-1501.9	1501.5	1500.2
28	-0.45116	-2.9334	-1526.2	1525.7	1524.5
29	-0.53725	-2.9339	-1550.5	1550.0	1548.8
30	-0.62737	-2.9343	-1574.9	1574.3	1573.1
31	-0.72147	-2.9348	-1599.2	1598.5	1597.4
32	-0.81947	-2.9352	-1623.5	1622.7	1621.6
33	-0.92127	-2.9357	-1647.6	1646.7	1645.7
34	-1.0268	-2.9362	-1671.5	1670.5	1669.6
35	-1.1359	-2.9366	-1695.3	1694.1	1693.2
36	-1.2486	-2.9371	-1718.7	1717.5	1716.6
37	-1.3645	-2.9375	-1741.9	1740.5	1739.7
38	-1.4837	-2.9379	-1764.6	1763.1	1762.4

1

```
***** ANSYS - ENGINEERING ANALYSIS SYSTEM  RELEASE 5.7.1   *****
ANSYS/Mechanical U
00251976          VERSION=INTEL NT      11:31:45  DEC 23, 2005 CP=   1164.297

 Point Beach Strainer Inner Rim Plate Analysis


 ***** POST1 NODAL STRESS LISTING *****

 LOAD STEP=     4  SUBSTEP=    15
  TIME=    4.0000      LOAD CASE=   0
 SHELL NODAL RESULTS ARE AT BOTTOM
```

NODE	S1	S2	S3	SINT	SEQV
39	-1.6059	-2.9384	-1787.0	1785.4	1784.7
40	-1.7311	-2.9388	-1808.8	1807.1	1806.5
41	-1.8589	-2.9392	-1830.2	1828.3	1827.8
42	-1.9892	-2.9396	-1850.9	1848.9	1848.4
43	-2.1218	-2.9400	-1871.0	1868.8	1868.4
44	-2.2564	-2.9403	-1890.3	1888.1	1887.7
45	-2.3929	-2.9407	-1908.9	1906.5	1906.2
46	-2.5308	-2.9410	-1926.6	1924.0	1923.8
47	-2.6701	-2.9413	-1943.4	1940.7	1940.6
48	-2.8103	-2.9416	-1959.2	1956.4	1956.3
49	-2.9420	-2.9510	-1973.9	1971.0	1971.0
50	-2.9422	-3.0922	-1987.5	1984.6	1984.5
51	-2.9424	-3.2333	-1999.9	1997.0	1996.9
52	-2.9426	-3.3738	-2011.1	2008.1	2007.9
53	-2.9428	-3.5133	-2020.9	2017.9	2017.6
54	-2.9430	-3.6515	-2029.2	2026.3	2025.9
55	-2.9431	-3.7877	-2036.1	2033.1	2032.7
56	-2.9432	-3.9213	-2041.3	2038.4	2037.9
57	-2.9433	-4.0519	-2044.9	2041.9	2041.4
58	-2.9433	-4.1786	-2046.7	2043.8	2043.1
59	-2.9433	-4.3007	-2046.7	2043.8	2043.1
60	-2.9433	-4.4174	-2044.8	2041.8	2041.1
61	-2.9432	-4.5278	-2040.8	2037.9	2037.1
62	-2.9431	-4.6308	-2034.8	2031.8	2031.0
63	-2.9429	-4.7254	-2026.6	2023.6	2022.7
64	-2.9427	-4.8102	-2016.1	2013.1	2012.2
65	-2.9425	-4.8838	-2003.2	2000.3	1999.3
66	-2.9422	-4.9447	-1987.9	1985.0	1984.0
67	-2.9418	-4.9910	-1970.1	1967.2	1966.1
68	-2.9415	-5.0206	-1949.6	1946.7	1945.7
69	-2.9410	-5.0313	-1926.5	1923.5	1922.5
70	-2.9405	-5.0204	-1900.4	1897.5	1896.5
71	-2.9400	-4.9849	-1871.5	1868.6	1867.6
72	-2.9394	-4.9214	-1839.6	1836.7	1835.7
73	-2.9387	-4.8257	-1804.6	1801.7	1800.7
74	-2.9380	-4.6932	-1766.4	1763.5	1762.6
75	-2.9372	-4.5184	-1725.0	1722.0	1721.2
76	-2.9363	-4.2949	-1680.2	1677.2	1676.5

1

```
***** ANSYS - ENGINEERING ANALYSIS SYSTEM  RELEASE 5.7.1   *****
ANSYS/Mechanical U
00251976          VERSION=INTEL NT      11:31:45  DEC 23, 2005 CP=   1164.328

 Point Beach Strainer Inner Rim Plate Analysis


 ***** POST1 NODAL STRESS LISTING *****

 LOAD STEP=     4  SUBSTEP=    15
  TIME=    4.0000      LOAD CASE=   0
 SHELL NODAL RESULTS ARE AT BOTTOM
```

NODE	S1	S2	S3	SINT	SEQV
77	-2.9354	-4.0149	-1631.9	1628.9	1628.4
78	-2.9344	-3.6692	-1580.0	1577.1	1576.7
79	-2.9333	-3.2463	-1524.6	1521.7	1521.5
80	-2.7326	-2.9322	-1465.4	1462.7	1462.6
81	-2.1104	-2.9310	-1402.5	1400.4	1400.0
82	-1.3580	-2.9297	-1335.7	1334.3	1333.5
83	-0.44691	-2.9283	-1264.9	1264.5	1263.3
84	0.65988	-2.9269	-1190.2	1190.9	1189.1
85	2.0122	-2.9254	-1111.5	1113.5	1111.0
86	3.6781	-2.9237	-1028.7	1032.3	1029.0
87	5.7540	-2.9221	-941.80	947.56	943.25
88	8.3785	-2.9203	-850.94	859.32	853.72
89	11.766	-2.9184	-756.13	767.89	760.66
90	16.239	-2.9165	-657.48	673.72	664.35
91	22.402	-2.9144	-555.10	577.50	565.27
92	31.087	-2.9122	-448.96	480.04	463.98
93	45.051	-2.9099	-338.36	383.41	361.82
94	66.547	-2.9073	-221.51	288.05	260.37
95	93.723	-2.9062	-188.82	282.54	248.73
96	40.074	-2.9067	-158.87	198.94	181.31
97	22.783	-2.9069	-152.53	175.31	163.99
98	18.138	-2.9069	-152.08	170.22	160.73
99	18.551	-2.9069	-153.50	172.05	162.39
100	21.518	-2.9070	-155.46	176.98	166.12
101	30.212	-2.9070	-159.96	190.18	175.97
102	52.199	-2.9067	-171.00	223.20	201.38
103	81.460	-2.9078	-246.49	327.95	294.96
104	59.638	-2.9100	-345.83	405.47	378.09
105	44.588	-2.9122	-449.10	493.69	471.73
106	33.565	-2.9143	-552.50	586.06	568.70
107	25.165	-2.9164	-654.03	679.19	665.60
108	18.616	-2.9183	-752.64	771.26	760.72
109	13.450	-2.9202	-847.77	861.22	853.15
110	9.3490	-2.9220	-939.08	948.43	942.35
111	6.0890	-2.9237	-1026.4	1032.5	1028.0
112	3.4986	-2.9253	-1109.7	1113.2	1110.0
113	1.4445	-2.9268	-1188.8	1190.3	1188.1
114	-0.17906	-2.9283	-1263.9	1263.8	1262.4

1

```
***** ANSYS - ENGINEERING ANALYSIS SYSTEM  RELEASE 5.7.1   *****
ANSYS/Mechanical U
00251976          VERSION=INTEL NT      11:31:45  DEC 23, 2005 CP=   1164.344

 Point Beach Strainer Inner Rim Plate Analysis


 ***** POST1 NODAL STRESS LISTING *****

 LOAD STEP=     4  SUBSTEP=    15
  TIME=    4.0000      LOAD CASE=   0
 SHELL NODAL RESULTS ARE AT BOTTOM
```

NODE	S1	S2	S3	SINT	SEQV
115	-1.4571	-2.9297	-1335.0	1333.6	1332.8
116	-2.4576	-2.9310	-1402.1	1399.6	1399.4
117	-2.9322	-3.2356	-1465.3	1462.3	1462.2
118	-2.9333	-3.8351	-1524.6	1521.7	1521.2
119	-2.9344	-4.2915	-1580.2	1577.2	1576.6
120	-2.9354	-4.6333	-1632.1	1629.2	1628.3
121	-2.9363	-4.8833	-1680.4	1677.5	1676.5
122	-2.9372	-5.0597	-1725.3	1722.4	1721.3
123	-2.9380	-5.1772	-1766.8	1763.9	1762.7
124	-2.9387	-5.2475	-1805.0	1802.1	1800.9
125	-2.9394	-5.2800	-1840.0	1837.1	1835.9
126	-2.9400	-5.2820	-1871.9	1869.0	1867.8
127	-2.9405	-5.2595	-1900.8	1897.8	1896.7
128	-2.9410	-5.2173	-1926.8	1923.8	1922.7
129	-2.9415	-5.1590	-1949.9	1947.0	1945.9
130	-2.9419	-5.0876	-1970.4	1967.4	1966.3
131	-2.9422	-5.0055	-1988.2	1985.2	1984.2
132	-2.9425	-4.9145	-2003.4	2000.5	1999.5
133	-2.9427	-4.8160	-2016.3	2013.3	2012.4
134	-2.9429	-4.7113	-2026.7	2023.8	2022.9
135	-2.9431	-4.6012	-2034.9	2032.0	2031.1
136	-2.9432	-4.4866	-2040.9	2038.0	2037.2
137	-2.9433	-4.3680	-2044.8	2041.9	2041.2
138	-2.9433	-4.2460	-2046.8	2043.8	2043.2
139	-2.9433	-4.1209	-2046.8	2043.8	2043.2
140	-2.9433	-3.9933	-2044.9	2042.0	2041.4
141	-2.9432	-3.8634	-2041.3	2038.4	2037.9
142	-2.9431	-3.7316	-2036.1	2033.1	2032.7
143	-2.9430	-3.5982	-2029.2	2026.3	2025.9
144	-2.9428	-3.4635	-2020.9	2017.9	2017.7
145	-2.9426	-3.3278	-2011.1	2008.1	2007.9
146	-2.9424	-3.1914	-1999.9	1997.0	1996.9
147	-2.9422	-3.0546	-1987.5	1984.6	1984.5
148	-2.9177	-2.9419	-1973.9	1971.0	1971.0
149	-2.7809	-2.9416	-1959.2	1956.4	1956.3
150	-2.6445	-2.9413	-1943.4	1940.7	1940.6
151	-2.5088	-2.9410	-1926.6	1924.1	1923.8
152	-2.3741	-2.9407	-1908.9	1906.5	1906.2

1

```
***** ANSYS - ENGINEERING ANALYSIS SYSTEM  RELEASE 5.7.1   *****
ANSYS/Mechanical U
00251976          VERSION=INTEL NT      11:31:45  DEC 23, 2005 CP=   1164.375

 Point Beach Strainer Inner Rim Plate Analysis


 ***** POST1 NODAL STRESS LISTING *****

 LOAD STEP=     4  SUBSTEP=    15
  TIME=    4.0000      LOAD CASE=   0
 SHELL NODAL RESULTS ARE AT BOTTOM
```

NODE	S1	S2	S3	SINT	SEQV
153	-2.2406	-2.9403	-1890.3	1888.1	1887.7
154	-2.1086	-2.9400	-1870.9	1868.8	1868.4
155	-1.9784	-2.9396	-1850.9	1848.9	1848.4
156	-1.8502	-2.9392	-1830.2	1828.3	1827.8
157	-1.7241	-2.9388	-1808.8	1807.1	1806.5
158	-1.6005	-2.9384	-1787.0	1785.4	1784.7
159	-1.4795	-2.9379	-1764.6	1763.1	1762.4
160	-1.3614	-2.9375	-1741.9	1740.5	1739.7
161	-1.2462	-2.9371	-1718.7	1717.5	1716.6
162	-1.1343	-2.9366	-1695.3	1694.1	1693.2
163	-1.0257	-2.9362	-1671.5	1670.5	1669.6
164	-0.92053	-2.9357	-1647.6	1646.7	1645.7
165	-0.81902	-2.9352	-1623.5	1622.7	1621.6
166	-0.72124	-2.9348	-1599.2	1598.5	1597.4
167	-0.62730	-2.9343	-1574.9	1574.3	1573.1
168	-0.53729	-2.9339	-1550.5	1550.0	1548.8
169	-0.45130	-2.9334	-1526.2	1525.7	1524.5
170	-0.36940	-2.9329	-1501.9	1501.5	1500.2
171	-0.29163	-2.9325	-1477.6	1477.3	1476.0
172	-0.21803	-2.9320	-1453.5	1453.2	1451.9
173	-0.14864	-2.9315	-1429.4	1429.3	1427.9
174	-0.83470E-01	-2.9311	-1405.6	1405.5	1404.1
175	-0.22513E-01	-2.9306	-1382.0	1382.0	1380.5
176	0.34247E-01	-2.9302	-1358.6	1358.6	1357.1
177	0.86844E-01	-2.9298	-1335.4	1335.5	1334.0
178	0.13533	-2.9293	-1312.5	1312.6	1311.1
179	0.17979	-2.9289	-1289.9	1290.1	1288.5
180	0.22030	-2.9285	-1267.6	1267.8	1266.3
181	0.25699	-2.9281	-1245.7	1245.9	1244.3
182	0.29001	-2.9276	-1224.0	1224.3	1222.7
183	0.31953	-2.9272	-1202.8	1203.1	1201.5
184	0.34576	-2.9268	-1181.9	1182.2	1180.6
185	0.36893	-2.9264	-1161.4	1161.7	1160.1
186	0.38934	-2.9261	-1141.2	1141.6	1140.0
187	-2.9253	-3.8552	-1102.9	1100.0	1099.5
188	-2.9257	-4.0308	-1121.9	1118.9	1118.4
189	-2.9261	-4.2139	-1141.1	1138.2	1137.6
190	-2.9264	-4.4048	-1160.8	1157.8	1157.1

1

```
***** ANSYS - ENGINEERING ANALYSIS SYSTEM  RELEASE 5.7.1   *****
ANSYS/Mechanical U
00251976          VERSION=INTEL NT      11:31:45  DEC 23, 2005 CP=   1164.391

 Point Beach Strainer Inner Rim Plate Analysis


 ***** POST1 NODAL STRESS LISTING *****

 LOAD STEP=     4  SUBSTEP=    15
  TIME=    4.0000      LOAD CASE=   0
 SHELL NODAL RESULTS ARE AT BOTTOM
```

NODE	S1	S2	S3	SINT	SEQV
191	-2.9268	-4.6036	-1180.7	1177.8	1177.0
192	-2.9272	-4.8106	-1201.1	1198.1	1197.2
193	-2.9276	-5.0258	-1221.7	1218.8	1217.7
194	-2.9280	-5.2492	-1242.6	1239.7	1238.5
195	-2.9284	-5.4809	-1263.9	1260.9	1259.7
196	-2.9288	-5.7209	-1285.4	1282.4	1281.0
197	-2.9292	-5.9689	-1307.1	1304.2	1302.7
198	-2.9296	-6.2249	-1329.1	1326.2	1324.5
199	-2.9301	-6.4887	-1351.3	1348.4	1346.6
200	-2.9305	-6.7601	-1373.7	1370.8	1368.9
201	-2.9309	-7.0389	-1396.3	1393.3	1391.3
202	-2.9314	-7.3249	-1418.9	1416.0	1413.8
203	-2.9318	-7.6177	-1441.7	1438.8	1436.5
204	-2.9322	-7.9171	-1464.6	1461.6	1459.2
205	-2.9327	-8.2227	-1487.5	1484.5	1481.9
206	-2.9331	-8.5342	-1510.3	1507.4	1504.6
207	-2.9335	-8.8512	-1533.2	1530.3	1527.3
208	-2.9340	-9.1733	-1556.0	1553.0	1549.9
209	-2.9344	-9.5001	-1578.6	1575.7	1572.4
210	-2.9348	-9.8311	-1601.1	1598.2	1594.7
211	-2.9352	-10.166	-1623.4	1620.4	1616.8
212	-2.9357	-10.504	-1645.4	1642.5	1638.7
213	-2.9361	-10.845	-1667.1	1664.2	1660.3
214	-2.9365	-11.188	-1688.5	1685.6	1681.5
215	-2.9369	-11.532	-1709.5	1706.6	1702.3
216	-2.9373	-11.878	-1730.0	1727.1	1722.6
217	-2.9377	-12.224	-1750.1	1747.1	1742.5
218	-2.9380	-12.570	-1769.5	1766.6	1761.8
219	-2.9384	-12.916	-1788.3	1785.4	1780.4
220	-2.9387	-13.259	-1806.5	1803.6	1798.4
221	-2.9391	-13.601	-1823.9	1821.0	1815.7
222	-2.9394	-13.940	-1840.6	1837.6	1832.1
223	-2.9397	-14.276	-1856.3	1853.4	1847.7
224	-2.9400	-14.608	-1871.1	1868.2	1862.4
225	-2.9402	-14.934	-1885.0	1882.0	1876.1
226	-2.9405	-15.255	-1897.7	1894.8	1888.7
227	-2.9407	-15.570	-1909.4	1906.4	1900.2
228	-2.9409	-15.878	-1919.8	1916.9	1910.4

1

```
***** ANSYS - ENGINEERING ANALYSIS SYSTEM  RELEASE 5.7.1   *****
ANSYS/Mechanical U
00251976          VERSION=INTEL NT      11:31:45  DEC 23, 2005 CP=   1164.406

 Point Beach Strainer Inner Rim Plate Analysis


 ***** POST1 NODAL STRESS LISTING *****

 LOAD STEP=     4  SUBSTEP=    15
  TIME=    4.0000      LOAD CASE=   0
 SHELL NODAL RESULTS ARE AT BOTTOM
```

NODE	S1	S2	S3	SINT	SEQV
229	-2.9411	-16.178	-1929.0	1926.0	1919.5
230	-2.9412	-16.470	-1936.8	1933.9	1927.1
231	-2.9413	-16.753	-1943.2	1940.3	1933.4
232	-2.9414	-17.026	-1948.1	1945.2	1938.2
233	-2.9415	-17.288	-1951.4	1948.5	1941.4
234	-2.9415	-17.539	-1953.1	1950.2	1942.9
235	-2.9415	-17.778	-1953.1	1950.1	1942.7
236	-2.9415	-18.005	-1951.2	1948.3	1940.8
237	-2.9414	-18.218	-1947.5	1944.5	1936.9
238	-2.9413	-18.417	-1941.8	1938.8	1931.1
239	-2.9412	-18.600	-1934.0	1931.1	1923.3
240	-2.9410	-18.768	-1924.1	1921.2	1913.3
241	-2.9407	-18.919	-1912.0	1909.0	1901.1
242	-2.9405	-19.051	-1897.5	1894.6	1886.6
243	-2.9401	-19.164	-1880.7	1877.8	1869.7
244	-2.9398	-19.255	-1861.4	1858.5	1850.4
245	-2.9394	-19.323	-1839.5	1836.6	1828.5
246	-2.9389	-19.364	-1815.0	1812.1	1803.9
247	-2.9384	-19.376	-1787.7	1784.8	1776.6
248	-2.9378	-19.354	-1757.6	1754.7	1746.5
249	-2.9372	-19.293	-1724.5	1721.6	1713.5
250	-2.9365	-19.187	-1688.5	1685.5	1677.5
251	-2.9357	-19.028	-1649.3	1646.4	1638.4
252	-2.9349	-18.805	-1606.9	1604.0	1596.1
253	-2.9340	-18.507	-1561.3	1558.3	1550.6
254	-2.9331	-18.117	-1512.2	1509.3	1501.7
255	-2.9321	-17.616	-1459.7	1456.8	1449.5
256	-2.9310	-16.979	-1403.6	1400.7	1393.7
257	-2.9299	-16.177	-1343.9	1341.0	1334.4
258	-2.9287	-15.171	-1280.5	1277.5	1271.5
259	-2.9274	-13.916	-1213.2	1210.3	1204.8
260	-2.9260	-12.355	-1142.1	1139.2	1134.5
261	-2.9246	-10.419	-1067.1	1064.2	1060.5
262	-2.9231	-8.0241	-988.14	985.22	982.68
263	-2.9214	-5.0687	-905.19	902.27	901.20
264	-1.4304	-2.9198	-818.29	816.86	816.11
265	3.0409	-2.9180	-727.49	730.53	727.57
266	8.5351	-2.9162	-632.94	641.48	635.83

1

```
***** ANSYS - ENGINEERING ANALYSIS SYSTEM  RELEASE 5.7.1   *****
ANSYS/Mechanical U
00251976          VERSION=INTEL NT      11:31:45  DEC 23, 2005 CP=   1164.422

 Point Beach Strainer Inner Rim Plate Analysis


 ***** POST1 NODAL STRESS LISTING *****

 LOAD STEP=     4  SUBSTEP=    15
  TIME=    4.0000      LOAD CASE=   0
 SHELL NODAL RESULTS ARE AT BOTTOM
```

NODE	S1	S2	S3	SINT	SEQV
267	15.315	-2.9143	-534.92	550.23	541.35
268	23.780	-2.9123	-433.93	457.71	444.96
269	34.682	-2.9102	-330.95	365.63	348.36
270	49.697	-2.9080	-228.04	277.74	255.53
271	-2.9249	-12.308	-1077.7	1074.8	1070.1
272	-2.9252	-12.780	-1095.8	1092.9	1088.0
273	-2.9256	-13.268	-1114.3	1111.4	1106.2
274	-2.9259	-13.772	-1133.1	1130.2	1124.8
275	-2.9263	-14.291	-1152.2	1149.3	1143.7
276	-2.9267	-14.827	-1171.7	1168.8	1162.9
277	-2.9270	-15.378	-1191.5	1188.6	1182.4
278	-2.9274	-15.946	-1211.5	1208.6	1202.2
279	-2.9278	-16.529	-1231.9	1229.0	1222.2
280	-2.9282	-17.128	-1252.5	1249.6	1242.5
281	-2.9286	-17.742	-1273.4	1270.4	1263.1
282	-2.9290	-18.370	-1294.5	1291.5	1283.9
283	-2.9294	-19.012	-1315.7	1312.8	1304.8
284	-2.9298	-19.667	-1337.2	1334.3	1326.0
285	-2.9302	-20.336	-1358.8	1355.9	1347.3
286	-2.9306	-21.016	-1380.6	1377.6	1368.7
287	-2.9310	-21.708	-1402.4	1399.5	1390.2
288	-2.9315	-22.410	-1424.3	1421.4	1411.7
289	-2.9319	-23.122	-1446.3	1443.3	1433.3
290	-2.9323	-23.842	-1468.2	1465.3	1454.9
291	-2.9327	-24.571	-1490.1	1487.2	1476.5
292	-2.9331	-25.306	-1511.9	1509.0	1497.9
293	-2.9335	-26.047	-1533.7	1530.7	1519.3
294	-2.9340	-26.792	-1555.2	1552.3	1540.5
295	-2.9344	-27.541	-1576.6	1573.7	1561.5
296	-2.9348	-28.292	-1597.7	1594.8	1582.3
297	-2.9352	-29.045	-1618.6	1615.6	1602.7
298	-2.9355	-29.797	-1639.1	1636.1	1622.9
299	-2.9359	-30.547	-1659.2	1656.3	1642.6
300	-2.9363	-31.295	-1678.9	1676.0	1662.0
301	-2.9367	-32.038	-1698.1	1695.2	1680.8
302	-2.9370	-32.775	-1716.8	1713.8	1699.1
303	-2.9374	-33.506	-1734.8	1731.9	1716.8
304	-2.9377	-34.227	-1752.3	1749.3	1733.9

1

```
***** ANSYS - ENGINEERING ANALYSIS SYSTEM  RELEASE 5.7.1   *****
ANSYS/Mechanical U
00251976          VERSION=INTEL NT      11:31:45  DEC 23, 2005 CP=   1164.438

 Point Beach Strainer Inner Rim Plate Analysis


 ***** POST1 NODAL STRESS LISTING *****

 LOAD STEP=     4  SUBSTEP=    15
  TIME=    4.0000      LOAD CASE=   0
 SHELL NODAL RESULTS ARE AT BOTTOM
```

NODE	S1	S2	S3	SINT	SEQV
305	-2.9380	-34.938	-1769.0	1766.0	1750.3
306	-2.9383	-35.637	-1784.9	1782.0	1765.9
307	-2.9386	-36.322	-1800.1	1797.1	1780.7
308	-2.9389	-36.992	-1814.3	1811.4	1794.6
309	-2.9391	-37.645	-1827.6	1824.6	1807.5
310	-2.9394	-38.280	-1839.8	1836.9	1819.5
311	-2.9396	-38.894	-1851.0	1848.1	1830.4
312	-2.9398	-39.486	-1861.0	1858.1	1840.1
313	-2.9399	-40.054	-1869.8	1866.9	1848.6
314	-2.9401	-40.597	-1877.4	1874.4	1855.9
315	-2.9402	-41.112	-1883.5	1880.6	1861.8
316	-2.9403	-41.599	-1888.2	1885.3	1866.3
317	-2.9404	-42.054	-1891.4	1888.5	1869.3
318	-2.9404	-42.477	-1893.1	1890.1	1870.7
319	-2.9404	-42.865	-1893.1	1890.1	1870.5
320	-2.9404	-43.217	-1891.3	1888.4	1868.5
321	-2.9403	-43.531	-1887.7	1884.8	1864.8
322	-2.9402	-43.804	-1882.3	1879.3	1859.2
323	-2.9400	-44.036	-1874.8	1871.9	1851.7
324	-2.9399	-44.225	-1865.4	1862.4	1842.1
325	-2.9396	-44.367	-1853.7	1850.8	1830.4
326	-2.9394	-44.461	-1839.9	1837.0	1816.6
327	-2.9391	-44.505	-1823.8	1820.8	1800.4
328	-2.9387	-44.496	-1805.3	1802.3	1781.9
329	-2.9383	-44.431	-1784.3	1781.4	1761.0
330	-2.9379	-44.306	-1760.8	1757.8	1737.5
331	-2.9374	-44.118	-1734.6	1731.7	1711.4
332	-2.9368	-43.862	-1705.7	1702.8	1682.7
333	-2.9362	-43.532	-1674.0	1671.1	1651.1
334	-2.9356	-43.121	-1639.4	1636.4	1616.7
335	-2.9348	-42.623	-1601.8	1598.8	1579.4
336	-2.9341	-42.026	-1561.1	1558.1	1539.0
337	-2.9332	-41.319	-1517.2	1514.3	1495.5
338	-2.9323	-40.487	-1470.1	1467.2	1448.8
339	-2.9314	-39.512	-1419.6	1416.7	1398.8
340	-2.9303	-38.370	-1365.7	1362.8	1345.4
341	-2.9292	-37.036	-1308.3	1305.4	1288.7
342	-2.9281	-35.473	-1247.3	1244.3	1228.4

1

```
***** ANSYS - ENGINEERING ANALYSIS SYSTEM  RELEASE 5.7.1   *****
ANSYS/Mechanical U
00251976          VERSION=INTEL NT      11:31:45  DEC 23, 2005 CP=   1164.453

 Point Beach Strainer Inner Rim Plate Analysis


 ***** POST1 NODAL STRESS LISTING *****

 LOAD STEP=     4  SUBSTEP=    15
  TIME=    4.0000      LOAD CASE=   0
 SHELL NODAL RESULTS ARE AT BOTTOM
```

NODE	S1	S2	S3	SINT	SEQV
343	-2.9268	-33.642	-1182.5	1179.6	1164.6
344	-2.9255	-31.489	-1114.0	1111.1	1097.1
345	-2.9241	-28.953	-1041.7	1038.8	1026.0
346	-2.9227	-25.956	-965.41	962.49	951.18
347	-2.9211	-22.409	-885.17	882.25	872.67
348	-2.9195	-18.202	-800.90	797.98	790.45
349	-2.9178	-13.209	-712.59	709.67	704.58
350	-2.9160	-7.2768	-620.20	617.29	615.12
351	-0.21897	-2.9142	-523.77	523.55	522.21
352	8.2486	-2.9123	-423.38	431.63	426.16
353	18.606	-2.9102	-319.28	337.89	327.66
354	31.967	-2.9081	-212.33	244.30	228.86
355	-2.9246	-19.745	-1063.5	1060.6	1052.3
356	-2.9249	-20.467	-1081.2	1078.3	1069.6
357	-2.9253	-21.210	-1099.2	1096.3	1087.3
358	-2.9256	-21.975	-1117.6	1114.7	1105.3
359	-2.9260	-22.762	-1136.3	1133.4	1123.6
360	-2.9263	-23.571	-1155.3	1152.3	1142.2
361	-2.9267	-24.402	-1174.6	1171.6	1161.0
362	-2.9271	-25.253	-1194.1	1191.2	1180.2
363	-2.9275	-26.126	-1214.0	1211.1	1199.6
364	-2.9278	-27.019	-1234.1	1231.2	1219.3
365	-2.9282	-27.932	-1254.5	1251.5	1239.2
366	-2.9286	-28.864	-1275.0	1272.1	1259.4
367	-2.9290	-29.815	-1295.8	1292.9	1279.7
368	-2.9294	-30.782	-1316.8	1313.8	1300.1
369	-2.9298	-31.766	-1337.9	1334.9	1320.8
370	-2.9302	-32.765	-1359.1	1356.2	1341.5
371	-2.9306	-33.778	-1380.4	1377.5	1362.3
372	-2.9310	-34.804	-1401.8	1398.9	1383.2
373	-2.9314	-35.842	-1423.2	1420.3	1404.1
374	-2.9318	-36.890	-1444.6	1441.7	1425.0
375	-2.9323	-37.946	-1466.0	1463.1	1445.9
376	-2.9327	-39.010	-1487.3	1484.4	1466.7
377	-2.9331	-40.080	-1508.5	1505.6	1487.4
378	-2.9335	-41.153	-1529.6	1526.7	1507.9
379	-2.9339	-42.229	-1550.5	1547.5	1528.3
380	-2.9343	-43.305	-1571.1	1568.2	1548.4

1

```
***** ANSYS - ENGINEERING ANALYSIS SYSTEM  RELEASE 5.7.1   *****
ANSYS/Mechanical U
00251976          VERSION=INTEL NT      11:31:45  DEC 23, 2005 CP=   1164.484

 Point Beach Strainer Inner Rim Plate Analysis


 ***** POST1 NODAL STRESS LISTING *****

 LOAD STEP=     4  SUBSTEP=    15
  TIME=    4.0000      LOAD CASE=   0
 SHELL NODAL RESULTS ARE AT BOTTOM
```

NODE	S1	S2	S3	SINT	SEQV
381	-2.9346	-44.380	-1591.4	1588.5	1568.2
382	-2.9350	-45.451	-1611.5	1608.5	1587.7
383	-2.9354	-46.517	-1631.1	1628.2	1606.8
384	-2.9358	-47.576	-1650.4	1647.4	1625.6
385	-2.9361	-48.626	-1669.1	1666.2	1643.8
386	-2.9365	-49.664	-1687.3	1684.4	1661.5
387	-2.9368	-50.688	-1705.0	1702.1	1678.7
388	-2.9371	-51.696	-1722.0	1719.1	1695.2
389	-2.9374	-52.685	-1738.4	1735.4	1711.1
390	-2.9377	-53.654	-1753.9	1751.0	1726.2
391	-2.9380	-54.599	-1768.7	1765.8	1740.5
392	-2.9383	-55.519	-1782.6	1779.7	1754.0
393	-2.9385	-56.411	-1795.6	1792.7	1766.5
394	-2.9388	-57.271	-1807.6	1804.7	1778.1
395	-2.9390	-58.099	-1818.5	1815.6	1788.6
396	-2.9392	-58.890	-1828.3	1825.4	1798.1
397	-2.9393	-59.642	-1836.9	1834.0	1806.3
398	-2.9395	-60.353	-1844.3	1841.4	1813.3
399	-2.9396	-61.020	-1850.3	1847.4	1819.0
400	-2.9397	-61.640	-1855.0	1852.0	1823.4
401	-2.9397	-62.211	-1858.1	1855.2	1826.3
402	-2.9398	-62.729	-1859.7	1856.8	1827.6
403	-2.9398	-63.192	-1859.7	1856.8	1827.4
404	-2.9397	-63.596	-1858.0	1855.1	1825.5
405	-2.9397	-63.940	-1854.6	1851.6	1821.9
406	-2.9396	-64.220	-1849.3	1846.3	1816.5
407	-2.9394	-64.433	-1842.0	1839.1	1809.1
408	-2.9392	-64.576	-1832.8	1829.9	1799.8
409	-2.9390	-64.646	-1821.5	1818.5	1788.5
410	-2.9388	-64.640	-1808.0	1805.1	1775.0
411	-2.9385	-64.554	-1792.3	1789.3	1759.3
412	-2.9381	-64.384	-1774.2	1771.3	1741.4
413	-2.9377	-64.128	-1753.8	1750.8	1721.1
414	-2.9373	-63.779	-1730.8	1727.9	1698.3
415	-2.9368	-63.335	-1705.3	1702.4	1673.0
416	-2.9363	-62.789	-1677.1	1674.2	1645.0
417	-2.9357	-62.135	-1646.1	1643.2	1614.4
418	-2.9350	-61.367	-1612.4	1609.4	1581.0

1

```
***** ANSYS - ENGINEERING ANALYSIS SYSTEM  RELEASE 5.7.1   *****
ANSYS/Mechanical U
00251976          VERSION=INTEL NT      11:31:45  DEC 23, 2005 CP=   1164.484

 Point Beach Strainer Inner Rim Plate Analysis


 ***** POST1 NODAL STRESS LISTING *****

 LOAD STEP=     4  SUBSTEP=    15
  TIME=    4.0000      LOAD CASE=   0
 SHELL NODAL RESULTS ARE AT BOTTOM
```

NODE	S1	S2	S3	SINT	SEQV
419	-2.9343	-60.476	-1575.7	1572.7	1544.8
420	-2.9336	-59.453	-1535.9	1533.0	1505.5
421	-2.9328	-58.286	-1493.1	1490.2	1463.3
422	-2.9319	-56.963	-1447.1	1444.2	1417.9
423	-2.9310	-55.467	-1397.8	1394.9	1369.4
424	-2.9299	-53.779	-1345.1	1342.2	1317.5
425	-2.9289	-51.875	-1289.0	1286.1	1262.3
426	-2.9277	-49.726	-1229.3	1226.4	1203.7
427	-2.9265	-47.296	-1166.0	1163.1	1141.5
428	-2.9253	-44.542	-1098.9	1096.0	1075.8
429	-2.9239	-41.408	-1028.1	1025.1	1006.4
430	-2.9225	-37.825	-953.25	950.33	933.37
431	-2.9210	-33.708	-874.44	871.52	856.54
432	-2.9194	-28.949	-791.53	788.61	775.92
433	-2.9177	-23.416	-704.42	701.50	691.48
434	-2.9160	-16.950	-613.01	610.10	603.20
435	-2.9141	-9.3493	-517.18	514.27	511.08
436	-0.35737	-2.9122	-416.81	416.45	415.18
437	10.523	-2.9102	-311.84	322.37	315.86
438	24.229	-2.9081	-202.47	226.69	214.42
439	-2.9245	-22.616	-1059.0	1056.0	1046.3
440	-2.9248	-23.433	-1076.5	1073.6	1063.5
441	-2.9252	-24.273	-1094.4	1091.5	1081.0
442	-2.9255	-25.137	-1112.6	1109.7	1098.8
443	-2.9259	-26.026	-1131.1	1128.2	1116.9
444	-2.9262	-26.938	-1150.0	1147.1	1135.2
445	-2.9266	-27.874	-1169.1	1166.2	1153.9
446	-2.9270	-28.834	-1188.6	1185.6	1172.9
447	-2.9273	-29.816	-1208.3	1205.3	1192.1
448	-2.9277	-30.820	-1228.2	1225.3	1211.6
449	-2.9281	-31.846	-1248.4	1245.5	1231.3
450	-2.9285	-32.893	-1268.8	1265.9	1251.2
451	-2.9289	-33.959	-1289.4	1286.5	1271.3
452	-2.9293	-35.044	-1310.2	1307.3	1291.5
453	-2.9297	-36.147	-1331.2	1328.2	1311.9
454	-2.9301	-37.266	-1352.2	1349.3	1332.4
455	-2.9305	-38.400	-1373.4	1370.4	1353.1
456	-2.9309	-39.547	-1394.6	1391.7	1373.7

1

```
***** ANSYS - ENGINEERING ANALYSIS SYSTEM  RELEASE 5.7.1   *****
ANSYS/Mechanical U
00251976          VERSION=INTEL NT      11:31:45  DEC 23, 2005 CP=   1164.500

 Point Beach Strainer Inner Rim Plate Analysis


 ***** POST1 NODAL STRESS LISTING *****

 LOAD STEP=     4  SUBSTEP=    15
  TIME=    4.0000      LOAD CASE=   0
 SHELL NODAL RESULTS ARE AT BOTTOM
```

NODE	S1	S2	S3	SINT	SEQV
457	-2.9313	-40.707	-1415.8	1412.9	1394.4
458	-2.9317	-41.877	-1437.1	1434.2	1415.1
459	-2.9321	-43.056	-1458.3	1455.4	1435.7
460	-2.9325	-44.243	-1479.5	1476.5	1456.3
461	-2.9329	-45.435	-1500.5	1497.6	1476.8
462	-2.9333	-46.631	-1521.4	1518.5	1497.1
463	-2.9337	-47.828	-1542.1	1539.2	1517.2
464	-2.9341	-49.025	-1562.6	1559.6	1537.1
465	-2.9345	-50.220	-1582.8	1579.8	1556.7
466	-2.9349	-51.410	-1602.6	1599.7	1576.0
467	-2.9352	-52.594	-1622.1	1619.2	1594.9
468	-2.9356	-53.768	-1641.2	1638.3	1613.5
469	-2.9359	-54.931	-1659.8	1656.9	1631.5
470	-2.9363	-56.080	-1677.9	1675.0	1649.1
471	-2.9366	-57.213	-1695.5	1692.5	1666.0
472	-2.9369	-58.327	-1712.3	1709.4	1682.4
473	-2.9373	-59.419	-1728.6	1725.6	1698.1
474	-2.9375	-60.487	-1744.0	1741.1	1713.0
475	-2.9378	-61.528	-1758.7	1755.7	1727.2
476	-2.9381	-62.540	-1772.5	1769.6	1740.5
477	-2.9383	-63.518	-1785.4	1782.4	1752.9
478	-2.9386	-64.461	-1797.3	1794.3	1764.4
479	-2.9388	-65.366	-1808.1	1805.2	1774.8
480	-2.9390	-66.229	-1817.9	1814.9	1784.1
481	-2.9391	-67.048	-1826.4	1823.5	1792.3
482	-2.9393	-67.819	-1833.7	1830.8	1799.2
483	-2.9394	-68.539	-1839.7	1836.8	1804.9
484	-2.9395	-69.206	-1844.3	1841.4	1809.1
485	-2.9395	-69.815	-1847.4	1844.5	1812.0
486	-2.9395	-70.364	-1849.1	1846.1	1813.3
487	-2.9395	-70.850	-1849.1	1846.1	1813.1
488	-2.9395	-71.268	-1847.4	1844.5	1811.3
489	-2.9395	-71.616	-1844.0	1841.0	1807.7
490	-2.9394	-71.891	-1838.7	1835.8	1802.3
491	-2.9392	-72.088	-1831.5	1828.6	1795.0
492	-2.9390	-72.204	-1822.4	1819.5	1785.8
493	-2.9388	-72.235	-1811.2	1808.2	1774.6
494	-2.9386	-72.179	-1797.8	1794.9	1761.3

1

```
***** ANSYS - ENGINEERING ANALYSIS SYSTEM  RELEASE 5.7.1   *****
ANSYS/Mechanical U
00251976          VERSION=INTEL NT      11:31:45  DEC 23, 2005 CP=   1164.516

 Point Beach Strainer Inner Rim Plate Analysis


 ***** POST1 NODAL STRESS LISTING *****

 LOAD STEP=     4  SUBSTEP=    15
  TIME=    4.0000      LOAD CASE=   0
 SHELL NODAL RESULTS ARE AT BOTTOM
```

NODE	S1	S2	S3	SINT	SEQV
495	-2.9383	-72.030	-1782.2	1779.3	1745.8
496	-2.9379	-71.784	-1764.3	1761.4	1728.0
497	-2.9375	-71.438	-1744.0	1741.1	1707.9
498	-2.9371	-70.987	-1721.3	1718.3	1685.3
499	-2.9366	-70.425	-1696.0	1693.0	1660.3
500	-2.9361	-69.746	-1668.0	1665.1	1632.7
501	-2.9355	-68.946	-1637.3	1634.4	1602.4
502	-2.9349	-68.018	-1603.8	1600.9	1569.3
503	-2.9342	-66.953	-1567.4	1564.4	1533.4
504	-2.9334	-65.743	-1528.0	1525.0	1494.6
505	-2.9326	-64.379	-1485.5	1482.6	1452.8
506	-2.9318	-62.848	-1439.9	1436.9	1407.9
507	-2.9308	-61.139	-1390.9	1388.0	1359.8
508	-2.9298	-59.235	-1338.7	1335.8	1308.5
509	-2.9288	-57.117	-1283.0	1280.1	1253.8
510	-2.9276	-54.763	-1223.7	1220.8	1195.7
511	-2.9264	-52.144	-1160.9	1157.9	1134.1
512	-2.9252	-49.225	-1094.2	1091.3	1068.9
513	-2.9238	-45.959	-1023.8	1020.9	1000.1
514	-2.9224	-42.284	-949.40	946.48	927.43
515	-2.9209	-38.118	-870.96	868.04	850.98
516	-2.9193	-33.348	-788.36	785.44	770.67
517	-2.9177	-27.819	-701.48	698.56	686.45
518	-2.9160	-21.324	-610.22	607.30	598.31
519	-2.9141	-13.592	-514.43	511.51	506.26
520	-2.9122	-4.2601	-413.91	411.00	410.32
521	7.0361	-2.9102	-308.54	315.57	310.72
522	21.212	-2.9081	-198.21	219.42	208.41
523	-2.9246	-19.745	-1063.5	1060.6	1052.3
524	-2.9249	-20.467	-1081.2	1078.3	1069.6
525	-2.9253	-21.210	-1099.2	1096.3	1087.3
526	-2.9256	-21.975	-1117.6	1114.7	1105.3
527	-2.9260	-22.762	-1136.3	1133.4	1123.6
528	-2.9263	-23.571	-1155.3	1152.3	1142.2
529	-2.9267	-24.401	-1174.6	1171.6	1161.0
530	-2.9271	-25.253	-1194.1	1191.2	1180.2
531	-2.9275	-26.126	-1214.0	1211.1	1199.6
532	-2.9278	-27.019	-1234.1	1231.2	1219.3

1

```
***** ANSYS - ENGINEERING ANALYSIS SYSTEM  RELEASE 5.7.1   *****
ANSYS/Mechanical U
00251976          VERSION=INTEL NT      11:31:46  DEC 23, 2005 CP=   1164.547

 Point Beach Strainer Inner Rim Plate Analysis


 ***** POST1 NODAL STRESS LISTING *****

 LOAD STEP=     4  SUBSTEP=    15
  TIME=    4.0000      LOAD CASE=   0
 SHELL NODAL RESULTS ARE AT BOTTOM
```

NODE	S1	S2	S3	SINT	SEQV
533	-2.9282	-27.932	-1254.5	1251.5	1239.2
534	-2.9286	-28.865	-1275.0	1272.1	1259.4
535	-2.9290	-29.815	-1295.8	1292.9	1279.7
536	-2.9294	-30.782	-1316.8	1313.8	1300.1
537	-2.9298	-31.766	-1337.9	1334.9	1320.8
538	-2.9302	-32.765	-1359.1	1356.2	1341.5
539	-2.9306	-33.779	-1380.4	1377.5	1362.3
540	-2.9310	-34.805	-1401.8	1398.9	1383.2
541	-2.9314	-35.842	-1423.2	1420.3	1404.1
542	-2.9318	-36.890	-1444.6	1441.7	1425.0
543	-2.9323	-37.947	-1466.0	1463.1	1445.9
544	-2.9327	-39.010	-1487.3	1484.4	1466.7
545	-2.9331	-40.080	-1508.5	1505.6	1487.4
546	-2.9335	-41.153	-1529.6	1526.7	1507.9
547	-2.9339	-42.229	-1550.5	1547.5	1528.3
548	-2.9343	-43.306	-1571.1	1568.2	1548.4
549	-2.9346	-44.381	-1591.4	1588.5	1568.2
550	-2.9350	-45.453	-1611.5	1608.5	1587.7
551	-2.9354	-46.520	-1631.1	1628.2	1606.8
552	-2.9358	-47.579	-1650.4	1647.4	1625.6
553	-2.9361	-48.630	-1669.1	1666.2	1643.8
554	-2.9365	-49.669	-1687.3	1684.4	1661.5
555	-2.9368	-50.694	-1705.0	1702.1	1678.7
556	-2.9371	-51.703	-1722.0	1719.1	1695.2
557	-2.9374	-52.695	-1738.4	1735.4	1711.1
558	-2.9377	-53.665	-1753.9	1751.0	1726.2
559	-2.9380	-54.613	-1768.7	1765.8	1740.5
560	-2.9383	-55.535	-1782.6	1779.7	1754.0
561	-2.9385	-56.429	-1795.6	1792.7	1766.5
562	-2.9388	-57.293	-1807.6	1804.7	1778.1
563	-2.9390	-58.123	-1818.5	1815.6	1788.6
564	-2.9392	-58.918	-1828.3	1825.4	1798.0
565	-2.9393	-59.673	-1836.9	1834.0	1806.3
566	-2.9395	-60.388	-1844.3	1841.4	1813.3
567	-2.9396	-61.058	-1850.3	1847.4	1819.0
568	-2.9397	-61.681	-1854.9	1852.0	1823.3
569	-2.9397	-62.254	-1858.1	1855.2	1826.2
570	-2.9398	-62.774	-1859.7	1856.8	1827.6

1

```
***** ANSYS - ENGINEERING ANALYSIS SYSTEM  RELEASE 5.7.1   ******
ANSYS/Mechanical U
00251976          VERSION=INTEL NT      11:31:46  DEC 23, 2005 CP=   1164.563

 Point Beach Strainer Inner Rim Plate Analysis


 ***** POST1 NODAL STRESS LISTING *****

 LOAD STEP=     4  SUBSTEP=    15
  TIME=    4.0000      LOAD CASE=   0
 SHELL NODAL RESULTS ARE AT BOTTOM
```

NODE	S1	S2	S3	SINT	SEQV
571	-2.9398	-63.238	-1859.7	1856.8	1827.4
572	-2.9397	-63.643	-1858.0	1855.1	1825.5
573	-2.9397	-63.985	-1854.5	1851.6	1821.9
574	-2.9396	-64.263	-1849.2	1846.3	1816.4
575	-2.9394	-64.471	-1842.0	1839.1	1809.1
576	-2.9392	-64.608	-1832.8	1829.8	1799.8
577	-2.9390	-64.668	-1821.5	1818.5	1788.5
578	-2.9388	-64.650	-1808.0	1805.0	1775.0
579	-2.9385	-64.549	-1792.3	1789.3	1759.3
580	-2.9381	-64.361	-1774.2	1771.3	1741.4
581	-2.9377	-64.083	-1753.8	1750.8	1721.1
582	-2.9373	-63.709	-1730.8	1727.9	1698.3
583	-2.9368	-63.235	-1705.3	1702.3	1673.0
584	-2.9363	-62.657	-1677.1	1674.2	1645.1
585	-2.9357	-61.968	-1646.2	1643.2	1614.5
586	-2.9350	-61.164	-1612.4	1609.5	1581.1
587	-2.9343	-60.236	-1575.7	1572.8	1544.9
588	-2.9336	-59.180	-1536.0	1533.1	1505.7
589	-2.9328	-57.985	-1493.2	1490.3	1463.5
590	-2.9319	-56.643	-1447.2	1444.3	1418.2
591	-2.9310	-55.144	-1397.9	1395.0	1369.7
592	-2.9300	-53.475	-1345.3	1342.4	1317.8
593	-2.9289	-51.622	-1289.2	1286.3	1262.6
594	-2.9277	-49.567	-1229.5	1226.6	1204.0
595	-2.9265	-47.289	-1166.2	1163.3	1141.8
596	-2.9253	-44.759	-1099.1	1096.2	1075.9
597	-2.9239	-41.939	-1028.2	1025.3	1006.3
598	-2.9225	-38.777	-953.25	950.33	932.92
599	-2.9210	-35.197	-874.24	871.32	855.64
600	-2.9194	-31.086	-791.03	788.11	774.41
601	-2.9177	-26.275	-703.51	700.60	689.21
602	-2.9160	-20.512	-611.63	608.71	600.11
603	-2.9141	-13.421	-515.31	512.40	507.22
604	-2.9122	-4.5131	-414.55	411.64	410.84
605	6.8984	-2.9102	-309.06	315.96	311.17
606	20.800	-2.9081	-198.89	219.69	208.85
607	-2.9249	-12.308	-1077.7	1074.8	1070.1
608	-2.9252	-12.779	-1095.8	1092.9	1088.0

1

```
***** ANSYS - ENGINEERING ANALYSIS SYSTEM  RELEASE 5.7.1   *****
ANSYS/Mechanical U
00251976          VERSION=INTEL NT      11:31:46  DEC 23, 2005 CP=   1164.563

 Point Beach Strainer Inner Rim Plate Analysis


 ***** POST1 NODAL STRESS LISTING *****

 LOAD STEP=     4  SUBSTEP=    15
  TIME=    4.0000      LOAD CASE=   0
 SHELL NODAL RESULTS ARE AT BOTTOM
```

NODE	S1	S2	S3	SINT	SEQV
609	-2.9256	-13.267	-1114.3	1111.4	1106.2
610	-2.9259	-13.770	-1133.1	1130.2	1124.8
611	-2.9263	-14.290	-1152.2	1149.3	1143.7
612	-2.9267	-14.826	-1171.7	1168.8	1162.9
613	-2.9270	-15.378	-1191.5	1188.6	1182.4
614	-2.9274	-15.945	-1211.5	1208.6	1202.2
615	-2.9278	-16.529	-1231.9	1229.0	1222.2
616	-2.9282	-17.128	-1252.5	1249.6	1242.5
617	-2.9286	-17.742	-1273.4	1270.4	1263.1
618	-2.9290	-18.370	-1294.4	1291.5	1283.9
619	-2.9294	-19.012	-1315.7	1312.8	1304.8
620	-2.9298	-19.668	-1337.2	1334.3	1326.0
621	-2.9302	-20.336	-1358.8	1355.9	1347.3
622	-2.9306	-21.016	-1380.6	1377.6	1368.7
623	-2.9310	-21.708	-1402.4	1399.5	1390.2
624	-2.9315	-22.410	-1424.3	1421.4	1411.7
625	-2.9319	-23.122	-1446.3	1443.3	1433.3
626	-2.9323	-23.843	-1468.2	1465.3	1454.9
627	-2.9327	-24.571	-1490.1	1487.2	1476.5
628	-2.9331	-25.306	-1511.9	1509.0	1497.9
629	-2.9335	-26.047	-1533.7	1530.7	1519.3
630	-2.9340	-26.793	-1555.2	1552.3	1540.5
631	-2.9344	-27.542	-1576.6	1573.7	1561.5
632	-2.9348	-28.294	-1597.7	1594.8	1582.3
633	-2.9352	-29.047	-1618.6	1615.6	1602.7
634	-2.9355	-29.800	-1639.1	1636.1	1622.9
635	-2.9359	-30.551	-1659.2	1656.3	1642.6
636	-2.9363	-31.300	-1678.9	1676.0	1662.0
637	-2.9367	-32.045	-1698.1	1695.2	1680.8
638	-2.9370	-32.784	-1716.8	1713.8	1699.1
639	-2.9374	-33.516	-1734.8	1731.9	1716.8
640	-2.9377	-34.240	-1752.3	1749.3	1733.9
641	-2.9380	-34.954	-1769.0	1766.0	1750.3
642	-2.9383	-35.656	-1784.9	1782.0	1765.9
643	-2.9386	-36.346	-1800.1	1797.1	1780.7
644	-2.9389	-37.020	-1814.3	1811.4	1794.6
645	-2.9391	-37.677	-1827.6	1824.6	1807.5
646	-2.9394	-38.317	-1839.8	1836.9	1819.5

1

```
***** ANSYS - ENGINEERING ANALYSIS SYSTEM  RELEASE 5.7.1   *****
ANSYS/Mechanical U
00251976          VERSION=INTEL NT      11:31:46  DEC 23, 2005 CP=   1164.563

 Point Beach Strainer Inner Rim Plate Analysis


 ***** POST1 NODAL STRESS LISTING *****

 LOAD STEP=     4  SUBSTEP=    15
  TIME=    4.0000      LOAD CASE=   0
 SHELL NODAL RESULTS ARE AT BOTTOM
```

NODE	S1	S2	S3	SINT	SEQV
647	-2.9396	-38.936	-1851.0	1848.1	1830.3
648	-2.9398	-39.533	-1861.0	1858.1	1840.1
649	-2.9399	-40.107	-1869.8	1866.9	1848.6
650	-2.9401	-40.655	-1877.3	1874.4	1855.8
651	-2.9402	-41.175	-1883.5	1880.6	1861.7
652	-2.9403	-41.666	-1888.2	1885.3	1866.2
653	-2.9404	-42.125	-1891.4	1888.5	1869.2
654	-2.9404	-42.551	-1893.1	1890.1	1870.6
655	-2.9404	-42.940	-1893.0	1890.1	1870.4
656	-2.9404	-43.292	-1891.3	1888.3	1868.5
657	-2.9403	-43.603	-1887.7	1884.8	1864.8
658	-2.9402	-43.872	-1882.2	1879.3	1859.2
659	-2.9400	-44.096	-1874.8	1871.9	1851.6
660	-2.9399	-44.272	-1865.3	1862.4	1842.0
661	-2.9396	-44.397	-1853.7	1850.7	1830.4
662	-2.9394	-44.470	-1839.9	1836.9	1816.5
663	-2.9391	-44.487	-1823.7	1820.8	1800.4
664	-2.9387	-44.445	-1805.2	1802.3	1781.9
665	-2.9383	-44.341	-1784.2	1781.3	1761.0
666	-2.9379	-44.171	-1760.7	1757.8	1737.5
667	-2.9374	-43.932	-1734.6	1731.6	1711.5
668	-2.9368	-43.620	-1705.7	1702.7	1682.8
669	-2.9362	-43.230	-1674.0	1671.0	1651.3
670	-2.9356	-42.757	-1639.4	1636.4	1616.9
671	-2.9348	-42.197	-1601.8	1598.9	1579.6
672	-2.9341	-41.544	-1561.2	1558.2	1539.3
673	-2.9332	-40.790	-1517.3	1514.4	1495.8
674	-2.9323	-39.929	-1470.3	1467.3	1449.2
675	-2.9314	-38.951	-1419.9	1416.9	1399.3
676	-2.9303	-37.847	-1366.0	1363.1	1346.0
677	-2.9292	-36.605	-1308.7	1305.7	1289.2
678	-2.9281	-35.209	-1247.7	1244.8	1228.9
679	-2.9268	-33.643	-1183.0	1180.1	1165.0
680	-2.9255	-31.881	-1114.5	1111.6	1097.4
681	-2.9242	-29.892	-1042.1	1039.2	1026.0
682	-2.9227	-27.630	-965.74	962.82	950.71
683	-2.9211	-25.030	-885.23	882.31	871.46
684	-2.9195	-21.993	-800.50	797.58	788.21

1

```
***** ANSYS - ENGINEERING ANALYSIS SYSTEM  RELEASE 5.7.1   *****
ANSYS/Mechanical U
00251976          VERSION=INTEL NT      11:31:46  DEC 23, 2005 CP=   1164.563

Point Beach Strainer Inner Rim Plate Analysis


 ***** POST1 NODAL STRESS LISTING *****

 LOAD STEP=     4  SUBSTEP=    15
  TIME=    4.0000      LOAD CASE=   0
 SHELL NODAL RESULTS ARE AT BOTTOM
```

NODE	S1	S2	S3	SINT	SEQV
685	-2.9178	-18.363	-711.45	708.53	700.94
686	-2.9160	-13.894	-618.03	615.12	609.70
687	-2.9141	-8.1965	-520.29	517.38	514.76
688	-0.62132	-2.9122	-418.47	417.85	416.71
689	9.7407	-2.9102	-313.29	323.04	316.90
690	24.940	-2.9080	-204.50	229.44	216.86
691	-2.9253	-3.8539	-1102.9	1100.0	1099.5
692	-2.9257	-4.0288	-1121.9	1118.9	1118.4
693	-2.9261	-4.2114	-1141.1	1138.2	1137.6
694	-2.9264	-4.4021	-1160.8	1157.8	1157.1
695	-2.9268	-4.6010	-1180.7	1177.8	1177.0
696	-2.9272	-4.8082	-1201.1	1198.1	1197.2
697	-2.9276	-5.0237	-1221.7	1218.8	1217.7
698	-2.9280	-5.2475	-1242.6	1239.7	1238.5
699	-2.9284	-5.4796	-1263.9	1260.9	1259.7
700	-2.9288	-5.7199	-1285.4	1282.4	1281.0
701	-2.9292	-5.9682	-1307.1	1304.2	1302.7
702	-2.9296	-6.2244	-1329.1	1326.2	1324.5
703	-2.9301	-6.4884	-1351.3	1348.4	1346.6
704	-2.9305	-6.7600	-1373.7	1370.8	1368.9
705	-2.9309	-7.0389	-1396.3	1393.3	1391.3
706	-2.9314	-7.3250	-1418.9	1416.0	1413.8
707	-2.9318	-7.6178	-1441.7	1438.8	1436.5
708	-2.9322	-7.9172	-1464.6	1461.6	1459.2
709	-2.9327	-8.2228	-1487.5	1484.5	1481.9
710	-2.9331	-8.5344	-1510.3	1507.4	1504.6
711	-2.9335	-8.8514	-1533.2	1530.3	1527.3
712	-2.9340	-9.1736	-1556.0	1553.0	1549.9
713	-2.9344	-9.5006	-1578.6	1575.7	1572.4
714	-2.9348	-9.8319	-1601.1	1598.2	1594.7
715	-2.9352	-10.167	-1623.4	1620.4	1616.8
716	-2.9357	-10.506	-1645.4	1642.5	1638.7
717	-2.9361	-10.847	-1667.1	1664.2	1660.3
718	-2.9365	-11.191	-1688.5	1685.6	1681.5
719	-2.9369	-11.537	-1709.5	1706.6	1702.3
720	-2.9373	-11.884	-1730.0	1727.1	1722.6
721	-2.9377	-12.232	-1750.1	1747.1	1742.5
722	-2.9380	-12.581	-1769.5	1766.6	1761.8

1

```
***** ANSYS - ENGINEERING ANALYSIS SYSTEM  RELEASE 5.7.1   *****
ANSYS/Mechanical U
00251976          VERSION=INTEL NT      11:31:46  DEC 23, 2005 CP=   1164.578

 Point Beach Strainer Inner Rim Plate Analysis


 ***** POST1 NODAL STRESS LISTING *****

 LOAD STEP=     4  SUBSTEP=    15
  TIME=    4.0000      LOAD CASE=   0
 SHELL NODAL RESULTS ARE AT BOTTOM
```

NODE	S1	S2	S3	SINT	SEQV
723	-2.9384	-12.928	-1788.4	1785.4	1780.4
724	-2.9387	-13.275	-1806.5	1803.6	1798.4
725	-2.9391	-13.620	-1823.9	1821.0	1815.7
726	-2.9394	-13.963	-1840.6	1837.6	1832.1
727	-2.9397	-14.303	-1856.3	1853.4	1847.7
728	-2.9400	-14.638	-1871.1	1868.2	1862.4
729	-2.9402	-14.970	-1885.0	1882.0	1876.0
730	-2.9405	-15.296	-1897.7	1894.8	1888.7
731	-2.9407	-15.616	-1909.4	1906.4	1900.1
732	-2.9409	-15.929	-1919.8	1916.9	1910.4
733	-2.9411	-16.234	-1929.0	1926.0	1919.4
734	-2.9412	-16.531	-1936.8	1933.8	1927.1
735	-2.9413	-16.818	-1943.2	1940.2	1933.3
736	-2.9414	-17.094	-1948.1	1945.1	1938.1
737	-2.9415	-17.359	-1951.4	1948.5	1941.3
738	-2.9415	-17.611	-1953.1	1950.1	1942.8
739	-2.9415	-17.850	-1953.0	1950.1	1942.7
740	-2.9415	-18.073	-1951.2	1948.2	1940.7
741	-2.9414	-18.281	-1947.4	1944.5	1936.8
742	-2.9413	-18.471	-1941.7	1938.7	1931.0
743	-2.9412	-18.642	-1933.9	1931.0	1923.2
744	-2.9410	-18.793	-1924.0	1921.0	1913.2
745	-2.9407	-18.921	-1911.9	1908.9	1901.0
746	-2.9405	-19.026	-1897.4	1894.5	1886.5
747	-2.9401	-19.105	-1880.6	1877.6	1869.6
748	-2.9398	-19.156	-1861.3	1858.3	1850.3
749	-2.9394	-19.177	-1839.4	1836.4	1828.4
750	-2.9389	-19.166	-1814.8	1811.9	1803.8
751	-2.9384	-19.119	-1787.6	1784.6	1776.6
752	-2.9378	-19.033	-1757.4	1754.5	1746.5
753	-2.9372	-18.906	-1724.4	1721.5	1713.5
754	-2.9365	-18.732	-1688.4	1685.4	1677.6
755	-2.9357	-18.508	-1649.2	1646.3	1638.6
756	-2.9349	-18.229	-1606.9	1604.0	1596.4
757	-2.9340	-17.888	-1561.3	1558.4	1550.9
758	-2.9331	-17.478	-1512.3	1509.4	1502.2
759	-2.9321	-16.992	-1459.9	1457.0	1450.0
760	-2.9310	-16.419	-1404.0	1401.0	1394.3

1

```
***** ANSYS - ENGINEERING ANALYSIS SYSTEM  RELEASE 5.7.1   *****
ANSYS/Mechanical U
00251976          VERSION=INTEL NT      11:31:46  DEC 23, 2005 CP=   1164.594

 Point Beach Strainer Inner Rim Plate Analysis


 ***** POST1 NODAL STRESS LISTING *****

 LOAD STEP=     4  SUBSTEP=    15
  TIME=    4.0000      LOAD CASE=   0
 SHELL NODAL RESULTS ARE AT BOTTOM
```

NODE	S1	S2	S3	SINT	SEQV
761	-2.9299	-15.747	-1344.4	1341.5	1335.1
762	-2.9287	-14.960	-1281.1	1278.2	1272.2
763	-2.9274	-14.040	-1214.0	1211.1	1205.6
764	-2.9260	-12.961	-1143.1	1140.2	1135.2
765	-2.9246	-11.690	-1068.2	1065.3	1060.9
766	-2.9231	-10.180	-989.30	986.38	982.77
767	-2.9215	-8.3663	-906.30	903.38	900.67
768	-2.9198	-6.1521	-819.13	816.21	814.60
769	-2.9179	-3.3915	-727.72	724.80	724.57
770	0.14668	-2.9162	-632.00	632.15	630.62
771	4.8481	-2.9142	-531.95	536.80	532.96
772	11.368	-2.9122	-427.77	439.14	432.17
773	20.996	-2.9100	-320.45	341.45	330.15
774	35.716	-2.9079	-214.82	250.54	233.63
775	-0.56136	-2.9295	-1321.3	1320.7	1319.5
776	103.78	-2.9050	-137.45	241.23	209.37
777	185.67	-2.9024	-80.106	265.78	236.81
778	279.47	-2.9000	-49.218	328.68	308.15
779	376.53	-2.8979	-32.132	408.66	394.86
780	472.95	-2.8959	-21.467	494.42	485.40
781	566.73	-2.8939	-14.376	581.11	575.45
782	656.90	-2.8921	-9.3632	666.26	663.05
783	742.92	-2.8904	-5.6782	748.60	747.21
784	824.50	-2.8776	-2.8953	827.40	827.39
785	901.49	-0.71865	-2.8874	904.38	903.30
786	973.82	0.98702	-2.8860	976.71	974.78
787	1041.5	2.3456	-2.8846	1044.4	1041.8
788	1104.5	3.4357	-2.8834	1107.4	1104.2
789	1162.9	4.3132	-2.8823	1165.7	1162.2
790	1216.7	5.0196	-2.8812	1219.6	1215.6
791	1266.0	5.5858	-2.8803	1268.9	1264.7
792	1310.9	6.0359	-2.8794	1313.8	1309.4
793	1351.5	6.3885	-2.8786	1354.4	1349.8
794	1387.9	6.6585	-2.8779	1390.8	1386.0
795	1420.1	6.8577	-2.8773	1423.0	1418.1
796	1448.3	6.9960	-2.8768	1451.2	1446.2
797	1472.5	7.0814	-2.8763	1475.4	1470.4
798	1492.9	7.1205	-2.8759	1495.7	1490.8

1

```
***** ANSYS - ENGINEERING ANALYSIS SYSTEM  RELEASE 5.7.1   *****
ANSYS/Mechanical U
00251976          VERSION=INTEL NT      11:31:46  DEC 23, 2005 CP=   1164.625

 Point Beach Strainer Inner Rim Plate Analysis

 ***** POST1 NODAL STRESS LISTING *****

 LOAD STEP=     4  SUBSTEP=    15
  TIME=    4.0000      LOAD CASE=   0
 SHELL NODAL RESULTS ARE AT BOTTOM
```

NODE	S1	S2	S3	SINT	SEQV
799	1509.5	7.1191	-2.8756	1512.3	1507.4
800	1522.4	7.0818	-2.8754	1525.3	1520.4
801	1531.8	7.0127	-2.8752	1534.7	1529.8
802	1537.8	6.9152	-2.8751	1540.7	1535.8
803	1540.4	6.7922	-2.8750	1543.3	1538.5
804	1539.8	6.6463	-2.8750	1542.6	1537.9
805	1536.0	6.4798	-2.8751	1538.9	1534.2
806	1529.2	6.2944	-2.8752	1532.0	1527.5
807	1519.4	6.0917	-2.8754	1522.3	1517.8
808	1506.8	5.8732	-2.8757	1509.7	1505.3
809	1491.4	5.6400	-2.8760	1494.3	1490.1
810	1473.5	5.3930	-2.8763	1476.3	1472.2
811	1452.9	5.1332	-2.8767	1455.8	1451.8
812	1430.0	4.8611	-2.8771	1432.9	1429.0
813	1404.7	4.5771	-2.8776	1407.6	1403.8
814	1377.1	4.2818	-2.8781	1380.0	1376.4
815	1347.4	3.9751	-2.8787	1350.3	1346.9
816	1315.7	3.6573	-2.8793	1318.6	1315.3
817	1282.0	3.3281	-2.8800	1284.9	1281.8
818	1246.5	2.9872	-2.8806	1249.3	1246.4
819	1209.1	2.6342	-2.8814	1212.0	1209.3
820	1170.2	2.2684	-2.8821	1173.0	1170.5
821	1129.6	1.8887	-2.8829	1132.5	1130.1
822	1087.5	1.4940	-2.8837	1090.4	1088.2
823	1044.1	1.0825	-2.8845	1046.9	1045.0
824	999.29	0.65233	-2.8854	1002.2	1000.4
825	953.30	0.20069	-2.8863	956.19	954.65
826	906.18	-0.27574	-2.8872	909.07	907.76
827	858.01	-0.78125	-2.8881	860.90	859.85
828	808.89	-1.3213	-2.8890	811.78	810.99
829	758.89	-1.9031	-2.8900	761.78	761.29
830	708.12	-2.5361	-2.8910	711.01	710.83
831	656.66	-2.8919	-3.2327	659.89	659.72
832	604.60	-2.8929	-4.0099	608.61	608.05
833	552.04	-2.8940	-4.8915	556.93	555.94
834	499.10	-2.8950	-5.9110	505.01	503.51
835	445.88	-2.8960	-7.1180	453.00	450.90
836	392.54	-2.8971	-8.5878	401.13	398.32

1

```
***** ANSYS - ENGINEERING ANALYSIS SYSTEM  RELEASE 5.7.1   *****
ANSYS/Mechanical U
00251976          VERSION=INTEL NT      11:31:46  DEC 23, 2005 CP=   1164.641

 Point Beach Strainer Inner Rim Plate Analysis


 ***** POST1 NODAL STRESS LISTING *****

 LOAD STEP=     4  SUBSTEP=    15
  TIME=    4.0000      LOAD CASE=   0
 SHELL NODAL RESULTS ARE AT BOTTOM
```

NODE	S1	S2	S3	SINT	SEQV
837	339.27	-2.8981	-10.440	349.71	346.00
838	286.33	-2.8992	-12.877	299.21	294.35
839	234.15	-2.9002	-16.255	250.41	244.00
840	183.47	-2.9013	-21.255	204.73	196.19
841	135.72	-2.9023	-29.241	164.96	153.49
842	93.606	-2.9034	-42.868	136.47	121.52
843	61.087	-2.9044	-66.025	127.11	110.08
844	40.077	-2.9055	-100.57	140.65	124.84
845	27.868	-2.9066	-143.75	171.62	158.49
846	20.657	-2.9076	-191.70	212.36	201.61
847	16.088	-2.9086	-242.02	258.11	249.15
848	12.975	-2.9097	-293.46	306.44	298.81
849	10.723	-2.9107	-345.39	356.12	349.50
850	9.0124	-2.9117	-397.45	406.46	400.63
851	7.6641	-2.9127	-449.40	457.06	451.86
852	6.5685	-2.9137	-501.09	507.66	502.99
853	5.6564	-2.9147	-552.42	558.08	553.84
854	4.8819	-2.9157	-603.31	608.19	604.33
855	4.2136	-2.9167	-653.68	657.89	654.36
856	3.6291	-2.9176	-703.48	707.11	703.85
857	3.1123	-2.9186	-752.65	755.77	752.77
858	2.6512	-2.9195	-801.17	803.82	801.05
859	2.2364	-2.9204	-848.98	851.22	848.65
860	1.8611	-2.9213	-896.06	897.92	895.54
861	1.5196	-2.9222	-942.38	943.90	941.68
862	1.2075	-2.9231	-987.90	989.11	987.05
863	0.92121	-2.9240	-1032.6	1033.5	1031.6
864	0.65772	-2.9248	-1076.5	1077.1	1075.4
865	0.41459	-2.9256	-1119.5	1119.9	1118.3
866	0.18970	-2.9264	-1161.7	1161.8	1160.3
867	-0.18759E-01	-2.9272	-1202.9	1202.9	1201.4
868	-0.21241	-2.9280	-1243.3	1243.1	1241.7
869	-0.39280	-2.9287	-1282.7	1282.4	1281.1
870	-0.56355	-2.9295	-1321.3	1320.7	1319.5
871	-2.9286	-7.7468	-1275.9	1273.0	1270.6
872	-2.9281	-20.167	-1246.8	1243.9	1235.4
873	-2.9278	-30.055	-1230.7	1227.8	1214.5
874	-2.9277	-33.752	-1225.6	1222.7	1207.5

1

```
***** ANSYS - ENGINEERING ANALYSIS SYSTEM  RELEASE 5.7.1   *****
ANSYS/Mechanical U
00251976          VERSION=INTEL NT      11:31:46  DEC 23, 2005 CP=   1164.656

 Point Beach Strainer Inner Rim Plate Analysis


 ***** POST1 NODAL STRESS LISTING *****

 LOAD STEP=     4  SUBSTEP=    15
  TIME=    4.0000      LOAD CASE=   0
 SHELL NODAL RESULTS ARE AT BOTTOM
```

NODE	S1	S2	S3	SINT	SEQV
875	-2.9278	-30.055	-1230.7	1227.8	1214.5
876	-2.9281	-20.168	-1246.8	1243.9	1235.4
877	-2.9286	-7.7486	-1275.9	1273.0	1270.6
878	-0.39209	-2.9287	-1282.7	1282.3	1281.1
879	-0.20980	-2.9280	-1243.3	1243.1	1241.7
880	-0.15049E-01	-2.9272	-1202.9	1202.9	1201.4
881	0.19383	-2.9264	-1161.6	1161.8	1160.3
882	0.41863	-2.9256	-1119.5	1119.9	1118.2
883	0.66134	-2.9248	-1076.5	1077.1	1075.3
884	0.92418	-2.9240	-1032.6	1033.5	1031.6
885	1.2097	-2.9231	-987.89	989.10	987.04
886	1.5210	-2.9222	-942.37	943.89	941.67
887	1.8618	-2.9213	-896.05	897.91	895.53
888	2.2364	-2.9204	-848.97	851.21	848.64
889	2.6505	-2.9195	-801.16	803.81	801.04
890	3.1112	-2.9186	-752.65	755.76	752.76
891	3.6277	-2.9176	-703.47	707.10	703.85
892	4.2119	-2.9167	-653.67	657.88	654.35
893	4.8802	-2.9157	-603.30	608.18	604.32
894	5.6547	-2.9147	-552.42	558.07	553.84
895	6.5670	-2.9137	-501.09	507.66	502.98
896	7.6629	-2.9127	-449.39	457.06	451.86
897	9.0116	-2.9117	-397.45	406.46	400.63
898	10.722	-2.9107	-345.39	356.12	349.50
899	12.975	-2.9097	-293.46	306.44	298.81
900	16.089	-2.9086	-242.02	258.11	249.15
901	20.659	-2.9076	-191.71	212.37	201.62
902	27.871	-2.9066	-143.76	171.63	158.50
903	40.081	-2.9055	-100.58	140.66	124.85
904	61.091	-2.9044	-66.031	127.12	110.09
905	93.611	-2.9034	-42.874	136.48	121.53
906	135.72	-2.9023	-29.245	164.96	153.50
907	183.47	-2.9013	-21.259	204.73	196.20
908	234.15	-2.9002	-16.258	250.41	244.00
909	286.33	-2.8992	-12.879	299.21	294.35
910	339.27	-2.8981	-10.442	349.71	346.00
911	392.54	-2.8971	-8.5897	401.13	398.31
912	445.88	-2.8960	-7.1201	453.00	450.90

1

***** ANSYS - ENGINEERING ANALYSIS SYSTEM RELEASE 5.7.1 *****
ANSYS/Mechanical U
00251976 VERSION=INTEL NT 11:31:46 DEC 23, 2005 CP= 1164.656

Point Beach Strainer Inner Rim Plate Analysis

***** POST1 NODAL STRESS LISTING *****

LOAD STEP= 4 SUBSTEP= 15
TIME= 4.0000 LOAD CASE= 0
SHELL NODAL RESULTS ARE AT BOTTOM

NODE	S1	S2	S3	SINT	SEQV
913	499.09	-2.8950	-5.9135	505.00	503.50
914	552.04	-2.8940	-4.8946	556.93	555.93
915	604.59	-2.8929	-4.0139	608.61	608.05
916	656.65	-2.8919	-3.2378	659.89	659.71
917	708.11	-2.5425	-2.8910	711.00	710.83
918	758.88	-1.9113	-2.8900	761.77	761.28
919	808.87	-1.3315	-2.8890	811.76	810.99
920	858.00	-0.79378	-2.8881	860.89	859.84
921	906.16	-0.29097	-2.8872	909.05	907.76
922	953.29	0.18243	-2.8863	956.17	954.64
923	999.28	0.63069	-2.8854	1002.2	1000.4
924	1044.0	1.0572	-2.8845	1046.9	1045.0
925	1087.5	1.4646	-2.8837	1090.4	1088.2
926	1129.6	1.8551	-2.8829	1132.5	1130.1
927	1170.1	2.2304	-2.8821	1173.0	1170.5
928	1209.1	2.5917	-2.8814	1212.0	1209.3
929	1246.5	2.9403	-2.8806	1249.3	1246.4
930	1282.0	3.2769	-2.8800	1284.9	1281.8
931	1315.7	3.6022	-2.8793	1318.6	1315.4
932	1347.5	3.9168	-2.8787	1350.3	1347.0
933	1377.2	4.2210	-2.8781	1380.0	1376.5
934	1404.7	4.5151	-2.8776	1407.6	1403.9
935	1430.0	4.7993	-2.8771	1432.9	1429.1
936	1453.0	5.0737	-2.8767	1455.9	1451.9
937	1473.5	5.3382	-2.8763	1476.4	1472.3
938	1491.5	5.5926	-2.8760	1494.4	1490.2
939	1506.9	5.8367	-2.8757	1509.8	1505.4
940	1519.5	6.0700	-2.8754	1522.4	1518.0
941	1529.3	6.2919	-2.8752	1532.2	1527.6
942	1536.2	6.5015	-2.8751	1539.1	1534.4
943	1540.0	6.6977	-2.8750	1542.9	1538.1
944	1540.7	6.8789	-2.8750	1543.5	1538.7
945	1538.1	7.0433	-2.8751	1541.0	1536.0
946	1532.2	7.1882	-2.8752	1535.0	1530.0
947	1522.8	7.3105	-2.8754	1525.7	1520.6
948	1509.8	7.4060	-2.8756	1512.7	1507.6
949	1493.2	7.4695	-2.8759	1496.1	1491.0
950	1472.9	7.4944	-2.8763	1475.8	1470.6

1

```
***** ANSYS - ENGINEERING ANALYSIS SYSTEM  RELEASE 5.7.1   *****
ANSYS/Mechanical U
00251976          VERSION=INTEL NT      11:31:46  DEC 23, 2005 CP=   1164.688

 Point Beach Strainer Inner Rim Plate Analysis


 ***** POST1 NODAL STRESS LISTING *****

 LOAD STEP=     4  SUBSTEP=    15
  TIME=    4.0000      LOAD CASE=   0
 SHELL NODAL RESULTS ARE AT BOTTOM
```

NODE	S1	S2	S3	SINT	SEQV
951	1448.7	7.4724	-2.8768	1451.5	1446.4
952	1420.5	7.3928	-2.8773	1423.3	1418.2
953	1388.2	7.2424	-2.8779	1391.1	1386.0
954	1351.8	7.0045	-2.8786	1354.6	1349.7
955	1311.1	6.6581	-2.8794	1313.9	1309.2
956	1266.0	6.1768	-2.8803	1268.9	1264.4
957	1216.5	5.5271	-2.8812	1219.4	1215.2
958	1162.5	4.6669	-2.8823	1165.3	1161.6
959	1103.8	3.5424	-2.8834	1106.7	1103.5
960	1040.5	2.0854	-2.8847	1043.4	1040.9
961	972.47	0.20798	-2.8860	975.36	973.81
962	899.72	-2.2043	-2.8875	902.61	902.27
963	822.28	-2.8889	-5.3034	827.58	826.38
964	740.23	-2.8905	-9.2962	749.53	746.34
965	653.78	-2.8922	-14.479	668.26	662.54
966	563.33	-2.8940	-21.300	584.63	575.64
967	469.60	-2.8959	-30.497	500.10	486.88
968	374.03	-2.8980	-43.397	417.42	398.72
969	279.47	-2.9001	-62.597	342.07	316.47
970	191.69	-2.9023	-93.259	284.95	252.22
971	120.00	-2.9045	-143.61	263.61	228.47
972	65.207	-2.9053	-122.75	187.95	164.81
973	126.31	-2.9031	-64.964	191.28	169.02
974	209.52	-2.9011	-34.129	243.65	229.64
975	301.13	-2.8991	-16.880	318.01	311.26
976	393.50	-2.8971	-5.7947	399.29	397.85
977	483.60	2.0574	-2.8954	486.49	484.04
978	570.16	7.9298	-2.8937	573.06	567.72
979	652.62	12.448	-2.8921	655.52	647.98
980	730.70	15.975	-2.8906	733.59	724.35
981	804.28	18.746	-2.8891	807.17	796.57
982	873.31	20.928	-2.8878	876.19	864.53
983	937.79	22.643	-2.8866	940.68	928.18
984	997.77	23.986	-2.8854	1000.7	987.50
985	1053.3	25.030	-2.8843	1056.2	1042.5
986	1104.5	25.832	-2.8834	1107.3	1093.3
987	1151.3	26.437	-2.8825	1154.2	1139.8
988	1193.9	26.881	-2.8816	1196.8	1182.2

1

```
***** ANSYS - ENGINEERING ANALYSIS SYSTEM  RELEASE 5.7.1   *****
ANSYS/Mechanical U
00251976          VERSION=INTEL NT      11:31:46  DEC 23, 2005 CP=   1164.703

 Point Beach Strainer Inner Rim Plate Analysis


 ***** POST1 NODAL STRESS LISTING *****

 LOAD STEP=     4  SUBSTEP=    15
  TIME=    4.0000      LOAD CASE=   0
 SHELL NODAL RESULTS ARE AT BOTTOM
```

NODE	S1	S2	S3	SINT	SEQV
989	1232.4	27.193	-2.8809	1235.3	1220.5
990	1266.9	27.395	-2.8802	1269.8	1254.9
991	1297.4	27.505	-2.8797	1300.3	1285.4
992	1324.1	27.538	-2.8791	1327.0	1312.0
993	1347.0	27.504	-2.8787	1349.9	1334.9
994	1366.3	27.413	-2.8783	1369.2	1354.3
995	1382.0	27.272	-2.8780	1384.9	1370.1
996	1394.3	27.086	-2.8778	1397.1	1382.4
997	1403.2	26.862	-2.8776	1406.1	1391.4
998	1408.8	26.601	-2.8775	1411.7	1397.2
999	1411.3	26.307	-2.8775	1414.2	1399.9
1000	1410.8	25.983	-2.8775	1413.7	1399.4
1001	1407.3	25.630	-2.8776	1410.1	1396.1
1002	1400.9	25.250	-2.8777	1403.7	1389.9
1003	1391.7	24.844	-2.8779	1394.6	1380.9
1004	1379.9	24.414	-2.8781	1382.7	1369.3
1005	1365.4	23.961	-2.8784	1368.3	1355.1
1006	1348.5	23.484	-2.8787	1351.4	1338.4
1007	1329.3	22.986	-2.8790	1332.1	1319.4
1008	1307.7	22.467	-2.8795	1310.5	1298.1
1009	1283.9	21.928	-2.8799	1286.8	1274.5
1010	1258.0	21.368	-2.8804	1260.9	1248.9
1011	1230.1	20.789	-2.8809	1232.9	1221.3
1012	1200.2	20.192	-2.8815	1203.1	1191.7
1013	1168.5	19.576	-2.8821	1171.4	1160.3
1014	1135.1	18.941	-2.8827	1138.0	1127.2
1015	1100.0	18.289	-2.8834	1102.9	1092.4
1016	1063.3	17.620	-2.8841	1066.2	1056.1
1017	1025.1	16.933	-2.8848	1028.0	1018.2
1018	985.53	16.228	-2.8856	988.42	979.00
1019	944.63	15.505	-2.8864	947.52	938.46
1020	902.49	14.763	-2.8872	905.38	896.68
1021	859.20	14.002	-2.8880	862.08	853.76
1022	814.83	13.220	-2.8889	817.72	809.78
1023	769.47	12.414	-2.8897	772.35	764.82
1024	723.19	11.583	-2.8906	726.08	718.95
1025	676.09	10.722	-2.8915	678.98	672.27
1026	628.23	9.8253	-2.8924	631.12	624.86

1

```
***** ANSYS - ENGINEERING ANALYSIS SYSTEM  RELEASE 5.7.1   *****
ANSYS/Mechanical U
00251976          VERSION=INTEL NT      11:31:46  DEC 23, 2005 CP=   1164.703

 Point Beach Strainer Inner Rim Plate Analysis


 ***** POST1 NODAL STRESS LISTING *****

 LOAD STEP=     4  SUBSTEP=    15
  TIME=    4.0000      LOAD CASE=   0
 SHELL NODAL RESULTS ARE AT BOTTOM
```

NODE	S1	S2	S3	SINT	SEQV
1027	579.70	8.8856	-2.8934	582.60	576.80
1028	530.59	7.8916	-2.8943	533.49	528.18
1029	480.98	6.8274	-2.8953	483.88	479.09
1030	430.97	5.6689	-2.8962	433.87	429.65
1031	380.65	4.3791	-2.8972	383.55	379.97
1032	330.17	2.8979	-2.8982	333.07	330.21
1033	279.68	1.1224	-2.8992	282.57	280.59
1034	229.43	-1.1369	-2.9002	232.33	231.46
1035	179.88	-2.9010	-4.2638	184.15	183.47
1036	131.96	-2.9021	-9.1259	141.08	138.07
1037	87.881	-2.9031	-17.895	105.78	99.134
1038	52.688	-2.9041	-35.543	88.231	77.267
1039	31.400	-2.9051	-67.036	98.436	86.543
1040	20.807	-2.9061	-109.11	129.92	119.84
1041	15.192	-2.9071	-156.00	171.19	162.90
1042	11.743	-2.9081	-204.84	216.58	209.64
1043	9.3455	-2.9090	-254.47	263.81	257.91
1044	7.5239	-2.9100	-304.36	311.88	306.80
1045	6.0495	-2.9110	-354.24	360.29	355.90
1046	4.8009	-2.9119	-403.95	408.75	404.95
1047	3.7085	-2.9129	-453.37	457.08	453.81
1048	2.7298	-2.9138	-502.43	505.16	502.36
1049	1.8373	-2.9148	-551.05	552.89	550.53
1050	1.0129	-2.9157	-599.18	600.20	598.24
1051	0.24367	-2.9166	-646.78	647.03	645.45
1052	-0.47928	-2.9175	-693.81	693.33	692.11
1053	-1.1626	-2.9184	-740.21	739.05	738.17
1054	-1.8112	-2.9193	-785.97	784.16	783.61
1055	-2.4289	-2.9201	-831.06	828.63	828.38
1056	-2.9210	-3.0186	-875.43	872.51	872.46
1057	-2.9218	-3.5825	-919.08	916.15	915.82
1058	-2.9226	-4.1227	-961.97	959.04	958.44
1059	-2.9234	-4.6407	-1004.1	1001.2	1000.3
1060	-2.9242	-5.1378	-1045.4	1042.5	1041.4
1061	-2.9250	-5.6153	-1085.9	1083.0	1081.6
1062	-2.9258	-6.0743	-1125.6	1122.7	1121.1
1063	-2.9265	-6.5160	-1164.5	1161.5	1159.7
1064	-2.9272	-6.9415	-1202.5	1199.5	1197.5

1

```
***** ANSYS - ENGINEERING ANALYSIS SYSTEM  RELEASE 5.7.1   *****
ANSYS/Mechanical U
00251976          VERSION=INTEL NT      11:31:46  DEC 23, 2005 CP=   1164.703

 Point Beach Strainer Inner Rim Plate Analysis


 ***** POST1 NODAL STRESS LISTING *****

 LOAD STEP=     4  SUBSTEP=    15
  TIME=    4.0000      LOAD CASE=   0
 SHELL NODAL RESULTS ARE AT BOTTOM
```

NODE	S1	S2	S3	SINT	SEQV
1065	-2.9279	-7.3519	-1239.6	1236.7	1234.5
1066	33.239	-2.9059	-110.58	143.82	129.59
1067	79.486	-2.9037	-35.411	114.90	102.58
1068	159.36	-0.52472	-2.9023	162.27	161.09
1069	251.38	15.841	-2.8998	254.28	245.45
1070	343.37	26.104	-2.8980	346.27	332.72
1071	432.21	33.608	-2.8962	435.10	418.05
1072	516.96	39.458	-2.8946	519.85	500.02
1073	597.30	44.151	-2.8930	600.19	578.11
1074	673.11	47.968	-2.8916	676.00	652.06
1075	744.38	51.096	-2.8902	747.27	721.79
1076	811.12	53.669	-2.8889	814.01	787.25
1077	873.38	55.787	-2.8877	876.27	848.45
1078	931.22	57.531	-2.8866	934.11	905.42
1079	984.73	58.961	-2.8856	987.62	958.19
1080	1034.0	60.126	-2.8847	1036.9	1006.8
1081	1079.1	61.066	-2.8838	1082.0	1051.4
1082	1120.1	61.811	-2.8830	1123.0	1092.0
1083	1157.1	62.388	-2.8823	1160.0	1128.8
1084	1190.2	62.815	-2.8817	1193.1	1161.6
1085	1219.5	63.110	-2.8811	1222.4	1190.8
1086	1245.2	63.285	-2.8806	1248.0	1216.3
1087	1267.2	63.351	-2.8802	1270.1	1238.3
1088	1285.7	63.318	-2.8799	1288.6	1256.8
1089	1300.8	63.192	-2.8796	1303.6	1271.9
1090	1312.5	62.980	-2.8794	1315.4	1283.8
1091	1321.1	62.686	-2.8792	1324.0	1292.4
1092	1326.5	62.315	-2.8791	1329.4	1298.0
1093	1328.9	61.872	-2.8790	1331.8	1300.6
1094	1328.3	61.358	-2.8791	1331.2	1300.3
1095	1324.9	60.778	-2.8791	1327.8	1297.1
1096	1318.8	60.133	-2.8792	1321.6	1291.3
1097	1309.9	59.427	-2.8794	1312.8	1282.8
1098	1298.6	58.662	-2.8796	1301.4	1271.8
1099	1284.7	57.839	-2.8799	1287.6	1258.3
1100	1268.5	56.962	-2.8802	1271.3	1242.5
1101	1249.9	56.032	-2.8805	1252.8	1224.4
1102	1229.2	55.051	-2.8809	1232.1	1204.1

1

***** ANSYS - ENGINEERING ANALYSIS SYSTEM RELEASE 5.7.1 *****
ANSYS/Mechanical U
00251976 VERSION=INTEL NT 11:31:46 DEC 23, 2005 CP= 1164.703

Point Beach Strainer Inner Rim Plate Analysis

***** POST1 NODAL STRESS LISTING *****

LOAD STEP= 4 SUBSTEP= 15
TIME= 4.0000 LOAD CASE= 0
SHELL NODAL RESULTS ARE AT BOTTOM

NODE	S1	S2	S3	SINT	SEQV
1103	1206.3	54.022	-2.8814	1209.2	1181.8
1104	1181.4	52.946	-2.8819	1184.3	1157.4
1105	1154.6	51.826	-2.8824	1157.5	1131.1
1106	1126.0	50.663	-2.8829	1128.8	1103.0
1107	1095.5	49.459	-2.8835	1098.4	1073.2
1108	1063.4	48.217	-2.8841	1066.3	1041.7
1109	1029.7	46.937	-2.8847	1032.6	1008.6
1110	994.44	45.623	-2.8854	997.32	973.98
1111	957.77	44.275	-2.8861	960.66	937.96
1112	919.75	42.896	-2.8868	922.64	900.62
1113	880.46	41.487	-2.8876	883.35	862.02
1114	839.98	40.049	-2.8884	842.86	822.24
1115	798.38	38.584	-2.8892	801.27	781.36
1116	755.74	37.092	-2.8900	758.63	739.45
1117	712.15	35.575	-2.8908	715.04	696.60
1118	667.67	34.033	-2.8917	670.56	652.88
1119	622.38	32.465	-2.8925	625.27	608.36
1120	576.35	30.871	-2.8934	579.25	563.12
1121	529.66	29.248	-2.8943	532.56	517.24
1122	482.39	27.592	-2.8952	485.29	470.78
1123	434.60	25.896	-2.8961	437.50	423.84
1124	386.39	24.150	-2.8970	389.28	376.49
1125	337.82	22.335	-2.8980	340.72	328.83
1126	289.01	20.415	-2.8989	291.91	280.98
1127	240.08	18.328	-2.8998	242.98	233.09
1128	191.23	15.937	-2.9008	194.13	185.43
1129	142.84	12.915	-2.9017	145.74	138.51
1130	95.976	8.2616	-2.9027	98.879	93.796
1131	54.636	-1.9636	-2.9044	57.541	57.076
1132	29.818	-2.9045	-28.705	58.523	50.801
1133	20.505	-2.9055	-70.890	91.395	82.228
1134	16.129	-2.9065	-117.90	134.03	125.60
1135	13.244	-2.9074	-166.23	179.48	171.97
1136	10.961	-2.9084	-214.96	225.92	219.31
1137	8.9796	-2.9093	-263.72	272.70	266.96
1138	7.1742	-2.9102	-312.36	319.53	314.61
1139	5.4839	-2.9112	-360.76	366.24	362.11
1140	3.8759	-2.9121	-408.84	412.72	409.37

1

```
***** ANSYS - ENGINEERING ANALYSIS SYSTEM  RELEASE 5.7.1   *****
ANSYS/Mechanical U
00251976          VERSION=INTEL NT      11:31:46  DEC 23, 2005 CP=   1164.719

 Point Beach Strainer Inner Rim Plate Analysis


 ***** POST1 NODAL STRESS LISTING *****

 LOAD STEP=     4  SUBSTEP=    15
  TIME=    4.0000      LOAD CASE=   0
 SHELL NODAL RESULTS ARE AT BOTTOM
```

NODE	S1	S2	S3	SINT	SEQV
1141	2.3316	-2.9130	-456.56	458.89	456.29
1142	0.83928	-2.9139	-503.86	504.69	502.83
1143	-0.60818	-2.9148	-550.69	550.08	548.93
1144	-2.0156	-2.9157	-597.01	595.00	594.55
1145	-2.9166	-3.3860	-642.80	639.88	639.65
1146	-2.9174	-4.7216	-688.01	685.09	684.19
1147	-2.9183	-6.0237	-732.61	729.69	728.14
1148	-2.9191	-7.2935	-776.57	773.66	771.48
1149	-2.9199	-8.5314	-819.88	816.96	814.17
1150	-2.9208	-9.7381	-862.49	859.57	856.19
1151	-2.9216	-10.914	-904.40	901.48	897.51
1152	-2.9223	-12.059	-945.58	942.65	938.12
1153	-2.9231	-13.174	-986.00	983.08	977.99
1154	-2.9239	-14.259	-1025.7	1022.7	1017.1
1155	-2.9246	-15.314	-1064.5	1061.6	1055.5
1156	-2.9253	-16.340	-1102.6	1099.7	1093.1
1157	-2.9260	-17.337	-1139.9	1137.0	1129.8
1158	-2.9267	-18.307	-1176.4	1173.4	1165.8
1159	-2.9274	-19.250	-1212.0	1209.1	1201.0
1160	20.288	-2.9062	-108.14	128.42	118.54
1161	48.807	-2.9037	-12.426	61.233	57.070
1162	125.73	26.852	-2.9022	128.64	116.64
1163	221.05	40.487	-2.9003	223.95	205.72
1164	314.24	49.562	-2.8984	317.14	294.44
1165	403.09	56.673	-2.8967	405.99	379.72
1166	487.24	62.510	-2.8951	490.13	460.92
1167	566.65	67.391	-2.8936	569.54	537.85
1168	641.36	71.516	-2.8922	644.25	610.45
1169	711.43	75.024	-2.8908	714.32	678.72
1170	776.94	78.021	-2.8896	779.83	742.69
1171	837.99	80.587	-2.8884	840.87	802.40
1172	894.65	82.783	-2.8873	897.54	857.91
1173	947.02	84.659	-2.8863	949.91	909.30
1174	995.20	86.253	-2.8854	998.09	956.64
1175	1039.3	87.598	-2.8846	1042.2	1000.0
1176	1079.4	88.719	-2.8838	1082.2	1039.5
1177	1115.5	89.636	-2.8831	1118.4	1075.1
1178	1147.9	90.367	-2.8825	1150.8	1107.1

1

***** ANSYS - ENGINEERING ANALYSIS SYSTEM RELEASE 5.7.1 *****
ANSYS/Mechanical U
00251976 VERSION=INTEL NT 11:31:46 DEC 23, 2005 CP= 1164.734

Point Beach Strainer Inner Rim Plate Analysis

***** POST1 NODAL STRESS LISTING *****

LOAD STEP= 4 SUBSTEP= 15
TIME= 4.0000 LOAD CASE= 0
SHELL NODAL RESULTS ARE AT BOTTOM

NODE	S1	S2	S3	SINT	SEQV
1179	1176.5	90.926	-2.8819	1179.4	1135.4
1180	1201.5	91.326	-2.8815	1204.4	1160.2
1181	1223.0	91.575	-2.8811	1225.9	1181.5
1182	1241.1	91.684	-2.8807	1244.0	1199.5
1183	1255.8	91.659	-2.8804	1258.7	1214.2
1184	1267.3	91.507	-2.8802	1270.1	1225.7
1185	1275.6	91.234	-2.8801	1278.5	1234.1
1186	1280.9	90.845	-2.8800	1283.7	1239.5
1187	1283.2	90.345	-2.8799	1286.0	1242.0
1188	1282.6	89.738	-2.8799	1285.5	1241.7
1189	1279.2	89.028	-2.8800	1282.1	1238.7
1190	1273.2	88.219	-2.8801	1276.1	1233.1
1191	1264.6	87.314	-2.8803	1267.4	1224.8
1192	1253.4	86.319	-2.8805	1256.3	1214.2
1193	1239.9	85.234	-2.8807	1242.7	1201.1
1194	1224.0	84.065	-2.8810	1226.9	1185.8
1195	1205.9	82.815	-2.8814	1208.7	1168.3
1196	1185.6	81.487	-2.8818	1188.5	1148.6
1197	1163.2	80.084	-2.8822	1166.1	1126.9
1198	1138.9	78.609	-2.8827	1141.8	1103.3
1199	1112.7	77.066	-2.8832	1115.6	1077.8
1200	1084.7	75.459	-2.8837	1087.6	1050.6
1201	1054.9	73.790	-2.8843	1057.8	1021.6
1202	1023.5	72.062	-2.8849	1026.4	991.09
1203	990.60	70.279	-2.8855	993.48	958.99
1204	956.16	68.444	-2.8861	959.05	925.45
1205	920.33	66.560	-2.8868	923.22	890.53
1206	883.18	64.630	-2.8875	886.07	854.31
1207	844.78	62.657	-2.8883	847.67	816.87
1208	805.22	60.645	-2.8890	808.11	778.29
1209	764.57	58.595	-2.8898	767.46	738.63
1210	722.90	56.511	-2.8906	725.79	697.98
1211	680.28	54.396	-2.8914	683.18	656.41
1212	636.80	52.252	-2.8922	639.69	613.98
1213	592.52	50.081	-2.8931	595.41	570.77
1214	547.51	47.886	-2.8939	550.41	526.86
1215	501.85	45.667	-2.8948	504.74	482.30
1216	455.59	43.428	-2.8957	458.49	437.17

1

```
***** ANSYS - ENGINEERING ANALYSIS SYSTEM  RELEASE 5.7.1   *****
ANSYS/Mechanical U
00251976          VERSION=INTEL NT      11:31:46  DEC 23, 2005 CP=   1164.734

 Point Beach Strainer Inner Rim Plate Analysis


 ***** POST1 NODAL STRESS LISTING *****

 LOAD STEP=     4  SUBSTEP=    15
  TIME=    4.0000      LOAD CASE=   0
 SHELL NODAL RESULTS ARE AT BOTTOM
```

NODE	S1	S2	S3	SINT	SEQV
1217	408.81	41.167	-2.8966	411.71	391.54
1218	361.58	38.884	-2.8975	364.48	345.49
1219	313.97	36.575	-2.8984	316.87	299.09
1220	266.04	34.231	-2.8993	268.94	252.43
1221	217.89	31.834	-2.9002	220.79	205.63
1222	169.61	29.333	-2.9011	172.52	158.87
1223	121.43	26.580	-2.9021	124.33	112.53
1224	74.085	22.888	-2.9030	76.988	67.873
1225	35.018	10.870	-2.9040	37.922	33.248
1226	24.309	-2.9048	-29.497	53.806	46.598
1227	20.762	-2.9058	-76.964	97.726	88.304
1228	18.081	-2.9067	-125.18	143.26	134.01
1229	15.654	-2.9076	-173.49	189.15	180.58
1230	13.343	-2.9085	-221.70	235.05	227.36
1231	11.102	-2.9095	-269.72	280.83	274.09
1232	8.9105	-2.9104	-317.49	326.40	320.65
1233	6.7601	-2.9113	-364.94	371.70	366.96
1234	4.6463	-2.9122	-412.05	416.69	412.96
1235	2.5671	-2.9131	-458.75	461.32	458.60
1236	0.52176	-2.9140	-505.02	505.54	503.83
1237	-1.4899	-2.9148	-550.81	549.32	548.61
1238	-2.9157	-3.4676	-596.10	593.19	592.91
1239	-2.9165	-5.4107	-640.85	637.93	636.69
1240	-2.9174	-7.3188	-685.03	682.11	679.92
1241	-2.9182	-9.1910	-728.60	725.69	722.57
1242	-2.9190	-11.027	-771.55	768.64	764.61
1243	-2.9198	-12.825	-813.85	810.93	806.03
1244	-2.9206	-14.586	-855.48	852.55	846.78
1245	-2.9214	-16.308	-896.40	893.48	886.86
1246	-2.9222	-17.992	-936.61	933.69	926.25
1247	-2.9229	-19.636	-976.09	973.16	964.92
1248	-2.9237	-21.241	-1014.8	1011.9	1002.9
1249	-2.9244	-22.806	-1052.8	1049.8	1040.0
1250	-2.9251	-24.332	-1090.0	1087.0	1076.5
1251	-2.9258	-25.819	-1126.3	1123.4	1112.1
1252	-2.9265	-27.268	-1161.9	1159.0	1147.0
1253	-2.9271	-28.680	-1196.7	1193.8	1181.1
1254	16.377	-2.9063	-107.47	123.85	115.42

1

```
***** ANSYS - ENGINEERING ANALYSIS SYSTEM  RELEASE 5.7.1   *****
ANSYS/Mechanical U
00251976          VERSION=INTEL NT      11:31:46  DEC 23, 2005 CP=   1164.734

 Point Beach Strainer Inner Rim Plate Analysis


 ***** POST1 NODAL STRESS LISTING *****

 LOAD STEP=     4  SUBSTEP=    15
  TIME=    4.0000      LOAD CASE=   0
 SHELL NODAL RESULTS ARE AT BOTTOM
```

NODE	S1	S2	S3	SINT	SEQV
1255	31.727	2.8427	-2.9056	34.632	32.146
1256	109.80	41.811	-2.9023	112.70	98.293
1257	209.47	51.595	-2.9004	212.37	191.04
1258	303.92	59.520	-2.8986	306.82	280.86
1259	393.20	66.101	-2.8969	396.09	366.50
1260	477.42	71.638	-2.8953	480.32	447.73
1261	556.72	76.353	-2.8938	559.61	524.50
1262	631.19	80.409	-2.8923	634.08	596.81
1263	700.95	83.923	-2.8910	703.84	664.70
1264	766.12	86.984	-2.8898	769.01	728.24
1265	826.79	89.655	-2.8886	829.68	787.50
1266	883.08	91.985	-2.8875	885.97	842.55
1267	935.09	94.013	-2.8865	937.98	893.48
1268	982.92	95.769	-2.8856	985.81	940.37
1269	1026.7	97.276	-2.8848	1029.6	983.31
1270	1066.4	98.556	-2.8840	1069.3	1022.4
1271	1102.3	99.623	-2.8834	1105.2	1057.7
1272	1134.4	100.49	-2.8827	1137.3	1089.3
1273	1162.8	101.18	-2.8822	1165.7	1117.3
1274	1187.6	101.69	-2.8817	1190.5	1141.8
1275	1208.9	102.03	-2.8813	1211.8	1162.9
1276	1226.9	102.22	-2.8810	1229.7	1180.7
1277	1241.4	102.25	-2.8807	1244.3	1195.2
1278	1252.8	102.14	-2.8805	1255.7	1206.6
1279	1261.1	101.89	-2.8803	1263.9	1214.9
1280	1266.3	101.51	-2.8802	1269.2	1220.3
1281	1268.5	101.01	-2.8802	1271.4	1222.8
1282	1268.0	100.38	-2.8802	1270.9	1222.5
1283	1264.6	99.629	-2.8803	1267.5	1219.5
1284	1258.6	98.767	-2.8804	1261.5	1213.9
1285	1250.1	97.796	-2.8805	1252.9	1205.8
1286	1239.0	96.720	-2.8808	1241.9	1195.2
1287	1225.5	95.543	-2.8810	1228.4	1182.3
1288	1209.8	94.269	-2.8813	1212.6	1167.1
1289	1191.8	92.902	-2.8817	1194.7	1149.8
1290	1171.6	91.446	-2.8820	1174.5	1130.3
1291	1149.5	89.904	-2.8825	1152.4	1108.9
1292	1125.3	88.281	-2.8829	1128.2	1085.5

1

```
***** ANSYS - ENGINEERING ANALYSIS SYSTEM  RELEASE 5.7.1   *****
ANSYS/Mechanical U
00251976          VERSION=INTEL NT      11:31:46  DEC 23, 2005 CP=   1164.766

 Point Beach Strainer Inner Rim Plate Analysis


 ***** POST1 NODAL STRESS LISTING *****

 LOAD STEP=     4  SUBSTEP=    15
  TIME=    4.0000      LOAD CASE=   0
 SHELL NODAL RESULTS ARE AT BOTTOM
```

NODE	S1	S2	S3	SINT	SEQV
1293	1099.3	86.581	-2.8834	1102.2	1060.3
1294	1071.5	84.807	-2.8839	1074.4	1033.3
1295	1042.0	82.963	-2.8845	1044.8	1004.7
1296	1010.8	81.053	-2.8851	1013.7	974.44
1297	978.10	79.080	-2.8857	980.99	942.68
1298	943.93	77.049	-2.8864	946.81	909.48
1299	908.36	74.962	-2.8871	911.25	874.92
1300	871.48	72.824	-2.8878	874.37	839.08
1301	833.37	70.637	-2.8885	836.26	802.03
1302	794.11	68.407	-2.8892	797.00	763.85
1303	753.75	66.135	-2.8900	756.64	724.60
1304	712.39	63.826	-2.8908	715.28	684.37
1305	670.10	61.483	-2.8916	672.99	643.22
1306	626.93	59.109	-2.8924	629.83	601.23
1307	582.98	56.707	-2.8932	585.87	558.46
1308	538.29	54.282	-2.8941	541.19	514.99
1309	492.95	51.835	-2.8950	495.85	470.87
1310	447.02	49.370	-2.8958	449.92	426.19
1311	400.56	46.891	-2.8967	403.46	381.01
1312	353.65	44.399	-2.8976	356.54	335.40
1313	306.33	41.899	-2.8985	309.23	289.44
1314	258.67	39.392	-2.8994	261.57	243.20
1315	210.74	36.883	-2.9003	213.64	196.78
1316	162.58	34.373	-2.9013	165.48	150.35
1317	114.27	31.865	-2.9022	117.17	104.23
1318	65.842	29.362	-2.9031	68.745	59.572
1319	26.866	17.365	-2.9041	29.770	26.338
1320	24.380	-2.9049	-31.112	55.492	48.060
1321	21.906	-2.9058	-79.539	101.45	91.595
1322	19.447	-2.9068	-127.87	147.31	137.51
1323	17.004	-2.9077	-176.04	193.05	183.90
1324	14.580	-2.9086	-224.03	238.61	230.36
1325	12.178	-2.9095	-271.77	283.95	276.72
1326	9.7979	-2.9104	-319.24	329.03	322.87
1327	7.4433	-2.9113	-366.37	373.82	368.75
1328	5.1155	-2.9122	-413.15	418.26	414.31
1329	2.8163	-2.9131	-459.52	462.33	459.50
1330	0.54744	-2.9140	-505.45	506.00	504.28

1

```
***** ANSYS - ENGINEERING ANALYSIS SYSTEM  RELEASE 5.7.1   *****
ANSYS/Mechanical U
00251976          VERSION=INTEL NT      11:31:46  DEC 23, 2005 CP=   1164.766

 Point Beach Strainer Inner Rim Plate Analysis


 ***** POST1 NODAL STRESS LISTING *****

 LOAD STEP=     4  SUBSTEP=    15
  TIME=    4.0000      LOAD CASE=   0
 SHELL NODAL RESULTS ARE AT BOTTOM
```

NODE	S1	S2	S3	SINT	SEQV
1331	-1.6895	-2.9148	-550.91	549.22	548.61
1332	-2.9157	-3.8929	-595.86	592.94	592.46
1333	-2.9165	-6.0614	-640.27	637.36	635.79
1334	-2.9174	-8.1936	-684.11	681.20	678.57
1335	-2.9182	-10.288	-727.36	724.44	720.79
1336	-2.9190	-12.344	-769.98	767.06	762.40
1337	-2.9198	-14.360	-811.96	809.04	803.38
1338	-2.9206	-16.336	-853.26	850.34	843.71
1339	-2.9214	-18.270	-893.87	890.95	883.37
1340	-2.9221	-20.162	-933.77	930.85	922.35
1341	-2.9229	-22.011	-972.94	970.01	960.61
1342	-2.9236	-23.816	-1011.4	1008.4	998.15
1343	-2.9243	-25.579	-1049.0	1046.1	1035.0
1344	-2.9250	-27.298	-1085.9	1083.0	1071.0
1345	-2.9257	-28.974	-1122.0	1119.1	1106.3
1346	-2.9264	-30.608	-1157.3	1154.4	1140.8
1347	-2.9270	-32.200	-1191.9	1188.9	1174.6
1348	16.409	-2.9062	-104.40	120.81	112.40
1349	39.049	-1.8173	-2.9094	41.958	41.423
1350	119.81	34.674	-2.9022	122.72	108.90
1351	217.89	45.853	-2.9003	220.79	200.90
1352	312.30	53.680	-2.8984	315.20	291.06
1353	401.92	59.788	-2.8967	404.82	377.40
1354	486.62	64.765	-2.8951	489.51	459.43
1355	566.39	68.930	-2.8936	569.29	536.99
1356	641.34	72.483	-2.8922	644.23	610.04
1357	711.55	75.555	-2.8908	714.44	678.62
1358	777.13	78.230	-2.8896	780.02	742.79
1359	838.20	80.569	-2.8884	841.09	802.62
1360	894.86	82.614	-2.8873	897.75	858.20
1361	947.22	84.397	-2.8863	950.10	909.61
1362	995.37	85.942	-2.8854	998.26	956.94
1363	1039.4	87.270	-2.8846	1042.3	1000.3
1364	1079.5	88.395	-2.8838	1082.4	1039.7
1365	1115.6	89.332	-2.8831	1118.5	1075.4
1366	1147.9	90.093	-2.8825	1150.8	1107.3
1367	1176.6	90.687	-2.8819	1179.4	1135.6
1368	1201.6	91.123	-2.8815	1204.4	1160.3

1

```
***** ANSYS - ENGINEERING ANALYSIS SYSTEM  RELEASE 5.7.1   *****
ANSYS/Mechanical U
00251976          VERSION=INTEL NT      11:31:46  DEC 23, 2005 CP=   1164.781

 Point Beach Strainer Inner Rim Plate Analysis


 ***** POST1 NODAL STRESS LISTING *****

 LOAD STEP=     4  SUBSTEP=    15
  TIME=    4.0000      LOAD CASE=   0
 SHELL NODAL RESULTS ARE AT BOTTOM
```

NODE	S1	S2	S3	SINT	SEQV
1369	1223.0	91.410	-2.8811	1225.9	1181.6
1370	1241.1	91.554	-2.8807	1244.0	1199.5
1371	1255.8	91.562	-2.8804	1258.7	1214.2
1372	1267.3	91.439	-2.8802	1270.1	1225.7
1373	1275.6	91.192	-2.8801	1278.4	1234.1
1374	1280.8	90.825	-2.8800	1283.7	1239.5
1375	1283.1	90.343	-2.8799	1286.0	1242.0
1376	1282.6	89.751	-2.8799	1285.4	1241.7
1377	1279.2	89.052	-2.8800	1282.1	1238.7
1378	1273.2	88.252	-2.8801	1276.1	1233.0
1379	1264.5	87.354	-2.8803	1267.4	1224.8
1380	1253.4	86.362	-2.8805	1256.3	1214.1
1381	1239.9	85.281	-2.8807	1242.7	1201.1
1382	1224.0	84.112	-2.8810	1226.9	1185.8
1383	1205.8	82.862	-2.8814	1208.7	1168.2
1384	1185.6	81.532	-2.8818	1188.5	1148.6
1385	1163.2	80.127	-2.8822	1166.1	1126.9
1386	1138.9	78.649	-2.8827	1141.8	1103.3
1387	1112.7	77.104	-2.8832	1115.6	1077.8
1388	1084.7	75.493	-2.8837	1087.6	1050.6
1389	1054.9	73.820	-2.8843	1057.8	1021.6
1390	1023.5	72.089	-2.8849	1026.4	991.07
1391	990.59	70.303	-2.8855	993.48	958.98
1392	956.16	68.465	-2.8861	959.05	925.44
1393	920.33	66.578	-2.8868	923.22	890.52
1394	883.18	64.645	-2.8875	886.07	854.30
1395	844.78	62.670	-2.8883	847.67	816.87
1396	805.22	60.655	-2.8890	808.11	778.28
1397	764.57	58.604	-2.8898	767.46	738.63
1398	722.90	56.518	-2.8906	725.79	697.98
1399	680.28	54.402	-2.8914	683.18	656.41
1400	636.80	52.256	-2.8922	639.70	613.98
1401	592.52	50.084	-2.8931	595.42	570.77
1402	547.51	47.888	-2.8939	550.41	526.86
1403	501.85	45.669	-2.8948	504.74	482.30
1404	455.59	43.429	-2.8957	458.49	437.17
1405	408.81	41.168	-2.8966	411.71	391.54
1406	361.58	38.884	-2.8975	364.48	345.49

1

```
***** ANSYS - ENGINEERING ANALYSIS SYSTEM  RELEASE 5.7.1   *****
ANSYS/Mechanical U
00251976          VERSION=INTEL NT      11:31:46  DEC 23, 2005 CP=   1164.797

 Point Beach Strainer Inner Rim Plate Analysis


 ***** POST1 NODAL STRESS LISTING *****

 LOAD STEP=     4  SUBSTEP=    15
  TIME=    4.0000      LOAD CASE=   0
 SHELL NODAL RESULTS ARE AT BOTTOM
```

NODE	S1	S2	S3	SINT	SEQV
1407	313.97	36.575	-2.8984	316.87	299.09
1408	266.04	34.232	-2.8993	268.94	252.43
1409	217.89	31.834	-2.9002	220.79	205.63
1410	169.61	29.334	-2.9011	172.51	158.87
1411	121.43	26.582	-2.9021	124.33	112.53
1412	74.081	22.892	-2.9030	76.984	67.869
1413	35.010	10.879	-2.9040	37.914	33.239
1414	24.305	-2.9048	-29.493	53.798	46.592
1415	20.760	-2.9058	-76.962	97.722	88.301
1416	18.080	-2.9067	-125.18	143.26	134.01
1417	15.654	-2.9076	-173.49	189.14	180.58
1418	13.343	-2.9085	-221.70	235.05	227.36
1419	11.102	-2.9095	-269.72	280.82	274.09
1420	8.9112	-2.9104	-317.49	326.40	320.65
1421	6.7610	-2.9113	-364.94	371.70	366.96
1422	4.6475	-2.9122	-412.05	416.69	412.97
1423	2.5685	-2.9131	-458.75	461.32	458.60
1424	0.52332	-2.9140	-505.02	505.54	503.83
1425	-1.4882	-2.9148	-550.81	549.33	548.61
1426	-2.9157	-3.4658	-596.10	593.19	592.91
1427	-2.9165	-5.4090	-640.85	637.93	636.69
1428	-2.9174	-7.3170	-685.03	682.11	679.92
1429	-2.9182	-9.1893	-728.60	725.69	722.57
1430	-2.9190	-11.025	-771.56	768.64	764.62
1431	-2.9198	-12.824	-813.85	810.93	806.03
1432	-2.9206	-14.585	-855.48	852.56	846.78
1433	-2.9214	-16.307	-896.40	893.48	886.86
1434	-2.9222	-17.991	-936.61	933.69	926.25
1435	-2.9229	-19.636	-976.09	973.16	964.92
1436	-2.9237	-21.241	-1014.8	1011.9	1002.9
1437	-2.9244	-22.807	-1052.8	1049.8	1040.0
1438	-2.9251	-24.333	-1090.0	1087.0	1076.5
1439	-2.9258	-25.820	-1126.3	1123.4	1112.1
1440	-2.9265	-27.269	-1161.9	1159.0	1147.0
1441	-2.9271	-28.680	-1196.7	1193.8	1181.1
1442	24.262	-2.9059	-102.40	126.66	115.50
1443	68.900	-2.9037	-21.941	90.841	82.976
1444	151.62	11.178	-2.9019	154.52	147.99

1

```
***** ANSYS - ENGINEERING ANALYSIS SYSTEM  RELEASE 5.7.1   *****
ANSYS/Mechanical U
00251976          VERSION=INTEL NT      11:31:46  DEC 23, 2005 CP=   1164.813

 Point Beach Strainer Inner Rim Plate Analysis


 ***** POST1 NODAL STRESS LISTING *****

 LOAD STEP=     4  SUBSTEP=    15
  TIME=    4.0000      LOAD CASE=   0
 SHELL NODAL RESULTS ARE AT BOTTOM
```

NODE	S1	S2	S3	SINT	SEQV
1445	246.64	25.080	-2.8999	249.54	236.79
1446	340.62	33.301	-2.8980	343.52	326.93
1447	430.80	39.035	-2.8963	433.70	414.32
1448	516.43	43.374	-2.8946	519.32	497.80
1449	597.31	46.824	-2.8930	600.20	576.95
1450	673.43	49.656	-2.8916	676.32	651.64
1451	744.84	52.031	-2.8902	747.73	721.84
1452	811.63	54.048	-2.8889	814.52	787.59
1453	873.87	55.773	-2.8877	876.76	848.95
1454	931.67	57.252	-2.8866	934.56	905.99
1455	985.11	58.517	-2.8856	988.00	958.77
1456	1034.3	59.593	-2.8847	1037.2	1007.4
1457	1079.3	60.498	-2.8838	1082.2	1051.9
1458	1120.2	61.249	-2.8830	1123.1	1092.5
1459	1157.2	61.857	-2.8823	1160.1	1129.1
1460	1190.3	62.333	-2.8817	1193.2	1161.9
1461	1219.6	62.686	-2.8811	1222.5	1191.0
1462	1245.2	62.924	-2.8806	1248.0	1216.5
1463	1267.2	63.053	-2.8802	1270.0	1238.4
1464	1285.6	63.081	-2.8799	1288.5	1256.8
1465	1300.7	63.011	-2.8796	1303.6	1271.9
1466	1312.5	62.850	-2.8794	1315.4	1283.8
1467	1321.0	62.601	-2.8792	1323.9	1292.4
1468	1326.4	62.269	-2.8791	1329.3	1298.0
1469	1328.8	61.858	-2.8790	1331.7	1300.5
1470	1328.3	61.371	-2.8791	1331.1	1300.2
1471	1324.9	60.812	-2.8791	1327.7	1297.1
1472	1318.7	60.184	-2.8792	1321.6	1291.2
1473	1309.9	59.489	-2.8794	1312.8	1282.7
1474	1298.5	58.732	-2.8796	1301.4	1271.7
1475	1284.7	57.914	-2.8799	1287.5	1258.3
1476	1268.4	57.039	-2.8802	1271.3	1242.4
1477	1249.9	56.109	-2.8806	1252.8	1224.3
1478	1229.2	55.127	-2.8809	1232.0	1204.1
1479	1206.3	54.094	-2.8814	1209.2	1181.7
1480	1181.4	53.014	-2.8819	1184.3	1157.4
1481	1154.6	51.889	-2.8824	1157.5	1131.1
1482	1125.9	50.721	-2.8829	1128.8	1103.0

1

```
***** ANSYS - ENGINEERING ANALYSIS SYSTEM  RELEASE 5.7.1   *****
ANSYS/Mechanical U
00251976          VERSION=INTEL NT      11:31:46  DEC 23, 2005 CP=   1164.844

 Point Beach Strainer Inner Rim Plate Analysis


 ***** POST1 NODAL STRESS LISTING *****

 LOAD STEP=     4  SUBSTEP=    15
  TIME=    4.0000      LOAD CASE=   0
 SHELL NODAL RESULTS ARE AT BOTTOM
```

NODE	S1	S2	S3	SINT	SEQV
1483	1095.5	49.511	-2.8835	1098.4	1073.2
1484	1063.4	48.263	-2.8841	1066.3	1041.6
1485	1029.7	46.979	-2.8847	1032.6	1008.5
1486	994.44	45.659	-2.8854	997.32	973.96
1487	957.77	44.306	-2.8861	960.66	937.95
1488	919.75	42.923	-2.8868	922.64	900.61
1489	880.46	41.509	-2.8876	883.35	862.01
1490	839.98	40.068	-2.8884	842.87	822.23
1491	798.38	38.599	-2.8892	801.27	781.35
1492	755.75	37.105	-2.8900	758.64	739.45
1493	712.15	35.585	-2.8908	715.04	696.60
1494	667.67	34.041	-2.8917	670.56	652.88
1495	622.38	32.471	-2.8925	625.27	608.36
1496	576.35	30.875	-2.8934	579.25	563.12
1497	529.67	29.251	-2.8943	532.56	517.24
1498	482.39	27.594	-2.8952	485.29	470.78
1499	434.61	25.898	-2.8961	437.50	423.84
1500	386.39	24.151	-2.8970	389.29	376.49
1501	337.82	22.335	-2.8980	340.72	328.83
1502	289.01	20.416	-2.8989	291.91	280.98
1503	240.08	18.329	-2.8998	242.98	233.09
1504	191.23	15.939	-2.9008	194.13	185.43
1505	142.84	12.918	-2.9017	145.74	138.51
1506	95.972	8.2657	-2.9027	98.875	93.791
1507	54.630	-1.9567	-2.9044	57.534	57.066
1508	29.812	-2.9045	-28.698	58.510	50.789
1509	20.501	-2.9055	-70.885	91.386	82.221
1510	16.126	-2.9065	-117.90	134.02	125.59
1511	13.243	-2.9074	-166.23	179.47	171.97
1512	10.961	-2.9084	-214.96	225.92	219.31
1513	8.9800	-2.9093	-263.72	272.70	266.96
1514	7.1751	-2.9102	-312.36	319.53	314.61
1515	5.4853	-2.9112	-360.76	366.24	362.12
1516	3.8778	-2.9121	-408.84	412.72	409.37
1517	2.3338	-2.9130	-456.56	458.89	456.29
1518	0.84178	-2.9139	-503.86	504.70	502.83
1519	-0.60548	-2.9148	-550.69	550.08	548.93
1520	-2.0127	-2.9157	-597.01	595.00	594.55

1

```
***** ANSYS - ENGINEERING ANALYSIS SYSTEM  RELEASE 5.7.1   *****
ANSYS/Mechanical U
00251976          VERSION=INTEL NT      11:31:46  DEC 23, 2005 CP=   1164.844

 Point Beach Strainer Inner Rim Plate Analysis


 ***** POST1 NODAL STRESS LISTING *****

 LOAD STEP=     4  SUBSTEP=    15
  TIME=    4.0000      LOAD CASE=   0
 SHELL NODAL RESULTS ARE AT BOTTOM
```

NODE	S1	S2	S3	SINT	SEQV
1521	-2.9166	-3.3831	-642.80	639.88	639.65
1522	-2.9174	-4.7188	-688.01	685.09	684.19
1523	-2.9183	-6.0211	-732.61	729.69	728.15
1524	-2.9191	-7.2912	-776.58	773.66	771.48
1525	-2.9199	-8.5295	-819.88	816.96	814.17
1526	-2.9208	-9.7367	-862.50	859.58	856.19
1527	-2.9216	-10.913	-904.40	901.48	897.51
1528	-2.9223	-12.059	-945.58	942.66	938.12
1529	-2.9231	-13.174	-986.01	983.08	978.00
1530	-2.9239	-14.260	-1025.7	1022.7	1017.1
1531	-2.9246	-15.315	-1064.5	1061.6	1055.5
1532	-2.9253	-16.342	-1102.6	1099.7	1093.1
1533	-2.9260	-17.339	-1139.9	1137.0	1129.8
1534	-2.9267	-18.308	-1176.4	1173.4	1165.8
1535	-2.9274	-19.250	-1212.0	1209.1	1201.0
1536	55.044	-2.9055	-111.80	166.85	146.72
1537	116.49	-2.9033	-51.937	168.43	150.04
1538	203.01	-2.9011	-21.354	224.36	215.73
1539	297.82	-2.8989	-6.0672	303.89	302.32
1540	392.35	2.8121	-2.8973	395.24	392.42
1541	483.71	8.6139	-2.8954	486.60	480.95
1542	570.94	12.717	-2.8937	573.84	566.19
1543	653.70	15.775	-2.8921	656.59	647.46
1544	731.85	18.139	-2.8905	734.74	724.46
1545	805.37	20.014	-2.8891	808.26	797.06
1546	874.28	21.525	-2.8878	877.17	865.22
1547	938.61	22.756	-2.8865	941.50	928.94
1548	998.43	23.764	-2.8854	1001.3	988.26
1549	1053.8	24.590	-2.8843	1056.7	1043.2
1550	1104.8	25.264	-2.8833	1107.7	1093.9
1551	1151.5	25.808	-2.8825	1154.4	1140.3
1552	1194.1	26.240	-2.8816	1196.9	1182.6
1553	1232.5	26.574	-2.8809	1235.3	1220.9
1554	1266.9	26.821	-2.8802	1269.7	1255.2
1555	1297.3	26.989	-2.8797	1300.2	1285.5
1556	1324.0	27.088	-2.8791	1326.8	1312.1
1557	1346.9	27.123	-2.8787	1349.7	1335.0
1558	1366.1	27.099	-2.8783	1369.0	1354.3

1

```
***** ANSYS - ENGINEERING ANALYSIS SYSTEM  RELEASE 5.7.1   *****
ANSYS/Mechanical U
00251976          VERSION=INTEL NT      11:31:46  DEC 23, 2005 CP=   1164.859

 Point Beach Strainer Inner Rim Plate Analysis


 ***** POST1 NODAL STRESS LISTING *****

 LOAD STEP=     4  SUBSTEP=    15
  TIME=    4.0000      LOAD CASE=   0
 SHELL NODAL RESULTS ARE AT BOTTOM
```

NODE	S1	S2	S3	SINT	SEQV
1559	1381.8	27.022	-2.8780	1384.7	1370.0
1560	1394.1	26.896	-2.8778	1397.0	1382.3
1561	1403.0	26.724	-2.8776	1405.9	1391.3
1562	1408.7	26.509	-2.8775	1411.6	1397.1
1563	1411.2	26.255	-2.8775	1414.1	1399.7
1564	1410.6	25.964	-2.8775	1413.5	1399.3
1565	1407.1	25.638	-2.8776	1410.0	1396.0
1566	1400.8	25.280	-2.8777	1403.6	1389.8
1567	1391.6	24.891	-2.8779	1394.5	1380.8
1568	1379.8	24.473	-2.8781	1382.7	1369.2
1569	1365.4	24.028	-2.8784	1368.3	1355.0
1570	1348.5	23.557	-2.8787	1351.4	1338.3
1571	1329.2	23.061	-2.8790	1332.1	1319.3
1572	1307.6	22.542	-2.8795	1310.5	1298.0
1573	1283.8	22.001	-2.8799	1286.7	1274.5
1574	1258.0	21.438	-2.8804	1260.8	1248.9
1575	1230.0	20.855	-2.8809	1232.9	1221.2
1576	1200.2	20.253	-2.8815	1203.1	1191.7
1577	1168.5	19.632	-2.8821	1171.4	1160.3
1578	1135.1	18.992	-2.8827	1138.0	1127.2
1579	1100.0	18.335	-2.8834	1102.9	1092.4
1580	1063.3	17.660	-2.8841	1066.2	1056.0
1581	1025.1	16.968	-2.8848	1028.0	1018.2
1582	985.54	16.258	-2.8856	988.42	978.99
1583	944.64	15.531	-2.8864	947.52	938.45
1584	902.50	14.785	-2.8872	905.38	896.68
1585	859.20	14.020	-2.8880	862.09	853.76
1586	814.83	13.235	-2.8889	817.72	809.78
1587	769.47	12.427	-2.8897	772.36	764.82
1588	723.20	11.593	-2.8906	726.09	718.95
1589	676.09	10.729	-2.8915	678.98	672.28
1590	628.23	9.8312	-2.8924	631.13	624.86
1591	579.71	8.8900	-2.8934	582.60	576.80
1592	530.60	7.8949	-2.8943	533.49	528.18
1593	480.99	6.8299	-2.8953	483.88	479.09
1594	430.97	5.6708	-2.8962	433.87	429.65
1595	380.66	4.3806	-2.8972	383.55	379.97
1596	330.17	2.8993	-2.8982	333.07	330.21

1

```
***** ANSYS - ENGINEERING ANALYSIS SYSTEM  RELEASE 5.7.1   *****
ANSYS/Mechanical U
00251976          VERSION=INTEL NT      11:31:46  DEC 23, 2005 CP=   1164.859

 Point Beach Strainer Inner Rim Plate Analysis


 ***** POST1 NODAL STRESS LISTING *****

 LOAD STEP=     4  SUBSTEP=    15
  TIME=    4.0000      LOAD CASE=   0
 SHELL NODAL RESULTS ARE AT BOTTOM
```

NODE	S1	S2	S3	SINT	SEQV
1597	279.68	1.1239	-2.8992	282.57	280.58
1598	229.43	-1.1350	-2.9002	232.33	231.45
1599	179.88	-2.9010	-4.2613	184.14	183.47
1600	131.95	-2.9021	-9.1223	141.07	138.07
1601	87.876	-2.9031	-17.890	105.77	99.126
1602	52.682	-2.9041	-35.536	88.218	77.257
1603	31.395	-2.9051	-67.031	98.425	86.533
1604	20.804	-2.9061	-109.11	129.91	119.83
1605	15.190	-2.9071	-156.00	171.19	162.90
1606	11.742	-2.9081	-204.84	216.58	209.64
1607	9.3452	-2.9090	-254.47	263.81	257.90
1608	7.5244	-2.9100	-304.36	311.89	306.80
1609	6.0505	-2.9110	-354.24	360.29	355.90
1610	4.8024	-2.9119	-403.95	408.76	404.95
1611	3.7104	-2.9129	-453.38	457.09	453.81
1612	2.7320	-2.9138	-502.43	505.16	502.36
1613	1.8397	-2.9148	-551.05	552.89	550.53
1614	1.0154	-2.9157	-599.19	600.20	598.25
1615	0.24612	-2.9166	-646.79	647.03	645.46
1616	-0.47699	-2.9175	-693.81	693.33	692.12
1617	-1.1606	-2.9184	-740.22	739.06	738.18
1618	-1.8096	-2.9193	-785.98	784.17	783.62
1619	-2.4279	-2.9201	-831.06	828.63	828.39
1620	-2.9210	-3.0182	-875.44	872.52	872.47
1621	-2.9218	-3.5829	-919.08	916.16	915.83
1622	-2.9226	-4.1238	-961.97	959.05	958.45
1623	-2.9234	-4.6426	-1004.1	1001.2	1000.3
1624	-2.9242	-5.1404	-1045.4	1042.5	1041.4
1625	-2.9250	-5.6184	-1085.9	1083.0	1081.7
1626	-2.9258	-6.0776	-1125.6	1122.7	1121.1
1627	-2.9265	-6.5190	-1164.5	1161.5	1159.7
1628	-2.9272	-6.9436	-1202.5	1199.5	1197.5
1629	-2.9279	-7.3524	-1239.6	1236.7	1234.5
1630	451.14	-2.8958	-3.6825	454.82	454.43
1631	0.42167	-2.9253	-1102.1	1102.5	1100.9
1632	0.43299	-2.9250	-1083.1	1083.6	1081.9
1633	0.44202	-2.9246	-1064.6	1065.0	1063.3
1634	0.44898	-2.9243	-1046.4	1046.8	1045.2

1

```
***** ANSYS - ENGINEERING ANALYSIS SYSTEM  RELEASE 5.7.1   *****
ANSYS/Mechanical U
00251976          VERSION=INTEL NT      11:31:46  DEC 23, 2005 CP=   1164.891

 Point Beach Strainer Inner Rim Plate Analysis


 ***** POST1 NODAL STRESS LISTING *****

 LOAD STEP=     4  SUBSTEP=    15
  TIME=    4.0000      LOAD CASE=   0
 SHELL NODAL RESULTS ARE AT BOTTOM
```

NODE	S1	S2	S3	SINT	SEQV
1635	0.45402	-2.9239	-1028.6	1029.1	1027.4
1636	0.45726	-2.9236	-1011.2	1011.7	1010.0
1637	0.45879	-2.9233	-994.21	994.67	992.98
1638	0.45873	-2.9229	-977.59	978.04	976.36
1639	0.45715	-2.9226	-961.34	961.80	960.12
1640	0.45414	-2.9223	-945.48	945.93	944.25
1641	0.44976	-2.9220	-929.99	930.44	928.75
1642	0.44408	-2.9218	-914.86	915.30	913.62
1643	0.43717	-2.9215	-900.08	900.52	898.85
1644	0.42909	-2.9212	-885.66	886.09	884.42
1645	0.41989	-2.9209	-871.58	872.00	870.34
1646	0.40963	-2.9207	-857.83	858.24	856.58
1647	0.39837	-2.9204	-844.40	844.80	843.15
1648	0.38616	-2.9202	-831.29	831.67	830.03
1649	0.37304	-2.9199	-818.47	818.84	817.20
1650	0.35908	-2.9197	-805.94	806.30	804.67
1651	0.34431	-2.9195	-793.69	794.03	792.41
1652	0.32879	-2.9192	-781.69	782.02	780.40
1653	0.31257	-2.9190	-769.95	770.26	768.65
1654	0.29570	-2.9188	-758.43	758.73	757.13
1655	0.27823	-2.9186	-747.14	747.41	745.82
1656	0.26022	-2.9184	-736.04	736.30	734.71
1657	0.24172	-2.9181	-725.12	725.37	723.79
1658	0.22279	-2.9179	-714.38	714.60	713.03
1659	0.20350	-2.9177	-703.77	703.98	702.42
1660	0.18389	-2.9175	-693.30	693.49	691.94
1661	0.16406	-2.9173	-682.94	683.10	681.57
1662	0.14407	-2.9171	-672.66	672.81	671.28
1663	0.12402	-2.9170	-662.45	662.58	661.06
1664	0.10399	-2.9168	-652.29	652.40	650.89
1665	0.84081E-01	-2.9166	-642.16	642.24	640.75
1666	0.64415E-01	-2.9164	-632.02	632.09	630.60
1667	0.45120E-01	-2.9162	-621.87	621.91	620.44
1668	0.26337E-01	-2.9160	-611.66	611.69	610.22
1669	0.82328E-02	-2.9158	-601.39	601.40	599.94
1670	-0.90143E-02	-2.9156	-591.03	591.02	589.57
1671	-0.25189E-01	-2.9154	-580.54	580.52	579.08
1672	-0.40060E-01	-2.9152	-569.91	569.87	568.44

1

```
***** ANSYS - ENGINEERING ANALYSIS SYSTEM  RELEASE 5.7.1   *****
ANSYS/Mechanical U
00251976          VERSION=INTEL NT      11:31:46  DEC 23, 2005 CP=   1164.891

 Point Beach Strainer Inner Rim Plate Analysis


 ***** POST1 NODAL STRESS LISTING *****

 LOAD STEP=     4  SUBSTEP=    15
  TIME=    4.0000      LOAD CASE=   0
 SHELL NODAL RESULTS ARE AT BOTTOM
```

NODE	S1	S2	S3	SINT	SEQV
1673	-0.53349E-01	-2.9150	-559.11	559.06	557.63
1674	-0.64750E-01	-2.9148	-548.11	548.04	546.62
1675	-0.73899E-01	-2.9146	-536.88	536.80	535.39
1676	-0.80389E-01	-2.9143	-525.40	525.32	523.90
1677	-0.83733E-01	-2.9141	-513.63	513.55	512.14
1678	-0.83382E-01	-2.9139	-501.56	501.47	500.06
1679	-0.78678E-01	-2.9136	-489.14	489.06	487.65
1680	-0.68865E-01	-2.9134	-476.35	476.28	474.87
1681	-0.53033E-01	-2.9132	-463.17	463.12	461.69
1682	-0.30124E-01	-2.9129	-449.55	449.52	448.09
1683	0.11518E-02	-2.9126	-435.48	435.48	434.03
1684	0.42319E-01	-2.9123	-420.92	420.96	419.49
1685	0.95258E-01	-2.9121	-405.83	405.93	404.43
1686	0.16224	-2.9118	-390.20	390.36	388.84
1687	0.24611	-2.9114	-373.99	374.24	372.67
1688	0.35040	-2.9111	-357.17	357.52	355.90
1689	0.47963	-2.9108	-339.71	340.19	338.50
1690	0.63959	-2.9104	-321.58	322.22	320.46
1691	0.83795	-2.9101	-302.76	303.60	301.74
1692	1.0849	-2.9097	-283.22	284.31	282.33
1693	1.3945	-2.9093	-262.95	264.35	262.22
1694	1.7866	-2.9089	-241.93	243.71	241.40
1695	2.2899	-2.9085	-220.14	222.43	219.88
1696	2.9481	-2.9080	-197.61	200.56	197.70
1697	3.8299	-2.9076	-174.37	178.20	174.93
1698	5.0498	-2.9071	-150.49	155.54	151.72
1699	6.8097	-2.9066	-126.15	132.96	128.37
1700	9.4907	-2.9061	-101.68	111.17	105.52
1701	13.851	-2.9055	-77.815	91.665	84.542
1702	21.374	-2.9050	-56.004	77.378	68.543
1703	34.346	-2.9044	-38.499	72.845	63.091
1704	54.271	-2.9038	-26.768	81.039	72.131
1705	80.165	-2.9032	-19.799	99.964	92.678
1706	110.12	-2.9025	-15.654	125.78	119.91
1707	142.86	-2.9019	-13.018	155.88	151.08
1708	177.73	-2.9012	-11.202	188.94	184.93
1709	214.42	-2.9004	-9.8379	224.25	220.87
1710	252.77	-2.8997	-8.7176	261.49	258.63

1

***** ANSYS - ENGINEERING ANALYSIS SYSTEM RELEASE 5.7.1 *****
ANSYS/Mechanical U
00251976 VERSION=INTEL NT 11:31:46 DEC 23, 2005 CP= 1164.891

Point Beach Strainer Inner Rim Plate Analysis

***** POST1 NODAL STRESS LISTING *****

LOAD STEP= 4 SUBSTEP= 15
TIME= 4.0000 LOAD CASE= 0
SHELL NODAL RESULTS ARE AT BOTTOM

NODE	S1	S2	S3	SINT	SEQV
1711	292.82	-2.8989	-7.6658	300.48	298.13
1712	334.75	-2.8981	-6.5805	341.33	339.50
1713	379.28	-2.8972	-4.9247	384.21	383.20
1714	428.49	-2.8959	-3.2544	431.75	431.57
1715	452.36	-2.8958	-4.9354	457.30	456.28
1716	390.95	5.1302	-2.8970	393.85	389.90
1717	351.52	20.232	-2.8977	354.42	343.44
1718	329.54	32.760	-2.8981	332.44	316.12
1719	322.58	37.425	-2.8982	325.48	307.31
1720	329.82	32.479	-2.8981	332.72	316.51
1721	352.09	19.649	-2.8977	354.99	344.27
1722	391.88	4.1902	-2.8969	394.77	391.28
1723	421.46	0.44070E-01	-2.8964	424.36	422.90
1724	378.04	-1.0655	-2.8973	380.93	380.02
1725	335.65	-2.5732	-2.8982	338.55	338.39
1726	294.44	-2.8989	-4.2268	298.67	298.00
1727	254.54	-2.8997	-5.9327	260.47	258.97
1728	216.08	-2.9004	-7.7051	223.78	221.42
1729	179.19	-2.9011	-9.6373	188.83	185.55
1730	144.08	-2.9018	-11.921	156.00	151.70
1731	111.09	-2.9025	-14.914	126.00	120.45
1732	80.872	-2.9032	-19.307	100.18	93.068
1733	54.706	-2.9038	-26.416	81.122	72.293
1734	34.507	-2.9044	-38.197	72.703	62.972
1735	21.312	-2.9050	-55.730	77.042	68.236
1736	13.652	-2.9055	-77.594	91.246	84.197
1737	9.2228	-2.9061	-101.53	110.75	105.21
1738	6.5125	-2.9066	-126.06	132.57	128.12
1739	4.7475	-2.9071	-150.46	155.21	151.53
1740	3.5378	-2.9076	-174.39	177.92	174.79
1741	2.6755	-2.9080	-197.66	200.34	197.61
1742	2.0424	-2.9085	-220.22	222.26	219.83
1743	1.5670	-2.9089	-242.02	243.58	241.38
1744	1.2038	-2.9093	-263.05	264.26	262.22
1745	0.92262	-2.9097	-283.33	284.25	282.35
1746	0.70279	-2.9101	-302.86	303.57	301.78
1747	0.52961	-2.9104	-321.68	322.21	320.50
1748	0.39248	-2.9108	-339.80	340.19	338.55

1

```
***** ANSYS - ENGINEERING ANALYSIS SYSTEM  RELEASE 5.7.1   *****
ANSYS/Mechanical U
00251976          VERSION=INTEL NT      11:31:46  DEC 23, 2005 CP=   1164.891

 Point Beach Strainer Inner Rim Plate Analysis


 ***** POST1 NODAL STRESS LISTING *****

 LOAD STEP=     4  SUBSTEP=    15
  TIME=    4.0000      LOAD CASE=   0
 SHELL NODAL RESULTS ARE AT BOTTOM
```

NODE	S1	S2	S3	SINT	SEQV
1749	0.28360	-2.9111	-357.25	357.54	355.95
1750	0.19709	-2.9114	-374.07	374.27	372.72
1751	0.12849	-2.9118	-390.27	390.40	388.89
1752	0.74394E-01	-2.9121	-405.90	405.97	404.49
1753	0.32121E-01	-2.9123	-420.97	421.00	419.54
1754	-0.40847E-03	-2.9126	-435.52	435.52	434.08
1755	-0.24856E-01	-2.9129	-449.59	449.57	448.13
1756	-0.42538E-01	-2.9132	-463.20	463.15	461.73
1757	-0.54524E-01	-2.9134	-476.38	476.32	474.90
1758	-0.61677E-01	-2.9136	-489.16	489.09	487.67
1759	-0.64712E-01	-2.9139	-501.57	501.50	500.08
1760	-0.64213E-01	-2.9141	-513.64	513.58	512.16
1761	-0.60679E-01	-2.9143	-525.40	525.34	523.92
1762	-0.54524E-01	-2.9146	-536.88	536.83	535.40
1763	-0.46107E-01	-2.9148	-548.11	548.06	546.63
1764	-0.35734E-01	-2.9150	-559.11	559.07	557.64
1765	-0.23678E-01	-2.9152	-569.91	569.88	568.44
1766	-0.10171E-01	-2.9154	-580.54	580.53	579.08
1767	0.45719E-02	-2.9156	-591.02	591.03	589.57
1768	0.20365E-01	-2.9158	-601.39	601.41	599.94
1769	0.37036E-01	-2.9160	-611.66	611.69	610.22
1770	0.54432E-01	-2.9162	-621.86	621.91	620.43
1771	0.72410E-01	-2.9164	-632.02	632.09	630.60
1772	0.90843E-01	-2.9166	-642.15	642.24	640.74
1773	0.10961	-2.9168	-652.29	652.40	650.89
1774	0.12860	-2.9170	-662.45	662.58	661.06
1775	0.14772	-2.9171	-672.66	672.81	671.28
1776	0.16686	-2.9173	-682.93	683.10	681.56
1777	0.18595	-2.9175	-693.30	693.48	691.94
1778	0.20490	-2.9177	-703.77	703.98	702.42
1779	0.22363	-2.9179	-714.37	714.60	713.03
1780	0.24206	-2.9181	-725.12	725.36	723.79
1781	0.26015	-2.9184	-736.04	736.30	734.71
1782	0.27781	-2.9186	-747.13	747.41	745.82
1783	0.29498	-2.9188	-758.43	758.73	757.13
1784	0.31162	-2.9190	-769.95	770.26	768.65
1785	0.32767	-2.9192	-781.69	782.02	780.40
1786	0.34306	-2.9195	-793.69	794.03	792.40

1

```
***** ANSYS - ENGINEERING ANALYSIS SYSTEM  RELEASE 5.7.1   *****
ANSYS/Mechanical U
00251976          VERSION=INTEL NT      11:31:46  DEC 23, 2005 CP=   1164.906

 Point Beach Strainer Inner Rim Plate Analysis


 ***** POST1 NODAL STRESS LISTING *****

 LOAD STEP=     4  SUBSTEP=    15
  TIME=    4.0000      LOAD CASE=   0
 SHELL NODAL RESULTS ARE AT BOTTOM
```

NODE	S1	S2	S3	SINT	SEQV
1787	0.35775	-2.9197	-805.94	806.30	804.66
1788	0.37170	-2.9199	-818.47	818.84	817.20
1789	0.38484	-2.9202	-831.29	831.67	830.02
1790	0.39713	-2.9204	-844.40	844.80	843.15
1791	0.40851	-2.9207	-857.83	858.24	856.58
1792	0.41895	-2.9209	-871.58	872.00	870.33
1793	0.42838	-2.9212	-885.66	886.09	884.42
1794	0.43675	-2.9215	-900.08	900.52	898.84
1795	0.44399	-2.9218	-914.85	915.30	913.62
1796	0.45005	-2.9220	-929.98	930.43	928.75
1797	0.45484	-2.9223	-945.48	945.93	944.25
1798	0.45830	-2.9226	-961.34	961.80	960.11
1799	0.46031	-2.9229	-977.58	978.04	976.35
1800	0.46078	-2.9233	-994.20	994.66	992.97
1801	0.45958	-2.9236	-1011.2	1011.7	1010.0
1802	0.45657	-2.9239	-1028.6	1029.1	1027.4
1803	0.45157	-2.9243	-1046.4	1046.8	1045.2
1804	0.44439	-2.9246	-1064.6	1065.0	1063.3
1805	0.43481	-2.9250	-1083.1	1083.6	1081.9
1806	0.42255	-2.9253	-1102.1	1102.5	1100.9
1807	-2.9246	-3.5252	-1066.2	1063.3	1063.0
1808	-2.9243	-3.3711	-1048.4	1045.4	1045.2
1809	-2.9240	-3.2239	-1030.9	1028.0	1027.8
1810	-2.9236	-3.0831	-1013.8	1010.9	1010.8
1811	-2.9234	-2.9486	-997.10	994.17	994.16
1812	-2.8201	-2.9230	-980.75	977.93	977.88
1813	-2.6973	-2.9227	-964.76	962.07	961.95
1814	-2.5800	-2.9224	-949.14	946.56	946.39
1815	-2.4681	-2.9221	-933.88	931.41	931.18
1816	-2.3615	-2.9218	-918.97	916.61	916.33
1817	-2.2600	-2.9216	-904.41	902.15	901.81
1818	-2.1634	-2.9213	-890.18	888.02	887.64
1819	-2.0717	-2.9210	-876.30	874.23	873.80
1820	-1.9848	-2.9208	-862.74	860.76	860.29
1821	-1.9024	-2.9205	-849.51	847.60	847.09
1822	-1.8246	-2.9203	-836.58	834.76	834.21
1823	-1.7512	-2.9200	-823.96	822.21	821.62
1824	-1.6820	-2.9198	-811.63	809.94	809.32

1

```
***** ANSYS - ENGINEERING ANALYSIS SYSTEM  RELEASE 5.7.1   *****
ANSYS/Mechanical U
00251976          VERSION=INTEL NT      11:31:46  DEC 23, 2005 CP=   1164.922

 Point Beach Strainer Inner Rim Plate Analysis


 ***** POST1 NODAL STRESS LISTING *****

 LOAD STEP=     4  SUBSTEP=    15
  TIME=    4.0000      LOAD CASE=   0
 SHELL NODAL RESULTS ARE AT BOTTOM
```

NODE	S1	S2	S3	SINT	SEQV
1825	-1.6170	-2.9196	-799.57	797.96	797.31
1826	-1.5560	-2.9193	-787.79	786.24	785.56
1827	-1.4988	-2.9191	-776.27	774.77	774.06
1828	-1.4454	-2.9189	-764.99	763.55	762.81
1829	-1.3956	-2.9187	-753.95	752.55	751.79
1830	-1.3493	-2.9185	-743.12	741.77	740.98
1831	-1.3062	-2.9183	-732.49	731.18	730.38
1832	-1.2662	-2.9181	-722.05	720.78	719.96
1833	-1.2291	-2.9179	-711.78	710.55	709.71
1834	-1.1948	-2.9177	-701.67	700.48	699.62
1835	-1.1631	-2.9175	-691.70	690.53	689.66
1836	-1.1337	-2.9173	-681.84	680.71	679.82
1837	-1.1064	-2.9171	-672.09	670.98	670.08
1838	-1.0811	-2.9170	-662.42	661.34	660.42
1839	-1.0576	-2.9168	-652.81	651.75	650.82
1840	-1.0355	-2.9166	-643.24	642.21	641.27
1841	-1.0147	-2.9164	-633.70	632.69	631.74
1842	-0.99489	-2.9162	-624.16	623.17	622.21
1843	-0.97587	-2.9160	-614.60	613.62	612.66
1844	-0.95736	-2.9159	-604.99	604.04	603.06
1845	-0.93910	-2.9157	-595.32	594.38	593.40
1846	-0.92082	-2.9155	-585.56	584.64	583.65
1847	-0.90224	-2.9153	-575.69	574.78	573.78
1848	-0.88308	-2.9151	-565.67	564.79	563.78
1849	-0.86304	-2.9149	-555.50	554.64	553.61
1850	-0.84181	-2.9147	-545.14	544.29	543.26
1851	-0.81909	-2.9145	-534.56	533.74	532.70
1852	-0.79452	-2.9143	-523.74	522.95	521.89
1853	-0.76778	-2.9141	-512.66	511.89	510.82
1854	-0.73847	-2.9139	-501.28	500.54	499.46
1855	-0.70620	-2.9137	-489.58	488.87	487.77
1856	-0.67052	-2.9134	-477.53	476.86	475.74
1857	-0.63093	-2.9132	-465.10	464.47	463.33
1858	-0.58688	-2.9129	-452.27	451.68	450.52
1859	-0.53771	-2.9127	-439.00	438.46	437.28
1860	-0.48266	-2.9124	-425.26	424.78	423.57
1861	-0.42079	-2.9122	-411.04	410.62	409.38
1862	-0.35100	-2.9119	-396.28	395.93	394.66

1

```
***** ANSYS - ENGINEERING ANALYSIS SYSTEM  RELEASE 5.7.1   *****
ANSYS/Mechanical U
00251976          VERSION=INTEL NT      11:31:46  DEC 23, 2005 CP=   1164.938

 Point Beach Strainer Inner Rim Plate Analysis


 ***** POST1 NODAL STRESS LISTING *****

 LOAD STEP=     4  SUBSTEP=    15
  TIME=    4.0000      LOAD CASE=   0
 SHELL NODAL RESULTS ARE AT BOTTOM
```

NODE	S1	S2	S3	SINT	SEQV
1863	-0.27189	-2.9116	-380.98	380.70	379.39
1864	-0.18171	-2.9113	-365.09	364.90	363.55
1865	-0.78270E-01	-2.9110	-348.58	348.50	347.10
1866	0.41284E-01	-2.9106	-331.44	331.48	330.01
1867	0.18066	-2.9103	-313.62	313.80	312.26
1868	0.34474	-2.9099	-295.09	295.44	293.83
1869	0.54012	-2.9096	-275.84	276.38	274.68
1870	0.77580	-2.9092	-255.84	256.62	254.79
1871	1.0644	-2.9088	-235.06	236.12	234.16
1872	1.4242	-2.9084	-213.48	214.90	212.77
1873	1.8825	-2.9079	-191.10	192.98	190.63
1874	2.4823	-2.9075	-167.92	170.40	167.77
1875	3.2954	-2.9070	-143.97	147.26	144.26
1876	4.4514	-2.9065	-119.34	123.79	120.28
1877	6.2085	-2.9060	-94.260	100.47	96.235
1878	9.1450	-2.9055	-69.253	78.398	73.121
1879	14.686	-2.9049	-45.705	60.391	53.797
1880	25.955	-2.9044	-26.695	52.650	45.667
1881	45.826	-2.9038	-15.054	60.880	55.806
1882	72.536	-2.9032	-8.9759	81.512	78.652
1883	103.12	-2.9025	-5.4492	108.57	107.31
1884	136.10	-2.9011	-2.9696	139.07	139.03
1885	170.88	-0.91004	-2.9012	173.79	172.80
1886	207.21	1.0049	-2.9005	210.11	208.19
1887	244.94	2.9052	-2.8998	247.84	244.99
1888	283.98	4.8293	-2.8990	286.88	283.09
1889	324.29	6.7288	-2.8982	327.19	322.48
1890	365.87	8.4125	-2.8975	368.77	363.25
1891	-2.9242	-11.409	-1042.5	1039.5	1035.3
1892	-2.9239	-10.982	-1025.4	1022.5	1018.4
1893	-2.9235	-10.569	-1008.7	1005.7	1001.9
1894	-2.9232	-10.170	-992.29	989.36	985.76
1895	-2.9229	-9.7840	-976.27	973.35	969.93
1896	-2.9226	-9.4114	-960.61	957.68	954.46
1897	-2.9223	-9.0517	-945.29	942.37	939.32
1898	-2.9221	-8.7043	-930.33	927.41	924.53
1899	-2.9218	-8.3693	-915.70	912.78	910.07
1900	-2.9215	-8.0462	-901.42	898.50	895.95

1

```
***** ANSYS - ENGINEERING ANALYSIS SYSTEM  RELEASE 5.7.1   *****
ANSYS/Mechanical U
00251976          VERSION=INTEL NT      11:31:46  DEC 23, 2005 CP=   1164.938

 Point Beach Strainer Inner Rim Plate Analysis


 ***** POST1 NODAL STRESS LISTING *****

 LOAD STEP=     4  SUBSTEP=    15
  TIME=    4.0000      LOAD CASE=   0
 SHELL NODAL RESULTS ARE AT BOTTOM
```

NODE	S1	S2	S3	SINT	SEQV
1901	-2.9212	-7.7348	-887.47	884.55	882.15
1902	-2.9210	-7.4350	-873.85	870.93	868.68
1903	-2.9207	-7.1464	-860.55	857.63	855.52
1904	-2.9205	-6.8689	-847.56	844.64	842.67
1905	-2.9202	-6.6023	-834.88	831.96	830.13
1906	-2.9200	-6.3462	-822.50	819.58	817.87
1907	-2.9198	-6.1004	-810.41	807.49	805.90
1908	-2.9195	-5.8646	-798.60	795.68	794.21
1909	-2.9193	-5.6386	-787.05	784.13	782.78
1910	-2.9191	-5.4220	-775.77	772.85	771.60
1911	-2.9189	-5.2146	-764.73	761.81	760.67
1912	-2.9187	-5.0159	-753.93	751.01	749.96
1913	-2.9185	-4.8257	-743.35	740.43	739.48
1914	-2.9183	-4.6435	-732.98	730.06	729.20
1915	-2.9181	-4.4690	-722.80	719.88	719.11
1916	-2.9179	-4.3018	-712.80	709.88	709.19
1917	-2.9177	-4.1415	-702.97	700.05	699.44
1918	-2.9175	-3.9876	-693.28	690.37	689.83
1919	-2.9174	-3.8397	-683.73	680.81	680.35
1920	-2.9172	-3.6973	-674.29	671.37	670.98
1921	-2.9170	-3.5600	-664.95	662.03	661.71
1922	-2.9168	-3.4271	-655.69	652.77	652.52
1923	-2.9167	-3.2984	-646.49	643.57	643.38
1924	-2.9165	-3.1731	-637.33	634.41	634.28
1925	-2.9163	-3.0508	-628.19	625.27	625.20
1926	-2.9162	-2.9309	-619.05	616.13	616.13
1927	-2.8128	-2.9160	-609.89	607.08	607.03
1928	-2.6960	-2.9158	-600.69	597.99	597.88
1929	-2.5800	-2.9156	-591.43	588.85	588.68
1930	-2.4639	-2.9154	-582.07	579.61	579.39
1931	-2.3474	-2.9152	-572.62	570.27	569.98
1932	-2.2298	-2.9151	-563.02	560.79	560.45
1933	-2.1103	-2.9149	-553.28	551.16	550.76
1934	-1.9885	-2.9147	-543.35	541.36	540.89
1935	-1.8637	-2.9145	-533.21	531.35	530.82
1936	-1.7352	-2.9143	-522.84	521.11	520.52
1937	-1.6024	-2.9141	-512.22	510.62	509.96
1938	-1.4646	-2.9139	-501.32	499.85	499.13

1

```
***** ANSYS - ENGINEERING ANALYSIS SYSTEM  RELEASE 5.7.1   *****
ANSYS/Mechanical U
00251976          VERSION=INTEL NT      11:31:46  DEC 23, 2005 CP=   1164.953

 Point Beach Strainer Inner Rim Plate Analysis


 ***** POST1 NODAL STRESS LISTING *****

 LOAD STEP=     4  SUBSTEP=    15
  TIME=    4.0000      LOAD CASE=   0
 SHELL NODAL RESULTS ARE AT BOTTOM
```

NODE	S1	S2	S3	SINT	SEQV
1939	-1.3212	-2.9137	-490.10	488.78	487.98
1940	-1.1714	-2.9135	-478.55	477.38	476.51
1941	-1.0146	-2.9132	-466.63	465.62	464.67
1942	-0.84995	-2.9130	-454.32	453.47	452.45
1943	-0.67679	-2.9127	-441.60	440.92	439.81
1944	-0.49427	-2.9125	-428.42	427.93	426.72
1945	-0.30150	-2.9122	-414.77	414.47	413.17
1946	-0.97496E-01	-2.9120	-400.61	400.51	399.11
1947	0.11882	-2.9117	-385.92	386.03	384.53
1948	0.34871	-2.9114	-370.66	371.01	369.39
1949	0.59362	-2.9111	-354.80	355.40	353.66
1950	0.85530	-2.9108	-338.32	339.18	337.31
1951	1.1358	-2.9105	-321.19	322.33	320.32
1952	1.4378	-2.9101	-303.37	304.81	302.66
1953	1.7645	-2.9098	-284.84	286.60	284.29
1954	2.1202	-2.9094	-265.56	267.68	265.20
1955	2.5102	-2.9090	-245.50	248.01	245.35
1956	2.9420	-2.9086	-224.65	227.59	224.72
1957	3.4257	-2.9082	-202.97	206.39	203.30
1958	3.9760	-2.9078	-180.43	184.41	181.07
1959	4.6154	-2.9073	-157.04	161.65	158.02
1960	5.3804	-2.9068	-132.77	138.15	134.20
1961	6.3373	-2.9064	-107.66	114.00	109.67
1962	7.6239	-2.9058	-81.801	89.425	84.652
1963	9.5894	-2.9053	-55.500	65.090	59.829
1964	13.391	-2.9048	-29.867	43.258	37.840
1965	23.417	-2.9042	-9.2439	32.661	29.998
1966	45.393	0.69592	-2.9037	48.297	46.601
1967	74.472	4.8506	-2.9030	77.375	73.804
1968	106.47	7.4569	-2.9024	109.37	104.58
1969	140.29	9.6667	-2.9017	143.19	137.34
1970	175.63	11.841	-2.9011	178.53	171.63
1971	212.38	14.127	-2.9003	215.28	207.29
1972	250.54	16.607	-2.8996	253.44	244.27
1973	290.11	19.332	-2.8989	293.01	282.55
1974	331.08	22.389	-2.8981	333.98	322.08
1975	-2.9239	-18.364	-1029.2	1026.2	1018.6
1976	-2.9236	-17.705	-1012.5	1009.6	1002.3

1

```
***** ANSYS - ENGINEERING ANALYSIS SYSTEM  RELEASE 5.7.1   *****
ANSYS/Mechanical U
00251976          VERSION=INTEL NT      11:31:47  DEC 23, 2005 CP=   1164.953

 Point Beach Strainer Inner Rim Plate Analysis


 ***** POST1 NODAL STRESS LISTING *****

 LOAD STEP=     4  SUBSTEP=    15
  TIME=    4.0000      LOAD CASE=   0
 SHELL NODAL RESULTS ARE AT BOTTOM
```

NODE	S1	S2	S3	SINT	SEQV
1977	-2.9233	-17.066	-996.18	993.25	986.26
1978	-2.9230	-16.446	-980.21	977.29	970.59
1979	-2.9227	-15.846	-964.59	961.66	955.27
1980	-2.9224	-15.263	-949.31	946.38	940.27
1981	-2.9221	-14.700	-934.37	931.45	925.61
1982	-2.9219	-14.154	-919.77	916.85	911.28
1983	-2.9216	-13.625	-905.50	902.58	897.28
1984	-2.9213	-13.114	-891.57	888.65	883.60
1985	-2.9211	-12.620	-877.96	875.04	870.23
1986	-2.9208	-12.142	-864.68	861.75	857.18
1987	-2.9206	-11.681	-851.70	848.78	844.44
1988	-2.9203	-11.235	-839.04	836.12	831.99
1989	-2.9201	-10.806	-826.67	823.75	819.83
1990	-2.9199	-10.391	-814.59	811.67	807.96
1991	-2.9196	-9.9918	-802.80	799.88	796.37
1992	-2.9194	-9.6067	-791.28	788.36	785.04
1993	-2.9192	-9.2357	-780.02	777.10	773.97
1994	-2.9190	-8.8782	-769.02	766.10	763.14
1995	-2.9188	-8.5339	-758.26	755.34	752.54
1996	-2.9186	-8.2022	-747.72	744.80	742.17
1997	-2.9184	-7.8826	-737.40	734.48	732.01
1998	-2.9182	-7.5745	-727.29	724.37	722.05
1999	-2.9180	-7.2774	-717.36	714.45	712.28
2000	-2.9178	-6.9907	-707.61	704.70	702.67
2001	-2.9176	-6.7137	-698.03	695.11	693.22
2002	-2.9175	-6.4459	-688.58	685.66	683.91
2003	-2.9173	-6.1864	-679.27	676.35	674.72
2004	-2.9171	-5.9347	-670.06	667.15	665.64
2005	-2.9169	-5.6901	-660.96	658.04	656.66
2006	-2.9168	-5.4517	-651.93	649.01	647.74
2007	-2.9166	-5.2188	-642.95	640.04	638.89
2008	-2.9164	-4.9906	-634.02	631.11	630.07
2009	-2.9162	-4.7664	-625.11	622.19	621.27
2010	-2.9161	-4.5454	-616.20	613.28	612.47
2011	-2.9159	-4.3265	-607.27	604.35	603.65
2012	-2.9157	-4.1091	-598.30	595.38	594.79
2013	-2.9156	-3.8923	-589.27	586.35	585.86
2014	-2.9154	-3.6750	-580.15	577.23	576.86

1

```
***** ANSYS - ENGINEERING ANALYSIS SYSTEM  RELEASE 5.7.1   *****
ANSYS/Mechanical U
00251976          VERSION=INTEL NT      11:31:47  DEC 23, 2005 CP=   1164.969

 Point Beach Strainer Inner Rim Plate Analysis


 ***** POST1 NODAL STRESS LISTING *****

 LOAD STEP=     4  SUBSTEP=    15
  TIME=    4.0000      LOAD CASE=   0
 SHELL NODAL RESULTS ARE AT BOTTOM
```

NODE	S1	S2	S3	SINT	SEQV
2015	-2.9152	-3.4565	-570.93	568.01	567.74
2016	-2.9150	-3.2359	-561.57	558.66	558.50
2017	-2.9149	-3.0121	-552.07	549.15	549.10
2018	-2.7843	-2.9147	-542.39	539.60	539.54
2019	-2.5514	-2.9145	-532.50	529.95	529.77
2020	-2.3126	-2.9143	-522.39	520.08	519.78
2021	-2.0668	-2.9141	-512.03	509.97	509.54
2022	-1.8131	-2.9139	-501.40	499.58	499.03
2023	-1.5505	-2.9137	-490.46	488.91	488.23
2024	-1.2779	-2.9135	-479.19	477.91	477.09
2025	-0.99443	-2.9132	-467.56	466.57	465.61
2026	-0.69895	-2.9130	-455.56	454.86	453.76
2027	-0.39043	-2.9128	-443.14	442.75	441.49
2028	-0.67790E-01	-2.9125	-430.28	430.22	428.80
2029	0.27010	-2.9123	-416.96	417.23	415.65
2030	0.62440	-2.9120	-403.14	403.77	402.01
2031	0.99636	-2.9117	-388.80	389.80	387.86
2032	1.3873	-2.9115	-373.91	375.29	373.16
2033	1.7986	-2.9112	-358.43	360.23	357.90
2034	2.2320	-2.9109	-342.34	344.57	342.03
2035	2.6890	-2.9105	-325.60	328.29	325.53
2036	3.1718	-2.9102	-308.19	311.37	308.37
2037	3.6826	-2.9099	-290.08	293.76	290.52
2038	4.2240	-2.9095	-271.24	275.46	271.96
2039	4.7994	-2.9091	-251.62	256.42	252.66
2040	5.4125	-2.9087	-231.21	236.63	232.58
2041	6.0681	-2.9083	-209.98	216.05	211.70
2042	6.7724	-2.9079	-187.89	194.66	190.00
2043	7.5332	-2.9075	-164.91	172.44	167.46
2044	8.3618	-2.9070	-141.01	149.37	144.07
2045	9.2747	-2.9065	-116.18	125.45	119.83
2046	10.300	-2.9061	-90.390	100.69	94.780
2047	11.498	-2.9055	-63.666	75.163	69.097
2048	13.036	-2.9050	-36.125	49.162	43.443
2049	15.813	-2.9043	-8.6157	24.429	22.133
2050	28.796	9.9518	-2.9039	31.700	27.616
2051	57.412	14.209	-2.9033	60.315	53.839
2052	89.390	16.497	-2.9027	92.292	84.284

1

```
***** ANSYS - ENGINEERING ANALYSIS SYSTEM  RELEASE 5.7.1   *****
ANSYS/Mechanical U
00251976          VERSION=INTEL NT      11:31:47  DEC 23, 2005 CP=   1164.969

 Point Beach Strainer Inner Rim Plate Analysis


 ***** POST1 NODAL STRESS LISTING *****

 LOAD STEP=     4  SUBSTEP=    15
  TIME=    4.0000      LOAD CASE=   0
 SHELL NODAL RESULTS ARE AT BOTTOM
```

NODE	S1	S2	S3	SINT	SEQV
2053	122.98	18.646	-2.9020	125.88	116.61
2054	157.97	20.947	-2.9014	160.87	150.37
2055	194.36	23.526	-2.9007	197.26	185.47
2056	232.18	26.476	-2.8999	235.08	221.86
2057	271.47	29.957	-2.8992	274.37	259.51
2058	312.24	34.233	-2.8984	315.14	298.31
2059	-2.9239	-21.052	-1024.9	1022.0	1013.0
2060	-2.9235	-20.304	-1008.4	1005.4	996.86
2061	-2.9232	-19.578	-992.17	989.25	981.03
2062	-2.9229	-18.874	-976.33	973.41	965.53
2063	-2.9226	-18.191	-960.83	957.91	950.37
2064	-2.9223	-17.528	-945.67	942.75	935.53
2065	-2.9221	-16.886	-930.86	927.93	921.03
2066	-2.9218	-16.264	-916.38	913.45	906.86
2067	-2.9215	-15.661	-902.23	899.31	893.00
2068	-2.9213	-15.078	-888.41	885.48	879.47
2069	-2.9210	-14.513	-874.91	871.99	866.25
2070	-2.9208	-13.967	-861.73	858.81	853.34
2071	-2.9205	-13.439	-848.86	845.94	840.73
2072	-2.9203	-12.929	-836.30	833.38	828.42
2073	-2.9200	-12.436	-824.03	821.11	816.39
2074	-2.9198	-11.960	-812.05	809.13	804.65
2075	-2.9196	-11.501	-800.36	797.44	793.18
2076	-2.9194	-11.058	-788.93	786.01	781.97
2077	-2.9192	-10.631	-777.76	774.84	771.02
2078	-2.9189	-10.218	-766.85	763.93	760.31
2079	-2.9187	-9.8206	-756.17	753.25	749.83
2080	-2.9185	-9.4370	-745.73	742.81	739.57
2081	-2.9183	-9.0668	-735.49	732.57	729.52
2082	-2.9182	-8.7095	-725.46	722.54	719.66
2083	-2.9180	-8.3643	-715.62	712.70	709.99
2084	-2.9178	-8.0306	-705.95	703.03	700.49
2085	-2.9176	-7.7077	-696.44	693.52	691.14
2086	-2.9174	-7.3949	-687.07	684.15	681.93
2087	-2.9172	-7.0915	-677.83	674.92	672.84
2088	-2.9171	-6.7965	-668.71	665.79	663.86
2089	-2.9169	-6.5094	-659.67	656.76	654.97
2090	-2.9167	-6.2291	-650.72	647.80	646.15

1

```
***** ANSYS - ENGINEERING ANALYSIS SYSTEM  RELEASE 5.7.1   *****
ANSYS/Mechanical U
00251976          VERSION=INTEL NT      11:31:47  DEC 23, 2005 CP=   1164.984

 Point Beach Strainer Inner Rim Plate Analysis


 ***** POST1 NODAL STRESS LISTING *****

 LOAD STEP=     4  SUBSTEP=    15
  TIME=    4.0000      LOAD CASE=   0
 SHELL NODAL RESULTS ARE AT BOTTOM
```

NODE	S1	S2	S3	SINT	SEQV
2091	-2.9166	-5.9549	-641.82	638.90	637.39
2092	-2.9164	-5.6859	-632.96	630.05	628.67
2093	-2.9162	-5.4211	-624.13	621.21	619.96
2094	-2.9161	-5.1597	-615.29	612.37	611.25
2095	-2.9159	-4.9007	-606.43	603.52	602.53
2096	-2.9157	-4.6431	-597.54	594.62	593.76
2097	-2.9156	-4.3860	-588.58	585.66	584.93
2098	-2.9154	-4.1283	-579.54	576.62	576.02
2099	-2.9152	-3.8690	-570.39	567.47	567.00
2100	-2.9150	-3.6071	-561.11	558.20	557.85
2101	-2.9148	-3.3415	-551.69	548.77	548.56
2102	-2.9147	-3.0711	-542.08	539.17	539.09
2103	-2.7949	-2.9145	-532.28	529.49	529.43
2104	-2.5117	-2.9143	-522.26	519.74	519.54
2105	-2.2203	-2.9141	-511.98	509.76	509.41
2106	-1.9198	-2.9139	-501.43	499.51	499.01
2107	-1.6089	-2.9137	-490.58	488.97	488.32
2108	-1.2864	-2.9135	-479.40	478.12	477.31
2109	-0.95118	-2.9133	-467.88	466.92	465.95
2110	-0.60203	-2.9130	-455.97	455.36	454.21
2111	-0.23772	-2.9128	-443.65	443.41	442.08
2112	0.14301	-2.9125	-430.90	431.04	429.52
2113	0.54144	-2.9123	-417.68	418.22	416.51
2114	0.95890	-2.9120	-403.98	404.93	403.01
2115	1.3968	-2.9118	-389.75	391.14	389.01
2116	1.8564	-2.9115	-374.97	376.83	374.47
2117	2.3395	-2.9112	-359.62	361.96	359.36
2118	2.8475	-2.9109	-343.65	346.50	343.66
2119	3.3821	-2.9106	-327.05	330.43	327.33
2120	3.9453	-2.9102	-309.78	313.72	310.35
2121	4.5390	-2.9099	-291.81	296.34	292.69
2122	5.1656	-2.9095	-273.10	278.27	274.32
2123	5.8274	-2.9092	-253.64	259.47	255.21
2124	6.5274	-2.9088	-233.38	239.91	235.34
2125	7.2687	-2.9084	-212.30	219.57	214.66
2126	8.0549	-2.9080	-190.36	198.42	193.17
2127	8.8903	-2.9075	-167.54	176.43	170.83
2128	9.7797	-2.9071	-143.79	153.57	147.63

1

```
***** ANSYS - ENGINEERING ANALYSIS SYSTEM  RELEASE 5.7.1   *****
ANSYS/Mechanical U
00251976          VERSION=INTEL NT      11:31:47  DEC 23, 2005 CP=   1164.984

 Point Beach Strainer Inner Rim Plate Analysis


 ***** POST1 NODAL STRESS LISTING *****

 LOAD STEP=     4  SUBSTEP=    15
  TIME=    4.0000      LOAD CASE=   0
 SHELL NODAL RESULTS ARE AT BOTTOM
```

NODE	S1	S2	S3	SINT	SEQV
2129	10.729	-2.9066	-119.08	129.81	123.56
2130	11.746	-2.9061	-93.381	105.13	98.621
2131	12.838	-2.9056	-66.658	79.496	72.910
2132	14.017	-2.9051	-38.874	52.890	46.784
2133	15.297	-2.9044	-9.9908	25.288	22.594
2134	20.040	16.688	-2.9040	22.944	21.465
2135	51.228	18.243	-2.9034	54.131	47.251
2136	83.640	19.973	-2.9028	86.543	77.674
2137	117.31	21.936	-2.9021	120.21	109.92
2138	152.28	24.204	-2.9015	155.18	143.56
2139	188.61	26.868	-2.9008	191.51	178.49
2140	226.35	30.060	-2.9000	229.25	214.68
2141	265.56	33.913	-2.8993	268.46	252.08
2142	306.28	38.768	-2.8985	309.17	290.59
2143	-2.9239	-18.365	-1029.2	1026.2	1018.6
2144	-2.9236	-17.706	-1012.5	1009.6	1002.3
2145	-2.9233	-17.067	-996.18	993.25	986.26
2146	-2.9230	-16.447	-980.21	977.29	970.59
2147	-2.9227	-15.846	-964.59	961.66	955.27
2148	-2.9224	-15.264	-949.31	946.38	940.27
2149	-2.9221	-14.700	-934.37	931.45	925.61
2150	-2.9219	-14.154	-919.77	916.85	911.28
2151	-2.9216	-13.625	-905.50	902.58	897.28
2152	-2.9213	-13.114	-891.57	888.65	883.60
2153	-2.9211	-12.619	-877.96	875.04	870.23
2154	-2.9208	-12.142	-864.68	861.76	857.18
2155	-2.9206	-11.680	-851.70	848.78	844.44
2156	-2.9203	-11.235	-839.04	836.12	831.99
2157	-2.9201	-10.805	-826.67	823.75	819.84
2158	-2.9199	-10.390	-814.59	811.67	807.96
2159	-2.9196	-9.9908	-802.80	799.88	796.37
2160	-2.9194	-9.6057	-791.28	788.36	785.04
2161	-2.9192	-9.2347	-780.02	777.10	773.97
2162	-2.9190	-8.8773	-769.02	766.10	763.14
2163	-2.9188	-8.5330	-758.26	755.34	752.55
2164	-2.9186	-8.2013	-747.72	744.80	742.17
2165	-2.9184	-7.8818	-737.40	734.48	732.02
2166	-2.9182	-7.5739	-727.29	724.37	722.05

1

```
***** ANSYS - ENGINEERING ANALYSIS SYSTEM  RELEASE 5.7.1   *****
ANSYS/Mechanical U
00251976          VERSION=INTEL NT      11:31:47  DEC 23, 2005 CP=   1164.984

 Point Beach Strainer Inner Rim Plate Analysis


 ***** POST1 NODAL STRESS LISTING *****

 LOAD STEP=     4  SUBSTEP=    15
  TIME=    4.0000      LOAD CASE=   0
 SHELL NODAL RESULTS ARE AT BOTTOM
```

NODE	S1	S2	S3	SINT	SEQV
2167	-2.9180	-7.2769	-717.36	714.45	712.28
2168	-2.9178	-6.9904	-707.61	704.70	702.67
2169	-2.9176	-6.7136	-698.03	695.11	693.22
2170	-2.9175	-6.4460	-688.58	685.66	683.91
2171	-2.9173	-6.1869	-679.27	676.35	674.72
2172	-2.9171	-5.9355	-670.06	667.15	665.64
2173	-2.9169	-5.6912	-660.96	658.04	656.66
2174	-2.9168	-5.4533	-651.93	649.01	647.74
2175	-2.9166	-5.2210	-642.95	640.04	638.89
2176	-2.9164	-4.9934	-634.02	631.11	630.07
2177	-2.9162	-4.7699	-625.11	622.19	621.27
2178	-2.9161	-4.5496	-616.20	613.28	612.47
2179	-2.9159	-4.3316	-607.27	604.35	603.65
2180	-2.9157	-4.1151	-598.30	595.38	594.78
2181	-2.9156	-3.8992	-589.27	586.35	585.86
2182	-2.9154	-3.6831	-580.15	577.23	576.85
2183	-2.9152	-3.4657	-570.93	568.01	567.74
2184	-2.9150	-3.2462	-561.57	558.66	558.49
2185	-2.9149	-3.0236	-552.07	549.15	549.10
2186	-2.7970	-2.9147	-542.38	539.59	539.53
2187	-2.5652	-2.9145	-532.50	529.93	529.76
2188	-2.3274	-2.9143	-522.39	520.06	519.77
2189	-2.0825	-2.9141	-512.03	509.95	509.53
2190	-1.8294	-2.9139	-501.39	499.56	499.02
2191	-1.5671	-2.9137	-490.45	488.89	488.21
2192	-1.2945	-2.9135	-479.18	477.89	477.08
2193	-1.0105	-2.9132	-467.56	466.55	465.60
2194	-0.71388	-2.9130	-455.55	454.84	453.74
2195	-0.40350	-2.9128	-443.14	442.73	441.48
2196	-0.78159E-01	-2.9125	-430.28	430.20	428.79
2197	0.26340	-2.9123	-416.96	417.22	415.64
2198	0.62249	-2.9120	-403.14	403.76	402.01
2199	1.0005	-2.9117	-388.80	389.80	387.86
2200	1.3987	-2.9115	-373.90	375.30	373.17
2201	1.8188	-2.9112	-358.43	360.25	357.90
2202	2.2624	-2.9109	-342.34	344.60	342.04
2203	2.7311	-2.9105	-325.61	328.34	325.55
2204	3.2269	-2.9102	-308.20	311.43	308.41

1

```
***** ANSYS - ENGINEERING ANALYSIS SYSTEM  RELEASE 5.7.1   *****
ANSYS/Mechanical U
00251976          VERSION=INTEL NT      11:31:47  DEC 23, 2005 CP=   1165.000

 Point Beach Strainer Inner Rim Plate Analysis


 ***** POST1 NODAL STRESS LISTING *****

 LOAD STEP=     4  SUBSTEP=    15
  TIME=    4.0000      LOAD CASE=   0
 SHELL NODAL RESULTS ARE AT BOTTOM
```

NODE	S1	S2	S3	SINT	SEQV
2205	3.7519	-2.9099	-290.10	293.85	290.57
2206	4.3084	-2.9095	-271.26	275.56	272.03
2207	4.8991	-2.9091	-251.65	256.55	252.74
2208	5.5271	-2.9087	-231.25	236.78	232.68
2209	6.1961	-2.9083	-210.03	216.22	211.82
2210	6.9108	-2.9079	-187.95	194.86	190.14
2211	7.6771	-2.9075	-164.98	172.66	167.62
2212	8.5036	-2.9070	-141.10	149.60	144.24
2213	9.4035	-2.9065	-116.28	125.68	120.00
2214	10.400	-2.9061	-90.507	100.91	94.956
2215	11.546	-2.9055	-63.786	75.332	69.247
2216	12.995	-2.9050	-36.231	49.226	43.512
2217	15.599	-2.9043	-8.6408	24.240	21.942
2218	28.428	9.9706	-2.9039	31.332	27.277
2219	57.175	13.973	-2.9033	60.079	53.669
2220	89.241	16.045	-2.9027	92.144	84.283
2221	122.92	17.988	-2.9020	125.82	116.78
2222	158.00	20.119	-2.9014	160.90	150.72
2223	194.45	22.628	-2.9007	197.35	185.91
2224	232.26	25.703	-2.8999	235.16	222.24
2225	271.54	29.577	-2.8992	274.44	259.73
2226	312.30	34.222	-2.8984	315.20	298.38
2227	-2.9242	-11.409	-1042.5	1039.5	1035.3
2228	-2.9239	-10.983	-1025.4	1022.5	1018.4
2229	-2.9235	-10.570	-1008.7	1005.7	1001.9
2230	-2.9232	-10.171	-992.29	989.36	985.76
2231	-2.9229	-9.7854	-976.27	973.35	969.93
2232	-2.9226	-9.4126	-960.61	957.68	954.46
2233	-2.9223	-9.0525	-945.29	942.37	939.32
2234	-2.9221	-8.7048	-930.33	927.41	924.53
2235	-2.9218	-8.3694	-915.71	912.78	910.07
2236	-2.9215	-8.0459	-901.42	898.50	895.95
2237	-2.9212	-7.7343	-887.47	884.55	882.15
2238	-2.9210	-7.4341	-873.85	870.93	868.68
2239	-2.9207	-7.1453	-860.55	857.63	855.52
2240	-2.9205	-6.8677	-847.56	844.64	842.67
2241	-2.9202	-6.6008	-834.88	831.96	830.13
2242	-2.9200	-6.3446	-822.50	819.58	817.87

1

```
***** ANSYS - ENGINEERING ANALYSIS SYSTEM  RELEASE 5.7.1   *****
ANSYS/Mechanical U
00251976          VERSION=INTEL NT      11:31:47  DEC 23, 2005 CP=   1165.016

 Point Beach Strainer Inner Rim Plate Analysis


 ***** POST1 NODAL STRESS LISTING *****

 LOAD STEP=     4  SUBSTEP=    15
  TIME=    4.0000      LOAD CASE=   0
 SHELL NODAL RESULTS ARE AT BOTTOM
```

NODE	S1	S2	S3	SINT	SEQV
2243	-2.9198	-6.0988	-810.41	807.49	805.90
2244	-2.9195	-5.8630	-798.60	795.68	794.21
2245	-2.9193	-5.6370	-787.05	784.13	782.78
2246	-2.9191	-5.4204	-775.77	772.85	771.60
2247	-2.9189	-5.2131	-764.73	761.81	760.67
2248	-2.9187	-5.0145	-753.93	751.01	749.97
2249	-2.9185	-4.8244	-743.35	740.43	739.48
2250	-2.9183	-4.6425	-732.98	730.06	729.20
2251	-2.9181	-4.4682	-722.80	719.88	719.11
2252	-2.9179	-4.3013	-712.80	709.88	709.19
2253	-2.9177	-4.1414	-702.97	700.05	699.44
2254	-2.9175	-3.9879	-693.28	690.37	689.83
2255	-2.9174	-3.8405	-683.73	680.81	680.35
2256	-2.9172	-3.6987	-674.29	671.37	670.98
2257	-2.9170	-3.5621	-664.95	662.03	661.71
2258	-2.9168	-3.4300	-655.69	652.77	652.52
2259	-2.9167	-3.3022	-646.49	643.57	643.38
2260	-2.9165	-3.1779	-637.33	634.41	634.28
2261	-2.9163	-3.0568	-628.19	625.27	625.20
2262	-2.9161	-2.9381	-619.05	616.13	616.12
2263	-2.8215	-2.9160	-609.89	607.07	607.02
2264	-2.7063	-2.9158	-600.69	597.98	597.88
2265	-2.5919	-2.9156	-591.42	588.83	588.67
2266	-2.4776	-2.9154	-582.07	579.60	579.38
2267	-2.3630	-2.9152	-572.61	570.25	569.98
2268	-2.2472	-2.9151	-563.02	560.77	560.44
2269	-2.1297	-2.9149	-553.27	551.14	550.75
2270	-2.0098	-2.9147	-543.34	541.33	540.88
2271	-1.8867	-2.9145	-533.21	531.32	530.81
2272	-1.7598	-2.9143	-522.84	521.08	520.50
2273	-1.6282	-2.9141	-512.22	510.59	509.95
2274	-1.4913	-2.9139	-501.31	499.82	499.11
2275	-1.3481	-2.9137	-490.09	488.74	487.96
2276	-1.1980	-2.9135	-478.54	477.34	476.48
2277	-1.0399	-2.9132	-466.62	465.58	464.65
2278	-0.87292	-2.9130	-454.31	453.44	452.42
2279	-0.69616	-2.9127	-441.58	440.89	439.78
2280	-0.50856	-2.9125	-428.41	427.90	426.70

1

```
***** ANSYS - ENGINEERING ANALYSIS SYSTEM  RELEASE 5.7.1   *****
ANSYS/Mechanical U
00251976          VERSION=INTEL NT      11:31:47  DEC 23, 2005 CP=   1165.016

 Point Beach Strainer Inner Rim Plate Analysis


 ***** POST1 NODAL STRESS LISTING *****

 LOAD STEP=     4  SUBSTEP=    15
  TIME=    4.0000      LOAD CASE=   0
 SHELL NODAL RESULTS ARE AT BOTTOM
```

NODE	S1	S2	S3	SINT	SEQV
2281	-0.30899	-2.9122	-414.75	414.44	413.15
2282	-0.96283E-01	-2.9120	-400.59	400.50	399.10
2283	0.13088	-2.9117	-385.90	386.03	384.52
2284	0.37391	-2.9114	-370.64	371.02	369.38
2285	0.63440	-2.9111	-354.79	355.42	353.66
2286	0.91416	-2.9108	-338.31	339.23	337.33
2287	1.2153	-2.9105	-321.18	322.40	320.36
2288	1.5401	-2.9101	-303.37	304.91	302.71
2289	1.8916	-2.9098	-284.85	286.74	284.37
2290	2.2733	-2.9094	-265.58	267.85	265.30
2291	2.6899	-2.9090	-245.54	248.23	245.48
2292	3.1473	-2.9086	-224.70	227.85	224.89
2293	3.6540	-2.9082	-203.05	206.70	203.50
2294	4.2220	-2.9078	-180.54	184.76	181.30
2295	4.8705	-2.9073	-157.17	162.04	158.30
2296	5.6317	-2.9068	-132.94	138.57	134.50
2297	6.5658	-2.9064	-107.87	114.43	110.00
2298	7.8029	-2.9059	-82.042	89.845	84.998
2299	9.6800	-2.9053	-55.769	65.449	60.152
2300	13.332	-2.9048	-30.136	43.468	38.044
2301	23.140	-2.9042	-9.4809	32.621	29.880
2302	45.008	0.34466	-2.9037	47.912	46.373
2303	74.105	4.2329	-2.9030	77.008	73.699
2304	106.18	6.4998	-2.9024	109.09	104.70
2305	140.15	8.3302	-2.9017	143.05	137.78
2306	175.69	10.138	-2.9010	178.60	172.45
2307	212.68	12.175	-2.9003	215.58	208.45
2308	250.99	14.699	-2.8996	253.89	245.56
2309	290.41	17.975	-2.8988	293.31	283.45
2310	331.33	22.436	-2.8981	334.23	322.31
2311	-2.9246	-3.5261	-1066.2	1063.3	1063.0
2312	-2.9243	-3.3727	-1048.4	1045.4	1045.2
2313	-2.9240	-3.2259	-1030.9	1028.0	1027.8
2314	-2.9236	-3.0854	-1013.8	1010.9	1010.8
2315	-2.9234	-2.9507	-997.10	994.17	994.16
2316	-2.8220	-2.9230	-980.75	977.93	977.88
2317	-2.6988	-2.9227	-964.77	962.07	961.96
2318	-2.5811	-2.9224	-949.14	946.56	946.39

1

```
***** ANSYS - ENGINEERING ANALYSIS SYSTEM  RELEASE 5.7.1   *****
ANSYS/Mechanical U
00251976          VERSION=INTEL NT      11:31:47  DEC 23, 2005 CP=   1165.031

 Point Beach Strainer Inner Rim Plate Analysis


 ***** POST1 NODAL STRESS LISTING *****

 LOAD STEP=     4  SUBSTEP=    15
  TIME=    4.0000      LOAD CASE=   0
 SHELL NODAL RESULTS ARE AT BOTTOM
```

NODE	S1	S2	S3	SINT	SEQV
2319	-2.4688	-2.9221	-933.88	931.41	931.18
2320	-2.3618	-2.9218	-918.97	916.61	916.33
2321	-2.2598	-2.9216	-904.41	902.15	901.82
2322	-2.1629	-2.9213	-890.19	888.02	887.64
2323	-2.0709	-2.9210	-876.30	874.23	873.81
2324	-1.9837	-2.9208	-862.74	860.76	860.29
2325	-1.9011	-2.9205	-849.51	847.61	847.10
2326	-1.8232	-2.9203	-836.58	834.76	834.21
2327	-1.7496	-2.9200	-823.96	822.21	821.62
2328	-1.6804	-2.9198	-811.63	809.95	809.33
2329	-1.6154	-2.9196	-799.57	797.96	797.31
2330	-1.5544	-2.9193	-787.79	786.24	785.56
2331	-1.4973	-2.9191	-776.27	774.77	774.06
2332	-1.4441	-2.9189	-764.99	763.55	762.81
2333	-1.3944	-2.9187	-753.95	752.55	751.79
2334	-1.3483	-2.9185	-743.12	741.77	740.98
2335	-1.3055	-2.9183	-732.49	731.18	730.38
2336	-1.2659	-2.9181	-722.05	720.78	719.96
2337	-1.2292	-2.9179	-711.78	710.55	709.71
2338	-1.1954	-2.9177	-701.67	700.48	699.62
2339	-1.1642	-2.9175	-691.70	690.53	689.66
2340	-1.1355	-2.9173	-681.84	680.71	679.82
2341	-1.1091	-2.9171	-672.09	670.98	670.08
2342	-1.0847	-2.9170	-662.42	661.33	660.42
2343	-1.0621	-2.9168	-652.81	651.75	650.82
2344	-1.0411	-2.9166	-643.25	642.21	641.27
2345	-1.0216	-2.9164	-633.70	632.68	631.74
2346	-1.0031	-2.9162	-624.16	623.16	622.21
2347	-0.98561	-2.9160	-614.60	613.61	612.65
2348	-0.96870	-2.9159	-604.99	604.03	603.05
2349	-0.95213	-2.9157	-595.32	594.37	593.39
2350	-0.93562	-2.9155	-585.56	584.63	583.64
2351	-0.91885	-2.9153	-575.69	574.77	573.77
2352	-0.90149	-2.9151	-565.67	564.77	563.77
2353	-0.88319	-2.9149	-555.50	554.61	553.60
2354	-0.86359	-2.9147	-545.13	544.27	543.25
2355	-0.84226	-2.9145	-534.55	533.71	532.68
2356	-0.81880	-2.9143	-523.73	522.92	521.87

1

```
***** ANSYS - ENGINEERING ANALYSIS SYSTEM  RELEASE 5.7.1   *****
ANSYS/Mechanical U
00251976          VERSION=INTEL NT      11:31:47  DEC 23, 2005 CP=   1165.063

 Point Beach Strainer Inner Rim Plate Analysis


 ***** POST1 NODAL STRESS LISTING *****

 LOAD STEP=     4  SUBSTEP=    15
  TIME=    4.0000      LOAD CASE=   0
 SHELL NODAL RESULTS ARE AT BOTTOM
```

NODE	S1	S2	S3	SINT	SEQV
2357	-0.79271	-2.9141	-512.65	511.86	510.80
2358	-0.76350	-2.9139	-501.27	500.50	499.43
2359	-0.73061	-2.9137	-489.56	488.83	487.75
2360	-0.69340	-2.9134	-477.51	476.82	475.71
2361	-0.65120	-2.9132	-465.08	464.43	463.30
2362	-0.60323	-2.9129	-452.24	451.64	450.49
2363	-0.54862	-2.9127	-438.97	438.42	437.24
2364	-0.48636	-2.9124	-425.23	424.75	423.54
2365	-0.41531	-2.9122	-411.00	410.58	409.34
2366	-0.33412	-2.9119	-396.24	395.91	394.63
2367	-0.24120	-2.9116	-380.93	380.69	379.37
2368	-0.13465	-2.9113	-365.04	364.91	363.53
2369	-0.12171E-01	-2.9110	-348.54	348.53	347.09
2370	0.12909	-2.9106	-331.39	331.52	330.01
2371	0.29272	-2.9103	-313.58	313.87	312.28
2372	0.48332	-2.9099	-295.06	295.54	293.86
2373	0.70694	-2.9096	-275.82	276.53	274.74
2374	0.97179	-2.9092	-255.83	256.80	254.88
2375	1.2893	-2.9088	-235.07	236.36	234.28
2376	1.6759	-2.9084	-213.51	215.19	212.93
2377	2.1568	-2.9079	-191.16	193.32	190.84
2378	2.7716	-2.9075	-168.02	170.79	168.02
2379	3.5878	-2.9070	-144.12	147.71	144.57
2380	4.7291	-2.9065	-119.55	124.28	120.64
2381	6.4448	-2.9060	-94.520	100.97	96.630
2382	9.2990	-2.9055	-69.568	78.867	73.528
2383	14.692	-2.9050	-46.054	60.746	54.137
2384	25.729	-2.9044	-27.047	52.775	45.760
2385	45.368	-2.9038	-15.465	60.832	55.626
2386	71.931	-2.9032	-9.5883	81.520	78.391
2387	102.44	-2.9025	-6.3901	108.83	107.13
2388	135.43	-2.9019	-4.3421	139.77	139.06
2389	170.33	-2.8003	-2.9016	173.23	173.18
2390	206.93	-1.4498	-2.9005	209.83	209.11
2391	245.16	-0.75099E-01	-2.8998	248.06	246.66
2392	284.98	1.5327	-2.8990	287.88	285.69
2393	326.15	3.6972	-2.8982	329.05	325.80
2394	367.30	6.7187	-2.8974	370.20	365.48

1

```
***** ANSYS - ENGINEERING ANALYSIS SYSTEM  RELEASE 5.7.1   *****
ANSYS/Mechanical U
00251976          VERSION=INTEL NT      11:31:47  DEC 23, 2005 CP=   1165.063

 Point Beach Strainer Inner Rim Plate Analysis


 ***** POST1 NODAL STRESS LISTING *****

 LOAD STEP=     4  SUBSTEP=    15
  TIME=    4.0000      LOAD CASE=   0
 SHELL NODAL RESULTS ARE AT BOTTOM
```

NODE	S1	S2	S3	SINT	SEQV
2395	1.1754	-2.9271	-1197.8	1199.0	1197.0
2396	477.67	-2.8953	-4.0754	481.75	481.16
2397	530.49	-2.8039	-2.8944	533.38	533.34
2398	577.33	-1.2190	-2.8934	580.22	579.39
2399	620.54	-0.22332	-2.8926	623.43	622.10
2400	660.99	0.59858	-2.8918	663.88	662.14
2401	698.98	1.2490	-2.8911	701.87	699.81
2402	734.65	1.7858	-2.8904	737.54	735.21
2403	768.06	2.2299	-2.8898	770.95	768.41
2404	799.25	2.5999	-2.8892	802.14	799.41
2405	828.24	2.9082	-2.8886	831.13	828.25
2406	855.06	3.1648	-2.8881	857.95	854.94
2407	879.74	3.3772	-2.8876	882.63	879.51
2408	902.30	3.5516	-2.8872	905.19	901.98
2409	922.77	3.6931	-2.8868	925.66	922.39
2410	941.20	3.8056	-2.8864	944.08	940.75
2411	957.60	3.8928	-2.8861	960.49	957.12
2412	972.02	3.9573	-2.8858	974.91	971.50
2413	984.49	4.0018	-2.8856	987.38	983.95
2414	995.05	4.0283	-2.8854	997.93	994.50
2415	1003.7	4.0385	-2.8852	1006.6	1003.2
2416	1010.6	4.0340	-2.8851	1013.5	1010.0
2417	1015.6	4.0162	-2.8850	1018.5	1015.1
2418	1018.9	3.9861	-2.8849	1021.8	1018.4
2419	1020.4	3.9449	-2.8849	1023.3	1019.9
2420	1020.3	3.8934	-2.8849	1023.2	1019.8
2421	1018.5	3.8323	-2.8850	1021.4	1018.0
2422	1015.1	3.7622	-2.8850	1018.0	1014.7
2423	1010.1	3.6838	-2.8851	1013.0	1009.7
2424	1003.6	3.5976	-2.8852	1006.5	1003.2
2425	995.55	3.5038	-2.8854	998.44	995.26
2426	986.07	3.4029	-2.8856	988.96	985.83
2427	975.16	3.2951	-2.8858	978.05	974.97
2428	962.87	3.1806	-2.8860	965.75	962.73
2429	949.22	3.0595	-2.8863	952.11	949.15
2430	934.27	2.9319	-2.8866	937.15	934.26
2431	918.04	2.7977	-2.8869	920.92	918.09
2432	900.57	2.6569	-2.8872	903.46	900.70

1

```
***** ANSYS - ENGINEERING ANALYSIS SYSTEM  RELEASE 5.7.1   *****
ANSYS/Mechanical U
00251976          VERSION=INTEL NT      11:31:47  DEC 23, 2005 CP=   1165.094

 Point Beach Strainer Inner Rim Plate Analysis


 ***** POST1 NODAL STRESS LISTING *****

 LOAD STEP=     4  SUBSTEP=    15
  TIME=    4.0000      LOAD CASE=   0
 SHELL NODAL RESULTS ARE AT BOTTOM
```

NODE	S1	S2	S3	SINT	SEQV
2433	881.90	2.5094	-2.8876	884.79	882.10
2434	862.07	2.3549	-2.8879	864.96	862.35
2435	841.11	2.1931	-2.8883	844.00	841.47
2436	819.06	2.0236	-2.8888	821.95	819.51
2437	795.96	1.8459	-2.8892	798.85	796.49
2438	771.84	1.6592	-2.8897	774.73	772.46
2439	746.73	1.4628	-2.8902	749.62	747.45
2440	720.68	1.2556	-2.8906	723.57	721.50
2441	693.71	1.0363	-2.8912	696.60	694.64
2442	665.86	0.80345	-2.8917	668.76	666.92
2443	637.18	0.55498	-2.8922	640.07	638.35
2444	607.68	0.28851	-2.8928	610.57	608.99
2445	577.42	0.94495E-03	-2.8934	580.31	578.87
2446	546.41	-0.31159	-2.8940	549.31	548.02
2447	514.71	-0.65412	-2.8946	517.61	516.49
2448	482.35	-1.0332	-2.8952	485.24	484.32
2449	449.36	-1.4574	-2.8959	452.26	451.54
2450	415.79	-1.9384	-2.8965	418.69	418.21
2451	381.69	-2.4924	-2.8972	384.59	384.39
2452	347.11	-2.8978	-3.1422	350.25	350.13
2453	312.10	-2.8985	-3.9210	316.02	315.51
2454	276.75	-2.8992	-4.8793	281.63	280.64
2455	241.16	-2.8999	-6.0965	247.25	245.67
2456	205.49	-2.9006	-7.7048	213.20	210.84
2457	170.01	-2.9013	-9.9369	179.94	176.53
2458	135.17	-2.9020	-13.230	148.40	143.51
2459	101.87	-2.9028	-18.455	120.33	113.35
2460	71.861	-2.9035	-27.337	99.199	89.518
2461	47.907	-2.9043	-42.617	90.523	78.592
2462	31.908	-2.9050	-66.171	98.079	86.122
2463	22.500	-2.9058	-96.612	119.11	108.66
2464	16.985	-2.9065	-131.22	148.21	139.33
2465	13.538	-2.9073	-168.15	181.69	174.05
2466	11.223	-2.9081	-206.44	217.67	210.96
2467	9.5681	-2.9088	-245.61	255.18	249.17
2468	8.3258	-2.9096	-285.38	293.70	288.25
2469	7.3557	-2.9104	-325.59	332.95	327.94
2470	6.5738	-2.9112	-366.15	372.72	368.07

1

```
***** ANSYS - ENGINEERING ANALYSIS SYSTEM  RELEASE 5.7.1   *****
ANSYS/Mechanical U
00251976          VERSION=INTEL NT      11:31:47  DEC 23, 2005 CP=   1165.109

 Point Beach Strainer Inner Rim Plate Analysis


 ***** POST1 NODAL STRESS LISTING *****

 LOAD STEP=     4  SUBSTEP=    15
  TIME=    4.0000      LOAD CASE=   0
 SHELL NODAL RESULTS ARE AT BOTTOM
```

NODE	S1	S2	S3	SINT	SEQV
2471	5.9270	-2.9120	-406.98	412.91	408.56
2472	5.3807	-2.9128	-448.03	453.41	449.32
2473	4.9108	-2.9136	-489.26	494.17	490.31
2474	4.5007	-2.9144	-530.64	535.14	531.47
2475	4.1382	-2.9152	-572.14	576.28	572.78
2476	3.8142	-2.9160	-613.73	617.55	614.21
2477	3.5219	-2.9168	-655.41	658.93	655.73
2478	3.2561	-2.9176	-697.14	700.40	697.33
2479	3.0126	-2.9184	-738.91	741.93	738.98
2480	2.7882	-2.9191	-780.72	783.51	780.67
2481	2.5802	-2.9199	-822.53	825.11	822.38
2482	2.3864	-2.9207	-864.35	866.74	864.10
2483	2.2050	-2.9215	-906.16	908.37	905.81
2484	2.0345	-2.9223	-947.95	949.99	947.52
2485	1.8736	-2.9231	-989.72	991.59	989.20
2486	1.7211	-2.9239	-1031.4	1033.2	1030.8
2487	1.5760	-2.9247	-1073.1	1074.7	1072.5
2488	1.4373	-2.9255	-1114.8	1116.2	1114.0
2489	1.3041	-2.9263	-1156.3	1157.6	1155.5
2490	1.1730	-2.9271	-1197.8	1199.0	1197.0
2491	-2.9264	-4.5879	-1157.0	1154.1	1153.3
2492	-2.9259	-14.657	-1130.4	1127.5	1121.7
2493	-2.9256	-23.004	-1115.6	1112.7	1102.8
2494	-2.9255	-26.167	-1110.9	1108.0	1096.5
2495	-2.9256	-23.004	-1115.6	1112.7	1102.8
2496	-2.9259	-14.658	-1130.4	1127.5	1121.7
2497	-2.9264	-4.5897	-1157.0	1154.1	1153.3
2498	1.3047	-2.9263	-1156.3	1157.6	1155.5
2499	1.4398	-2.9255	-1114.7	1116.2	1114.0
2500	1.5796	-2.9247	-1073.1	1074.7	1072.4
2501	1.7251	-2.9239	-1031.4	1033.2	1030.8
2502	1.8775	-2.9231	-989.70	991.58	989.19
2503	2.0380	-2.9223	-947.94	949.98	947.51
2504	2.2079	-2.9215	-906.15	908.36	905.80
2505	2.3885	-2.9207	-864.34	866.73	864.09
2506	2.5815	-2.9199	-822.52	825.10	822.37
2507	2.7887	-2.9191	-780.71	783.50	780.66
2508	3.0124	-2.9184	-738.91	741.92	738.97

1

```
***** ANSYS - ENGINEERING ANALYSIS SYSTEM  RELEASE 5.7.1   *****
ANSYS/Mechanical U
00251976          VERSION=INTEL NT      11:31:47  DEC 23, 2005 CP=   1165.125

 Point Beach Strainer Inner Rim Plate Analysis


 ***** POST1 NODAL STRESS LISTING *****

 LOAD STEP=     4  SUBSTEP=    15
  TIME=    4.0000      LOAD CASE=   0
 SHELL NODAL RESULTS ARE AT BOTTOM
```

NODE	S1	S2	S3	SINT	SEQV
2509	3.2553	-2.9176	-697.13	700.39	697.32
2510	3.5206	-2.9168	-655.40	658.92	655.73
2511	3.8124	-2.9160	-613.73	617.54	614.20
2512	4.1361	-2.9152	-572.13	576.27	572.78
2513	4.4985	-2.9144	-530.64	535.13	531.47
2514	4.9085	-2.9136	-489.26	494.17	490.30
2515	5.3783	-2.9128	-448.03	453.41	449.32
2516	5.9248	-2.9120	-406.98	412.90	408.56
2517	6.5717	-2.9112	-366.15	372.72	368.07
2518	7.3538	-2.9104	-325.59	332.95	327.94
2519	8.3242	-2.9096	-285.38	293.70	288.25
2520	9.5667	-2.9088	-245.61	255.18	249.17
2521	11.222	-2.9081	-206.44	217.67	210.96
2522	13.538	-2.9073	-168.15	181.69	174.05
2523	16.985	-2.9065	-131.22	148.21	139.33
2524	22.500	-2.9058	-96.615	119.12	108.66
2525	31.909	-2.9050	-66.174	98.083	86.126
2526	47.908	-2.9043	-42.620	90.528	78.595
2527	71.862	-2.9035	-27.340	99.202	89.521
2528	101.87	-2.9028	-18.458	120.33	113.35
2529	135.17	-2.9020	-13.232	148.40	143.51
2530	170.01	-2.9013	-9.9384	179.94	176.53
2531	205.49	-2.9006	-7.7062	213.20	210.83
2532	241.16	-2.8999	-6.0978	247.25	245.67
2533	276.74	-2.8992	-4.8805	281.62	280.64
2534	312.09	-2.8985	-3.9224	316.02	315.51
2535	347.10	-2.8978	-3.1438	350.25	350.12
2536	381.69	-2.4943	-2.8972	384.58	384.38
2537	415.79	-1.9408	-2.8965	418.69	418.21
2538	449.36	-1.4603	-2.8959	452.25	451.54
2539	482.34	-1.0368	-2.8952	485.24	484.31
2540	514.71	-0.65859	-2.8946	517.60	516.49
2541	546.41	-0.31701	-2.8940	549.30	548.02
2542	577.41	-0.55591E-02	-2.8934	580.30	578.86
2543	607.68	0.28079	-2.8928	610.57	608.99
2544	637.17	0.54592	-2.8922	640.06	638.35
2545	665.86	0.79293	-2.8917	668.75	666.91
2546	693.70	1.0243	-2.8912	696.59	694.64

1

```
***** ANSYS - ENGINEERING ANALYSIS SYSTEM · RELEASE 5.7.1   *****
ANSYS/Mechanical U
00251976          VERSION=INTEL NT      11:31:47  DEC 23, 2005 CP=   1165.125

 Point Beach Strainer Inner Rim Plate Analysis

 ***** POST1 NODAL STRESS LISTING *****

 LOAD STEP=     4  SUBSTEP=    15
  TIME=    4.0000      LOAD CASE=   0
 SHELL NODAL RESULTS ARE AT BOTTOM
```

NODE	S1	S2	S3	SINT	SEQV
2547	720.67	1.2419	-2.8906	723.56	721.50
2548	746.73	1.4474	-2.8902	749.62	747.46
2549	771.83	1.6422	-2.8897	774.72	772.47
2550	795.96	1.8273	-2.8892	798.85	796.50
2551	819.06	2.0035	-2.8888	821.95	819.52
2552	841.12	2.1717	-2.8883	844.00	841.49
2553	862.08	2.3325	-2.8879	864.97	862.37
2554	881.91	2.4865	-2.8876	884.80	882.13
2555	900.58	2.6339	-2.8872	903.47	900.72
2556	918.06	2.7753	-2.8869	920.94	918.13
2557	934.29	2.9109	-2.8866	937.18	934.29
2558	949.26	3.0410	-2.8863	952.14	949.19
2559	962.91	3.1658	-2.8860	965.80	962.78
2560	975.21	3.2853	-2.8858	978.10	975.03
2561	986.13	3.3998	-2.8856	989.02	985.89
2562	995.63	3.5090	-2.8854	998.51	995.33
2563	1003.7	3.6131	-2.8852	1006.5	1003.3
2564	1010.2	3.7117	-2.8851	1013.1	1009.8
2565	1015.2	3.8045	-2.8850	1018.1	1014.7
2566	1018.6	3.8912	-2.8850	1021.5	1018.1
2567	1020.4	3.9710	-2.8849	1023.3	1019.9
2568	1020.6	4.0431	-2.8849	1023.5	1020.0
2569	1019.0	4.1063	-2.8849	1021.9	1018.4
2570	1015.8	4.1590	-2.8850	1018.6	1015.1
2571	1010.7	4.1993	-2.8851	1013.6	1010.1
2572	1003.9	4.2247	-2.8852	1006.8	1003.2
2573	995.17	4.2320	-2.8854	998.06	994.52
2574	984.59	4.2172	-2.8856	987.48	983.95
2575	972.09	4.1753	-2.8858	974.97	971.46
2576	957.62	4.1001	-2.8861	960.50	957.03
2577	941.15	3.9839	-2.8864	944.04	940.62
2578	922.65	3.8175	-2.8868	925.53	922.20
2579	902.07	3.5893	-2.8872	904.96	901.74
2580	879.39	3.2857	-2.8876	882.28	879.21
2581	854.58	2.8905	-2.8881	857.46	854.59
2582	827.59	2.3849	-2.8886	830.48	827.86
2583	798.42	1.7475	-2.8892	801.31	799.00
2584	767.04	0.95550	-2.8898	769.93	768.02

1

```
***** ANSYS - ENGINEERING ANALYSIS SYSTEM  RELEASE 5.7.1   *****
ANSYS/Mechanical U
00251976          VERSION=INTEL NT      11:31:47  DEC 23, 2005 CP=   1165.125

 Point Beach Strainer Inner Rim Plate Analysis


 ***** POST1 NODAL STRESS LISTING *****

 LOAD STEP=     4  SUBSTEP=    15
  TIME=    4.0000      LOAD CASE=   0
 SHELL NODAL RESULTS ARE AT BOTTOM
```

NODE	S1	S2	S3	SINT	SEQV
2585	733.44	-0.14763E-01	-2.8904	736.33	734.90
2586	697.62	-1.1846	-2.8911	700.51	699.66
2587	659.60	-2.5689	-2.8919	662.49	662.33
2588	619.40	-2.8926	-4.1660	623.57	622.93
2589	577.10	-2.8934	-5.9397	583.04	581.53
2590	532.80	-2.8943	-7.7740	540.58	538.15
2591	486.60	-2.8952	-9.3271	495.93	492.74
2592	421.17	0.99128	-2.8964	424.07	422.14
2593	465.40	3.3533	-2.8955	468.29	465.20
2594	507.52	5.6712	-2.8947	510.41	506.18
2595	547.59	7.7936	-2.8940	550.49	545.22
2596	585.60	9.6636	-2.8932	588.50	582.32
2597	621.53	11.268	-2.8925	624.42	617.46
2598	655.34	12.620	-2.8919	658.23	650.62
2599	687.05	13.741	-2.8913	689.94	681.78
2600	716.66	14.660	-2.8907	719.55	710.94
2601	744.19	15.405	-2.8902	747.08	738.10
2602	769.64	16.000	-2.8897	772.53	763.26
2603	793.06	16.471	-2.8893	795.95	786.44
2604	814.46	16.837	-2.8888	817.34	807.66
2605	833.87	17.116	-2.8885	836.76	826.94
2606	851.33	17.323	-2.8881	854.22	844.30
2607	866.88	17.468	-2.8878	869.76	859.77
2608	880.53	17.564	-2.8876	883.42	873.38
2609	892.35	17.616	-2.8874	895.23	885.16
2610	902.34	17.632	-2.8872	905.23	895.15
2611	910.56	17.616	-2.8870	913.45	903.37
2612	917.04	17.574	-2.8869	919.93	909.87
2613	921.82	17.507	-2.8868	924.70	914.68
2614	924.93	17.420	-2.8867	927.81	917.83
2615	926.40	17.313	-2.8867	929.29	919.36
2616	926.29	17.188	-2.8867	929.17	919.30
2617	924.61	17.048	-2.8867	927.50	917.69
2618	921.42	16.892	-2.8868	924.30	914.57
2619	916.74	16.722	-2.8869	919.62	909.98
2620	910.61	16.538	-2.8870	913.50	903.94
2621	903.07	16.341	-2.8872	905.95	896.49
2622	894.15	16.132	-2.8873	897.04	887.68

1

```
***** ANSYS - ENGINEERING ANALYSIS SYSTEM  RELEASE 5.7.1   *****
ANSYS/Mechanical U
00251976          VERSION=INTEL NT      11:31:47  DEC 23, 2005 CP=   1165.141

 Point Beach Strainer Inner Rim Plate Analysis


 ***** POST1 NODAL STRESS LISTING *****

 LOAD STEP=     4  SUBSTEP=    15
  TIME=    4.0000      LOAD CASE=   0
 SHELL NODAL RESULTS ARE AT BOTTOM
```

NODE	S1	S2	S3	SINT	SEQV
2623	883.89	15.909	-2.8875	886.78	877.53
2624	872.33	15.675	-2.8877	875.21	866.08
2625	859.49	15.428	-2.8880	862.38	853.37
2626	845.43	15.170	-2.8883	848.31	839.43
2627	830.16	14.900	-2.8885	833.05	824.30
2628	813.73	14.618	-2.8889	816.62	808.01
2629	796.17	14.325	-2.8892	799.05	790.59
2630	777.51	14.020	-2.8895	780.40	772.08
2631	757.79	13.703	-2.8899	760.68	752.52
2632	737.04	13.375	-2.8903	739.93	731.93
2633	715.30	13.035	-2.8907	718.19	710.36
2634	692.60	12.683	-2.8912	695.49	687.83
2635	668.97	12.318	-2.8916	671.86	664.39
2636	644.44	11.941	-2.8921	647.34	640.05
2637	619.06	11.551	-2.8926	621.95	614.85
2638	592.84	11.146	-2.8931	595.73	588.84
2639	565.83	10.727	-2.8936	568.72	562.03
2640	538.05	10.291	-2.8941	540.94	534.47
2641	509.54	9.8366	-2.8947	512.43	506.19
2642	480.33	9.3620	-2.8952	483.22	477.21
2643	450.45	8.8638	-2.8958	453.35	447.58
2644	419.94	8.3375	-2.8964	422.84	417.33
2645	388.83	7.7775	-2.8970	391.73	386.50
2646	357.16	7.1752	-2.8976	360.06	355.13
2647	324.97	6.5188	-2.8982	327.87	323.26
2648	292.30	5.7904	-2.8988	295.20	290.95
2649	259.21	4.9626	-2.8995	262.11	258.27
2650	225.77	3.9910	-2.9001	228.67	225.30
2651	192.08	2.7993	-2.9008	194.98	192.20
2652	158.31	1.2463	-2.9015	161.21	159.18
2653	124.77	-0.95521	-2.9022	127.67	126.71
2654	92.134	-2.9027	-4.4596	96.593	95.825
2655	62.073	-2.9035	-10.906	72.979	69.325
2656	38.268	-2.9042	-23.956	62.224	54.819
2657	24.067	-2.9049	-46.934	71.001	62.077
2658	16.999	-2.9056	-77.347	94.346	86.136
2659	13.222	-2.9063	-111.33	124.55	117.32
2660	10.888	-2.9070	-147.02	157.90	151.48

1

```
***** ANSYS - ENGINEERING ANALYSIS SYSTEM  RELEASE 5.7.1   *****
ANSYS/Mechanical U
00251976          VERSION=INTEL NT      11:31:47  DEC 23, 2005 CP=   1165.172

 Point Beach Strainer Inner Rim Plate Analysis


 ***** POST1 NODAL STRESS LISTING *****

 LOAD STEP=     4  SUBSTEP=    15
  TIME=    4.0000      LOAD CASE=   0
 SHELL NODAL RESULTS ARE AT BOTTOM
```

NODE	S1	S2	S3	SINT	SEQV
2661	9.2593	-2.9077	-183.65	192.91	187.12
2662	8.0178	-2.9085	-220.88	228.90	223.64
2663	7.0086	-2.9092	-258.55	265.56	260.74
2664	6.1490	-2.9099	-296.55	302.70	298.28
2665	5.3914	-2.9107	-334.82	340.21	336.13
2666	4.7063	-2.9114	-373.30	378.01	374.26
2667	4.0748	-2.9121	-411.97	416.04	412.59
2668	3.4842	-2.9129	-450.79	454.27	451.11
2669	2.9255	-2.9136	-489.73	492.66	489.77
2670	2.3924	-2.9144	-528.79	531.18	528.55
2671	1.8804	-2.9151	-567.94	569.82	567.44
2672	1.3858	-2.9159	-607.16	608.54	606.40
2673	0.90600	-2.9166	-646.43	647.34	645.44
2674	0.43897	-2.9174	-685.75	686.19	684.52
2675	-0.16968E-01	-2.9181	-725.10	725.09	723.64
2676	-0.46316	-2.9189	-764.47	764.01	762.78
2677	-0.90071	-2.9196	-803.84	802.94	801.93
2678	-1.3306	-2.9204	-843.21	841.88	841.09
2679	-1.7536	-2.9211	-882.56	880.81	880.23
2680	-2.1706	-2.9219	-921.90	919.73	919.35
2681	-2.5823	-2.9226	-961.20	958.62	958.45
2682	-2.9234	-2.9894	-1000.5	997.54	997.51
2683	-2.9241	-3.3929	-1039.7	1036.8	1036.5
2684	-2.9249	-3.7934	-1078.9	1075.9	1075.5
2685	-2.9256	-4.1920	-1118.0	1115.0	1114.4
2686	376.53	17.960	-2.8972	379.43	369.44
2687	420.24	21.895	-2.8964	423.14	411.30
2688	461.64	25.307	-2.8956	464.53	451.10
2689	500.78	28.256	-2.8948	503.67	488.84
2690	537.73	30.786	-2.8941	540.62	524.59
2691	572.53	32.941	-2.8935	575.42	558.37
2692	605.22	34.763	-2.8928	608.11	590.18
2693	635.82	36.294	-2.8922	638.71	620.05
2694	664.36	37.574	-2.8917	667.25	647.97
2695	690.86	38.637	-2.8912	693.75	673.95
2696	715.36	39.517	-2.8907	718.25	698.01
2697	737.88	40.240	-2.8903	740.77	720.17
2698	758.45	40.830	-2.8899	761.34	740.45

1

```
***** ANSYS - ENGINEERING ANALYSIS SYSTEM  RELEASE 5.7.1   *****
ANSYS/Mechanical U
00251976          VERSION=INTEL NT      11:31:47  DEC 23, 2005 CP=   1165.188

 Point Beach Strainer Inner Rim Plate Analysis


 ***** POST1 NODAL STRESS LISTING *****

 LOAD STEP=     4  SUBSTEP=    15
  TIME=    4.0000      LOAD CASE=   0
 SHELL NODAL RESULTS ARE AT BOTTOM
```

NODE	S1	S2	S3	SINT	SEQV
2699	777.11	41.304	-2.8896	780.00	758.87
2700	793.88	41.680	-2.8892	796.77	775.45
2701	808.81	41.969	-2.8889	811.70	790.23
2702	821.93	42.182	-2.8887	824.81	803.23
2703	833.26	42.328	-2.8885	836.15	814.49
2704	842.86	42.412	-2.8883	845.75	824.03
2705	850.75	42.442	-2.8881	853.64	831.90
2706	856.96	42.421	-2.8880	859.85	838.12
2707	861.54	42.353	-2.8879	864.43	842.72
2708	864.52	42.241	-2.8879	867.41	845.75
2709	865.93	42.088	-2.8879	868.82	847.23
2710	865.82	41.896	-2.8879	868.70	847.20
2711	864.20	41.667	-2.8879	867.09	845.69
2712	861.13	41.402	-2.8880	864.02	842.75
2713	856.63	41.102	-2.8880	859.52	838.39
2714	850.74	40.769	-2.8881	853.63	832.66
2715	843.50	40.404	-2.8883	846.39	825.59
2716	834.94	40.007	-2.8884	837.82	817.22
2717	825.08	39.579	-2.8886	827.97	807.58
2718	813.98	39.122	-2.8888	816.87	796.70
2719	801.66	38.636	-2.8891	804.55	784.61
2720	788.15	38.122	-2.8893	791.04	771.35
2721	773.49	37.580	-2.8896	776.38	756.96
2722	757.72	37.011	-2.8899	760.61	741.46
2723	740.86	36.417	-2.8902	743.75	724.89
2724	722.94	35.797	-2.8906	725.83	707.28
2725	704.01	35.152	-2.8909	706.90	688.67
2726	684.09	34.483	-2.8913	686.98	669.08
2727	663.21	33.790	-2.8917	666.11	648.54
2728	641.42	33.074	-2.8921	644.31	627.10
2729	618.73	32.336	-2.8926	621.62	604.77
2730	595.17	31.576	-2.8930	598.07	581.60
2731	570.79	30.795	-2.8935	573.69	557.61
2732	545.61	29.992	-2.8940	548.51	532.83
2733	519.67	29.168	-2.8945	522.56	507.29
2734	492.98	28.322	-2.8950	495.88	481.03
2735	465.59	27.456	-2.8955	468.48	454.07
2736	437.51	26.567	-2.8960	440.41	426.44

1

```
***** ANSYS - ENGINEERING ANALYSIS SYSTEM  RELEASE 5.7.1   *****
ANSYS/Mechanical U
00251976          VERSION=INTEL NT      11:31:47  DEC 23, 2005 CP=   1165.188

 Point Beach Strainer Inner Rim Plate Analysis


 ***** POST1 NODAL STRESS LISTING *****

 LOAD STEP=     4  SUBSTEP=    15
  TIME=    4.0000      LOAD CASE=   0
 SHELL NODAL RESULTS ARE AT BOTTOM
```

NODE	S1	S2	S3	SINT	SEQV
2737	408.79	25.656	-2.8966	411.69	398.18
2738	379.45	24.721	-2.8971	382.35	369.31
2739	349.52	23.758	-2.8977	352.42	339.88
2740	319.04	22.765	-2.8983	321.94	309.90
2741	288.03	21.736	-2.8989	290.93	279.43
2742	256.54	20.660	-2.8995	259.44	248.50
2743	224.60	19.521	-2.9001	227.50	217.16
2744	192.28	18.290	-2.9007	195.18	185.49
2745	159.65	16.912	-2.9014	162.55	153.60
2746	126.85	15.265	-2.9020	129.75	121.69
2747	94.230	13.038	-2.9026	97.133	90.225
2748	62.823	9.2158	-2.9033	65.726	60.582
2749	36.734	-0.28436	-2.9041	39.638	38.395
2750	23.451	-2.9046	-22.928	46.379	40.290
2751	18.472	-2.9053	-54.188	72.660	64.678
2752	15.872	-2.9059	-88.120	103.99	95.991
2753	14.047	-2.9066	-123.10	137.15	129.51
2754	12.552	-2.9073	-158.66	171.21	164.03
2755	11.223	-2.9080	-194.62	205.84	199.15
2756	9.9886	-2.9087	-230.88	240.87	234.69
2757	8.8140	-2.9094	-267.40	276.21	270.54
2758	7.6788	-2.9101	-304.13	311.81	306.65
2759	6.5712	-2.9108	-341.05	347.62	342.97
2760	5.4839	-2.9115	-378.12	383.61	379.48
2761	4.4121	-2.9122	-415.34	419.75	416.14
2762	3.3527	-2.9129	-452.68	456.03	452.93
2763	2.3035	-2.9137	-490.12	492.42	489.84
2764	1.2629	-2.9144	-527.65	528.91	526.84
2765	0.22994	-2.9151	-565.25	565.48	563.92
2766	-0.79623	-2.9158	-602.91	602.12	601.06
2767	-1.8161	-2.9165	-640.62	638.81	638.26
2768	-2.8302	-2.9172	-678.36	675.53	675.49
2769	-2.9180	-3.8387	-716.13	713.21	712.75
2770	-2.9187	-4.8419	-753.90	750.98	750.02
2771	-2.9194	-5.8402	-791.68	788.76	787.30
2772	-2.9201	-6.8336	-829.45	826.53	824.58
2773	-2.9208	-7.8225	-867.20	864.28	861.84
2774	-2.9216	-8.8072	-904.93	902.01	899.08

1

```
***** ANSYS - ENGINEERING ANALYSIS SYSTEM  RELEASE 5.7.1   *****
ANSYS/Mechanical U
00251976          VERSION=INTEL NT      11:31:47  DEC 23, 2005 CP=   1165.219

 Point Beach Strainer Inner Rim Plate Analysis


 ***** POST1 NODAL STRESS LISTING *****

 LOAD STEP=     4  SUBSTEP=    15
  TIME=    4.0000      LOAD CASE=   0
 SHELL NODAL RESULTS ARE AT BOTTOM
```

NODE	S1	S2	S3	SINT	SEQV
2775	-2.9223	-9.7881	-942.62	939.70	936.29
2776	-2.9230	-10.766	-980.28	977.36	973.46
2777	-2.9237	-11.741	-1017.9	1015.0	1010.6
2778	-2.9244	-12.714	-1055.5	1052.5	1047.7
2779	-2.9251	-13.686	-1093.0	1090.0	1084.7
2780	350.83	31.791	-2.8977	353.73	337.72
2781	394.35	37.010	-2.8968	397.25	378.87
2782	435.49	41.266	-2.8961	438.38	418.05
2783	474.28	44.817	-2.8953	477.17	455.20
2784	510.79	47.820	-2.8946	513.68	490.30
2785	545.09	50.361	-2.8940	547.99	523.39
2786	577.24	52.513	-2.8934	580.14	554.51
2787	607.29	54.337	-2.8928	610.19	583.68
2788	635.28	55.885	-2.8923	638.18	610.91
2789	661.25	57.199	-2.8918	664.14	636.23
2790	685.23	58.313	-2.8913	688.12	659.66
2791	707.26	59.255	-2.8909	710.15	681.21
2792	727.38	60.048	-2.8905	730.27	700.92
2793	745.61	60.709	-2.8902	748.50	718.82
2794	762.00	61.254	-2.8898	764.89	734.92
2795	776.58	61.693	-2.8896	779.47	749.27
2796	789.39	62.036	-2.8893	792.28	761.89
2797	800.46	62.292	-2.8891	803.35	772.82
2798	809.82	62.467	-2.8889	812.71	782.08
2799	817.52	62.566	-2.8888	820.41	789.72
2800	823.58	62.594	-2.8887	826.47	795.75
2801	828.04	62.554	-2.8886	830.93	800.22
2802	830.94	62.451	-2.8885	833.83	803.16
2803	832.32	62.286	-2.8885	835.20	804.60
2804	832.19	62.062	-2.8885	835.08	804.57
2805	830.61	61.782	-2.8885	833.50	803.12
2806	827.60	61.447	-2.8886	830.49	800.26
2807	823.20	61.059	-2.8887	826.09	796.04
2808	817.44	60.619	-2.8888	820.33	790.49
2809	810.36	60.130	-2.8889	813.25	783.64
2810	801.99	59.592	-2.8891	804.88	775.53
2811	792.36	59.008	-2.8893	795.25	766.18
2812	781.51	58.378	-2.8895	784.40	755.63

1

```
***** ANSYS - ENGINEERING ANALYSIS SYSTEM  RELEASE 5.7.1   *****
ANSYS/Mechanical U
00251976          VERSION=INTEL NT      11:31:47  DEC 23, 2005 CP=   1165.219

 Point Beach Strainer Inner Rim Plate Analysis


 ***** POST1 NODAL STRESS LISTING *****

 LOAD STEP=     4  SUBSTEP=    15
  TIME=    4.0000      LOAD CASE=   0
 SHELL NODAL RESULTS ARE AT BOTTOM
```

NODE	S1	S2	S3	SINT	SEQV
2813	769.47	57.703	-2.8897	772.36	743.92
2814	756.27	56.985	-2.8899	759.16	731.07
2815	741.95	56.225	-2.8902	744.84	717.12
2816	726.54	55.425	-2.8905	729.43	702.09
2817	710.07	54.585	-2.8908	712.96	686.03
2818	692.57	53.707	-2.8912	695.46	668.96
2819	674.07	52.791	-2.8915	676.97	650.91
2820	654.61	51.840	-2.8919	657.51	631.92
2821	634.22	50.854	-2.8923	637.11	612.01
2822	612.93	49.835	-2.8927	615.82	591.22
2823	590.76	48.783	-2.8931	593.65	569.58
2824	567.75	47.700	-2.8935	570.65	547.11
2825	543.93	46.587	-2.8940	546.83	523.84
2826	519.33	45.445	-2.8945	522.23	499.81
2827	493.98	44.275	-2.8949	496.87	475.05
2828	467.90	43.077	-2.8954	470.79	449.57
2829	441.12	41.854	-2.8959	444.02	423.42
2830	413.68	40.605	-2.8965	416.58	396.62
2831	385.61	39.331	-2.8970	388.50	369.20
2832	356.92	38.033	-2.8976	359.81	341.19
2833	327.64	36.711	-2.8981	330.54	312.62
2834	297.81	35.365	-2.8987	300.71	283.52
2835	267.46	33.994	-2.8993	270.36	253.93
2836	236.60	32.595	-2.8998	239.50	223.88
2837	205.28	31.164	-2.9004	208.18	193.41
2838	173.52	29.692	-2.9011	176.42	162.60
2839	141.38	28.157	-2.9017	144.28	131.53
2840	108.93	26.505	-2.9023	111.83	100.41
2841	76.382	24.545	-2.9029	79.285	69.738
2842	44.988	21.056	-2.9036	47.892	41.476
2843	26.782	4.0252	-2.9043	29.686	26.899
2844	23.042	-2.9048	-27.804	50.846	44.037
2845	21.010	-2.9055	-61.652	82.663	73.676
2846	19.290	-2.9062	-96.100	115.39	106.05
2847	17.673	-2.9068	-130.92	148.59	139.45
2848	16.100	-2.9075	-166.03	182.13	173.41
2849	14.549	-2.9082	-201.39	215.94	207.76
2850	13.009	-2.9088	-236.97	249.98	242.42

1

```
***** ANSYS - ENGINEERING ANALYSIS SYSTEM  RELEASE 5.7.1   *****
ANSYS/Mechanical U
00251976          VERSION=INTEL NT      11:31:47  DEC 23, 2005 CP=   1165.234

 Point Beach Strainer Inner Rim Plate Analysis


 ***** POST1 NODAL STRESS LISTING *****

 LOAD STEP=     4  SUBSTEP=    15
  TIME=    4.0000      LOAD CASE=   0
 SHELL NODAL RESULTS ARE AT BOTTOM
```

NODE	S1	S2	S3	SINT	SEQV
2851	11.477	-2.9095	-272.75	284.23	277.32
2852	9.9491	-2.9102	-308.71	318.66	312.43
2853	8.4238	-2.9109	-344.82	353.24	347.72
2854	6.9007	-2.9116	-381.07	387.97	383.16
2855	5.3793	-2.9123	-417.45	422.83	418.75
2856	3.8598	-2.9130	-453.94	457.80	454.45
2857	2.3421	-2.9137	-490.52	492.86	490.25
2858	0.82647	-2.9144	-527.18	528.00	526.14
2859	-0.68680	-2.9151	-563.90	563.22	562.11
2860	-2.1975	-2.9158	-600.68	598.49	598.13
2861	-2.9165	-3.7053	-637.50	634.59	634.19
2862	-2.9172	-5.2100	-674.35	671.44	670.29
2863	-2.9179	-6.7113	-711.22	708.31	706.42
2864	-2.9186	-8.2090	-748.10	745.18	742.55
2865	-2.9193	-9.7030	-784.98	782.06	778.69
2866	-2.9200	-11.193	-821.85	818.93	814.83
2867	-2.9207	-12.680	-858.70	855.78	850.94
2868	-2.9214	-14.162	-895.53	892.61	887.04
2869	-2.9221	-15.641	-932.32	929.40	923.11
2870	-2.9228	-17.117	-969.08	966.16	959.14
2871	-2.9235	-18.591	-1005.8	1002.9	995.13
2872	-2.9242	-20.062	-1042.5	1039.5	1031.1
2873	-2.9249	-21.533	-1079.1	1076.1	1067.0
2874	342.31	37.157	-2.8978	345.21	327.03
2875	385.78	42.977	-2.8970	388.67	367.89
2876	426.84	47.624	-2.8962	429.74	406.84
2877	465.56	51.449	-2.8955	468.45	443.78
2878	501.98	54.599	-2.8948	504.87	478.72
2879	536.18	57.217	-2.8941	539.07	511.67
2880	568.21	59.412	-2.8935	571.10	542.64
2881	598.13	61.270	-2.8930	601.02	571.65
2882	625.98	62.854	-2.8924	628.87	598.71
2883	651.79	64.211	-2.8919	654.68	623.85
2884	675.62	65.376	-2.8915	678.51	647.09
2885	697.50	66.376	-2.8911	700.39	668.46
2886	717.47	67.229	-2.8907	720.36	687.99
2887	735.57	67.953	-2.8903	738.46	705.71
2888	751.84	68.558	-2.8900	754.73	721.66

1

```
***** ANSYS - ENGINEERING ANALYSIS SYSTEM  RELEASE 5.7.1   *****
ANSYS/Mechanical U
00251976          VERSION=INTEL NT      11:31:47  DEC 23, 2005 CP=   1165.234

 Point Beach Strainer Inner Rim Plate Analysis


 ***** POST1 NODAL STRESS LISTING *****

 LOAD STEP=     4  SUBSTEP=    15
  TIME=    4.0000      LOAD CASE=   0
 SHELL NODAL RESULTS ARE AT BOTTOM
```

NODE	S1	S2	S3	SINT	SEQV
2889	766.30	69.056	-2.8898	769.19	735.86
2890	779.01	69.453	-2.8895	781.90	748.35
2891	789.98	69.757	-2.8893	792.87	759.16
2892	799.27	69.974	-2.8891	802.16	768.33
2893	806.90	70.107	-2.8890	809.79	775.87
2894	812.91	70.161	-2.8889	815.80	781.84
2895	817.34	70.140	-2.8888	820.23	786.26
2896	820.21	70.047	-2.8887	823.10	789.16
2897	821.57	69.885	-2.8887	824.46	790.59
2898	821.44	69.655	-2.8887	824.33	790.56
2899	819.87	69.361	-2.8887	822.75	789.11
2900	816.88	69.005	-2.8888	819.76	786.29
2901	812.51	68.588	-2.8889	815.39	782.11
2902	806.79	68.112	-2.8890	809.68	776.62
2903	799.76	67.579	-2.8891	802.65	769.84
2904	791.45	66.991	-2.8893	794.34	761.81
2905	781.89	66.349	-2.8895	784.78	752.56
2906	771.12	65.655	-2.8897	774.01	742.12
2907	759.17	64.911	-2.8899	762.06	730.53
2908	746.08	64.117	-2.8901	748.97	717.81
2909	731.86	63.275	-2.8904	734.75	704.01
2910	716.57	62.387	-2.8907	719.46	689.14
2911	700.22	61.455	-2.8910	703.11	673.25
2912	682.85	60.479	-2.8913	685.74	656.36
2913	664.50	59.461	-2.8917	667.39	638.50
2914	645.18	58.403	-2.8921	648.08	619.71
2915	624.95	57.306	-2.8924	627.84	600.01
2916	603.81	56.171	-2.8928	606.71	579.44
2917	581.81	54.999	-2.8933	584.71	558.02
2918	558.98	53.793	-2.8937	561.87	535.78
2919	535.34	52.553	-2.8942	538.23	512.76
2920	510.92	51.281	-2.8946	513.82	488.98
2921	485.76	49.978	-2.8951	488.65	464.48
2922	459.87	48.645	-2.8956	462.77	439.27
2923	433.30	47.285	-2.8961	436.20	413.40
2924	406.06	45.897	-2.8966	408.96	386.88
2925	378.19	44.483	-2.8971	381.09	359.74
2926	349.71	43.046	-2.8977	352.60	332.03

1

```
***** ANSYS - ENGINEERING ANALYSIS SYSTEM  RELEASE 5.7.1   *****
ANSYS/Mechanical U
00251976          VERSION=INTEL NT      11:31:47  DEC 23, 2005 CP=   1165.266

 Point Beach Strainer Inner Rim Plate Analysis


 ***** POST1 NODAL STRESS LISTING *****

 LOAD STEP=     4  SUBSTEP=    15
  TIME=    4.0000      LOAD CASE=   0
 SHELL NODAL RESULTS ARE AT BOTTOM
```

NODE	S1	S2	S3	SINT	SEQV
2927	320.64	41.585	-2.8982	323.54	303.75
2928	291.02	40.102	-2.8988	293.92	274.95
2929	260.87	38.598	-2.8994	263.77	245.66
2930	230.21	37.075	-2.9000	233.11	215.92
2931	199.08	35.533	-2.9006	201.98	185.77
2932	167.48	33.974	-2.9012	170.39	155.27
2933	135.46	32.399	-2.9018	138.36	124.52
2934	103.03	30.809	-2.9024	105.93	93.736
2935	70.207	29.205	-2.9030	73.110	63.471
2936	37.024	27.588	-2.9037	39.928	36.146
2937	25.959	3.5000	-2.9044	28.864	26.254
2938	24.319	-2.9049	-30.345	54.664	47.340
2939	22.670	-2.9056	-64.488	87.158	77.598
2940	21.011	-2.9062	-98.911	119.92	109.93
2941	19.344	-2.9069	-133.59	152.94	143.11
2942	17.670	-2.9075	-168.51	186.18	176.79
2943	15.990	-2.9082	-203.65	219.65	210.83
2944	14.305	-2.9089	-239.00	253.30	245.15
2945	12.615	-2.9096	-274.53	287.14	279.70
2946	10.921	-2.9102	-310.23	321.15	314.46
2947	9.2238	-2.9109	-346.08	355.30	349.39
2948	7.5245	-2.9116	-382.06	389.58	384.47
2949	5.8237	-2.9123	-418.16	423.99	419.69
2950	4.1220	-2.9130	-454.37	458.50	455.02
2951	2.4200	-2.9137	-490.67	493.09	490.45
2952	0.71843	-2.9144	-527.05	527.77	525.96
2953	-0.98227	-2.9151	-563.50	562.51	561.55
2954	-2.6815	-2.9158	-599.99	597.31	597.19
2955	-2.9165	-4.3788	-636.52	633.61	632.88
2956	-2.9172	-6.0737	-673.09	670.17	668.60
2957	-2.9179	-7.7657	-709.67	706.75	704.34
2958	-2.9186	-9.4547	-746.26	743.34	740.10
2959	-2.9192	-11.140	-782.85	779.93	775.85
2960	-2.9199	-12.822	-819.43	816.51	811.60
2961	-2.9206	-14.500	-855.99	853.07	847.34
2962	-2.9213	-16.175	-892.53	889.61	883.06
2963	-2.9220	-17.846	-929.03	926.11	918.74
2964	-2.9227	-19.514	-965.50	962.58	954.39

1

```
***** ANSYS - ENGINEERING ANALYSIS SYSTEM  RELEASE 5.7.1   *****
ANSYS/Mechanical U
00251976          VERSION=INTEL NT      11:31:47  DEC 23, 2005 CP=   1165.266

 Point Beach Strainer Inner Rim Plate Analysis


 ***** POST1 NODAL STRESS LISTING *****

 LOAD STEP=     4  SUBSTEP=    15
  TIME=    4.0000      LOAD CASE=   0
 SHELL NODAL RESULTS ARE AT BOTTOM
```

NODE	S1	S2	S3	SINT	SEQV
2965	-2.9234	-21.179	-1001.9	999.00	990.00
2966	-2.9241	-22.842	-1038.3	1035.4	1025.6
2967	-2.9248	-24.505	-1074.6	1071.7	1061.1
2968	350.21	32.360	-2.8977	353.11	336.87
2969	393.74	37.931	-2.8969	396.64	377.89
2970	434.91	42.540	-2.8961	437.81	416.95
2971	473.75	46.159	-2.8953	476.64	454.10
2972	510.37	49.035	-2.8946	513.27	489.37
2973	544.81	51.355	-2.8940	547.71	522.70
2974	577.09	53.264	-2.8934	579.98	554.04
2975	607.24	54.864	-2.8928	610.13	583.40
2976	635.29	56.223	-2.8923	638.19	610.78
2977	661.30	57.388	-2.8918	664.19	636.20
2978	685.30	58.390	-2.8913	688.19	659.69
2979	707.34	59.253	-2.8909	710.23	681.28
2980	727.45	59.992	-2.8905	730.34	701.02
2981	745.68	60.620	-2.8901	748.57	718.92
2982	762.06	61.146	-2.8898	764.95	735.02
2983	776.63	61.579	-2.8896	779.52	749.37
2984	789.42	61.924	-2.8893	792.31	761.98
2985	800.48	62.186	-2.8891	803.37	772.89
2986	809.84	62.372	-2.8889	812.73	782.14
2987	817.53	62.483	-2.8888	820.42	789.76
2988	823.59	62.524	-2.8887	826.48	795.79
2989	828.05	62.497	-2.8886	830.94	800.25
2990	830.94	62.406	-2.8885	833.83	803.18
2991	832.31	62.253	-2.8885	835.20	804.61
2992	832.19	62.039	-2.8885	835.08	804.58
2993	830.60	61.768	-2.8885	833.49	803.12
2994	827.59	61.441	-2.8886	830.48	800.26
2995	823.19	61.059	-2.8887	826.08	796.04
2996	817.43	60.625	-2.8888	820.32	790.48
2997	810.35	60.140	-2.8889	813.24	783.63
2998	801.98	59.605	-2.8891	804.87	775.52
2999	792.36	59.023	-2.8893	795.24	766.17
3000	781.51	58.394	-2.8895	784.40	755.62
3001	769.47	57.720	-2.8897	772.36	743.91
3002	756.27	57.002	-2.8899	759.16	731.06

1

```
***** ANSYS - ENGINEERING ANALYSIS SYSTEM  RELEASE 5.7.1   *****
ANSYS/Mechanical U
00251976          VERSION=INTEL NT      11:31:47  DEC 23, 2005 CP=   1165.281

 Point Beach Strainer Inner Rim Plate Analysis


 ***** POST1 NODAL STRESS LISTING *****

 LOAD STEP=     4  SUBSTEP=    15
  TIME=    4.0000      LOAD CASE=   0
 SHELL NODAL RESULTS ARE AT BOTTOM
```

NODE	S1	S2	S3	SINT	SEQV
3003	741.95	56.242	-2.8902	744.84	717.10
3004	726.54	55.441	-2.8905	729.43	702.08
3005	710.07	54.600	-2.8908	712.96	686.02
3006	692.57	53.721	-2.8912	695.46	668.95
3007	674.07	52.805	-2.8915	676.96	650.91
3008	654.61	51.853	-2.8919	657.51	631.91
3009	634.22	50.865	-2.8923	637.11	612.01
3010	612.93	49.845	-2.8927	615.82	591.22
3011	590.76	48.792	-2.8931	593.65	569.57
3012	567.75	47.708	-2.8935	570.65	547.10
3013	543.93	46.594	-2.8940	546.83	523.84
3014	519.33	45.450	-2.8945	522.23	499.81
3015	493.98	44.279	-2.8949	496.87	475.04
3016	467.90	43.081	-2.8954	470.79	449.57
3017	441.13	41.857	-2.8959	444.02	423.42
3018	413.69	40.607	-2.8965	416.58	396.62
3019	385.61	39.333	-2.8970	388.50	369.20
3020	356.92	38.035	-2.8976	359.81	341.19
3021	327.64	36.712	-2.8981	330.54	312.62
3022	297.82	35.366	-2.8987	300.71	283.52
3023	267.46	33.994	-2.8993	270.36	253.93
3024	236.60	32.595	-2.8998	239.50	223.88
3025	205.28	31.164	-2.9004	208.18	193.41
3026	173.52	29.692	-2.9011	176.42	162.60
3027	141.38	28.157	-2.9017	144.28	131.53
3028	108.93	26.506	-2.9023	111.83	100.41
3029	76.381	24.546	-2.9029	79.284	69.737
3030	44.986	21.058	-2.9036	47.890	41.474
3031	26.779	4.0279	-2.9043	29.684	26.896
3032	23.041	-2.9048	-27.803	50.843	44.035
3033	21.010	-2.9055	-61.652	82.662	73.675
3034	19.290	-2.9062	-96.100	115.39	106.05
3035	17.673	-2.9068	-130.92	148.59	139.45
3036	16.100	-2.9075	-166.03	182.13	173.41
3037	14.549	-2.9082	-201.39	215.94	207.76
3038	13.010	-2.9088	-236.97	249.98	242.42
3039	11.478	-2.9095	-272.75	284.23	277.32
3040	9.9502	-2.9102	-308.71	318.66	312.43

1

```
***** ANSYS - ENGINEERING ANALYSIS SYSTEM  RELEASE 5.7.1   *****
ANSYS/Mechanical U
00251976          VERSION=INTEL NT      11:31:47  DEC 23, 2005 CP=   1165.281

 Point Beach Strainer Inner Rim Plate Analysis


 ***** POST1 NODAL STRESS LISTING *****

 LOAD STEP=     4  SUBSTEP=    15
  TIME=    4.0000      LOAD CASE=   0
 SHELL NODAL RESULTS ARE AT BOTTOM
```

NODE	S1	S2	S3	SINT	SEQV
3041	8.4251	-2.9109	-344.82	353.25	347.72
3042	6.9021	-2.9116	-381.07	387.98	383.16
3043	5.3809	-2.9123	-417.45	422.83	418.75
3044	3.8614	-2.9130	-453.94	457.80	454.45
3045	2.3438	-2.9137	-490.52	492.86	490.25
3046	0.82824	-2.9144	-527.18	528.01	526.15
3047	-0.68505	-2.9151	-563.90	563.22	562.11
3048	-2.1958	-2.9158	-600.68	598.49	598.13
3049	-2.9165	-3.7037	-637.50	634.59	634.19
3050	-2.9172	-5.2086	-674.35	671.44	670.29
3051	-2.9179	-6.7102	-711.22	708.31	706.42
3052	-2.9186	-8.2082	-748.10	745.18	742.55
3053	-2.9193	-9.7025	-784.98	782.06	778.69
3054	-2.9200	-11.193	-821.85	818.93	814.83
3055	-2.9207	-12.680	-858.70	855.78	850.94
3056	-2.9214	-14.163	-895.53	892.61	887.04
3057	-2.9221	-15.642	-932.32	929.40	923.11
3058	-2.9228	-17.118	-969.08	966.16	959.14
3059	-2.9235	-18.591	-1005.8	1002.9	995.13
3060	-2.9242	-20.063	-1042.5	1039.5	1031.1
3061	-2.9249	-21.533	-1079.1	1076.1	1067.0
3062	375.15	19.062	-2.8972	378.04	367.56
3063	418.90	24.311	-2.8964	421.79	408.87
3064	460.31	28.101	-2.8956	463.20	448.51
3065	499.76	30.926	-2.8948	502.66	486.63
3066	537.08	33.066	-2.8941	539.98	522.92
3067	572.20	34.745	-2.8935	575.09	557.23
3068	605.12	36.102	-2.8928	608.01	589.48
3069	635.87	37.225	-2.8922	638.76	619.68
3070	664.49	38.170	-2.8917	667.38	647.83
3071	691.03	38.972	-2.8912	693.93	673.97
3072	715.54	39.657	-2.8907	718.43	698.13
3073	738.05	40.241	-2.8903	740.94	720.34
3074	758.60	40.736	-2.8899	761.49	740.64
3075	777.23	41.152	-2.8896	780.12	759.06
3076	793.98	41.495	-2.8892	796.87	775.63
3077	808.89	41.771	-2.8889	811.78	790.39
3078	821.98	41.986	-2.8887	824.87	803.37

1

```
***** ANSYS - ENGINEERING ANALYSIS SYSTEM  RELEASE 5.7.1   *****
ANSYS/Mechanical U
00251976          VERSION=INTEL NT      11:31:47  DEC 23, 2005 CP=   1165.281

 Point Beach Strainer Inner Rim Plate Analysis


 ***** POST1 NODAL STRESS LISTING *****

 LOAD STEP=     4  SUBSTEP=    15
  TIME=    4.0000      LOAD CASE=   0
 SHELL NODAL RESULTS ARE AT BOTTOM
```

NODE	S1	S2	S3	SINT	SEQV
3079	833.30	42.142	-2.8885	836.19	814.61
3080	842.88	42.244	-2.8883	845.77	824.13
3081	850.75	42.294	-2.8881	853.64	831.97
3082	856.96	42.295	-2.8880	859.85	838.17
3083	861.53	42.250	-2.8879	864.42	842.76
3084	864.50	42.160	-2.8879	867.39	845.77
3085	865.91	42.027	-2.8879	868.80	847.24
3086	865.79	41.853	-2.8879	868.68	847.20
3087	864.18	41.639	-2.8879	867.07	845.68
3088	861.11	41.388	-2.8880	863.99	842.73
3089	856.61	41.099	-2.8880	859.50	838.37
3090	850.72	40.776	-2.8881	853.61	832.64
3091	843.48	40.418	-2.8883	846.37	825.57
3092	834.92	40.026	-2.8884	837.81	817.19
3093	825.07	39.603	-2.8886	827.96	807.55
3094	813.97	39.148	-2.8888	816.85	796.67
3095	801.65	38.664	-2.8891	804.53	784.58
3096	788.14	38.150	-2.8893	791.03	771.33
3097	773.48	37.608	-2.8896	776.37	756.94
3098	757.71	37.039	-2.8899	760.60	741.44
3099	740.85	36.443	-2.8902	743.74	724.87
3100	722.94	35.821	-2.8906	725.83	707.27
3101	704.01	35.175	-2.8909	706.90	688.65
3102	684.09	34.504	-2.8913	686.98	669.06
3103	663.21	33.809	-2.8917	666.10	648.53
3104	641.41	33.091	-2.8921	644.31	627.09
3105	618.73	32.351	-2.8926	621.62	604.77
3106	595.17	31.589	-2.8930	598.07	581.59
3107	570.79	30.806	-2.8935	573.69	557.60
3108	545.62	30.001	-2.8940	548.51	532.82
3109	519.67	29.176	-2.8945	522.56	507.29
3110	492.98	28.329	-2.8950	495.88	481.02
3111	465.59	27.461	-2.8955	468.48	454.07
3112	437.51	26.572	-2.8960	440.41	426.44
3113	408.79	25.660	-2.8966	411.69	398.18
3114	379.45	24.723	-2.8971	382.35	369.31
3115	349.52	23.760	-2.8977	352.42	339.88
3116	319.04	22.767	-2.8983	321.94	309.90

1

```
***** ANSYS - ENGINEERING ANALYSIS SYSTEM  RELEASE 5.7.1   *****
ANSYS/Mechanical U
00251976          VERSION=INTEL NT      11:31:47  DEC 23, 2005 CP=   1165.297

 Point Beach Strainer Inner Rim Plate Analysis


 ***** POST1 NODAL STRESS LISTING *****

 LOAD STEP=     4  SUBSTEP=    15
  TIME=    4.0000      LOAD CASE=   0
 SHELL NODAL RESULTS ARE AT BOTTOM
```

NODE	S1	S2	S3	SINT	SEQV
3117	288.03	21.737	-2.8989	290.93	279.43
3118	256.54	20.661	-2.8995	259.44	248.50
3119	224.60	19.521	-2.9001	227.50	217.16
3120	192.28	18.291	-2.9007	195.18	185.49
3121	159.65	16.912	-2.9014	162.55	153.60
3122	126.85	15.266	-2.9020	129.75	121.69
3123	94.230	13.040	-2.9026	97.132	90.224
3124	62.821	9.2180	-2.9033	65.724	60.580
3125	36.731	-0.28106	-2.9041	39.635	38.391
3126	23.449	-2.9046	-22.925	46.374	40.286
3127	18.471	-2.9053	-54.186	72.657	64.675
3128	15.871	-2.9059	-88.119	103.99	95.989
3129	14.047	-2.9066	-123.10	137.15	129.50
3130	12.552	-2.9073	-158.66	171.21	164.03
3131	11.223	-2.9080	-194.62	205.84	199.15
3132	9.9899	-2.9087	-230.88	240.87	234.69
3133	8.8156	-2.9094	-267.40	276.21	270.54
3134	7.6807	-2.9101	-304.13	311.81	306.65
3135	6.5734	-2.9108	-341.05	347.62	342.98
3136	5.4863	-2.9115	-378.12	383.61	379.48
3137	4.4148	-2.9122	-415.34	419.76	416.14
3138	3.3555	-2.9129	-452.68	456.04	452.93
3139	2.3064	-2.9137	-490.12	492.43	489.84
3140	1.2658	-2.9144	-527.65	528.92	526.84
3141	0.23280	-2.9151	-565.25	565.49	563.92
3142	-0.79351	-2.9158	-602.92	602.12	601.06
3143	-1.8137	-2.9165	-640.62	638.81	638.26
3144	-2.8281	-2.9172	-678.37	675.54	675.49
3145	-2.9180	-3.8370	-716.13	713.21	712.75
3146	-2.9187	-4.8408	-753.90	750.99	750.03
3147	-2.9194	-5.8396	-791.68	788.76	787.31
3148	-2.9201	-6.8337	-829.45	826.53	824.58
3149	-2.9208	-7.8232	-867.20	864.28	861.84
3150	-2.9216	-8.8085	-904.93	902.01	899.08
3151	-2.9223	-9.7898	-942.63	939.70	936.29
3152	-2.9230	-10.768	-980.28	977.36	973.46
3153	-2.9237	-11.742	-1017.9	1015.0	1010.6
3154	-2.9244	-12.715	-1055.5	1052.5	1047.7

1

```
***** ANSYS - ENGINEERING ANALYSIS SYSTEM  RELEASE 5.7.1   *****
ANSYS/Mechanical U
00251976          VERSION=INTEL NT      11:31:47  DEC 23, 2005 CP=   1165.313

 Point Beach Strainer Inner Rim Plate Analysis


 ***** POST1 NODAL STRESS LISTING *****

 LOAD STEP=     4  SUBSTEP=    15
  TIME=    4.0000      LOAD CASE=   0
 SHELL NODAL RESULTS ARE AT BOTTOM
```

NODE	S1	S2	S3	SINT	SEQV
3155	-2.9251	-13.686	-1093.0	1090.0	1084.7
3156	418.13	4.3328	-2.8964	421.03	417.46
3157	462.34	7.6053	-2.8956	465.24	460.08
3158	505.65	9.8513	-2.8948	508.55	502.30
3159	546.72	11.431	-2.8940	549.62	542.60
3160	585.39	12.621	-2.8932	588.28	580.68
3161	621.69	13.551	-2.8925	624.58	616.52
3162	655.70	14.301	-2.8919	658.59	650.16
3163	687.48	14.917	-2.8913	690.38	681.65
3164	717.10	15.428	-2.8907	719.99	711.01
3165	744.59	15.856	-2.8902	747.48	738.28
3166	769.99	16.214	-2.8897	772.88	763.51
3167	793.34	16.513	-2.8893	796.23	786.71
3168	814.68	16.761	-2.8888	817.57	807.92
3169	834.04	16.962	-2.8885	836.93	827.18
3170	851.45	17.124	-2.8881	854.34	844.51
3171	866.95	17.248	-2.8878	869.83	859.94
3172	880.57	17.339	-2.8876	883.46	873.52
3173	892.35	17.399	-2.8874	895.24	885.27
3174	902.32	17.431	-2.8872	905.21	895.22
3175	910.53	17.436	-2.8870	913.41	903.42
3176	916.99	17.417	-2.8869	919.88	909.90
3177	921.76	17.375	-2.8868	924.65	914.68
3178	924.86	17.312	-2.8867	927.75	917.82
3179	926.34	17.227	-2.8867	929.23	919.33
3180	926.22	17.124	-2.8867	929.11	919.27
3181	924.55	17.002	-2.8867	927.44	917.65
3182	921.36	16.863	-2.8868	924.25	914.53
3183	916.68	16.707	-2.8869	919.57	909.93
3184	910.56	16.534	-2.8870	913.45	903.89
3185	903.02	16.347	-2.8872	905.91	896.45
3186	894.11	16.145	-2.8873	897.00	887.63
3187	883.86	15.928	-2.8875	886.74	877.49
3188	872.30	15.698	-2.8877	875.18	866.04
3189	859.47	15.454	-2.8880	862.36	853.33
3190	845.40	15.197	-2.8883	848.29	839.40
3191	830.14	14.927	-2.8885	833.03	824.27
3192	813.71	14.646	-2.8889	816.60	807.98

1

```
***** ANSYS - ENGINEERING ANALYSIS SYSTEM  RELEASE 5.7.1   *****
ANSYS/Mechanical U
00251976          VERSION=INTEL NT      11:31:47  DEC 23, 2005 CP=   1165.328

 Point Beach Strainer Inner Rim Plate Analysis


 ***** POST1 NODAL STRESS LISTING *****

 LOAD STEP=     4  SUBSTEP=    15
  TIME=    4.0000      LOAD CASE=   0
 SHELL NODAL RESULTS ARE AT BOTTOM
```

NODE	S1	S2	S3	SINT	SEQV
3193	796.15	14.351	-2.8892	799.04	790.56
3194	777.50	14.045	-2.8895	780.39	772.06
3195	757.78	13.727	-2.8899	760.67	752.50
3196	737.04	13.397	-2.8903	739.93	731.92
3197	715.30	13.055	-2.8907	718.19	710.35
3198	692.60	12.701	-2.8912	695.49	687.82
3199	668.97	12.335	-2.8916	671.86	664.38
3200	644.44	11.955	-2.8921	647.34	640.04
3201	619.06	11.563	-2.8926	621.95	614.85
3202	592.84	11.157	-2.8931	595.73	588.84
3203	565.83	10.736	-2.8936	568.72	562.03
3204	538.05	10.298	-2.8941	540.94	534.47
3205	509.54	9.8431	-2.8947	512.44	506.19
3206	480.33	9.3673	-2.8952	483.23	477.21
3207	450.45	8.8680	-2.8958	453.35	447.58
3208	419.94	8.3410	-2.8964	422.84	417.33
3209	388.83	7.7801	-2.8970	391.73	386.50
3210	357.16	7.1773	-2.8976	360.06	355.13
3211	324.97	6.5204	-2.8982	327.87	323.26
3212	292.30	5.7917	-2.8988	295.20	290.95
3213	259.21	4.9637	-2.8995	262.11	258.27
3214	225.77	3.9920	-2.9001	228.67	225.30
3215	192.08	2.8003	-2.9008	194.98	192.19
3216	158.31	1.2474	-2.9015	161.21	159.18
3217	124.77	-0.95386	-2.9022	127.67	126.71
3218	92.132	-2.9027	-4.4578	96.590	95.822
3219	62.071	-2.9035	-10.904	72.974	69.321
3220	38.266	-2.9042	-23.953	62.219	54.814
3221	24.065	-2.9049	-46.932	70.997	62.074
3222	16.998	-2.9056	-77.345	94.343	86.134
3223	13.222	-2.9063	-111.33	124.55	117.32
3224	10.888	-2.9070	-147.02	157.90	151.48
3225	9.2601	-2.9077	-183.65	192.91	187.12
3226	8.0190	-2.9085	-220.88	228.90	223.64
3227	7.0102	-2.9092	-258.55	265.56	260.75
3228	6.1510	-2.9099	-296.55	302.70	298.28
3229	5.3936	-2.9107	-334.82	340.21	336.14
3230	4.7088	-2.9114	-373.30	378.01	374.26

1

```
***** ANSYS - ENGINEERING ANALYSIS SYSTEM  RELEASE 5.7.1   *****
ANSYS/Mechanical U
00251976          VERSION=INTEL NT      11:31:47  DEC 23, 2005 CP=   1165.328

 Point Beach Strainer Inner Rim Plate Analysis


 ***** POST1 NODAL STRESS LISTING *****

 LOAD STEP=     4  SUBSTEP=    15
  TIME=    4.0000      LOAD CASE=   0
 SHELL NODAL RESULTS ARE AT BOTTOM
```

NODE	S1	S2	S3	SINT	SEQV
3231	4.0775	-2.9121	-411.97	416.05	412.60
3232	3.4869	-2.9129	-450.79	454.28	451.11
3233	2.9283	-2.9136	-489.74	492.67	489.77
3234	2.3952	-2.9144	-528.80	531.19	528.56
3235	1.8830	-2.9151	-567.94	569.83	567.44
3236	1.3882	-2.9159	-607.16	608.55	606.41
3237	0.90806	-2.9166	-646.44	647.35	645.44
3238	0.44055	-2.9174	-685.76	686.20	684.53
3239	-0.15973E-01	-2.9181	-725.11	725.09	723.65
3240	-0.46285	-2.9189	-764.47	764.01	762.79
3241	-0.90116	-2.9196	-803.85	802.95	801.94
3242	-1.3318	-2.9204	-843.22	841.88	841.09
3243	-1.7556	-2.9211	-882.57	880.82	880.23
3244	-2.1733	-2.9219	-921.90	919.73	919.36
3245	-2.5855	-2.9226	-961.20	958.62	958.45
3246	-2.9234	-2.9928	-1000.5	997.55	997.51
3247	-2.9241	-3.3959	-1039.7	1036.8	1036.5
3248	-2.9249	-3.7956	-1078.9	1075.9	1075.5
3249	-2.9256	-4.1925	-1118.0	1115.0	1114.4
3250	-2.9341	-3.0996	-1561.5	1558.6	1558.5
3251	-2.9341	-3.0993	-1561.5	1558.6	1558.5
3252	-2.9330	-12.169	-1503.5	1500.6	1496.0
3253	-2.9323	-28.491	-1466.7	1463.7	1451.1
3254	-2.9319	-41.422	-1446.3	1443.3	1424.5
3255	-2.9318	-46.247	-1439.7	1436.8	1415.7
3256	-2.9319	-41.422	-1446.3	1443.3	1424.5
3257	-2.9323	-28.490	-1466.7	1463.7	1451.1
3258	-2.9330	-12.169	-1503.5	1500.6	1496.0
3259	1382.6	-1.4883	-2.8783	1385.5	1384.8
3260	-2.9338	-3.0260	-1544.9	1541.9	1541.9
3261	-2.9335	-2.9427	-1526.5	1523.6	1523.6
3262	-2.8491	-2.9330	-1506.5	1503.6	1503.6
3263	-2.7444	-2.9326	-1484.8	1482.1	1482.0
3264	-2.6283	-2.9322	-1461.5	1458.9	1458.7
3265	-2.5003	-2.9317	-1436.5	1434.0	1433.8
3266	-2.3599	-2.9312	-1409.9	1407.6	1407.3
3267	-2.2065	-2.9306	-1381.7	1379.5	1379.2
3268	-2.0396	-2.9301	-1352.0	1349.9	1349.5

1

```
***** ANSYS - ENGINEERING ANALYSIS SYSTEM  RELEASE 5.7.1   *****
ANSYS/Mechanical U
00251976          VERSION=INTEL NT      11:31:47  DEC 23, 2005 CP=   1165.328

 Point Beach Strainer Inner Rim Plate Analysis


 ***** POST1 NODAL STRESS LISTING *****

 LOAD STEP=     4  SUBSTEP=    15
  TIME=    4.0000      LOAD CASE=   0
 SHELL NODAL RESULTS ARE AT BOTTOM
```

NODE	S1	S2	S3	SINT	SEQV
3269	-1.8583	-2.9295	-1320.6	1318.7	1318.2
3270	-1.6620	-2.9288	-1287.7	1286.0	1285.4
3271	-1.4497	-2.9282	-1253.2	1251.8	1251.1
3272	-1.2203	-2.9275	-1217.3	1216.1	1215.2
3273	-0.97257	-2.9268	-1179.9	1178.9	1178.0
3274	-0.70507	-2.9260	-1141.0	1140.3	1139.2
3275	-0.41603	-2.9253	-1100.8	1100.4	1099.1
3276	-0.10336	-2.9245	-1059.2	1059.1	1057.7
3277	0.23551	-2.9236	-1016.2	1016.4	1014.9
3278	0.60367	-2.9228	-971.96	972.56	970.80
3279	1.0050	-2.9219	-926.45	927.46	925.50
3280	1.4442	-2.9210	-879.75	881.20	879.02
3281	1.9275	-2.9201	-831.90	833.82	831.41
3282	2.4626	-2.9192	-782.94	785.40	782.72
3283	3.0597	-2.9182	-732.94	736.00	733.03
3284	3.7322	-2.9172	-681.96	685.70	682.40
3285	4.4982	-2.9162	-630.08	634.58	630.90
3286	5.3829	-2.9152	-577.36	582.74	578.64
3287	6.4220	-2.9142	-523.90	530.32	525.71
3288	7.6678	-2.9131	-469.81	477.47	472.27
3289	9.1997	-2.9121	-415.22	424.42	418.50
3290	11.144	-2.9110	-360.33	371.47	364.65
3291	13.712	-2.9099	-305.40	319.11	311.14
3292	17.278	-2.9088	-250.88	268.16	258.66
3293	22.556	-2.9077	-197.54	220.10	208.54
3294	30.970	-2.9065	-146.88	177.85	163.57
3295	45.329	-2.9054	-101.77	147.10	129.89
3296	69.865	-2.9043	-66.523	136.39	118.20
3297	106.89	-2.9031	-43.512	150.40	134.77
3298	153.67	-2.9020	-30.080	183.75	171.78
3299	206.03	-2.9009	-22.137	228.17	219.18
3300	261.31	-2.8997	-17.091	278.40	271.59
3301	318.13	-2.8986	-13.633	331.76	326.52
3302	375.73	-2.8974	-11.108	386.84	382.80
3303	433.71	-2.8963	-9.1658	442.87	439.77
3304	491.76	-2.8952	-7.6094	499.37	497.03
3305	549.70	-2.8940	-6.3194	556.02	554.31
3306	607.35	-2.8929	-5.2204	612.57	611.41

1

```
***** ANSYS - ENGINEERING ANALYSIS SYSTEM  RELEASE 5.7.1   *****
ANSYS/Mechanical U
00251976          VERSION=INTEL NT      11:31:47  DEC 23, 2005 CP=   1165.344

 Point Beach Strainer Inner Rim Plate Analysis


 ***** POST1 NODAL STRESS LISTING *****

 LOAD STEP=     4  SUBSTEP=    15
  TIME=    4.0000      LOAD CASE=   0
 SHELL NODAL RESULTS ARE AT BOTTOM
```

NODE	S1	S2	S3	SINT	SEQV
3307	664.59	-2.8918	-4.2626	668.85	668.16
3308	721.28	-2.8907	-3.4118	724.69	724.43
3309	777.32	-2.6439	-2.8897	780.21	780.09
3310	832.60	-1.9414	-2.8886	835.49	835.01
3311	887.01	-1.2912	-2.8875	889.90	889.10
3312	940.45	-0.68336	-2.8865	943.33	942.23
3313	992.81	-0.11020	-2.8855	995.70	994.31
3314	1044.0	0.43445	-2.8845	1046.9	1045.2
3315	1093.9	0.95572	-2.8836	1096.8	1094.9
3316	1142.5	1.4579	-2.8826	1145.4	1143.2
3317	1189.5	1.9447	-2.8817	1192.4	1190.0
3318	1235.0	2.4198	-2.8809	1237.9	1235.3
3319	1278.8	2.8866	-2.8800	1281.7	1278.9
3320	1320.9	3.3485	-2.8792	1323.8	1320.7
3321	1361.0	3.8093	-2.8785	1363.9	1360.6
3322	1399.2	4.2734	-2.8777	1402.1	1398.5
3323	1435.3	4.7454	-2.8770	1438.1	1434.3
3324	1469.1	5.2312	-2.8764	1472.0	1468.0
3325	1500.7	5.7375	-2.8758	1503.6	1499.3
3326	1529.9	6.2724	-2.8752	1532.8	1528.2
3327	1556.6	6.8457	-2.8747	1559.4	1554.6
3328	1580.6	7.4688	-2.8743	1583.5	1578.3
3329	1602.0	8.1549	-2.8738	1604.8	1599.3
3330	1620.5	8.9185	-2.8735	1623.4	1617.5
3331	1636.1	9.7747	-2.8732	1639.0	1632.7
3332	1648.7	10.737	-2.8730	1651.6	1644.8
3333	1658.2	11.811	-2.8728	1661.1	1653.8
3334	1664.5	12.990	-2.8727	1667.4	1659.5
3335	1667.5	14.231	-2.8726	1670.4	1661.9
3336	1666.9	15.437	-2.8726	1669.8	1660.7
3337	1662.4	16.416	-2.8727	1665.3	1655.7
3338	1653.2	16.841	-2.8729	1656.1	1646.3
3339	1637.8	16.269	-2.8732	1640.7	1631.2
3340	1613.6	14.142	-2.8737	1616.5	1608.0
3341	1575.8	10.246	-2.8745	1578.7	1572.2
3342	1517.1	3.8041	-2.8756	1519.9	1516.6
3343	1425.1	-1.6951	-2.8774	1428.0	1427.4
3344	1384.0	-2.8782	-5.5091	1389.5	1388.2

1

```
***** ANSYS - ENGINEERING ANALYSIS SYSTEM  RELEASE 5.7.1   *****
ANSYS/Mechanical U
00251976          VERSION=INTEL NT      11:31:47  DEC 23, 2005 CP=   1165.344

 Point Beach Strainer Inner Rim Plate Analysis


 ***** POST1 NODAL STRESS LISTING *****

 LOAD STEP=     4  SUBSTEP=    15
  TIME=    4.0000      LOAD CASE=   0
 SHELL NODAL RESULTS ARE AT BOTTOM
```

NODE	S1	S2	S3	SINT	SEQV
3345	1296.9	35.435	-2.8797	1299.8	1281.1
3346	1285.7	121.29	-2.8799	1288.6	1231.2
3347	1376.6	241.50	-2.8782	1379.5	1275.0
3348	1828.3	795.05	-2.8696	1831.2	1590.2
3349	1377.2	240.64	-2.8782	1380.1	1275.9
3350	1286.9	119.44	-2.8799	1289.7	1233.1
3351	1298.7	32.412	-2.8797	1301.6	1284.3
3352	1447.3	-2.8770	-16.501	1463.8	1457.0
3353	1522.3	-2.8755	-9.8314	1532.1	1528.6
3354	1574.9	-2.2664	-2.8745	1577.8	1577.5
3355	1610.7	4.1125	-2.8738	1613.6	1610.1
3356	1634.6	8.5598	-2.8733	1637.5	1631.8
3357	1650.3	11.175	-2.8730	1653.1	1646.1
3358	1659.9	12.392	-2.8728	1662.7	1655.2
3359	1664.8	12.687	-2.8727	1667.7	1660.0
3360	1665.8	12.436	-2.8726	1668.7	1661.1
3361	1663.2	11.896	-2.8727	1666.0	1658.7
3362	1657.2	11.221	-2.8728	1660.0	1653.0
3363	1647.9	10.500	-2.8730	1650.8	1644.1
3364	1635.5	9.7813	-2.8732	1638.4	1632.1
3365	1620.1	9.0866	-2.8735	1623.0	1617.0
3366	1601.7	8.4247	-2.8739	1604.6	1599.0
3367	1580.5	7.7971	-2.8743	1583.4	1578.1
3368	1556.6	7.2010	-2.8747	1559.5	1554.4
3369	1530.0	6.6323	-2.8752	1532.9	1528.1
3370	1500.9	6.0859	-2.8758	1503.8	1499.3
3371	1469.4	5.5574	-2.8764	1472.3	1468.1
3372	1435.5	5.0421	-2.8770	1438.4	1434.5
3373	1399.5	4.5363	-2.8777	1402.4	1398.7
3374	1361.3	4.0363	-2.8785	1364.2	1360.8
3375	1321.2	3.5389	-2.8792	1324.1	1320.9
3376	1279.2	3.0413	-2.8800	1282.0	1279.1
3377	1235.3	2.5406	-2.8809	1238.2	1235.5
3378	1189.8	2.0339	-2.8817	1192.7	1190.3
3379	1142.7	1.5183	-2.8826	1145.6	1143.4
3380	1094.2	0.99043	-2.8836	1097.1	1095.1
3381	1044.2	0.44672	-2.8845	1047.1	1045.5
3382	993.02	-0.11717	-2.8855	995.91	994.53

1

```
***** ANSYS - ENGINEERING ANALYSIS SYSTEM  RELEASE 5.7.1   *****
ANSYS/Mechanical U
00251976          VERSION=INTEL NT      11:31:47  DEC 23, 2005 CP=   1165.359

 Point Beach Strainer Inner Rim Plate Analysis


 ***** POST1 NODAL STRESS LISTING *****

 LOAD STEP=     4  SUBSTEP=    15
  TIME=    4.0000      LOAD CASE=   0
 SHELL NODAL RESULTS ARE AT BOTTOM
```

NODE	S1	S2	S3	SINT	SEQV
3383	940.64	-0.70642	-2.8865	943.52	942.43
3384	887.18	-1.3274	-2.8875	890.06	889.28
3385	832.75	-1.9879	-2.8886	835.63	835.18
3386	777.45	-2.6983	-2.8897	780.34	780.24
3387	721.39	-2.8907	-3.4719	724.86	724.57
3388	664.68	-2.8918	-4.3264	669.01	668.29
3389	607.43	-2.8929	-5.2861	612.72	611.52
3390	549.76	-2.8940	-6.3857	556.15	554.41
3391	491.82	-2.8952	-7.6750	499.49	497.12
3392	433.75	-2.8963	-9.2298	442.98	439.85
3393	375.77	-2.8974	-11.169	386.94	382.87
3394	318.16	-2.8986	-13.692	331.85	326.58
3395	261.34	-2.8997	-17.146	278.48	271.64
3396	206.05	-2.9009	-22.189	228.24	219.23
3397	153.68	-2.9020	-30.128	183.81	171.82
3398	106.90	-2.9031	-43.554	150.45	134.80
3399	69.865	-2.9043	-66.556	136.42	118.23
3400	45.321	-2.9054	-101.80	147.12	129.90
3401	30.958	-2.9065	-146.90	177.86	163.57
3402	22.542	-2.9077	-197.56	220.10	208.54
3403	17.265	-2.9088	-250.89	268.16	258.66
3404	13.699	-2.9099	-305.41	319.11	311.14
3405	11.133	-2.9110	-360.34	371.47	364.65
3406	9.1897	-2.9121	-415.23	424.42	418.50
3407	7.6592	-2.9131	-469.81	477.47	472.28
3408	6.4147	-2.9142	-523.91	530.32	525.72
3409	5.3768	-2.9152	-577.36	582.74	578.64
3410	4.4931	-2.9162	-630.08	634.58	630.90
3411	3.7280	-2.9172	-681.97	685.70	682.40
3412	3.0563	-2.9182	-732.94	736.00	733.03
3413	2.4599	-2.9192	-782.94	785.40	782.73
3414	1.9253	-2.9201	-831.90	833.82	831.41
3415	1.4425	-2.9210	-879.75	881.19	879.02
3416	1.0036	-2.9219	-926.46	927.46	925.50
3417	0.60254	-2.9228	-971.96	972.56	970.80
3418	0.23463	-2.9236	-1016.2	1016.4	1014.9
3419	-0.10400	-2.9245	-1059.2	1059.1	1057.7
3420	-0.41647	-2.9253	-1100.8	1100.4	1099.1

1

```
***** ANSYS - ENGINEERING ANALYSIS SYSTEM  RELEASE 5.7.1   *****
ANSYS/Mechanical U
00251976          VERSION=INTEL NT      11:31:47  DEC 23, 2005 CP=   1165.391

 Point Beach Strainer Inner Rim Plate Analysis


 ***** POST1 NODAL STRESS LISTING *****

 LOAD STEP=     4  SUBSTEP=    15
  TIME=    4.0000      LOAD CASE=   0
 SHELL NODAL RESULTS ARE AT BOTTOM
```

NODE	S1	S2	S3	SINT	SEQV
3421	-0.70529	-2.9260	-1141.0	1140.3	1139.2
3422	-0.97256	-2.9268	-1179.9	1178.9	1177.9
3423	-1.2200	-2.9275	-1217.3	1216.1	1215.2
3424	-1.4491	-2.9282	-1253.2	1251.8	1251.1
3425	-1.6612	-2.9288	-1287.7	1286.0	1285.4
3426	-1.8571	-2.9295	-1320.6	1318.7	1318.2
3427	-2.0380	-2.9301	-1352.0	1349.9	1349.5
3428	-2.2046	-2.9306	-1381.7	1379.5	1379.2
3429	-2.3576	-2.9312	-1409.9	1407.6	1407.3
3430	-2.4977	-2.9317	-1436.5	1434.0	1433.8
3431	-2.6255	-2.9322	-1461.5	1458.9	1458.7
3432	-2.7416	-2.9326	-1484.8	1482.1	1482.0
3433	-2.8465	-2.9330	-1506.5	1503.6	1503.6
3434	-2.9336	-2.9406	-1526.5	1523.6	1523.6
3435	-2.9338	-3.0250	-1544.9	1541.9	1541.9
3436	-2.9327	-11.995	-1487.8	1484.9	1480.4
3437	-2.9323	-11.801	-1470.6	1467.6	1463.2
3438	-2.9320	-11.586	-1451.7	1448.8	1444.5
3439	-2.9316	-11.349	-1431.3	1428.4	1424.2
3440	-2.9312	-11.090	-1409.4	1406.4	1402.4
3441	-2.9307	-10.810	-1385.9	1382.9	1379.0
3442	-2.9302	-10.506	-1360.8	1357.9	1354.1
3443	-2.9297	-10.181	-1334.3	1331.4	1327.8
3444	-2.9292	-9.8321	-1306.3	1303.3	1299.9
3445	-2.9286	-9.4604	-1276.7	1273.8	1270.6
3446	-2.9281	-9.0653	-1245.8	1242.8	1239.8
3447	-2.9274	-8.6466	-1213.3	1210.4	1207.6
3448	-2.9268	-8.2039	-1179.5	1176.6	1173.9
3449	-2.9261	-7.7369	-1144.3	1141.3	1139.0
3450	-2.9254	-7.2452	-1107.7	1104.8	1102.6
3451	-2.9247	-6.7283	-1069.8	1066.9	1065.0
3452	-2.9239	-6.1854	-1030.6	1027.6	1026.0
3453	-2.9232	-5.6157	-990.10	987.18	985.83
3454	-2.9224	-5.0181	-948.40	945.48	944.44
3455	-2.9216	-4.3913	-905.52	902.60	901.87
3456	-2.9207	-3.7335	-861.49	858.57	858.17
3457	-2.9198	-3.0424	-816.36	813.44	813.38
3458	-2.3149	-2.9190	-770.18	767.86	767.56

1

```
***** ANSYS - ENGINEERING ANALYSIS SYSTEM  RELEASE 5.7.1   *****
ANSYS/Mechanical U
00251976          VERSION=INTEL NT      11:31:47  DEC 23, 2005 CP=   1165.391

 Point Beach Strainer Inner Rim Plate Analysis


 ***** POST1 NODAL STRESS LISTING *****

 LOAD STEP=     4  SUBSTEP=    15
  TIME=    4.0000      LOAD CASE=   0
 SHELL NODAL RESULTS ARE AT BOTTOM
```

NODE	S1	S2	S3	SINT	SEQV
3459	-1.5472	-2.9181	-722.98	721.44	720.75
3460	-0.73375	-2.9171	-674.84	674.10	673.01
3461	0.13260	-2.9162	-625.79	625.92	624.40
3462	1.0620	-2.9152	-575.90	576.97	574.99
3463	2.0687	-2.9143	-525.25	527.31	524.84
3464	3.1737	-2.9133	-473.89	477.06	474.05
3465	4.4085	-2.9123	-421.93	426.33	422.72
3466	5.8226	-2.9113	-369.46	375.28	370.99
3467	7.4981	-2.9102	-316.62	324.12	319.05
3468	9.5798	-2.9092	-263.64	273.22	267.19
3469	12.346	-2.9082	-210.83	223.18	215.95
3470	16.388	-2.9071	-158.86	175.25	166.44
3471	23.119	-2.9060	-109.21	132.33	121.43
3472	36.106	-2.9050	-65.512	101.62	88.791
3473	61.846	-2.9039	-34.329	96.175	84.941
3474	102.19	-2.9028	-17.584	119.77	113.15
3475	150.97	-2.9017	-9.1788	160.15	157.11
3476	203.37	-2.9006	-4.3712	207.74	207.01
3477	257.35	-1.1903	-2.8997	260.25	259.40
3478	312.02	1.1603	-2.8986	314.92	312.91
3479	366.97	3.0404	-2.8975	369.86	366.93
3480	421.92	4.6311	-2.8964	424.81	421.10
3481	476.69	6.0321	-2.8954	479.59	475.19
3482	531.16	7.3026	-2.8943	534.05	529.03
3483	585.19	8.4796	-2.8933	588.08	582.48
3484	638.68	9.5874	-2.8923	641.57	635.42
3485	691.53	10.643	-2.8912	694.42	687.75
3486	743.64	11.657	-2.8902	746.53	739.36
3487	794.92	12.639	-2.8893	797.80	790.16
3488	845.26	13.596	-2.8883	848.15	840.03
3489	894.59	14.531	-2.8874	897.48	888.90
3490	942.80	15.450	-2.8864	945.69	936.66
3491	989.80	16.355	-2.8855	992.69	983.21
3492	1035.5	17.250	-2.8847	1038.4	1028.5
3493	1079.8	18.138	-2.8838	1082.7	1072.3
3494	1122.6	19.022	-2.8830	1125.5	1114.7
3495	1163.8	19.904	-2.8822	1166.7	1155.5
3496	1203.3	20.789	-2.8815	1206.2	1194.6

1

***** ANSYS - ENGINEERING ANALYSIS SYSTEM RELEASE 5.7.1 *****
ANSYS/Mechanical U
00251976 VERSION=INTEL NT 11:31:47 DEC 23, 2005 CP= 1165.406

Point Beach Strainer Inner Rim Plate Analysis

***** POST1 NODAL STRESS LISTING *****

LOAD STEP= 4 SUBSTEP= 15
TIME= 4.0000 LOAD CASE= 0
SHELL NODAL RESULTS ARE AT BOTTOM

NODE	S1	S2	S3	SINT	SEQV
3497	1241.1	21.681	-2.8807	1243.9	1231.8
3498	1276.9	22.585	-2.8800	1279.8	1267.3
3499	1310.8	23.508	-2.8794	1313.7	1300.7
3500	1342.6	24.458	-2.8788	1345.4	1332.0
3501	1372.1	25.444	-2.8782	1375.0	1361.1
3502	1399.4	26.480	-2.8777	1402.3	1387.9
3503	1424.4	27.579	-2.8772	1427.2	1412.2
3504	1446.8	28.761	-2.8768	1449.6	1434.1
3505	1466.6	30.046	-2.8764	1469.5	1453.3
3506	1483.7	31.460	-2.8761	1486.6	1469.7
3507	1498.1	33.028	-2.8758	1501.0	1483.3
3508	1509.6	34.779	-2.8756	1512.5	1494.0
3509	1518.1	36.733	-2.8754	1521.0	1501.6
3510	1523.6	38.898	-2.8753	1526.5	1506.0
3511	1526.0	41.249	-2.8753	1528.9	1507.3
3512	1525.3	43.694	-2.8753	1528.2	1505.5
3513	1521.4	46.017	-2.8754	1524.3	1500.4
3514	1514.0	47.776	-2.8756	1516.9	1492.2
3515	1502.4	48.206	-2.8758	1505.3	1480.4
3516	1485.1	46.249	-2.8762	1488.0	1464.0
3517	1458.4	40.939	-2.8767	1461.3	1439.8
3518	1416.0	32.379	-2.8775	1418.9	1401.6
3519	1349.6	22.945	-2.8788	1352.5	1339.8
3520	-2.9320	-28.090	-1451.6	1448.7	1436.3
3521	-2.9317	-27.645	-1435.0	1432.1	1419.9
3522	-2.9313	-27.154	-1417.0	1414.0	1402.1
3523	-2.9309	-26.617	-1397.4	1394.5	1382.8
3524	-2.9305	-26.034	-1376.3	1373.4	1362.0
3525	-2.9301	-25.405	-1353.8	1350.8	1339.8
3526	-2.9297	-24.729	-1329.8	1326.8	1316.1
3527	-2.9292	-24.008	-1304.3	1301.4	1291.0
3528	-2.9287	-23.240	-1277.4	1274.5	1264.4
3529	-2.9281	-22.427	-1249.1	1246.1	1236.5
3530	-2.9276	-21.568	-1219.3	1216.4	1207.2
3531	-2.9270	-20.664	-1188.2	1185.3	1176.5
3532	-2.9263	-19.716	-1155.7	1152.8	1144.5
3533	-2.9257	-18.723	-1121.9	1119.0	1111.2
3534	-2.9250	-17.686	-1086.8	1083.9	1076.6

1

```
***** ANSYS - ENGINEERING ANALYSIS SYSTEM  RELEASE 5.7.1   *****
ANSYS/Mechanical U
00251976          VERSION=INTEL NT      11:31:47  DEC 23, 2005 CP=   1165.422

 Point Beach Strainer Inner Rim Plate Analysis


 ***** POST1 NODAL STRESS LISTING *****

 LOAD STEP=     4  SUBSTEP=    15
  TIME=    4.0000      LOAD CASE=   0
 SHELL NODAL RESULTS ARE AT BOTTOM
```

NODE	S1	S2	S3	SINT	SEQV
3535	-2.9243	-16.606	-1050.4	1047.5	1040.7
3536	-2.9236	-15.483	-1012.8	1009.8	1003.6
3537	-2.9229	-14.317	-973.90	970.97	965.33
3538	-2.9221	-13.109	-933.85	930.93	925.88
3539	-2.9213	-11.859	-892.66	889.74	885.30
3540	-2.9205	-10.568	-850.36	847.44	843.64
3541	-2.9197	-9.2360	-806.99	804.07	800.94
3542	-2.9188	-7.8624	-762.60	759.68	757.22
3543	-2.9180	-6.4472	-717.23	714.31	712.55
3544	-2.9171	-4.9897	-670.92	668.00	666.97
3545	-2.9162	-3.4887	-623.72	620.80	620.52
3546	-1.9423	-2.9153	-575.69	573.75	573.26
3547	-0.34704	-2.9143	-526.87	526.53	525.25
3548	1.3020	-2.9134	-477.33	478.63	476.54
3549	3.0132	-2.9124	-427.13	430.14	427.21
3550	4.7995	-2.9115	-376.34	381.14	377.34
3551	6.6832	-2.9105	-325.03	331.71	327.02
3552	8.7035	-2.9095	-273.30	282.01	276.38
3553	10.935	-2.9085	-221.30	232.23	225.63
3554	13.535	-2.9075	-169.23	182.77	175.13
3555	16.899	-2.9065	-117.56	134.46	125.74
3556	22.257	-2.9054	-67.591	89.848	80.281
3557	34.558	-2.9044	-24.327	58.885	51.623
3558	65.866	0.96545E-01	-2.9036	68.769	67.319
3559	112.57	9.2218	-2.9024	115.47	109.91
3560	163.88	13.760	-2.9013	166.78	159.11
3561	216.56	16.884	-2.9003	219.46	210.27
3562	269.69	19.435	-2.8993	272.59	262.14
3563	322.91	21.702	-2.8983	325.81	314.24
3564	376.02	23.808	-2.8972	378.92	366.30
3565	428.88	25.813	-2.8962	431.78	418.16
3566	481.38	27.751	-2.8952	484.28	469.70
3567	533.42	29.641	-2.8942	536.31	520.81
3568	584.90	31.493	-2.8932	587.80	571.38
3569	635.75	33.314	-2.8923	638.64	621.33
3570	685.87	35.109	-2.8913	688.76	670.56
3571	735.17	36.882	-2.8904	738.06	718.99
3572	783.56	38.635	-2.8894	786.45	766.53

1

```
***** ANSYS - ENGINEERING ANALYSIS SYSTEM  RELEASE 5.7.1   *****
ANSYS/Mechanical U
00251976          VERSION=INTEL NT      11:31:48  DEC 23, 2005 CP=   1165.422

 Point Beach Strainer Inner Rim Plate Analysis


 ***** POST1 NODAL STRESS LISTING *****

 LOAD STEP=     4  SUBSTEP=    15
  TIME=    4.0000      LOAD CASE=   0
 SHELL NODAL RESULTS ARE AT BOTTOM
```

NODE	S1	S2	S3	SINT	SEQV
3573	830.97	40.368	-2.8885	833.86	813.09
3574	877.29	42.084	-2.8877	880.18	858.58
3575	922.45	43.784	-2.8868	925.34	902.91
3576	966.36	45.470	-2.8860	969.24	945.99
3577	1008.9	47.143	-2.8851	1011.8	987.74
3578	1050.0	48.806	-2.8844	1052.9	1028.0
3579	1089.6	50.464	-2.8836	1092.5	1066.8
3580	1127.6	52.120	-2.8829	1130.5	1104.0
3581	1163.9	53.781	-2.8822	1166.7	1139.5
3582	1198.3	55.456	-2.8815	1201.2	1173.1
3583	1230.9	57.155	-2.8809	1233.7	1204.8
3584	1261.4	58.893	-2.8803	1264.3	1234.6
3585	1289.9	60.689	-2.8798	1292.7	1262.2
3586	1316.1	62.566	-2.8793	1319.0	1287.5
3587	1340.1	64.556	-2.8788	1343.0	1310.6
3588	1361.7	66.696	-2.8784	1364.6	1331.2
3589	1380.8	69.036	-2.8781	1383.7	1349.2
3590	1397.4	71.637	-2.8777	1400.3	1364.5
3591	1411.3	74.572	-2.8775	1414.2	1377.1
3592	1422.4	77.931	-2.8773	1425.3	1386.7
3593	1430.7	81.819	-2.8771	1433.6	1393.2
3594	1436.1	86.353	-2.8770	1439.0	1396.5
3595	1438.6	91.657	-2.8770	1441.5	1396.6
3596	1438.2	97.844	-2.8770	1441.0	1393.4
3597	1434.8	104.99	-2.8770	1437.7	1386.9
3598	1428.9	113.05	-2.8772	1431.8	1377.5
3599	1420.6	121.65	-2.8773	1423.5	1365.5
3600	1410.5	129.50	-2.8776	1413.4	1352.1
3601	1397.7	133.58	-2.8778	1400.6	1337.6
3602	1376.0	129.43	-2.8783	1378.9	1317.7
3603	1327.3	114.26	-2.8792	1330.2	1275.6
3604	-2.9316	-40.823	-1431.6	1428.6	1410.1
3605	-2.9313	-40.158	-1415.4	1412.4	1394.2
3606	-2.9310	-39.426	-1397.7	1394.8	1376.9
3607	-2.9306	-38.629	-1378.6	1375.7	1358.2
3608	-2.9302	-37.764	-1358.1	1355.1	1338.1
3609	-2.9298	-36.833	-1336.1	1333.1	1316.5
3610	-2.9293	-35.836	-1312.6	1309.7	1293.5

1

```
***** ANSYS - ENGINEERING ANALYSIS SYSTEM  RELEASE 5.7.1   *****
ANSYS/Mechanical U
00251976          VERSION=INTEL NT      11:31:48  DEC 23, 2005 CP=   1165.438

 Point Beach Strainer Inner Rim Plate Analysis


 ***** POST1 NODAL STRESS LISTING *****

 LOAD STEP=     4  SUBSTEP=    15
  TIME=    4.0000      LOAD CASE=   0
 SHELL NODAL RESULTS ARE AT BOTTOM
```

NODE	S1	S2	S3	SINT	SEQV
3611	-2.9289	-34.772	-1287.7	1284.8	1269.2
3612	-2.9284	-33.643	-1261.5	1258.5	1243.5
3613	-2.9278	-32.448	-1233.8	1230.9	1216.4
3614	-2.9273	-31.188	-1204.8	1201.8	1188.0
3615	-2.9267	-29.865	-1174.4	1171.5	1158.2
3616	-2.9261	-28.479	-1142.7	1139.7	1127.2
3617	-2.9255	-27.031	-1109.7	1106.7	1094.9
3618	-2.9248	-25.521	-1075.4	1072.4	1061.3
3619	-2.9241	-23.952	-1039.8	1036.9	1026.5
3620	-2.9234	-22.323	-1003.0	1000.1	990.56
3621	-2.9227	-20.637	-965.08	962.16	953.43
3622	-2.9220	-18.894	-925.97	923.05	915.16
3623	-2.9212	-17.096	-885.73	882.81	875.81
3624	-2.9204	-15.244	-844.41	841.49	835.39
3625	-2.9196	-13.340	-802.04	799.12	793.96
3626	-2.9188	-11.384	-758.66	755.74	751.54
3627	-2.9179	-9.3795	-714.32	711.40	708.19
3628	-2.9171	-7.3263	-669.05	666.14	663.94
3629	-2.9162	-5.2264	-622.91	620.00	618.85
3630	-2.9153	-3.0809	-575.95	573.03	572.95
3631	-0.89098	-2.9144	-528.20	527.31	526.30
3632	1.3426	-2.9135	-479.72	481.06	478.95
3633	3.6194	-2.9125	-430.57	434.19	430.96
3634	5.9401	-2.9116	-380.80	386.74	382.39
3635	8.3067	-2.9106	-330.46	338.77	333.30
3636	10.724	-2.9097	-279.63	290.36	283.79
3637	13.204	-2.9087	-228.38	241.58	233.94
3638	15.769	-2.9077	-176.78	192.55	183.92
3639	18.482	-2.9067	-124.97	143.45	134.04
3640	21.537	-2.9057	-73.195	94.732	85.183
3641	25.933	-2.9046	-22.531	48.464	42.223
3642	43.090	15.536	-2.9038	45.994	40.092
3643	89.529	24.420	-2.9027	92.431	82.247
3644	141.21	28.088	-2.9017	144.11	131.39
3645	193.56	31.043	-2.9007	196.46	181.88
3646	246.00	33.782	-2.8997	248.90	232.74
3647	298.35	36.430	-2.8987	301.25	283.63
3648	350.48	39.028	-2.8977	353.37	334.39

1

```
***** ANSYS - ENGINEERING ANALYSIS SYSTEM  RELEASE 5.7.1   *****
ANSYS/Mechanical U
00251976          VERSION=INTEL NT      11:31:48  DEC 23, 2005 CP=   1165.453

 Point Beach Strainer Inner Rim Plate Analysis


 ***** POST1 NODAL STRESS LISTING *****

 LOAD STEP=     4  SUBSTEP=    15
  TIME=    4.0000      LOAD CASE=   0
 SHELL NODAL RESULTS ARE AT BOTTOM
```

NODE	S1	S2	S3	SINT	SEQV
3649	402.29	41.593	-2.8967	405.19	384.88
3650	453.71	44.134	-2.8957	456.60	435.00
3651	504.64	46.655	-2.8947	507.54	484.67
3652	555.02	49.156	-2.8938	557.91	533.79
3653	604.75	51.637	-2.8928	607.64	582.30
3654	653.76	54.098	-2.8919	656.65	630.09
3655	701.96	56.538	-2.8910	704.85	677.09
3656	749.27	58.956	-2.8901	752.16	723.22
3657	795.61	61.351	-2.8892	798.50	768.39
3658	840.89	63.722	-2.8883	843.78	812.52
3659	885.03	66.070	-2.8875	887.91	855.52
3660	927.93	68.393	-2.8867	930.82	897.31
3661	969.53	70.695	-2.8859	972.41	937.79
3662	1009.7	72.975	-2.8851	1012.6	976.88
3663	1048.4	75.239	-2.8844	1051.3	1014.5
3664	1085.5	77.490	-2.8837	1088.4	1050.5
3665	1121.0	79.736	-2.8830	1123.9	1084.9
3666	1154.7	81.986	-2.8824	1157.5	1117.5
3667	1186.5	84.255	-2.8818	1189.4	1148.3
3668	1216.4	86.560	-2.8812	1219.3	1177.1
3669	1244.2	88.924	-2.8807	1247.1	1203.8
3670	1270.0	91.380	-2.8802	1272.8	1228.4
3671	1293.4	93.967	-2.8797	1296.3	1250.7
3672	1314.6	96.738	-2.8793	1317.5	1270.6
3673	1333.4	99.762	-2.8790	1336.3	1288.0
3674	1349.6	103.13	-2.8786	1352.5	1302.8
3675	1363.3	106.94	-2.8784	1366.2	1314.7
3676	1374.2	111.36	-2.8782	1377.1	1323.7
3677	1382.4	116.55	-2.8780	1385.2	1329.5
3678	1387.6	122.77	-2.8779	1390.5	1332.1
3679	1389.9	130.30	-2.8779	1392.7	1331.2
3680	1389.1	139.55	-2.8779	1392.0	1326.5
3681	1385.4	150.99	-2.8780	1388.3	1318.1
3682	1379.0	165.31	-2.8781	1381.9	1306.0
3683	1370.5	183.47	-2.8783	1373.4	1290.3
3684	1361.6	207.08	-2.8785	1364.5	1272.5
3685	1356.8	237.95	-2.8786	1359.6	1256.7
3686	1365.8	272.54	-2.8784	1368.6	1253.8

1

```
***** ANSYS - ENGINEERING ANALYSIS SYSTEM  RELEASE 5.7.1   *****
ANSYS/Mechanical U
00251976          VERSION=INTEL NT      11:31:48  DEC 23, 2005 CP=   1165.484

 Point Beach Strainer Inner Rim Plate Analysis


 ***** POST1 NODAL STRESS LISTING *****

 LOAD STEP=     4  SUBSTEP=    15
  TIME=    4.0000      LOAD CASE=   0
 SHELL NODAL RESULTS ARE AT BOTTOM
```

NODE	S1	S2	S3	SINT	SEQV
3687	1397.1	285.01	-2.8779	1400.0	1280.5
3688	-2.9315	-45.571	-1425.2	1422.2	1401.4
3689	-2.9312	-44.822	-1409.1	1406.2	1385.7
3690	-2.9308	-43.998	-1391.6	1388.7	1368.6
3691	-2.9305	-43.100	-1372.6	1369.7	1350.1
3692	-2.9301	-42.128	-1352.2	1349.3	1330.1
3693	-2.9297	-41.081	-1330.4	1327.5	1308.8
3694	-2.9292	-39.960	-1307.1	1304.2	1286.1
3695	-2.9288	-38.765	-1282.5	1279.5	1262.0
3696	-2.9283	-37.496	-1256.4	1253.5	1236.5
3697	-2.9277	-36.155	-1228.9	1226.0	1209.8
3698	-2.9272	-34.742	-1200.1	1197.2	1181.6
3699	-2.9266	-33.258	-1170.0	1167.1	1152.2
3700	-2.9260	-31.704	-1138.5	1135.6	1121.5
3701	-2.9254	-30.081	-1105.8	1102.8	1089.5
3702	-2.9247	-28.390	-1071.7	1068.8	1056.3
3703	-2.9241	-26.632	-1036.5	1033.5	1021.9
3704	-2.9234	-24.810	-999.97	997.04	986.28
3705	-2.9227	-22.923	-962.30	959.38	949.53
3706	-2.9219	-20.974	-923.48	920.56	911.67
3707	-2.9212	-18.965	-883.55	880.63	872.72
3708	-2.9204	-16.896	-842.54	839.62	832.72
3709	-2.9196	-14.771	-800.49	797.57	791.72
3710	-2.9188	-12.590	-757.44	754.53	749.74
3711	-2.9179	-10.355	-713.44	710.52	706.83
3712	-2.9171	-8.0696	-668.51	665.59	663.03
3713	-2.9162	-5.7345	-622.71	619.80	618.39
3714	-2.9153	-3.3522	-576.09	573.17	572.96
3715	-0.92494	-2.9144	-528.69	527.76	526.77
3716	1.5449	-2.9135	-480.56	482.10	479.89
3717	4.0550	-2.9126	-431.75	435.81	432.37
3718	6.6029	-2.9116	-382.32	388.93	384.26
3719	9.1861	-2.9107	-332.32	341.51	335.62
3720	11.802	-2.9097	-281.80	293.61	286.53
3721	14.448	-2.9087	-230.83	245.28	237.08
3722	17.121	-2.9077	-179.46	196.58	187.37
3723	19.819	-2.9068	-127.75	147.56	137.62
3724	22.539	-2.9058	-75.756	98.295	88.364

1

```
***** ANSYS - ENGINEERING ANALYSIS SYSTEM  RELEASE 5.7.1   *****
ANSYS/Mechanical U
00251976          VERSION=INTEL NT      11:31:48  DEC 23, 2005 CP=   1165.484

 Point Beach Strainer Inner Rim Plate Analysis


 ***** POST1 NODAL STRESS LISTING *****

 LOAD STEP=     4  SUBSTEP=    15
  TIME=    4.0000      LOAD CASE=   0
 SHELL NODAL RESULTS ARE AT BOTTOM
```

NODE	S1	S2	S3	SINT	SEQV
3725	25.278	-2.9047	-23.553	48.830	42.456
3726	28.801	28.032	-2.9039	31.705	31.328
3727	81.239	30.800	-2.9028	84.142	73.348
3728	133.69	33.578	-2.9018	136.60	122.50
3729	186.10	36.363	-2.9008	189.00	172.75
3730	238.38	39.152	-2.8998	241.28	223.24
3731	290.47	41.942	-2.8988	293.37	273.72
3732	342.29	44.730	-2.8978	345.19	324.01
3733	393.78	47.513	-2.8969	396.68	374.03
3734	444.85	50.288	-2.8959	447.75	423.67
3735	495.44	53.052	-2.8949	498.33	472.85
3736	545.46	55.803	-2.8940	548.35	521.49
3737	594.83	58.536	-2.8930	597.73	569.50
3738	643.49	61.251	-2.8921	646.38	616.81
3739	691.34	63.944	-2.8912	694.23	663.34
3740	738.30	66.613	-2.8903	741.19	709.00
3741	784.30	69.256	-2.8894	787.19	753.71
3742	829.24	71.872	-2.8886	832.13	797.38
3743	873.05	74.460	-2.8877	875.94	839.94
3744	915.65	77.019	-2.8869	918.53	881.30
3745	956.93	79.551	-2.8861	959.82	921.37
3746	996.83	82.056	-2.8854	999.71	960.07
3747	1035.2	84.538	-2.8846	1038.1	997.29
3748	1072.1	87.003	-2.8839	1075.0	1033.0
3749	1107.3	89.456	-2.8833	1110.2	1067.0
3750	1140.7	91.910	-2.8826	1143.6	1099.3
3751	1172.3	94.377	-2.8820	1175.2	1129.7
3752	1202.0	96.878	-2.8815	1204.9	1158.2
3753	1229.7	99.438	-2.8809	1232.6	1184.7
3754	1255.2	102.09	-2.8804	1258.1	1209.0
3755	1278.6	104.88	-2.8800	1281.5	1231.1
3756	1299.6	107.87	-2.8796	1302.5	1250.8
3757	1318.3	111.14	-2.8792	1321.2	1268.0
3758	1334.5	114.77	-2.8789	1337.3	1282.6
3759	1348.0	118.92	-2.8787	1350.9	1294.3
3760	1358.9	123.73	-2.8785	1361.8	1303.1
3761	1366.9	129.45	-2.8783	1369.8	1308.7
3762	1372.1	136.36	-2.8782	1375.0	1310.9

1

```
***** ANSYS - ENGINEERING ANALYSIS SYSTEM  RELEASE 5.7.1   *****
ANSYS/Mechanical U
00251976          VERSION=INTEL NT      11:31:48  DEC 23, 2005 CP=   1165.500

 Point Beach Strainer Inner Rim Plate Analysis


 ***** POST1 NODAL STRESS LISTING *****

 LOAD STEP=     4  SUBSTEP=    15
  TIME=    4.0000      LOAD CASE=   0
 SHELL NODAL RESULTS ARE AT BOTTOM
```

NODE	S1	S2	S3	SINT	SEQV
3763	1374.2	144.85	-2.8782	1377.1	1309.5
3764	1373.2	155.45	-2.8782	1376.1	1304.1
3765	1369.1	168.89	-2.8783	1372.0	1294.6
3766	1362.0	186.18	-2.8784	1364.9	1280.9
3767	1352.7	208.67	-2.8786	1355.6	1263.2
3768	1342.3	238.20	-2.8788	1345.2	1242.3
3769	1333.4	278.67	-2.8790	1336.3	1220.1
3770	1333.7	345.04	-2.8790	1336.5	1201.0
3771	1377.3	490.71	-2.8782	1380.2	1211.4
3772	-2.9316	-40.823	-1431.6	1428.6	1410.1
3773	-2.9313	-40.158	-1415.4	1412.4	1394.2
3774	-2.9310	-39.427	-1397.7	1394.8	1376.9
3775	-2.9306	-38.629	-1378.6	1375.7	1358.2
3776	-2.9302	-37.765	-1358.1	1355.1	1338.1
3777	-2.9298	-36.834	-1336.1	1333.1	1316.5
3778	-2.9293	-35.836	-1312.6	1309.7	1293.5
3779	-2.9289	-34.772	-1287.7	1284.8	1269.2
3780	-2.9284	-33.643	-1261.5	1258.5	1243.5
3781	-2.9278	-32.448	-1233.8	1230.9	1216.4
3782	-2.9273	-31.188	-1204.8	1201.8	1188.0
3783	-2.9267	-29.865	-1174.4	1171.5	1158.2
3784	-2.9261	-28.479	-1142.7	1139.7	1127.2
3785	-2.9255	-27.030	-1109.7	1106.7	1094.9
3786	-2.9248	-25.521	-1075.4	1072.4	1061.3
3787	-2.9241	-23.951	-1039.8	1036.9	1026.5
3788	-2.9234	-22.322	-1003.0	1000.1	990.56
3789	-2.9227	-20.636	-965.08	962.16	953.43
3790	-2.9220	-18.893	-925.97	923.05	915.16
3791	-2.9212	-17.095	-885.73	882.81	875.81
3792	-2.9204	-15.243	-844.41	841.49	835.39
3793	-2.9196	-13.339	-802.04	799.12	793.96
3794	-2.9188	-11.383	-758.66	755.74	751.54
3795	-2.9179	-9.3778	-714.32	711.40	708.19
3796	-2.9171	-7.3243	-669.05	666.14	663.94
3797	-2.9162	-5.2238	-622.91	620.00	618.85
3798	-2.9153	-3.0777	-575.95	573.03	572.95
3799	-0.88708	-2.9144	-528.20	527.31	526.30
3800	1.3473	-2.9135	-479.72	481.07	478.95

1

```
***** ANSYS - ENGINEERING ANALYSIS SYSTEM  RELEASE 5.7.1   *****
ANSYS/Mechanical U
00251976          VERSION=INTEL NT      11:31:48  DEC 23, 2005 CP=   1165.516

 Point Beach Strainer Inner Rim Plate Analysis


 ***** POST1 NODAL STRESS LISTING *****

 LOAD STEP=     4  SUBSTEP=    15
  TIME=    4.0000      LOAD CASE=   0
 SHELL NODAL RESULTS ARE AT BOTTOM
```

NODE	S1	S2	S3	SINT	SEQV
3801	3.6252	-2.9125	-430.57	434.19	430.96
3802	5.9471	-2.9116	-380.80	386.74	382.39
3803	8.3151	-2.9106	-330.46	338.78	333.31
3804	10.734	-2.9097	-279.63	290.37	283.79
3805	13.215	-2.9087	-228.38	241.59	233.95
3806	15.783	-2.9077	-176.78	192.56	183.93
3807	18.498	-2.9067	-124.97	143.47	134.05
3808	21.556	-2.9057	-73.198	94.754	85.199
3809	25.953	-2.9046	-22.535	48.488	42.245
3810	43.100	15.545	-2.9038	46.004	40.100
3811	89.528	24.441	-2.9027	92.430	82.241
3812	141.20	28.114	-2.9017	144.11	131.37
3813	193.55	31.071	-2.9007	196.45	181.86
3814	246.00	33.814	-2.8997	248.90	232.72
3815	298.34	36.464	-2.8987	301.24	283.61
3816	350.47	39.064	-2.8977	353.36	334.36
3817	402.28	41.632	-2.8967	405.18	384.85
3818	453.69	44.174	-2.8957	456.59	434.97
3819	504.63	46.696	-2.8947	507.52	484.64
3820	555.00	49.197	-2.8938	557.90	533.76
3821	604.73	51.677	-2.8928	607.62	582.26
3822	653.74	54.136	-2.8919	656.63	630.05
3823	701.94	56.573	-2.8910	704.83	677.06
3824	749.25	58.986	-2.8901	752.14	723.19
3825	795.58	61.374	-2.8892	798.47	768.36
3826	840.86	63.738	-2.8883	843.75	812.49
3827	885.00	66.075	-2.8875	887.89	855.49
3828	927.91	68.387	-2.8867	930.80	897.29
3829	969.50	70.674	-2.8859	972.39	937.78
3830	1009.7	72.938	-2.8851	1012.6	976.88
3831	1048.4	75.183	-2.8844	1051.3	1014.5
3832	1085.5	77.414	-2.8837	1088.4	1050.6
3833	1121.0	79.638	-2.8830	1123.9	1084.9
3834	1154.7	81.866	-2.8824	1157.5	1117.6
3835	1186.5	84.112	-2.8818	1189.4	1148.4
3836	1216.4	86.394	-2.8812	1219.3	1177.2
3837	1244.3	88.737	-2.8807	1247.1	1204.0
3838	1270.0	91.176	-2.8802	1272.9	1228.6

1

```
***** ANSYS - ENGINEERING ANALYSIS SYSTEM  RELEASE 5.7.1   *****
ANSYS/Mechanical U
00251976          VERSION=INTEL NT      11:31:48  DEC 23, 2005 CP=   1165.547

 Point Beach Strainer Inner Rim Plate Analysis


 ***** POST1 NODAL STRESS LISTING *****

 LOAD STEP=     4  SUBSTEP=    15
  TIME=    4.0000      LOAD CASE=   0
 SHELL NODAL RESULTS ARE AT BOTTOM
```

NODE	S1	S2	S3	SINT	SEQV
3839	1293.5	93.751	-2.8797	1296.4	1250.9
3840	1314.7	96.520	-2.8793	1317.6	1270.8
3841	1333.5	99.556	-2.8790	1336.4	1288.2
3842	1349.8	102.95	-2.8786	1352.7	1303.0
3843	1363.4	106.83	-2.8784	1366.3	1314.9
3844	1374.4	111.35	-2.8782	1377.3	1323.9
3845	1382.5	116.71	-2.8780	1385.4	1329.6
3846	1387.7	123.16	-2.8779	1390.6	1332.1
3847	1389.9	131.03	-2.8779	1392.8	1330.9
3848	1389.0	140.73	-2.8779	1391.9	1326.0
3849	1385.1	152.76	-2.8780	1388.0	1317.1
3850	1378.3	167.75	-2.8781	1381.2	1304.3
3851	1369.4	186.61	-2.8783	1372.3	1288.0
3852	1360.0	210.79	-2.8785	1362.9	1269.6
3853	1354.8	241.85	-2.8786	1357.7	1253.4
3854	1363.4	275.94	-2.8785	1366.2	1250.4
3855	1394.6	287.67	-2.8779	1397.4	1277.2
3856	-2.9320	-28.090	-1451.6	1448.7	1436.3
3857	-2.9317	-27.645	-1435.0	1432.1	1419.9
3858	-2.9313	-27.155	-1417.0	1414.0	1402.1
3859	-2.9309	-26.618	-1397.4	1394.5	1382.8
3860	-2.9305	-26.035	-1376.3	1373.4	1362.0
3861	-2.9301	-25.406	-1353.8	1350.9	1339.8
3862	-2.9297	-24.730	-1329.8	1326.8	1316.1
3863	-2.9292	-24.008	-1304.3	1301.4	1291.0
3864	-2.9287	-23.240	-1277.4	1274.5	1264.4
3865	-2.9281	-22.427	-1249.1	1246.1	1236.5
3866	-2.9276	-21.568	-1219.3	1216.4	1207.2
3867	-2.9270	-20.664	-1188.2	1185.3	1176.5
3868	-2.9263	-19.715	-1155.7	1152.8	1144.5
3869	-2.9257	-18.722	-1121.9	1119.0	1111.2
3870	-2.9250	-17.685	-1086.8	1083.9	1076.6
3871	-2.9243	-16.605	-1050.4	1047.5	1040.7
3872	-2.9236	-15.482	-1012.8	1009.8	1003.6
3873	-2.9229	-14.316	-973.90	970.97	965.33
3874	-2.9221	-13.108	-933.85	930.93	925.88
3875	-2.9213	-11.858	-892.66	889.74	885.30
3876	-2.9205	-10.567	-850.36	847.44	843.64

1

```
***** ANSYS - ENGINEERING ANALYSIS SYSTEM  RELEASE 5.7.1   *****
ANSYS/Mechanical U
00251976          VERSION=INTEL NT      11:31:48  DEC 23, 2005 CP=   1165.547

 Point Beach Strainer Inner Rim Plate Analysis


 ***** POST1 NODAL STRESS LISTING *****

 LOAD STEP=     4  SUBSTEP=    15
  TIME=    4.0000      LOAD CASE=   0
 SHELL NODAL RESULTS ARE AT BOTTOM
```

NODE	S1	S2	S3	SINT	SEQV
3877	-2.9197	-9.2341	-806.99	804.07	800.94
3878	-2.9188	-7.8601	-762.60	759.68	757.22
3879	-2.9180	-6.4443	-717.23	714.31	712.55
3880	-2.9171	-4.9861	-670.92	668.00	666.97
3881	-2.9162	-3.4843	-623.72	620.80	620.52
3882	-1.9368	-2.9153	-575.69	573.75	573.26
3883	-0.34037	-2.9143	-526.87	526.53	525.25
3884	1.3102	-2.9134	-477.33	478.64	476.54
3885	3.0230	-2.9124	-427.13	430.15	427.22
3886	4.8113	-2.9115	-376.34	381.15	377.34
3887	6.6972	-2.9105	-325.03	331.72	327.03
3888	8.7198	-2.9095	-273.30	282.02	276.39
3889	10.954	-2.9085	-221.30	232.25	225.64
3890	13.557	-2.9075	-169.23	182.79	175.14
3891	16.923	-2.9065	-117.57	134.49	125.75
3892	22.281	-2.9054	-67.590	89.871	80.297
3893	34.575	-2.9044	-24.316	58.892	51.630
3894	65.866	0.12701	-2.9036	68.770	67.306
3895	112.56	9.2624	-2.9024	115.46	109.89
3896	163.87	13.806	-2.9013	166.77	159.08
3897	216.55	16.936	-2.9003	219.45	210.23
3898	269.68	19.491	-2.8993	272.58	262.10
3899	322.89	21.761	-2.8983	325.79	314.19
3900	376.00	23.871	-2.8972	378.90	366.25
3901	428.86	25.879	-2.8962	431.75	418.11
3902	481.35	27.820	-2.8952	484.24	469.64
3903	533.38	29.710	-2.8942	536.28	520.74
3904	584.87	31.561	-2.8932	587.76	571.31
3905	635.71	33.380	-2.8923	638.60	621.26
3906	685.82	35.172	-2.8913	688.71	670.49
3907	735.11	36.939	-2.8904	738.00	718.92
3908	783.50	38.682	-2.8894	786.39	766.45
3909	830.91	40.404	-2.8885	833.79	813.01
3910	877.23	42.106	-2.8877	880.12	858.50
3911	922.39	43.788	-2.8868	925.27	902.84
3912	966.29	45.452	-2.8860	969.17	945.93
3913	1008.8	47.100	-2.8851	1011.7	987.69
3914	1050.0	48.736	-2.8844	1052.9	1028.0

1

```
***** ANSYS - ENGINEERING ANALYSIS SYSTEM  RELEASE 5.7.1   *****
ANSYS/Mechanical U
00251976          VERSION=INTEL NT      11:31:48  DEC 23, 2005 CP=   1165.563

 Point Beach Strainer Inner Rim Plate Analysis


 ***** POST1 NODAL STRESS LISTING *****

 LOAD STEP=     4  SUBSTEP=    15
  TIME=    4.0000      LOAD CASE=   0
 SHELL NODAL RESULTS ARE AT BOTTOM
```

NODE	S1	S2	S3	SINT	SEQV
3915	1089.6	50.361	-2.8836	1092.4	1066.8
3916	1127.5	51.983	-2.8829	1130.4	1104.0
3917	1163.8	53.607	-2.8822	1166.7	1139.5
3918	1198.3	55.243	-2.8815	1201.2	1173.2
3919	1230.8	56.903	-2.8809	1233.7	1204.9
3920	1261.4	58.604	-2.8803	1264.3	1234.7
3921	1289.9	60.365	-2.8798	1292.8	1262.3
3922	1316.2	62.215	-2.8793	1319.1	1287.8
3923	1340.2	64.188	-2.8788	1343.1	1310.9
3924	1361.9	66.329	-2.8784	1364.8	1331.5
3925	1381.1	68.694	-2.8781	1383.9	1349.6
3926	1397.7	71.354	-2.8777	1400.5	1364.9
3927	1411.6	74.401	-2.8775	1414.5	1377.5
3928	1422.8	77.941	-2.8773	1425.7	1387.0
3929	1431.2	82.108	-2.8771	1434.0	1393.5
3930	1436.6	87.051	-2.8770	1439.4	1396.6
3931	1439.0	92.933	-2.8770	1441.8	1396.4
3932	1438.3	99.906	-2.8770	1441.2	1392.7
3933	1434.7	108.07	-2.8770	1437.5	1385.4
3934	1428.1	117.38	-2.8772	1431.0	1374.8
3935	1419.0	127.37	-2.8774	1421.9	1361.4
3936	1407.8	136.53	-2.8776	1410.7	1346.4
3937	1394.0	141.32	-2.8779	1396.9	1330.7
3938	1372.1	136.55	-2.8783	1375.0	1310.8
3939	1323.4	117.93	-2.8792	1326.3	1270.2
3940	-2.9327	-11.996	-1487.8	1484.9	1480.4
3941	-2.9323	-11.802	-1470.6	1467.6	1463.2
3942	-2.9320	-11.587	-1451.7	1448.8	1444.5
3943	-2.9316	-11.351	-1431.3	1428.4	1424.2
3944	-2.9312	-11.092	-1409.4	1406.4	1402.4
3945	-2.9307	-10.811	-1385.9	1382.9	1379.0
3946	-2.9302	-10.508	-1360.8	1357.9	1354.1
3947	-2.9297	-10.182	-1334.3	1331.4	1327.8
3948	-2.9292	-9.8330	-1306.3	1303.3	1299.9
3949	-2.9286	-9.4610	-1276.7	1273.8	1270.6
3950	-2.9281	-9.0656	-1245.8	1242.8	1239.8
3951	-2.9274	-8.6465	-1213.3	1210.4	1207.6
3952	-2.9268	-8.2036	-1179.5	1176.6	1173.9

1

```
***** ANSYS - ENGINEERING ANALYSIS SYSTEM  RELEASE 5.7.1   *****
ANSYS/Mechanical U
00251976          VERSION=INTEL NT      11:31:48  DEC 23, 2005 CP=   1165.563

 Point Beach Strainer Inner Rim Plate Analysis


 ***** POST1 NODAL STRESS LISTING *****

 LOAD STEP=     4  SUBSTEP=    15
  TIME=    4.0000      LOAD CASE=   0
 SHELL NODAL RESULTS ARE AT BOTTOM
```

NODE	S1	S2	S3	SINT	SEQV
3953	-2.9261	-7.7365	-1144.3	1141.4	1139.0
3954	-2.9254	-7.2446	-1107.7	1104.8	1102.6
3955	-2.9247	-6.7275	-1069.8	1066.9	1065.0
3956	-2.9239	-6.1844	-1030.6	1027.6	1026.0
3957	-2.9232	-5.6146	-990.10	987.18	985.83
3958	-2.9224	-5.0168	-948.40	945.48	944.44
3959	-2.9216	-4.3897	-905.52	902.60	901.87
3960	-2.9207	-3.7316	-861.49	858.57	858.17
3961	-2.9198	-3.0401	-816.36	813.44	813.38
3962	-2.3121	-2.9190	-770.17	767.86	767.56
3963	-1.5437	-2.9181	-722.98	721.44	720.75
3964	-0.72956	-2.9171	-674.83	674.10	673.01
3965	0.13773	-2.9162	-625.79	625.92	624.40
3966	1.0682	-2.9152	-575.90	576.97	574.99
3967	2.0763	-2.9143	-525.24	527.32	524.84
3968	3.1827	-2.9133	-473.89	477.07	474.05
3969	4.4192	-2.9123	-421.92	426.34	422.72
3970	5.8351	-2.9113	-369.45	375.29	370.99
3971	7.5126	-2.9102	-316.62	324.13	319.05
3972	9.5962	-2.9092	-263.63	273.23	267.19
3973	12.364	-2.9082	-210.82	223.19	215.96
3974	16.407	-2.9071	-158.86	175.26	166.45
3975	23.136	-2.9060	-109.20	132.34	121.43
3976	36.116	-2.9050	-65.492	101.61	88.781
3977	61.844	-2.9039	-34.295	96.139	84.913
3978	102.18	-2.9028	-17.539	119.72	113.11
3979	150.95	-2.9017	-9.1275	160.08	157.06
3980	203.35	-2.9006	-4.3151	207.66	206.96
3981	257.32	-1.1300	-2.8997	260.22	259.34
3982	311.99	1.2244	-2.8986	314.89	312.85
3983	366.93	3.1078	-2.8975	369.83	366.86
3984	421.87	4.7012	-2.8964	424.77	421.02
3985	476.64	6.1040	-2.8954	479.54	475.10
3986	531.10	7.3752	-2.8943	533.99	528.93
3987	585.12	8.5516	-2.8933	588.01	582.38
3988	638.60	9.6572	-2.8923	641.49	635.31
3989	691.44	10.708	-2.8912	694.33	687.63
3990	743.54	11.716	-2.8902	746.43	739.24

1

```
***** ANSYS - ENGINEERING ANALYSIS SYSTEM  RELEASE 5.7.1   *****
ANSYS/Mechanical U
00251976          VERSION=INTEL NT      11:31:48  DEC 23, 2005 CP=   1165.563

 Point Beach Strainer Inner Rim Plate Analysis


 ***** POST1 NODAL STRESS LISTING *****

 LOAD STEP=     4  SUBSTEP=    15
  TIME=    4.0000     LOAD CASE=   0
 SHELL NODAL RESULTS ARE AT BOTTOM
```

NODE	S1	S2	S3	SINT	SEQV
3991	794.81	12.689	-2.8893	797.70	790.02
3992	845.15	13.634	-2.8883	848.04	839.90
3993	894.46	14.554	-2.8874	897.35	888.76
3994	942.67	15.455	-2.8864	945.55	936.52
3995	989.66	16.338	-2.8855	992.54	983.07
3996	1035.3	17.208	-2.8847	1038.2	1028.3
3997	1079.6	18.067	-2.8838	1082.5	1072.2
3998	1122.4	18.918	-2.8830	1125.3	1114.6
3999	1163.7	19.765	-2.8822	1166.5	1155.4
4000	1203.2	20.612	-2.8815	1206.1	1194.5
4001	1240.9	21.464	-2.8807	1243.8	1231.8
4002	1276.8	22.327	-2.8800	1279.7	1267.3
4003	1310.7	23.210	-2.8794	1313.6	1300.7
4004	1342.5	24.123	-2.8788	1345.4	1332.1
4005	1372.1	25.078	-2.8782	1375.0	1361.2
4006	1399.5	26.092	-2.8777	1402.4	1388.1
4007	1424.5	27.184	-2.8772	1427.3	1412.5
4008	1447.0	28.379	-2.8768	1449.8	1434.5
4009	1466.9	29.708	-2.8764	1469.8	1453.7
4010	1484.1	31.207	-2.8761	1487.0	1470.3
4011	1498.6	32.921	-2.8758	1501.5	1483.9
4012	1510.2	34.898	-2.8756	1513.1	1494.6
4013	1518.9	37.189	-2.8754	1521.8	1502.1
4014	1524.5	39.841	-2.8753	1527.4	1506.5
4015	1527.0	42.876	-2.8753	1529.9	1507.6
4016	1526.3	46.256	-2.8753	1529.2	1505.3
4017	1522.2	49.816	-2.8754	1525.1	1499.5
4018	1514.4	53.148	-2.8756	1517.3	1490.0
4019	1501.9	55.469	-2.8758	1504.8	1476.5
4020	1482.9	55.568	-2.8762	1485.8	1457.5
4021	1453.6	52.085	-2.8768	1456.5	1429.8
4022	1408.2	44.135	-2.8776	1411.1	1388.2
4023	1342.0	32.548	-2.8789	1344.8	1327.5
4024	1314.7	-0.60451	-2.8802	1317.6	1316.4
4025	1152.5	-2.8819	-3.8753	1156.4	1155.9
4026	986.93	-2.8858	-8.3648	995.30	992.57
4027	818.78	-2.8892	-14.040	832.82	827.30
4028	652.11	-2.8925	-23.436	675.55	665.52

1

```
***** ANSYS - ENGINEERING ANALYSIS SYSTEM  RELEASE 5.7.1   *****
ANSYS/Mechanical U
00251976          VERSION=INTEL NT      11:31:48  DEC 23, 2005 CP=   1165.578

 Point Beach Strainer Inner Rim Plate Analysis


 ***** POST1 NODAL STRESS LISTING *****

 LOAD STEP=     4  SUBSTEP=    15
  TIME=    4.0000      LOAD CASE=   0
 SHELL NODAL RESULTS ARE AT BOTTOM
```

NODE	S1	S2	S3	SINT	SEQV
4029	491.84	-2.8958	-38.298	530.14	513.35
4030	344.31	-2.8991	-62.710	407.02	380.65
4031	220.01	-2.9022	-105.69	325.70	288.39
4032	132.38	-2.9053	-179.85	312.23	271.20
4033	82.020	-2.9082	-285.45	367.47	333.23
4034	54.576	-2.9110	-408.03	462.60	436.71
4035	38.401	-2.9138	-535.95	574.35	554.85
4036	27.912	-2.9164	-663.73	691.64	676.75
4037	20.591	-2.9189	-788.93	809.52	798.03
4038	15.208	-2.9213	-910.45	925.66	916.73
4039	11.104	-2.9236	-1027.7	1038.9	1031.9
4040	7.8924	-2.9258	-1140.5	1148.4	1143.1
4041	5.3313	-2.9279	-1248.7	1254.0	1249.9
4042	3.2600	-2.9299	-1352.2	1355.5	1352.4
4043	1.5672	-2.9318	-1451.0	1452.6	1450.3
4044	0.17275	-2.9336	-1545.2	1545.3	1543.8
4045	-0.98242	-2.9353	-1634.7	1633.7	1632.7
4046	-1.9432	-2.9370	-1719.7	1717.7	1717.3
4047	-2.7443	-2.9385	-1800.2	1797.5	1797.4
4048	-2.9400	-3.4128	-1876.3	1873.4	1873.1
4049	-2.9414	-3.9702	-1948.1	1945.1	1944.6
4050	-2.9427	-4.4339	-2015.6	2012.7	2011.9
4051	-2.9439	-4.8181	-2079.0	2076.1	2075.1
4052	-2.9450	-5.1343	-2138.3	2135.4	2134.3
4053	-2.9461	-5.3921	-2193.7	2190.7	2189.5
4054	-2.9471	-5.5993	-2245.1	2242.2	2240.9
4055	-2.9480	-5.7627	-2292.8	2289.9	2288.5
4056	-2.9488	-5.8880	-2336.8	2333.9	2332.4
4057	-2.9496	-5.9797	-2377.2	2374.2	2372.7
4058	-2.9503	-6.0421	-2414.1	2411.1	2409.6
4059	-2.9509	-6.0786	-2447.5	2444.6	2443.0
4060	-2.9515	-6.0922	-2477.7	2474.7	2473.2
4061	-2.9520	-6.0855	-2504.6	2501.7	2500.1
4062	-2.9525	-6.0607	-2528.4	2525.4	2523.9
4063	-2.9529	-6.0200	-2549.1	2546.2	2544.7
4064	-2.9532	-5.9649	-2566.9	2564.0	2562.5
4065	-2.9535	-5.8970	-2581.9	2578.9	2577.4
4066	-2.9537	-5.8178	-2594.0	2591.1	2589.6

1

```
***** ANSYS - ENGINEERING ANALYSIS SYSTEM  RELEASE 5.7.1   *****
ANSYS/Mechanical U
00251976          VERSION=INTEL NT      11:31:48  DEC 23, 2005 CP=   1165.594

 Point Beach Strainer Inner Rim Plate Analysis


 ***** POST1 NODAL STRESS LISTING *****

 LOAD STEP=     4  SUBSTEP=    15
  TIME=    4.0000      LOAD CASE=   0
 SHELL NODAL RESULTS ARE AT BOTTOM
```

NODE	S1	S2	S3	SINT	SEQV
4067	-2.9539	-5.7283	-2603.5	2600.5	2599.1
4068	-2.9540	-5.6298	-2610.4	2607.4	2606.1
4069	-2.9541	-5.5232	-2614.7	2611.8	2610.5
4070	-2.9542	-5.4093	-2616.7	2613.7	2612.5
4071	-2.9542	-5.2890	-2616.3	2613.3	2612.1
4072	-2.9541	-5.1630	-2613.6	2610.6	2609.5
4073	-2.9540	-5.0320	-2608.8	2605.8	2604.8
4074	-2.9539	-4.8965	-2601.8	2598.9	2597.9
4075	-2.9537	-4.7572	-2592.9	2589.9	2589.0
4076	-2.9535	-4.6146	-2582.0	2579.1	2578.2
4077	-2.9533	-4.4691	-2569.3	2566.3	2565.6
4078	-2.9530	-4.3211	-2554.8	2551.8	2551.1
4079	-2.9527	-4.1712	-2538.6	2535.6	2535.0
4080	-2.9523	-4.0196	-2520.7	2517.7	2517.2
4081	-2.9520	-3.8668	-2501.3	2498.3	2497.9
4082	-2.9516	-3.7130	-2480.4	2477.4	2477.0
4083	-2.9511	-3.5586	-2458.1	2455.1	2454.8
4084	-2.9507	-3.4038	-2434.4	2431.4	2431.2
4085	-2.9502	-3.2490	-2409.4	2406.5	2406.3
4086	-2.9497	-3.0943	-2383.2	2380.3	2380.2
4087	-2.9403	-2.9489	-2355.9	2352.9	2352.9
4088	-2.7863	-2.9486	-2327.4	2324.6	2324.6
4089	-2.6334	-2.9481	-2297.9	2295.3	2295.1
4090	-2.4815	-2.9475	-2267.5	2265.0	2264.8
4091	-2.3307	-2.9469	-2236.1	2233.8	2233.4
4092	-2.1812	-2.9463	-2203.8	2201.6	2201.3
4093	-2.0331	-2.9457	-2170.7	2168.7	2168.3
4094	-1.8865	-2.9450	-2136.9	2135.0	2134.5
4095	-1.7415	-2.9444	-2102.4	2100.6	2100.0
4096	-1.5983	-2.9437	-2067.1	2065.5	2064.9
4097	-1.4569	-2.9430	-2031.3	2029.8	2029.1
4098	-1.3174	-2.9423	-1994.9	1993.6	1992.8
4099	-1.1797	-2.9416	-1957.9	1956.8	1955.9
4100	-1.0440	-2.9409	-1920.5	1919.4	1918.5
4101	-0.91016	-2.9402	-1882.6	1881.7	1880.7
4102	-0.77827	-2.9394	-1844.3	1843.5	1842.4
4103	-0.64828	-2.9387	-1805.6	1805.0	1803.8
4104	-0.52013	-2.9380	-1766.6	1766.0	1764.8

1

```
***** ANSYS - ENGINEERING ANALYSIS SYSTEM  RELEASE 5.7.1   *****
ANSYS/Mechanical U
00251976          VERSION=INTEL NT      11:31:48  DEC 23, 2005 CP=   1165.594

 Point Beach Strainer Inner Rim Plate Analysis


 ***** POST1 NODAL STRESS LISTING *****

 LOAD STEP=     4  SUBSTEP=    15
  TIME=    4.0000      LOAD CASE=   0
 SHELL NODAL RESULTS ARE AT BOTTOM
```

NODE	S1	S2	S3	SINT	SEQV
4105	-0.39376	-2.9372	-1727.2	1726.8	1725.5
4106	-0.26908	-2.9364	-1687.6	1687.3	1686.0
4107	-0.14596	-2.9357	-1647.7	1647.5	1646.1
4108	-0.24270E-01	-2.9349	-1607.5	1607.5	1606.1
4109	0.96177E-01	-2.9342	-1567.2	1567.3	1565.8
4110	0.21559	-2.9334	-1526.7	1526.9	1525.3
4111	0.33422	-2.9326	-1486.0	1486.3	1484.7
4112	0.45236	-2.9318	-1445.2	1445.6	1443.9
4113	0.57035	-2.9310	-1404.2	1404.8	1403.0
4114	0.68861	-2.9303	-1363.1	1363.8	1362.0
4115	0.80760	-2.9295	-1321.9	1322.7	1320.9
4116	0.92791	-2.9287	-1280.6	1281.6	1279.7
4117	1.0502	-2.9279	-1239.3	1240.3	1238.3
4118	1.0450	-2.9279	-1239.3	1240.3	1238.3
4119	0.92092	-2.9287	-1280.7	1281.6	1279.7
4120	0.79971	-2.9295	-1321.9	1322.7	1320.9
4121	0.68050	-2.9303	-1363.1	1363.8	1362.0
4122	0.56257	-2.9310	-1404.2	1404.8	1403.0
4123	0.44526	-2.9318	-1445.2	1445.6	1443.9
4124	0.32805	-2.9326	-1486.0	1486.3	1484.7
4125	0.21046	-2.9334	-1526.7	1526.9	1525.3
4126	0.92137E-01	-2.9342	-1567.2	1567.3	1565.8
4127	-0.27251E-01	-2.9349	-1607.6	1607.5	1606.1
4128	-0.14796	-2.9357	-1647.7	1647.5	1646.1
4129	-0.27019	-2.9364	-1687.6	1687.3	1686.0
4130	-0.39411	-2.9372	-1727.2	1726.8	1725.6
4131	-0.51984	-2.9380	-1766.6	1766.0	1764.8
4132	-0.64749	-2.9387	-1805.6	1805.0	1803.8
4133	-0.77711	-2.9394	-1844.3	1843.5	1842.4
4134	-0.90874	-2.9402	-1882.6	1881.7	1880.7
4135	-1.0424	-2.9409	-1920.5	1919.5	1918.5
4136	-1.1781	-2.9416	-1957.9	1956.8	1955.9
4137	-1.3158	-2.9423	-1994.9	1993.6	1992.8
4138	-1.4555	-2.9430	-2031.3	2029.8	2029.1
4139	-1.5971	-2.9437	-2067.1	2065.5	2064.9
4140	-1.7406	-2.9444	-2102.4	2100.6	2100.0
4141	-1.8858	-2.9450	-2136.9	2135.0	2134.5
4142	-2.0327	-2.9457	-2170.7	2168.7	2168.3

1

```
***** ANSYS - ENGINEERING ANALYSIS SYSTEM  RELEASE 5.7.1   *****
ANSYS/Mechanical U
00251976          VERSION=INTEL NT      11:31:48  DEC 23, 2005 CP=   1165.594

 Point Beach Strainer Inner Rim Plate Analysis


 ***** POST1 NODAL STRESS LISTING *****

 LOAD STEP=     4  SUBSTEP=    15
  TIME=    4.0000      LOAD CASE=   0
 SHELL NODAL RESULTS ARE AT BOTTOM
```

NODE	S1	S2	S3	SINT	SEQV
4143	-2.1811	-2.9463	-2203.8	2201.6	2201.3
4144	-2.3310	-2.9469	-2236.1	2233.8	2233.4
4145	-2.4821	-2.9475	-2267.5	2265.0	2264.8
4146	-2.6344	-2.9481	-2297.9	2295.3	2295.1
4147	-2.7875	-2.9486	-2327.4	2324.6	2324.6
4148	-2.9418	-2.9489	-2355.9	2352.9	2352.9
4149	-2.9497	-3.0959	-2383.2	2380.3	2380.2
4150	-2.9502	-3.2506	-2409.4	2406.5	2406.3
4151	-2.9507	-3.4054	-2434.4	2431.4	2431.2
4152	-2.9511	-3.5600	-2458.1	2455.1	2454.8
4153	-2.9516	-3.7141	-2480.4	2477.4	2477.0
4154	-2.9520	-3.8673	-2501.3	2498.3	2497.9
4155	-2.9523	-4.0193	-2520.7	2517.7	2517.2
4156	-2.9527	-4.1698	-2538.5	2535.6	2535.0
4157	-2.9530	-4.3184	-2554.8	2551.8	2551.1
4158	-2.9533	-4.4647	-2569.3	2566.3	2565.6
4159	-2.9535	-4.6081	-2582.0	2579.0	2578.2
4160	-2.9537	-4.7483	-2592.9	2589.9	2589.0
4161	-2.9539	-4.8848	-2601.8	2598.9	2597.9
4162	-2.9540	-5.0169	-2608.7	2605.8	2604.8
4163	-2.9541	-5.1441	-2613.6	2610.6	2609.5
4164	-2.9542	-5.2659	-2616.2	2613.3	2612.1
4165	-2.9542	-5.3815	-2616.6	2613.7	2612.5
4166	-2.9541	-5.4902	-2614.7	2611.7	2610.5
4167	-2.9540	-5.5913	-2610.3	2607.4	2606.1
4168	-2.9539	-5.6841	-2603.5	2600.5	2599.1
4169	-2.9537	-5.7676	-2594.0	2591.0	2589.6
4170	-2.9535	-5.8408	-2581.8	2578.9	2577.4
4171	-2.9532	-5.9029	-2566.9	2564.0	2562.5
4172	-2.9529	-5.9527	-2549.1	2546.2	2544.7
4173	-2.9525	-5.9890	-2528.4	2525.4	2523.9
4174	-2.9520	-6.0104	-2504.6	2501.7	2500.1
4175	-2.9515	-6.0154	-2477.7	2474.8	2473.2
4176	-2.9509	-6.0023	-2447.6	2444.6	2443.1
4177	-2.9503	-5.9691	-2414.1	2411.2	2409.7
4178	-2.9496	-5.9136	-2377.3	2374.3	2372.8
4179	-2.9488	-5.8329	-2336.9	2333.9	2332.5
4180	-2.9480	-5.7238	-2292.9	2290.0	2288.6

1

```
***** ANSYS - ENGINEERING ANALYSIS SYSTEM  RELEASE 5.7.1   *****
ANSYS/Mechanical U
00251976          VERSION=INTEL NT      11:31:48  DEC 23, 2005 CP=   1165.594

 Point Beach Strainer Inner Rim Plate Analysis


 ***** POST1 NODAL STRESS LISTING *****

 LOAD STEP=     4  SUBSTEP=    15
  TIME=    4.0000      LOAD CASE=   0
 SHELL NODAL RESULTS ARE AT BOTTOM
```

NODE	S1	S2	S3	SINT	SEQV
4181	-2.9471	-5.5826	-2245.3	2242.3	2241.0
4182	-2.9461	-5.4043	-2193.8	2190.9	2189.7
4183	-2.9450	-5.1833	-2138.5	2135.6	2134.5
4184	-2.9439	-4.9123	-2079.3	2076.3	2075.3
4185	-2.9427	-4.5825	-2015.9	2013.0	2012.1
4186	-2.9414	-4.1825	-1948.4	1945.5	1944.9
4187	-2.9400	-3.6984	-1876.7	1873.7	1873.4
4188	-2.9385	-3.1123	-1800.6	1797.7	1797.6
4189	-2.4011	-2.9370	-1720.1	1717.7	1717.5
4190	-1.5356	-2.9354	-1635.2	1633.6	1632.9
4191	-0.47761	-2.9336	-1545.6	1545.1	1543.9
4192	0.82300	-2.9318	-1451.4	1452.3	1450.4
4193	2.4327	-2.9299	-1352.6	1355.0	1352.3
4194	4.4412	-2.9279	-1249.0	1253.4	1249.8
4195	6.9730	-2.9258	-1140.7	1147.7	1142.8
4196	10.205	-2.9236	-1027.7	1038.0	1031.4
4197	14.401	-2.9213	-910.22	924.62	916.09
4198	19.972	-2.9189	-788.42	808.39	797.19
4199	27.611	-2.9164	-662.87	690.48	675.74
4200	38.589	-2.9137	-534.71	573.30	553.72
4201	55.477	-2.9110	-406.38	461.86	435.61
4202	83.913	-2.9082	-283.41	367.32	332.52
4203	135.52	-2.9052	-177.40	312.92	271.59
4204	224.32	-2.9022	-102.53	326.84	290.15
4205	349.41	-2.8990	-58.332	407.74	383.05
4206	497.38	-2.8957	-32.372	529.76	515.65
4207	657.64	-2.8924	-15.841	673.48	667.10
4208	823.45	-2.8888	-4.9223	828.37	827.36
4209	989.08	1.9390	-2.8860	991.97	989.56
4210	1148.3	5.7433	-2.8828	1151.1	1146.9
4211	1294.4	7.6020	-2.8800	1297.3	1292.1
4212	1217.7	45.448	-2.8813	1220.5	1197.1
4213	1069.8	45.491	-2.8841	1072.7	1049.4
4214	908.66	42.673	-2.8872	911.55	889.64
4215	742.39	35.533	-2.8904	745.28	726.83
4216	577.56	24.071	-2.8937	580.45	567.45
4217	419.04	8.1152	-2.8969	421.93	416.54
4218	272.60	-2.8997	-15.361	287.96	281.94

1

```
***** ANSYS - ENGINEERING ANALYSIS SYSTEM  RELEASE 5.7.1   *****
ANSYS/Mechanical U
00251976          VERSION=INTEL NT      11:31:48  DEC 23, 2005 CP=   1165.609

 Point Beach Strainer Inner Rim Plate Analysis


 ***** POST1 NODAL STRESS LISTING *****

 LOAD STEP=     4  SUBSTEP=    15
  TIME=    4.0000      LOAD CASE=   0
 SHELL NODAL RESULTS ARE AT BOTTOM
```

NODE	S1	S2	S3	SINT	SEQV
4219	151.43	-2.9028	-58.216	209.64	188.19
4220	77.020	-2.9057	-141.45	218.47	191.46
4221	42.510	-2.9085	-258.11	300.62	280.68
4222	24.851	-2.9112	-385.24	410.09	396.94
4223	13.923	-2.9137	-512.88	526.80	518.59
4224	6.3080	-2.9162	-637.82	644.13	639.56
4225	0.63788	-2.9186	-758.87	759.51	757.73
4226	-2.9207	-3.7515	-875.56	872.64	872.22
4227	-2.9230	-7.2351	-987.68	984.76	982.61
4228	-2.9250	-10.049	-1095.2	1092.2	1088.7
4229	-2.9270	-12.353	-1198.0	1195.1	1190.4
4230	-2.9289	-14.260	-1296.2	1293.3	1287.7
4231	-2.9307	-15.854	-1389.8	1386.9	1380.5
4232	-2.9324	-17.198	-1479.0	1476.0	1469.0
4233	-2.9340	-18.339	-1563.7	1560.7	1553.1
4234	-2.9356	-19.313	-1644.0	1641.1	1632.9
4235	-2.9370	-20.150	-1720.0	1717.1	1708.6
4236	-2.9384	-20.872	-1791.9	1789.0	1780.1
4237	-2.9397	-21.495	-1859.6	1856.7	1847.5
4238	-2.9409	-22.034	-1923.3	1920.4	1910.9
4239	-2.9421	-22.499	-1983.1	1980.2	1970.5
4240	-2.9431	-22.900	-2039.1	2036.1	2026.2
4241	-2.9441	-23.242	-2091.3	2088.3	2078.2
4242	-2.9451	-23.532	-2139.8	2136.8	2126.6
4243	-2.9459	-23.773	-2184.7	2181.8	2171.5
4244	-2.9467	-23.971	-2226.2	2223.3	2212.8
4245	-2.9474	-24.127	-2264.3	2261.3	2250.8
4246	-2.9481	-24.244	-2299.1	2296.1	2285.5
4247	-2.9487	-24.326	-2330.6	2327.7	2317.0
4248	-2.9493	-24.373	-2359.0	2356.1	2345.4
4249	-2.9497	-24.388	-2384.4	2381.5	2370.8
4250	-2.9502	-24.373	-2406.9	2403.9	2393.3
4251	-2.9505	-24.328	-2426.4	2423.5	2412.9
4252	-2.9509	-24.256	-2443.2	2440.3	2429.7
4253	-2.9511	-24.157	-2457.3	2454.4	2443.8
4254	-2.9513	-24.033	-2468.8	2465.8	2455.4
4255	-2.9515	-23.885	-2477.8	2474.8	2464.4
4256	-2.9516	-23.715	-2484.3	2481.3	2471.0

1

```
***** ANSYS - ENGINEERING ANALYSIS SYSTEM  RELEASE 5.7.1   *****
ANSYS/Mechanical U
00251976          VERSION=INTEL NT      11:31:48  DEC 23, 2005 CP=   1165.625

 Point Beach Strainer Inner Rim Plate Analysis


 ***** POST1 NODAL STRESS LISTING *****

 LOAD STEP=     4  SUBSTEP=    15
  TIME=    4.0000      LOAD CASE=   0
 SHELL NODAL RESULTS ARE AT BOTTOM
```

NODE	S1	S2	S3	SINT	SEQV
4257	-2.9517	-23.523	-2488.4	2485.5	2475.2
4258	-2.9518	-23.311	-2490.3	2487.3	2477.2
4259	-2.9517	-23.080	-2490.0	2487.0	2477.0
4260	-2.9517	-22.831	-2487.5	2484.5	2474.7
4261	-2.9516	-22.565	-2483.0	2480.0	2470.3
4262	-2.9515	-22.282	-2476.5	2473.6	2464.0
4263	-2.9513	-21.985	-2468.2	2465.2	2455.7
4264	-2.9511	-21.673	-2458.0	2455.0	2445.7
4265	-2.9509	-21.348	-2446.0	2443.1	2433.9
4266	-2.9507	-21.011	-2432.4	2429.5	2420.5
4267	-2.9504	-20.663	-2417.2	2414.3	2405.4
4268	-2.9500	-20.303	-2400.5	2397.5	2388.9
4269	-2.9497	-19.935	-2382.2	2379.3	2370.8
4270	-2.9493	-19.557	-2362.6	2359.7	2351.4
4271	-2.9489	-19.171	-2341.6	2338.7	2330.6
4272	-2.9485	-18.777	-2319.4	2316.5	2308.6
4273	-2.9481	-18.377	-2296.0	2293.0	2285.3
4274	-2.9476	-17.971	-2271.4	2268.4	2260.9
4275	-2.9471	-17.559	-2245.7	2242.7	2235.4
4276	-2.9466	-17.143	-2218.9	2216.0	2208.9
4277	-2.9461	-16.722	-2191.2	2188.3	2181.4
4278	-2.9455	-16.299	-2162.6	2159.7	2153.0
4279	-2.9450	-15.872	-2133.1	2130.2	2123.7
4280	-2.9444	-15.442	-2102.8	2099.9	2093.6
4281	-2.9438	-15.011	-2071.7	2068.8	2062.8
4282	-2.9432	-14.578	-2039.9	2037.0	2031.2
4283	-2.9426	-14.145	-2007.5	2004.5	1998.9
4284	-2.9419	-13.711	-1974.4	1971.4	1966.1
4285	-2.9413	-13.277	-1940.7	1937.7	1932.6
4286	-2.9406	-12.843	-1906.4	1903.5	1898.6
4287	-2.9400	-12.410	-1871.7	1868.8	1864.1
4288	-2.9393	-11.978	-1836.5	1833.6	1829.1
4289	-2.9386	-11.548	-1800.9	1798.0	1793.7
4290	-2.9379	-11.119	-1764.9	1762.0	1757.9
4291	-2.9372	-10.693	-1728.5	1725.6	1721.7
4292	-2.9365	-10.269	-1691.8	1688.9	1685.2
4293	-2.9358	-9.8468	-1654.8	1651.9	1648.5
4294	-2.9351	-9.4277	-1617.6	1614.6	1611.4

1

```
***** ANSYS - ENGINEERING ANALYSIS SYSTEM  RELEASE 5.7.1   *****
ANSYS/Mechanical U
00251976          VERSION=INTEL NT      11:31:48  DEC 23, 2005 CP=   1165.625

 Point Beach Strainer Inner Rim Plate Analysis


 ***** POST1 NODAL STRESS LISTING *****

 LOAD STEP=     4  SUBSTEP=    15
  TIME=    4.0000      LOAD CASE=   0
 SHELL NODAL RESULTS ARE AT BOTTOM
```

NODE	S1	S2	S3	SINT	SEQV
4295	-2.9344	-9.0114	-1580.1	1577.1	1574.1
4296	-2.9337	-8.5979	-1542.3	1539.4	1536.6
4297	-2.9330	-8.1874	-1504.4	1501.5	1498.9
4298	-2.9322	-7.7797	-1466.3	1463.4	1461.0
4299	-2.9315	-7.3749	-1428.1	1425.1	1422.9
4300	-2.9308	-6.9726	-1389.7	1386.7	1384.7
4301	-2.9301	-6.5726	-1351.1	1348.2	1346.4
4302	-2.9293	-6.1746	-1312.5	1309.6	1307.9
4303	-2.9286	-5.7780	-1273.8	1270.8	1269.4
4304	-2.9278	-5.3823	-1234.9	1232.0	1230.8
4305	-2.9271	-4.9865	-1196.0	1193.1	1192.1
4306	1217.3	131.29	-2.8812	1220.2	1158.9
4307	1053.8	130.30	-2.8843	1056.7	996.82
4308	875.56	118.31	-2.8877	878.45	824.56
4309	699.29	98.812	-2.8911	702.18	657.25
4310	530.52	76.527	-2.8943	533.42	498.48
4311	370.43	53.763	-2.8975	373.33	348.47
4312	221.38	28.679	-2.9005	224.28	210.28
4313	99.186	-2.9029	-14.867	114.05	108.57
4314	42.266	-2.9060	-115.79	158.05	141.00
4315	20.588	-2.9087	-244.51	265.10	254.16
4316	7.4464	-2.9113	-374.75	382.19	377.12
4317	-2.2879	-2.9140	-501.75	499.46	499.15
4318	-2.9161	-10.030	-624.43	621.52	617.99
4319	-2.9184	-16.392	-742.48	739.56	732.92
4320	-2.9206	-21.722	-855.80	852.88	843.63
4321	-2.9226	-26.250	-964.39	961.46	950.02
4322	-2.9246	-30.139	-1068.3	1065.4	1052.0
4323	-2.9265	-33.513	-1167.5	1164.6	1149.6
4324	-2.9283	-36.463	-1262.2	1259.3	1242.9
4325	-2.9301	-39.065	-1352.5	1349.5	1331.8
4326	-2.9317	-41.372	-1438.3	1435.3	1416.5
4327	-2.9333	-43.431	-1519.8	1516.8	1497.0
4328	-2.9347	-45.276	-1597.0	1594.1	1573.3
4329	-2.9361	-46.934	-1670.1	1667.2	1645.6
4330	-2.9374	-48.427	-1739.2	1736.2	1713.9
4331	-2.9387	-49.774	-1804.2	1801.3	1778.3
4332	-2.9398	-50.987	-1865.4	1862.5	1838.9

1

```
***** ANSYS - ENGINEERING ANALYSIS SYSTEM  RELEASE 5.7.1   *****
ANSYS/Mechanical U
00251976          VERSION=INTEL NT      11:31:48  DEC 23, 2005 CP=   1165.625

 Point Beach Strainer Inner Rim Plate Analysis


 ***** POST1 NODAL STRESS LISTING *****

 LOAD STEP=     4  SUBSTEP=    15
  TIME=    4.0000      LOAD CASE=   0
 SHELL NODAL RESULTS ARE AT BOTTOM
```

NODE	S1	S2	S3	SINT	SEQV
4333	-2.9409	-52.079	-1922.8	1919.9	1895.8
4334	-2.9420	-53.058	-1976.6	1973.6	1949.0
4335	-2.9429	-53.932	-2026.6	2023.7	1998.7
4336	-2.9438	-54.707	-2073.2	2070.3	2044.9
4337	-2.9446	-55.388	-2116.3	2113.4	2087.7
4338	-2.9454	-55.981	-2156.1	2153.2	2127.2
4339	-2.9461	-56.489	-2192.6	2189.7	2163.4
4340	-2.9467	-56.916	-2226.0	2223.0	2196.6
4341	-2.9473	-57.265	-2256.3	2253.3	2226.6
4342	-2.9478	-57.539	-2283.5	2280.6	2253.8
4343	-2.9483	-57.741	-2307.8	2304.9	2278.0
4344	-2.9487	-57.873	-2329.3	2326.4	2299.4
4345	-2.9490	-57.939	-2348.1	2345.1	2318.1
4346	-2.9494	-57.940	-2364.2	2361.2	2334.2
4347	-2.9496	-57.879	-2377.7	2374.7	2347.7
4348	-2.9498	-57.759	-2388.7	2385.7	2358.8
4349	-2.9500	-57.581	-2397.2	2394.3	2367.5
4350	-2.9501	-57.348	-2403.5	2400.5	2373.8
4351	-2.9502	-57.063	-2407.4	2404.5	2377.9
4352	-2.9502	-56.727	-2409.2	2406.3	2379.8
4353	-2.9502	-56.342	-2408.9	2405.9	2379.7
4354	-2.9502	-55.912	-2406.5	2403.5	2377.5
4355	-2.9501	-55.437	-2402.2	2399.2	2373.4
4356	-2.9500	-54.921	-2395.9	2393.0	2367.4
4357	-2.9498	-54.364	-2387.9	2384.9	2359.7
4358	-2.9496	-53.770	-2378.1	2375.1	2350.2
4359	-2.9494	-53.139	-2366.6	2363.7	2339.0
4360	-2.9492	-52.474	-2353.6	2350.6	2326.2
4361	-2.9489	-51.777	-2339.0	2336.0	2312.0
4362	-2.9486	-51.050	-2322.9	2319.9	2296.3
4363	-2.9482	-50.295	-2305.4	2302.4	2279.1
4364	-2.9479	-49.512	-2286.5	2283.6	2260.7
4365	-2.9475	-48.704	-2266.4	2263.5	2241.0
4366	-2.9471	-47.873	-2245.1	2242.1	2220.0
4367	-2.9467	-47.021	-2222.6	2219.7	2197.9
4368	-2.9462	-46.148	-2199.0	2196.1	2174.8
4369	-2.9457	-45.256	-2174.4	2171.4	2150.6
4370	-2.9453	-44.348	-2148.7	2145.8	2125.4

1

```
***** ANSYS - ENGINEERING ANALYSIS SYSTEM  RELEASE 5.7.1   *****
ANSYS/Mechanical U
00251976          VERSION=INTEL NT      11:31:48  DEC 23, 2005 CP=   1165.625

 Point Beach Strainer Inner Rim Plate Analysis


 ***** POST1 NODAL STRESS LISTING *****

 LOAD STEP=     4  SUBSTEP=    15
  TIME=    4.0000      LOAD CASE=   0
 SHELL NODAL RESULTS ARE AT BOTTOM
```

NODE	S1	S2	S3	SINT	SEQV
4371	-2.9447	-43.424	-2122.1	2119.2	2099.3
4372	-2.9442	-42.485	-2094.7	2091.7	2072.3
4373	-2.9437	-41.534	-2066.4	2063.5	2044.4
4374	-2.9431	-40.571	-2037.3	2034.4	2015.8
4375	-2.9426	-39.598	-2007.5	2004.6	1986.5
4376	-2.9420	-38.616	-1977.0	1974.1	1956.5
4377	-2.9414	-37.627	-1945.9	1942.9	1925.8
4378	-2.9408	-36.630	-1914.1	1911.2	1894.6
4379	-2.9402	-35.628	-1881.8	1878.9	1862.8
4380	-2.9395	-34.622	-1849.0	1846.1	1830.4
4381	-2.9389	-33.612	-1815.7	1812.8	1797.6
4382	-2.9383	-32.599	-1782.0	1779.0	1764.4
4383	-2.9376	-31.585	-1747.8	1744.9	1730.7
4384	-2.9370	-30.570	-1713.3	1710.3	1696.7
4385	-2.9363	-29.556	-1678.4	1675.5	1662.3
4386	-2.9356	-28.542	-1643.2	1640.3	1627.6
4387	-2.9349	-27.529	-1607.8	1604.8	1592.7
4388	-2.9343	-26.519	-1572.0	1569.1	1557.4
4389	-2.9336	-25.511	-1536.1	1533.1	1522.0
4390	-2.9329	-24.506	-1499.9	1496.9	1486.3
4391	-2.9322	-23.505	-1463.5	1460.6	1450.4
4392	-2.9315	-22.508	-1427.0	1424.1	1414.4
4393	-2.9308	-21.515	-1390.3	1387.4	1378.2
4394	-2.9301	-20.525	-1353.5	1350.6	1341.8
4395	-2.9294	-19.540	-1316.5	1313.6	1305.4
4396	-2.9287	-18.559	-1279.5	1276.6	1268.8
4397	-2.9280	-17.580	-1242.4	1239.4	1232.2
4398	-2.9273	-16.605	-1205.1	1202.2	1195.4
4399	-2.9266	-15.631	-1167.8	1164.9	1158.6
4400	1303.2	297.74	-2.8796	1306.1	1184.7
4401	1063.0	260.48	-2.8841	1065.9	961.64
4402	856.36	204.66	-2.8880	859.25	776.56
4403	673.46	155.96	-2.8915	676.35	612.58
4404	504.29	117.16	-2.8948	507.19	459.09
4405	344.33	85.738	-2.8978	347.23	312.48
4406	192.79	58.532	-2.9008	195.69	173.34
4407	66.320	16.764	-2.9039	69.224	61.785
4408	30.547	-2.9062	-106.54	137.08	123.79

1

```
***** ANSYS - ENGINEERING ANALYSIS SYSTEM  RELEASE 5.7.1   *****
ANSYS/Mechanical U
00251976          VERSION=INTEL NT      11:31:48  DEC 23, 2005 CP=   1165.625

 Point Beach Strainer Inner Rim Plate Analysis


 ***** POST1 NODAL STRESS LISTING *****

 LOAD STEP=     4  SUBSTEP=    15
  TIME=    4.0000      LOAD CASE=   0
 SHELL NODAL RESULTS ARE AT BOTTOM
```

NODE	S1	S2	S3	SINT	SEQV
4409	14.238	-2.9088	-241.08	255.32	247.19
4410	1.5979	-2.9114	-371.78	373.37	371.14
4411	-2.9138	-8.8597	-497.69	494.78	491.83
4412	-2.9161	-17.709	-618.69	615.78	608.51
4413	-2.9183	-25.301	-734.79	731.87	720.94
4414	-2.9204	-31.887	-846.05	843.12	829.02
4415	-2.9225	-37.654	-952.53	949.60	932.72
4416	-2.9244	-42.746	-1054.3	1051.4	1032.1
4417	-2.9263	-47.278	-1151.5	1148.6	1127.1
4418	-2.9280	-51.338	-1244.2	1241.2	1217.8
4419	-2.9297	-54.996	-1332.4	1329.5	1304.2
4420	-2.9313	-58.308	-1416.3	1413.4	1386.5
4421	-2.9328	-61.318	-1496.0	1493.0	1464.7
4422	-2.9343	-64.061	-1571.5	1568.5	1538.9
4423	-2.9356	-66.565	-1642.9	1639.9	1609.1
4424	-2.9369	-68.854	-1710.3	1707.4	1675.4
4425	-2.9381	-70.946	-1773.9	1770.9	1737.9
4426	-2.9393	-72.855	-1833.6	1830.7	1796.8
4427	-2.9403	-74.595	-1889.7	1886.8	1852.0
4428	-2.9413	-76.174	-1942.1	1939.2	1903.6
4429	-2.9422	-77.603	-1991.0	1988.1	1951.8
4430	-2.9431	-78.889	-2036.5	2033.5	1996.7
4431	-2.9439	-80.038	-2078.6	2075.6	2038.2
4432	-2.9447	-81.056	-2117.4	2114.5	2076.5
4433	-2.9453	-81.947	-2153.0	2150.1	2111.7
4434	-2.9460	-82.718	-2185.6	2182.6	2143.8
4435	-2.9465	-83.371	-2215.1	2212.1	2173.0
4436	-2.9470	-83.912	-2241.7	2238.7	2199.4
4437	-2.9475	-84.344	-2265.4	2262.5	2222.9
4438	-2.9479	-84.671	-2286.4	2283.4	2243.7
4439	-2.9482	-84.897	-2304.7	2301.7	2261.8
4440	-2.9485	-85.025	-2320.3	2317.4	2277.5
4441	-2.9488	-85.058	-2333.5	2330.5	2290.6
4442	-2.9490	-85.001	-2344.2	2341.2	2301.3
4443	-2.9491	-84.856	-2352.5	2349.6	2309.7
4444	-2.9492	-84.626	-2358.6	2355.6	2315.9
4445	-2.9493	-84.315	-2362.4	2359.5	2319.9
4446	-2.9494	-83.927	-2364.1	2361.2	2321.8

1

```
***** ANSYS - ENGINEERING ANALYSIS SYSTEM  RELEASE 5.7.1   *****
ANSYS/Mechanical U
00251976          VERSION=INTEL NT      11:31:48  DEC 23, 2005 CP=   1165.625

 Point Beach Strainer Inner Rim Plate Analysis


 ***** POST1 NODAL STRESS LISTING *****

 LOAD STEP=     4  SUBSTEP=    15
  TIME=    4.0000      LOAD CASE=   0
 SHELL NODAL RESULTS ARE AT BOTTOM
```

NODE	S1	S2	S3	SINT	SEQV
4447	-2.9493	-83.464	-2363.8	2360.8	2321.6
4448	-2.9493	-82.929	-2361.4	2358.5	2319.5
4449	-2.9492	-82.326	-2357.2	2354.2	2315.6
4450	-2.9491	-81.657	-2351.1	2348.1	2309.8
4451	-2.9490	-80.925	-2343.2	2340.3	2302.3
4452	-2.9488	-80.134	-2333.6	2330.7	2293.1
4453	-2.9486	-79.287	-2322.4	2319.5	2282.3
4454	-2.9483	-78.385	-2309.7	2306.7	2269.9
4455	-2.9480	-77.432	-2295.4	2292.4	2256.1
4456	-2.9477	-76.430	-2279.7	2276.7	2240.9
4457	-2.9474	-75.383	-2262.6	2259.6	2224.3
4458	-2.9471	-74.293	-2244.2	2241.2	2206.4
4459	-2.9467	-73.162	-2224.5	2221.6	2187.3
4460	-2.9463	-71.992	-2203.7	2200.8	2167.1
4461	-2.9459	-70.787	-2181.7	2178.8	2145.7
4462	-2.9454	-69.549	-2158.7	2155.7	2123.2
4463	-2.9450	-68.280	-2134.6	2131.7	2099.8
4464	-2.9445	-66.981	-2109.6	2106.6	2075.4
4465	-2.9440	-65.656	-2083.6	2080.7	2050.0
4466	-2.9435	-64.307	-2056.8	2053.9	2023.9
4467	-2.9430	-62.935	-2029.2	2026.3	1996.9
4468	-2.9424	-61.542	-2000.8	1997.9	1969.2
4469	-2.9419	-60.131	-1971.7	1968.8	1940.8
4470	-2.9413	-58.704	-1941.9	1939.0	1911.7
4471	-2.9407	-57.261	-1911.5	1908.6	1882.0
4472	-2.9401	-55.806	-1880.5	1877.6	1851.7
4473	-2.9395	-54.339	-1849.0	1846.1	1820.9
4474	-2.9389	-52.862	-1817.0	1814.0	1789.6
4475	-2.9383	-51.376	-1784.5	1781.5	1757.8
4476	-2.9377	-49.884	-1751.5	1748.6	1725.6
4477	-2.9371	-48.387	-1718.2	1715.3	1693.0
4478	-2.9364	-46.885	-1684.5	1681.6	1660.0
4479	-2.9358	-45.380	-1650.4	1647.5	1626.7
4480	-2.9351	-43.874	-1616.1	1613.2	1593.1
4481	-2.9345	-42.367	-1581.5	1578.5	1559.2
4482	-2.9338	-40.860	-1546.6	1543.7	1525.1
4483	-2.9331	-39.355	-1511.5	1508.6	1490.7
4484	-2.9324	-37.851	-1476.2	1473.3	1456.1

1

```
***** ANSYS - ENGINEERING ANALYSIS SYSTEM  RELEASE 5.7.1   *****
ANSYS/Mechanical U
00251976          VERSION=INTEL NT      11:31:48  DEC 23, 2005 CP=   1165.641

 Point Beach Strainer Inner Rim Plate Analysis


 ***** POST1 NODAL STRESS LISTING *****

 LOAD STEP=     4  SUBSTEP=    15
  TIME=    4.0000      LOAD CASE=   0
 SHELL NODAL RESULTS ARE AT BOTTOM
```

NODE	S1	S2	S3	SINT	SEQV
4485	-2.9318	-36.351	-1440.7	1437.8	1421.4
4486	-2.9311	-34.853	-1405.1	1402.1	1386.4
4487	-2.9304	-33.360	-1369.3	1366.3	1351.4
4488	-2.9297	-31.870	-1333.3	1330.4	1316.2
4489	-2.9290	-30.384	-1297.3	1294.3	1280.8
4490	-2.9284	-28.902	-1261.1	1258.2	1245.4
4491	-2.9277	-27.424	-1224.9	1221.9	1209.9
4492	-2.9270	-25.949	-1188.5	1185.6	1174.3
4493	-2.9263	-24.476	-1152.1	1149.2	1138.6
4494	1295.1	496.01	-2.8797	1297.9	1134.0
4495	1042.5	322.88	-2.8845	1045.3	926.47
4496	843.64	234.60	-2.8883	846.53	756.29
4497	664.11	176.08	-2.8917	667.00	597.96
4498	495.91	131.65	-2.8949	498.80	446.99
4499	336.14	96.737	-2.8980	339.04	301.82
4500	183.24	68.967	-2.9009	186.14	162.59
4501	46.721	36.229	-2.9039	49.625	45.300
4502	28.300	-2.9062	-104.92	133.22	120.68
4503	13.105	-2.9089	-240.78	253.89	246.27
4504	0.33917	-2.9114	-371.39	371.73	370.11
4505	-2.9138	-10.513	-496.84	493.92	490.17
4506	-2.9161	-19.841	-617.23	614.32	606.03
4507	-2.9183	-27.939	-732.66	729.74	717.56
4508	-2.9204	-35.036	-843.21	840.29	824.70
4509	-2.9224	-41.309	-948.99	946.06	927.47
4510	-2.9243	-46.898	-1050.1	1047.1	1025.9
4511	-2.9262	-51.910	-1146.6	1143.6	1120.0
4512	-2.9279	-56.432	-1238.6	1235.6	1209.8
4513	-2.9296	-60.533	-1326.1	1323.2	1295.4
4514	-2.9312	-64.266	-1409.4	1406.5	1376.8
4515	-2.9327	-67.675	-1488.5	1485.5	1454.2
4516	-2.9341	-70.795	-1563.4	1560.5	1527.7
4517	-2.9355	-73.654	-1634.3	1631.3	1597.1
4518	-2.9367	-76.275	-1701.2	1698.3	1662.8
4519	-2.9379	-78.677	-1764.3	1761.3	1724.7
4520	-2.9391	-80.875	-1823.6	1820.6	1782.9
4521	-2.9401	-82.883	-1879.2	1876.2	1837.6
4522	-2.9411	-84.711	-1931.2	1928.2	1888.7

1

```
***** ANSYS - ENGINEERING ANALYSIS SYSTEM  RELEASE 5.7.1   *****
ANSYS/Mechanical U
00251976          VERSION=INTEL NT      11:31:48  DEC 23, 2005 CP=   1165.641

 Point Beach Strainer Inner Rim Plate Analysis


 ***** POST1 NODAL STRESS LISTING *****

 LOAD STEP=     4  SUBSTEP=    15
  TIME=    4.0000      LOAD CASE=   0
 SHELL NODAL RESULTS ARE AT BOTTOM
```

NODE	S1	S2	S3	SINT	SEQV
4523	-2.9420	-86.368	-1979.7	1976.8	1936.4
4524	-2.9429	-87.863	-2024.8	2021.8	1980.7
4525	-2.9437	-89.203	-2066.5	2063.6	2021.9
4526	-2.9444	-90.395	-2105.1	2102.1	2059.8
4527	-2.9451	-91.443	-2140.4	2137.5	2094.6
4528	-2.9457	-92.354	-2172.7	2169.7	2126.4
4529	-2.9463	-93.132	-2201.9	2199.0	2155.3
4530	-2.9468	-93.783	-2228.3	2225.4	2181.4
4531	-2.9472	-94.310	-2251.9	2248.9	2204.6
4532	-2.9476	-94.719	-2272.6	2269.7	2225.2
4533	-2.9480	-95.012	-2290.8	2287.8	2243.2
4534	-2.9483	-95.194	-2306.3	2303.4	2258.7
4535	-2.9485	-95.269	-2319.4	2316.4	2271.7
4536	-2.9487	-95.242	-2330.0	2327.0	2282.3
4537	-2.9489	-95.115	-2338.2	2335.3	2290.6
4538	-2.9490	-94.892	-2344.2	2341.3	2296.7
4539	-2.9490	-94.577	-2348.1	2345.1	2300.7
4540	-2.9491	-94.174	-2349.7	2346.8	2302.5
4541	-2.9491	-93.686	-2349.4	2346.4	2302.4
4542	-2.9490	-93.117	-2347.0	2344.1	2300.3
4543	-2.9489	-92.469	-2342.8	2339.9	2296.4
4544	-2.9488	-91.747	-2336.8	2333.8	2290.7
4545	-2.9487	-90.954	-2328.9	2326.0	2283.3
4546	-2.9485	-90.093	-2319.4	2316.5	2274.2
4547	-2.9483	-89.167	-2308.3	2305.4	2263.5
4548	-2.9481	-88.179	-2295.6	2292.7	2251.3
4549	-2.9478	-87.133	-2281.4	2278.5	2237.6
4550	-2.9475	-86.032	-2265.8	2262.9	2222.5
4551	-2.9472	-84.877	-2248.9	2245.9	2206.1
4552	-2.9468	-83.674	-2230.6	2227.7	2188.4
4553	-2.9464	-82.423	-2211.1	2208.2	2169.5
4554	-2.9460	-81.129	-2190.4	2187.5	2149.5
4555	-2.9456	-79.793	-2168.6	2165.7	2128.3
4556	-2.9452	-78.419	-2145.8	2142.8	2106.1
4557	-2.9447	-77.009	-2121.9	2118.9	2082.9
4558	-2.9443	-75.565	-2097.0	2094.1	2058.8
4559	-2.9438	-74.091	-2071.3	2068.4	2033.7
4560	-2.9433	-72.588	-2044.7	2041.8	2007.8

1

```
***** ANSYS - ENGINEERING ANALYSIS SYSTEM  RELEASE 5.7.1   *****
ANSYS/Mechanical U
00251976          VERSION=INTEL NT      11:31:48  DEC 23, 2005 CP=   1165.656

 Point Beach Strainer Inner Rim Plate Analysis


 ***** POST1 NODAL STRESS LISTING *****

 LOAD STEP=     4  SUBSTEP=    15
  TIME=    4.0000      LOAD CASE=   0
 SHELL NODAL RESULTS ARE AT BOTTOM
```

NODE	S1	S2	S3	SINT	SEQV
4561	-2.9428	-71.058	-2017.3	2014.3	1981.2
4562	-2.9422	-69.504	-1989.1	1986.2	1953.7
4563	-2.9417	-67.929	-1960.2	1957.3	1925.6
4564	-2.9411	-66.334	-1930.7	1927.8	1896.9
4565	-2.9405	-64.721	-1900.5	1897.6	1867.5
4566	-2.9399	-63.093	-1869.8	1866.9	1837.5
4567	-2.9393	-61.450	-1838.5	1835.6	1807.0
4568	-2.9387	-59.796	-1806.7	1803.8	1776.0
4569	-2.9381	-58.131	-1774.5	1771.5	1744.6
4570	-2.9375	-56.457	-1741.8	1738.8	1712.7
4571	-2.9369	-54.777	-1708.7	1705.8	1680.4
4572	-2.9362	-53.090	-1675.3	1672.3	1647.8
4573	-2.9356	-51.400	-1641.5	1638.6	1614.9
4574	-2.9349	-49.707	-1607.4	1604.5	1581.6
4575	-2.9343	-48.012	-1573.1	1570.1	1548.1
4576	-2.9336	-46.316	-1538.5	1535.5	1514.3
4577	-2.9330	-44.621	-1503.6	1500.7	1480.3
4578	-2.9323	-42.928	-1468.6	1465.7	1446.1
4579	-2.9316	-41.236	-1433.4	1430.5	1411.7
4580	-2.9310	-39.548	-1398.0	1395.1	1377.2
4581	-2.9303	-37.863	-1362.5	1359.6	1342.5
4582	-2.9296	-36.182	-1326.9	1323.9	1307.6
4583	-2.9289	-34.504	-1291.1	1288.2	1272.7
4584	-2.9282	-32.831	-1255.2	1252.3	1237.6
4585	-2.9276	-31.161	-1219.3	1216.3	1202.5
4586	-2.9269	-29.495	-1183.2	1180.3	1167.2
4587	-2.9262	-27.831	-1147.1	1144.2	1131.9
4588	1304.8	296.61	-2.8795	1307.6	1186.6
4589	1064.6	258.22	-2.8841	1067.5	963.86
4590	857.70	201.57	-2.8880	860.59	778.76
4591	674.48	152.80	-2.8915	677.37	614.50
4592	504.83	114.41	-2.8948	507.73	460.42
4593	344.33	83.692	-2.8978	347.23	313.05
4594	192.09	57.477	-2.9008	194.99	172.89
4595	63.693	17.972	-2.9039	66.597	58.997
4596	29.214	-2.9062	-106.27	135.49	122.62
4597	13.615	-2.9088	-241.20	254.82	246.97
4598	1.4003	-2.9114	-372.04	373.44	371.30

1

```
***** ANSYS - ENGINEERING ANALYSIS SYSTEM  RELEASE 5.7.1   *****
ANSYS/Mechanical U
00251976          VERSION=INTEL NT      11:31:48  DEC 23, 2005 CP=   1165.656

 Point Beach Strainer Inner Rim Plate Analysis


 ***** POST1 NODAL STRESS LISTING *****

 LOAD STEP=     4  SUBSTEP=    15
  TIME=    4.0000      LOAD CASE=   0
 SHELL NODAL RESULTS ARE AT BOTTOM
```

NODE	S1	S2	S3	SINT	SEQV
4599	-2.9138	-8.7756	-498.00	495.09	492.19
4600	-2.9161	-17.442	-619.01	616.09	608.96
4601	-2.9183	-24.925	-735.08	732.17	721.41
4602	-2.9204	-31.456	-846.30	843.38	829.48
4603	-2.9225	-37.208	-952.74	949.82	933.15
4604	-2.9244	-42.315	-1054.5	1051.6	1032.4
4605	-2.9263	-46.879	-1151.6	1148.7	1127.4
4606	-2.9280	-50.983	-1244.3	1241.3	1218.0
4607	-2.9297	-54.692	-1332.5	1329.5	1304.4
4608	-2.9313	-58.056	-1416.4	1413.4	1386.7
4609	-2.9328	-61.116	-1496.0	1493.1	1464.8
4610	-2.9343	-63.907	-1571.5	1568.5	1538.9
4611	-2.9356	-66.455	-1642.9	1639.9	1609.1
4612	-2.9369	-68.781	-1710.3	1707.4	1675.4
4613	-2.9381	-70.905	-1773.9	1770.9	1737.9
4614	-2.9393	-72.842	-1833.6	1830.7	1796.8
4615	-2.9403	-74.603	-1889.7	1886.7	1852.0
4616	-2.9413	-76.200	-1942.1	1939.2	1903.6
4617	-2.9422	-77.642	-1991.0	1988.1	1951.8
4618	-2.9431	-78.937	-2036.5	2033.5	1996.6
4619	-2.9439	-80.092	-2078.6	2075.6	2038.1
4620	-2.9447	-81.113	-2117.4	2114.4	2076.5
4621	-2.9453	-82.006	-2153.0	2150.1	2111.7
4622	-2.9460	-82.775	-2185.6	2182.6	2143.8
4623	-2.9465	-83.427	-2215.1	2212.1	2173.0
4624	-2.9470	-83.965	-2241.7	2238.7	2199.3
4625	-2.9475	-84.393	-2265.4	2262.4	2222.8
4626	-2.9479	-84.716	-2286.4	2283.4	2243.6
4627	-2.9482	-84.937	-2304.6	2301.7	2261.8
4628	-2.9485	-85.061	-2320.3	2317.4	2277.4
4629	-2.9488	-85.090	-2333.5	2330.5	2290.6
4630	-2.9490	-85.028	-2344.2	2341.2	2301.3
4631	-2.9491	-84.879	-2352.5	2349.6	2309.7
4632	-2.9492	-84.646	-2358.6	2355.6	2315.9
4633	-2.9493	-84.332	-2362.4	2359.5	2319.9
4634	-2.9494	-83.940	-2364.1	2361.2	2321.8
4635	-2.9493	-83.474	-2363.8	2360.8	2321.6
4636	-2.9493	-82.937	-2361.5	2358.5	2319.5

1

```
***** ANSYS - ENGINEERING ANALYSIS SYSTEM  RELEASE 5.7.1   *****
ANSYS/Mechanical U
00251976          VERSION=INTEL NT      11:31:48  DEC 23, 2005 CP=   1165.672

 Point Beach Strainer Inner Rim Plate Analysis


 ***** POST1 NODAL STRESS LISTING *****

 LOAD STEP=     4  SUBSTEP=    15
  TIME=    4.0000      LOAD CASE=   0
 SHELL NODAL RESULTS ARE AT BOTTOM
```

NODE	S1	S2	S3	SINT	SEQV
4637	-2.9492	-82.332	-2357.2	2354.2	2315.6
4638	-2.9491	-81.661	-2351.1	2348.1	2309.8
4639	-2.9490	-80.928	-2343.2	2340.3	2302.3
4640	-2.9488	-80.136	-2333.7	2330.7	2293.1
4641	-2.9486	-79.287	-2322.4	2319.5	2282.3
4642	-2.9483	-78.385	-2309.7	2306.7	2269.9
4643	-2.9480	-77.431	-2295.4	2292.4	2256.1
4644	-2.9477	-76.429	-2279.7	2276.7	2240.9
4645	-2.9474	-75.382	-2262.6	2259.6	2224.3
4646	-2.9471	-74.291	-2244.2	2241.2	2206.4
4647	-2.9467	-73.160	-2224.5	2221.6	2187.3
4648	-2.9463	-71.991	-2203.7	2200.8	2167.1
4649	-2.9459	-70.786	-2181.7	2178.8	2145.7
4650	-2.9454	-69.548	-2158.7	2155.7	2123.2
4651	-2.9450	-68.278	-2134.6	2131.7	2099.8
4652	-2.9445	-66.980	-2109.6	2106.6	2075.4
4653	-2.9440	-65.656	-2083.6	2080.7	2050.0
4654	-2.9435	-64.306	-2056.8	2053.9	2023.9
4655	-2.9430	-62.935	-2029.2	2026.3	1996.9
4656	-2.9424	-61.543	-2000.8	1997.9	1969.2
4657	-2.9419	-60.132	-1971.7	1968.8	1940.8
4658	-2.9413	-58.704	-1941.9	1939.0	1911.7
4659	-2.9407	-57.262	-1911.5	1908.6	1882.0
4660	-2.9401	-55.807	-1880.5	1877.6	1851.7
4661	-2.9395	-54.340	-1849.0	1846.1	1820.9
4662	-2.9389	-52.863	-1817.0	1814.0	1789.6
4663	-2.9383	-51.378	-1784.5	1781.5	1757.8
4664	-2.9377	-49.886	-1751.5	1748.6	1725.6
4665	-2.9371	-48.389	-1718.2	1715.3	1693.0
4666	-2.9364	-46.887	-1684.5	1681.6	1660.0
4667	-2.9358	-45.382	-1650.4	1647.5	1626.7
4668	-2.9351	-43.876	-1616.1	1613.2	1593.1
4669	-2.9345	-42.369	-1581.5	1578.5	1559.2
4670	-2.9338	-40.862	-1546.6	1543.7	1525.1
4671	-2.9331	-39.356	-1511.5	1508.6	1490.7
4672	-2.9324	-37.852	-1476.2	1473.3	1456.1
4673	-2.9318	-36.351	-1440.7	1437.8	1421.4
4674	-2.9311	-34.853	-1405.1	1402.1	1386.4

1

```
***** ANSYS - ENGINEERING ANALYSIS SYSTEM  RELEASE 5.7.1   *****
ANSYS/Mechanical U
00251976          VERSION=INTEL NT      11:31:48  DEC 23, 2005 CP=   1165.703

 Point Beach Strainer Inner Rim Plate Analysis


 ***** POST1 NODAL STRESS LISTING *****

 LOAD STEP=     4  SUBSTEP=    15
  TIME=    4.0000      LOAD CASE=   0
 SHELL NODAL RESULTS ARE AT BOTTOM
```

NODE	S1	S2	S3	SINT	SEQV
4675	-2.9304	-33.359	-1369.3	1366.3	1351.4
4676	-2.9297	-31.869	-1333.3	1330.4	1316.2
4677	-2.9290	-30.382	-1297.3	1294.3	1280.8
4678	-2.9284	-28.901	-1261.1	1258.2	1245.4
4679	-2.9277	-27.422	-1224.9	1221.9	1209.9
4680	-2.9270	-25.948	-1188.5	1185.6	1174.3
4681	-2.9263	-24.475	-1152.1	1149.2	1138.6
4682	1218.9	131.07	-2.8812	1221.8	1160.6
4683	1055.8	125.93	-2.8843	1058.7	1000.6
4684	877.80	112.42	-2.8877	880.69	829.07
4685	700.79	92.904	-2.8910	703.68	661.01
4686	531.05	71.455	-2.8943	533.94	500.92
4687	370.01	49.933	-2.8975	372.90	349.50
4688	220.03	26.349	-2.9005	222.93	209.84
4689	96.725	-2.9030	-15.396	112.12	106.43
4690	40.250	-2.9060	-116.05	156.30	139.81
4691	19.558	-2.9087	-245.09	264.65	254.16
4692	7.1158	-2.9113	-375.45	382.57	377.65
4693	-2.1382	-2.9140	-502.45	500.32	499.93
4694	-2.9161	-9.5634	-625.08	622.16	618.87
4695	-2.9184	-15.733	-743.04	740.12	733.80
4696	-2.9206	-20.965	-856.26	853.34	844.46
4697	-2.9226	-25.465	-964.75	961.83	950.76
4698	-2.9246	-29.375	-1068.6	1065.6	1052.7
4699	-2.9265	-32.804	-1167.7	1164.8	1150.2
4700	-2.9283	-35.830	-1262.4	1259.4	1243.3
4701	-2.9301	-38.517	-1352.5	1349.6	1332.2
4702	-2.9317	-40.915	-1438.3	1435.4	1416.8
4703	-2.9333	-43.062	-1519.7	1516.8	1497.2
4704	-2.9347	-44.990	-1597.0	1594.0	1573.4
4705	-2.9361	-46.724	-1670.1	1667.1	1645.7
4706	-2.9374	-48.284	-1739.1	1736.2	1713.9
4707	-2.9387	-49.688	-1804.2	1801.2	1778.3
4708	-2.9398	-50.950	-1865.4	1862.4	1838.9
4709	-2.9409	-52.081	-1922.8	1919.8	1895.8
4710	-2.9420	-53.091	-1976.5	1973.6	1949.0
4711	-2.9429	-53.988	-2026.6	2023.6	1998.6
4712	-2.9438	-54.781	-2073.2	2070.2	2044.8

1

```
***** ANSYS - ENGINEERING ANALYSIS SYSTEM  RELEASE 5.7.1  *****
ANSYS/Mechanical U
00251976          VERSION=INTEL NT      11:31:48  DEC 23, 2005 CP=   1165.719

 Point Beach Strainer Inner Rim Plate Analysis


 ***** POST1 NODAL STRESS LISTING *****

 LOAD STEP=     4  SUBSTEP=    15
  TIME=    4.0000      LOAD CASE=   0
 SHELL NODAL RESULTS ARE AT BOTTOM
```

NODE	S1	S2	S3	SINT	SEQV
4713	-2.9446	-55.474	-2116.3	2113.4	2087.6
4714	-2.9454	-56.074	-2156.1	2153.1	2127.1
4715	-2.9461	-56.585	-2192.6	2189.7	2163.3
4716	-2.9467	-57.011	-2226.0	2223.0	2196.5
4717	-2.9473	-57.358	-2256.2	2253.3	2226.6
4718	-2.9478	-57.627	-2283.5	2280.5	2253.7
4719	-2.9483	-57.823	-2307.8	2304.9	2277.9
4720	-2.9487	-57.949	-2329.3	2326.4	2299.4
4721	-2.9490	-58.007	-2348.1	2345.1	2318.1
4722	-2.9494	-58.001	-2364.2	2361.2	2334.2
4723	-2.9496	-57.933	-2377.7	2374.7	2347.7
4724	-2.9498	-57.805	-2388.7	2385.7	2358.8
4725	-2.9500	-57.621	-2397.3	2394.3	2367.4
4726	-2.9501	-57.382	-2403.5	2400.5	2373.8
4727	-2.9502	-57.091	-2407.4	2404.5	2377.9
4728	-2.9502	-56.750	-2409.2	2406.3	2379.8
4729	-2.9502	-56.361	-2408.9	2405.9	2379.7
4730	-2.9502	-55.926	-2406.5	2403.5	2377.5
4731	-2.9501	-55.448	-2402.2	2399.2	2373.4
4732	-2.9500	-54.928	-2395.9	2393.0	2367.4
4733	-2.9498	-54.369	-2387.9	2384.9	2359.7
4734	-2.9496	-53.773	-2378.1	2375.2	2350.2
4735	-2.9494	-53.140	-2366.6	2363.7	2339.0
4736	-2.9492	-52.474	-2353.6	2350.6	2326.3
4737	-2.9489	-51.777	-2339.0	2336.0	2312.0
4738	-2.9486	-51.049	-2322.9	2319.9	2296.3
4739	-2.9482	-50.292	-2305.4	2302.4	2279.1
4740	-2.9479	-49.510	-2286.5	2283.6	2260.7
4741	-2.9475	-48.702	-2266.4	2263.5	2241.0
4742	-2.9471	-47.871	-2245.1	2242.1	2220.0
4743	-2.9467	-47.018	-2222.6	2219.7	2197.9
4744	-2.9462	-46.146	-2199.0	2196.1	2174.8
4745	-2.9457	-45.255	-2174.4	2171.4	2150.6
4746	-2.9453	-44.346	-2148.7	2145.8	2125.4
4747	-2.9447	-43.423	-2122.1	2119.2	2099.3
4748	-2.9442	-42.485	-2094.7	2091.7	2072.3
4749	-2.9437	-41.534	-2066.4	2063.5	2044.4
4750	-2.9431	-40.572	-2037.3	2034.4	2015.8

1

```
***** ANSYS - ENGINEERING ANALYSIS SYSTEM  RELEASE 5.7.1   *****
ANSYS/Mechanical U
00251976          VERSION=INTEL NT      11:31:48  DEC 23, 2005 CP=   1165.750

 Point Beach Strainer Inner Rim Plate Analysis


 ***** POST1 NODAL STRESS LISTING *****

 LOAD STEP=     4  SUBSTEP=    15
  TIME=    4.0000      LOAD CASE=   0
 SHELL NODAL RESULTS ARE AT BOTTOM
```

NODE	S1	S2	S3	SINT	SEQV
4751	-2.9426	-39.599	-2007.5	2004.6	1986.5
4752	-2.9420	-38.617	-1977.0	1974.1	1956.5
4753	-2.9414	-37.628	-1945.9	1942.9	1925.8
4754	-2.9408	-36.632	-1914.1	1911.2	1894.6
4755	-2.9402	-35.630	-1881.8	1878.9	1862.8
4756	-2.9395	-34.624	-1849.0	1846.1	1830.4
4757	-2.9389	-33.614	-1815.7	1812.8	1797.6
4758	-2.9383	-32.602	-1782.0	1779.0	1764.4
4759	-2.9376	-31.588	-1747.8	1744.9	1730.7
4760	-2.9370	-30.573	-1713.3	1710.3	1696.7
4761	-2.9363	-29.558	-1678.4	1675.5	1662.3
4762	-2.9356	-28.544	-1643.2	1640.3	1627.6
4763	-2.9349	-27.531	-1607.7	1604.8	1592.7
4764	-2.9343	-26.520	-1572.0	1569.1	1557.4
4765	-2.9336	-25.512	-1536.1	1533.1	1522.0
4766	-2.9329	-24.507	-1499.9	1496.9	1486.3
4767	-2.9322	-23.505	-1463.5	1460.6	1450.4
4768	-2.9315	-22.507	-1427.0	1424.1	1414.4
4769	-2.9308	-21.513	-1390.3	1387.4	1378.2
4770	-2.9301	-20.523	-1353.5	1350.6	1341.8
4771	-2.9294	-19.537	-1316.5	1313.6	1305.4
4772	-2.9287	-18.555	-1279.5	1276.6	1268.8
4773	-2.9280	-17.577	-1242.4	1239.4	1232.2
4774	-2.9273	-16.602	-1205.1	1202.2	1195.4
4775	-2.9266	-15.629	-1167.8	1164.9	1158.6
4776	1222.4	41.157	-2.8812	1225.2	1203.8
4777	1075.5	37.491	-2.8840	1078.4	1058.8
4778	911.81	33.791	-2.8871	914.70	896.92
4779	743.18	27.340	-2.8904	746.07	731.43
4780	576.68	17.228	-2.8937	579.58	569.78
4781	417.10	2.8831	-2.8970	419.99	417.13
4782	269.99	-2.8998	-18.932	288.92	281.25
4783	148.50	-2.9028	-60.307	208.81	186.84
4784	74.596	-2.9057	-142.88	217.47	190.91
4785	41.078	-2.9085	-259.45	300.53	281.13
4786	24.257	-2.9112	-386.49	410.74	397.85
4787	13.937	-2.9138	-513.97	527.90	519.68
4788	6.7381	-2.9162	-638.71	645.45	640.67

1

```
***** ANSYS - ENGINEERING ANALYSIS SYSTEM  RELEASE 5.7.1   *****
ANSYS/Mechanical U
00251976          VERSION=INTEL NT      11:31:48  DEC 23, 2005 CP=   1165.750

 Point Beach Strainer Inner Rim Plate Analysis


 ***** POST1 NODAL STRESS LISTING *****

 LOAD STEP=     4  SUBSTEP=    15
  TIME=    4.0000      LOAD CASE=   0
 SHELL NODAL RESULTS ARE AT BOTTOM
```

NODE	S1	S2	S3	SINT	SEQV
4789	1.3325	-2.9186	-759.56	760.89	758.78
4790	-2.9020	-2.9273	-876.06	873.16	873.15
4791	-2.9230	-6.3316	-988.02	985.10	983.40
4792	-2.9250	-9.1481	-1095.4	1092.4	1089.3
4793	-2.9270	-11.499	-1198.1	1195.2	1190.9
4794	-2.9289	-13.481	-1296.2	1293.3	1288.0
4795	-2.9307	-15.167	-1389.8	1386.9	1380.8
4796	-2.9324	-16.609	-1478.9	1475.9	1469.1
4797	-2.9340	-17.849	-1563.5	1560.6	1553.2
4798	-2.9356	-18.920	-1643.8	1640.9	1633.0
4799	-2.9370	-19.846	-1719.9	1716.9	1708.5
4800	-2.9384	-20.647	-1791.7	1788.8	1780.0
4801	-2.9397	-21.340	-1859.5	1856.5	1847.4
4802	-2.9409	-21.939	-1923.2	1920.2	1910.8
4803	-2.9421	-22.454	-1983.0	1980.0	1970.4
4804	-2.9431	-22.895	-2038.9	2036.0	2026.1
4805	-2.9441	-23.270	-2091.1	2088.2	2078.1
4806	-2.9451	-23.584	-2139.7	2136.7	2126.5
4807	-2.9459	-23.843	-2184.7	2181.7	2171.3
4808	-2.9467	-24.052	-2226.1	2223.2	2212.7
4809	-2.9474	-24.216	-2264.2	2261.3	2250.7
4810	-2.9481	-24.337	-2299.0	2296.1	2285.4
4811	-2.9487	-24.418	-2330.6	2327.6	2317.0
4812	-2.9493	-24.463	-2359.0	2356.1	2345.4
4813	-2.9497	-24.474	-2384.4	2381.5	2370.8
4814	-2.9502	-24.453	-2406.8	2403.9	2393.2
4815	-2.9505	-24.402	-2426.4	2423.5	2412.8
4816	-2.9509	-24.322	-2443.2	2440.3	2429.6
4817	-2.9511	-24.216	-2457.3	2454.4	2443.8
4818	-2.9513	-24.085	-2468.8	2465.9	2455.4
4819	-2.9515	-23.931	-2477.8	2474.8	2464.4
4820	-2.9516	-23.754	-2484.3	2481.3	2471.0
4821	-2.9517	-23.556	-2488.4	2485.5	2475.2
4822	-2.9518	-23.339	-2490.3	2487.3	2477.2
4823	-2.9517	-23.103	-2490.0	2487.0	2477.0
4824	-2.9517	-22.849	-2487.5	2484.6	2474.7
4825	-2.9516	-22.578	-2483.0	2480.1	2470.3
4826	-2.9515	-22.293	-2476.5	2473.6	2464.0

1

```
***** ANSYS - ENGINEERING ANALYSIS SYSTEM  RELEASE 5.7.1   *****
ANSYS/Mechanical U
00251976          VERSION=INTEL NT      11:31:48  DEC 23, 2005 CP=   1165.766

 Point Beach Strainer Inner Rim Plate Analysis


 ***** POST1 NODAL STRESS LISTING *****

 LOAD STEP=     4  SUBSTEP=    15
  TIME=    4.0000      LOAD CASE=   0
 SHELL NODAL RESULTS ARE AT BOTTOM
```

NODE	S1	S2	S3	SINT	SEQV
4827	-2.9513	-21.992	-2468.2	2465.2	2455.8
4828	-2.9511	-21.678	-2458.0	2455.0	2445.7
4829	-2.9509	-21.351	-2446.0	2443.1	2433.9
4830	-2.9507	-21.013	-2432.4	2429.5	2420.5
4831	-2.9504	-20.663	-2417.2	2414.3	2405.5
4832	-2.9500	-20.303	-2400.5	2397.5	2388.9
4833	-2.9497	-19.933	-2382.2	2379.3	2370.8
4834	-2.9493	-19.555	-2362.6	2359.7	2351.4
4835	-2.9489	-19.169	-2341.6	2338.7	2330.6
4836	-2.9485	-18.775	-2319.4	2316.5	2308.6
4837	-2.9481	-18.375	-2296.0	2293.0	2285.3
4838	-2.9476	-17.969	-2271.4	2268.4	2260.9
4839	-2.9471	-17.557	-2245.7	2242.7	2235.4
4840	-2.9466	-17.141	-2218.9	2216.0	2208.9
4841	-2.9461	-16.721	-2191.2	2188.3	2181.4
4842	-2.9455	-16.298	-2162.6	2159.7	2153.0
4843	-2.9450	-15.871	-2133.1	2130.2	2123.7
4844	-2.9444	-15.442	-2102.8	2099.9	2093.6
4845	-2.9438	-15.012	-2071.7	2068.8	2062.8
4846	-2.9432	-14.579	-2039.9	2037.0	2031.2
4847	-2.9426	-14.146	-2007.5	2004.5	1998.9
4848	-2.9419	-13.712	-1974.4	1971.4	1966.1
4849	-2.9413	-13.279	-1940.7	1937.7	1932.6
4850	-2.9406	-12.845	-1906.4	1903.5	1898.6
4851	-2.9400	-12.412	-1871.7	1868.8	1864.1
4852	-2.9393	-11.981	-1836.5	1833.6	1829.1
4853	-2.9386	-11.550	-1800.9	1798.0	1793.7
4854	-2.9379	-11.122	-1764.9	1762.0	1757.9
4855	-2.9372	-10.695	-1728.5	1725.6	1721.7
4856	-2.9365	-10.270	-1691.8	1688.9	1685.2
4857	-2.9358	-9.8479	-1654.8	1651.9	1648.5
4858	-2.9351	-9.4281	-1617.6	1614.6	1611.4
4859	-2.9344	-9.0110	-1580.1	1577.1	1574.1
4860	-2.9337	-8.5967	-1542.3	1539.4	1536.6
4861	-2.9330	-8.1852	-1504.4	1501.5	1498.9
4862	-2.9322	-7.7765	-1466.3	1463.4	1461.0
4863	-2.9315	-7.3706	-1428.1	1425.1	1422.9
4864	-2.9308	-6.9674	-1389.7	1386.7	1384.7

1

```
***** ANSYS - ENGINEERING ANALYSIS SYSTEM  RELEASE 5.7.1   *****
ANSYS/Mechanical U
00251976          VERSION=INTEL NT      11:31:48  DEC 23, 2005 CP=   1165.781

 Point Beach Strainer Inner Rim Plate Analysis


 ***** POST1 NODAL STRESS LISTING *****

 LOAD STEP=     4  SUBSTEP=    15
  TIME=    4.0000      LOAD CASE=   0
 SHELL NODAL RESULTS ARE AT BOTTOM
```

NODE	S1	S2	S3	SINT	SEQV
4865	-2.9301	-6.5667	-1351.1	1348.2	1346.4
4866	-2.9293	-6.1683	-1312.5	1309.6	1307.9
4867	-2.9286	-5.7718	-1273.8	1270.8	1269.4
4868	-2.9278	-5.3768	-1234.9	1232.0	1230.8
4869	-2.9271	-4.9825	-1196.0	1193.1	1192.1
4870	1387.6	6.9907	-2.8780	1390.5	1385.6
4871	-2.9344	-3.1630	-1576.5	1573.6	1573.5
4872	-2.9346	-3.2174	-1589.9	1586.9	1586.8
4873	-2.9348	-3.2630	-1601.5	1598.6	1598.4
4874	-2.9350	-3.3001	-1611.5	1608.6	1608.4
4875	-2.9352	-3.3291	-1619.8	1616.8	1616.6
4876	-2.9353	-3.3500	-1626.4	1623.5	1623.3
4877	-2.9354	-3.3632	-1631.4	1628.4	1628.2
4878	-2.9355	-3.3687	-1634.6	1631.7	1631.5
4879	-2.9355	-3.3667	-1636.3	1633.3	1633.1
4880	-2.9355	-3.3574	-1636.2	1633.3	1633.1
4881	-2.9355	-3.3407	-1634.6	1631.6	1631.4
4882	-2.9354	-3.3168	-1631.2	1628.3	1628.1
4883	-2.9353	-3.2857	-1626.3	1623.4	1623.2
4884	-2.9352	-3.2475	-1619.7	1616.8	1616.6
4885	-2.9350	-3.2021	-1611.5	1608.6	1608.5
4886	-2.9348	-3.1495	-1601.7	1598.8	1598.7
4887	-2.9346	-3.0897	-1590.4	1587.4	1587.3
4888	-2.9344	-3.0227	-1577.4	1574.5	1574.4
4889	-2.9342	-2.9484	-1562.9	1559.9	1559.9
4890	-2.8668	-2.9338	-1546.8	1543.9	1543.9
4891	-2.7775	-2.9334	-1529.2	1526.4	1526.4
4892	-2.6807	-2.9331	-1510.1	1507.4	1507.3
4893	-2.5760	-2.9327	-1489.5	1486.9	1486.7
4894	-2.4632	-2.9323	-1467.4	1464.9	1464.7
4895	-2.3422	-2.9318	-1443.8	1441.5	1441.2
4896	-2.2127	-2.9313	-1418.8	1416.6	1416.2
4897	-2.0743	-2.9308	-1392.3	1390.3	1389.8
4898	-1.9266	-2.9303	-1364.5	1362.6	1362.1
4899	-1.7692	-2.9297	-1335.3	1333.5	1332.9
4900	-1.6016	-2.9292	-1304.7	1303.1	1302.4
4901	-1.4231	-2.9286	-1272.7	1271.3	1270.6
4902	-1.2331	-2.9279	-1239.5	1238.3	1237.4

1

```
***** ANSYS - ENGINEERING ANALYSIS SYSTEM  RELEASE 5.7.1   *****
ANSYS/Mechanical U
00251976          VERSION=INTEL NT      11:31:48  DEC 23, 2005 CP=   1165.781

 Point Beach Strainer Inner Rim Plate Analysis


 ***** POST1 NODAL STRESS LISTING *****

 LOAD STEP=     4  SUBSTEP=    15
  TIME=    4.0000      LOAD CASE=   0
 SHELL NODAL RESULTS ARE AT BOTTOM
```

NODE	S1	S2	S3	SINT	SEQV
4903	-1.0307	-2.9273	-1205.0	1203.9	1203.0
4904	-0.81488	-2.9266	-1169.2	1168.4	1167.3
4905	-0.58450	-2.9259	-1132.2	1131.6	1130.4
4906	-0.33813	-2.9251	-1093.9	1093.6	1092.3
4907	-0.74137E-01	-2.9244	-1054.5	1054.4	1053.0
4908	0.20955	-2.9236	-1014.0	1014.2	1012.6
4909	0.51534	-2.9228	-972.29	972.80	971.09
4910	0.84629	-2.9220	-929.52	930.37	928.49
4911	1.2061	-2.9211	-885.71	886.91	884.86
4912	1.5994	-2.9203	-840.87	842.47	840.22
4913	2.0320	-2.9194	-795.05	797.09	794.62
4914	2.5116	-2.9185	-748.30	750.81	748.11
4915	3.0478	-2.9176	-700.64	703.69	700.72
4916	3.6535	-2.9167	-652.12	655.78	652.52
4917	4.3463	-2.9157	-602.81	607.15	603.56
4918	5.1502	-2.9147	-552.74	557.89	553.90
4919	6.0992	-2.9138	-502.00	508.10	503.65
4920	7.2432	-2.9128	-450.66	457.91	452.92
4921	8.6577	-2.9118	-398.85	407.50	401.84
4922	10.462	-2.9107	-346.70	357.16	350.67
4923	12.857	-2.9097	-294.46	307.32	299.74
4924	16.194	-2.9086	-242.52	258.71	249.71
4925	21.145	-2.9076	-191.58	212.73	201.78
4926	29.049	-2.9065	-143.03	172.08	158.53
4927	42.566	-2.9054	-99.549	142.12	125.71
4928	65.804	-2.9043	-65.297	131.10	113.58
4929	101.23	-2.9032	-42.777	144.01	128.79
4930	146.43	-2.9021	-29.607	176.04	164.32
4931	197.40	-2.9010	-21.824	219.23	210.41
4932	251.55	-2.8999	-16.869	268.42	261.71
4933	307.54	-2.8988	-13.448	320.98	315.84
4934	364.67	-2.8976	-10.905	375.58	371.64
4935	422.57	-2.8965	-8.8909	431.46	428.50
4936	481.00	-2.8954	-7.2007	488.20	486.06
4937	539.78	-2.8942	-5.7059	545.49	544.08
4938	598.80	-2.8931	-4.3178	603.12	602.41
4939	657.97	-2.8917	-2.9698	660.94	660.90
4940	717.20	-1.6070	-2.8908	720.09	719.45

1

```
***** ANSYS - ENGINEERING ANALYSIS SYSTEM  RELEASE 5.7.1   *****
ANSYS/Mechanical U
00251976          VERSION=INTEL NT      11:31:48  DEC 23, 2005 CP=   1165.781

 Point Beach Strainer Inner Rim Plate Analysis


 ***** POST1 NODAL STRESS LISTING *****

 LOAD STEP=     4  SUBSTEP=    15
  TIME=    4.0000      LOAD CASE=   0
 SHELL NODAL RESULTS ARE AT BOTTOM
```

NODE	S1	S2	S3	SINT	SEQV
4941	776.42	-0.18179	-2.8897	779.31	777.96
4942	835.57	1.3501	-2.8885	838.46	836.34
4943	894.58	3.0292	-2.8874	897.46	894.52
4944	953.39	4.8881	-2.8862	956.28	952.41
4945	1011.9	6.9448	-2.8851	1014.8	1009.9
4946	1070.1	9.1840	-2.8840	1073.0	1067.0
4947	1127.7	11.532	-2.8829	1130.6	1123.5
4948	1184.5	13.813	-2.8818	1187.3	1179.1
4949	1239.5	15.716	-2.8808	1242.4	1233.2
4950	1291.5	16.791	-2.8798	1294.4	1284.7
4951	1337.9	16.517	-2.8789	1340.8	1331.2
4952	1374.4	14.608	-2.8782	1377.2	1368.6
4953	1394.7	10.961	-2.8778	1397.6	1390.7
4954	1390.6	7.5182	-2.8779	1393.4	1388.3
4955	1386.6	5.2479	-2.8780	1389.5	1385.4
4956	1305.6	41.606	-2.8795	1308.5	1286.8
4957	1299.1	129.16	-2.8796	1301.9	1241.2
4958	1397.8	254.15	-2.8778	1400.7	1291.5
4959	1875.2	837.77	-2.8686	1878.0	1629.4
4960	1398.0	253.69	-2.8778	1400.9	1291.8
4961	1299.3	128.20	-2.8796	1302.2	1241.9
4962	1305.7	40.148	-2.8795	1308.6	1287.6
4963	1397.1	1.8814	-2.8778	1400.0	1397.6
4964	1395.8	5.8719	-2.8778	1398.7	1394.3
4965	1373.7	10.206	-2.8782	1376.6	1370.1
4966	1337.0	13.279	-2.8789	1339.8	1331.8
4967	1290.7	14.566	-2.8798	1293.6	1285.0
4968	1239.0	14.292	-2.8808	1241.8	1233.4
4969	1184.1	12.954	-2.8818	1187.0	1179.1
4970	1127.5	11.044	-2.8829	1130.3	1123.4
4971	1069.9	8.9236	-2.8840	1072.8	1066.9
4972	1011.7	6.8137	-2.8851	1014.6	1009.8
4973	953.18	4.8248	-2.8863	956.07	952.24
4974	894.37	2.9976	-2.8874	897.26	894.33
4975	835.37	1.3314	-2.8885	838.26	836.15
4976	776.23	-0.19622	-2.8897	779.12	777.78
4977	717.03	-1.6201	-2.8908	719.92	719.29
4978	657.83	-2.8918	-2.9819	660.81	660.76

1

```
***** ANSYS - ENGINEERING ANALYSIS SYSTEM  RELEASE 5.7.1   *****
ANSYS/Mechanical U
00251976          VERSION=INTEL NT      11:31:48  DEC 23, 2005 CP=   1165.797

 Point Beach Strainer Inner Rim Plate Analysis


 ***** POST1 NODAL STRESS LISTING *****

 LOAD STEP=     4  SUBSTEP=    15
  TIME=    4.0000      LOAD CASE=   0
 SHELL NODAL RESULTS ARE AT BOTTOM
```

NODE	S1	S2	S3	SINT	SEQV
4979	598.69	-2.8931	-4.3287	603.02	602.30
4980	539.70	-2.8942	-5.7156	545.41	544.01
4981	480.95	-2.8954	-7.2103	488.16	486.02
4982	422.56	-2.8965	-8.9022	431.47	428.50
4983	364.70	-2.8976	-10.921	375.62	371.68
4984	307.60	-2.8988	-13.473	321.07	315.92
4985	251.65	-2.8999	-16.909	268.56	261.84
4986	197.55	-2.9010	-21.884	219.43	210.58
4987	146.62	-2.9021	-29.696	176.32	164.56
4988	101.46	-2.9032	-42.897	144.35	129.09
4989	66.045	-2.9043	-65.428	131.47	113.90
4990	42.785	-2.9054	-99.657	142.44	125.97
4991	29.228	-2.9065	-143.10	172.32	158.72
4992	21.286	-2.9076	-191.62	212.90	201.90
4993	16.307	-2.9086	-242.53	258.84	249.79
4994	12.946	-2.9097	-294.46	307.40	299.79
4995	10.533	-2.9107	-346.69	357.22	350.69
4996	8.7132	-2.9118	-398.83	407.54	401.86
4997	7.2860	-2.9128	-450.64	457.93	452.92
4998	6.1315	-2.9138	-501.98	508.11	503.65
4999	5.1737	-2.9147	-552.72	557.89	553.90
5000	4.3624	-2.9157	-602.79	607.15	603.54
5001	3.6636	-2.9167	-652.11	655.77	652.50
5002	3.0528	-2.9176	-700.62	703.67	700.71
5003	2.5127	-2.9185	-748.28	750.79	748.09
5004	2.0299	-2.9194	-795.04	797.07	794.61
5005	1.5949	-2.9203	-840.86	842.45	840.21
5006	1.1998	-2.9211	-885.70	886.90	884.84
5007	0.83870	-2.9220	-929.51	930.35	928.48
5008	0.50694	-2.9228	-972.28	972.79	971.08
5009	0.20069	-2.9236	-1014.0	1014.2	1012.6
5010	-0.83128E-01	-2.9244	-1054.5	1054.4	1053.0
5011	-0.34702	-2.9251	-1093.9	1093.6	1092.3
5012	-0.59308	-2.9259	-1132.2	1131.6	1130.4
5013	-0.82302	-2.9266	-1169.2	1168.4	1167.3
5014	-1.0383	-2.9273	-1205.0	1203.9	1203.0
5015	-1.2401	-2.9279	-1239.5	1238.3	1237.4
5016	-1.4294	-2.9286	-1272.7	1271.3	1270.6

1

```
***** ANSYS - ENGINEERING ANALYSIS SYSTEM  RELEASE 5.7.1   *****
ANSYS/Mechanical U
00251976          VERSION=INTEL NT      11:31:49  DEC 23, 2005 CP=   1165.797

 Point Beach Strainer Inner Rim Plate Analysis


 ***** POST1 NODAL STRESS LISTING *****

 LOAD STEP=     4  SUBSTEP=    15
  TIME=    4.0000      LOAD CASE=   0
 SHELL NODAL RESULTS ARE AT BOTTOM
```

NODE	S1	S2	S3	SINT	SEQV
5017	-1.6072	-2.9292	-1304.7	1303.1	1302.4
5018	-1.7741	-2.9297	-1335.3	1333.5	1332.9
5019	-1.9308	-2.9303	-1364.5	1362.6	1362.1
5020	-2.0778	-2.9308	-1392.3	1390.3	1389.8
5021	-2.2156	-2.9313	-1418.8	1416.6	1416.2
5022	-2.3446	-2.9318	-1443.8	1441.5	1441.2
5023	-2.4651	-2.9323	-1467.4	1464.9	1464.7
5024	-2.5773	-2.9327	-1489.5	1486.9	1486.7
5025	-2.6816	-2.9331	-1510.1	1507.4	1507.3
5026	-2.7781	-2.9334	-1529.2	1526.4	1526.4
5027	-2.8670	-2.9338	-1546.8	1543.9	1543.9
5028	-2.9342	-2.9484	-1562.9	1560.0	1559.9
5029	-2.9344	-3.0226	-1577.4	1574.5	1574.4
5030	-2.9346	-3.0895	-1590.4	1587.4	1587.3
5031	-2.9348	-3.1493	-1601.7	1598.8	1598.7
5032	-2.9350	-3.2019	-1611.5	1608.6	1608.5
5033	-2.9352	-3.2474	-1619.7	1616.8	1616.6
5034	-2.9353	-3.2859	-1626.3	1623.4	1623.2
5035	-2.9354	-3.3172	-1631.2	1628.3	1628.1
5036	-2.9355	-3.3415	-1634.6	1631.6	1631.4
5037	-2.9355	-3.3585	-1636.2	1633.3	1633.1
5038	-2.9355	-3.3683	-1636.3	1633.3	1633.1
5039	-2.9355	-3.3707	-1634.6	1631.7	1631.5
5040	-2.9354	-3.3656	-1631.4	1628.4	1628.2
5041	-2.9353	-3.3528	-1626.4	1623.5	1623.3
5042	-2.9352	-3.3322	-1619.8	1616.9	1616.7
5043	-2.9350	-3.3033	-1611.5	1608.6	1608.4
5044	-2.9348	-3.2660	-1601.5	1598.6	1598.4
5045	-2.9346	-3.2199	-1589.9	1586.9	1586.8
5046	-2.9344	-3.1646	-1576.5	1573.6	1573.5
5047	-2.9332	-12.322	-1517.6	1514.7	1510.0
5048	-2.9335	-12.455	-1530.2	1527.3	1522.5
5049	-2.9337	-12.567	-1541.2	1538.2	1533.4
5050	-2.9339	-12.660	-1550.5	1547.6	1542.8
5051	-2.9340	-12.734	-1558.4	1555.4	1550.5
5052	-2.9341	-12.789	-1564.6	1561.7	1556.7
5053	-2.9342	-12.825	-1569.3	1566.3	1561.4
5054	-2.9343	-12.842	-1572.3	1569.4	1564.5

1

```
***** ANSYS - ENGINEERING ANALYSIS SYSTEM  RELEASE 5.7.1   *****
ANSYS/Mechanical U
00251976          VERSION=INTEL NT      11:31:49  DEC 23, 2005 CP=   1165.797

 Point Beach Strainer Inner Rim Plate Analysis


 ***** POST1 NODAL STRESS LISTING *****

 LOAD STEP=     4  SUBSTEP=    15
  TIME=    4.0000      LOAD CASE=   0
 SHELL NODAL RESULTS ARE AT BOTTOM
```

NODE	S1	S2	S3	SINT	SEQV
5055	-2.9343	-12.841	-1573.9	1570.9	1566.0
5056	-2.9343	-12.822	-1573.9	1570.9	1566.0
5057	-2.9343	-12.786	-1572.3	1569.3	1564.4
5058	-2.9342	-12.731	-1569.2	1566.2	1561.3
5059	-2.9341	-12.659	-1564.5	1561.6	1556.7
5060	-2.9340	-12.569	-1558.3	1555.4	1550.6
5061	-2.9339	-12.461	-1550.6	1547.7	1542.9
5062	-2.9337	-12.337	-1541.4	1538.5	1533.8
5063	-2.9335	-12.195	-1530.7	1527.8	1523.2
5064	-2.9333	-12.035	-1518.5	1515.6	1511.1
5065	-2.9330	-11.859	-1504.9	1501.9	1497.5
5066	-2.9327	-11.666	-1489.8	1486.8	1482.5
5067	-2.9324	-11.456	-1473.2	1470.3	1466.0
5068	-2.9320	-11.228	-1455.2	1452.3	1448.1
5069	-2.9317	-10.984	-1435.8	1432.9	1428.9
5070	-2.9313	-10.723	-1415.0	1412.1	1408.2
5071	-2.9309	-10.446	-1392.8	1389.9	1386.2
5072	-2.9304	-10.152	-1369.3	1366.4	1362.8
5073	-2.9299	-9.8406	-1344.4	1341.5	1338.0
5074	-2.9294	-9.5128	-1318.2	1315.3	1312.0
5075	-2.9289	-9.1683	-1290.7	1287.8	1284.7
5076	-2.9284	-8.8068	-1261.9	1259.0	1256.1
5077	-2.9278	-8.4284	-1231.9	1228.9	1226.2
5078	-2.9272	-8.0329	-1200.6	1197.7	1195.1
5079	-2.9266	-7.6200	-1168.1	1165.2	1162.8
5080	-2.9259	-7.1894	-1134.4	1131.5	1129.3
5081	-2.9253	-6.7409	-1099.5	1096.6	1094.7
5082	-2.9246	-6.2738	-1063.5	1060.6	1058.9
5083	-2.9239	-5.7877	-1026.4	1023.5	1022.1
5084	-2.9231	-5.2818	-988.21	985.29	984.11
5085	-2.9224	-4.7551	-948.94	946.02	945.11
5086	-2.9216	-4.2063	-908.65	905.73	905.09
5087	-2.9208	-3.6341	-867.35	864.43	864.08
5088	-2.9200	-3.0364	-825.08	822.16	822.11
5089	-2.4109	-2.9192	-781.88	779.46	779.21
5090	-1.7542	-2.9184	-737.76	736.01	735.42
5091	-1.0624	-2.9175	-692.77	691.71	690.78
5092	-0.32982	-2.9166	-646.95	646.62	645.33

1

```
***** ANSYS - ENGINEERING ANALYSIS SYSTEM  RELEASE 5.7.1   *****
ANSYS/Mechanical U
00251976          VERSION=INTEL NT      11:31:49  DEC 23, 2005 CP=   1165.797

 Point Beach Strainer Inner Rim Plate Analysis


 ***** POST1 NODAL STRESS LISTING *****

 LOAD STEP=     4  SUBSTEP=    15
  TIME=    4.0000      LOAD CASE=   0
 SHELL NODAL RESULTS ARE AT BOTTOM
```

NODE	S1	S2	S3	SINT	SEQV
5093	0.45075	-2.9157	-600.33	600.78	599.10
5094	1.2895	-2.9148	-552.95	554.24	552.15
5095	2.2004	-2.9139	-504.86	507.06	504.52
5096	3.2040	-2.9130	-456.12	459.32	456.30
5097	4.3306	-2.9120	-406.78	411.12	407.54
5098	5.6277	-2.9110	-356.94	362.57	358.37
5099	7.1729	-2.9101	-306.69	313.87	308.95
5100	9.1024	-2.9091	-256.22	265.32	259.53
5101	11.675	-2.9081	-205.81	217.49	210.58
5102	15.435	-2.9071	-156.05	171.49	163.09
5103	21.674	-2.9061	-108.26	129.93	119.55
5104	33.660	-2.9050	-65.741	99.401	87.080
5105	57.630	-2.9040	-34.770	92.399	81.294
5106	96.056	-2.9029	-17.851	113.91	107.22
5107	143.27	-2.9019	-9.3537	152.63	149.50
5108	194.46	-2.9008	-4.4908	198.95	198.16
5109	247.55	-1.2341	-2.8999	250.45	249.62
5110	301.70	1.2401	-2.8988	304.60	302.55
5111	356.50	3.3099	-2.8977	359.40	356.34
5112	411.73	5.1750	-2.8966	414.62	410.65
5113	467.23	6.9570	-2.8955	470.12	465.27
5114	522.90	8.7418	-2.8945	525.80	520.08
5115	578.67	10.599	-2.8934	581.57	574.94
5116	634.47	12.593	-2.8923	637.36	629.76
5117	690.23	14.785	-2.8913	693.12	684.45
5118	745.89	17.243	-2.8902	748.78	738.92
5119	801.42	20.033	-2.8891	804.31	793.10
5120	856.77	23.222	-2.8881	859.66	846.90
5121	911.90	26.865	-2.8870	914.79	900.28
5122	966.79	30.989	-2.8859	969.67	953.19
5123	1021.4	35.556	-2.8849	1024.3	1005.6
5124	1075.6	40.393	-2.8839	1078.5	1057.5
5125	1129.3	45.082	-2.8828	1132.2	1109.0
5126	1181.7	48.841	-2.8819	1184.5	1159.6
5127	1231.0	50.521	-2.8809	1233.9	1208.1
5128	1273.6	48.977	-2.8801	1276.5	1251.4
5129	1303.1	44.037	-2.8796	1306.0	1283.2
5130	1310.7	37.703	-2.8794	1313.6	1293.8

1

```
***** ANSYS - ENGINEERING ANALYSIS SYSTEM  RELEASE 5.7.1   *****
ANSYS/Mechanical U
00251976          VERSION=INTEL NT      11:31:49  DEC 23, 2005 CP=   1165.813

 Point Beach Strainer Inner Rim Plate Analysis


 ***** POST1 NODAL STRESS LISTING *****

 LOAD STEP=     4  SUBSTEP=    15
  TIME=    4.0000      LOAD CASE=   0
 SHELL NODAL RESULTS ARE AT BOTTOM
```

NODE	S1	S2	S3	SINT	SEQV
5131	-2.9325	-28.847	-1480.2	1477.3	1464.5
5132	-2.9328	-29.158	-1492.2	1489.3	1476.4
5133	-2.9330	-29.424	-1502.8	1499.8	1486.8
5134	-2.9331	-29.647	-1511.8	1508.8	1495.7
5135	-2.9333	-29.827	-1519.3	1516.3	1503.1
5136	-2.9334	-29.965	-1525.2	1522.3	1509.0
5137	-2.9335	-30.059	-1529.7	1526.8	1513.4
5138	-2.9335	-30.112	-1532.7	1529.7	1516.3
5139	-2.9336	-30.123	-1534.1	1531.2	1517.8
5140	-2.9336	-30.092	-1534.1	1531.2	1517.8
5141	-2.9335	-30.020	-1532.6	1529.7	1516.3
5142	-2.9335	-29.907	-1529.6	1526.7	1513.4
5143	-2.9334	-29.753	-1525.1	1522.2	1509.0
5144	-2.9333	-29.558	-1519.2	1516.3	1503.1
5145	-2.9331	-29.323	-1511.8	1508.9	1495.9
5146	-2.9330	-29.049	-1503.0	1500.1	1487.2
5147	-2.9328	-28.734	-1492.7	1489.8	1477.1
5148	-2.9325	-28.380	-1481.0	1478.1	1465.5
5149	-2.9323	-27.988	-1467.9	1465.0	1452.6
5150	-2.9320	-27.556	-1453.4	1450.5	1438.3
5151	-2.9317	-27.086	-1437.5	1434.6	1422.7
5152	-2.9314	-26.578	-1420.3	1417.4	1405.7
5153	-2.9310	-26.032	-1401.7	1398.7	1387.3
5154	-2.9306	-25.449	-1381.7	1378.8	1367.7
5155	-2.9302	-24.828	-1360.4	1357.5	1346.7
5156	-2.9298	-24.172	-1337.9	1334.9	1324.4
5157	-2.9294	-23.479	-1314.0	1311.1	1300.9
5158	-2.9289	-22.750	-1288.8	1285.9	1276.1
5159	-2.9284	-21.987	-1262.5	1259.5	1250.1
5160	-2.9279	-21.188	-1234.8	1231.9	1222.9
5161	-2.9273	-20.354	-1206.0	1203.1	1194.4
5162	-2.9267	-19.487	-1176.0	1173.0	1164.8
5163	-2.9261	-18.586	-1144.8	1141.9	1134.1
5164	-2.9255	-17.652	-1112.4	1109.5	1102.2
5165	-2.9249	-16.684	-1079.0	1076.1	1069.2
5166	-2.9242	-15.684	-1044.4	1041.5	1035.2
5167	-2.9235	-14.652	-1008.8	1005.9	1000.1
5168	-2.9228	-13.588	-972.13	969.20	963.91

1

```
***** ANSYS - ENGINEERING ANALYSIS SYSTEM  RELEASE 5.7.1   *****
ANSYS/Mechanical U
00251976          VERSION=INTEL NT      11:31:49  DEC 23, 2005 CP=   1165.813

 Point Beach Strainer Inner Rim Plate Analysis


 ***** POST1 NODAL STRESS LISTING *****

 LOAD STEP=     4  SUBSTEP=    15
  TIME=    4.0000      LOAD CASE=   0
 SHELL NODAL RESULTS ARE AT BOTTOM
```

NODE	S1	S2	S3	SINT	SEQV
5169	-2.9221	-12.492	-934.43	931.51	926.76
5170	-2.9214	-11.365	-895.73	892.81	888.62
5171	-2.9206	-10.205	-856.07	853.15	849.53
5172	-2.9199	-9.0139	-815.47	812.55	809.52
5173	-2.9191	-7.7906	-773.96	771.04	768.62
5174	-2.9183	-6.5345	-731.56	728.65	726.84
5175	-2.9174	-5.2449	-688.32	685.40	684.24
5176	-2.9166	-3.9204	-644.25	641.33	640.83
5177	-2.5591	-2.9157	-599.39	596.84	596.66
5178	-1.1582	-2.9149	-553.78	552.63	551.75
5179	0.28626	-2.9140	-507.46	507.74	506.15
5180	1.7804	-2.9131	-460.45	462.23	459.90
5181	3.3332	-2.9122	-412.79	416.13	413.04
5182	4.9584	-2.9112	-364.55	369.51	365.64
5183	6.6785	-2.9103	-315.76	322.44	317.76
5184	8.5318	-2.9094	-266.51	275.04	269.50
5185	10.589	-2.9084	-216.89	227.48	221.04
5186	12.997	-2.9074	-167.09	180.09	172.68
5187	16.110	-2.9065	-117.49	133.60	125.18
5188	21.006	-2.9055	-69.199	90.205	80.943
5189	31.955	-2.9045	-26.523	58.479	50.955
5190	60.573	-1.1067	-2.9039	63.477	62.598
5191	105.37	8.5101	-2.9025	108.27	103.04
5192	155.43	13.216	-2.9015	158.33	150.92
5193	207.25	16.494	-2.9005	210.15	201.15
5194	259.88	19.261	-2.8995	262.78	252.43
5195	312.98	21.844	-2.8984	315.88	304.27
5196	366.39	24.399	-2.8974	369.29	356.43
5197	420.00	27.023	-2.8964	422.90	408.76
5198	473.74	29.795	-2.8954	476.63	461.16
5199	527.54	32.788	-2.8943	530.44	513.53
5200	581.36	36.082	-2.8933	584.25	565.77
5201	635.14	39.770	-2.8923	638.03	617.81
5202	688.84	43.961	-2.8912	691.74	669.54
5203	742.43	48.784	-2.8902	745.32	720.87
5204	795.87	54.389	-2.8892	798.76	771.72
5205	849.14	60.946	-2.8882	852.03	821.97
5206	902.25	68.644	-2.8872	905.14	871.58

1

```
***** ANSYS - ENGINEERING ANALYSIS SYSTEM  RELEASE 5.7.1   *****
ANSYS/Mechanical U
00251976          VERSION=INTEL NT      11:31:49  DEC 23, 2005 CP=   1165.813

 Point Beach Strainer Inner Rim Plate Analysis


 ***** POST1 NODAL STRESS LISTING *****

 LOAD STEP=     4  SUBSTEP=    15
  TIME=    4.0000      LOAD CASE=   0
 SHELL NODAL RESULTS ARE AT BOTTOM
```

NODE	S1	S2	S3	SINT	SEQV
5207	955.24	77.666	-2.8862	958.13	920.50
5208	1008.2	88.166	-2.8852	1011.1	968.80
5209	1061.5	100.18	-2.8841	1064.3	1016.7
5210	1115.4	113.39	-2.8831	1118.3	1064.9
5211	1170.5	126.51	-2.8821	1173.4	1114.3
5212	1226.0	136.35	-2.8810	1228.9	1165.5
5213	1275.7	138.04	-2.8801	1278.6	1214.3
5214	1301.1	128.27	-2.8796	1304.0	1243.6
5215	-2.9321	-41.955	-1459.5	1456.5	1437.4
5216	-2.9324	-42.424	-1471.2	1468.3	1449.0
5217	-2.9326	-42.827	-1481.5	1478.6	1459.0
5218	-2.9327	-43.166	-1490.3	1487.4	1467.6
5219	-2.9329	-43.442	-1497.6	1494.7	1474.8
5220	-2.9330	-43.654	-1503.4	1500.5	1480.6
5221	-2.9331	-43.803	-1507.8	1504.9	1484.8
5222	-2.9331	-43.890	-1510.7	1507.8	1487.7
5223	-2.9331	-43.915	-1512.1	1509.2	1489.1
5224	-2.9331	-43.878	-1512.1	1509.2	1489.1
5225	-2.9331	-43.780	-1510.6	1507.7	1487.7
5226	-2.9330	-43.621	-1507.7	1504.8	1484.8
5227	-2.9330	-43.401	-1503.3	1500.4	1480.6
5228	-2.9329	-43.121	-1497.5	1494.6	1474.9
5229	-2.9327	-42.781	-1490.3	1487.4	1467.9
5230	-2.9326	-42.381	-1481.7	1478.8	1459.4
5231	-2.9324	-41.922	-1471.7	1468.7	1449.6
5232	-2.9321	-41.405	-1460.3	1457.3	1438.5
5233	-2.9319	-40.830	-1447.5	1444.5	1426.0
5234	-2.9316	-40.197	-1433.3	1430.4	1412.1
5235	-2.9313	-39.508	-1417.8	1414.9	1396.9
5236	-2.9310	-38.762	-1400.9	1398.0	1380.4
5237	-2.9307	-37.960	-1382.8	1379.8	1362.7
5238	-2.9303	-37.103	-1363.3	1360.4	1343.6
5239	-2.9299	-36.191	-1342.5	1339.6	1323.3
5240	-2.9295	-35.225	-1320.5	1317.5	1301.7
5241	-2.9290	-34.206	-1297.2	1294.2	1278.9
5242	-2.9286	-33.135	-1272.6	1269.7	1254.9
5243	-2.9281	-32.012	-1246.8	1243.9	1229.6
5244	-2.9276	-30.838	-1219.9	1216.9	1203.2

1

```
***** ANSYS - ENGINEERING ANALYSIS SYSTEM  RELEASE 5.7.1   *****
ANSYS/Mechanical U
00251976          VERSION=INTEL NT      11:31:49  DEC 23, 2005 CP=   1165.813

 Point Beach Strainer Inner Rim Plate Analysis


 ***** POST1 NODAL STRESS LISTING *****

 LOAD STEP=     4  SUBSTEP=    15
  TIME=    4.0000      LOAD CASE=   0
 SHELL NODAL RESULTS ARE AT BOTTOM
```

NODE	S1	S2	S3	SINT	SEQV
5245	-2.9270	-29.613	-1191.7	1188.8	1175.7
5246	-2.9265	-28.340	-1162.4	1159.5	1147.0
5247	-2.9259	-27.017	-1131.9	1129.0	1117.2
5248	-2.9253	-25.647	-1100.4	1097.4	1086.3
5249	-2.9247	-24.230	-1067.7	1064.8	1054.3
5250	-2.9240	-22.767	-1034.0	1031.0	1021.3
5251	-2.9234	-21.258	-999.17	996.24	987.20
5252	-2.9227	-19.706	-963.35	960.43	952.15
5253	-2.9220	-18.109	-926.53	923.61	916.11
5254	-2.9213	-16.470	-888.74	885.82	879.13
5255	-2.9205	-14.789	-850.01	847.08	841.21
5256	-2.9198	-13.066	-810.35	807.43	802.40
5257	-2.9190	-11.303	-769.79	766.87	762.72
5258	-2.9182	-9.5008	-728.37	725.45	722.18
5259	-2.9174	-7.6590	-686.11	683.20	680.84
5260	-2.9166	-5.7785	-643.05	640.13	638.71
5261	-2.9157	-3.8595	-599.20	596.29	595.82
5262	-1.9021	-2.9149	-554.61	552.71	552.20
5263	0.93887E-01	-2.9140	-509.30	509.39	507.90
5264	2.1292	-2.9132	-463.30	465.43	462.93
5265	4.2054	-2.9123	-416.66	420.86	417.35
5266	6.3248	-2.9114	-369.39	375.71	371.18
5267	8.4918	-2.9105	-321.54	330.03	324.48
5268	10.714	-2.9095	-273.15	283.86	277.30
5269	13.004	-2.9086	-224.26	237.26	229.72
5270	15.388	-2.9076	-174.93	190.32	181.86
5271	17.925	-2.9067	-125.25	143.17	133.98
5272	20.791	-2.9057	-75.423	96.214	86.826
5273	24.796	-2.9047	-26.295	51.091	44.298
5274	38.854	13.195	-2.9039	41.758	36.478
5275	82.514	23.470	-2.9029	85.417	75.756
5276	132.97	27.319	-2.9019	135.87	123.56
5277	184.49	30.438	-2.9009	187.39	173.15
5278	236.47	33.429	-2.8999	239.37	223.43
5279	288.73	36.453	-2.8989	291.63	274.08
5280	341.19	39.591	-2.8979	344.09	324.93
5281	393.79	42.904	-2.8969	396.69	375.88
5282	446.48	46.457	-2.8959	449.38	426.84

1

```
***** ANSYS - ENGINEERING ANALYSIS SYSTEM  RELEASE 5.7.1   *****
ANSYS/Mechanical U
00251976          VERSION=INTEL NT      11:31:49  DEC 23, 2005 CP=   1165.828

 Point Beach Strainer Inner Rim Plate Analysis


 ***** POST1 NODAL STRESS LISTING *****

 LOAD STEP=     4  SUBSTEP=    15
  TIME=    4.0000      LOAD CASE=   0
 SHELL NODAL RESULTS ARE AT BOTTOM
```

NODE	S1	S2	S3	SINT	SEQV
5283	499.22	50.323	-2.8948	502.11	477.73
5284	551.96	54.591	-2.8938	554.86	528.47
5285	604.67	59.373	-2.8928	607.57	578.95
5286	657.31	64.812	-2.8918	660.20	629.09
5287	709.82	71.087	-2.8908	712.72	678.76
5288	762.18	78.426	-2.8898	765.07	727.83
5289	814.35	87.120	-2.8888	817.24	776.16
5290	866.31	97.539	-2.8879	869.20	823.59
5291	918.08	110.16	-2.8869	920.97	869.98
5292	969.79	125.57	-2.8859	972.68	915.23
5293	1021.7	144.59	-2.8849	1024.6	959.41
5294	1074.6	168.35	-2.8839	1077.5	1002.9
5295	1130.3	198.71	-2.8828	1133.2	1047.1
5296	1193.8	237.75	-2.8817	1196.6	1096.3
5297	1275.2	282.02	-2.8801	1278.1	1162.1
5298	1384.0	304.42	-2.8781	1386.9	1261.6
5299	-2.9320	-46.849	-1452.9	1449.9	1428.5
5300	-2.9322	-47.378	-1464.5	1461.6	1439.9
5301	-2.9324	-47.834	-1474.7	1471.8	1449.8
5302	-2.9326	-48.218	-1483.4	1480.5	1458.4
5303	-2.9327	-48.531	-1490.7	1487.7	1465.5
5304	-2.9328	-48.772	-1496.5	1493.5	1471.2
5305	-2.9329	-48.943	-1500.8	1497.9	1475.4
5306	-2.9330	-49.044	-1503.7	1500.7	1478.2
5307	-2.9330	-49.075	-1505.1	1502.2	1479.6
5308	-2.9330	-49.036	-1505.1	1502.1	1479.6
5309	-2.9330	-48.928	-1503.6	1500.7	1478.2
5310	-2.9329	-48.752	-1500.7	1497.8	1475.4
5311	-2.9328	-48.507	-1496.4	1493.4	1471.2
5312	-2.9327	-48.195	-1490.6	1487.7	1465.6
5313	-2.9326	-47.815	-1483.5	1480.5	1458.6
5314	-2.9324	-47.368	-1474.9	1472.0	1450.3
5315	-2.9322	-46.855	-1465.0	1462.0	1440.6
5316	-2.9320	-46.275	-1453.6	1450.7	1429.5
5317	-2.9318	-45.631	-1440.9	1438.0	1417.1
5318	-2.9315	-44.921	-1426.9	1424.0	1403.4
5319	-2.9312	-44.148	-1411.5	1408.6	1388.4
5320	-2.9309	-43.311	-1394.8	1391.8	1372.1

1

```
***** ANSYS - ENGINEERING ANALYSIS SYSTEM  RELEASE 5.7.1   *****
ANSYS/Mechanical U
00251976          VERSION=INTEL NT      11:31:49  DEC 23, 2005 CP=   1165.859

 Point Beach Strainer Inner Rim Plate Analysis


 ***** POST1 NODAL STRESS LISTING *****

 LOAD STEP=     4  SUBSTEP=    15
  TIME=    4.0000      LOAD CASE=   0
 SHELL NODAL RESULTS ARE AT BOTTOM
```

NODE	S1	S2	S3	SINT	SEQV
5321	-2.9306	-42.411	-1376.7	1373.8	1354.5
5322	-2.9302	-41.449	-1357.4	1354.5	1335.6
5323	-2.9298	-40.426	-1336.8	1333.9	1315.5
5324	-2.9294	-39.342	-1314.9	1312.0	1294.2
5325	-2.9289	-38.199	-1291.8	1288.9	1271.6
5326	-2.9285	-36.996	-1267.4	1264.5	1247.8
5327	-2.9280	-35.736	-1241.9	1238.9	1222.9
5328	-2.9275	-34.418	-1215.1	1212.2	1196.7
5329	-2.9269	-33.043	-1187.2	1184.2	1169.5
5330	-2.9264	-31.614	-1158.1	1155.2	1141.1
5331	-2.9258	-30.130	-1127.9	1124.9	1111.6
5332	-2.9252	-28.592	-1096.5	1093.6	1081.0
5333	-2.9246	-27.002	-1064.1	1061.2	1049.4
5334	-2.9240	-25.361	-1030.6	1027.7	1016.7
5335	-2.9233	-23.669	-996.11	993.19	982.98
5336	-2.9226	-21.928	-960.57	957.65	948.29
5337	-2.9219	-20.138	-924.04	921.12	912.63
5338	-2.9212	-18.301	-886.54	883.62	876.03
5339	-2.9205	-16.418	-848.10	845.18	838.51
5340	-2.9197	-14.490	-808.74	805.82	800.10
5341	-2.9190	-12.518	-768.50	765.58	760.83
5342	-2.9182	-10.503	-727.39	724.47	720.71
5343	-2.9174	-8.4457	-685.46	682.54	679.79
5344	-2.9166	-6.3475	-642.71	639.80	638.09
5345	-2.9158	-4.2091	-599.20	596.28	595.63
5346	-2.0315	-2.9149	-554.93	552.90	552.46
5347	0.18482	-2.9141	-509.95	510.14	508.60
5348	2.4390	-2.9132	-464.29	466.73	464.08
5349	4.7309	-2.9123	-417.97	422.70	418.93
5350	7.0601	-2.9114	-371.03	378.09	373.21
5351	9.4270	-2.9105	-323.50	332.93	326.93
5352	11.832	-2.9096	-275.41	287.24	280.16
5353	14.276	-2.9087	-226.79	241.07	232.95
5354	16.761	-2.9077	-177.68	194.44	185.39
5355	19.289	-2.9068	-128.11	147.39	137.65
5356	21.864	-2.9058	-78.107	99.971	90.175
5357	24.491	-2.9048	-27.716	52.207	45.231
5358	27.180	23.030	-2.9040	30.084	28.238

1

```
***** ANSYS - ENGINEERING ANALYSIS SYSTEM  RELEASE 5.7.1   *****
ANSYS/Mechanical U
00251976          VERSION=INTEL NT      11:31:49  DEC 23, 2005 CP=   1165.859

 Point Beach Strainer Inner Rim Plate Analysis


 ***** POST1 NODAL STRESS LISTING *****

 LOAD STEP=     4  SUBSTEP=    15
  TIME=    4.0000      LOAD CASE=   0
 SHELL NODAL RESULTS ARE AT BOTTOM
```

NODE	S1	S2	S3	SINT	SEQV
5359	74.109	29.927	-2.9030	77.012	66.935
5360	125.47	32.759	-2.9020	128.37	114.78
5361	177.09	35.684	-2.9010	179.99	164.14
5362	228.93	38.723	-2.9000	231.83	214.07
5363	280.95	41.903	-2.8990	283.85	264.31
5364	333.13	45.255	-2.8980	336.02	314.72
5365	385.41	48.825	-2.8970	388.31	365.21
5366	437.78	52.666	-2.8960	440.67	415.69
5367	490.18	56.852	-2.8950	493.08	466.09
5368	542.60	61.474	-2.8940	545.49	516.32
5369	594.97	66.654	-2.8930	597.86	566.30
5370	647.27	72.544	-2.8920	650.16	615.92
5371	699.44	79.347	-2.8910	702.33	665.04
5372	751.45	87.325	-2.8900	754.34	713.52
5373	803.24	96.821	-2.8891	806.13	761.19
5374	854.77	108.29	-2.8881	857.66	807.83
5375	906.04	122.36	-2.8871	908.92	853.23
5376	957.11	139.86	-2.8861	960.00	897.18
5377	1008.3	161.99	-2.8851	1011.2	939.63
5378	1060.2	190.31	-2.8842	1063.1	980.89
5379	1114.4	226.97	-2.8831	1117.3	1022.0
5380	1173.7	276.31	-2.8820	1176.6	1064.8
5381	1246.2	354.38	-2.8806	1249.1	1114.3
5382	1368.3	518.14	-2.8783	1371.1	1198.8
5383	-2.9321	-41.955	-1459.5	1456.5	1437.4
5384	-2.9324	-42.423	-1471.2	1468.3	1449.0
5385	-2.9326	-42.826	-1481.5	1478.6	1459.0
5386	-2.9327	-43.165	-1490.3	1487.4	1467.6
5387	-2.9329	-43.441	-1497.6	1494.7	1474.8
5388	-2.9330	-43.653	-1503.4	1500.5	1480.6
5389	-2.9331	-43.803	-1507.8	1504.9	1484.8
5390	-2.9331	-43.890	-1510.7	1507.8	1487.7
5391	-2.9331	-43.915	-1512.1	1509.2	1489.1
5392	-2.9331	-43.878	-1512.1	1509.2	1489.1
5393	-2.9331	-43.780	-1510.6	1507.7	1487.7
5394	-2.9330	-43.621	-1507.7	1504.8	1484.8
5395	-2.9330	-43.401	-1503.3	1500.4	1480.6
5396	-2.9329	-43.121	-1497.5	1494.6	1474.9

1

```
***** ANSYS - ENGINEERING ANALYSIS SYSTEM  RELEASE 5.7.1   *****
ANSYS/Mechanical U
00251976          VERSION=INTEL NT      11:31:49  DEC 23, 2005 CP=   1165.859

 Point Beach Strainer Inner Rim Plate Analysis


 ***** POST1 NODAL STRESS LISTING *****

 LOAD STEP=     4  SUBSTEP=    15
  TIME=    4.0000      LOAD CASE=   0
 SHELL NODAL RESULTS ARE AT BOTTOM
```

NODE	S1	S2	S3	SINT	SEQV
5397	-2.9327	-42.781	-1490.3	1487.4	1467.9
5398	-2.9326	-42.382	-1481.7	1478.8	1459.4
5399	-2.9324	-41.923	-1471.7	1468.7	1449.6
5400	-2.9321	-41.406	-1460.3	1457.3	1438.5
5401	-2.9319	-40.830	-1447.5	1444.5	1426.0
5402	-2.9316	-40.198	-1433.3	1430.4	1412.1
5403	-2.9313	-39.508	-1417.8	1414.9	1396.9
5404	-2.9310	-38.761	-1400.9	1398.0	1380.4
5405	-2.9307	-37.959	-1382.8	1379.8	1362.7
5406	-2.9303	-37.102	-1363.3	1360.4	1343.6
5407	-2.9299	-36.190	-1342.5	1339.6	1323.3
5408	-2.9295	-35.223	-1320.5	1317.5	1301.7
5409	-2.9290	-34.204	-1297.2	1294.2	1278.9
5410	-2.9286	-33.132	-1272.6	1269.7	1254.9
5411	-2.9281	-32.009	-1246.8	1243.9	1229.6
5412	-2.9276	-30.834	-1219.9	1216.9	1203.2
5413	-2.9270	-29.609	-1191.7	1188.8	1175.7
5414	-2.9265	-28.335	-1162.4	1159.5	1147.0
5415	-2.9259	-27.012	-1131.9	1129.0	1117.2
5416	-2.9253	-25.641	-1100.4	1097.4	1086.3
5417	-2.9247	-24.224	-1067.7	1064.8	1054.3
5418	-2.9240	-22.760	-1034.0	1031.0	1021.3
5419	-2.9234	-21.251	-999.17	996.25	987.21
5420	-2.9227	-19.697	-963.35	960.43	952.15
5421	-2.9220	-18.100	-926.54	923.61	916.12
5422	-2.9213	-16.461	-888.75	885.82	879.13
5423	-2.9205	-14.779	-850.01	847.09	841.22
5424	-2.9198	-13.057	-810.35	807.43	802.41
5425	-2.9190	-11.294	-769.79	766.87	762.72
5426	-2.9182	-9.4923	-728.37	725.46	722.19
5427	-2.9174	-7.6513	-686.12	683.20	680.84
5428	-2.9166	-5.7719	-643.05	640.13	638.71
5429	-2.9157	-3.8545	-599.20	596.29	595.82
5430	-1.8991	-2.9149	-554.61	552.71	552.20
5431	0.94363E-01	-2.9140	-509.30	509.39	507.90
5432	2.1266	-2.9132	-463.30	465.43	462.93
5433	4.1990	-2.9123	-416.65	420.85	417.34
5434	6.3139	-2.9114	-369.38	375.70	371.17

1

```
***** ANSYS - ENGINEERING ANALYSIS SYSTEM  RELEASE 5.7.1   *****
ANSYS/Mechanical U
00251976          VERSION=INTEL NT      11:31:49  DEC 23, 2005 CP=   1165.875

 Point Beach Strainer Inner Rim Plate Analysis


 ***** POST1 NODAL STRESS LISTING *****

 LOAD STEP=     4  SUBSTEP=    15
  TIME=    4.0000      LOAD CASE=   0
 SHELL NODAL RESULTS ARE AT BOTTOM
```

NODE	S1	S2	S3	SINT	SEQV
5435	8.4754	-2.9105	-321.53	330.01	324.46
5436	10.691	-2.9095	-273.14	283.83	277.28
5437	12.972	-2.9086	-224.24	237.21	229.68
5438	15.346	-2.9076	-174.90	190.25	181.81
5439	17.868	-2.9067	-125.21	143.08	133.90
5440	20.707	-2.9057	-75.361	96.068	86.707
5441	24.648	-2.9047	-26.171	50.819	44.063
5442	38.585	13.439	-2.9039	41.489	36.199
5443	82.402	23.556	-2.9029	85.305	75.631
5444	132.91	27.352	-2.9019	135.81	123.49
5445	184.45	30.449	-2.9009	187.35	173.11
5446	236.45	33.427	-2.8999	239.35	223.41
5447	288.72	36.443	-2.8989	291.62	274.07
5448	341.18	39.576	-2.8979	344.08	324.93
5449	393.79	42.885	-2.8969	396.69	375.89
5450	446.49	46.434	-2.8959	449.38	426.86
5451	499.23	50.297	-2.8948	502.13	477.76
5452	551.99	54.562	-2.8938	554.88	528.50
5453	604.70	59.344	-2.8928	607.60	578.99
5454	657.35	64.785	-2.8918	660.24	629.14
5455	709.88	71.069	-2.8908	712.77	678.82
5456	762.24	78.430	-2.8898	765.13	727.89
5457	814.41	87.168	-2.8888	817.30	776.20
5458	866.36	97.665	-2.8879	869.25	823.59
5459	918.10	110.41	-2.8869	920.98	869.89
5460	969.73	126.01	-2.8859	972.62	915.01
5461	1021.6	145.26	-2.8849	1024.4	958.99
5462	1074.3	169.31	-2.8839	1077.2	1002.3
5463	1129.9	199.93	-2.8828	1132.8	1046.2
5464	1193.1	239.12	-2.8817	1196.0	1095.3
5465	1274.4	283.30	-2.8801	1277.3	1161.0
5466	1383.2	305.49	-2.8781	1386.1	1260.5
5467	-2.9325	-28.846	-1480.2	1477.3	1464.5
5468	-2.9328	-29.156	-1492.2	1489.3	1476.4
5469	-2.9330	-29.423	-1502.8	1499.8	1486.8
5470	-2.9331	-29.646	-1511.8	1508.8	1495.7
5471	-2.9333	-29.826	-1519.3	1516.3	1503.1
5472	-2.9334	-29.963	-1525.2	1522.3	1509.0

1

```
***** ANSYS - ENGINEERING ANALYSIS SYSTEM  RELEASE 5.7.1   *****
ANSYS/Mechanical U
00251976          VERSION=INTEL NT      11:31:49  DEC 23, 2005 CP=   1165.891

 Point Beach Strainer Inner Rim Plate Analysis


 ***** POST1 NODAL STRESS LISTING *****

 LOAD STEP=     4  SUBSTEP=    15
  TIME=    4.0000      LOAD CASE=   0
 SHELL NODAL RESULTS ARE AT BOTTOM
```

NODE	S1	S2	S3	SINT	SEQV
5473	-2.9335	-30.058	-1529.7	1526.8	1513.4
5474	-2.9335	-30.111	-1532.7	1529.7	1516.3
5475	-2.9336	-30.122	-1534.1	1531.2	1517.8
5476	-2.9336	-30.092	-1534.1	1531.2	1517.8
5477	-2.9335	-30.020	-1532.6	1529.7	1516.3
5478	-2.9335	-29.907	-1529.6	1526.7	1513.4
5479	-2.9334	-29.753	-1525.1	1522.2	1509.0
5480	-2.9333	-29.559	-1519.2	1516.3	1503.1
5481	-2.9331	-29.324	-1511.8	1508.9	1495.9
5482	-2.9330	-29.049	-1503.0	1500.1	1487.2
5483	-2.9328	-28.735	-1492.7	1489.8	1477.1
5484	-2.9325	-28.381	-1481.0	1478.1	1465.5
5485	-2.9323	-27.988	-1467.9	1465.0	1452.6
5486	-2.9320	-27.556	-1453.4	1450.5	1438.3
5487	-2.9317	-27.086	-1437.5	1434.6	1422.7
5488	-2.9314	-26.577	-1420.3	1417.4	1405.7
5489	-2.9310	-26.031	-1401.7	1398.7	1387.3
5490	-2.9306	-25.447	-1381.7	1378.8	1367.7
5491	-2.9302	-24.826	-1360.4	1357.5	1346.7
5492	-2.9298	-24.169	-1337.9	1334.9	1324.4
5493	-2.9294	-23.475	-1314.0	1311.1	1300.9
5494	-2.9289	-22.746	-1288.8	1285.9	1276.1
5495	-2.9284	-21.981	-1262.5	1259.5	1250.1
5496	-2.9279	-21.182	-1234.8	1231.9	1222.9
5497	-2.9273	-20.347	-1206.0	1203.1	1194.5
5498	-2.9267	-19.479	-1176.0	1173.0	1164.9
5499	-2.9261	-18.577	-1144.8	1141.9	1134.1
5500	-2.9255	-17.642	-1112.4	1109.5	1102.2
5501	-2.9249	-16.674	-1079.0	1076.1	1069.3
5502	-2.9242	-15.673	-1044.4	1041.5	1035.2
5503	-2.9235	-14.640	-1008.8	1005.9	1000.1
5504	-2.9228	-13.575	-972.13	969.21	963.92
5505	-2.9221	-12.478	-934.43	931.51	926.77
5506	-2.9214	-11.350	-895.74	892.82	888.63
5507	-2.9206	-10.191	-856.08	853.16	849.54
5508	-2.9199	-8.9997	-815.48	812.56	809.53
5509	-2.9191	-7.7770	-773.96	771.04	768.63
5510	-2.9183	-6.5221	-731.57	728.65	726.86

1

```
***** ANSYS - ENGINEERING ANALYSIS SYSTEM  RELEASE 5.7.1   *****
ANSYS/Mechanical U
00251976          VERSION=INTEL NT      11:31:49  DEC 23, 2005 CP=   1165.906

 Point Beach Strainer Inner Rim Plate Analysis


 ***** POST1 NODAL STRESS LISTING *****

 LOAD STEP=     4  SUBSTEP=    15
  TIME=    4.0000      LOAD CASE=   0
 SHELL NODAL RESULTS ARE AT BOTTOM
```

NODE	S1	S2	S3	SINT	SEQV
5511	-2.9174	-5.2341	-688.32	685.40	684.25
5512	-2.9166	-3.9119	-644.25	641.34	640.84
5513	-2.5537	-2.9157	-599.40	596.84	596.66
5514	-1.1567	-2.9149	-553.79	552.63	551.75
5515	0.28291	-2.9140	-507.46	507.74	506.15
5516	1.7711	-2.9131	-460.44	462.22	459.89
5517	3.3167	-2.9122	-412.79	416.11	413.03
5518	4.9332	-2.9112	-364.54	369.47	365.61
5519	6.6428	-2.9103	-315.75	322.39	317.72
5520	8.4833	-2.9094	-266.49	274.97	269.46
5521	10.524	-2.9084	-216.86	227.38	220.97
5522	12.911	-2.9074	-167.04	179.95	172.59
5523	15.992	-2.9065	-117.41	133.40	125.03
5524	20.837	-2.9055	-69.073	89.910	80.702
5525	31.708	-2.9045	-26.321	58.029	50.566
5526	60.349	-0.92984	-2.9038	63.253	62.290
5527	105.23	8.6002	-2.9025	108.14	102.87
5528	155.34	13.257	-2.9015	158.24	150.82
5529	207.19	16.508	-2.9005	210.09	201.09
5530	259.84	19.258	-2.8995	262.74	252.39
5531	312.96	21.830	-2.8984	315.86	304.25
5532	366.39	24.377	-2.8974	369.29	356.43
5533	420.01	26.996	-2.8964	422.91	408.78
5534	473.76	29.763	-2.8954	476.66	461.19
5535	527.58	32.752	-2.8943	530.47	513.58
5536	581.41	36.043	-2.8933	584.30	565.84
5537	635.21	39.730	-2.8923	638.10	617.89
5538	688.93	43.924	-2.8912	691.82	669.64
5539	742.54	48.761	-2.8902	745.43	720.99
5540	796.00	54.399	-2.8892	798.88	771.84
5541	849.28	61.026	-2.8882	852.17	822.08
5542	902.39	68.849	-2.8872	905.28	871.62
5543	955.34	78.078	-2.8862	958.23	920.42
5544	1008.2	88.892	-2.8852	1011.1	968.50
5545	1061.3	101.34	-2.8841	1064.2	1016.1
5546	1114.9	115.10	-2.8831	1117.8	1063.7
5547	1169.7	128.79	-2.8821	1172.6	1112.6
5548	1224.8	139.04	-2.8811	1227.7	1163.3

1

```
***** ANSYS - ENGINEERING ANALYSIS SYSTEM  RELEASE 5.7.1   *****
ANSYS/Mechanical U
00251976          VERSION=INTEL NT      11:31:49  DEC 23, 2005 CP=   1165.938

 Point Beach Strainer Inner Rim Plate Analysis


 ***** POST1 NODAL STRESS LISTING *****

 LOAD STEP=     4  SUBSTEP=    15
  TIME=    4.0000      LOAD CASE=   0
 SHELL NODAL RESULTS ARE AT BOTTOM
```

NODE	S1	S2	S3	SINT	SEQV
5549	1274.5	140.68	-2.8801	1277.4	1212.0
5550	1299.9	129.83	-2.8796	1302.8	1241.8
5551	-2.9332	-12.321	-1517.6	1514.7	1510.0
5552	-2.9335	-12.453	-1530.2	1527.3	1522.5
5553	-2.9337	-12.565	-1541.2	1538.2	1533.4
5554	-2.9339	-12.658	-1550.5	1547.6	1542.8
5555	-2.9340	-12.731	-1558.4	1555.4	1550.5
5556	-2.9341	-12.786	-1564.6	1561.7	1556.7
5557	-2.9342	-12.823	-1569.2	1566.3	1561.4
5558	-2.9343	-12.841	-1572.3	1569.4	1564.5
5559	-2.9343	-12.840	-1573.9	1570.9	1566.0
5560	-2.9343	-12.822	-1573.9	1570.9	1566.0
5561	-2.9343	-12.785	-1572.3	1569.3	1564.4
5562	-2.9342	-12.731	-1569.2	1566.2	1561.3
5563	-2.9341	-12.659	-1564.5	1561.6	1556.7
5564	-2.9340	-12.569	-1558.3	1555.4	1550.6
5565	-2.9339	-12.462	-1550.6	1547.7	1542.9
5566	-2.9337	-12.337	-1541.4	1538.5	1533.8
5567	-2.9335	-12.195	-1530.7	1527.8	1523.2
5568	-2.9333	-12.036	-1518.5	1515.6	1511.1
5569	-2.9330	-11.859	-1504.9	1501.9	1497.5
5570	-2.9327	-11.666	-1489.8	1486.8	1482.5
5571	-2.9324	-11.455	-1473.2	1470.3	1466.0
5572	-2.9320	-11.228	-1455.2	1452.3	1448.1
5573	-2.9317	-10.983	-1435.8	1432.9	1428.9
5574	-2.9313	-10.722	-1415.0	1412.1	1408.2
5575	-2.9309	-10.443	-1392.8	1389.9	1386.2
5576	-2.9304	-10.148	-1369.3	1366.4	1362.8
5577	-2.9299	-9.8367	-1344.4	1341.5	1338.0
5578	-2.9294	-9.5082	-1318.2	1315.3	1312.0
5579	-2.9289	-9.1628	-1290.7	1287.8	1284.7
5580	-2.9284	-8.8005	-1261.9	1259.0	1256.1
5581	-2.9278	-8.4212	-1231.9	1228.9	1226.2
5582	-2.9272	-8.0248	-1200.6	1197.7	1195.1
5583	-2.9266	-7.6110	-1168.1	1165.2	1162.8
5584	-2.9259	-7.1796	-1134.4	1131.5	1129.3
5585	-2.9253	-6.7302	-1099.5	1096.6	1094.7
5586	-2.9246	-6.2625	-1063.5	1060.6	1058.9

1

```
***** ANSYS - ENGINEERING ANALYSIS SYSTEM  RELEASE 5.7.1   *****
ANSYS/Mechanical U
00251976          VERSION=INTEL NT      11:31:49  DEC 23, 2005 CP=   1165.969

 Point Beach Strainer Inner Rim Plate Analysis


 ***** POST1 NODAL STRESS LISTING *****

 LOAD STEP=     4  SUBSTEP=    15
  TIME=    4.0000      LOAD CASE=   0
 SHELL NODAL RESULTS ARE AT BOTTOM
```

NODE	S1	S2	S3	SINT	SEQV
5587	-2.9239	-5.7758	-1026.4	1023.5	1022.1
5588	-2.9231	-5.2695	-988.21	985.29	984.12
5589	-2.9224	-4.7426	-948.95	946.03	945.12
5590	-2.9216	-4.1941	-908.66	905.73	905.10
5591	-2.9208	-3.6224	-867.36	864.44	864.09
5592	-2.9200	-3.0257	-825.09	822.17	822.12
5593	-2.4017	-2.9192	-781.88	779.48	779.22
5594	-1.7472	-2.9184	-737.77	736.02	735.44
5595	-1.0582	-2.9175	-692.78	691.72	690.80
5596	-0.32933	-2.9166	-646.96	646.63	645.34
5597	0.44659	-2.9157	-600.34	600.78	599.11
5598	1.2796	-2.9148	-552.96	554.24	552.15
5599	2.1835	-2.9139	-504.87	507.05	504.52
5600	3.1788	-2.9130	-456.13	459.30	456.29
5601	4.2953	-2.9120	-406.79	411.08	407.53
5602	5.5804	-2.9110	-356.94	362.52	358.35
5603	7.1110	-2.9101	-306.68	313.79	308.91
5604	9.0226	-2.9091	-256.20	265.22	259.46
5605	11.572	-2.9081	-205.77	217.35	210.48
5606	15.302	-2.9071	-155.98	171.29	162.95
5607	21.500	-2.9061	-108.15	129.65	119.34
5608	33.437	-2.9050	-65.589	99.026	86.765
5609	57.396	-2.9040	-34.606	92.002	80.949
5610	95.871	-2.9029	-17.732	113.60	106.96
5611	143.14	-2.9019	-9.2827	152.42	149.34
5612	194.37	-2.9008	-4.4524	198.82	198.05
5613	247.50	-1.2167	-2.8999	250.40	249.56
5614	301.67	1.2441	-2.8988	304.57	302.52
5615	356.50	3.3056	-2.8977	359.39	356.33
5616	411.74	5.1658	-2.8966	414.64	410.67
5617	467.26	6.9452	-2.8955	470.16	465.32
5618	522.96	8.7286	-2.8945	525.86	520.14
5619	578.75	10.585	-2.8934	581.65	575.02
5620	634.57	12.577	-2.8923	637.46	629.87
5621	690.35	14.770	-2.8912	693.24	684.58
5622	746.03	17.232	-2.8902	748.92	739.07
5623	801.59	20.036	-2.8891	804.47	793.26
5624	856.96	23.259	-2.8881	859.85	847.08

1

***** ANSYS - ENGINEERING ANALYSIS SYSTEM RELEASE 5.7.1 *****
ANSYS/Mechanical U
00251976 VERSION=INTEL NT 11:31:49 DEC 23, 2005 CP= 1165.969

Point Beach Strainer Inner Rim Plate Analysis

***** POST1 NODAL STRESS LISTING *****

LOAD STEP= 4 SUBSTEP= 15
TIME= 4.0000 LOAD CASE= 0
SHELL NODAL RESULTS ARE AT BOTTOM

NODE	S1	S2	S3	SINT	SEQV
5625	912.12	26.974	-2.8870	915.01	900.45
5626	967.03	31.233	-2.8859	969.92	953.32
5627	1021.7	36.031	-2.8849	1024.5	1005.6
5628	1075.9	41.235	-2.8839	1078.8	1057.4
5629	1129.4	46.466	-2.8828	1132.3	1108.5
5630	1181.6	50.961	-2.8819	1184.4	1158.5
5631	1230.4	53.534	-2.8809	1233.3	1206.1
5632	1272.2	52.876	-2.8801	1275.1	1248.1
5633	1300.7	48.400	-2.8796	1303.5	1278.7
5634	1308.5	41.461	-2.8795	1311.3	1289.7
5635	1354.6	8.0810	-2.8786	1357.4	1352.0
5636	1271.7	9.0803	-2.8802	1274.6	1268.6
5637	1174.7	9.6313	-2.8820	1177.5	1171.3
5638	1067.6	9.2112	-2.8841	1070.5	1064.5
5639	955.38	7.0676	-2.8863	958.27	953.33
5640	841.58	3.4503	-2.8885	844.47	841.31
5641	728.61	-1.2991	-2.8908	731.50	730.71
5642	617.96	-2.8928	-6.9314	624.89	622.88
5643	510.60	-2.8950	-13.491	524.10	518.88
5644	407.48	-2.8971	-21.452	428.93	419.96
5645	309.96	-2.8991	-32.015	341.97	328.39
5646	220.72	-2.9011	-47.808	268.53	249.13
5647	145.03	-2.9030	-74.107	219.14	193.62
5648	89.939	-2.9049	-118.02	207.96	180.44
5649	56.641	-2.9067	-180.78	237.42	213.96
5650	37.968	-2.9085	-255.28	293.25	275.10
5651	26.977	-2.9102	-334.63	361.60	347.62
5652	19.955	-2.9118	-415.15	435.10	424.13
5653	15.137	-2.9134	-495.12	510.26	501.48
5654	11.646	-2.9150	-573.72	585.37	578.22
5655	9.0111	-2.9165	-650.51	659.52	653.64
5656	6.9601	-2.9180	-725.26	732.22	727.33
5657	5.3251	-2.9194	-797.83	803.15	799.06
5658	3.9971	-2.9207	-868.15	872.15	868.71
5659	2.9020	-2.9220	-936.19	939.10	936.20
5660	1.9878	-2.9233	-1001.9	1003.9	1001.5
5661	1.2169	-2.9245	-1065.4	1066.6	1064.5
5662	0.56114	-2.9257	-1126.5	1127.1	1125.3

1

```
***** ANSYS - ENGINEERING ANALYSIS SYSTEM  RELEASE 5.7.1   *****
ANSYS/Mechanical U
00251976          VERSION=INTEL NT      11:31:49  DEC 23, 2005 CP=   1165.984

 Point Beach Strainer Inner Rim Plate Analysis


 ***** POST1 NODAL STRESS LISTING *****

 LOAD STEP=     4  SUBSTEP=    15
  TIME=    4.0000      LOAD CASE=   0
 SHELL NODAL RESULTS ARE AT BOTTOM
```

NODE	S1	S2	S3	SINT	SEQV
5663	-0.55614E-03	-2.9268	-1185.4	1185.4	1183.9
5664	-0.48462	-2.9279	-1242.0	1241.5	1240.3
5665	-0.90387	-2.9290	-1296.3	1295.4	1294.4
5666	-1.2685	-2.9300	-1348.5	1347.2	1346.4
5667	-1.5867	-2.9309	-1398.4	1396.8	1396.2
5668	-1.8651	-2.9318	-1446.2	1444.3	1443.8
5669	-2.1092	-2.9327	-1491.9	1489.7	1489.3
5670	-2.3234	-2.9335	-1535.4	1533.1	1532.8
5671	-2.5115	-2.9343	-1576.8	1574.3	1574.1
5672	-2.6767	-2.9351	-1616.2	1613.6	1613.4
5673	-2.8215	-2.9358	-1653.6	1650.8	1650.8
5674	-2.9367	-2.9480	-1689.0	1686.1	1686.1
5675	-2.9371	-3.0589	-1722.4	1719.5	1719.5
5676	-2.9377	-3.1550	-1753.9	1751.0	1750.9
5677	-2.9383	-3.2380	-1783.5	1780.6	1780.5
5678	-2.9388	-3.3093	-1811.3	1808.3	1808.1
5679	-2.9393	-3.3697	-1837.1	1834.2	1834.0
5680	-2.9398	-3.4204	-1861.2	1858.3	1858.0
5681	-2.9402	-3.4621	-1883.5	1880.5	1880.3
5682	-2.9406	-3.4956	-1904.0	1901.1	1900.8
5683	-2.9409	-3.5215	-1922.8	1919.9	1919.6
5684	-2.9413	-3.5404	-1939.9	1936.9	1936.6
5685	-2.9416	-3.5529	-1955.3	1952.4	1952.1
5686	-2.9418	-3.5593	-1969.1	1966.1	1965.8
5687	-2.9421	-3.5602	-1981.2	1978.3	1978.0
5688	-2.9423	-3.5558	-1991.8	1988.9	1988.6
5689	-2.9424	-3.5466	-2000.8	1997.9	1997.6
5690	-2.9426	-3.5328	-2008.3	2005.3	2005.0
5691	-2.9427	-3.5148	-2014.2	2011.3	2011.0
5692	-2.9428	-3.4927	-2018.7	2015.7	2015.5
5693	-2.9428	-3.4669	-2021.7	2018.7	2018.5
5694	-2.9429	-3.4375	-2023.2	2020.3	2020.0
5695	-2.9429	-3.4046	-2023.4	2020.4	2020.2
5696	-2.9428	-3.3686	-2022.1	2019.2	2019.0
5697	-2.9428	-3.3294	-2019.5	2016.6	2016.4
5698	-2.9427	-3.2874	-2015.5	2012.6	2012.4
5699	-2.9426	-3.2425	-2010.2	2007.3	2007.2
5700	-2.9425	-3.1949	-2003.7	2000.7	2000.6

1

```
***** ANSYS - ENGINEERING ANALYSIS SYSTEM  RELEASE 5.7.1   *****
ANSYS/Mechanical U
00251976          VERSION=INTEL NT      11:31:49  DEC 23, 2005 CP=   1165.984

 Point Beach Strainer Inner Rim Plate Analysis


 ***** POST1 NODAL STRESS LISTING *****

 LOAD STEP=     4  SUBSTEP=    15
  TIME=    4.0000      LOAD CASE=   0
 SHELL NODAL RESULTS ARE AT BOTTOM
```

NODE	S1	S2	S3	SINT	SEQV
5701	-2.9423	-3.1447	-1995.8	1992.8	1992.7
5702	-2.9422	-3.0920	-1986.6	1983.7	1983.6
5703	-2.9420	-3.0368	-1976.2	1973.3	1973.3
5704	-2.9418	-2.9792	-1964.6	1961.7	1961.7
5705	-2.9193	-2.9415	-1951.8	1948.9	1948.9
5706	-2.8569	-2.9412	-1937.8	1935.0	1934.9
5707	-2.7922	-2.9409	-1922.6	1919.9	1919.8
5708	-2.7252	-2.9406	-1906.3	1903.6	1903.5
5709	-2.6559	-2.9403	-1888.9	1886.2	1886.1
5710	-2.5842	-2.9399	-1870.3	1867.7	1867.5
5711	-2.5101	-2.9396	-1850.6	1848.1	1847.9
5712	-2.4335	-2.9392	-1829.8	1827.4	1827.1
5713	-2.3543	-2.9388	-1808.0	1805.6	1805.3
5714	-2.2725	-2.9383	-1785.1	1782.8	1782.5
5715	-2.1879	-2.9379	-1761.1	1758.9	1758.5
5716	-2.1003	-2.9374	-1736.1	1734.0	1733.6
5717	-2.0097	-2.9369	-1710.1	1708.1	1707.6
5718	-1.9158	-2.9364	-1683.0	1681.1	1680.6
5719	-1.8183	-2.9358	-1655.0	1653.2	1652.6
5720	-1.7171	-2.9353	-1626.0	1624.3	1623.6
5721	-1.6117	-2.9347	-1595.9	1594.3	1593.7
5722	-1.5018	-2.9341	-1565.0	1563.5	1562.7
5723	-1.3871	-2.9335	-1533.0	1531.6	1530.8
5724	-1.2669	-2.9329	-1500.1	1498.8	1498.0
5725	-1.1408	-2.9322	-1466.2	1465.1	1464.2
5726	-1.0080	-2.9316	-1431.4	1430.4	1429.4
5727	-0.86786	-2.9309	-1395.6	1394.7	1393.7
5728	-0.71933	-2.9302	-1358.9	1358.2	1357.1
5729	-0.72437	-2.9302	-1358.9	1358.2	1357.1
5730	-0.87468	-2.9309	-1395.6	1394.7	1393.7
5731	-1.0158	-2.9316	-1431.4	1430.4	1429.4
5732	-1.1487	-2.9322	-1466.2	1465.1	1464.2
5733	-1.2746	-2.9329	-1500.1	1498.8	1498.0
5734	-1.3941	-2.9335	-1533.0	1531.6	1530.8
5735	-1.5079	-2.9341	-1565.0	1563.5	1562.7
5736	-1.6168	-2.9347	-1596.0	1594.3	1593.7
5737	-1.7211	-2.9353	-1626.0	1624.3	1623.6
5738	-1.8213	-2.9358	-1655.0	1653.2	1652.6

1

```
***** ANSYS - ENGINEERING ANALYSIS SYSTEM  RELEASE 5.7.1   *****
ANSYS/Mechanical U
00251976          VERSION=INTEL NT      11:31:49  DEC 23, 2005 CP=   1166.000

 Point Beach Strainer Inner Rim Plate Analysis


 ***** POST1 NODAL STRESS LISTING *****

 LOAD STEP=     4  SUBSTEP=    15
  TIME=    4.0000      LOAD CASE=   0
 SHELL NODAL RESULTS ARE AT BOTTOM
```

NODE	S1	S2	S3	SINT	SEQV
5739	-1.9178	-2.9364	-1683.1	1681.1	1680.6
5740	-2.0108	-2.9369	-1710.1	1708.1	1707.6
5741	-2.1007	-2.9374	-1736.1	1734.0	1733.6
5742	-2.1876	-2.9379	-1761.1	1758.9	1758.5
5743	-2.2717	-2.9383	-1785.1	1782.8	1782.5
5744	-2.3531	-2.9388	-1808.0	1805.6	1805.3
5745	-2.4320	-2.9392	-1829.8	1827.4	1827.1
5746	-2.5084	-2.9396	-1850.6	1848.1	1847.9
5747	-2.5825	-2.9399	-1870.3	1867.7	1867.5
5748	-2.6542	-2.9403	-1888.9	1886.2	1886.1
5749	-2.7236	-2.9406	-1906.3	1903.6	1903.5
5750	-2.7908	-2.9409	-1922.6	1919.9	1919.8
5751	-2.8556	-2.9412	-1937.8	1935.0	1934.9
5752	-2.9182	-2.9415	-1951.8	1948.9	1948.9
5753	-2.9418	-2.9784	-1964.6	1961.7	1961.7
5754	-2.9420	-3.0364	-1976.2	1973.3	1973.3
5755	-2.9422	-3.0919	-1986.6	1983.7	1983.6
5756	-2.9423	-3.1449	-1995.8	1992.8	1992.7
5757	-2.9425	-3.1955	-2003.7	2000.7	2000.6
5758	-2.9426	-3.2434	-2010.2	2007.3	2007.2
5759	-2.9427	-3.2886	-2015.5	2012.6	2012.4
5760	-2.9428	-3.3309	-2019.5	2016.6	2016.4
5761	-2.9428	-3.3703	-2022.1	2019.2	2019.0
5762	-2.9429	-3.4066	-2023.4	2020.4	2020.2
5763	-2.9429	-3.4396	-2023.2	2020.3	2020.0
5764	-2.9428	-3.4691	-2021.7	2018.7	2018.5
5765	-2.9428	-3.4950	-2018.7	2015.7	2015.5
5766	-2.9427	-3.5170	-2014.2	2011.3	2011.0
5767	-2.9426	-3.5348	-2008.3	2005.3	2005.0
5768	-2.9424	-3.5482	-2000.8	1997.9	1997.6
5769	-2.9423	-3.5569	-1991.8	1988.9	1988.6
5770	-2.9421	-3.5605	-1981.2	1978.3	1978.0
5771	-2.9418	-3.5587	-1969.1	1966.1	1965.8
5772	-2.9416	-3.5510	-1955.3	1952.4	1952.1
5773	-2.9413	-3.5371	-1939.9	1936.9	1936.6
5774	-2.9409	-3.5164	-1922.8	1919.8	1919.6
5775	-2.9406	-3.4884	-1904.0	1901.0	1900.8
5776	-2.9402	-3.4525	-1883.5	1880.5	1880.3

1

```
***** ANSYS - ENGINEERING ANALYSIS SYSTEM  RELEASE 5.7.1   *****
ANSYS/Mechanical U
00251976          VERSION=INTEL NT      11:31:49  DEC 23, 2005 CP=   1166.016

 Point Beach Strainer Inner Rim Plate Analysis


 ***** POST1 NODAL STRESS LISTING *****

 LOAD STEP=     4  SUBSTEP=    15
  TIME=    4.0000      LOAD CASE=   0
 SHELL NODAL RESULTS ARE AT BOTTOM
```

NODE	S1	S2	S3	SINT	SEQV
5777	-2.9398	-3.4081	-1861.2	1858.2	1858.0
5778	-2.9393	-3.3543	-1837.1	1834.2	1834.0
5779	-2.9388	-3.2905	-1811.2	1808.3	1808.1
5780	-2.9383	-3.2156	-1783.5	1780.6	1780.4
5781	-2.9377	-3.1288	-1753.9	1751.0	1750.9
5782	-2.9371	-3.0287	-1722.4	1719.5	1719.4
5783	-2.9143	-2.9364	-1689.0	1686.1	1686.1
5784	-2.7837	-2.9358	-1653.6	1650.8	1650.8
5785	-2.6354	-2.9351	-1616.2	1613.6	1613.4
5786	-2.4675	-2.9343	-1576.8	1574.4	1574.1
5787	-2.2774	-2.9335	-1535.4	1533.1	1532.8
5788	-2.0625	-2.9327	-1491.9	1489.8	1489.4
5789	-1.8195	-2.9318	-1446.2	1444.4	1443.8
5790	-1.5442	-2.9309	-1398.5	1396.9	1396.2
5791	-1.2317	-2.9300	-1348.5	1347.3	1346.4
5792	-0.87611	-2.9290	-1296.4	1295.5	1294.5
5793	-0.46971	-2.9279	-1242.1	1241.6	1240.4
5794	-0.29844E-02	-2.9268	-1185.5	1185.5	1184.0
5795	0.53624	-2.9257	-1126.6	1127.2	1125.4
5796	1.1638	-2.9245	-1065.5	1066.7	1064.6
5797	1.9003	-2.9233	-1002.1	1004.0	1001.6
5798	2.7734	-2.9220	-936.37	939.14	936.31
5799	3.8208	-2.9207	-868.34	872.17	868.81
5800	5.0946	-2.9194	-798.03	803.13	799.15
5801	6.6695	-2.9180	-725.47	732.14	727.39
5802	8.6557	-2.9165	-650.73	659.38	653.67
5803	11.223	-2.9150	-573.92	585.15	578.21
5804	14.647	-2.9134	-495.29	509.94	501.39
5805	19.401	-2.9118	-415.26	434.66	423.94
5806	26.370	-2.9102	-334.65	361.02	347.31
5807	37.329	-2.9085	-255.19	292.52	274.62
5808	56.019	-2.9067	-180.55	236.57	213.30
5809	89.448	-2.9049	-117.68	207.13	179.73
5810	144.84	-2.9030	-73.732	218.57	193.15
5811	220.92	-2.9011	-47.370	268.29	249.05
5812	310.56	-2.8991	-31.407	341.96	328.64
5813	408.48	-2.8971	-20.556	429.03	420.48
5814	512.00	-2.8950	-12.202	524.20	519.61

1

```
***** ANSYS - ENGINEERING ANALYSIS SYSTEM  RELEASE 5.7.1   *****
ANSYS/Mechanical U
00251976          VERSION=INTEL NT      11:31:49  DEC 23, 2005 CP=   1166.031

 Point Beach Strainer Inner Rim Plate Analysis


 ***** POST1 NODAL STRESS LISTING *****

 LOAD STEP=     4  SUBSTEP=    15
  TIME=    4.0000      LOAD CASE=   0
 SHELL NODAL RESULTS ARE AT BOTTOM
```

NODE	S1	S2	S3	SINT	SEQV
5815	619.72	-2.8928	-5.1652	624.88	623.75
5816	730.66	0.99507	-2.8907	733.55	731.61
5817	843.76	6.2728	-2.8885	846.65	842.10
5818	957.44	10.357	-2.8862	960.33	953.77
5819	1069.1	12.808	-2.8841	1072.0	1064.3
5820	1174.9	13.342	-2.8820	1177.8	1169.8
5821	1269.3	12.271	-2.8802	1272.2	1264.7
5822	1346.1	10.714	-2.8788	1349.0	1342.2
5823	1266.9	45.820	-2.8802	1269.8	1246.2
5824	1186.4	49.193	-2.8818	1189.3	1164.1
5825	1087.7	50.551	-2.8837	1090.6	1064.9
5826	979.42	48.305	-2.8857	982.31	957.74
5827	867.79	42.871	-2.8879	870.68	848.72
5828	756.48	35.501	-2.8900	759.37	740.92
5829	647.27	27.321	-2.8921	650.16	635.59
5830	540.92	18.980	-2.8942	543.81	533.21
5831	437.90	10.612	-2.8962	440.79	434.20
5832	338.75	1.8290	-2.8982	341.65	339.31
5833	244.68	-2.9000	-8.5692	253.25	250.46
5834	158.79	-2.9019	-23.796	182.59	173.09
5835	89.357	-2.9037	-52.224	141.58	124.48
5836	47.269	-2.9055	-104.86	152.13	134.27
5837	27.214	-2.9072	-176.51	203.73	190.46
5838	16.956	-2.9088	-255.03	271.99	262.62
5839	10.778	-2.9105	-334.79	345.57	338.93
5840	6.5747	-2.9120	-413.76	420.33	415.67
5841	3.4801	-2.9135	-491.15	494.63	491.46
5842	1.0764	-2.9150	-566.59	567.67	565.68
5843	-0.86226	-2.9164	-639.93	639.07	638.04
5844	-2.4709	-2.9178	-711.07	708.60	708.38
5845	-2.9191	-3.8356	-779.98	777.06	776.60
5846	-2.9204	-5.0140	-846.63	843.71	842.67
5847	-2.9216	-6.0466	-911.04	908.12	906.56
5848	-2.9228	-6.9625	-973.21	970.29	968.28
5849	-2.9240	-7.7829	-1033.2	1030.2	1027.8
5850	-2.9251	-8.5241	-1090.9	1088.0	1085.2
5851	-2.9261	-9.1980	-1146.5	1143.5	1140.4
5852	-2.9272	-9.8141	-1199.9	1196.9	1193.5

1

```
***** ANSYS - ENGINEERING ANALYSIS SYSTEM  RELEASE 5.7.1   *****
ANSYS/Mechanical U
00251976          VERSION=INTEL NT      11:31:49  DEC 23, 2005 CP=   1166.047

 Point Beach Strainer Inner Rim Plate Analysis


 ***** POST1 NODAL STRESS LISTING *****

 LOAD STEP=     4  SUBSTEP=    15
  TIME=    4.0000      LOAD CASE=   0
 SHELL NODAL RESULTS ARE AT BOTTOM
```

NODE	S1	S2	S3	SINT	SEQV
5853	-2.9281	-10.380	-1251.1	1248.2	1244.5
5854	-2.9291	-10.901	-1300.3	1297.4	1293.4
5855	-2.9300	-11.381	-1347.4	1344.5	1340.3
5856	-2.9308	-11.826	-1392.4	1389.5	1385.1
5857	-2.9317	-12.236	-1435.4	1432.5	1427.9
5858	-2.9324	-12.616	-1476.5	1473.5	1468.7
5859	-2.9332	-12.967	-1515.5	1512.6	1507.6
5860	-2.9339	-13.291	-1552.7	1549.7	1544.6
5861	-2.9346	-13.590	-1587.9	1584.9	1579.6
5862	-2.9352	-13.864	-1621.2	1618.3	1612.8
5863	-2.9358	-14.116	-1652.7	1649.8	1644.2
5864	-2.9364	-14.345	-1682.4	1679.4	1673.8
5865	-2.9369	-14.554	-1710.2	1707.3	1701.5
5866	-2.9374	-14.743	-1736.4	1733.4	1727.5
5867	-2.9379	-14.912	-1760.7	1757.8	1751.8
5868	-2.9383	-15.063	-1783.4	1780.5	1774.4
5869	-2.9387	-15.195	-1804.4	1801.4	1795.3
5870	-2.9391	-15.311	-1823.7	1820.8	1814.6
5871	-2.9394	-15.410	-1841.4	1838.5	1832.3
5872	-2.9397	-15.493	-1857.5	1854.6	1848.3
5873	-2.9400	-15.561	-1872.0	1869.1	1862.8
5874	-2.9402	-15.613	-1885.0	1882.1	1875.8
5875	-2.9404	-15.651	-1896.5	1893.5	1887.2
5876	-2.9406	-15.675	-1906.4	1903.5	1897.2
5877	-2.9408	-15.685	-1914.9	1912.0	1905.6
5878	-2.9409	-15.682	-1922.0	1919.0	1912.7
5879	-2.9410	-15.666	-1927.6	1924.6	1918.3
5880	-2.9411	-15.638	-1931.8	1928.8	1922.5
5881	-2.9412	-15.597	-1934.6	1931.7	1925.4
5882	-2.9412	-15.545	-1936.1	1933.1	1926.9
5883	-2.9412	-15.481	-1936.2	1933.3	1927.1
5884	-2.9412	-15.406	-1935.1	1932.1	1925.9
5885	-2.9411	-15.320	-1932.6	1929.7	1923.5
5886	-2.9411	-15.223	-1928.9	1926.0	1919.8
5887	-2.9410	-15.116	-1923.9	1921.0	1914.9
5888	-2.9409	-14.999	-1917.7	1914.8	1908.8
5889	-2.9407	-14.872	-1910.3	1907.4	1901.5
5890	-2.9406	-14.735	-1901.7	1898.8	1892.9

1

```
***** ANSYS - ENGINEERING ANALYSIS SYSTEM  RELEASE 5.7.1   *****
ANSYS/Mechanical U
00251976          VERSION=INTEL NT      11:31:49  DEC 23, 2005 CP=   1166.047

 Point Beach Strainer Inner Rim Plate Analysis


 ***** POST1 NODAL STRESS LISTING *****

 LOAD STEP=     4  SUBSTEP=    15
  TIME=    4.0000      LOAD CASE=   0
 SHELL NODAL RESULTS ARE AT BOTTOM
```

NODE	S1	S2	S3	SINT	SEQV
5891	-2.9404	-14.589	-1892.0	1889.0	1883.3
5892	-2.9402	-14.433	-1881.1	1878.1	1872.4
5893	-2.9399	-14.268	-1869.0	1866.1	1860.5
5894	-2.9397	-14.094	-1855.9	1852.9	1847.4
5895	-2.9394	-13.912	-1841.6	1838.7	1833.2
5896	-2.9391	-13.720	-1826.3	1823.3	1818.0
5897	-2.9388	-13.521	-1809.8	1806.9	1801.6
5898	-2.9385	-13.313	-1792.4	1789.4	1784.3
5899	-2.9381	-13.096	-1773.9	1770.9	1765.9
5900	-2.9377	-12.871	-1754.3	1751.4	1746.5
5901	-2.9373	-12.639	-1733.8	1730.9	1726.0
5902	-2.9369	-12.398	-1712.2	1709.3	1704.6
5903	-2.9365	-12.149	-1689.7	1686.8	1682.2
5904	-2.9361	-11.892	-1666.2	1663.3	1658.8
5905	-2.9356	-11.627	-1641.7	1638.8	1634.5
5906	-2.9351	-11.354	-1616.3	1613.3	1609.2
5907	-2.9346	-11.073	-1589.9	1587.0	1582.9
5908	-2.9341	-10.784	-1562.6	1559.7	1555.7
5909	-2.9335	-10.486	-1534.4	1531.4	1527.7
5910	-2.9330	-10.180	-1505.2	1502.3	1498.6
5911	-2.9324	-9.8641	-1475.1	1472.2	1468.7
5912	-2.9318	-9.5391	-1444.1	1441.2	1437.9
5913	-2.9312	-9.2040	-1412.3	1409.3	1406.2
5914	-2.9306	-8.8583	-1379.5	1376.6	1373.6
5915	-2.9300	-8.5012	-1345.8	1342.9	1340.1
5916	-2.9293	-8.1316	-1311.3	1308.4	1305.8
5917	1264.9	134.42	-2.8803	1267.7	1205.0
5918	1167.4	138.74	-2.8821	1170.3	1106.3
5919	1049.9	131.60	-2.8844	1052.8	992.37
5920	930.31	116.62	-2.8866	933.19	879.55
5921	814.56	98.881	-2.8888	817.45	771.62
5922	703.22	81.582	-2.8910	706.11	667.89
5923	595.74	65.945	-2.8930	598.63	567.35
5924	491.69	52.158	-2.8950	494.58	469.49
5925	390.91	39.979	-2.8970	393.81	374.22
5926	293.55	28.884	-2.8989	296.45	281.90
5927	200.36	17.776	-2.9007	203.26	193.75
5928	114.52	3.1810	-2.9027	117.42	114.50

1

```
***** ANSYS - ENGINEERING ANALYSIS SYSTEM  RELEASE 5.7.1   *****
ANSYS/Mechanical U
00251976          VERSION=INTEL NT      11:31:49  DEC 23, 2005 CP=   1166.047

 Point Beach Strainer Inner Rim Plate Analysis


 ***** POST1 NODAL STRESS LISTING *****

 LOAD STEP=     4  SUBSTEP=    15
  TIME=    4.0000      LOAD CASE=   0
 SHELL NODAL RESULTS ARE AT BOTTOM
```

NODE	S1	S2	S3	SINT	SEQV
5929	50.739	-2.9041	-29.858	80.597	71.063
5930	24.559	-2.9059	-97.104	121.66	110.52
5931	14.029	-2.9075	-176.79	190.82	182.94
5932	7.6774	-2.9091	-257.59	265.26	260.13
5933	2.9972	-2.9107	-337.13	340.13	337.21
5934	-0.77480	-2.9122	-414.76	413.99	412.92
5935	-2.9136	-3.9610	-490.25	487.34	486.82
5936	-2.9150	-6.7316	-563.52	560.60	558.71
5937	-2.9164	-9.1890	-634.53	631.61	628.50
5938	-2.9177	-11.402	-703.27	700.35	696.15
5939	-2.9190	-13.416	-769.75	766.83	761.64
5940	-2.9202	-15.268	-833.99	831.07	824.97
5941	-2.9214	-16.982	-896.02	893.10	886.15
5942	-2.9225	-18.579	-955.85	952.93	945.19
5943	-2.9236	-20.072	-1013.5	1010.6	1002.1
5944	-2.9247	-21.473	-1069.0	1066.1	1056.9
5945	-2.9257	-22.791	-1122.4	1119.5	1109.7
5946	-2.9267	-24.034	-1173.7	1170.8	1160.4
5947	-2.9276	-25.206	-1223.0	1220.0	1209.1
5948	-2.9285	-26.313	-1270.2	1267.3	1255.7
5949	-2.9294	-27.358	-1315.4	1312.5	1300.4
5950	-2.9302	-28.345	-1358.6	1355.7	1343.2
5951	-2.9310	-29.275	-1399.9	1397.0	1384.0
5952	-2.9317	-30.151	-1439.3	1436.3	1422.9
5953	-2.9325	-30.975	-1476.8	1473.8	1460.0
5954	-2.9331	-31.749	-1512.4	1509.4	1495.2
5955	-2.9338	-32.474	-1546.2	1543.2	1528.7
5956	-2.9344	-33.151	-1578.1	1575.2	1560.3
5957	-2.9350	-33.782	-1608.4	1605.4	1590.2
5958	-2.9355	-34.367	-1636.8	1633.9	1618.4
5959	-2.9360	-34.909	-1663.5	1660.6	1644.9
5960	-2.9365	-35.407	-1688.6	1685.6	1669.6
5961	-2.9369	-35.864	-1712.0	1709.0	1692.8
5962	-2.9374	-36.280	-1733.7	1730.8	1714.3
5963	-2.9377	-36.655	-1753.8	1750.9	1734.3
5964	-2.9381	-36.991	-1772.3	1769.4	1752.6
5965	-2.9384	-37.289	-1789.3	1786.4	1769.5
5966	-2.9387	-37.549	-1804.8	1801.8	1784.8

1

```
***** ANSYS - ENGINEERING ANALYSIS SYSTEM  RELEASE 5.7.1   *****
ANSYS/Mechanical U
00251976          VERSION=INTEL NT      11:31:49  DEC 23, 2005 CP=   1166.078

 Point Beach Strainer Inner Rim Plate Analysis


 ***** POST1 NODAL STRESS LISTING *****

 LOAD STEP=     4  SUBSTEP=    15
  TIME=    4.0000      LOAD CASE=   0
 SHELL NODAL RESULTS ARE AT BOTTOM
```

NODE	S1	S2	S3	SINT	SEQV
5967	-2.9390	-37.773	-1818.7	1815.7	1798.6
5968	-2.9392	-37.961	-1831.1	1828.2	1810.9
5969	-2.9394	-38.113	-1842.1	1839.2	1821.8
5970	-2.9396	-38.231	-1851.6	1848.7	1831.3
5971	-2.9398	-38.316	-1859.8	1856.8	1839.4
5972	-2.9399	-38.367	-1866.5	1863.6	1846.1
5973	-2.9400	-38.387	-1871.9	1868.9	1851.5
5974	-2.9401	-38.374	-1875.9	1873.0	1855.5
5975	-2.9401	-38.331	-1878.6	1875.7	1858.2
5976	-2.9401	-38.257	-1880.0	1877.1	1859.7
5977	-2.9401	-38.154	-1880.2	1877.2	1859.9
5978	-2.9401	-38.022	-1879.1	1876.1	1858.8
5979	-2.9401	-37.861	-1876.7	1873.8	1856.5
5980	-2.9400	-37.672	-1873.1	1870.2	1853.1
5981	-2.9399	-37.456	-1868.4	1865.4	1848.4
5982	-2.9398	-37.213	-1862.4	1859.5	1842.6
5983	-2.9397	-36.944	-1855.3	1852.4	1835.6
5984	-2.9395	-36.648	-1847.1	1844.1	1827.5
5985	-2.9393	-36.328	-1837.7	1834.8	1818.3
5986	-2.9391	-35.982	-1827.2	1824.3	1808.0
5987	-2.9389	-35.612	-1815.7	1812.7	1796.6
5988	-2.9387	-35.218	-1803.1	1800.1	1784.2
5989	-2.9384	-34.801	-1789.4	1786.4	1770.7
5990	-2.9381	-34.360	-1774.7	1771.7	1756.2
5991	-2.9378	-33.896	-1758.9	1756.0	1740.7
5992	-2.9375	-33.410	-1742.2	1739.2	1724.2
5993	-2.9372	-32.902	-1724.4	1721.5	1706.7
5994	-2.9368	-32.372	-1705.7	1702.7	1688.2
5995	-2.9364	-31.821	-1686.0	1683.0	1668.8
5996	-2.9360	-31.248	-1665.3	1662.4	1648.4
5997	-2.9356	-30.655	-1643.7	1640.8	1627.1
5998	-2.9352	-30.040	-1621.2	1618.2	1604.8
5999	-2.9348	-29.406	-1597.7	1594.7	1581.7
6000	-2.9343	-28.751	-1573.3	1570.4	1557.6
6001	-2.9338	-28.075	-1548.0	1545.1	1532.6
6002	-2.9333	-27.379	-1521.8	1518.9	1506.8
6003	-2.9328	-26.663	-1494.7	1491.8	1480.1
6004	-2.9323	-25.927	-1466.8	1463.8	1452.5

1

```
***** ANSYS - ENGINEERING ANALYSIS SYSTEM  RELEASE 5.7.1   *****
ANSYS/Mechanical U
00251976          VERSION=INTEL NT      11:31:49  DEC 23, 2005 CP=   1166.078

 Point Beach Strainer Inner Rim Plate Analysis


 ***** POST1 NODAL STRESS LISTING *****

 LOAD STEP=     4  SUBSTEP=    15
  TIME=    4.0000      LOAD CASE=   0
 SHELL NODAL RESULTS ARE AT BOTTOM
```

NODE	S1	S2	S3	SINT	SEQV
6005	-2.9317	-25.170	-1437.9	1435.0	1424.0
6006	-2.9312	-24.392	-1408.2	1405.3	1394.7
6007	-2.9306	-23.593	-1377.6	1374.7	1364.5
6008	-2.9300	-22.772	-1346.2	1343.3	1333.5
6009	-2.9294	-21.928	-1313.9	1311.0	1301.6
6010	-2.9287	-21.061	-1280.8	1277.9	1268.9
6011	1353.2	309.05	-2.8786	1356.1	1230.2
6012	1173.6	278.15	-2.8820	1176.5	1064.1
6013	1025.3	226.58	-2.8848	1028.1	934.78
6014	898.40	181.44	-2.8872	901.29	824.72
6015	782.53	145.95	-2.8894	785.42	722.59
6016	672.71	117.85	-2.8915	675.60	624.05
6017	566.99	95.139	-2.8936	569.89	527.74
6018	464.61	76.532	-2.8955	467.51	433.29
6019	365.22	61.103	-2.8974	368.12	340.66
6020	268.75	48.082	-2.8993	271.65	250.08
6021	175.40	36.625	-2.9011	178.30	162.19
6022	87.039	24.401	-2.9029	89.942	79.871
6023	30.784	-2.9042	-16.066	46.851	41.852
6024	18.677	-2.9061	-97.108	115.78	106.64
6025	11.766	-2.9077	-180.01	191.77	184.87
6026	6.2067	-2.9093	-261.10	267.31	262.87
6027	1.4173	-2.9108	-339.98	341.39	339.25
6028	-2.8231	-2.9123	-416.53	413.71	413.66
6029	-2.9137	-6.6398	-490.76	487.84	485.99
6030	-2.9150	-10.116	-562.66	559.74	556.18
6031	-2.9164	-13.311	-632.26	629.34	624.21
6032	-2.9177	-16.271	-699.58	696.66	690.08
6033	-2.9189	-19.031	-764.64	761.73	753.80
6034	-2.9201	-21.616	-827.49	824.57	815.38
6035	-2.9212	-24.048	-888.14	885.22	874.85
6036	-2.9224	-26.344	-946.62	943.70	932.21
6037	-2.9234	-28.515	-1003.0	1000.0	987.50
6038	-2.9245	-30.573	-1057.2	1054.3	1040.7
6039	-2.9255	-32.526	-1109.4	1106.5	1092.0
6040	-2.9264	-34.379	-1159.5	1156.6	1141.2
6041	-2.9273	-36.140	-1207.6	1204.7	1188.4
6042	-2.9282	-37.811	-1253.7	1250.8	1233.7

1

```
***** ANSYS - ENGINEERING ANALYSIS SYSTEM  RELEASE 5.7.1   *****
ANSYS/Mechanical U
00251976          VERSION=INTEL NT      11:31:49  DEC 23, 2005 CP=   1166.078

 Point Beach Strainer Inner Rim Plate Analysis


 ***** POST1 NODAL STRESS LISTING *****

 LOAD STEP=     4  SUBSTEP=    15
  TIME=    4.0000      LOAD CASE=   0
 SHELL NODAL RESULTS ARE AT BOTTOM
```

NODE	S1	S2	S3	SINT	SEQV
6043	-2.9291	-39.397	-1297.8	1294.9	1277.1
6044	-2.9299	-40.902	-1340.0	1337.1	1318.5
6045	-2.9306	-42.327	-1380.4	1377.4	1358.2
6046	-2.9314	-43.675	-1418.8	1415.9	1395.9
6047	-2.9321	-44.948	-1455.4	1452.4	1431.9
6048	-2.9327	-46.148	-1490.1	1487.2	1466.1
6049	-2.9333	-47.277	-1523.1	1520.2	1498.5
6050	-2.9339	-48.336	-1554.3	1551.4	1529.2
6051	-2.9345	-49.327	-1583.8	1580.9	1558.2
6052	-2.9350	-50.251	-1611.6	1608.6	1585.5
6053	-2.9355	-51.110	-1637.7	1634.7	1611.2
6054	-2.9360	-51.904	-1662.1	1659.2	1635.2
6055	-2.9364	-52.636	-1684.9	1682.0	1657.7
6056	-2.9368	-53.307	-1706.1	1703.2	1678.6
6057	-2.9372	-53.917	-1725.8	1722.8	1697.9
6058	-2.9375	-54.467	-1743.8	1740.9	1715.7
6059	-2.9379	-54.960	-1760.4	1757.5	1732.0
6060	-2.9381	-55.396	-1775.4	1772.5	1746.9
6061	-2.9384	-55.776	-1789.0	1786.1	1760.3
6062	-2.9386	-56.102	-1801.2	1798.2	1772.2
6063	-2.9388	-56.374	-1811.9	1808.9	1782.8
6064	-2.9390	-56.593	-1821.2	1818.2	1792.0
6065	-2.9392	-56.760	-1829.1	1826.2	1799.9
6066	-2.9393	-56.877	-1835.7	1832.7	1806.4
6067	-2.9394	-56.944	-1840.9	1838.0	1811.6
6068	-2.9395	-56.963	-1844.8	1841.9	1815.5
6069	-2.9395	-56.934	-1847.5	1844.5	1818.1
6070	-2.9395	-56.858	-1848.9	1845.9	1819.6
6071	-2.9395	-56.736	-1849.0	1846.0	1819.7
6072	-2.9395	-56.569	-1847.9	1844.9	1818.7
6073	-2.9395	-56.357	-1845.6	1842.6	1816.5
6074	-2.9394	-56.102	-1842.1	1839.1	1813.1
6075	-2.9393	-55.805	-1837.4	1834.5	1808.6
6076	-2.9392	-55.466	-1831.6	1828.7	1803.0
6077	-2.9391	-55.086	-1824.7	1821.7	1796.2
6078	-2.9389	-54.665	-1816.6	1813.7	1788.4
6079	-2.9388	-54.205	-1807.5	1804.6	1779.5
6080	-2.9386	-53.706	-1797.3	1794.3	1769.5

1

```
***** ANSYS - ENGINEERING ANALYSIS SYSTEM  RELEASE 5.7.1   *****
ANSYS/Mechanical U
00251976          VERSION=INTEL NT      11:31:49  DEC 23, 2005 CP=   1166.094

 Point Beach Strainer Inner Rim Plate Analysis


 ***** POST1 NODAL STRESS LISTING *****

 LOAD STEP=     4  SUBSTEP=    15
  TIME=    4.0000      LOAD CASE=   0
 SHELL NODAL RESULTS ARE AT BOTTOM
```

NODE	S1	S2	S3	SINT	SEQV
6081	-2.9383	-53.168	-1786.0	1783.1	1758.5
6082	-2.9381	-52.593	-1773.7	1770.7	1746.4
6083	-2.9379	-51.981	-1760.3	1757.4	1733.4
6084	-2.9376	-51.333	-1746.0	1743.0	1719.3
6085	-2.9373	-50.649	-1730.6	1727.6	1704.3
6086	-2.9370	-49.930	-1714.2	1711.3	1688.3
6087	-2.9367	-49.176	-1696.9	1694.0	1671.3
6088	-2.9363	-48.389	-1678.6	1675.7	1653.4
6089	-2.9359	-47.567	-1659.4	1656.4	1634.6
6090	-2.9356	-46.712	-1639.2	1636.3	1614.8
6091	-2.9352	-45.825	-1618.1	1615.2	1594.2
6092	-2.9347	-44.905	-1596.1	1593.2	1572.6
6093	-2.9343	-43.953	-1573.2	1570.3	1550.2
6094	-2.9338	-42.969	-1549.4	1546.5	1526.8
6095	-2.9334	-41.954	-1524.7	1521.8	1502.6
6096	-2.9329	-40.908	-1499.1	1496.2	1477.6
6097	-2.9324	-39.830	-1472.7	1469.8	1451.7
6098	-2.9319	-38.721	-1445.4	1442.5	1424.9
6099	-2.9313	-37.581	-1417.2	1414.3	1397.3
6100	-2.9308	-36.409	-1388.2	1385.3	1368.9
6101	-2.9302	-35.205	-1358.4	1355.5	1339.6
6102	-2.9296	-33.969	-1327.7	1324.8	1309.6
6103	-2.9290	-32.699	-1296.2	1293.3	1278.7
6104	-2.9284	-31.395	-1263.9	1261.0	1247.0
6105	1341.5	520.14	-2.8788	1344.3	1173.8
6106	1148.7	346.94	-2.8825	1151.5	1022.5
6107	1008.9	261.34	-2.8851	1011.8	908.98
6108	886.00	205.80	-2.8875	888.89	805.09
6109	771.54	164.04	-2.8897	774.43	705.93
6110	662.63	131.47	-2.8917	665.52	609.55
6111	557.70	105.78	-2.8937	560.60	514.93
6112	455.97	85.250	-2.8957	458.87	421.76
6113	357.08	68.593	-2.8976	359.98	330.09
6114	260.87	54.881	-2.8994	263.77	240.15
6115	167.27	43.440	-2.9012	170.17	152.38
6116	76.245	33.768	-2.9030	79.148	68.606
6117	25.498	-2.9041	-12.236	37.735	34.042
6118	18.325	-2.9062	-98.185	116.51	107.48

1

```
***** ANSYS - ENGINEERING ANALYSIS SYSTEM  RELEASE 5.7.1   *****
ANSYS/Mechanical U
00251976          VERSION=INTEL NT      11:31:49  DEC 23, 2005 CP=   1166.109

 Point Beach Strainer Inner Rim Plate Analysis


 ***** POST1 NODAL STRESS LISTING *****

 LOAD STEP=     4  SUBSTEP=    15
  TIME=    4.0000      LOAD CASE=   0
 SHELL NODAL RESULTS ARE AT BOTTOM
```

NODE	S1	S2	S3	SINT	SEQV
6119	12.037	-2.9078	-181.64	193.68	186.65
6120	6.4619	-2.9093	-262.63	269.09	264.53
6121	1.4656	-2.9108	-341.18	342.65	340.48
6122	-2.9123	-3.0556	-417.33	414.42	414.35
6123	-2.9137	-7.1839	-491.11	488.19	486.07
6124	-2.9150	-10.983	-562.54	559.62	555.63
6125	-2.9164	-14.503	-631.66	628.75	623.04
6126	-2.9176	-17.784	-698.51	695.59	688.28
6127	-2.9189	-20.858	-763.11	760.19	751.39
6128	-2.9201	-23.749	-825.50	822.58	812.37
6129	-2.9212	-26.477	-885.70	882.78	871.24
6130	-2.9223	-29.058	-943.75	940.82	928.03
6131	-2.9234	-31.505	-999.67	996.75	982.77
6132	-2.9244	-33.828	-1053.5	1050.6	1035.5
6133	-2.9254	-36.035	-1105.3	1102.3	1086.2
6134	-2.9263	-38.133	-1155.0	1152.1	1134.9
6135	-2.9272	-40.127	-1202.7	1199.8	1181.6
6136	-2.9281	-42.022	-1248.5	1245.5	1226.5
6137	-2.9289	-43.822	-1292.3	1289.3	1269.4
6138	-2.9297	-45.531	-1334.1	1331.2	1310.4
6139	-2.9305	-47.150	-1374.1	1371.2	1349.6
6140	-2.9312	-48.683	-1412.3	1409.3	1387.0
6141	-2.9319	-50.133	-1448.6	1445.6	1422.6
6142	-2.9326	-51.500	-1483.1	1480.1	1456.4
6143	-2.9332	-52.787	-1515.8	1512.8	1488.5
6144	-2.9338	-53.996	-1546.7	1543.8	1518.9
6145	-2.9343	-55.128	-1576.0	1573.1	1547.6
6146	-2.9349	-56.184	-1603.5	1600.6	1574.6
6147	-2.9354	-57.168	-1629.4	1626.5	1600.1
6148	-2.9358	-58.079	-1653.7	1650.7	1623.8
6149	-2.9363	-58.919	-1676.3	1673.3	1646.1
6150	-2.9367	-59.689	-1697.3	1694.4	1666.7
6151	-2.9370	-60.392	-1716.8	1713.9	1685.9
6152	-2.9374	-61.028	-1734.7	1731.8	1703.5
6153	-2.9377	-61.598	-1751.1	1748.2	1719.6
6154	-2.9380	-62.103	-1766.1	1763.1	1734.3
6155	-2.9382	-62.546	-1779.6	1776.6	1747.6
6156	-2.9385	-62.927	-1791.6	1788.7	1759.4

1

```
***** ANSYS - ENGINEERING ANALYSIS SYSTEM  RELEASE 5.7.1   *****
ANSYS/Mechanical U
00251976          VERSION=INTEL NT      11:31:49  DEC 23, 2005 CP=   1166.125

 Point Beach Strainer Inner Rim Plate Analysis


 ***** POST1 NODAL STRESS LISTING *****

 LOAD STEP=     4  SUBSTEP=    15
  TIME=    4.0000      LOAD CASE=   0
 SHELL NODAL RESULTS ARE AT BOTTOM
```

NODE	S1	S2	S3	SINT	SEQV
6157	-2.9387	-63.246	-1802.2	1799.3	1769.9
6158	-2.9388	-63.506	-1811.4	1808.5	1779.0
6159	-2.9390	-63.708	-1819.3	1816.4	1786.8
6160	-2.9391	-63.852	-1825.8	1822.9	1793.2
6161	-2.9392	-63.940	-1831.0	1828.1	1798.4
6162	-2.9393	-63.972	-1834.9	1832.0	1802.2
6163	-2.9393	-63.951	-1837.5	1834.6	1804.9
6164	-2.9394	-63.875	-1838.9	1835.9	1806.2
6165	-2.9394	-63.748	-1839.0	1836.1	1806.4
6166	-2.9393	-63.570	-1837.9	1835.0	1805.4
6167	-2.9393	-63.341	-1835.6	1832.7	1803.2
6168	-2.9392	-63.062	-1832.2	1829.2	1799.9
6169	-2.9391	-62.735	-1827.5	1824.6	1795.4
6170	-2.9390	-62.361	-1821.8	1818.8	1789.9
6171	-2.9389	-61.939	-1814.9	1811.9	1783.2
6172	-2.9387	-61.472	-1806.9	1804.0	1775.4
6173	-2.9386	-60.960	-1797.8	1794.9	1766.6
6174	-2.9384	-60.403	-1787.7	1784.8	1756.7
6175	-2.9382	-59.802	-1776.5	1773.6	1745.8
6176	-2.9379	-59.159	-1764.3	1761.3	1733.9
6177	-2.9377	-58.474	-1751.0	1748.1	1721.0
6178	-2.9374	-57.747	-1736.8	1733.8	1707.1
6179	-2.9371	-56.980	-1721.5	1718.6	1692.2
6180	-2.9368	-56.172	-1705.3	1702.4	1676.4
6181	-2.9365	-55.325	-1688.1	1685.2	1659.6
6182	-2.9361	-54.439	-1670.0	1667.0	1641.9
6183	-2.9358	-53.514	-1650.9	1647.9	1623.2
6184	-2.9354	-52.552	-1630.9	1627.9	1603.7
6185	-2.9350	-51.552	-1609.9	1607.0	1583.2
6186	-2.9346	-50.515	-1588.1	1585.2	1561.9
6187	-2.9341	-49.441	-1565.4	1562.4	1539.7
6188	-2.9337	-48.332	-1541.7	1538.8	1516.6
6189	-2.9332	-47.186	-1517.2	1514.3	1492.7
6190	-2.9327	-46.005	-1491.9	1488.9	1467.9
6191	-2.9322	-44.788	-1465.7	1462.7	1442.3
6192	-2.9317	-43.536	-1438.6	1435.6	1415.8
6193	-2.9312	-42.248	-1410.6	1407.7	1388.5
6194	-2.9307	-40.925	-1381.9	1378.9	1360.3

1

```
***** ANSYS - ENGINEERING ANALYSIS SYSTEM  RELEASE 5.7.1   *****
ANSYS/Mechanical U
00251976          VERSION=INTEL NT      11:31:49  DEC 23, 2005 CP=   1166.125

 Point Beach Strainer Inner Rim Plate Analysis


 ***** POST1 NODAL STRESS LISTING *****

 LOAD STEP=     4  SUBSTEP=    15
  TIME=    4.0000      LOAD CASE=   0
 SHELL NODAL RESULTS ARE AT BOTTOM
```

NODE	S1	S2	S3	SINT	SEQV
6195	-2.9301	-39.565	-1352.3	1349.3	1331.4
6196	-2.9295	-38.169	-1321.8	1318.9	1301.6
6197	-2.9289	-36.735	-1290.6	1287.6	1271.1
6198	-2.9283	-35.263	-1258.5	1255.6	1239.7
6199	1353.8	308.75	-2.8786	1356.7	1230.8
6200	1174.3	277.38	-2.8820	1177.1	1065.0
6201	1025.9	225.43	-2.8848	1028.8	935.73
6202	898.92	180.17	-2.8872	901.81	825.65
6203	782.92	144.73	-2.8894	785.80	723.38
6204	672.95	116.79	-2.8915	675.84	624.66
6205	567.12	94.278	-2.8936	570.02	528.18
6206	464.65	75.877	-2.8955	467.55	433.56
6207	365.22	60.633	-2.8974	368.12	340.82
6208	268.74	47.754	-2.8993	271.64	250.19
6209	175.45	36.366	-2.9011	178.35	162.32
6210	87.336	23.999	-2.9029	90.239	80.245
6211	31.419	-2.9042	-16.721	48.140	42.933
6212	19.061	-2.9061	-97.449	116.51	107.23
6213	12.086	-2.9077	-180.24	192.32	185.28
6214	6.4913	-2.9093	-261.27	267.77	263.19
6215	1.6711	-2.9108	-340.10	341.78	339.51
6216	-2.6013	-2.9123	-416.63	414.03	413.87
6217	-2.9137	-6.4509	-490.82	487.91	486.15
6218	-2.9150	-9.9599	-562.70	559.79	556.30
6219	-2.9164	-13.187	-632.29	629.37	624.30
6220	-2.9177	-16.177	-699.59	696.68	690.14
6221	-2.9189	-18.963	-764.65	761.73	753.84
6222	-2.9201	-21.572	-827.49	824.57	815.40
6223	-2.9212	-24.024	-888.13	885.21	874.85
6224	-2.9224	-26.335	-946.62	943.69	932.21
6225	-2.9234	-28.520	-1003.0	1000.0	987.49
6226	-2.9245	-30.588	-1057.2	1054.3	1040.7
6227	-2.9255	-32.548	-1109.4	1106.4	1091.9
6228	-2.9264	-34.407	-1159.5	1156.6	1141.1
6229	-2.9273	-36.170	-1207.6	1204.6	1188.4
6230	-2.9282	-37.843	-1253.7	1250.8	1233.7
6231	-2.9291	-39.430	-1297.8	1294.9	1277.0
6232	-2.9299	-40.933	-1340.0	1337.1	1318.5

1

```
***** ANSYS - ENGINEERING ANALYSIS SYSTEM  RELEASE 5.7.1   *****
ANSYS/Mechanical U
00251976          VERSION=INTEL NT      11:31:49  DEC 23, 2005 CP=   1166.141

 Point Beach Strainer Inner Rim Plate Analysis


 ***** POST1 NODAL STRESS LISTING *****

 LOAD STEP=     4  SUBSTEP=    15
  TIME=    4.0000      LOAD CASE=   0
 SHELL NODAL RESULTS ARE AT BOTTOM
```

NODE	S1	S2	S3	SINT	SEQV
6233	-2.9306	-42.356	-1380.4	1377.4	1358.1
6234	-2.9314	-43.702	-1418.8	1415.9	1395.9
6235	-2.9321	-44.973	-1455.4	1452.4	1431.9
6236	-2.9327	-46.170	-1490.1	1487.2	1466.1
6237	-2.9333	-47.296	-1523.1	1520.2	1498.5
6238	-2.9339	-48.353	-1554.3	1551.4	1529.2
6239	-2.9345	-49.341	-1583.8	1580.9	1558.2
6240	-2.9350	-50.263	-1611.6	1608.6	1585.5
6241	-2.9355	-51.119	-1637.7	1634.7	1611.2
6242	-2.9360	-51.912	-1662.1	1659.2	1635.2
6243	-2.9364	-52.642	-1684.9	1682.0	1657.7
6244	-2.9368	-53.311	-1706.1	1703.2	1678.6
6245	-2.9372	-53.919	-1725.8	1722.8	1697.9
6246	-2.9375	-54.469	-1743.8	1740.9	1715.7
6247	-2.9379	-54.961	-1760.4	1757.5	1732.0
6248	-2.9381	-55.396	-1775.4	1772.5	1746.9
6249	-2.9384	-55.776	-1789.0	1786.1	1760.3
6250	-2.9386	-56.101	-1801.2	1798.2	1772.2
6251	-2.9388	-56.372	-1811.9	1808.9	1782.8
6252	-2.9390	-56.591	-1821.2	1818.2	1792.0
6253	-2.9392	-56.758	-1829.1	1826.2	1799.9
6254	-2.9393	-56.875	-1835.7	1832.7	1806.4
6255	-2.9394	-56.942	-1840.9	1838.0	1811.6
6256	-2.9395	-56.961	-1844.8	1841.9	1815.5
6257	-2.9395	-56.932	-1847.5	1844.5	1818.2
6258	-2.9395	-56.856	-1848.9	1845.9	1819.6
6259	-2.9395	-56.734	-1849.0	1846.0	1819.7
6260	-2.9395	-56.567	-1847.9	1844.9	1818.7
6261	-2.9395	-56.356	-1845.6	1842.6	1816.5
6262	-2.9394	-56.102	-1842.1	1839.1	1813.1
6263	-2.9393	-55.805	-1837.4	1834.5	1808.6
6264	-2.9392	-55.466	-1831.6	1828.7	1803.0
6265	-2.9391	-55.086	-1824.7	1821.7	1796.2
6266	-2.9389	-54.665	-1816.6	1813.7	1788.4
6267	-2.9388	-54.205	-1807.5	1804.6	1779.5
6268	-2.9386	-53.706	-1797.3	1794.3	1769.5
6269	-2.9383	-53.169	-1786.0	1783.1	1758.5
6270	-2.9381	-52.594	-1773.7	1770.7	1746.4

1

```
***** ANSYS - ENGINEERING ANALYSIS SYSTEM  RELEASE 5.7.1   *****
ANSYS/Mechanical U
00251976          VERSION=INTEL NT      11:31:49  DEC 23, 2005 CP=   1166.156

 Point Beach Strainer Inner Rim Plate Analysis


 ***** POST1 NODAL STRESS LISTING *****

 LOAD STEP=     4  SUBSTEP=    15
  TIME=    4.0000      LOAD CASE=   0
 SHELL NODAL RESULTS ARE AT BOTTOM
```

NODE	S1	S2	S3	SINT	SEQV
6271	-2.9379	-51.983	-1760.3	1757.4	1733.4
6272	-2.9376	-51.335	-1745.9	1743.0	1719.3
6273	-2.9373	-50.651	-1730.6	1727.6	1704.3
6274	-2.9370	-49.932	-1714.2	1711.3	1688.3
6275	-2.9367	-49.178	-1696.9	1694.0	1671.3
6276	-2.9363	-48.390	-1678.6	1675.7	1653.4
6277	-2.9359	-47.569	-1659.4	1656.4	1634.6
6278	-2.9356	-46.714	-1639.2	1636.3	1614.8
6279	-2.9352	-45.826	-1618.1	1615.2	1594.2
6280	-2.9347	-44.906	-1596.1	1593.2	1572.6
6281	-2.9343	-43.954	-1573.2	1570.3	1550.2
6282	-2.9338	-42.970	-1549.4	1546.5	1526.8
6283	-2.9334	-41.955	-1524.7	1521.8	1502.6
6284	-2.9329	-40.908	-1499.1	1496.2	1477.6
6285	-2.9324	-39.829	-1472.7	1469.8	1451.7
6286	-2.9319	-38.720	-1445.4	1442.5	1424.9
6287	-2.9313	-37.579	-1417.2	1414.3	1397.3
6288	-2.9308	-36.407	-1388.2	1385.3	1368.9
6289	-2.9302	-35.203	-1358.4	1355.5	1339.6
6290	-2.9296	-33.967	-1327.7	1324.8	1309.6
6291	-2.9290	-32.697	-1296.2	1293.3	1278.7
6292	-2.9284	-31.394	-1263.9	1261.0	1247.0
6293	1265.6	134.56	-2.8803	1268.5	1205.7
6294	1168.3	137.26	-2.8821	1171.2	1107.8
6295	1050.9	129.40	-2.8843	1053.8	994.30
6296	931.14	114.23	-2.8866	934.02	881.32
6297	815.08	96.617	-2.8888	817.97	773.03
6298	703.46	79.620	-2.8910	706.35	668.92
6299	595.77	64.357	-2.8930	598.66	568.03
6300	491.59	50.949	-2.8950	494.48	469.88
6301	390.76	39.109	-2.8970	393.66	374.42
6302	293.42	28.280	-2.8989	296.32	282.02
6303	200.33	17.326	-2.9007	203.23	193.91
6304	114.76	2.6906	-2.9027	117.66	114.97
6305	51.394	-2.9042	-30.584	81.978	72.231
6306	25.213	-2.9059	-97.693	122.91	111.54
6307	14.601	-2.9075	-177.20	191.80	183.67
6308	8.1903	-2.9091	-257.88	266.07	260.70

1

```
***** ANSYS - ENGINEERING ANALYSIS SYSTEM  RELEASE 5.7.1   *****
ANSYS/Mechanical U
00251976          VERSION=INTEL NT      11:31:49  DEC 23, 2005 CP=   1166.172

 Point Beach Strainer Inner Rim Plate Analysis


 ***** POST1 NODAL STRESS LISTING *****

 LOAD STEP=     4  SUBSTEP=    15
  TIME=    4.0000      LOAD CASE=   0
 SHELL NODAL RESULTS ARE AT BOTTOM
```

NODE	S1	S2	S3	SINT	SEQV
6309	3.4555	-2.9107	-337.34	340.79	337.66
6310	-0.37312	-2.9122	-414.90	414.53	413.27
6311	-2.9136	-3.6178	-490.35	487.43	487.08
6312	-2.9150	-6.4467	-563.57	560.66	558.90
6313	-2.9164	-8.9603	-634.55	631.63	628.63
6314	-2.9177	-11.225	-703.27	700.35	696.23
6315	-2.9190	-13.287	-769.74	766.82	761.69
6316	-2.9202	-15.181	-833.97	831.05	824.99
6317	-2.9214	-16.930	-895.99	893.07	886.15
6318	-2.9225	-18.556	-955.82	952.89	945.17
6319	-2.9236	-20.072	-1013.5	1010.5	1002.1
6320	-2.9247	-21.492	-1069.0	1066.1	1056.9
6321	-2.9257	-22.824	-1122.4	1119.5	1109.6
6322	-2.9267	-24.077	-1173.7	1170.8	1160.3
6323	-2.9276	-25.255	-1222.9	1220.0	1209.0
6324	-2.9285	-26.366	-1270.2	1267.2	1255.7
6325	-2.9294	-27.412	-1315.4	1312.4	1300.4
6326	-2.9302	-28.397	-1358.6	1355.7	1343.1
6327	-2.9310	-29.325	-1399.9	1397.0	1384.0
6328	-2.9317	-30.198	-1439.3	1436.3	1422.9
6329	-2.9325	-31.018	-1476.8	1473.8	1460.0
6330	-2.9331	-31.788	-1512.4	1509.4	1495.2
6331	-2.9338	-32.508	-1546.2	1543.2	1528.7
6332	-2.9344	-33.180	-1578.1	1575.2	1560.3
6333	-2.9350	-33.807	-1608.4	1605.4	1590.2
6334	-2.9355	-34.388	-1636.8	1633.9	1618.4
6335	-2.9360	-34.926	-1663.5	1660.6	1644.8
6336	-2.9365	-35.421	-1688.6	1685.6	1669.6
6337	-2.9369	-35.874	-1712.0	1709.0	1692.8
6338	-2.9374	-36.287	-1733.7	1730.8	1714.3
6339	-2.9377	-36.660	-1753.8	1750.9	1734.3
6340	-2.9381	-36.994	-1772.3	1769.4	1752.6
6341	-2.9384	-37.291	-1789.3	1786.4	1769.5
6342	-2.9387	-37.549	-1804.8	1801.8	1784.8
6343	-2.9390	-37.772	-1818.7	1815.7	1798.6
6344	-2.9392	-37.959	-1831.1	1828.2	1810.9
6345	-2.9394	-38.111	-1842.1	1839.2	1821.8
6346	-2.9396	-38.228	-1851.6	1848.7	1831.3

1

***** ANSYS - ENGINEERING ANALYSIS SYSTEM RELEASE 5.7.1 *****
ANSYS/Mechanical U
00251976 VERSION=INTEL NT 11:31:49 DEC 23, 2005 CP= 1166.188

Point Beach Strainer Inner Rim Plate Analysis

***** POST1 NODAL STRESS LISTING *****

LOAD STEP= 4 SUBSTEP= 15
TIME= 4.0000 LOAD CASE= 0
SHELL NODAL RESULTS ARE AT BOTTOM

NODE	S1	S2	S3	SINT	SEQV
6347	-2.9398	-38.313	-1859.8	1856.8	1839.4
6348	-2.9399	-38.364	-1866.5	1863.6	1846.1
6349	-2.9400	-38.383	-1871.9	1868.9	1851.5
6350	-2.9401	-38.371	-1875.9	1873.0	1855.5
6351	-2.9401	-38.328	-1878.6	1875.7	1858.2
6352	-2.9401	-38.255	-1880.0	1877.1	1859.7
6353	-2.9401	-38.152	-1880.2	1877.2	1859.9
6354	-2.9401	-38.020	-1879.1	1876.1	1858.8
6355	-2.9401	-37.859	-1876.7	1873.8	1856.5
6356	-2.9400	-37.671	-1873.1	1870.2	1853.1
6357	-2.9399	-37.455	-1868.4	1865.4	1848.4
6358	-2.9398	-37.212	-1862.4	1859.5	1842.6
6359	-2.9397	-36.943	-1855.3	1852.4	1835.6
6360	-2.9395	-36.649	-1847.1	1844.1	1827.5
6361	-2.9393	-36.328	-1837.7	1834.8	1818.3
6362	-2.9391	-35.983	-1827.2	1824.3	1808.0
6363	-2.9389	-35.614	-1815.7	1812.7	1796.6
6364	-2.9387	-35.220	-1803.1	1800.1	1784.2
6365	-2.9384	-34.803	-1789.4	1786.4	1770.7
6366	-2.9381	-34.362	-1774.7	1771.7	1756.2
6367	-2.9378	-33.899	-1758.9	1756.0	1740.7
6368	-2.9375	-33.413	-1742.2	1739.2	1724.2
6369	-2.9372	-32.905	-1724.4	1721.5	1706.7
6370	-2.9368	-32.375	-1705.7	1702.7	1688.2
6371	-2.9364	-31.824	-1686.0	1683.0	1668.8
6372	-2.9360	-31.251	-1665.3	1662.4	1648.4
6373	-2.9356	-30.657	-1643.7	1640.8	1627.1
6374	-2.9352	-30.042	-1621.2	1618.2	1604.8
6375	-2.9348	-29.407	-1597.7	1594.7	1581.7
6376	-2.9343	-28.751	-1573.3	1570.4	1557.6
6377	-2.9338	-28.075	-1548.0	1545.1	1532.6
6378	-2.9333	-27.379	-1521.8	1518.9	1506.8
6379	-2.9328	-26.662	-1494.7	1491.8	1480.1
6380	-2.9323	-25.925	-1466.8	1463.8	1452.5
6381	-2.9317	-25.167	-1437.9	1435.0	1424.0
6382	-2.9312	-24.389	-1408.2	1405.3	1394.7
6383	-2.9306	-23.589	-1377.6	1374.7	1364.5
6384	-2.9300	-22.768	-1346.2	1343.3	1333.5

1

```
***** ANSYS - ENGINEERING ANALYSIS SYSTEM  RELEASE 5.7.1   *****
ANSYS/Mechanical U
00251976          VERSION=INTEL NT      11:31:49  DEC 23, 2005 CP=   1166.188

 Point Beach Strainer Inner Rim Plate Analysis


 ***** POST1 NODAL STRESS LISTING *****

 LOAD STEP=     4  SUBSTEP=    15
  TIME=    4.0000      LOAD CASE=   0
 SHELL NODAL RESULTS ARE AT BOTTOM
```

NODE	S1	S2	S3	SINT	SEQV
6385	-2.9294	-21.925	-1313.9	1311.0	1301.6
6386	-2.9287	-21.058	-1280.8	1277.9	1268.9
6387	1269.1	44.626	-2.8802	1272.0	1248.9
6388	1188.8	46.521	-2.8817	1191.7	1167.8
6389	1089.2	47.303	-2.8836	1092.1	1067.9
6390	980.03	45.025	-2.8857	982.92	959.86
6391	867.78	39.852	-2.8879	870.67	850.10
6392	756.09	32.907	-2.8900	758.98	741.73
6393	646.67	25.223	-2.8921	649.56	635.97
6394	540.26	17.378	-2.8942	543.16	533.31
6395	437.28	9.4555	-2.8962	440.18	434.13
6396	338.26	1.0327	-2.8983	341.16	339.21
6397	244.38	-2.9000	-9.1209	253.50	250.44
6398	158.77	-2.9019	-24.254	183.02	173.34
6399	89.698	-2.9037	-52.744	142.44	125.20
6400	47.855	-2.9055	-105.40	153.25	135.22
6401	27.843	-2.9072	-176.93	204.77	191.26
6402	17.561	-2.9088	-255.31	272.87	263.23
6403	11.336	-2.9105	-334.96	346.30	339.40
6404	7.0758	-2.9120	-413.85	420.92	416.02
6405	3.9176	-2.9135	-491.17	495.09	491.71
6406	1.4478	-2.9150	-566.57	568.02	565.85
6407	-0.55597	-2.9164	-639.88	639.32	638.15
6408	-2.2265	-2.9178	-711.00	708.77	708.43
6409	-2.9191	-3.6479	-779.90	776.98	776.61
6410	-2.9204	-4.8771	-846.55	843.63	842.65
6411	-2.9216	-5.9536	-910.96	908.04	906.53
6412	-2.9228	-6.9069	-973.13	970.21	968.22
6413	-2.9240	-7.7580	-1033.1	1030.2	1027.8
6414	-2.9251	-8.5239	-1090.8	1087.9	1085.1
6415	-2.9261	-9.2168	-1146.4	1143.5	1140.3
6416	-2.9272	-9.8472	-1199.8	1196.9	1193.4
6417	-2.9281	-10.423	-1251.1	1248.2	1244.4
6418	-2.9291	-10.950	-1300.3	1297.3	1293.3
6419	-2.9300	-11.434	-1347.4	1344.4	1340.2
6420	-2.9308	-11.879	-1392.4	1389.5	1385.0
6421	-2.9317	-12.289	-1435.4	1432.5	1427.8
6422	-2.9324	-12.667	-1476.5	1473.5	1468.7

1

```
***** ANSYS - ENGINEERING ANALYSIS SYSTEM  RELEASE 5.7.1   *****
ANSYS/Mechanical U
00251976          VERSION=INTEL NT      11:31:49  DEC 23, 2005 CP=   1166.203

 Point Beach Strainer Inner Rim Plate Analysis


 ***** POST1 NODAL STRESS LISTING *****

 LOAD STEP=     4  SUBSTEP=    15
  TIME=    4.0000      LOAD CASE=   0
 SHELL NODAL RESULTS ARE AT BOTTOM
```

NODE	S1	S2	S3	SINT	SEQV
6423	-2.9332	-13.015	-1515.5	1512.6	1507.6
6424	-2.9339	-13.335	-1552.7	1549.7	1544.5
6425	-2.9346	-13.629	-1587.9	1584.9	1579.6
6426	-2.9352	-13.899	-1621.2	1618.3	1612.8
6427	-2.9358	-14.146	-1652.7	1649.8	1644.2
6428	-2.9364	-14.371	-1682.4	1679.4	1673.8
6429	-2.9369	-14.575	-1710.3	1707.3	1701.5
6430	-2.9374	-14.760	-1736.4	1733.4	1727.5
6431	-2.9379	-14.926	-1760.7	1757.8	1751.8
6432	-2.9383	-15.073	-1783.4	1780.5	1774.4
6433	-2.9387	-15.203	-1804.4	1801.5	1795.3
6434	-2.9391	-15.317	-1823.7	1820.8	1814.6
6435	-2.9394	-15.414	-1841.4	1838.5	1832.3
6436	-2.9397	-15.495	-1857.5	1854.6	1848.3
6437	-2.9400	-15.561	-1872.0	1869.1	1862.8
6438	-2.9402	-15.612	-1885.0	1882.1	1875.8
6439	-2.9404	-15.649	-1896.5	1893.5	1887.2
6440	-2.9406	-15.673	-1906.4	1903.5	1897.2
6441	-2.9408	-15.682	-1914.9	1912.0	1905.6
6442	-2.9409	-15.679	-1922.0	1919.0	1912.7
6443	-2.9410	-15.663	-1927.6	1924.6	1918.3
6444	-2.9411	-15.635	-1931.8	1928.8	1922.5
6445	-2.9412	-15.594	-1934.6	1931.7	1925.4
6446	-2.9412	-15.542	-1936.1	1933.1	1926.9
6447	-2.9412	-15.479	-1936.2	1933.3	1927.1
6448	-2.9412	-15.404	-1935.1	1932.1	1925.9
6449	-2.9411	-15.318	-1932.6	1929.7	1923.5
6450	-2.9411	-15.222	-1928.9	1926.0	1919.8
6451	-2.9410	-15.115	-1923.9	1921.0	1914.9
6452	-2.9409	-14.998	-1917.7	1914.8	1908.8
6453	-2.9407	-14.872	-1910.3	1907.4	1901.5
6454	-2.9406	-14.735	-1901.7	1898.8	1892.9
6455	-2.9404	-14.589	-1892.0	1889.0	1883.3
6456	-2.9402	-14.434	-1881.1	1878.1	1872.4
6457	-2.9399	-14.269	-1869.0	1866.1	1860.5
6458	-2.9397	-14.096	-1855.9	1852.9	1847.4
6459	-2.9394	-13.914	-1841.6	1838.7	1833.2
6460	-2.9391	-13.723	-1826.3	1823.3	1818.0

1

```
***** ANSYS - ENGINEERING ANALYSIS SYSTEM  RELEASE 5.7.1   *****
ANSYS/Mechanical U
00251976          VERSION=INTEL NT      11:31:49  DEC 23, 2005 CP=   1166.219

 Point Beach Strainer Inner Rim Plate Analysis


 ***** POST1 NODAL STRESS LISTING *****

 LOAD STEP=     4  SUBSTEP=    15
  TIME=    4.0000      LOAD CASE=   0
 SHELL NODAL RESULTS ARE AT BOTTOM
```

NODE	S1	S2	S3	SINT	SEQV
6461	-2.9388	-13.523	-1809.8	1806.9	1801.6
6462	-2.9385	-13.315	-1792.4	1789.4	1784.3
6463	-2.9381	-13.098	-1773.9	1770.9	1765.9
6464	-2.9377	-12.874	-1754.3	1751.4	1746.4
6465	-2.9373	-12.641	-1733.8	1730.8	1726.0
6466	-2.9369	-12.400	-1712.2	1709.3	1704.6
6467	-2.9365	-12.151	-1689.7	1686.8	1682.2
6468	-2.9361	-11.893	-1666.2	1663.3	1658.8
6469	-2.9356	-11.628	-1641.7	1638.8	1634.4
6470	-2.9351	-11.354	-1616.3	1613.3	1609.2
6471	-2.9346	-11.072	-1589.9	1587.0	1582.9
6472	-2.9341	-10.782	-1562.6	1559.7	1555.7
6473	-2.9335	-10.483	-1534.3	1531.4	1527.7
6474	-2.9330	-10.175	-1505.2	1502.3	1498.6
6475	-2.9324	-9.8589	-1475.1	1472.2	1468.7
6476	-2.9318	-9.5331	-1444.1	1441.2	1437.9
6477	-2.9312	-9.1977	-1412.3	1409.3	1406.2
6478	-2.9306	-8.8520	-1379.5	1376.6	1373.6
6479	-2.9300	-8.4956	-1345.8	1342.9	1340.1
6480	-2.9293	-8.1276	-1311.3	1308.4	1305.8

```
MINIMUM VALUES
NODE        4070        4535        4070        2134        2134
VALUE    -2.9542     -95.269     -2.616.7      22.944      21.465

MAXIMUM VALUES
NODE        4959        4959        4959        4070        4070
VALUE     1875.2      837.77     -2.8686      2613.7      2612.5
1
```

```
***** ANSYS - ENGINEERING ANALYSIS SYSTEM  RELEASE 5.7.1   *****
ANSYS/Mechanical U
00251976          VERSION=INTEL NT      11:31:49  DEC 23, 2005 CP=   1166.219

 Point Beach Strainer Inner Rim Plate Analysis


 ***** POST1 NODAL STRESS LISTING *****

 LOAD STEP=     4  SUBSTEP=    15
  TIME=    4.0000      LOAD CASE=   0
 SHELL NODAL RESULTS ARE AT BOTTOM

   NODE    S1          S2          S3          SINT        SEQV
***** ESTIMATED BOUNDS CONSIDERING THE EFFECT OF DISCRETIZATION ERROR *****

MINIMUM VALUES
NODE         99        4531        4070        2134        2134
VALUE   -28.855     -107.46     -2626.1      15.298      13.819

MAXIMUM VALUES
NODE       4959        4959        3348        4070        4070
VALUE    1921.6      884.18      65.689      2623.1      2621.9
*****************************************************************************
1
```

```
***** ANSYS - ENGINEERING ANALYSIS SYSTEM  RELEASE 5.7.1   *****
ANSYS/Mechanical U
00251976          VERSION=INTEL NT      11:31:50  DEC 23, 2005 CP=   1166.250

 Point Beach Strainer Inner Rim Plate Analysis


 ***** POST1 TOTAL REACTION SOLUTION LISTING *****

 LOAD STEP=     4  SUBSTEP=    15
  TIME=    4.0000      LOAD CASE=   0

 THE FOLLOWING X,Y,Z SOLUTIONS ARE IN GLOBAL COORDINATES

   NODE       FX          FY          FZ
      1                             0.67298E-06
     10 -0.30836     0.33652       0.0000
     95 -0.16533     0.18042       0.25157E-04
     96 -0.45426     0.49574       0.0000
     97 -0.48989     0.53462       0.0000
     98 -0.54469     0.59442       0.0000
     99 -0.56289     0.61429       0.0000
    100 -0.53673     0.58574       0.0000
    101 -0.46935     0.51220       0.0000
    102 -0.38167     0.41652       0.0000
    103                            -0.58979E-01
    104                            -0.58529E-01
    105                            -0.51415E-01
    106                            -0.42735E-01
    107                            -0.34206E-01
    108                            -0.26541E-01
    109                            -0.19979E-01
    110                            -0.14544E-01
    111                            -0.10159E-01
    112                            -0.67000E-02
    113                            -0.40320E-02
    114                            -0.20219E-02
    115                            -0.54779E-03
    116                             0.49750E-03
    117                             0.12052E-02
    118                             0.16514E-02
    119                             0.18986E-02
    120                             0.19973E-02
    121                             0.19880E-02
    122                             0.19029E-02
    123                             0.17671E-02
    124                             0.16001E-02
    125                             0.14166E-02
    126                             0.12280E-02
    127                             0.10424E-02
    128                             0.86543E-03
    129                             0.70108E-03
1
```

```
***** ANSYS - ENGINEERING ANALYSIS SYSTEM  RELEASE 5.7.1   *****
ANSYS/Mechanical U
00251976          VERSION=INTEL NT      11:31:50  DEC 23, 2005 CP=   1166.250

 Point Beach Strainer Inner Rim Plate Analysis


 ***** POST1 TOTAL REACTION SOLUTION LISTING *****

 LOAD STEP=     4  SUBSTEP=   15
  TIME=    4.0000      LOAD CASE=   0

 THE FOLLOWING X,Y,Z SOLUTIONS ARE IN GLOBAL COORDINATES

   NODE       FX           FY           FZ
    130                            0.55173E-03
    131                            0.41863E-03
    132                            0.30217E-03
    133                            0.20208E-03
    134                            0.11765E-03
    135                            0.47826E-04
    136                           -0.86402E-05
    137                           -0.53106E-04
    138                           -0.86973E-04
    139                           -0.11163E-03
    140                           -0.12841E-03
    141                           -0.13858E-03
    142                           -0.14329E-03
    143                           -0.14360E-03
    144                           -0.14045E-03
    145                           -0.13465E-03
    146                           -0.12692E-03
    147                           -0.11787E-03
    148                           -0.10802E-03
    149                           -0.97768E-04
    150                           -0.87468E-04
    151                           -0.77380E-04
    152                           -0.67709E-04
    153                           -0.58602E-04
    154                           -0.50162E-04
    155                           -0.42451E-04
    156                           -0.35499E-04
    157                           -0.29309E-04
    158                           -0.23865E-04
    159                           -0.19132E-04
    160                           -0.15064E-04
    161                           -0.11606E-04
    162                           -0.86969E-05
    163                           -0.62698E-05
    164                           -0.42582E-05
    165                           -0.25930E-05
    166                           -0.12075E-05
1
```

```
***** ANSYS - ENGINEERING ANALYSIS SYSTEM  RELEASE 5.7.1   *****
ANSYS/Mechanical U
00251976          VERSION=INTEL NT      11:31:50  DEC 23, 2005 CP=   1166.250

 Point Beach Strainer Inner Rim Plate Analysis


 ***** POST1 TOTAL REACTION SOLUTION LISTING *****

 LOAD STEP=     4  SUBSTEP=    15
  TIME=    4.0000      LOAD CASE=   0

 THE FOLLOWING X,Y,Z SOLUTIONS ARE IN GLOBAL COORDINATES

   NODE       FX           FY           FZ
    167                           -0.35493E-07
    168                            0.98514E-06
    169                            0.19140E-05
    170                            0.28049E-05
    171                            0.37068E-05
    172                            0.46605E-05
    173                            0.56990E-05
    174                            0.68433E-05
    175                            0.81022E-05
    176                            0.94669E-05
    177                            0.10909E-04
    178                            0.12376E-04
    179                            0.13786E-04
    180                            0.15024E-04
    181                            0.15936E-04
    182                            0.16326E-04
    183                            0.15955E-04
    184                            0.14540E-04
    185                            0.11757E-04
    186                            0.72586E-05
    870                           -0.56031E-07
    878                           -0.14016E-04
    879                           -0.23413E-04
    880                           -0.29074E-04
    881                           -0.31767E-04
    882                           -0.32189E-04
    883                           -0.30949E-04
    884                           -0.28568E-04
    885                           -0.25474E-04
    886                           -0.22010E-04
    887                           -0.18437E-04
    888                           -0.14952E-04
    889                           -0.11691E-04
    890                           -0.87466E-05
    891                           -0.61701E-05
    892                           -0.39857E-05
    893                           -0.21941E-05
1
```

```
***** ANSYS - ENGINEERING ANALYSIS SYSTEM  RELEASE 5.7.1   *****
ANSYS/Mechanical U
00251976          VERSION=INTEL NT      11:31:50  DEC 23, 2005 CP=   1166.266

 Point Beach Strainer Inner Rim Plate Analysis


 ***** POST1 TOTAL REACTION SOLUTION LISTING *****

 LOAD STEP=     4  SUBSTEP=    15
  TIME=    4.0000      LOAD CASE=   0

 THE FOLLOWING X,Y,Z SOLUTIONS ARE IN GLOBAL COORDINATES

   NODE       FX           FY           FZ
    894                           -0.78065E-06
    895                            0.28221E-06
    896                            0.10293E-05
    897                            0.15017E-05
    898                            0.17431E-05
    899                            0.17998E-05
    900                            0.17187E-05
    901                            0.15477E-05
    902                            0.13347E-05
    903                            0.11280E-05
    904                            0.97633E-06
    905                            0.92941E-06
    906                            0.10377E-05
    907                            0.13530E-05
    908                            0.19288E-05
    909                            0.28200E-05
    910                            0.40828E-05
    911                            0.57750E-05
    912                            0.79547E-05
    913                            0.10680E-04
    914                            0.14007E-04
    915                            0.17989E-04
    916                            0.22673E-04
    917                            0.28100E-04
    918                            0.34296E-04
    919                            0.41276E-04
    920                            0.49030E-04
    921                            0.57527E-04
    922                            0.66702E-04
    923                            0.76452E-04
    924                            0.86627E-04
    925                            0.97027E-04
    926                            0.10738E-03
    927                            0.11736E-03
    928                            0.12654E-03
    929                            0.13442E-03
    930                            0.14039E-03
1
```

```
***** ANSYS - ENGINEERING ANALYSIS SYSTEM  RELEASE 5.7.1   *****
ANSYS/Mechanical U
00251976          VERSION=INTEL NT      11:31:50  DEC 23, 2005 CP=   1166.266

 Point Beach Strainer Inner Rim Plate Analysis


 ***** POST1 TOTAL REACTION SOLUTION LISTING *****

 LOAD STEP=     4  SUBSTEP=    15
  TIME=    4.0000      LOAD CASE=   0

 THE FOLLOWING X,Y,Z SOLUTIONS ARE IN GLOBAL COORDINATES

   NODE       FX           FY           FZ
    931                            0.14373E-03
    932                            0.14363E-03
    933                            0.13915E-03
    934                            0.12924E-03
    935                            0.11273E-03
    936                            0.88377E-04
    937                            0.54829E-04
    938                            0.10695E-04
    939                           -0.45430E-04
    940                           -0.11492E-03
    941                           -0.19903E-03
    942                           -0.29882E-03
    943                           -0.41504E-03
    944                           -0.54797E-03
    945                           -0.69725E-03
    946                           -0.86166E-03
    947                           -0.10388E-02
    948                           -0.12249E-02
    949                           -0.14142E-02
    950                           -0.15985E-02
    951                           -0.17667E-02
    952                           -0.19041E-02
    953                           -0.19910E-02
    954                           -0.20025E-02
    955                           -0.19062E-02
    956                           -0.16618E-02
    957                           -0.12184E-02
    958                           -0.51353E-03
    959                            0.52915E-03
    960                            0.20011E-02
    961                            0.40098E-02
    962                            0.66775E-02
    963                            0.10138E-01
    964                            0.14526E-01
    965                            0.19966E-01
    966                            0.26535E-01
    967                            0.34210E-01
1
```

```
***** ANSYS - ENGINEERING ANALYSIS SYSTEM  RELEASE 5.7.1   *****
ANSYS/Mechanical U
00251976          VERSION=INTEL NT      11:31:50  DEC 23, 2005 CP=   1166.266

 Point Beach Strainer Inner Rim Plate Analysis


 ***** POST1 TOTAL REACTION SOLUTION LISTING *****

 LOAD STEP=     4  SUBSTEP=    15
  TIME=    4.0000      LOAD CASE=   0

 THE FOLLOWING X,Y,Z SOLUTIONS ARE IN GLOBAL COORDINATES

   NODE       FX           FY           FZ
    968                              0.42750E-01
    969                              0.51443E-01
    970                              0.58567E-01
    971                              0.59026E-01
   1630 -0.11159     -0.12178        0.0000
   1715 -0.59203E-01-0.64609E-01 0.57627E-04
   1716 -0.16448     -0.17950        0.0000
   1717 -0.17895     -0.19529        0.0000
   1718 -0.20016     -0.21843        0.0000
   1719 -0.20724     -0.22616        0.0000
   1720 -0.19726     -0.21528        0.0000
   1721 -0.17148     -0.18713        0.0000
   1722 -0.13792     -0.15051        0.0000
   1723                             -0.21494E-01
   1724                             -0.21466E-01
   1725                             -0.18886E-01
   1726                             -0.15699E-01
   1727                             -0.12560E-01
   1728                             -0.97397E-02
   1729                             -0.73269E-02
   1730                             -0.53312E-02
   1731                             -0.37224E-02
   1732                             -0.24550E-02
   1733                             -0.14782E-02
   1734                             -0.74271E-03
   1735                             -0.20352E-03
   1736                              0.17878E-03
   1737                              0.43773E-03
   1738                              0.60118E-03
   1739                              0.69198E-03
   1740                              0.72858E-03
   1741                              0.72576E-03
   1742                              0.69520E-03
   1743                              0.64608E-03
   1744                              0.58548E-03
   1745                              0.51883E-03
   1746                              0.45020E-03
1
```

```
***** ANSYS - ENGINEERING ANALYSIS SYSTEM  RELEASE 5.7.1   *****
ANSYS/Mechanical U
00251976          VERSION=INTEL NT      11:31:50  DEC 23, 2005 CP=   1166.266

 Point Beach Strainer Inner Rim Plate Analysis


 ***** POST1 TOTAL REACTION SOLUTION LISTING *****

 LOAD STEP=     4  SUBSTEP=    15
  TIME=    4.0000      LOAD CASE=   0

 THE FOLLOWING X,Y,Z SOLUTIONS ARE IN GLOBAL COORDINATES

   NODE       FX           FY           FZ
   1747                            0.38256E-03
   1748                            0.31803E-03
   1749                            0.25803E-03
   1750                            0.20345E-03
   1751                            0.15476E-03
   1752                            0.11211E-03
   1753                            0.75416E-04
   1754                            0.44418E-04
   1755                            0.18749E-04
   1756                           -0.20441E-05
   1757                           -0.18448E-04
   1758                           -0.30973E-04
   1759                           -0.40117E-04
   1760                           -0.46371E-04
   1761                           -0.50187E-04
   1762                           -0.51990E-04
   1763                           -0.52160E-04
   1764                           -0.51042E-04
   1765                           -0.48932E-04
   1766                           -0.46095E-04
   1767                           -0.42748E-04
   1768                           -0.39082E-04
   1769                           -0.35246E-04
   1770                           -0.31368E-04
   1771                           -0.27542E-04
   1772                           -0.23848E-04
   1773                           -0.20338E-04
   1774                           -0.17054E-04
   1775                           -0.14020E-04
   1776                           -0.11253E-04
   1777                           -0.87569E-05
   1778                           -0.65333E-05
   1779                           -0.45761E-05
   1780                           -0.28787E-05
   1781                           -0.14305E-05
   1782                           -0.22277E-06
   1783                            0.75484E-06
1
```

```
***** ANSYS - ENGINEERING ANALYSIS SYSTEM  RELEASE 5.7.1   *****
ANSYS/Mechanical U
00251976          VERSION=INTEL NT      11:31:50  DEC 23, 2005 CP=   1166.266

 Point Beach Strainer Inner Rim Plate Analysis


 ***** POST1 TOTAL REACTION SOLUTION LISTING *****

 LOAD STEP=     4  SUBSTEP=    15
  TIME=    4.0000      LOAD CASE=   0

 THE FOLLOWING X,Y,Z SOLUTIONS ARE IN GLOBAL COORDINATES

   NODE       FX           FY           FZ
   1784                             0.15096E-05
   1785                             0.20488E-05
   1786                             0.23761E-05
   1787                             0.24947E-05
   1788                             0.24044E-05
   1789                             0.21050E-05
   1790                             0.15942E-05
   1791                             0.87119E-06
   1792                            -0.64041E-07
   1793                            -0.12068E-05
   1794                            -0.25476E-05
   1795                            -0.40669E-05
   1796                            -0.57338E-05
   1797                            -0.75001E-05
   1798                            -0.92972E-05
   1799                            -0.11030E-04
   1800                            -0.12572E-04
   1801                            -0.13762E-04
   1802                            -0.14398E-04
   1803                            -0.14234E-04
   1804                            -0.12984E-04
   1805                            -0.10322E-04
   1806                            -0.58933E-05
   2490                            -0.13202E-06
   2498                            -0.14090E-04
   2499                            -0.23477E-04
   2500                            -0.29123E-04
   2501                            -0.31793E-04
   2502                            -0.32184E-04
   2503                            -0.30906E-04
   2504                            -0.28478E-04
   2505                            -0.25328E-04
   2506                            -0.21797E-04
   2507                            -0.18147E-04
   2508                            -0.14574E-04
   2509                            -0.11214E-04
   2510                            -0.81579E-05
1
```

```
***** ANSYS - ENGINEERING ANALYSIS SYSTEM  RELEASE 5.7.1   *****
ANSYS/Mechanical U
00251976          VERSION=INTEL NT      11:31:50  DEC 23, 2005 CP=   1166.281

 Point Beach Strainer Inner Rim Plate Analysis


 ***** POST1 TOTAL REACTION SOLUTION LISTING *****

 LOAD STEP=     4  SUBSTEP=    15
  TIME=    4.0000      LOAD CASE=   0

 THE FOLLOWING X,Y,Z SOLUTIONS ARE IN GLOBAL COORDINATES

   NODE      FX          FY          FZ
   2511                         -0.54579E-05
   2512                         -0.31388E-05
   2513                         -0.12021E-05
   2514                          0.36526E-06
   2515                          0.15887E-05
   2516                          0.24996E-05
   2517                          0.31350E-05
   2518                          0.35328E-05
   2519                          0.37329E-05
   2520                          0.37732E-05
   2521                          0.36917E-05
   2522                          0.35236E-05
   2523                          0.33034E-05
   2524                          0.30624E-05
   2525                          0.28316E-05
   2526                          0.26393E-05
   2527                          0.25135E-05
   2528                          0.24800E-05
   2529                          0.25649E-05
   2530                          0.27926E-05
   2531                          0.31878E-05
   2532                          0.37735E-05
   2533                          0.45729E-05
   2534                          0.56071E-05
   2535                          0.68967E-05
   2536                          0.84586E-05
   2537                          0.10308E-04
   2538                          0.12455E-04
   2539                          0.14905E-04
   2540                          0.17655E-04
   2541                          0.20694E-04
   2542                          0.23997E-04
   2543                          0.27531E-04
   2544                          0.31240E-04
   2545                          0.35053E-04
   2546                          0.38874E-04
   2547                          0.42585E-04
1
```

```
***** ANSYS - ENGINEERING ANALYSIS SYSTEM  RELEASE 5.7.1   *****
ANSYS/Mechanical U
00251976          VERSION=INTEL NT      11:31:50  DEC 23, 2005 CP=   1166.297

 Point Beach Strainer Inner Rim Plate Analysis


 ***** POST1 TOTAL REACTION SOLUTION LISTING *****

 LOAD STEP=     4  SUBSTEP=    15
  TIME=    4.0000      LOAD CASE=   0

 THE FOLLOWING X,Y,Z SOLUTIONS ARE IN GLOBAL COORDINATES

   NODE       FX          FY          FZ
   2548                          0.46031E-04
   2549                          0.49034E-04
   2550                          0.51372E-04
   2551                          0.52789E-04
   2552                          0.52985E-04
   2553                          0.51623E-04
   2554                          0.48315E-04
   2555                          0.42640E-04
   2556                          0.34134E-04
   2557                          0.22306E-04
   2558                          0.66357E-05
   2559                         -0.13395E-04
   2560                         -0.38306E-04
   2561                         -0.68568E-04
   2562                         -0.10460E-03
   2563                         -0.14669E-03
   2564                         -0.19499E-03
   2565                         -0.24939E-03
   2566                         -0.30951E-03
   2567                         -0.37453E-03
   2568                         -0.44311E-03
   2569                         -0.51320E-03
   2570                         -0.58193E-03
   2571                         -0.64528E-03
   2572                         -0.69789E-03
   2573                         -0.73268E-03
   2574                         -0.74049E-03
   2575                         -0.70954E-03
   2576                         -0.62493E-03
   2577                         -0.46796E-03
   2578                         -0.21549E-03
   2579                          0.16085E-03
   2580                          0.69510E-03
   2581                          0.14274E-02
   2582                          0.24036E-02
   2583                          0.36739E-02
   2584                          0.52896E-02
1
```

```
***** ANSYS - ENGINEERING ANALYSIS SYSTEM  RELEASE 5.7.1   *****
ANSYS/Mechanical U
00251976          VERSION=INTEL NT      11:31:50  DEC 23, 2005 CP=   1166.328

 Point Beach Strainer Inner Rim Plate Analysis


 ***** POST1 TOTAL REACTION SOLUTION LISTING *****

 LOAD STEP=     4  SUBSTEP=    15
  TIME=    4.0000      LOAD CASE=   0

 THE FOLLOWING X,Y,Z SOLUTIONS ARE IN GLOBAL COORDINATES

   NODE      FX          FY          FZ
   2585                          0.72971E-02
   2586                          0.97268E-02
   2587                          0.12569E-01
   2588                          0.15734E-01
   2589                          0.18948E-01
   2590                          0.21554E-01
   2591                          0.21601E-01
   3250                         -0.98403E-06
   3259 -0.30325     0.33094      0.0000
   3344 -0.16403     0.17900      0.57884E-02
   3345 -0.44657     0.48735      0.0000
   3346 -0.47815     0.52181      0.0000
   3347 -0.52903     0.57734      0.0000
   3348 -0.54586     0.59570      0.0000
   3349 -0.52126     0.56886      0.0000
   3350 -0.45809     0.49992      0.0000
   3351 -0.37590     0.41022      0.0000
   3352                          0.62688E-01
   3353                          0.60111E-01
   3354                          0.50848E-01
   3355                          0.40376E-01
   3356                          0.30745E-01
   3357                          0.22707E-01
   3358                          0.16343E-01
   3359                          0.11467E-01
   3360                          0.78080E-02
   3361                          0.51038E-02
   3362                          0.31277E-02
   3363                          0.16977E-02
   3364                          0.67362E-03
   3365                         -0.50136E-04
   3366                         -0.55149E-03
   3367                         -0.88771E-03
   3368                         -0.11006E-02
   3369                         -0.12211E-02
   3370                         -0.12722E-02
   3371                         -0.12716E-02
1
```

```
***** ANSYS - ENGINEERING ANALYSIS SYSTEM  RELEASE 5.7.1   *****
ANSYS/Mechanical U
00251976          VERSION=INTEL NT      11:31:50  DEC 23, 2005 CP=   1166.359

 Point Beach Strainer Inner Rim Plate Analysis


 ***** POST1 TOTAL REACTION SOLUTION LISTING *****

 LOAD STEP=     4  SUBSTEP=    15
  TIME=    4.0000      LOAD CASE=   0

 THE FOLLOWING X,Y,Z SOLUTIONS ARE IN GLOBAL COORDINATES

   NODE      FX          FY          FZ
   3372                        -0.12325E-02
   3373                        -0.11659E-02
   3374                        -0.10801E-02
   3375                        -0.98215E-03
   3376                        -0.87731E-03
   3377                        -0.77017E-03
   3378                        -0.66406E-03
   3379                        -0.56179E-03
   3380                        -0.46521E-03
   3381                        -0.37584E-03
   3382                        -0.29449E-03
   3383                        -0.22176E-03
   3384                        -0.15771E-03
   3385                        -0.10231E-03
   3386                        -0.55158E-04
   3387                        -0.15862E-04
   3388                         0.16242E-04
   3389                         0.41739E-04
   3390                         0.61389E-04
   3391                         0.75831E-04
   3392                         0.85817E-04
   3393                         0.91953E-04
   3394                         0.94918E-04
   3395                         0.95238E-04
   3396                         0.93483E-04
   3397                         0.90077E-04
   3398                         0.85474E-04
   3399                         0.79991E-04
   3400                         0.73968E-04
   3401                         0.67627E-04
   3402                         0.61209E-04
   3403                         0.54852E-04
   3404                         0.48714E-04
   3405                         0.42868E-04
   3406                         0.37407E-04
   3407                         0.32352E-04
   3408                         0.27749E-04
1
```

```
***** ANSYS - ENGINEERING ANALYSIS SYSTEM  RELEASE 5.7.1   *****
ANSYS/Mechanical U
00251976          VERSION=INTEL NT      11:31:50  DEC 23, 2005 CP=   1166.359

 Point Beach Strainer Inner Rim Plate Analysis


 ***** POST1 TOTAL REACTION SOLUTION LISTING *****

 LOAD STEP=     4  SUBSTEP=    15
  TIME=    4.0000      LOAD CASE=   0

 THE FOLLOWING X,Y,Z SOLUTIONS ARE IN GLOBAL COORDINATES

   NODE       FX          FY          FZ
   3409                          0.23584E-04
   3410                          0.19867E-04
   3411                          0.16560E-04
   3412                          0.13649E-04
   3413                          0.11083E-04
   3414                          0.88330E-05
   3415                          0.68391E-05
   3416                          0.50659E-05
   3417                          0.34520E-05
   3418                          0.19599E-05
   3419                          0.53229E-06
   3420                         -0.86425E-06
   3421                         -0.22773E-05
   3422                         -0.37288E-05
   3423                         -0.52487E-05
   3424                         -0.68379E-05
   3425                         -0.84973E-05
   3426                         -0.10193E-04
   3427                         -0.11882E-04
   3428                         -0.13479E-04
   3429                         -0.14877E-04
   3430                         -0.15919E-04
   3431                         -0.16418E-04
   3432                         -0.16132E-04
   3433                         -0.14785E-04
   3434                         -0.12050E-04
   3435                         -0.75763E-05
   4118                          0.13828E-04
   4119                          0.23223E-04
   4120                          0.28882E-04
   4121                          0.31573E-04
   4122                          0.31991E-04
   4123                          0.30750E-04
   4124                          0.28368E-04
   4125                          0.25277E-04
   4126                          0.21818E-04
   4127                          0.18257E-04
```

1

```
***** ANSYS - ENGINEERING ANALYSIS SYSTEM  RELEASE 5.7.1   *****
ANSYS/Mechanical U
00251976          VERSION=INTEL NT      11:31:50  DEC 23, 2005 CP=   1166.359

 Point Beach Strainer Inner Rim Plate Analysis


 ***** POST1 TOTAL REACTION SOLUTION LISTING *****

 LOAD STEP=     4  SUBSTEP=    15
  TIME=    4.0000      LOAD CASE=   0

 THE FOLLOWING X,Y,Z SOLUTIONS ARE IN GLOBAL COORDINATES

   NODE       FX           FY           FZ
   4128                           0.14789E-04
   4129                           0.11557E-04
   4130                           0.86500E-05
   4131                           0.61267E-05
   4132                           0.40094E-05
   4133                           0.23062E-05
   4134                           0.10007E-05
   4135                           0.73598E-07
   4136                          -0.51207E-06
   4137                          -0.78834E-06
   4138                          -0.80174E-06
   4139                          -0.58918E-06
   4140                          -0.20153E-06
   4141                           0.32275E-06
   4142                           0.92981E-06
   4143                           0.15800E-05
   4144                           0.22155E-05
   4145                           0.27939E-05
   4146                           0.32511E-05
   4147                           0.35398E-05
   4148                           0.35870E-05
   4149                           0.33382E-05
   4150                           0.27092E-05
   4151                           0.16374E-05
   4152                           0.26560E-07
   4153                          -0.21934E-05
   4154                          -0.51286E-05
   4155                          -0.88529E-05
   4156                          -0.13477E-04
   4157                          -0.19070E-04
   4158                          -0.25736E-04
   4159                          -0.33526E-04
   4160                          -0.42520E-04
   4161                          -0.52728E-04
   4162                          -0.64182E-04
   4163                          -0.76817E-04
   4164                          -0.90581E-04
1
```

```
***** ANSYS - ENGINEERING ANALYSIS SYSTEM  RELEASE 5.7.1   *****
ANSYS/Mechanical U
00251976          VERSION=INTEL NT      11:31:50  DEC 23, 2005 CP=   1166.359

 Point Beach Strainer Inner Rim Plate Analysis


 ***** POST1 TOTAL REACTION SOLUTION LISTING *****

 LOAD STEP=     4  SUBSTEP=    15
  TIME=    4.0000      LOAD CASE=   0

 THE FOLLOWING X,Y,Z SOLUTIONS ARE IN GLOBAL COORDINATES

   NODE       FX          FY          FZ
   4165                          -0.10530E-03
   4166                          -0.12078E-03
   4167                          -0.13669E-03
   4168                          -0.15265E-03
   4169                          -0.16809E-03
   4170                          -0.18239E-03
   4171                          -0.19468E-03
   4172                          -0.20403E-03
   4173                          -0.20920E-03
   4174                          -0.20890E-03
   4175                          -0.20149E-03
   4176                          -0.18527E-03
   4177                          -0.15822E-03
   4178                          -0.11828E-03
   4179                          -0.63126E-04
   4180                           0.94961E-05
   4181                           0.10199E-03
   4182                           0.21645E-03
   4183                           0.35487E-03
   4184                           0.51853E-03
   4185                           0.70817E-03
   4186                           0.92316E-03
   4187                           0.11615E-02
   4188                           0.14190E-02
   4189                           0.16888E-02
   4190                           0.19602E-02
   4191                           0.22182E-02
   4192                           0.24423E-02
   4193                           0.26049E-02
   4194                           0.26703E-02
   4195                           0.25935E-02
   4196                           0.23184E-02
   4197                           0.17774E-02
   4198                           0.89111E-03
   4199                          -0.43099E-03
   4200                          -0.22876E-02
   4201                          -0.47798E-02
1
```

```
***** ANSYS - ENGINEERING ANALYSIS SYSTEM  RELEASE 5.7.1   *****
ANSYS/Mechanical U
00251976          VERSION=INTEL NT      11:31:50  DEC 23, 2005 CP=   1166.391

 Point Beach Strainer Inner Rim Plate Analysis


 ***** POST1 TOTAL REACTION SOLUTION LISTING *****

 LOAD STEP=     4  SUBSTEP=    15
  TIME=    4.0000      LOAD CASE=   0

 THE FOLLOWING X,Y,Z SOLUTIONS ARE IN GLOBAL COORDINATES

   NODE      FX          FY          FZ
   4202                          -0.80022E-02
   4203                          -0.12028E-01
   4204                          -0.16891E-01
   4205                          -0.22560E-01
   4206                          -0.28913E-01
   4207                          -0.35717E-01
   4208                          -0.42601E-01
   4209                          -0.48970E-01
   4210                          -0.53644E-01
   4211                          -0.52530E-01
   4870 -0.10670    -0.11645      0.0000
   4955 -0.58169E-01-0.63481E-01 0.60768E-02
   4956 -0.15710    -0.17145      0.0000
   4957 -0.16718    -0.18245      0.0000
   4958 -0.18419    -0.20101      0.0000
   4959 -0.18979    -0.20712      0.0000
   4960 -0.18148    -0.19805      0.0000
   4961 -0.16018    -0.17481      0.0000
   4962 -0.13248    -0.14457      0.0000
   4963                          0.25482E-01
   4964                          0.23195E-01
   4965                          0.18337E-01
   4966                          0.13252E-01
   4967                          0.89448E-02
   4968                          0.57239E-02
   4969                          0.35143E-02
   4970                          0.21022E-02
   4971                          0.12560E-02
   4972                          0.78114E-03
   4973                          0.53117E-03
   4974                          0.40529E-03
   4975                          0.33897E-03
   4976                          0.29438E-03
   4977                          0.25197E-03
   4978                          0.20372E-03
   4979                          0.14852E-03
   4980                          0.88538E-04
1
```

```
***** ANSYS - ENGINEERING ANALYSIS SYSTEM  RELEASE 5.7.1   *****
ANSYS/Mechanical U
00251976          VERSION=INTEL NT      11:31:50  DEC 23, 2005 CP=   1166.406

 Point Beach Strainer Inner Rim Plate Analysis


 ***** POST1 TOTAL REACTION SOLUTION LISTING *****

 LOAD STEP=     4  SUBSTEP=    15
  TIME=    4.0000      LOAD CASE=   0

 THE FOLLOWING X,Y,Z SOLUTIONS ARE IN GLOBAL COORDINATES

   NODE      FX          FY          FZ
   4981                           0.27483E-04
   4982                          -0.31120E-04
   4983                          -0.84088E-04
   4984                          -0.12938E-03
   4985                          -0.16558E-03
   4986                          -0.19238E-03
   4987                          -0.20984E-03
   4988                          -0.21877E-03
   4989                          -0.22003E-03
   4990                          -0.21494E-03
   4991                          -0.20461E-03
   4992                          -0.19040E-03
   4993                          -0.17334E-03
   4994                          -0.15456E-03
   4995                          -0.13488E-03
   4996                          -0.11512E-03
   4997                          -0.95817E-04
   4998                          -0.77507E-04
   4999                          -0.60458E-04
   5000                          -0.44977E-04
   5001                          -0.31131E-04
   5002                          -0.19045E-04
   5003                          -0.86550E-05
   5004                           0.35958E-07
   5005                           0.71724E-05
   5006                           0.12820E-04
   5007                           0.17160E-04
   5008                           0.20292E-04
   5009                           0.22402E-04
   5010                           0.23595E-04
   5011                           0.24048E-04
   5012                           0.23856E-04
   5013                           0.23172E-04
   5014                           0.22075E-04
   5015                           0.20692E-04
   5016                           0.19082E-04
   5017                           0.17346E-04
1
```

```
***** ANSYS - ENGINEERING ANALYSIS SYSTEM  RELEASE 5.7.1   *****
ANSYS/Mechanical U
00251976          VERSION=INTEL NT      11:31:50  DEC 23, 2005 CP=   1166.422

 Point Beach Strainer Inner Rim Plate Analysis


 ***** POST1 TOTAL REACTION SOLUTION LISTING *****

 LOAD STEP=     4  SUBSTEP=    15
  TIME=    4.0000      LOAD CASE=   0

 THE FOLLOWING X,Y,Z SOLUTIONS ARE IN GLOBAL COORDINATES

   NODE      FX          FY          FZ
   5018                          0.15526E-04
   5019                          0.13699E-04
   5020                          0.11893E-04
   5021                          0.10166E-04
   5022                          0.85341E-05
   5023                          0.70428E-05
   5024                          0.56999E-05
   5025                          0.45411E-05
   5026                          0.35701E-05
   5027                          0.28158E-05
   5028                          0.22793E-05
   5029                          0.19839E-05
   5030                          0.19283E-05
   5031                          0.21293E-05
   5032                          0.25800E-05
   5033                          0.32872E-05
   5034                          0.42322E-05
   5035                          0.54034E-05
   5036                          0.67599E-05
   5037                          0.82592E-05
   5038                          0.98228E-05
   5039                          0.11360E-04
   5040                          0.12735E-04
   5041                          0.13789E-04
   5042                          0.14313E-04
   5043                          0.14064E-04
   5044                          0.12749E-04
   5045                          0.10044E-04
   5046                          0.55917E-05
   5729                          0.13900E-04
   5730                          0.23285E-04
   5731                          0.28927E-04
   5732                          0.31594E-04
   5733                          0.31981E-04
   5734                          0.30700E-04
   5735                          0.28271E-04
   5736                          0.25123E-04
1
```

```
***** ANSYS - ENGINEERING ANALYSIS SYSTEM  RELEASE 5.7.1   *****
ANSYS/Mechanical U
00251976          VERSION=INTEL NT      11:31:50  DEC 23, 2005 CP=   1166.438

 Point Beach Strainer Inner Rim Plate Analysis


 ***** POST1 TOTAL REACTION SOLUTION LISTING *****

 LOAD STEP=     4  SUBSTEP=    15
  TIME=    4.0000      LOAD CASE=   0

 THE FOLLOWING X,Y,Z SOLUTIONS ARE IN GLOBAL COORDINATES

   NODE       FX           FY           FZ
   5737                             0.21597E-04
   5738                             0.17959E-04
   5739                             0.14404E-04
   5740                             0.11074E-04
   5741                             0.80575E-05
   5742                             0.54136E-05
   5743                             0.31654E-05
   5744                             0.13222E-05
   5745                            -0.13104E-06
   5746                            -0.12110E-05
   5747                            -0.19513E-05
   5748                            -0.23795E-05
   5749                            -0.25365E-05
   5750                            -0.24522E-05
   5751                            -0.21689E-05
   5752                            -0.17146E-05
   5753                            -0.11309E-05
   5754                            -0.44290E-06
   5755                             0.30818E-06
   5756                             0.10991E-05
   5757                             0.18872E-05
   5758                             0.26492E-05
   5759                             0.33384E-05
   5760                             0.39291E-05
   5761                             0.43677E-05
   5762                             0.46238E-05
   5763                             0.46346E-05
   5764                             0.43637E-05
   5765                             0.37376E-05
   5766                             0.27138E-05
   5767                             0.12086E-05
   5768                            -0.82438E-06
   5769                            -0.34757E-05
   5770                            -0.67901E-05
   5771                            -0.10858E-04
   5772                            -0.15713E-04
   5773                            -0.21432E-04
1
```

```
***** ANSYS - ENGINEERING ANALYSIS SYSTEM  RELEASE 5.7.1   *****
ANSYS/Mechanical U
00251976          VERSION=INTEL NT      11:31:50  DEC 23, 2005 CP=   1166.469

 Point Beach Strainer Inner Rim Plate Analysis


 ***** POST1 TOTAL REACTION SOLUTION LISTING *****

 LOAD STEP=     4  SUBSTEP=    15
  TIME=    4.0000      LOAD CASE=   0

 THE FOLLOWING X,Y,Z SOLUTIONS ARE IN GLOBAL COORDINATES

   NODE       FX          FY          FZ
   5774                          -0.28022E-04
   5775                          -0.35529E-04
   5776                          -0.43909E-04
   5777                          -0.53150E-04
   5778                          -0.63126E-04
   5779                          -0.73734E-04
   5780                          -0.84723E-04
   5781                          -0.95856E-04
   5782                          -0.10671E-03
   5783                          -0.11686E-03
   5784                          -0.12567E-03
   5785                          -0.13248E-03
   5786                          -0.13637E-03
   5787                          -0.13640E-03
   5788                          -0.13137E-03
   5789                          -0.12006E-03
   5790                          -0.10097E-03
   5791                          -0.72649E-04
   5792                          -0.33419E-04
   5793                           0.18225E-04
   5794                           0.83896E-04
   5795                           0.16480E-03
   5796                           0.26197E-03
   5797                           0.37566E-03
   5798                           0.50548E-03
   5799                           0.64960E-03
   5800                           0.80482E-03
   5801                           0.96557E-03
   5802                           0.11238E-02
   5803                           0.12679E-02
   5804                           0.13825E-02
   5805                           0.14471E-02
   5806                           0.14362E-02
   5807                           0.13187E-02
   5808                           0.10579E-02
   5809                           0.61282E-03
   5810                          -0.59940E-04
1
```

```
***** ANSYS - ENGINEERING ANALYSIS SYSTEM  RELEASE 5.7.1   *****
ANSYS/Mechanical U
00251976          VERSION=INTEL NT      11:31:50  DEC 23, 2005 CP=   1166.469

 Point Beach Strainer Inner Rim Plate Analysis


 ***** POST1 TOTAL REACTION SOLUTION LISTING *****

 LOAD STEP=     4  SUBSTEP=    15
  TIME=    4.0000      LOAD CASE=   0

 THE FOLLOWING X,Y,Z SOLUTIONS ARE IN GLOBAL COORDINATES

   NODE       FX          FY          FZ
   5811                          -0.10020E-02
   5812                          -0.22471E-02
   5813                          -0.38118E-02
   5814                          -0.56830E-02
   5815                          -0.78036E-02
   5816                          -0.10058E-01
   5817                          -0.12266E-01
   5818                          -0.14195E-01
   5819                          -0.15619E-01
   5820                          -0.16389E-01
   5821                          -0.16418E-01
   5822                          -0.14821E-01
   6481   0.0000      0.0000      0.0000
   6482   0.0000      0.0000      0.0000
   6483   0.0000      0.0000      0.0000
   6484   0.0000      0.0000      0.0000
   6485   0.0000      0.0000      0.0000
   6486   0.0000      0.0000      0.0000
   6487   0.0000      0.0000      0.0000
   6488   0.0000      0.0000      0.0000
   6489   0.0000      0.0000      0.0000
   6490   0.0000      0.0000      0.0000
   6491   0.0000      0.0000      0.0000
   6492   0.0000      0.0000      0.0000
   6493   0.0000      0.0000      0.0000
   6494   0.0000      0.0000      0.0000
   6495   0.0000      0.0000      0.0000
   6496   0.0000      0.0000      0.0000
   6497   0.0000      0.0000      0.0000
   6498   0.0000      0.0000      0.0000
   6499   0.0000      0.0000      0.0000
   6500   0.0000      0.0000      0.0000
   6501   0.0000      0.0000      0.0000
   6502   0.0000      0.0000      0.0000
   6503 -0.60415     0.55360      0.0000
   6504   0.0000      0.0000      0.0000
   6505   0.0000      0.0000      0.0000
```

1

```
***** ANSYS - ENGINEERING ANALYSIS SYSTEM  RELEASE 5.7.1   *****
ANSYS/Mechanical U
00251976          VERSION=INTEL NT      11:31:50  DEC 23, 2005 CP=   1166.469

 Point Beach Strainer Inner Rim Plate Analysis


 ***** POST1 TOTAL REACTION SOLUTION LISTING *****

 LOAD STEP=     4  SUBSTEP=    15
  TIME=    4.0000      LOAD CASE=   0

 THE FOLLOWING X,Y,Z SOLUTIONS ARE IN GLOBAL COORDINATES

   NODE       FX          FY          FZ
   6506    0.0000      0.0000      0.0000
   6507    0.0000      0.0000      0.0000
   6508    0.0000      0.0000      0.0000
   6509    0.0000      0.0000      0.0000
   6510    0.0000      0.0000      0.0000
   6511    0.0000      0.0000      0.0000
   6512 -0.57255    -0.52465      0.0000
   6513    0.0000      0.0000      0.0000
   6514    0.0000      0.0000      0.0000
   6515    0.0000      0.0000      0.0000
   6516    0.0000      0.0000      0.0000

TOTAL VALUES
VALUE   -11.678      5.4525    -0.17659E-10

***** END OF INPUT ENCOUNTERED *****
```

```
NUMBER OF WARNING MESSAGES ENCOUNTERED=          1
NUMBER OF ERROR   MESSAGES ENCOUNTERED=          0


***** PROBLEM TERMINATED BY INDICATED ERROR(S) OR BY END OF INPUT DATA *****

*-----------------------------------------------------------------------*
|                                                                       |
|                          ANSYS RUN COMPLETED                          |
|                                                                       |
|-----------------------------------------------------------------------|
|                                                                       |
|          Release 5.7.1          UP20010418         INTEL NT           |
|                                                                       |
|-----------------------------------------------------------------------|
|                                                                       |
|   Maximum Scratch Memory Used       =     8647000 Words       32.986 MB |
|                                                                       |
|-----------------------------------------------------------------------|
|                                                                       |
|        CP Time      (sec) =       1166.484       Time  =  11:31:50    |
|        Elapsed Time (sec) =       2142.000       Date  =  12/23/2005  |
|                                                                       |
*-----------------------------------------------------------------------*
```

PCI PERFORMANCE CONTRACTING INC

intra-company correspondence

date November 2, 2005

to Distribution

from Gregg Hunter

phone 913-441-0100 x 3340

subject: Testing of Closed End Rivets and Pittsburg Seams

cc:

Performance Contracting, Inc., had testing performed on the strength of SS closed end rivets and the strength of Pittsburgh seams.

The tests performed are representative of the types of joints and fasteners that will be used for the supply of ECCS strainers.

PCI had several samples of each type prepared according to the drawings (attachment A and attachment B). The types of materials and their lot numbers are shown on the drawings.

PCI sent these samples to Lehigh Testing Laboratories in New Castle, Delaware for the required testing under PCI PO 5328 (Attachment C). Lehigh performed the tests and produced Test Reports E-48-34 Lot 1-1 thru 1-6, E-48-34 Lot 2-1 thru 2-6, E-48-34 Lot 3-1 thru 3-6 and E48-34 Lot 4-1 thru 4-6 (Attachment D).

PCI has summarized the reports as shown below.

Summary of Testing Data for Closed End Rivets and Pittsburg Seams

Test A1 22 gauge Pittsburg seamed to 22 gauge (All Perforated Plate)

EDGE SEAM TEST

	A1-A	A1-B	A1-C	
FORCE	397.8	421.2	483.6	(LBS.)

MODE OF FAILURE FOR ALL TESTS WAS EDGE SEAM PULLED OUT

Test A2 22 gauge Pittsburg seamed to 18 gauge (All Perforated Plate)

EDGE SEAM TEST

	A2-A	A2-B	A2-C	
FORCE	325.0	379.6	343.2	(LBS.)

MODE OF FAILURE FOR ALL TESTS WAS EDGE SEAM PULLED OUT

For tests A1 and A2 see drawing A and Lehigh Test Report E-48-34 Lot 1-1 thru 1-6

Test A1 22 gauge Pittsburg seamed to 22 gauge (All Perforated Plate)

LOCK SEAM TEST

	B1-A	B1-B	B1-C	
FORCE	709.8	631.8	517.4	(LBS.)

MODE OF FAILURE FOR ALL TESTS WAS EDGE SEAM PULLED OUT

Test A2 22 gauge Pittsburg seamed to 18 gauge (All Perforated Plate)

LOCK SEAM TEST

	B2-A	B2-B	B2-C	
FORCE	670.8	782.6	704.6	(LBS.)

MODE OF FAILURE FOR ALL TESTS WAS EDGE SEAM PULLED OUT

For tests B1 and B2 see drawing A and Lehigh Test Report E-48-34 Lot 2-1 thru 2-6

Test C1 22 gauge plate riveted to 22 gauge perforated plate

PLATE TO PERFORATED SHEET WITH 1/8" RIVET SHEAR

	C1-A	C1-B	C1-C	
FORCE	395.2	353.6	421.1	(LBS.)

MODE OF FAILURE FOR ALL TESTS WAS RIVET PULLED THROUGH FLAT SHEET

Test C2 18 gauge plate riveted to 18 gauge perforated plate

PLATE TO PERFORATED SHEET WITH 1/8" RIVET SHEAR

	C2-A	C2-B	C2-C	
FORCE	506.9	634.3	644.7	(LBS.)

MODE OF FAILURE

C2-A	RIVET PULLED THROUGH FLAT SHEET
C2-B	RIVET PULLED THROUGH PERFORATED SHEET
C2-C	RIVET HEAD PULLED OFF

For tests C1 and C2 see drawing B and Lehigh Test Report E-48-34 Lot 3-1 thru 3-6

Test D1 22 gauge plate riveted to 22 gauge perforated plate

PLATE TO PERFORATED SHEET WITH 1/8" RIVET AXIAL PULL

	D1-A	D1-B	D1-C	
FORCE	189.8	116.9	166.3	(LBS.)

MODE OF FAILURE FOR ALL TESTS WAS RIVET PULLED THROUGH FLAT SHEET

Test C2 18 gauge plate riveted to 18 gauge perforated plate

PLATE TO PERFORATED SHEET WITH 1/8" RIVET AXIAL PULL

	D2-A	D2-B	D2-C	
FORCE	350.8	291.0	267.6	(LBS.)

MODE OF FAILURE FOR ALL TESTS WAS RIVET PULLED THROUGH FLAT SHEET

For tests D1 and D2 see drawing B and Lehigh Test Report E-48-34 Lot 4-1 thru 4-6

This information may be used in the structural design of the ECCS strainers, but only for the types of materials and conditions as specified on the drawings (attachments A and B).

If you have any questions regarding this information, please contact me.

Thanks.

Gregg Hunter
ESD Plant Manager and Acting Technical Services Manager

1/8" closed end blind rivet - - shear test				
Sample No.	Head side material	Mandrel side material	Sample Width	Force at Failure
C1-A	22 ga perf	22 ga sheet	1"	
C1-B	22 ga perf	22 ga sheet	1"	
C1-C	22 ga perf	22 ga sheet	1"	
C2-A	18 ga perf	18 ga sheet	1"	
C2-B	18 ga perf	18 ga sheet	1"	
C2-C	18 ga perf	18 ga sheet	1"	
C3-A	16 ga perf	16 ga sheet	1"	
C3-B	16 ga perf	16 ga sheet	1"	
C3-C	16 ga perf	16 ga sheet	1"	

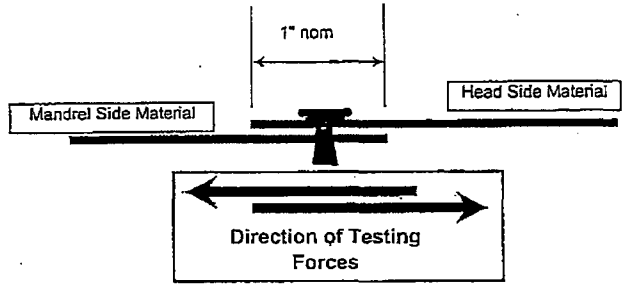

Shear Test

1/8" closed end blind rivet - - axial pull test				
Sample No.	Head side material	Mandrel side material	Sample Width	Force at Failure
D1-A	22 ga perf	22 ga sheet	1"	
D1-B	22 ga perf	22 ga sheet	1"	
D1-C	22 ga perf	22 ga sheet	1"	
D2-A	18 ga perf	18 ga sheet	1"	
D2-B	18 ga perf	18 ga sheet	1"	
D2-C	18 ga perf	18 ga sheet	1"	
D3-A	16 ga perf	16 ga sheet	1"	
D3-B	16 ga perf	16 ga sheet	1"	
D3-C	16 ga perf	16 ga sheet	1"	

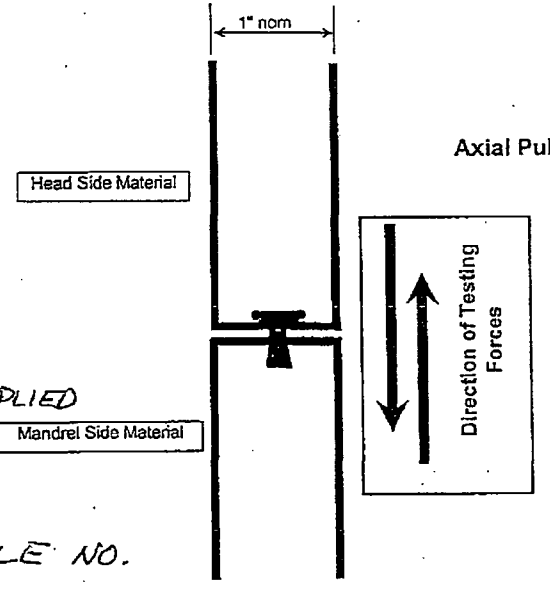

Axial Pull Test

Lot# List

18ga Perf LX-1479
18ga Plate LX-1449

22 ga Perf LX-1479
22 ~~18~~ ga Plate LX-1462
gm 10/12/05
1/8" Rivets BS-4824

16ga NA

NOTES:

1) 16 GA. SAMPLES TO BE SUPPLIED LATER.

2) 2 SAMPLES ARE BEING SUPPLIED FOR EACH SAMPLE NO. (USE SAMPLE 1 OF 2 FOR TESTS, SAMPLE 2 OF 2 CAN BE USED FOR SETUP).

Jh 10/12/05 Jhell 10/13/05

ATTACHMENT B
DRAWING B

1/1

Pittsburg Seam - - lock seam test				
Sample No.	Lock Seam Material	Edge Seam Material	Width of Sample	Force at Failure
A1-A	22 ga perf	22 ga perf	4"	
A1-B	22 ga perf	22 ga perf	4"	
A1-C	22 ga perf	22 ga perf	4"	
A2-A	22 ga perf	18 ga perf	4"	
A2-B	22 ga perf	18 ga perf	4"	
A2-C	22 ga perf	18 ga perf	4"	
A3-A	22 ga perf	16 ga perf	4"	
A3-B	22 ga perf	16 ga perf	4"	
A3-C	22 ga perf	16 ga perf	4"	

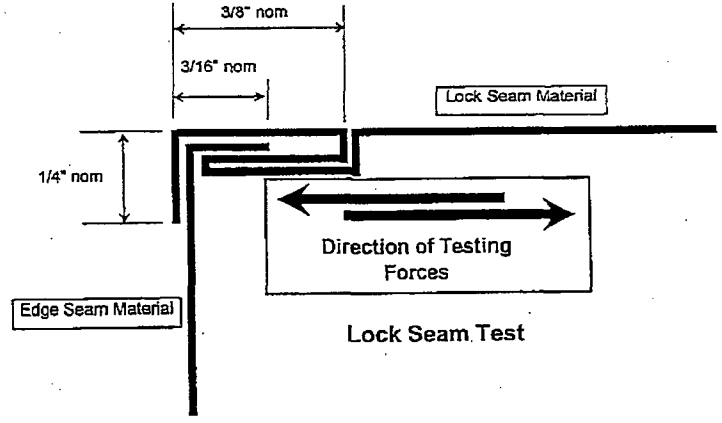

Lock Seam Test

Lot# List
18 ga Perf LX-1479
22 ga Perf LX-1479
16 ga Perf - NA

Pittsburg Seam - - lock seam test				
Sample No.	Lock Seam Material	Edge Seam Material	Width of Sample	Force at Failure
B1-A	22 ga perf	22 ga perf	4"	
B1-B	22 ga perf	22 ga perf	4"	
B1-C	22 ga perf	22 ga perf	4"	
B2-A	22 ga perf	18 ga perf	4"	
B2-B	22 ga perf	18 ga perf	4"	
B2-C	22 ga perf	18 ga perf	4"	
B3-A	22 ga perf	16 ga perf	4"	
B3-B	22 ga perf	16 ga perf	4"	
B3-C	22 ga perf	16 ga perf	4"	

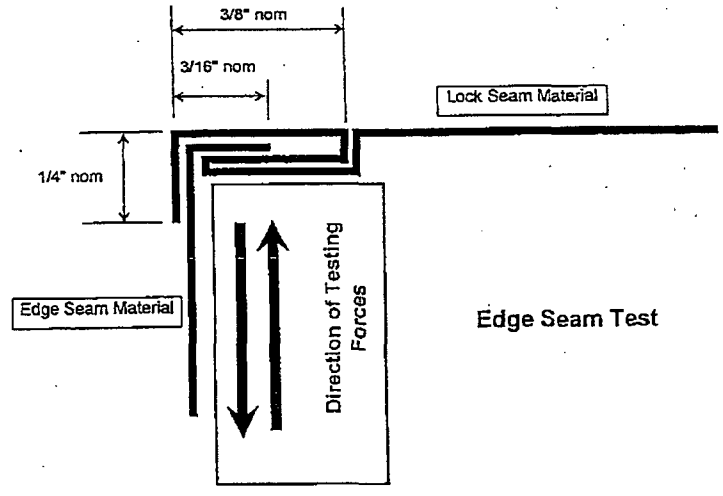

Edge Seam Test

NOTES:

1) 16 GA. SAMPLES TO BE SUPPLIED LATER.

2) 2 SAMPLES ARE BEING SUPPLIED FOR EACH SAMPLE NO. (USE SAMPLE 1 OF 2 FOR TESTS, SAMPLE 2 OF 2 CAN BE USED FOR SETUP).

10/12/05 10/13/05

ATTACHMENT A
DRAWINGS A
1/1

THICKNESS TOLERANCES PLATE

Permissible Variation in Thickness for Rectangular Carbon, High-Strength Low Alloy, and Alloy-Steel Plates, When Ordered to Thickness.

Note 1 — Permissible variation under specified thickness, 0.01 inch.

Note 2 — Thickness to be measured at 3/8 to 3/4 inch from the longitudinal edge.

Note 3 — For thickness measured at any location other than that specified in Note 2, the permissible maximum over tolerance shall be increased by 75%, rounded to the nearest 0.01 inch.

Tolerance Over Specified Thickness for Width in Inches

Specified Thickness Inches	Wt. Per Sq. Ft. In Lbs.	To 84" Excl.	84" To 96" Excl.	95" To 108" Excl.
3/16"	7.66	.03"	.03"	.03"
1/4"	10.21	.03"	.03"	.03"
5/16"	12.76	.03"	.03"	.03"
3/8"	15.32	.03"	.03"	.03"
7/16"	17.87	.03"	.03"	.03"
1/2"	20.42	.03"	.03"	.03"
9/16"	22.97	.03"	.03"	.03"
5/8"	25.53	.03"	.03"	.03"
3/4"	30.63	.03"	.03"	.04"
7/8"	35.74	.03"	.04"	.04"
1"	40.84	.06"	.06"	.07"

Source: ASTM A6, Table 1.

Hendrick

Sheet Thickness Tolerances

Stainless Steel				Lbs. Per Square Foot	
Gage	Mean of Gage	Min. of Gage	Max. of Gage	All 300 Series	All 400 Series
7	.1874	.1735	.2015	7.871	7.70
8	.1650	.1510	.1790	6.930	6.78
9	.150	.136	.164	6.300	6.165
10	.135	.129	.141	5.670	5.562
11	.120	.115	.125	5.040	4.944
12	.1054	.1004	.1104	4.427	4.342
13	.090	.0860	.094	3.780	3.708
14	.0751	.0711	.0791	3.154	3.094
15	.0673	.0643	.0703	2.826	2.766
16	.0595	.0565	.0625	2.499	2.451
17	.0538	.0508	.0568	2.259	2.211
18	.048	.045	.051	2.016	1.978
19	.042	.039	.045	1.764	1.726
20	.0355	.0335	.0375	1.491	1.463
21	.0324	.0304	.0344	1.360	1.33
22	.0293	.0273	.0313	1.231	1.207
23	.0264	.0249	.0279	1.1088	1.085
24	.0235	.0220	.0250	.987	.968
25	.0209	.0194	.0224	.8778	.8589
26	.0178	.0163	.0193	.748	.7315
27	.0165	.0150	.0180	.693	.6781
28	.0151	.0136	.0166	.634	.6206
29	.0138	.0123	.0153	.5796	.5671
30	.0125	.0110	.0140	.525	.5137

PCI
PERFORMANCE CONTRACTING INC

16047 W. 110th St.
Lenexa, KS 66219
Phone: 913-928-2804 - Fax: 913-928-2904

LETTER OF TRANSMITTAL

To: Curt Warchol

Date: 4/25/06

Subject:
Transmittal Number: 6003-04

Attention:

Gentlemen:

We are sending you [X] herewith [ ] under separate cover via _____

[ ] Prints [ ] Plans [ ] Material List
[ ] Vellums [ ] Details [X] Other - Describe: e-files

Sets	Type	Description
1	PDF	Modulus of Elasticity & Metallic Area

(If enclosures are not as noted kindly notify us at once)

These are transmitted as checked below:

[ ] For Preliminary Approval *(please return one set with notes and corrections)*
[x] For Final Approval
[ ] For Construction
[ ] For Fabrication
[ ] For Your Information Only
[ ] Other –

Remarks: _____

Copies To: Steve Yoder

Very truly yours,
Jon Householder
Jon Householder

Loos & Co., Inc.

Route 101, Pomfret, CT 06258

FAX

Date: 4-24-06

Number of pages including cover sheet: 1

To: Kevin Koelsch
Performance Contracting
16047 West 110th ST.
Lenexa KS. 66219

Phone: 913-928-2805
Fax phone: 913-928-2905
CC:

From: Gerry Baril
Product Eng.

Phone: 860-928-7981
Fax phone: 860-928-0880

REMARKS: ☐ Urgent ☑ For your review ☐ Reply ASAP ☐ Please comment

For our cable SF 25079
the metallic area is .031665 IN.^{2}
the modulus is 12.18×10^6 PSI

Jon Householder

From: Kevin Koelsch
Sent: Monday, April 24, 2006 4:02 PM
To: Tony Chiaverini; Jon Householder
Subject: Formal Transmittal to Curt at AES
Attachments: 46487.pdf; 46488.pdf

I received the following information from the wire rope manufacturer. Steve asked me to get you this information so that you can do a formal transmittal to Curt for Watts Bar / Sequoyah and Wolf Creek / Callaway. Curt needs the Modulus of Elasticity and the Metallic Area. The part number is included on the Sample Cert.

Kevin D. Koelsch
Associate Project Engineer
Performance Contracting Inc.
16047 W. 110th St.
Lenexa, KS 66219
P: 913-928-2805
F: 913-928-2905

LOOS & CO. INC.
Route 101, Pomfret, CT 06258
QA-410-15 Rev. 01/21/03

Product Certificate

Material Identification

Lot No:	1043187	Jacket Compound Lot:	N/A
Reel No(s):	1	Date of Manufacture:	03/20/2006

Order Information

Customer:		Date:	
Loos Sales Order:		Customer Order:	

Material

Loos Part Number:	SF25079	Amount Shipped:	
Customer Part Number:		Description:	1/4" 7X19
Specification:	MIL-DTL-83420M	Type:	Type I - Nonjacketed wire rope
Composition:	Composition B- Corrosion Resistant Steel	Customer Specification:	N/A

Heat	C	Mn	P	S	Si	Cr	Ni	Mo	Cu	N2	Ti
634666	0.069	1.31	0.03	0.007	0.39	18.47	8.05	0.3	0.47	0.021	
837324	0.069	1.28	0.03	0.002	0.39	18.35	8.12	0.24	0.34	0.028	

Physical Tests performed in accordance with:
MIL-DTL-83420M

Loos & Co. Inc. Final Insp. Procedure QA-2-8.2.4-02

If other, tested per or comments:

Physical Test Results

	Diameter	Marker	Min Break Strength (MBS) LBS	Break After Endurance LBS	Test load @ 80% MBS Accept/ Reject	Stretch @60%MBS % Max
Requirement:	Min:.250" Max:.268"	Identification Filament, Visual-Red & Yellow	6,400 lbs	3,840 lbs	No Broken Wires	[illegible]
Actual:	.2686"	Red & Yellow	7,237 lbs	5,024 lbs & 5,809 lbs	Accept	.99%
	Lubrication:	Lubricant Applied - Visual:Accepted				

Other: Weight of Coating,Test Elongation, etc. Data:	Minimum	Act. Low	Maximum	Act. High
N/A	N/A	N/A	N/A	N/A
N/A	N/A	N/A	N/A	N/A
N/A	N/A	N/A	N/A	N/A
N/A	N/A	N/A	N/A	N/A
N/A	N/A	N/A	N/A	N/A

Loos & Company, Inc. hereby certifies that materials, processes and tests in conjunction with the manufacture of the item(s) identified have been inspected and meet the requirements of all drawings, specifications and all other technical data pertinent to this order as detailed above. Test reports relating to the chemical and physical properties, analysis of material, certificates of process and test data, as applicable, (objective quality evidence) are on file in this office, subject to examination by contractor or government personnel upon request.

Manufactured in the U.S.A.

Alan Gibson
Quality Assurance Technician

Note: Assemblies / Cable are free from mercury contamination from any manufacturing processes at Loos & Co., Inc.

ATTACHMENT 3

Calculation Number:	PCI-5464-S02		
Calculation Title:	Structural Evaluation of Advanced Design Containment Building Sump Strainer Plenum		
Client:	Performance Contracting Inc.	**Station:** Watts Bar	
Project Number:	PCI-5464	**Unit(s):** 1	
Project Title:	Watts Bar Strainer Qualification		
Safety Related	Yes ☒ No ☐		

Revision	Affected Pages	Revision Description	Approval Signature / Date	Signature / Initials of Preparers & Reviewers
0	All	Initial Issue	Curtis J. Warchol 05/18/2006	Curtis J. Warchol (CJW) Scott T. Nelson (STN)
1	1-4, 10, 13, 19, 22 ,23, 25, 37, 42, 49-59, 61, 64-67, 69-80, 82-95 Attachment A Attachment B Attachment D	Revised to incorporate client comments and to reanalyze for dimensional changes to the structure	Curtis J. Warchol 06/02/2006	Curtis J. Warchol (CJW) Scott T. Nelson (STN)
2	1-4, 6, 12, 13, 16, 18, 26, 28, 29, 51, 54-58, 62-71, 74, 75, 78, 79, 83, 85, 88, 90, 92, 93, 94-98, Attachment F	Revised to incorporate as-built drawings and to incorporate additional client comments.	Curtis J. Warchol Curtis J. Warchol 08/08/2006	Curtis J. Warchol Curtis J. Warchol (CJW) Scott T. Nelson Scott T. Nelson (STN)

REVIEWER'S CHECKLIST FOR DESIGN CALCULATIONS SHEET 1 of 2

STATION: Watts Bar **NUCLEAR SAFETY RELATED: YES** ☒ **NO** ☐

PROJECT NO: PCI-5464 **CLIENT:** Performance Contracting Inc.

CALCULATION TITLE: Structural Evaluation of Advanced Design Containment Building Sump Strainer Plenum

CALC. NO: PCI-5464-S02 **CALC. REV. NO:** 2

INDICATE THE DESIGN INPUT DOCUMENTS USED:

TYPE OF DOCUMENT	DOCUMENT ID, REV AND/OR DATE	YES	N/A	COMMENT
1. **General Design Basis**	3, 9, 14, 18, 19, 21, 22	X		
2. **System Description**			X	
3. **Design information package from related equipment vendor**		X		
4. **Electrical Discipline Input**			X	
5. **Mechanical Discipline Input**			X	
6. **Control Systems Discipline Input**			X	
7. **Structural Discipline Input**	7, 12, 13, 15, 20, 23, 25	X		
8. **Specifications**	1, 2, 8	X		
9. **Vendor Drawings**	6	X		
10. **Design Standards**			X	
11. **Client Standards**	5	X		
12. **Checked Calculations**	4, 16, 17	X		
13. **Other (specify)**	10, 11 (AES QA Files)	X		

PREPARER'S SIGNATURE: Curtis J. Warchol DATE: 08/08/2006
Curtis J. Warchol

REVIEWER'S SIGNATURE: Scott T. Nelson DATE: 08/08/2006
Scott T. Nelson

APPROVER'S SIGNATURE: Curtis J. Warchol DATE: 08/08/2006
Curtis J. Warchol

REVIEWER'S CHECKLIST FOR DESIGN CALCULATIONS SHEET 2 of 2

PROJECT NO: PCI-5464

CALC. NO: PCI-5464-S02, Revision 1

REVIEWER TO COMPLETE THE FOLLOWING ITEMS:	YES	NO	N/A	COMMENT
1. Has the purpose of the calculation been clearly stated?	X			
2.. Have the applicable codes, standards and regulatory requirements been:				
A. Properly Identified?	X			
B. Properly Applied?	X			
3. Were the inputs correctly selected and used?	X			
4. A. Was Design Input Log used?		X		
B. If 4A is No, provide Manager's signature in Comment column to signify approval of Design Input Documents used in the calculation.				Curtis J. Warchol
5. Are necessary assumptions adequately stated?	X			
6. Are the assumptions reasonable?	X			
7. Was the calculation methodology appropriate?	X			
8. Are symbols and abbreviations adequately identified?	X			
9. Are the calculations:				
A. Neat?	X			
B. Legible?	X			
C. Easy to follow?	X			
D. Presented in logical order?	X			
E. Prepared in proper format?	X			
10. Is the output reasonable compared to the inputs?	X			
11. If a computer program was used:				
A. Is the program listed on the ASL and has the SRN been reviewed for any program use limitations?	X			
B. Have existing user notices and/or error reports for the production version been reviewed as appropriate?	X			
C. Were codes properly verified?	X			
D. Were they appropriate for the application?	X			
E. Were they correctly used:	X			
F. Was data input correct?	X			
G. Is the computer program and revision identified?	X			

TABLE OF CONTENTS

1.0 Purpose/Objective 5
2.0 Methodology 5
3.0 Acceptance Criteria 8
4.0 Assumptions 12
5.0 Definitions and Design Input 12
5.1 Material Properties 12
5.2 Strainer Geometry and Dimensions 14
6.0 Calculations 17
6.1 General Modeling Description 17
6.2 Applied Loads 18
6.3 GTSTRUDL Model 21
6.4 GTSTRUDL Results 51
6.5 Member Evaluation 61
6.6 Connection Evaluations 65
6.7 Anchorage Evaluation 85
7.0 Results and Conclusions 94
8.0 References 96

Attachment A – GTSTRUDL Input File (Plenum) ..... 1 - 30
Attachment B – GTSTRUDL Output File (Plenum) (Run date: Wed May 17 22:49:04 2006) ..... 1 - 631
Attachment C – GTSTRUDL Joint Number and Member Number Plots (Plenum) ..... 1 - 14
Attachment D – Excel Anchorage Evaluation ..... 1 - 20
Attachment E – Four Stick Model GTSTRUDL Output File (Run date: Thu May 18 17:53:26 2006) ..... 1 - 11
Attachment F – Channel to Support Beam Load Summary ..... 1 - 13

1.0 PURPOSE/OBJECTIVE

The purpose of this calculation is to qualify the Performance Contracting Inc. (PCI) Suction Strainer supporting structures (i.e., plenum) to be installed in Tennessee Valley Authority Watts Bar Nuclear Plant Unit 1. This calculation evaluates, by analysis, the PCI supplied supporting structures associated with the suction strainer modification. This includes such structures as the plenum box, the supporting beams, the sump cover plate, the anchorage to the floor, etc. The strainer modules themselves are evaluated in a separate calculation.

2.0 METHODOLOGY

The evaluations are performed using a combination of manual calculations and finite element analyses using the GTSTRUDL Computer Program. The evaluations follow the requirements of the TVA Design Specification for Sequoyah Nuclear Plant Unit 1 & 2 and Watts Bar Nuclear Plant Unit 1 for Advance Design Containment Building Sump Strainers, Specification No. SQN/WBN-DS-2005-063-001 (Reference [1]), as supplemented by two TVA letters (References [2] & [8]).

Seismic Loads

The strainer assemblies will be located in the space directly above and surrounding the existing sump pit at floor Elevation 702' - 9 3/8" of the Containment Building. The response spectrum required per Reference [2] is for the 703' elevation of the Reactor Building Interior Concrete.

According to the Design Specification (Reference [1]), the strainers and their supporting elements are required to meet the seismic analysis criteria contained in Appendix D to the Design Specification. The strainer assemblies are analyzed using the response spectra method using GTSTRUDL Version 25 software. The strainers are considered passive equipment and per Reference [2], the design should be based on seismic response spectra generated with 2% damping for the Operating Basis Earthquake (OBE) and 3% damping for the Safe Shutdown Earthquake (SSE). These are conservative damping values for bolted steel structures.

The strainer assemblies are excited in two horizontal and one vertical direction. An enveloping response spectra which bounds the response spectra from the N/S and E/W directions is used in each direction parallel to the geometric axes of the plenum. The results from the worst case horizontal and vertical seismic cases are combined by absolute summation.

The modal combination is performed by the statistical method (SRSS combination) as per Appendix D of the TVA Design Specification (Reference [1]). The seismic stresses of closely spaced modes (within 10%) are combined by SRSS. Therefore, the TPM (Ten Percent Method) of GTSTRUDL is used for the modal combination. The cutoff frequency is taken at 33 Hz. Zero Period Acceleration (ZPA) residual mass effects for frequencies above 33 hz are considered and combined with the response spectra results by absolute summation.

Operating Loads

Operating loads are comprised of weight and pressure loads. The weight of the strainer includes the weight of the strainer self weight and the weight of the debris which accumulates on the strainer. The debris weight is taken from Reference [23].

The pressure load acting on the substructure is the differential pressure across the plenum boundary plates. Conservatively, this is taken as the hydrostatic pressure associated with the maximum allowed head loss through the debris covered strainers as defined in Section 6.2.1.

Both normal operating thermal and accident expansion loads are considered in the design. The strainers modules and plenum are free to expand in the vertical direction without constraint. In the lateral direction, the stainless steel plenum expands as it gets hot, however the plenum is anchored to the concrete floor which expands much less due to the difference in the coefficient of thermal expansion. This restricts the expansion of the plenum inducing thermal stresses into the structure. The impact of the thermal constraint is minimized by the use of slotted holes and strategic placement of the anchors.

Software

MathCad software is used to generate the calculations. All MathCad calculations are independently verified for accuracy and correctness as if they were manually generated. GTSTRUDL Version 25 is used in the seismic response spectra analysis of the substructure assembly. GTSTRUDL Version 25.0 is verified and validated under the AES QA program as documents in the AES validation and maintenance file (Reference [10]). The validation of GTSTRUDL was a partial validation and only validated certain commands. These commands are listed in the validation report. The GTSTRUDL runs utilize several commands outside the scope of this validation. A list of these commands, and their alternate validation method used for this particular application, is provided below:

Command	Validation Method
GENERATE REPEAT	The GENERATE and REPEAT commands are used to automatically generate member nodes and incidences. These generated items for these models are verified manually.
DEFINE GROUP	This command groups members and/or joints together for easier specification of member properties and load placements. This command is verified by checking manually that the cross sections and loads are applied properly to each member.
DELETIONS ADDITIONS ACTIVE INACTIVE	These commands simply control how the program reads and processes upcoming commands. It is easily verifiable by reviewing the computer output to ensure the results are as expected.

Command	Validation Method
MEMBER ADDED INERTIA	This command is used to apply the weight of the certain strainer components not directly included in the model on to members that would carry their weight for a certain direction of seismic response. This command was verified manually by listing the dynamic mass summary and comparing the total dynamic mass in each direction to the calculated total mass.
TABLE 'MYCHAN' TABLE 'RBARS' TABLE 'MYW'	'MYCHAN', 'RBARS', and 'MYW' are user defined GTSTRUDL tables that contain steel cross sections for channel, rectangular, and wide flange shapes not available in the predefined GTSTRUDL tables. The members that are defined by these tables are subjected to loadings and then code checked in GTSTRUDL. These tables are verified by printing out the properties for one member of each type and manually verifying that the properties are correct.
STIFFNESS MATRIX	Stiffness matrices are used to represent the strainer assemblies. The use of these special member properties are verified by benchmarking the strainer "stick model" with the full "stack model" and comparing stiffness and frequency. In this manner the stick model which uses the stiffness matrices is proven to be equivalent to the full model. See Section 6.3.3 for a detailed description on the use of stiffness matrices.
JOINT TIES SLAVE RELEASES	The JOINT TIES and SLAVE RELEASES commands are used for the top cover plate such that the plate can act as a single unit. Joint ties are used to tie the top cover plate nodes to the hex couple nodes. The slave releases command then releases the moments. In this way the plate is restrained by the hex couplings for all three translations, but is free to rotate relative to the hex couplings. Use of these commands is acceptable because the nodal displacements are manually compared for these nodes to confirm the command is working as planned.
MEMBER TEMPERATURE LOADS	This command applies a specified temperature increase/decrease to the model. This command is manually verified by running unrestrained test runs and comparing the overall GTSTRUDL calculated displacements to the manually calculated displacements.

The limitations and program error reports for GTSTRUDL Version 25 (Reference [10]) were reviewed for applicability to the GTSTRUDL runs made for this calculation. The limitations for the 78AISC Code check were found not to be applicable for this calculation (none of the components are subjected to significant torsion, therefore warping torsion stresses would be negligible, and the other limitations deal primarily with structural angle shapes which are not included in this model).

3.0 ACCEPTANCE CRITERIA

The strainer substructure assembly shall meet the requirements of the codes, standards and regulations listed in Section 3.1 of TVA Design Specification SQN/WBN-DS-2005-063-001, (Reference [1]) as supplemented by TVA Letter Numbers 30M532 and 30M536 (References [2] & [8]). Section 3.1 of the Design Specification states that the equipment shall be designed in accordance with the AISC 7th Edition (Reference [9]), therefore the acceptance criteria will primarily be in accordance with this code. In circumstances where the AISC Code does not provide adequate guidance for a particular component, other codes or standards are used for guidance. These alternate codes are discussed briefly below.

The AISC Code does not specifically cover stainless steel materials. Since the strainer substructure assembly is fabricated entirely from stainless steel, the ANSI/AISC N690-1994, "Specification for the Design, Fabrication, and Erection of Steel Safety Related Structures for Nuclear Facilities", Reference [21] is used to supplement the AISC in any areas related specifically to the structural qualification of stainless steel. Note that only the basic acceptance criteria (allowable stresses) are used from this Code and load combinations and allowable stress factors for higher service level loads are in accordance with Reference [8].

Also, SEI/ASCE 8-02, "Specification for the Design of Cold-Formed Stainless Steel Structural Members", (Reference [22]) is used for stainless steel bolting allowables since these allowables are not provided by the AISC codes. The rules for Allowable Stress Design (ASD) as specified in Appendix D of this code are used. Finally guidance is also taken from AWS D1.6, "Structural Welding Code - Stainless Steel", (Reference [19]) as it relates to the qualification of stainless steel welds. Detailed acceptance criteria for each type of strainer component is provided in the sections below.

Load Combinations

The applicable load combinations are taken from the Appendix E of the Design Specification (Reference [1]) as supplemented by Reference [8]. The primary governing code for the strainers is AISC 7th Edition. As per Appendix E of the Design Specification (Reference [1]) the structural analysis of the strainers, supports and associated equipment shall considered the following design basis loads.

1. DW - Dead Weight Loads and forces .
2. TOL - Thermal Effect Loads during normal operation (loads imposed by normal operating temperatures, conservatively taken at 140 degrees F).
3. OBE - Seismic Loads generated by the operating basis earthquake.
4. SSE - Seismic Loads generated by the safe shutdown earthquake.
5. TAL - Thermal Effect Loads during accident operation (loads imposed by accident operating temperatures, taken as the maximum water temperature of 190 degrees F).
6. JIL - Jet Impingement equivalent static load (if applicable) (JIL = 0 for WBN).
7. DIL - Debris Impact equivalent static load (if applicable) (DIL = 0 for WBN).
8. DP - Differential pressure across perforated plates and other pressure boundaries.
9. DEB - Debris weight.

The required load combinations are defined in Reference [8] as:

Load Condition	Combination	Allowable	
Load Combination 1	DW + DEB + DP	1.0 S	Notes 1, 4, 5, 7
Load Combination 2	DW + OBE	1.0 S	Notes 1, 6, 7
Load Combination 3	DW + TOL + OBE	1.5 S	Notes 1, 6, 7
Load Combination 4	DW + TOL + SSE	1.6 S	Notes 1, 6, 7
Load Combination 5	DW + DP + DEB + TAL	1.6 S	Notes 1, 4, 5, 6, 7
Load Combination 6	DW + JIL + DIL + SSE	1.6 S	Notes 1, 2, 3, 6, 7

Per Note 3, JIL and DIL are not applicable. Thermal loads, TOL and TAL, are negligible for the strainers as described in Section 2.0. Therefore, only Load Combinations 1, 2, and 6 require detailed evaluation, and Load Combination 6 reduces simply to DW + SSE.

Notes:

1. For structural steel, the "S" value is the required section strength based on the elastic design methods and allowable stresses defined in Part 1 of the AISC specification, Seventh Edition, referenced in Section 3.0 of the Design Specification (Reference [1]). The 33 percent increase in the allowable stresses for steel due to seismic or wind loadings permitted by the AISC standard shall not be applied to this evaluation. When alternate codes used for guidance, the "S" value is defined consistently as described above, except that the standard allowable stresses are taken from these other codes. Additional detail for each type of component is provided below.

   For perforated plates, the "S" value is the allowable stress from the ASME Section III Boiler and Pressure Vessel Code, Section III, 1989 Edition including Appendix A, Article A-8000 provisions for calculating perforated plate stresses.

   For concrete anchor bolt, the tensile and shear forces shall not exceed the allowable loads for the selected anchor bolts in TVA DS-C1.7.1 (Reference [5]). TVA concurrence with anchor bolt selection is required. Thermal stresses on anchor bolts shall be considered and minimized by the design.

2. The AISC allowable stresses for Load Combination 6 shall not exceed the following limits (excluding perforated plate)

$0.9x\ S_y$	for Tension or Bending Stress
$(0.9x\ S_y) / (3.0)^{0.5}$	for Shear Stress
$0.9x\ S_{cb}$	for Compression Stress

   where S_y = minimum specified yield strength of the material, and
   S_{cb} = the critical buckling compressive stress calculated by the AISC equations without the appropriate factor of safety.

3. The Jet impingement load (JIL) and debris impact load (DIL) are negligible for the final strainer design.

4. The differential pressure (DP) shall be the larger of 3.5 feet of water or the design basis head loss as determined by the evaluation performed in response to Section 7.4 of the Specification (Reference [1]).

5. Debris weight shall be considered for Load Combination 1 and 5. The debris weight on the strainer shall be the larger of 25 pounds per square foot applied to the total strainer/flow plenum horizontal footprint, or the maximum calculated debris weight transported to the strainer under design basis conditions.

6. Per Reference [2] and [8], the design and licensing basis of the Watts Bar containment sump intake structures does not require the consideration of a seismic event during recovery from a design basis accident. As the containment sump strainers will only be underwater during the recovery from a design basis event, seismic / structural qualification of the advanced strainers in the flooded condition is beyond the current design and licensing basis of the plant. As such, the hydrodynamic effects of a seismic event which occurs when the strainers are underwater need not be included in the structural evaluation.

7. Per Reference [21], because stainless steel does not display a single, well defined modulus of elasticity, the allowable compression stress equations from the AISC are not applicable for stainless steels. Therefore, the allowable compression stress will be based on the lower allowables from Reference [21] as opposed to those provided in the AISC Code (Reference [9]). Per Q1.5.9.2 of Reference [21], the allowable stresses for tension, shear, bending and bearing for stainless steel can be taken as the same allowables provided for carbon steel, therefore the AISC 7th Edition will be used for allowables for these types of stresses.

GTSTRUDL Code Check

Most support components are qualified using the GTSTRUDL code check features. The GTSTRUDL AISC 7th Edition Code check is not QA verified in AES's QA program, therefore the AISC 8th Edition Code check is used (78AISC). A code reconciliation was performed between the 7th and 8th editions to identify any differences that could affect the results. Although there are differences between the two codes, by reviewing the code provisions checked with regards to the types of members in the model (channels, rods, and bars), there are no significant differences between the AISC 7th Edition requirements and the evaluation performed by GTSTRUDL using the AISC 8th Edition. Therefore, the use of the 8th Edition Code check feature of GTSTRUDL is acceptable for this application with the exception of the allowable compression stress as described above. The effective buckling length factor, K, will be manually adjusted to account for the lower compression stress allowable. See Section 6.5.8 for additional discussion. Load Combinations 1 & 2, and 3 & 4 will be grouped into one code check for each pair to envelope both load combinations.

The parameter "Code Tolerance" is used in GTSTRUDL to allow for the higher stresses associated with the various load combinations. This parameter is used to only flag members with an interaction ratio higher than a certain threshold as a failing member. In this way, if a particular member is only 10% overstressed from standard AISC allowables, it is not flagged as a failing member if the Code Tolerance is higher the 0.10. Based on the allowable stressed defined above, the Code Tolerances are calculated as follows:

$$CT := \begin{pmatrix} 1-1 \\ \min(1.5-1, 1.6-1) \\ 1.6-1 \\ \min\left(1.6, \frac{0.9S_y}{0.66\cdot S_y}, \frac{0.9S_y}{0.4\cdot\sqrt{3}\cdot S_y}, \frac{0.9}{\frac{12}{23}}\right)-1 \end{pmatrix} \qquad CT = \begin{pmatrix} 0.00 \\ 0.50 \\ 0.60 \\ 0.30 \end{pmatrix} \begin{matrix} \text{L.C. \# 1/2} \\ \text{L.C. \# 3/4} \\ \text{L.C. \# 5} \\ \text{L.C. \# 6} \end{matrix}$$

where 0.66 Sy is taken as the worst case bending stress allowable for the types of members used, and 12/23 is taken as the standard code factor of safety against buckling. For rectangular cross section members, due to the weak axis bending allowable of 0.75, the code tolerance is further restricted and taken as:

$$CT_{rect} := CT$$

$$CT_{rect_4} := \frac{0.9\cdot S_y}{0.75\cdot S_y} - 1 \qquad CT_{rect} = \begin{pmatrix} 0.00 \\ 0.50 \\ 0.60 \\ 0.20 \end{pmatrix} \begin{matrix} \text{L.C. \# 1/2} \\ \text{L.C. \# 3/4} \\ \text{L.C. \# 5} \\ \text{L.C. \# 6} \end{matrix}$$

4.0 ASSUMPTIONS

None

5.0 DEFINITIONS AND DESIGN INPUT

Define, $ksi \equiv 10^3 \cdot psi$ $kips \equiv 10^3 \cdot lbf$ $kPa := 1000 \cdot Pa$ $ORIGIN \equiv 1$

5.1 Material Properties

Material Types per Reference [6]:

Strainer Modules:	Stainless Steel Type 304 (See Reference [4] for additional details)
Plate Materials:	Stainless Steel ASTM A-240, Type 304
Structural Shapes:	Stainless Steel ASTM A-240, Type 304
Bolting:	Stainless Steel ASTM A-193, Grade B8, Class II
Studs:	Stainless Steel ASTM A-276, Type 304, Condition B
Nuts and Washers:	Stainless Steel ASTM A-194, Grade 8, Class II
Expansion Anchors:	Stainless Steel Hilti Kwik-Bolt III

Design Temperature (Reference [8]) $T_{AL} := 190 \cdot F$

Max Operating Temperature (Reference [8]) $T_{OL} := 140 \cdot F$

Since AISC (Reference [9]) does not provide material properties at elevated temperatures, the ASME Code (Reference [3]) is used to determine material properties at elevated temperatures. Properties are defined for three temperatures as shown below.

All Type 304 Steels (Reference [3])	100 degrees F	140 degrees F	190 degrees F
Modulus of Elasticity (Table I-6.0),	$E_{sc} := 28300 \cdot ksi$	$E_{so} := 27925 \cdot ksi$	$E_{sa} := 27650 \cdot ksi$
Yield strength (Table I-2.2)	$S_{yc} := 30.00 \cdot ksi$	$S_{yo} := 28.00 \cdot ksi$	$S_{ya} := 25.50 \cdot ksi$
Ultimate Strength (Table I-3.2)	$S_{uc} := 75.0 \cdot ksi$	$S_{uo} := 73.4 \cdot ksi$	$S_{ua} := 71.4 \cdot ksi$
ASME Allowable Stress (Table I-7.2)			$S := 17.9 \cdot ksi$

Bolts and Studs (A-193, Grade B8, Class II or A-276, Type 304 Condition B)

S_{yb} - Yield strength (Ref. [14] & [24]), $S_{yb} := 100 \cdot ksi$

S_{ub} - Ultimate Strength (Ref. [14] & [24]) $S_{ub} := 125 \cdot ksi$

Allowable stresses for bolts and studs are taken from Reference [22] and are similarly scaled down for elevated temperature effects in Section 6.6.

Other Miscellaneous Properties

Density of stainless steel from Reference [20], $\rho_{steel} := 501 \cdot \frac{lbf}{ft^3}$ $\rho_{steel} = 0.290 \frac{lbf}{in^3}$

Poisson's Ratio of stainless steel from Reference [20], $\nu := 0.305$

Shear Modulus at 190 °F $G_s := \frac{E_{sa}}{2 \cdot (1 + \nu)}$ $G_s = 10594\ ksi$

Density of water at 40 degrees F from Reference [12] $\gamma_{H20} := 62.43 \cdot \frac{lbf}{ft^3}$

Mean Coefficient of Thermal Expansion (CTE) of stainless steel, (going from 70°F to 190°F (Table I-5.0 of Ref. [3]) $CTE_{ss} := 8.77 \cdot 10^{-6} \cdot \frac{in}{in \cdot F}$

Coefficient of Thermal Expansion (CTE) of concrete, (going from 70°F to 140°F (Section 8.3 of Reference [11]) $CTE_{con} := 5.5 \cdot 10^{-6} \cdot \frac{in}{in \cdot F}$

Tensile strength of weld filler metal for ER308 or ER308L electrodes (Reference [19]) $S_{uw} := 75 \cdot ksi$

5.2 Strainer Assembly Geometry and Dimensions

All data are per Ref. [6] unless otherwise noted. Also see Reference [4] for more detailed dimensional data for the strainer modules

Strainer Dimensions (Ref. [6o] & [6p])

Strainer disk size

$L1_{disk} := 28.0 \cdot in$

$L2_{disk} := 28.0 \cdot in$

$L1_{hex} := 28.75 \cdot in$

$L2_{hex} := 28.75 \cdot in$

Number of disks per strainer module

$N_{disk} := \begin{pmatrix} 6 \\ 7 \end{pmatrix}$

Core Tube Size

$OD_{tube} := 13.25 \cdot in$

$t_{tube} := 0.0595 \cdot in$

(16 ga. per Ref. [6o] & [6p])

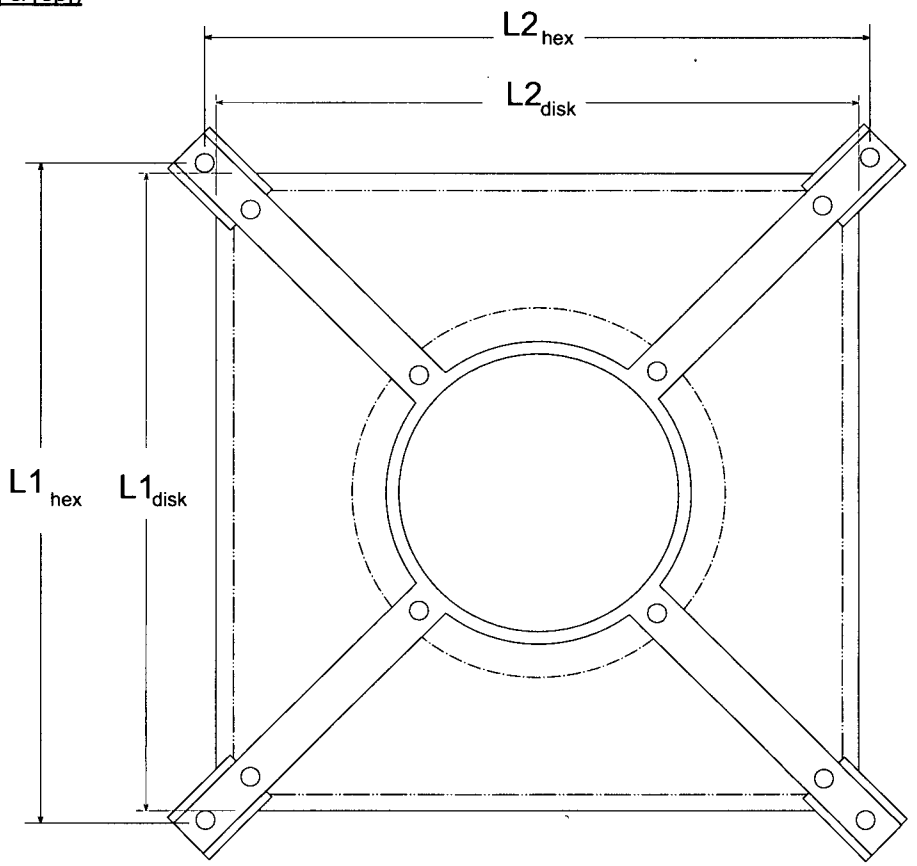

Figure 5.2-1 - Top view of Strainer Module

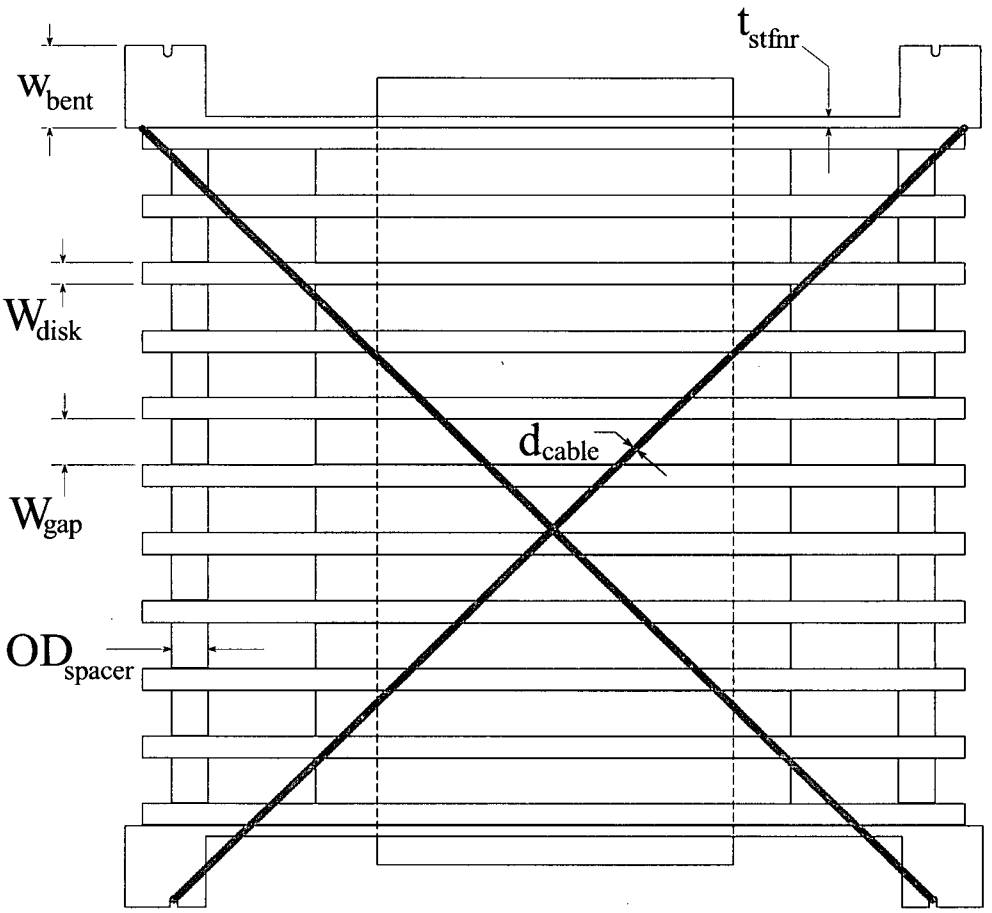

Figure 5.2-2 - Side view of Strainer Module

Plenum Dimensions

Thickness of Lower Deck Plate	$t_{ldp} := 0.5 \cdot in$	(Ref. [6u])
Thickness of Top Cover Plate	$t_{tcp} := 0.5 \cdot in$	(Ref. [6x])
Thickness of Seal Strip Plate	$t_{strip} := 0.375 \cdot in$	(Ref. [6v]&[6aa])
Width of Seal Strip Plate	$w_{strip} := 6 \cdot in$	(Ref. [6aa])
Nominal diameter of connecting bolts and studs	$OD_{bolt} := 0.5 \cdot in$	(Ref. [6o]&[6p])
Maximum hole diameter in top cover plate	$D_h := 5.5 \cdot in$	(Ref. [6x])
Depth of Floor Beam	$d_{beam} := 6 \cdot in$	(Ref. [9])
Floor Beam Flange Thickness	$t_{fb} := 0.26 \cdot in$	(Ref. [9])
Floor Beam Web Thickness	$t_{wb} := 0.23 \cdot in$	(Ref. [9])

Overall Strainer Assembly Dimensions (Ref. [6a])

Gap between strainer modules in the Z-direction	$g_{sz} := 4 \cdot in$	
Gap between strainer modules in the X-direction	$g_{sx} := 4 \cdot in$	
Number of modules in the z-direction	$N_z := 3$	
Number of modules in the x-direction	$N_x := 9$	
Number of modules	$N_{mod} := \begin{pmatrix} 42 \\ 41 \end{pmatrix}$	(6 disk) (7 disk)

Additional Calculated Dimensions

Width of strainer module section in the X-direction	$W1 := L1_{disk} + g_{sx}$	$W1 = 32.00\ in$
Width of strainer module section in the Z-direction	$W2 := L2_{disk} + g_{sz}$	$W2 = 32.00\ in$
Spacing between hex couplings	$w_{hex.x} := W1 - L1_{hex}$	$w_{hex.x} = 3.25\ in$
	$w_{hex.z} := W2 - L2_{hex}$	$w_{hex.z} = 3.25\ in$

6.0 CALCULATIONS

6.1 General Modeling Description

Several GTSTRUDL models are used to analyze different aspects of the strainer assemblies. These are described below:

Four Stack Model (one 7 disk module and three 6 disk modules)

The four stack model is composed of one 7 disk strainer module, and three 6 disk strainer modules stacked on top of one another. This is the GTSTRUDL model used in Reference [4] to analyze the individual strainer modules. A full response spectra analysis is performed on this model in Reference [4] and the results are used to qualify the different parts of the strainer module such as the core tube, the radial stiffeners, the connecting rods, the edge channels, etc. Additional load cases were run for that model in Reference [4] which are used in this calculation to determine and equivalent stiffness matrix in Section 6.3.3.

Four Stick Model (one 7 disk module and three 6 disk modules)

The stiffness matrix developed from the four stack model is used to generate a four stick model. This model is essentially used to represent the four stack model in a condensed version. It is used to benchmark against the full four stack model to ensure that the stiffness matrix is correct. It is only used for benchmarking purposes.

Full Strainer Assembly Model (includes substructure (plenum))

The full assembly model includes the substructure that supports the strainer modules and the strainer modules themselves. Stick models are used to represent the strainer module stacks to account for the proper mass and stiffness of the strainer stacks. The full model is used in this calculation to qualify the substructure (plenum).

Note that unit loads are run on the full model to determine the stiffness of the plenum. From these displacement cases, the springs are used in the 4 stack model to account for the flexibility of the plenum. In general, the plenum is very stiff in the Y and Z direction, but does have some flexibility in the X-direction.

6.2 Applied Loads

The loads on the strainer assembly are comprised of weight, pressure, and dynamic loads. The applicable loads and load combinations are described in Section 3.0.

6.2.1 Pressure Loads

The pressure load during accident conditions when the strainers are covered with debris (DP). This is conservatively based on the maximum allowable hydrostatic pressure drop across the debris covered strainers. Per Reference [8] this is to be taken as the maximum of 3.5 feet of water or the calculated head loss across the debris covered strainers. Per Reference [16] the head loss is much less than 3.5 feet of water, therefore the 3.5 feet of water controls.

$DP := 3.5 \cdot ft \cdot \gamma_{H20}$ (Reference [16] and [8]) $DP = 1.52\,psi$

6.2.2 Weight Loads

Weight loads consists of the dead weight of the steel that makes up the modules and the plenum, and the weight of the debris that accumulates on the strainer modules following an accident. The weight of the plenum members is calculated internally by GTSTRUDL and is included in the GRAVITY load case. The weight of the strainer modules is calculated in Reference [4] and is summarized below. The weight of the end cover is separated out because the end cover weight only applies for the top module for any given stack of modules.

$Wt := \begin{pmatrix} 197 \\ 225 \end{pmatrix} \cdot lbf$ 6 Disk Module / 7 Disk Module $Wt_{ec} := 10 \cdot lbf$

These weights are lumped onto the module stick models that represent the strainer modules as discussed in Section 6.3.3.

The weight of the debris per strainer module used in the analysis is is shown below. These values are slightly higher than the actual debris weights calculated in Reference [17]. This weight is included in the GTSTRUDL model and is spread out over the surface area of the perforated plate. These values far exceeds the 25 pounds per square foot minimum weight specified in Reference [8].

$WD := \begin{pmatrix} 258 \\ 303 \end{pmatrix} \cdot lbf$ 6 Disk Module / 7 Disk Module (Reference [17]) (actual values from Reference [17] are 239 lbf for the 6-disk module, and 280 lbf for the 7-disk module. Use of these higher weights is conservative)

6.2.3 Thermal Loads

Since the stainless steel plenum assembly will be installed at approximately 70°F, then subsequent increases in environmental temperature may induce thermal stresses in the assembly and thermal reaction loads onto the anchor bolts. Two thermal conditions are evaluated including, TOL (maximum normal operating temperature of 140°F) and TAL (accident temperature of 190°F) per Reference [1] and [8].

During normal operation, the concrete base structure will be at the same temperature as the steel strainer assembly because the operating condition is sustained. However, concrete has a smaller coefficient of thermal expansion than stainless steel, resulting in differential movement between the steel and concrete. The difference between coefficients of thermal expansion for stainless steel and concrete is:

$CTE_{TOL} := CTE_{ss} - CTE_{con}$ $\qquad CTE_{TOL} = 3.27 \times 10^{-6} \frac{in}{in \cdot F}$

At accident conditions, the plenum steel may heat up faster than the base concrete structure, due to the rapid increase in temperature following an accident. Also, due to the thickness of the concrete, there will be a temperature gradient through the thickness of the concrete which will also limit the expansion of the concrete. For these reasons, only a partial expansion of the concrete is considered. To account for this, the coefficient of thermal expansion for the concrete is conservatively taken as only 1/2 the actual coefficient of thermal expansion.

$CTE_{TAL} := CTE_{ss} - \frac{CTE_{con}}{2}$ $\qquad CTE_{TAL} = 6.02 \times 10^{-6} \frac{in}{in \cdot F}$

The normal thermal growth of an unrestricted plenum assembly is $\Delta = (CTE)(\Delta T)(L)$.

For the X-direction along the longest Beam

$\Delta_{TOL.X} := CTE_{TOL} \cdot (T_{OL} - 70 \cdot F) \cdot (96 \cdot in)$ $\qquad \Delta_{TOL.X} = 0.022\ in$

$\Delta_{TAL.X} := CTE_{TAL} \cdot (T_{AL} - 70 \cdot F) \cdot (96 \cdot in)$ $\qquad \Delta_{TAL.X} = 0.069\ in$

For the Z-direction along the longest length of the assembly

$\Delta_{TOL.Z} := CTE_{TOL} \cdot (T_{OL} - 70 \cdot F) \cdot (304 \cdot in)$ $\qquad \Delta_{TOL.Z} = 0.070\ in$

$\Delta_{TAL.Z} := CTE_{TAL} \cdot (T_{AL} - 70 \cdot F) \cdot (304 \cdot in)$ $\qquad \Delta_{TAL.Z} = 0.220\ in$

These thermal expansion cases are included in the GTSTRUDL model by inputting the associated temperature changes and coefficients of thermal expansion into the analysis and letting GTSTRUDL calculated thermal reactions and thermal stresses based on the geometry of the model.

6.2.4 Seismic Inertia Loads

A response spectra analysis is performed to analyze the seismic inertia loads. The response spectra are taken from Reference [2]. The 2% damping spectra at Elevation 703' is used for the OBE load case, and the 3% damping spectra is used for the SSE case. For the horizontal direction, an enveloped spectra was determined in Reference [4] that envelopes the E-W and N-S spectra. This same enveloped spectra is used here for the plenum evaluation. The seismic loads are discussed in greater detail in Section 2.0 and in Reference [4].

6.3 GTSTRUDL Model

6.3.1 General Description

The analysis of the strainer substructure is performed using GTSTRUDL. The substructure (plenum) is modeled in GTSTRUDL including all structural members and the top and bottom cover plates. The strainer module stacks are also included in this model using stiffness matrices to represent the strainer modules with simple stick models. The strainer stiffness matrices are determined by using the detailed strainer module model to solve for equivalent stiffness matrices to represent the actual stiffness of the modules. The module weight, or masses are lumped at the intermediate nodes of the stick model at the ends of rigid links of a particular distance off the centerline of the module to accurately represent the mass distribution of the strainer modules. The strainer stick models are attached on top of the substructure model and a response spectra analysis is performed for the combined assembly to accurately determine the resulting forces in the substructure assembly. A detailed description of the stick model development is included in Section 6.3.3. Pressure loads are also applied to the substructure to qualify the structures to resist operating differential pressure between the outside and inside of the plenum. A code check is performed in GTSTRUDL to evaluate members to AISC acceptance criteria for both the seismic and operating condition load combinations.

The GTSTRUDL model is made up of several different types of members split into groups. The group names and actual member names for each type are shown in the table below (rigid links and strainer modules are not included here, but are discussed later):

Member Type	Group Name	Member Numbers
Support Beams	'BEAM'	'BEAM1' TO 'BEAM 12', 'BEAM14' TO 'BEAM29'
Bottom Plates (Lower Deck)	'PLATE1'	'PLATE1', 'PLATE3', 'PLATE4' TO 'PLATE16' BY 4, 'PLATE23' TO 'PLATE31' BY 4, 'PLATE7' TO 'PLATE19' BY 4, 'PLATE22' TO 'PLATE30' BY 4, 'PLATE33'
	'PLATE2'	'PLATE2' TO 'PLATE18' BY 4, 'PLATE20' TO 'PLATE32' BY 4, 'PLATE5' TO 'PLATE29' BY 4 'PLATE35' 'PLATE36'
Pit Spanning Beams	'PLATE3'	'PLATE38' TO 'PLATE41'
Top Plates	'TCPLAT' 'TCPLAT1' 'TCPLAT2'	'TCPL1' TO 'TCPL12', 'TCPL15' TO 'TCPL95' (excl 19) 'TCPL96' TO 'TCPL123' 'TCPL13' 'TCPL14' 'TCPL124' TO 'TCPL131'
Plenum Box Channels	'PCHAN'	'PCHAN1' TO 'PCHAN29'
Tube Steel Posts	'TS'	'TS1' TO 'TS19'
Hex Couplings	'HEX'	'HEX1' TO 'HEX92'
Support Beam Webs	'WEB'	'RIGD1' to 'RIGD76' and 'RIGD186' to 'RIGD189'

Figure 6.3-1 shows a solid plot of the GTSTRUDL model is provided below. The strainer modules are represented by the stick models as shown. Figure 6.3-2 shows the model with strainer modules and the top cover plates removed so you can see the inside of the plenum.

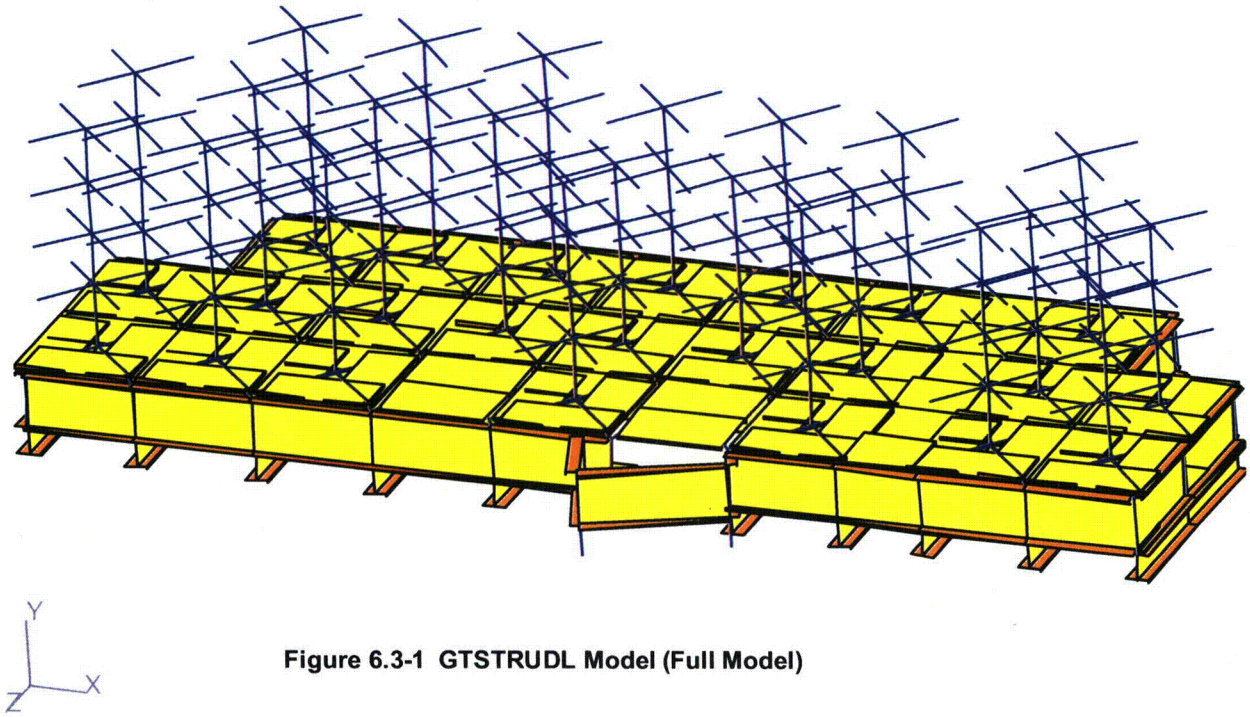

Figure 6.3-1 GTSTRUDL Model (Full Model)

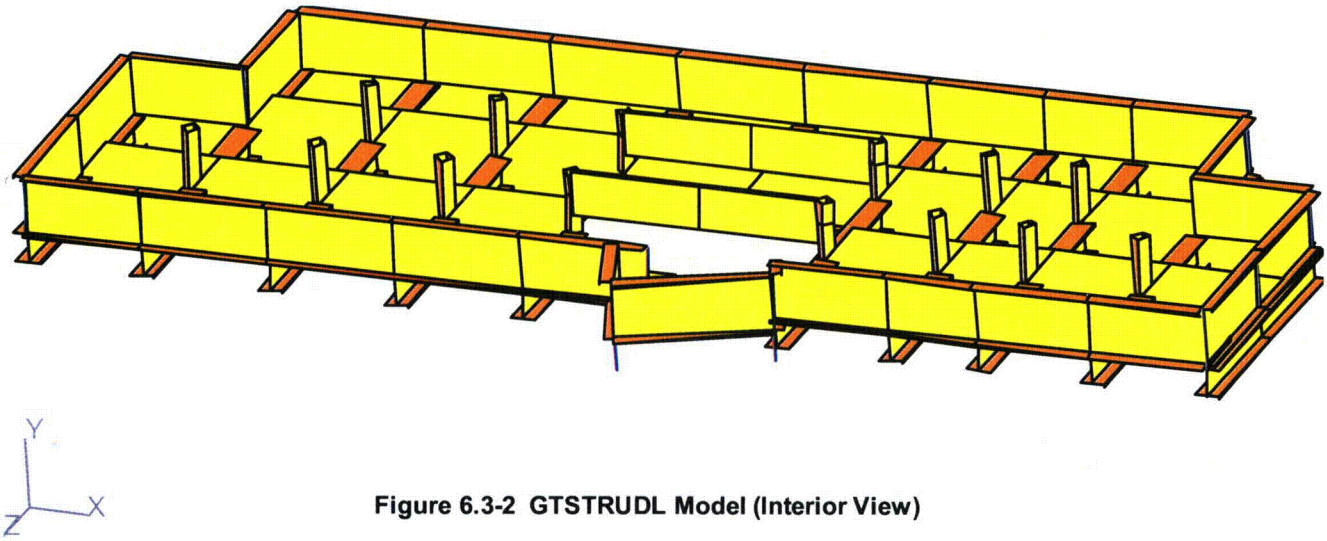

Figure 6.3-2 GTSTRUDL Model (Interior View)

Figure 6.3-3 provides a close up view of the interior of the plenum is shown in the area that spans over the sump pit. Plate beams are used in this area to span over the pit where tube steel posts can not be used.

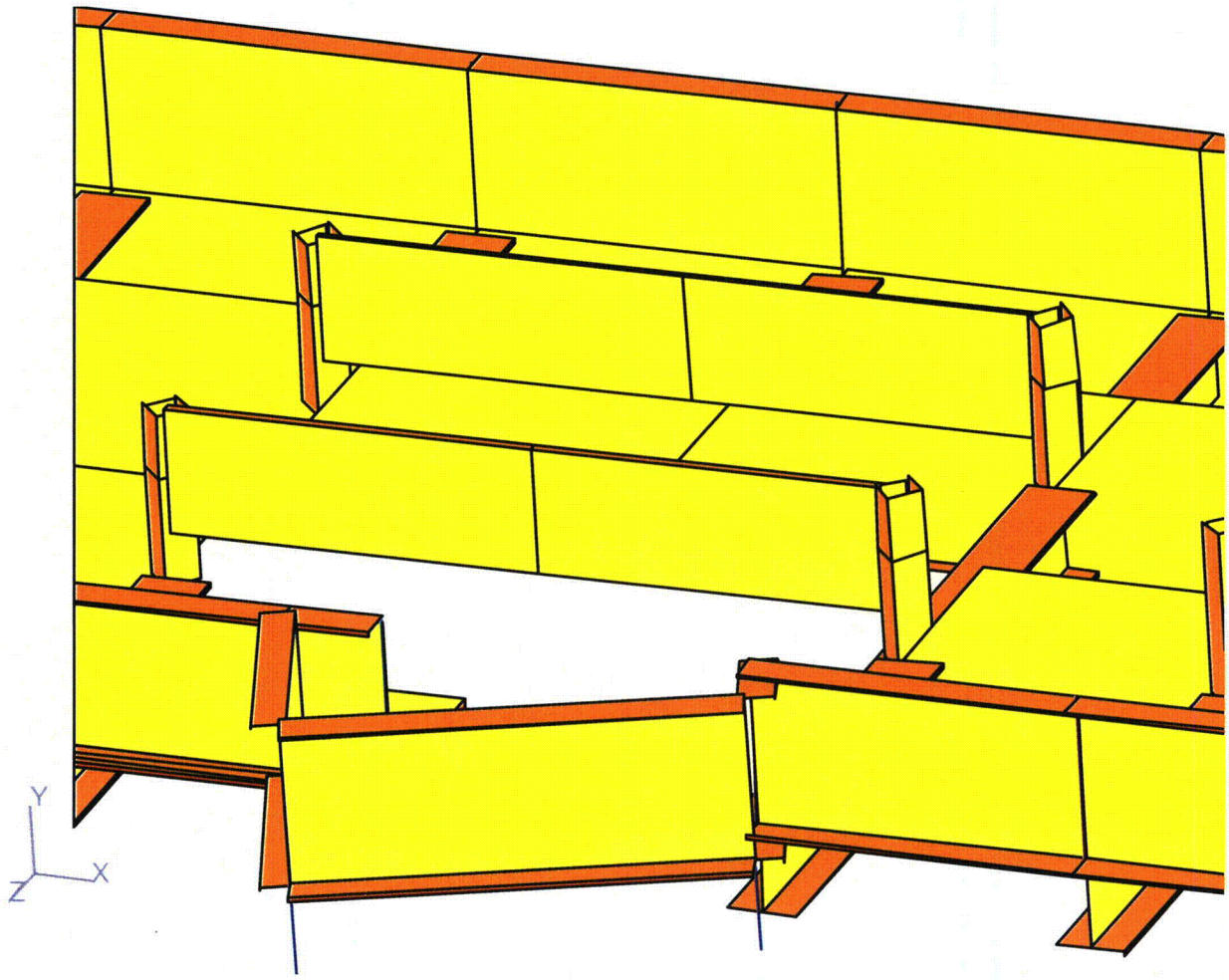

Figure 6.3-3 GTSTRUDL Model (Close up View of Interior)

6.3.2 Member Properties

Most of the member properties are defined using standard shapes available in GTSTRUDL. However, for some of the members equivalent sections are defined to account for the holes in the members or special fabricated shapes.

Group Name	Member Description	Member Property
'BEAM'	Wide Flange W6X15	GTSTRUDL Internal Table (Table 'STEEL78' 'W6X15')
'TCPLAT' 'TCPLAT1'	Top Cover Plate (1/2" Plate x 13.25" wide)	User Defined Table (Table 'RBARS' 'B1304008')
'TCPLAT2'	Top Cover Plate (w/o module) (1/2" Plate x 16" wide)	User Defined Table (Table 'RBARS' 'B1600008')
'TS'	Tube Steel Posts	GTSTRUDL Internal Table (Table 'TUBE80' 'TS3X3X5'
'PCHAN'	Plenum Box Channels (12x3x1/4)	User Defined Table (Table 'MYCHAN' 'C12X325')
'PLATE1' 'PLATE2'	Lower Deck Plates (1/2" by various widths)	User Defined Table (Table 'RBARS' 'B1600008') User Defined Table (Table 'RBARS' 'B3200008')
'PLATE3'	Plate Beams Spanning Pit (3/4" Plate x 9" wide)	GTSTRUDL Table 'RBAR' 'B0900012'
'HEX'	Hex Couplings	GTSTRUDL Pipe Section 1.15625" OD , 0.5" ID
'STNRD6F'	6 Disk Strainer Module (fixed)	Stiffness Matrix *
'STNRD7P'	7 Disk Strainer Module (pinned)	Stiffness Matrix *
'STNRD7F'	7 Disk Strainer Module (fixed)	Stiffness Matrix *
'WEB'	Support Beam Webs (vertical) (0.23" thick plates various widths)	User Defined Table (Table 'RBARS' 'B1600003') User Defined Table (Table 'RBARS' 'B3200003')
'RGS'	Rigid Links Hex to Module	Prismatic - Area = 5 in^2, Inertia = 100 in^4
'SRGD2'	Rigid Links for Cover Plates	Prismatic - Area = 6 in^2, Inertia = 1000 in^4

* See 6.4.3 for derivation of strainer module stiffness matrix

Modeling of Top Cover Plate

The top cover plate consist of a 1/2" thick plate with a 5 1/2" diameter hole in the center of each section where the flow from the core tube penetrates the plenum. This plate is modeled by splitting it into four rectangular plate members per strainer module section surrounding the hole. The plate is secured to the plenum by the same bolts/hex couplings that hold down the strainer modules using the JOINT TIES command. The plates are continuous in the short direction of the plenum (Z-direction), therefore the four plates that make up each strainer module section are connected by another plate section running in the Z-direction. Eccentricities are used to properly align the plates with the plenum. A plan view of the top plate members is shown below both in a single line and solid model view.

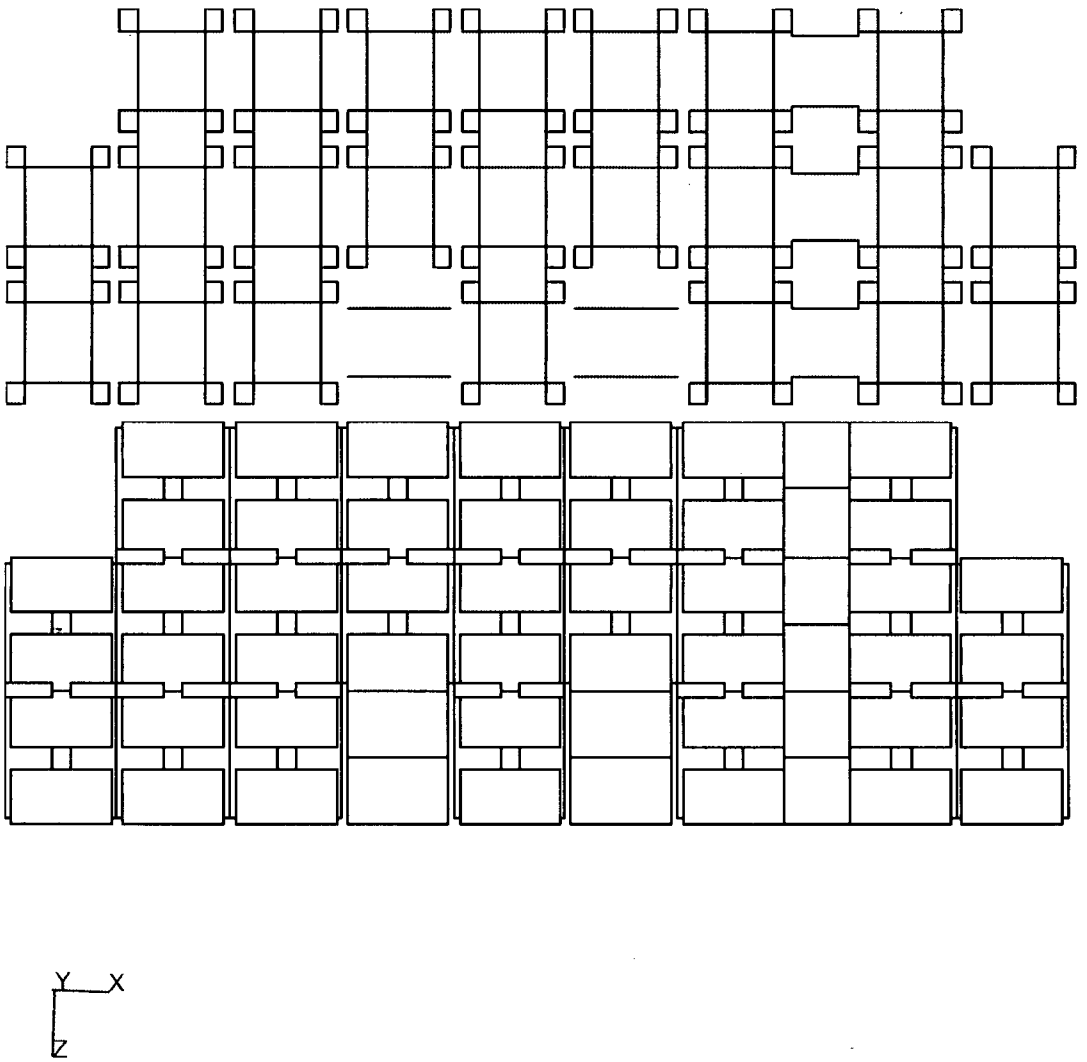

Figure 6.3-4 GTSTRUDL Model (Top Plate Modeling)

The width of each plate section is calculated below:

$$w_{tcp} := \frac{W2 - D_h}{2} \qquad w_{tcp} = 13.250\,in$$

Duplicate nodes (with identical coordinates) are used where the top plates connect to the hex couplings. One set of nodes is connected to all of the top plate members for a particular segment. The other set of nodes is connected to the hex couplings which are connected to the tube steel posts on one end, and the strainer modules on the other. The two set of nodes are restrained to move together in the global X, Y and Z directions using the JOINT TIES command, but are free to rotate relative to one another in the rotational degrees of freedom.

Since the plates are connected to the nodes having the same X-Z coordinates that are used for the hex couplings, they are modeled with an eccentricity in order to have the plates line up correctly. The magnitude of the eccentricity is:

$$e_{tcp} := \frac{w_{tcp} - w_{hex.x}}{2} \qquad e_{tcp} = 5.00\,in$$

For the two areas where there are no strainers (and thus no holes), there are just two plate sections, each 16" wide, modeled spanning across the beams in the X-direction. Rigid links are used to link plate members that bring the load to the corner hex couple bolt. The modeling approach of the top plates conservatively neglects the intermediate bolts connecting the plates to the side channels.

The plate weight and the pressure loads applied to the plate are transferred to the rest of the structure through the rigid links and joint ties with the hex couplings which are in turn connected to the tube steel posts.

Modeling of Bottom Plates (Lower Deck)

The bottom plates (or lower deck) are modeled similar to the full plates described above. They span between the support beams and are modeled as two plate sections per strainer section, each 16" wide and modeled with an eccentricity so they line up correctly. The are pinned about their local z-axis (same as global z) at the connection to the floor beam. The modeling of the bottom plates conservatively neglects the intermediate bolts to the side channels and support beams. A partial stick model view of the bottom plates is shown below:

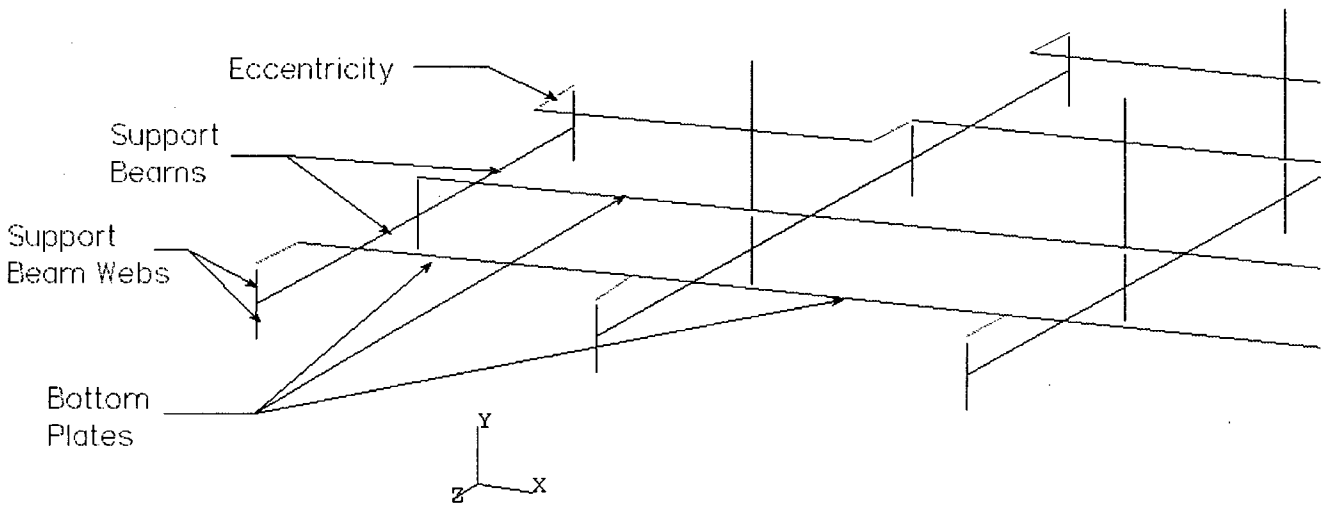

Figure 6.3-5 GTSTRUDL Model (Bottom Plate Modeling)

Modeling of Support Beams

The support beams are modeled as single line horizontal beams along their centerline. Additional members are modeled in the vertical direction to represent the beam webs. The beams are split into three sections, and web members are modeled at each beam node (four web members total). Interior web members are modeled as 32" wide sections of the web (32" wide by 0.23" thick (web thickness). Exterior web members are modeled as 16" wide sections of the web (except 'RIGD186' and 'RIGD188' which are modeled as 11" wide due to this beam being only 27" in overall length. The web members are actually specified as user defined wide flange members with flange widths equal to the web thickness, and flange thickness equal to 6". This modeling technique produces a member with overall moment of inertia and section modulus equal to that of a rectangular plate, but uses a relatively high torsional property (IX) which is what you want for these members so they will transfer moments in the global Y direction to the support beams. The modeling of the beams is depicted in the sketch below:

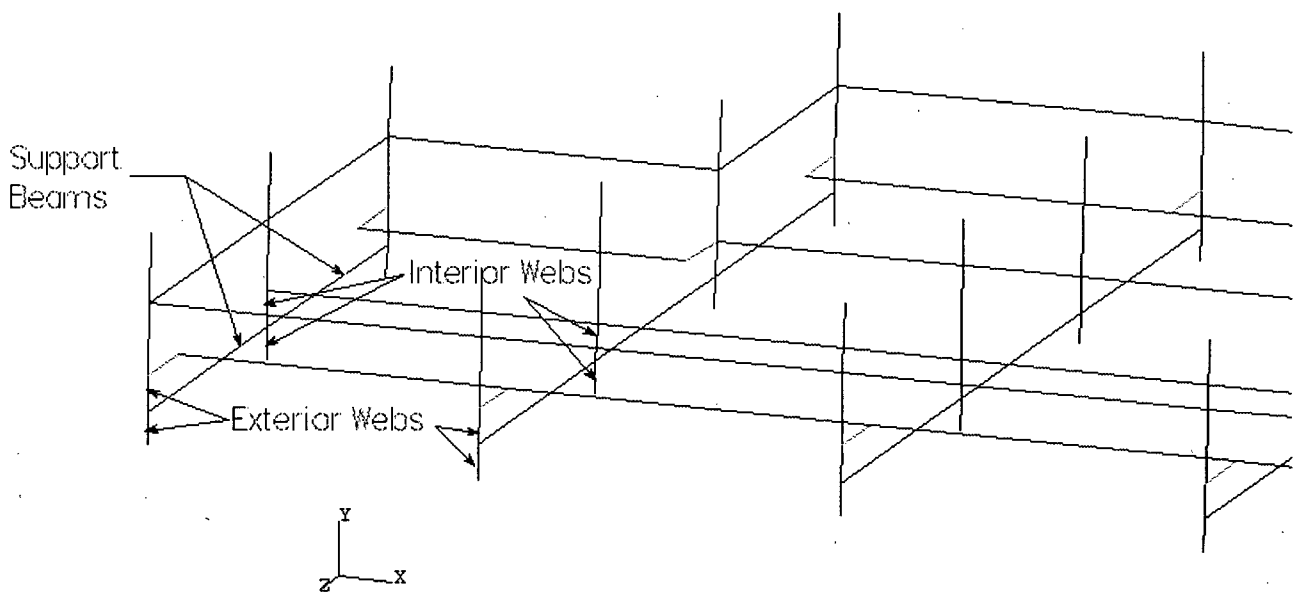

Figure 6.3-6 GTSTRUDL Model (Floor Beam Modeling)

Modeling of Plenum Box Channels

The plenum box channels (or side channels) are modeled along the perimeter of the plenum structure. They are modeled as a continuous horizontal members along each side, with moment releases at the corners and at splice locations. Rigid links are used to connect the centerline of the channels to the centerline of the support beams on the bottom, and to the strainer module and top plate connections on the top. A single line view of this connectivity is shown in the sketch below:

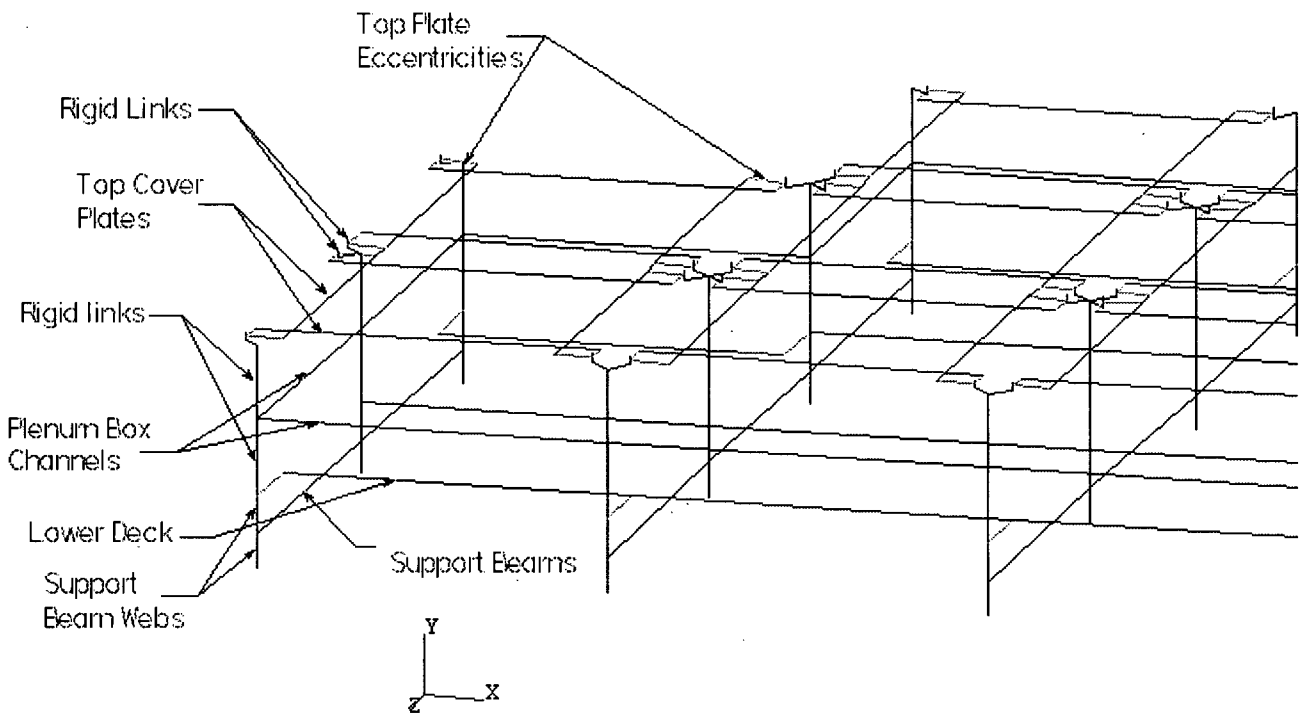

Figure 6.3-7 GTSTRUDL Model (Side Channel Modeling)

Note that the plenum box channels that follow the contour of the sump pit curb in the area of the sump pit opening are modeled with a slightly different geometry compared to that shown on the latest drawings. A last minute change resulted in rotating the entire plenum slightly with respect to the sump pit. The end result is that the angle between the sump changed from ~69.5 degrees (as modeled) to ~70.5 degrees (as-built) (see Reference [6ab]). This results in a slight change in the member lengths for Members 'PCHAN6' and 'PCHAN8'. These minor dimensional changes are considered insignificant and will have a negligible impact on the results.

6.3.3 Derivation of Strainer Module Stiffness Matrix

In order to keep the GTSTRUDL model to a reasonable number of nodes and members, the strainer modules are replaced in the overall assembly by an equivalent stick model. The stick model is intended to provide a realistic approximation of the mass and stiffness of the strainer modules using only a few simple members. The members are composed of stiffness matrix elements with masses lumped at the end joints. The stiffness matrix is determined from unit displacement load cases analyzed in the GTSTRUDL model from Reference [4]. Flexibility matrices are determined from these displacements. Stiffness matrices are then determined by inverting the flexibility matrices. The stiffness matrices are checked by running bench mark runs of the stick model and comparing the displacements and frequencies to the full detailed model to ensure the stick model is providing a reasonable representation of the mass and stiffness of the strainer modules.

Since there are two different module designs (a 6 disk, and a 7 disk), and the end conditions are different depending on whether the module is attached to the plenum (pinned for the bottom modules), or to another module (fixed for the upper modules), there are three sets of displacement cases used to determine the flexibility matrices. The three cases are as follows:

Case 1 - 7 Disk module pinned at the base (Load Cases X1, Y1, MY1, and MZ1 from Reference [4])

Case 2 - 6 Disk module fixed at the base (Load Cases X2, Y2, MY2, and MZ2 from Reference [4])

Case 3 - 7 Disk module fixed at the base (Load Cases X3, Y3, MY3, and MZ3 from Reference [4])

For the 7 disk modules, unit loads are applied at the four nodes at the center point of the hex couples at the intersection between the bottom module and the second module (Nodes 202, 203, 204, and 205). The loads are applied as follows:

X1 - Fx = 250 lbs at Nodes 202, 203, 204, and 205

Y1 - Fy = 250 lbs at Nodes 202, 203, 204, and 205

MZ1 - Fy loads which result in total Mz moment of 1000 in-lbs as follows:

$$Fy_{202.203} := \frac{1000 \cdot in \cdot lbf}{2 \cdot L2_{hex}} \qquad Fy_{202.203} = 17.4\ lbf$$

$$Fy_{204.205} := \frac{-1000 \cdot in \cdot lbf}{2 \cdot L2_{hex}} \qquad Fy_{204.205} = -17.4\ lbf$$

MY1 - Fx and Fz loads applied as shown in the figure to the Right which result in a total torsional moment of 1000 in-lbs. The load magnitude and direction are calculated on the next page.

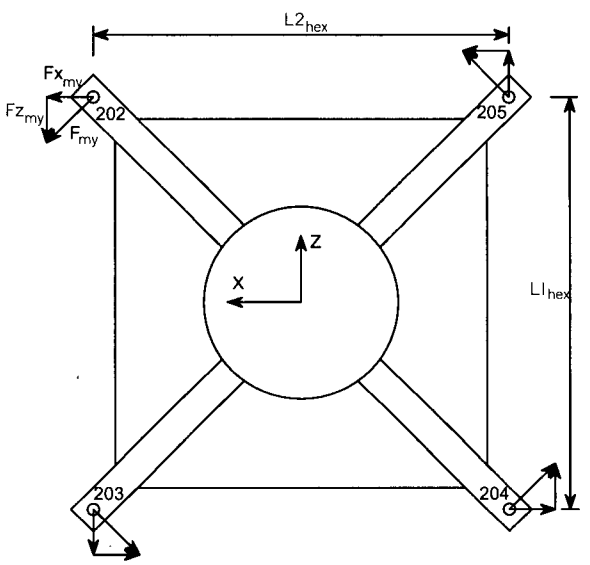

Figure 6.3-8 Load Case MY1

$$F_{my} := \frac{1000 \cdot in \cdot lbf}{2 \cdot \sqrt{L1_{hex}^2 + L2_{hex}^2}} \qquad F_{my} = 12.30\ lbf$$

The loads are applied to each node with the correct signs to result in a positive My on the strainer. The magnitude of the Fx and Fz loads are the same for each node, and are:

Node 202

$$Fx_{my} := F_{my} \cdot \frac{L1_{hex}}{\sqrt{L1_{hex}^2 + L2_{hex}^2}} \qquad Fx_{my} = 8.70\ lbf \qquad Fz_{my} := F_{my} \cdot \frac{-L2_{hex}}{\sqrt{L1_{hex}^2 + L2_{hex}^2}} \qquad Fz_{my} = -8.70\ lbf$$

Node 203

$$Fx_{my} := F_{my} \cdot \frac{-L1_{hex}}{\sqrt{L1_{hex}^2 + L2_{hex}^2}} \qquad Fx_{my} = -8.70\ lbf \qquad Fz_{my} := F_{my} \cdot \frac{-L2_{hex}}{\sqrt{L1_{hex}^2 + L2_{hex}^2}} \qquad Fz_{my} = -8.70\ lbf$$

Node 204

$$Fx_{my} := F_{my} \cdot \frac{-L1_{hex}}{\sqrt{L1_{hex}^2 + L2_{hex}^2}} \qquad Fx_{my} = -8.70\ lbf \qquad Fz_{my} := F_{my} \cdot \frac{L2_{hex}}{\sqrt{L1_{hex}^2 + L2_{hex}^2}} \qquad Fz_{my} = 8.70\ lbf$$

Node 205

$$Fx_{my} := F_{my} \cdot \frac{L1_{hex}}{\sqrt{L1_{hex}^2 + L2_{hex}^2}} \qquad Fx_{my} = 8.70\ lbf \qquad Fz_{my} := F_{my} \cdot \frac{L2_{hex}}{\sqrt{L1_{hex}^2 + L2_{hex}^2}} \qquad Fz_{my} = 8.70\ lbf$$

Displacements are taken from the center node (Node 201) which is connected to the four hex couple nodes by flexible links as described in Section 6.4.1 of Reference [4]. Small displacements are neglected as they are due to insignificant secondary effects which are not important to the overall response. This is a fictitious node which is included for convenience in obtaining overall module rotations easily.

The displacements for the six degrees of freedom for each of the four load cases are shown below. FZ1 and MX1 are based on symmetry and are taken equal to the displacements from the FX1 and MZ1 load cases.

$$\begin{array}{cccccc} X1 & Y1 & Z1 & MY1 & MZ1 & MX1 \\ D_{fx} := \begin{pmatrix} 0.113 \\ 0 \\ 0 \\ 0 \\ 0 \\ -0.00090 \end{pmatrix} & D_{fy} := \begin{pmatrix} 0 \\ .00252 \\ 0 \\ 0 \\ 0 \\ 0 \end{pmatrix} & D_{fz} := \begin{pmatrix} 0 \\ 0 \\ D_{fx_1} \\ -D_{fx_6} \\ 0 \\ 0 \end{pmatrix} & D_{my} := \begin{pmatrix} 0 \\ 0 \\ 0 \\ 0 \\ 0.000874 \\ 0 \end{pmatrix} & D_{mz} := \begin{pmatrix} -0.00090 \\ 0 \\ 0 \\ 0 \\ 0 \\ 0.000197 \end{pmatrix} & D_{mx} := \begin{pmatrix} 0 \\ 0 \\ -D_{mz_1} \\ D_{mz_6} \\ 0 \\ 0 \end{pmatrix} \end{array}$$

The flexibility matrix is determined from the displacements as follows. Note that the displacements are rotated to the local coordinate system for the stick model where X=axial (versus Y), Y=lateral (versus X), Z=global Z

$$F_{7p} := \left[\begin{pmatrix} D_{fy_2} & -D_{fx_2} & D_{fz_2} & D_{my_2} & -D_{mx_2} & D_{mz_2} \\ -D_{fy_1} & D_{fx_1} & -D_{fz_1} & -D_{my_1} & D_{mx_1} & -D_{mz_1} \\ D_{fy_3} & -D_{fx_3} & D_{fz_3} & D_{my_3} & -D_{mx_3} & D_{mz_3} \\ D_{fy_5} & -D_{fx_5} & D_{fz_5} & D_{my_5} & -D_{mx_5} & D_{mz_5} \\ -D_{fy_4} & D_{fx_4} & -D_{fz_4} & -D_{my_4} & D_{mx_4} & -D_{mz_4} \\ D_{fy_6} & -D_{fx_6} & D_{fz_6} & D_{my_6} & -D_{mx_6} & D_{mz_6} \end{pmatrix} \cdot 10^{-3} \right]$$

Global Stack Model	Local Stick Model
X	-Y
Y	X
Z	Z

$$K_{7p} := F_{7p}^{-1}$$

The stiffness matrix is determined in the units of inches, pounds, and radians by inverting the flexibility matrix

$$K_{7p} = \begin{pmatrix} 3.97 \times 10^5 & 0.00 & 0.00 & 0.00 & 0.00 & 0.00 \\ 0.00 & 9.18 \times 10^3 & 0.00 & 0.00 & 0.00 & -4.20 \times 10^4 \\ 0.00 & 0.00 & 9.18 \times 10^3 & 0.00 & 4.20 \times 10^4 & 0.00 \\ 0.00 & 0.00 & 0.00 & 1.14 \times 10^6 & 0.00 & 0.00 \\ 0.00 & 0.00 & 4.20 \times 10^4 & 0.00 & 5.27 \times 10^6 & 0.00 \\ 0.00 & -4.20 \times 10^4 & 0.00 & 0.00 & 0.00 & 5.27 \times 10^6 \end{pmatrix}$$

Case 1 Stiffness Matrix
(7 Disk - Pinned)

Note the axial term (1,1) is manually adjusted lower to introduce vertical flexibility to match the four stack model. See Section 6.3.3.1 for a more detailed discussion of this modeling technique.

The stiffness matrices for the Cases 2 and 3 are determined in a similar manner.

For Case 2 (6 disk module with fixed end conditions), the load magnitudes that are applied are the same as calculated above for Case 1, however the loads are applied at Nodes 302, 303, 304 and 305, which is at the top of the first 6 disk module. Also, Nodes 202, 203, 204, and 205 are fixed for this load case such that the resulting displacements are due to the 6 disk module only.

Case 2 - 6 disk module (fixed ends)

X2 - Fx = 250 lbs at Nodes 302, 303, 304, and 305

Y2 - Fy = 250 lbs at Nodes 302, 303, 304, and 305

MZ1 - Fy = 17.4 lbs at Nodes 302, and 303, and -17.4 lbs at Nodes 304 and 305

MY1 - Node 302 - Fx = 8.69 lbs, Fz = -8.69 lbs
Node 303 - Fx = -8.69 lbs, Fz = -8.69 lbs
Node 304 - Fx = -8.69 lbs, Fz = 8.69 lbs
Node 305 - Fx = 8.69 lbs, Fz = 8.69 lbs

For Case 3 (7 disk module with fixed end conditions), the load magnitudes that are applied are the same as calculated above for Case 1 at the same nodes (Nodes 202 - 205). However, in this case Nodes 102, 103, 104, and 105 are fixed for this load case as opposed to pinned as was used for Case 1. This stiffness matrix is used for 7 disk modules that are at the 2nd and 3rd levels of the three module stacks. The Case 1 stiffness matrix is used for the 1st level which are connected directly to the plenum and therefore are based on pinned end conditions.

Case 3 - 7 disk module (fixed ends)

X3 - Fx = 250 lbs at Nodes 202, 203, 204, and 205

Y3 - Fy = 250 lbs at Nodes 202, 203, 204, and 205

MZ3 - Fy = 17.4 lbs at Nodes 202, and 203, and -17.4 lbs at Nodes 204 and 205

MY3 - Node 202 - Fx = 8.69 lbs, Fz = -8.69 lbs
Node 203 - Fx = -8.69 lbs, Fz = -8.69 lbs
Node 204 - Fx = -8.69 lbs, Fz = 8.69 lbs
Node 205 - Fx = 8.69 lbs, Fz = 8.69 lbs

The displacements for the six degrees of freedom for each of the four load cases are shown below. Z2 and MX2 are based on symmetry and are taken equal to the displacements from the X2 and MZ2 load cases.

X2 Y2 Z2 MY2 MZ2 MX2

$$D_{fx} := \begin{pmatrix} 0.0983 \\ 0 \\ 0 \\ 0 \\ 0 \\ -0.00084 \end{pmatrix} \quad D_{fy} := \begin{pmatrix} 0 \\ .00203 \\ 0 \\ 0 \\ 0 \\ 0 \end{pmatrix} \quad D_{fz} := \begin{pmatrix} 0 \\ 0 \\ D_{fx_1} \\ -D_{fx_6} \\ 0 \\ 0 \end{pmatrix} \quad D_{my} := \begin{pmatrix} 0 \\ 0 \\ 0 \\ 0 \\ 0.000567 \\ 0 \end{pmatrix} \quad D_{mz} := \begin{pmatrix} -0.00084 \\ 0 \\ 0 \\ 0 \\ 0 \\ 0.000085 \end{pmatrix} \quad D_{mx} := \begin{pmatrix} 0 \\ 0 \\ -D_{mz_1} \\ D_{mz_6} \\ 0 \\ 0 \end{pmatrix}$$

The flexibility matrix is determined from the displacements as follows. Note that the displacements are rotated to the local coordinate system for the stick model where X=axial (versus Y), Y=lateral (versus X), Z=global Z

$$F_{6f} := \left[\begin{pmatrix} D_{fy_2} & -D_{fx_2} & D_{fz_2} & D_{my_2} & -D_{mx_2} & D_{mz_2} \\ -D_{fy_1} & D_{fx_1} & -D_{fz_1} & -D_{my_1} & D_{mx_1} & -D_{mz_1} \\ D_{fy_3} & -D_{fx_3} & D_{fz_3} & D_{my_3} & -D_{mx_3} & D_{mz_3} \\ D_{fy_5} & -D_{fx_5} & D_{fz_5} & D_{my_5} & -D_{mx_5} & D_{mz_5} \\ -D_{fy_4} & D_{fx_4} & -D_{fz_4} & -D_{my_4} & D_{mx_4} & -D_{mz_4} \\ D_{fy_6} & -D_{fx_6} & D_{fz_6} & D_{my_6} & -D_{mx_6} & D_{mz_6} \end{pmatrix} \cdot 10^{-3} \right]$$

Global Stack Model	Local Stick Model
X	-Y
Y	X
Z	Z

$$K_{6f} := F_{6f}^{-1}$$

The stiffness matrix is determined in the units of inches, pounds, and radians by inverting the flexibility matrix

$$K_{6f} = \begin{pmatrix} 4.93 \times 10^5 & 0.00 & 0.00 & 0.00 & 0.00 & 0.00 \\ 0.00 & 1.11 \times 10^4 & 0.00 & 0.00 & 0.00 & -1.10 \times 10^5 \\ 0.00 & 0.00 & 1.11 \times 10^4 & 0.00 & 1.10 \times 10^5 & 0.00 \\ 0.00 & 0.00 & 0.00 & 1.76 \times 10^6 & 0.00 & 0.00 \\ 0.00 & 0.00 & 1.10 \times 10^5 & 0.00 & 1.28 \times 10^7 & 0.00 \\ 0.00 & -1.10 \times 10^5 & 0.00 & 0.00 & 0.00 & 1.28 \times 10^7 \end{pmatrix}$$

Case 2 Stiffness Matrix (6 Disk - Fixed)

Note the axial term (1,1) is manually adjusted lower to introduce vertical flexibility to match the four stack model. See Section 6.3.3.1 for a more detailed discussion of this modeling technique.

The displacements for the six degrees of freedom for each of the four load cases are shown below. Z3 and MX3 are based on symmetry and are taken equal to the displacements from the X3 and MZ3 load cases.

X3 Y3 Z3 MY3 MZ3 MX3

$$D_{fx} := \begin{pmatrix} 0.112 \\ 0 \\ 0 \\ 0 \\ 0 \\ -0.00085 \end{pmatrix} \quad D_{fy} := \begin{pmatrix} 0 \\ 0.00208 \\ 0 \\ 0 \\ 0 \\ 0 \end{pmatrix} \quad D_{fz} := \begin{pmatrix} 0 \\ 0 \\ D_{fx_1} \\ -D_{fx_6} \\ 0 \\ 0 \end{pmatrix} \quad D_{my} := \begin{pmatrix} 0 \\ 0 \\ 0 \\ 0 \\ 0.000572 \\ 0 \end{pmatrix} \quad D_{mz} := \begin{pmatrix} -0.00085 \\ 0 \\ 0 \\ 0 \\ 0 \\ 0.000077 \end{pmatrix} \quad D_{mx} := \begin{pmatrix} 0 \\ 0 \\ -D_{mz_1} \\ D_{mz_6} \\ 0 \\ 0 \end{pmatrix}$$

The flexibility matrix is determined from the displacements as follows. Note that the displacements are rotated to the local coordinate system for the stick model where X=axial (versus Y), Y=lateral (versus X), Z=global Z

$$F_{7f} := \left[\begin{pmatrix} D_{fy_2} & -D_{fx_2} & D_{fz_2} & D_{my_2} & -D_{mx_2} & D_{mz_2} \\ -D_{fy_1} & D_{fx_1} & -D_{fz_1} & -D_{my_1} & D_{mx_1} & -D_{mz_1} \\ D_{fy_3} & -D_{fx_3} & D_{fz_3} & D_{my_3} & -D_{mx_3} & D_{mz_3} \\ D_{fy_5} & -D_{fx_5} & D_{fz_5} & D_{my_5} & -D_{mx_5} & D_{mz_5} \\ -D_{fy_4} & D_{fx_4} & -D_{fz_4} & -D_{my_4} & D_{mx_4} & -D_{mz_4} \\ D_{fy_6} & -D_{fx_6} & D_{fz_6} & D_{my_6} & -D_{mx_6} & D_{mz_6} \end{pmatrix} \cdot 10^{-3} \right]$$

Global Stack Model	Local Stick Model
X	-Y
Y	X
Z	Z

$$K_{7f} := F_{7f}^{-1}$$

The stiffness matrix is determined in the units of inches, pounds, and radians by inverting the flexibility matrix

$$K_{7f} = \begin{pmatrix} 4.81 \times 10^5 & 0.00 & 0.00 & 0.00 & 0.00 & 0.00 \\ 0.00 & 9.74 \times 10^3 & 0.00 & 0.00 & 0.00 & -1.08 \times 10^5 \\ 0.00 & 0.00 & 9.74 \times 10^3 & 0.00 & 1.08 \times 10^5 & 0.00 \\ 0.00 & 0.00 & 0.00 & 1.75 \times 10^6 & 0.00 & 0.00 \\ 0.00 & 0.00 & 1.08 \times 10^5 & 0.00 & 1.42 \times 10^7 & 0.00 \\ 0.00 & -1.08 \times 10^5 & 0.00 & 0.00 & 0.00 & 1.42 \times 10^7 \end{pmatrix}$$

Case 3 Stiffness Matrix (7 Disk - Fixed)

Note the axial term (1,1) is manually adjusted lower to introduce vertical flexibility to match the four stack model. See Section 6.3.3.1 for a more detailed discussion of this modeling technique.

Once the stiffness matrices are determined, stick models representing the 4 stack and 3 stack configurations are determined by stringing 3 or 4 stiffness matrix members together. These stiffness matrices account for the stiffness of the strainer modules. To account for the mass, masses are lumped at the joints of the stick model. 50% of the mass for each strainer module is lumped at either end of the member. Since these masses also have an offset from the centerline of the strainer modules, rigid links are used at each joint of the stick model in a cross pattern. The strainer module masses are then lumped at these end nodes to give the mass an eccentricity off the centerline. The length of these members is chosen by trial and error by comparing the frequencies and mode shapes of the stick models to that of the stack models. The first mode for the stack model is a twisting mode. By trial and error, the appropriate length of these rigid links is determined to be 15.25" such that the stick model shows a similar mode at a similar frequency. The 4 stick model is shown below. This model is comprised of a 7 disk module on the bottom, with three 6 disk modules stacked on top.

The weights (masses) at each joint between modules are determined by taking 50% of the module weight at each end. Based on this approach, the masses for the four nodes at each level are determined below:

$$W_{100} := \frac{0.5 \cdot Wt_2}{4} \qquad W_{100} = 28.125 \text{ lbf}$$

$$W_{101} := \frac{0.5 \cdot (Wt_1 + Wt_2)}{4} \qquad W_{101} = 52.750 \text{ lbf}$$

$$W_{102} := \frac{Wt_1}{4} \qquad W_{102} = 49.250 \text{ lbf}$$

$$W_{103} := \frac{Wt_1}{4} \qquad W_{103} = 49.250 \text{ lbf}$$

$$W_{104} := \frac{0.5 \cdot Wt_1 + Wt_{ec}}{4} \qquad W_{104} = 27.125 \text{ lbf}$$

$$W_{total4} := 4 \cdot (W_{100} + W_{101} + W_{102} + W_{103} + W_{104})$$

$$W_{total4} = 826.0 \text{ lbf}$$

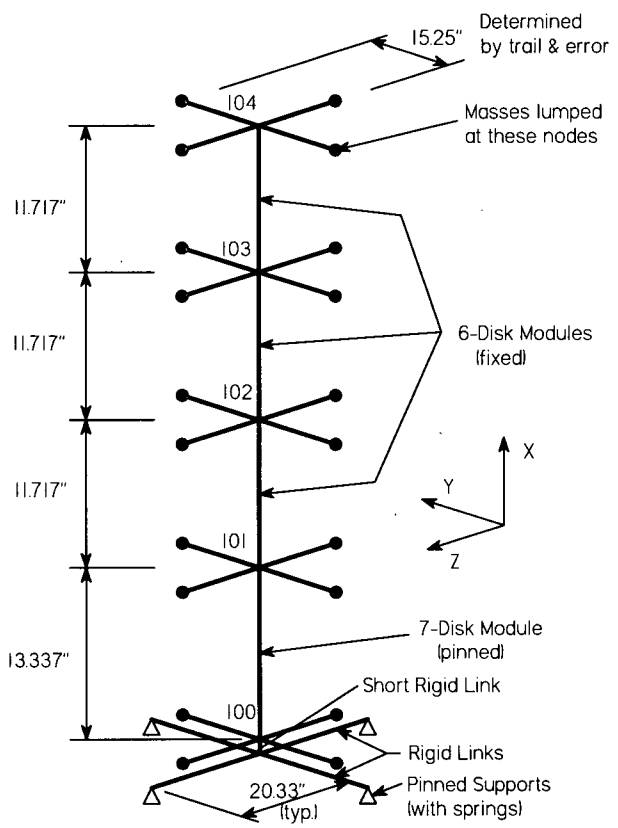

Figure 6.3-9 Four Stick Model

A similar approach is used for the three stacks of 7 disk modules. The masses for this stick model is:

$W_{bot} := \frac{0.5 \cdot Wt_2}{4}$ $\quad W_{bot} = 28.1$ lbf (at bottom joint)

$W_{top} := \frac{0.5 \cdot Wt_2 + Wt_{ec}}{4}$ $\quad W_{top} = 30.6$ lbf (at top joint)

$W_{middle} := \frac{Wt_2}{4}$ $\quad W_{middle} = 56.3$ lbf (at mid-level joints)

$W_{total3} := 4 \cdot (W_{bot} + W_{top} + 2 \cdot W_{middle})$ $\quad W_{total3} = 685.0$ lbf

6.3.3.1 Benchmarking

The 4 stick model is benchmarked against the 4 stack model to ensure the stick model provides a good representation of the full model. Both the four stick model and the four stack model are modeled with translational springs at the four support points to represent the stiffness of the plenum. Masses are also modeled on the four rigid links at the bottom to represent the mass of the plenum which also acts on the springs. The magnitude of the mass is adjusted by trail and error to match the frequency from the full model. This particularly comes into play for critical Mode 4. The four stack model is analyzed in Reference [4]. From that calculation the frequencies, mode shapes, and displacements under unit loads (1000 lbf) was determined. These values are shown below:

Results comparison between four stack, four stick, and full model)

Parameter	Description	4 Stack Model*	4 Stick Model*	Full Model*
Critical Mode 1	Bending Mode	6.3 Hz (Mode 2X)	5.8 Hz (Mode 1)	6.0 Hz (Mode 1)
Critical Mode 2	Twisting Mode	6.5 Hz (Mode 3X)	6.5 Hz (Mode 3)	6.2 Hz (Mode 2)
Critical Mode 3	Vertical Mode	11.7 Hz (Mode 6Y)	11.8 Hz (Mode 5)	11.8 Hz (M. 71)
Critical Mode 4	Bending Mode (2nd)	14.2 Hz (Mode 5X)	14.0 Hz (Mode 5)	14.2 Hz (Mode 84)
X-Displacement	X-Displacement	0.72" (Load BENCHX)	0.91" (Load X1)	

* Four stack model results are from Reference [4], four stick model results are from Attachment A, and full model results are from Attachment B.

Based on a comparison of the results, it is confirmed that the stick model provides a reasonable representation of the full strainer module and that this method of modeling will produce reasonable results. The stick model is showing up a little more flexible than the full model which is conservative for the plenum analysis.

6.3.4 Member Releases

The actual configuration of the connections is modeled by adding member releases to the model. The following releases are used in the model:

The strainers stick models are connected to rigid links which span out to the hex couplings at the four corners. All three moments are released at the top of the hex coupling where they connect to the rigid links as shown in the figure to the Right.

In addition, the plenum box channels are released for all three moments at the corners of the plenum (each place the plenum box channel makes a corner)

The plenum box channels are also released about their local X-axis where they attach to the support beams on the bottom flange, and where they attach to the top cover plates on the top flange. The channels are connected to these members using rigid links from the centerline of the channels to these connection points. Moment releases are also used between channel sections where there is a field splice connection.

The lower deck plates and the full cover plates on top (where there are no modules) are conservatively released for local My at both ends for all plate members. This will result in the plates carrying the pressure loads as pinned-pinned beams across the span between support beams.

The floor beam web members are modeled with rotational springs at each end to account for the local flexibility of the beam flanges. The magnitude of the spring stiffness is calculated on the next page.

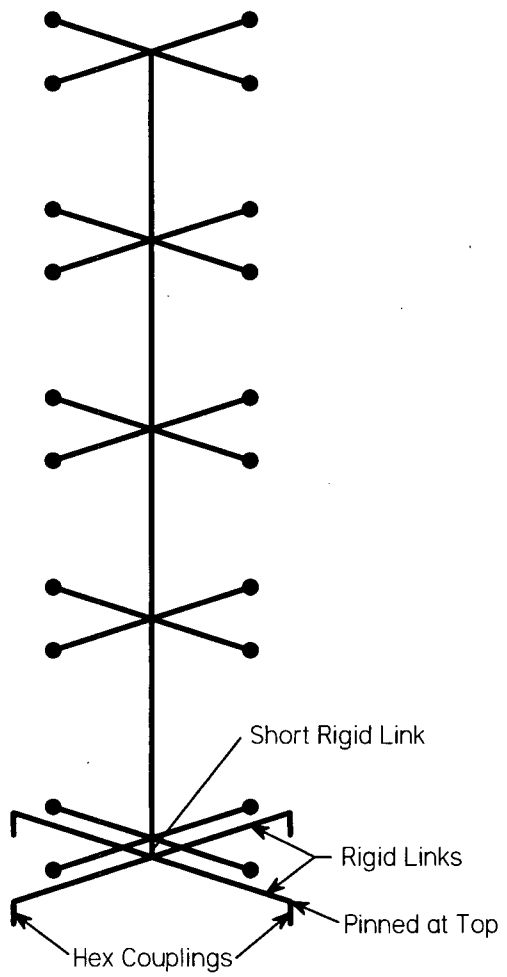

Figure 6.3-10 Strainer Module Modeling

To account for the flexibility of the floor beam flanges, rotational springs are used at each end of the members representing the floor beam webs. This flexibility is important for the thermal analysis of the plenum. The flange stiffness is approximated by considering the flange as a fixed-pinned beam. A fixed boundary condition is used on one side to represent the stiffness of the concrete for the bottom flange, or the connecting members for the top flange. A four inch span is considered which is the spacing of the expansion anchors.

To determine the stiffness of the rotational spring which represents the flange flexibility, the rotation at the center of a fixed-pinned beam subjected to a concentrated moment must be calculated. The rotation can be determined by summing the area under the curvature diagram. The curvature diagram is simply the moment diagram divided by EI. Per Roark and Young (Reference [7], the reactions at Points A and C can be determined from Case 3c of Table 3.

$L_f := 4 \cdot in$ $\quad a_f := 2 \cdot in$ $\quad M_o := 1000 \cdot in \cdot lbf$

$$R_A := \frac{-3 \cdot M_o}{2 \cdot L_f^3} \cdot \left(L_f^2 - a_f^2\right) \qquad R_A = -281.25\ lbf$$

$$R_B := \frac{3 \cdot M_o}{2 \cdot L_f^3} \cdot \left(L_f^2 - a_f^2\right) \qquad R_B = 281.25\ lbf$$

$$M_B := \frac{M_o}{2 \cdot L_f^2} \cdot \left(3 \cdot a_f^2 - L_f^2\right) \qquad M_B = -125.00\ in \cdot lbf$$

$$M_C := M_B + R_B \cdot a_f \qquad M_C = 437.50\ in \cdot lbf$$

The effective width of the flange is taken as extending out 6" either side of the bolts. Three cases are considered, an exterior connection (where only 3" is available on one side), an interior connection with a two bolt connection, and an exterior connection with a four bolt connection (in this case the spacing between bolt pairs in included).

$$b_f := \begin{pmatrix} 3+6 \\ 3+6+6 \\ 6+6 \\ 6+6+6 \end{pmatrix} \cdot in$$

Exterior Section (two bolt)
Exterior Section (four bolt)
Interior Section (two bolt)
Interior Section (four bolt)

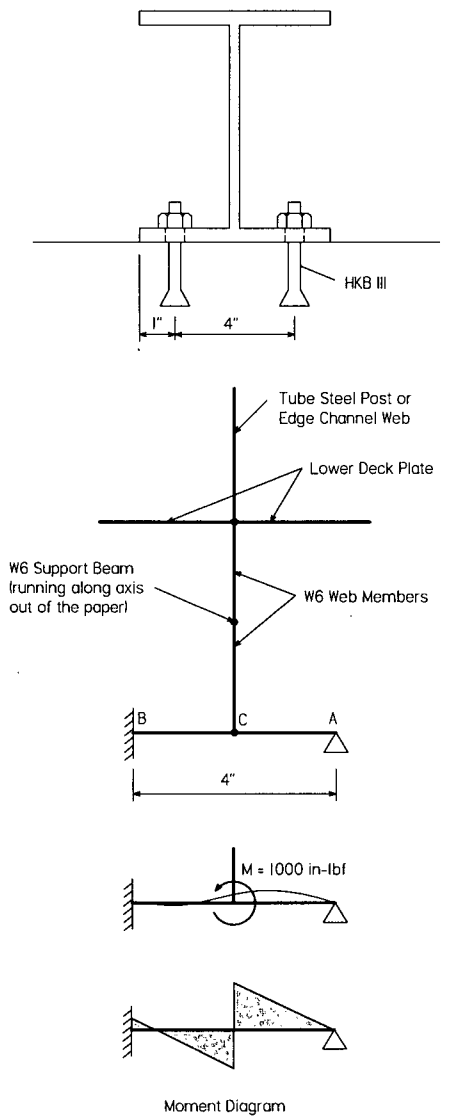

Figure 6.3-11 Flange Stiffness

The moment of inertia is then,

$t_{fb} = 0.26\,in$

$$I_f := \frac{1}{12} \cdot b_f \cdot t_{fb}^3 \qquad I_f = \begin{pmatrix} 0.0132 \\ 0.0220 \\ 0.0176 \\ 0.0264 \end{pmatrix} in^4$$

The change in slope is equal to the area under the curvature diagram. Since the slope at Point B is zero, the slope at Point C, or the rotation at Point C, is simply the are under the curvature diagram between Points B and C

The location of zero moment can be determined by similar triangles to be

$$\frac{x_o}{-M_B} = \frac{a_f - x_o}{M_C}$$

$$x_o := \frac{-M_B \cdot a_f}{M_C - M_B} \qquad x_o = 0.44\,in$$

$$\theta_f := \frac{M_B \cdot x_o}{2 \cdot E_{sa} \cdot I_f} + \frac{M_C \cdot (a_f - x_o)}{2 \cdot E_{sa} \cdot I_f} \qquad \theta_f = \begin{pmatrix} 0.049 \\ 0.029 \\ 0.037 \\ 0.025 \end{pmatrix} deg$$

$$K_f := \frac{M_o}{\theta_f} \qquad K_f = \begin{pmatrix} 1.2 \times 10^6 \\ 1.9 \times 10^6 \\ 1.6 \times 10^6 \\ 2.3 \times 10^6 \end{pmatrix} \frac{in \cdot lbf}{rad}$$

Exterior Section (two bolt)	(Group 'RIGWE2')
Exterior Section (four bolt)	(Group 'RIGWE4')
Interior Section (two bolt)	(Group 'RIGWI2')
Interior Section (four bolt)	(Group 'RIGWI4')

These values are used in the GTSTRUDL analysis at both the top and bottom of the web members to account for the flexibility of the floor beam flanges.

6.3.5 Support Joints and Joint Releases

The plenum is anchored to the floor using expansion anchors through the flanges of the support beam and/or clips welded to the embedded channel along the sump curb. The beams are anchored at 32 inch intervals (at the tube steel post locations and at the end of each floor beam), using a variety of connection designs depending on the location. At some locations 4 expansion anchors are used for additional capacity.

Slotted and/or oversized holes are used in certain locations to allow for thermal expansion. The support beams are secured along the third row of support joints from the East side of the sump (see sketch below) in all three directions. All other rows in the X-direction are slotted in the Z-direction (along the axis of the beam) to allow thermal growth from this fixed row. A detailed anchoring plan is shown in Figure 6.3-13.

The channel that borders the outline of the sump is supported at the three corner locations using rigid links. The channels are anchored to the embedded channel in the sump curb at these locations using welded clips. These clips provide for vertical restraint only and allow lateral sliding for thermal expansion. These joints are therefore released for all degrees of freedom except for vertical.

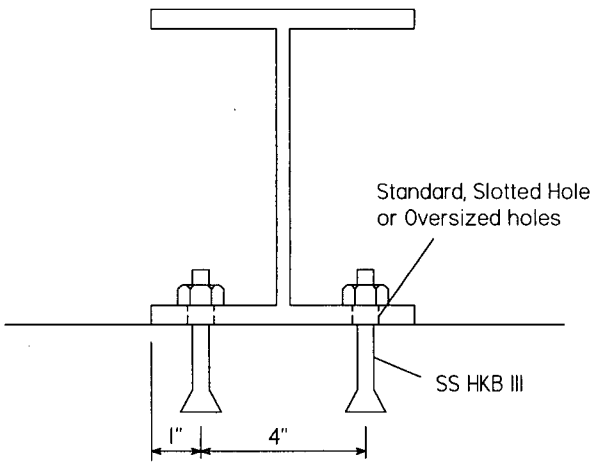

Figure 6.3-12 Anchoring Detail

In addition to these support points, the triangular lower deck plate sections that surround the sump pit opening rest on the curb around the border of the sump. These lower deck plates are not included in the GTSTRUDL model. These plates are held down by welded clips, similar to the bordering channel, therefore they only provide vertical restraint and allow sliding in the lateral direction. For this reason, they are not required to be included in the model.

Based on the discussion on the previous page, the Joint Supports for each location are shown on the sketch below.

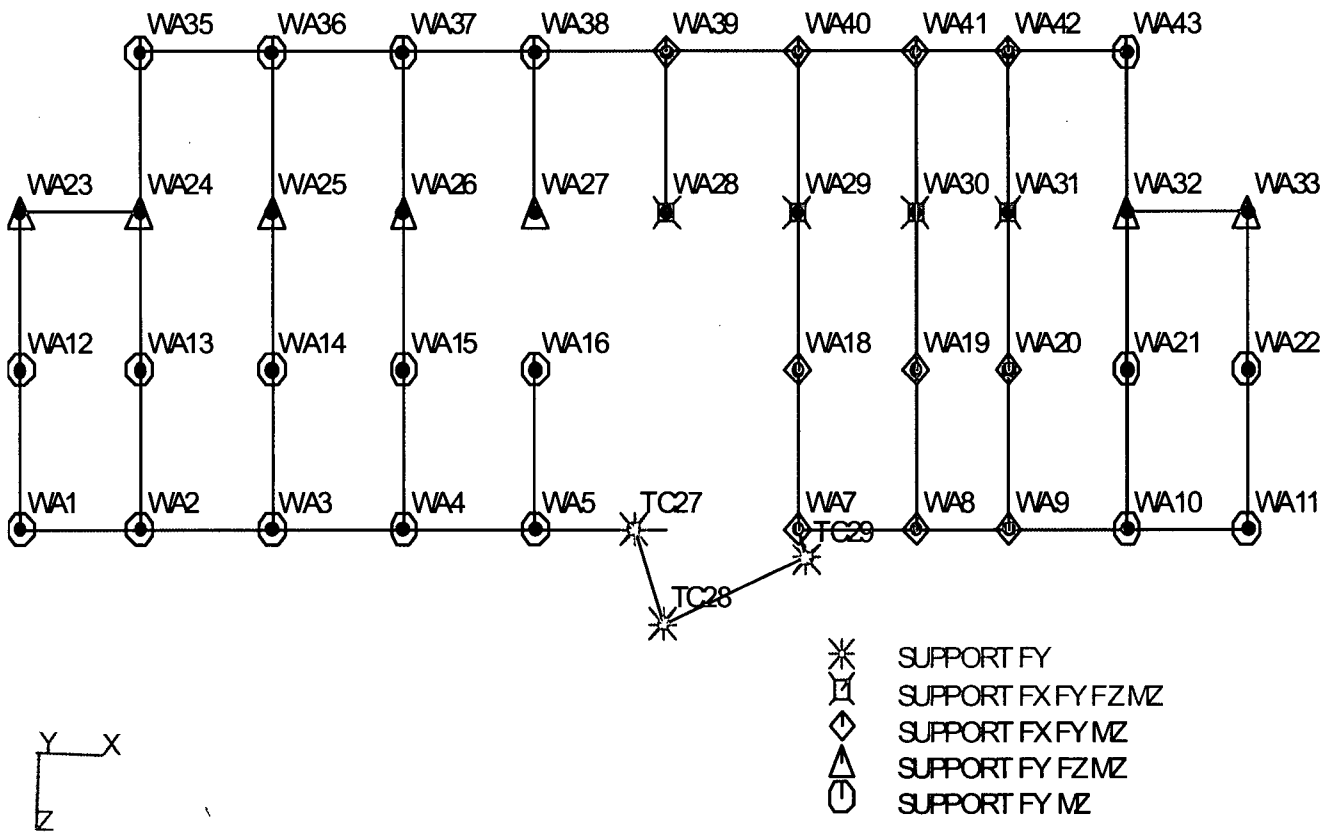

Figure 6.3-13 Anchoring Plan

6.3.6 Effective Length Coefficients

The effective length is automatically calculated by GTSTRUDL as the node to node length for each member. In special circumstances where intermediate nodes have been used for a collective member, effective lengths were manually inputted. This is required only for the support beams. Note these same lengths are used for both LY and LZ, as well as the unbraced length of the compression flange.

Support Beam Length	$L_{supt} := W2 \cdot N_z$	$L_{supt} = 96.00\ in$
Post Length	$L_{post} := 11.25 \cdot in$	$L_{post} = 11.25\ in$
Sump Pit Spanning Beam	$L_{beam} := W2$	$L_{beam} = 32.00\ in$
Top Plate / Lower Deck Plates	$L_{plate} := \max(L1_{hex}, L2_{hex})$	$L_{plate} = 28.75\ in$
Web Plates	$L_{web} := 6in - 2 \cdot t_{fb}$	$L_{web} = 5.48\ in$

In addition to the effective length adjustments described above, the effective length factors in GTSTRUDL are used to account for stainless steel in place of standard carbon steel. An equivalent K-value must be computed to adjust the GTSTRUDL code check equations for the edge channels and the external radial stiffeners. The ANSI/AISC N690 code (Ref. [21]) provides equations for stainless steels and carbon steels (the latter being employed by GTSTRUDL). Upon further examination, only the compression equations are of interest. In order to force the GTSTRUDL allowables for carbon steel to reflect the allowables for stainless steel, a effective K-value is computed and inputted into GTSTRUDL.

$i := 1 .. 5$

$S_{y.a} := \frac{S_{ya}}{ksi}$ $\qquad S_{y.a} = 25.50$

$K_{eq} := 1$

$L_{klr} := \begin{pmatrix} L_{supt} \\ L_{post} \\ L_{beam} \\ L_{plate} \\ L_{web} \end{pmatrix}$ (Note these unbraced length are also inputted into GTSTRUDL)

$L_{klr} = \begin{pmatrix} 96.00 \\ 11.25 \\ 32.00 \\ 28.75 \\ 5.48 \end{pmatrix} in$

Support Beams
Tube Steel Posts
Pit Spanning Plate Beams
Top Cover / Lower Deck Plates
Web Plates

$$r_{klr} := \begin{pmatrix} 1.46 \cdot in \\ 1.07 \cdot in \\ \frac{0.75 \cdot in}{\sqrt{12}} \\ \frac{t_{tcp}}{\sqrt{12}} \\ \frac{0.23 \cdot in}{\sqrt{12}} \end{pmatrix} \qquad r_{klr} = \begin{pmatrix} 1.46 \\ 1.07 \\ 0.22 \\ 0.14 \\ 0.07 \end{pmatrix} in$$

Support Beams
Tube Steel Posts
Pit Spanning Plate Beams
Top Cover / Lower Deck Plates
Web Plates

$$KLR := \frac{\overrightarrow{K_{eq} \cdot L_{klr}}}{r_{klr}} \qquad KLR = \begin{pmatrix} 65.8 \\ 10.5 \\ 147.8 \\ 199.2 \\ 82.5 \end{pmatrix}$$

The allowable compression stress in accordance with N690 (Reference [21]) for each of these members is:

$$F_{a.ss1_i} := \frac{S_{y.a}}{2.15} - \left(\frac{\frac{S_{y.a}}{2.15} - 6}{120} \right) \cdot \frac{\overrightarrow{K_{eq} \cdot L_{klr_i}}}{r_{klr_i}} \qquad F_{a.ss1} = \begin{pmatrix} 8.649 \\ 11.347 \\ 4.642 \\ 2.133 \\ 7.830 \end{pmatrix} \quad \text{(Q1.5-11)}$$

$$F_{a.ss2_i} := S_{y.a} \cdot \left[0.40 - \frac{1}{600} \cdot \left(\frac{K_{eq} \cdot L_{klr_i}}{r_{klr_i}} \right) \right] \qquad F_{a.ss2} = \begin{pmatrix} 7.41 \\ 9.75 \\ 3.92 \\ 1.73 \\ 6.69 \end{pmatrix} \quad \text{(Q1.5-12 from Supplement 1)}$$

$$F_{a.ss_i} := \text{if}\left(KLR_i \le 120, F_{a.ss1_i}, F_{a.ss2_i}\right) \qquad F_{a.ss} = \begin{pmatrix} 8.65 \\ 11.35 \\ 3.92 \\ 1.73 \\ 7.83 \end{pmatrix}$$

GTSTRUDL calculates the compression allowable dependent on the value of Cc. If you consider that KL/R exactly equals Cc, the GTSTRUDL would calculate the compression allowable as:

$$F_{a.cc} := \frac{\left(1 - \frac{1}{2}\right)\cdot S_{y.a}}{\frac{5}{3} + \frac{3}{8} - \frac{1}{8}} \qquad F_{a.cc} = 6.652 \qquad \text{(For KL/R = Cc)}$$

The Cc and the L/R ratio for the affected members are:

$$C_c := \sqrt{\frac{2\cdot\pi^2\cdot E_{sa}}{S_{ya}}} \qquad C_c = 146.30 \qquad \text{(Reference [21])}$$

$$LR_{klr} := \frac{L_{klr}}{r_{klr}} \qquad LR_{klr} = \begin{pmatrix} 65.8 \\ 10.5 \\ 147.8 \\ 199.2 \\ 82.5 \end{pmatrix}$$

If you consider that the effective KL/r in GTSTRUDL ends up being less than Cc, then the effective K value can be solved for by setting the GTSTRUDL equation equal to the actual compression allowable per N-690.

$K_{aCS1} := 1$ (Initial Guess)

$$K_{aCS1_i} := \text{root}\left[\frac{\left[1 - \frac{\left(\overrightarrow{\left(K_{aCS1}\cdot LR_{klr_i}\right)}\right)^2}{2\cdot C_c^2}\right]\cdot S_{y.a}}{\frac{5}{3} + \frac{3\cdot\left(\overrightarrow{\left(K_{aCS1}\cdot LR_{klr_i}\right)}\right)}{8\cdot C_c} - \frac{\left(\overrightarrow{\left(K_{aCS1}\cdot LR_{klr_i}\right)}\right)^3}{8\cdot C_c^3}} - F_{a.ss_i}, K_{aCS1}\right] \qquad K_{aCS1} = \begin{pmatrix} 1.869 \\ 8.156 \\ 1.178 \\ 0.970 \\ 1.610 \end{pmatrix}$$

If you consider that the effective KL/r in GTSTRUDL ends up being greater than Cc, then the effective K value can be solved for by setting the GTSTRUDL equation equal to the actual compression allowable per N-690.

$$K_{aCS2} := \overrightarrow{\sqrt{\frac{1}{F_{a.ss}}\cdot\left(\frac{12\cdot\pi^2\cdot\frac{E_{sa}}{ksi}}{23\cdot LR_{klr}^2}\right)}} \qquad K_{aCS2} = \begin{pmatrix} 1.951 \\ 10.654 \\ 1.290 \\ 1.438 \\ 1.634 \end{pmatrix}$$

The applicable equation can be determined by comparing the N690 allowable to the GTSTRUDL allowable based on KL/R equal to Cc. Therefore, the effective length factor to use in GTSTRUDL is:

$$K_{aCS_i} := \text{if}\left(F_{a.ss_i} \le F_{a.cc}, K_{aCS2_i}, K_{aCS1_i}\right) \qquad K_{aCS} = \begin{pmatrix} 1.869 \\ 8.156 \\ 1.290 \\ 1.438 \\ 1.610 \end{pmatrix}$$

In addition to the equations for the allowable compression stress, N-690 also provides a lower allowable for F_e'. Equating the equation for F_e' of carbon steel to austenitic stainless steel and solving for the K-value of carbon steel,

$$K_{eCS} := \sqrt{\frac{12 \cdot (2.15) \cdot K_{eq}^2}{23}} \qquad K_{eCS} = 1.06$$

The effective K value to be used in GTSTRUDL is the maximum between these two values. Using the maximum between the two will provide a conservative result. These are the values input into GTSTRUDL. If the members fail the GTSTRUDL code check a detailed calculation can be performed.

$$K_{eff_i} := \max\left(K_{aCS_i}, K_{eCS}\right) \qquad K_{eff} = \begin{pmatrix} 1.87 \\ 8.16 \\ 1.29 \\ 1.44 \\ 1.61 \end{pmatrix}$$

Support Beams
Tube Steel Posts
Pit Spanning Plate Beams
Top Cover / Lower Deck Plates
Web Plates

For the Top Cover Plates, since using this artificially inflated KL/R factor would result in a KL/R greater than 200 and would fail the GTSTRUDL code check, use a reduced E value instead ('REDE' in GTSTRUDL). Since this is a relatively slender member with a KL/R greater than Cc, the REDE parameter can be calculated as follows:

$$REDE_{tcp} := \frac{F_{a.ss2_4} \cdot ksi \cdot \frac{\left(LR_{klr_4}\right)^2}{\pi^2} \cdot \frac{23}{12}}{E_{sc}} \qquad REDE_{tcp} = 0.47$$

Top Cover / Lower Deck Plates

6.3.7 Load Application

The model is analyzed for three load combinations as described in Section 3.0. The method of how these loads are applied to the model is described below:

Operating Loads

Operating loads include Dead Weight, Debris Weight, and Differential Pressure

Dead weight loads are applied to the model in two ways. For most members, GTSTRUDL calculated the dead weight based on the material cross section and the density of stainless steel. For the strainer modules, a Joint Load is applied to each strainer stack in the vertical downward direction equal to the combined weight of the stack of modules. The are two stack configurations. The four stack configuration includes one 7 disk module, with three 6 disk modules. The three stack configuration is three 7 disk modules. Therefore the weight per stack is:

$$Wt_{stack} := \begin{pmatrix} Wt_2 + 3 \cdot Wt_1 + Wt_{ec} \\ 3 \cdot Wt_2 + Wt_{ec} \end{pmatrix} \qquad Wt_{stack} = \begin{pmatrix} 826.0 \\ 685.0 \end{pmatrix} lbf$$

The weight of the debris is applied in a similar fashion. The weight of the debris per stack is:

$$DEB := \begin{pmatrix} WD_2 + 3 \cdot WD_1 \\ 3 \cdot WD_2 \end{pmatrix} \qquad DEB = \begin{pmatrix} 1077.0 \\ 909.0 \end{pmatrix} lbf$$

The pressure is applied to the model based on the width of the affected members and applied as uniform distributed loads along the length of the member. The loads are applied inward on all surfaces. The affected members are:

$$P := DP \cdot \begin{pmatrix} w_{tcp} \\ 12 \cdot in \\ 16 \cdot in \\ 32 \cdot in \end{pmatrix} \qquad \begin{matrix} \text{Top cover plates} \\ \text{Plenum channels} \\ \text{Lower deck plates (end)*} \\ \text{Lower deck plates (middle)} \end{matrix} \qquad P = \begin{pmatrix} 20.1 \\ 18.2 \\ 24.3 \\ 48.6 \end{pmatrix} \frac{lbf}{in}$$

*Note:also applied vertically on channels surrounding the pit.

A pressure load is also applied at each strainer module to account for the unbalanced pressure load due to the hole in the top cover plate. A force is applied in the negative Y direction for each module equal to:

$$P_{str} := D_h^2 \cdot DP \qquad P_{str} = 46\ lbf$$

Seismic Loads

Seismic loads are analyzed using the response spectra methodology as described in Section 2.0. Masses are applied to the strainer modules as described in Section 6.3.3. All other masses are based on the GTSTRUDL internally calculated masses based on the member cross section and the density of stainless steel (some density adjustments are made in Section 6.3.8.

Load Combinations

Load combinations are made using GTSTRUDL in accordance with the methodology specified in Sections 2.0 and 3.0. For load combinations involving seismic, four load cases are created in GTSTRUDL. Because the seismic loads in GTSTRUDL are without sign, in order to ensure the worst case combination is considered, one load case adds seismic to the static loads (DW), and a second case subtracts seismic from the static loads for each the X and Z directions. In this way the worst case is ensured, including the effects of compression. The following load combinations are defined and evaluated in GTSTRUDL.

Load Combination #	Load Specifications	GTSTRUDL Designation
Load Combination 1	DW + DEB + DP	'DW+WD+DP'
Load Combination 2	DW + OBE	'DW+OBEX-', 'DW+OBEX+', 'DW+OBEZ-', 'DWOBEZ+'
Load Combination 3	DW + OBE + TOL	'DWTOOBX-', 'DWTOOBX+', 'DWTOOBZ-', 'DWTOOBZ-
Load Combination 4	DW + SSE + TOL	'DWTOSSX-', 'DWTOSSX+', 'DWTOSSZ-', 'DWTOSSZ+'
Load Combination 5	DW + DEB + DP + TAL	'DW+D+P+T'
Load Combination 6	DW + SSE + JIL + DIL	'DW+SSEX-', 'DW+SSEX+', 'DW+SSEZ-', 'DWSSEZ+'

6.3.8 Member Density Adjustments

The model does not include the seal strips, or the portion of the lower deck plate that surrounds the opening. To account for this weight, the density of the top plates and lower deck plates will be manually adjusted.

The weight of the top seal strips is:

$$Wt_{ss} := (t_{strip})\cdot(w_{strip})\cdot(W2)\cdot 25\cdot \rho_{steel} \qquad Wt_{ss} = 521.9\ lbf$$

This will be spread out over the top plates. The volume of the top plates as modeled is:

$$VOL_{tp} := t_{tcp}\cdot\left[w_{tcp}\cdot\left[(L1_{hex})\cdot 46 + (L2_{hex})\cdot 46 + w_{hex.z}\cdot 28 + 6\cdot 19.25\cdot in\right] + 4\cdot 16\cdot in\cdot L2_{hex}\right] \qquad VOL_{tp} = 19811\ in^3$$

This is greater than the actual plates due to overlapping the way the plates were modeled. The actual top cover plate weight is:

$$Wt_{tcp} := \rho_{steel}\cdot t_{tcp}\cdot\left(304\cdot in\cdot 96\cdot in - 2\cdot W1\cdot W2 - 23\cdot\frac{\pi}{4}\cdot D_h^{\,2}\right) \qquad Wt_{tcp} = 3855\ lbf$$

Therefore the density of the top plates is adjusted as follows

$$\rho_{tp} := \frac{Wt_{ss} + Wt_{tcp}}{VOL_{tp}} \qquad \rho_{tp} = 0.221\ \frac{lbf}{in^3}$$

Similarly, for the lower deck plates, the seal strip weight is about the same, however subtracting out the weight of the missing lower deck plates around the sump, the weight of the lower deck plates is:

$$Wt_{ld} := \rho_{steel}\cdot t_{ldp}\cdot[(W1)\cdot(W2)\cdot 25 + 19.25\cdot in\cdot 96\cdot in - (40\cdot in)\cdot(60\cdot in)] \qquad Wt_{ld} = 3631.1\ lbf$$

This will be spread out over the lower deck plates. The approximate volume of the lower deck plates is:

$$VOL_{ld} := (t_{ldp})\cdot\left[(W1)\cdot(W2)\cdot 14 + \left(\frac{W1}{2}\right)\cdot(W2)\cdot 17 + 19.25\cdot in\cdot 96\cdot in\right] \qquad VOL_{ld} = 12444\ in^3$$

Therefore the density of the lower deck plates is input as:

$$\rho_{ld} := \frac{Wt_{ss} + Wt_{ld}}{VOL_{ld}} \qquad \rho_{ld} = 0.334\ \frac{lbf}{in^3}$$

Calculate the weights of the remaining items to determine the total weight to backcheck against the GTSTRUDL model.

Plenum Box Channels

$Wt_{ch} := \rho_{steel} \cdot 0.25 \cdot in \cdot (18 \cdot in) \cdot [2 \cdot (304 \cdot in + 96 \cdot in) + 8 \cdot in + 45 \cdot in + 27 \cdot in - 27 \cdot in]$ $\quad Wt_{ch} = 1113\ lbf$

Tube Steel Posts

$Wt_{ts} := \left(10.58 \cdot \frac{lbf}{ft}\right) \cdot (12 \cdot in) \cdot 14$ $\quad Wt_{ts} = 148\ lbf$

Plate Beams

$Wt_{plate} := \rho_{steel} \cdot \frac{3}{4} \cdot in \cdot 9 \cdot in \cdot (2 \cdot W1) \cdot 2$ $\quad Wt_{plate} = 251\ lbf$

Support Beams

$Wt_{beam} := \left(15 \cdot \frac{lbf}{ft}\right) \cdot W2 \cdot 28$ $\quad Wt_{beam} = 1120\ lbf$

Seal Strips

$Wt_{ss} := 2 \cdot Wt_{ss}$ $\quad Wt_{ss} = 1044\ lbf$

Top Cover Plates $\quad Wt_{tcp} = 3855\ lbf$

Lower Deck Plates $\quad Wt_{ld} = 3631\ lbf$

Total Weight of the Plenum

$Wt_{plen} := Wt_{ch} + Wt_{ts} + Wt_{plate} + Wt_{beam} + Wt_{ss} + Wt_{tcp} + Wt_{ld}$ $\quad Wt_{plen} = 11161\ lbf$

Total Weight of the Strainer Modules

$Wt_{mod} := Wt \cdot N_{mod} + Wt_{ec} \cdot 23$ $\quad Wt_{mod} = 17729\ lbf$

Total Combined Weight, Modules + Plenum

$Wt_{tot} := Wt_{plen} + Wt_{mod}$ $\quad Wt_{tot} = 28890\ lbf$

6.4 GTSTRUDL Results

6.4.1 Member Stresses

The results from the GTSTRUDL run (Attachment B) are provided below. GTSTRUDL performs a code check of all of the members for both the Operating Loads, OBE, and SSE load combinations. The results of the code checks are summarized below. Load Combinations #1&2 are grouped together for simultaneous evaluation because they have similar acceptance criteria and #4 stresses are checked against #3 allowables.

Component	Interaction Ratio		LC #1/2 LC #3/4	LC #5 LC#6
Plenum Box Channels	$IR_{chan} := \frac{(0.17\ \ 0.15\ \ 0.20\ \ 0.14)}{1+(CT^T)}$		$IR_{chan} = (0.17\ \ 0.10\ \ 0.13\ \ 0.11)$	
Lower Deck Plate	$IR_{plate} := \frac{(0.25\ \ 0.17\ \ 0.28\ \ 0.16)}{1+(CT_{rect}^T)}$		$IR_{plate} = (0.25\ \ 0.11\ \ 0.18\ \ 0.13)$	
Plate Beam Over Pit	$IR_{beam} := \frac{(0.24\ \ 0.17\ \ 0.28\ \ 0.16)}{1+(CT_{rect}^T)}$		$IR_{beam} = (0.24\ \ 0.11\ \ 0.18\ \ 0.13)$	
Top Cover Plate	$IR_{tcp} := \frac{(0.46\ \ 0.12\ \ 0.54\ \ 0.12)\cdot\rho_{steel}}{\left[1+\left((CT_{rect})^T\right)\right]\cdot\rho_{tp}}$	*	$IR_{tcp} = (0.60\ \ 0.10\ \ 0.44\ \ 0.13)$	
Support Beams	$IR_{floor} := \frac{(0.06\ \ 0.13\ \ 0.11\ \ 0.09)}{1+(CT^T)}$	**	$IR_{floor} = (0.06\ \ 0.09\ \ 0.07\ \ 0.07)$	
Tube Steel Posts	$IR_{post} := \frac{(0.29\ \ 0.47\ \ 0.27\ \ 0.45)}{1+(CT^T)}$		$IR_{post} = (0.29\ \ 0.31\ \ 0.17\ \ 0.35)$	
Hex Couplings	$IR_{hex} := \frac{(0.19\ \ 0.30\ \ 0.24\ \ 0.28)}{1+(CT^T)}$		$IR_{hex} = (0.19\ \ 0.20\ \ 0.15\ \ 0.22)$	
Support Beam Webs	$IR_{web} := \frac{(.55\ \ 1.41\ \ 1.05\ \ 0.87)}{1+(CT_{rect}^T)}$		$IR_{web} = (0.55\ \ 0.94\ \ 0.66\ \ 0.73)$	

* Top cover plate stresses are conservatively increased by the density ratio to account for the real density of steel which should be used when determining stresses on the top cover plate itself (rather than the reduced density calculated in Section 6.3.8).

** Note 2 of Reference [6f] allows a 2" deep by 4" notch in the flanges of the support beams to clear existing interferences. Based on the very low stresses for the support beams, there is plenty of margin to accommodate a notch in the flanges therefore the support beams are still acceptable with these notches if they are required.

6.4.2 Nodal Displacements

The maximum nodal displacements are reviewed to ensure the displacements are acceptable. The maximum displacements are for the top corners of the strainer modules. These displacements are compared to the gaps between strainers to ensure the strainers do not bump into each other during a seismic event. By review of the displacements from GTSTRUDL (Attachment B), the maximum strainer displacements are as follows:

$\Delta X_{strnr} := 0.42 \cdot in$ (excluding Module AE which is clear both sides in the X-direction)

$\Delta Y_{strnr} := 0.17 \cdot in$

$\Delta Z_{strnr.BD} := 0.43 \cdot in$ $\Delta Z_{strnr.CD} := 0.34 \cdot in$ $\Delta Z_{strnr.AE} := 0.65 \cdot in$ $\Delta Z_{strnr.BE} := 0.30 \cdot in$

(Note in the Z-direction, the worst case is between Strainer Stack BD and CD, and Strainer Stack AE and BE and the top of the BE stack (400 level nodes))

The clear distance between any two adjacent strainer modules is calculated at three points

$w_{B.web} := 3.75 \cdot in$ (Reference [4])

$\theta := \left(\operatorname{atan}\left(\frac{W1}{W2}\right)\right)$ $\theta = 45.00\,deg$

$w_c := 0.5 \cdot in$ (Reference [6o]&[6p])

$r_c := 0.75 \cdot in$ (radius at hex couple)

$t_c := 0.25 \cdot in$ (thickness of flange)

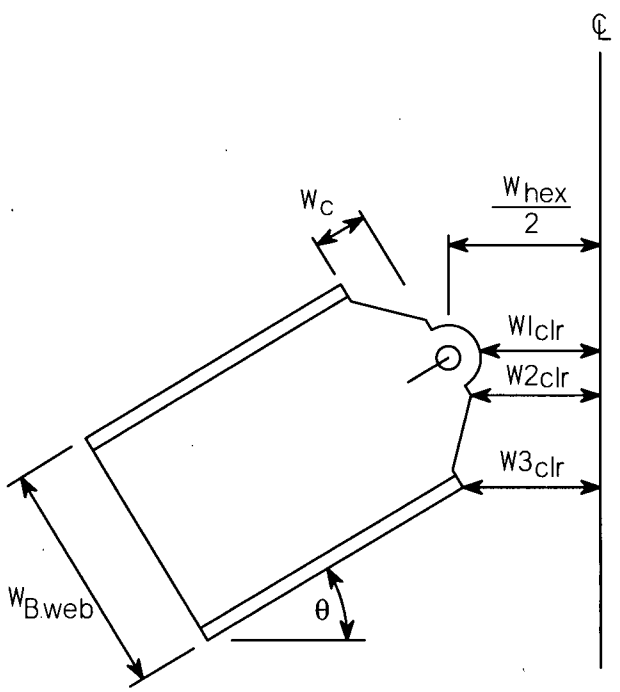

1/2 the clear distance between strainers in the x-direction is calculated at the 3 critical locations

$$w1_{clr.x} := \frac{w_{hex.x}}{2} - r_c \qquad w1_{clr.x} = 0.88\,in$$

$$w2_{clr.x} := \frac{w_{hex.x}}{2} - \left[\frac{w_{B.web}}{2} - \left(w_c + 2\cdot t_c\right)\right]\cdot \sin(\theta) \qquad w2_{clr.x} = 1.01\,in$$

$$w3_{clr.x} := \frac{w_{hex.x}}{2} + w_c\cdot\cos(\theta) - \left(\frac{w_{B.web}}{2}\right)\cdot\cos(\theta) \qquad w3_{clr.x} = 0.65\,in$$

$$w_{clr.x} := \min\left(w1_{clr.x}, w2_{clr.x}, w3_{clr.x}\right) \qquad w_{clr.x} = 0.65\,in$$

Similarly, for the z-direction,

$$w1_{clr.z} := \frac{w_{hex.z}}{2} - r_c \qquad w1_{clr.z} = 0.88\,in$$

$$w2_{clr.z} := \frac{w_{hex.x}}{2} - \left[\frac{w_{B.web}}{2} - \left(w_c + 2\cdot t_c\right)\right]\cdot \cos(\theta) \qquad w2_{clr.z} = 1.01\,in$$

$$w3_{clr.z} := \frac{w_{hex.x}}{2} + w_c\cdot\cos(\theta) - \left(\frac{w_{B.web}}{2}\right)\cdot\sin(\theta) \qquad w3_{clr.z} = 0.65\,in$$

$$w_{clr.z} := \min\left(w1_{clr.z}, w2_{clr.z}, w3_{clr.z}\right) \qquad w_{clr.z} = 0.65\,in$$

Check clearances conservatively considering out of phase motion between the strainers and neglecting plenum displacements (which will be in phase).

$$\Delta_{max.x} := 2\cdot\left(\Delta X_{strnr}\right) \qquad \Delta_{max.x} = 0.84\,in < 2\cdot w_{clr.x} = 1.31\,in$$

$$\Delta_{max.z1} := \left(\Delta Z_{strnr.BD} + \Delta Z_{strnr.CD}\right) \qquad \Delta_{max.z1} = 0.77\,in < 2\cdot w_{clr.z} = 1.31\,in$$

$$\Delta_{max.z2} := \left(\Delta Z_{strnr.AE} + \Delta Z_{strnr.BE}\right) \qquad \Delta_{max.z2} = 0.95\,in < 2\cdot w_{clr.z} = 1.31\,in$$

Therefore, clearance is adequate and the strainers will not impact each other during a seismic event.

6.4.3 Joint Reactions

The model is supported at discrete locations representing the expansion anchors in the support beams. Also, the channel that surrounds the sump pit opening is secured to the curb using welded clips to the embedded angle in the curb, therefore these nodes are also restrained in the Y-direction. The reactions from GTSTRUDL at these anchors nodes are summarized below. In the y-direction, only negative reactions (uplift) are considered.

The support beams are secured to the floor using 9 different details. The anchors and local flange stresses are evaluated for each load case at each joint in the spreadsheet included as Attachment D. The loads for the worst case for each detail type (as determined from the spreadsheet) are summarized below.

Type 1E - X/Y/Z - 4 anchors external (Joint WA28)

$R1E_x := 325 \cdot lbf \cdot 1.29$ $R1E_y := 1545 \cdot lbf$

$R1E_z := 45 \cdot lbf \cdot 1.29$ $M1E_z := 1230 \cdot in \cdot lbf$

Joint WA28
Load Comb 'DW+D+P+T'
See 6.7.1 for conservative factor increase on shear load due to concrete edge distance

Type 2I - X/Y/Z - 4 anchors internal (Joints WA29, WA30, WA31)

$R2I_x := 1810 \cdot lbf$ $R2I_y := 0 \cdot lbf$

$R2I_z := 90 \cdot lbf$ $M2I_z := 5535 \cdot in \cdot lbf$

Joint WA31
Load Comb 'DWTOSSX'

Type 3E - Y - 2 anchors external (Joints WA1 - WA5, WA10, WA11, WA16 WA35 - WA38, WA43)

$R3E_x := 0 \cdot lbf$ $R3E_y := 1915 \cdot lbf$

$R3E_z := 0 \cdot lbf$ $M3E_z := 15 \cdot in \cdot lbf$

Joint WA5
Load Comb 'DW+SSEZ'

Type 3I - Y - 2 anchors internal (Joints WA12 - WA15, WA21, WA22)

$R3I_x := 0 \cdot lbf$ $R3I_y := 345 \cdot lbf$

$R3I_z := 0 \cdot lbf$ $M3I_z := 375 \cdot in \cdot lbf$

Joint WA22
Load Comb 'DW+SSEX'

Type 4E - Y/Z - 2 anchors external (Joints WA23, WA27, WA33)

$R4E_x := 0 \cdot lbf$ $R4E_y := 1000 \cdot lbf$

$R4E_z := 1723 \cdot lbf$ $M4E_z := 48 \cdot in \cdot lbf$

Joint WA23
Load Comb 'DWTOSSZ'

Type 4I - Y/Z - 2 anchors internal (Joints WA24 - WA26, WA32)

$R4I_x := 0 \cdot lbf$ $R4I_y := 0 \cdot lbf$

$R4I_z := 1955 \cdot lbf$ $M4I_z := 20 \cdot in \cdot lbf$

Joint WA24
Load Comb DWTOSSZ'

Type 5E - X/Y - 2 anchors external (Joints WA8, WA9, WA39 - WA41)

$R5E_x := 970 \cdot lbf$ $R5E_y := 800 \cdot lbf$

$R5E_z := 0 \cdot lbf$ $M5E_z := 3080 \cdot in \cdot lbf$

Joint WA9
Load Comb 'DWTOSSX'

Type 6E - X/Y - 3 anchors external (Joints WA7)

$R6E_x := 915 \cdot lbf \cdot 1.29$ $R6E_y := 830 \cdot lbf$

$R6E_z := 0 \cdot lbf$ $M6E_z := 2900 \cdot in \cdot lbf$

Joint WA7
Load Comb 'DWTOSSX'
See 6.7.1 for conservative factor increase on shear load due to concrete edge distance

Type 6I - X/Y - 4 anchors internal (Joints WA18 - WA20)

$R6I_x := 1735 \cdot lbf$ $R6I_y := 0 \cdot lbf$

$R6I_z := 0 \cdot lbf$ $M6I_z := 4855 \cdot in \cdot lbf$

Joint WA20
Load Comb 'DWTOSSX'

These values are put into arrays for simultaneous evaluation

$$RX := \begin{pmatrix} R1E_x \\ R2I_x \\ R3E_x \\ R3I_x \\ R4E_x \\ R4I_x \\ R5E_x \\ R6E_x \\ R6I_x \end{pmatrix} \quad RY := \begin{pmatrix} R1E_y \\ R2I_y \\ R3E_y \\ R3I_y \\ R4E_y \\ R4I_y \\ R5E_y \\ R6E_y \\ R6I_y \end{pmatrix} \quad RZ := \begin{pmatrix} R1E_z \\ R2I_z \\ R3E_z \\ R3I_z \\ R4E_z \\ R4I_z \\ R5E_z \\ R6E_z \\ R6I_z \end{pmatrix} \quad MZ := \begin{pmatrix} M1E_z \\ M2I_z \\ M3E_z \\ M3I_z \\ M4E_z \\ M4I_z \\ M5E_z \\ M6E_z \\ M6I_z \end{pmatrix} \quad N_{bolt} := \begin{pmatrix} 4 \\ 4 \\ 2 \\ 2 \\ 2 \\ 2 \\ 2 \\ 3 \\ 4 \end{pmatrix} \quad b_{f.eff} := \begin{pmatrix} b_{f_1} \\ b_{f_4} \\ b_{f_1} \\ b_{f_3} \\ b_{f_1} \\ b_{f_3} \\ b_{f_1} \\ b_{f_2} \\ b_{f_4} \end{pmatrix}$$

In addition, the plenum channels around the sump boundary are secured by welded clips. The maximum uplift reactions is summarized below by considering the maximum reaction and the deadweight reaction.

$$R6_y := 0.5 \cdot \begin{pmatrix} 850 \\ 1515 \end{pmatrix} \cdot lbf \quad \begin{matrix} OBE \\ SSE \end{matrix} \quad \text{Joint TC29}$$

Note the load is divided by two because there are two clips at this controlling location at the corner joint around the sump curb, per Reference [6ab].

6.4.4 Member Forces

Member forces and moments are extracted from the model for certain groups to be used in hand calculations in the qualification of various connections. Theses member forces from GTSTRUDL (Attachment B) and are summarized below. Forces and Moments are reported for two cases. Case 1 envelopes Load Combinations #1 and #2 which are qualified to standard AISC allowables. Case 2 envelopes Load Combinations #3 through #6 which are allowed a minimum of a 1.5 bump up factor over AISC allowables (except for the restrictions noted in Section 3.0).

Hex Coupling Reactions

The maximum axial force and shear forces for the hex coupling members are summarized below. These are used for the qualification of the bolts that hold down the strainers and secure the top cover plate. The maximum shear reactions are taken from Members 'PRGD1' through 'PRGD92' or Members 'HEX1' to 'HEX92'. The 'PRGD' members are the rigid links directly under the hex couplings. Using shears from these members accounts for shear loads transferred through the top cover plates to the bolts. The maximum tension and moment come only from Members 'HEX1' to 'HEX92'

$F_{x.hex} := \begin{pmatrix} 1265 \\ 2035 \end{pmatrix} \cdot lbf$	Load Comb. #1&2 Load Comb. #3-6	Member HEX7 Member HEX7	(Neglect Load Comb. #1 which is compression)
$F_{y.hex} := \begin{pmatrix} 555 \\ 880 \end{pmatrix} \cdot lbf$	Load Comb. #1&2 Load Comb. #3-6	Member PRGD22 Member PRGD22	
$F_{z.hex} := \begin{pmatrix} 810 \\ 1065 \end{pmatrix} \cdot lbf$	Load Comb. #1&2 Load Comb. #3-6	Member PRGD56 Member PRGD22	
$M_{y.hex} := 535 \cdot in \cdot lbf$	All Load Comb.	Member HEX22	
$M_{z.hex} := 440 \cdot in \cdot lbf$	All Load Comb.	Member HEX22	

Plenum Box Reactions

The plenum box edge channels are bolted to the support beams using 1/2" bolts. The reactions to be transferred through these bolts is taken from the rigid links that attach the channels to the support beams. These are GTSTRUDL members RIGD111-RIGD136. The Fx loads are taken as the maximum tension loads on the connection.

Three cases are examined; the first row is for the enveloped worst case loads for all members excluding all SSE load combinations, the 2nd row is for SSE for Member RIGD125 (Z earthquake) only. RIGD125 is a four bolt inside corner connection (see Reference [6w]). The third row is for SSE for Member RIGD117 (X earthquake) only. Per Attachment F, Members RIGD125 and RIGD117 have the controlling bolt tension loads for the inside corner, and edge connections respectively. Outside corner joints only have one bolt, but the outside corners do not control per Attachment F. Note that negative Fx numbers represent tension, and positive Fx numbers are compression.

$$F_{x.box} := \begin{pmatrix} -1165 \\ 260 \\ -865 \end{pmatrix} \cdot lbf \quad \begin{matrix} \text{(Member RIGD117)} \\ \text{(Member RIGD125-Z)} \\ \text{(Member RIGD117-X)} \end{matrix} \qquad M_{x.box} := \begin{pmatrix} 2110 \\ 1840 \\ 590 \end{pmatrix} \cdot in \cdot lbf \quad \begin{matrix} \text{(Member RIGD135)} \\ \text{(Member RIGD125-Z)} \\ \text{(Member RIGD117-X)} \end{matrix}$$

$$F_{y.box} := \begin{pmatrix} 720 \\ 120 \\ 685 \end{pmatrix} \cdot lbf \quad \begin{matrix} \text{(Member RIGD118)} \\ \text{(Member RIGD125-Z)} \\ \text{(Member RIGD117-X)} \end{matrix} \qquad M_{y.box} := \begin{pmatrix} 0 \\ 7335 \\ 0 \end{pmatrix} \cdot in \cdot lbf \quad \begin{matrix} \text{(My is released)} \\ \text{(Member RIGD125-Z)} \\ \text{(My is released)} \end{matrix}$$

$$F_{z.box} := \begin{pmatrix} 900 \\ 565 \\ 310 \end{pmatrix} \cdot lbf \quad \begin{matrix} \text{(Member RIGD122)} \\ \text{(Member RIGD125-Z)} \\ \text{(Member RIGD117-X)} \end{matrix} \qquad M_{z.box} := \begin{pmatrix} 1820 \\ 140 \\ 3510 \end{pmatrix} \cdot in \cdot lbf \quad \begin{matrix} \text{(Member RIGD117)} \\ \text{(Member RIGD125-Z)} \\ \text{(Member RIGD117-X)} \end{matrix}$$

Note for Members 'RIGD122' and 'RIGD123', Y and Z are switched from the GTSTRUDL run compared to what is summarized above. These members are for the short ends and their local coordinate system is rotated 90 degrees compared to the other similar members.

Tube Steel Post Reactions

The tube steel posts are welded to the seal strips, which are in turn bolted to the support beams using 1/2" bolts. The reactions to be transferred through these welds and bolts are taken from the reactions at the ends of the tube steel posts These are GTSTRUDL members TS1 - TS19. The worst case reactions for these members are showr below. Note for reactions at nodes starting with a "P" do not apply as theses are at the connection to the pit spanning beams. For the axial load (Fx) the pressure load case is not considered since this is compression and the connection design is only concerned about tension.

$F_{x.post} := \begin{pmatrix} 0 \\ 190 \end{pmatrix} \cdot lbf$ (Member TS3) (Tension only)

$M_{x.post} := \begin{pmatrix} 105 \\ 120 \end{pmatrix} \cdot in \cdot lbf$ (Member TS5)

$F_{y.post} := \begin{pmatrix} 1370 \\ 2085 \end{pmatrix} \cdot lbf$ (Member TS13)

$M_{y.post} := \begin{pmatrix} 3620 \\ 4670 \end{pmatrix} \cdot in \cdot lbf$ (Member TS19)

$F_{z.post} := \begin{pmatrix} 1170 \\ 2015 \end{pmatrix} \cdot lbf$ (Member TS13)

$M_{z.post} := \begin{pmatrix} 4155 \\ 4425 \end{pmatrix} \cdot in \cdot lbf$ (Member TS15) (Member TS19)

Plenum Box Channel Loads

The plenum box channels are not continuous. They have bolted field joints connected with 1/2" diameter bolts. The reactions to be transferred through these bolted connections are taken as the maximum axial and Z-shear forces in these channels. The moments are released at the splices, except for torsion, and Local Mz at a few select locations. The splices are at the GTSTRUDL Member numbers shown below. The splice is on the end with the moment release, therefore loads are only taken from those ends. The worst case reactions for these members are shown below

$F_{x.chan} := \begin{pmatrix} 255 \\ 450 \end{pmatrix} \cdot lbf$ (Member PCHAN25)

$F_{z.chan} := \begin{pmatrix} 365 \\ 45 \end{pmatrix} \cdot lbf$ (Member PCHAN2) (Member PCHAN14)

$M_{x.chan} := \begin{pmatrix} 1325 \\ 2235 \end{pmatrix} \cdot in \cdot lbf$ (Member PCHAN8)

$M_{z.chan} := \begin{pmatrix} 6420 \\ 10860 \end{pmatrix} \cdot in \cdot lbf$ (Member PCHAN8)

Member No.

PCHAN2
PCHAN6
PCHAN8
PCHAN11
PCHAN13
PCHAN14
PCHAN15
PCHAN16
PCHAN19
PCHAN20
PCHAN21
PCHAN23
PCHAN25
PCHAN28

Plenum Box Channel Loads at Curb

The plenum box channels at the curb form a box around the opening running along the curb. The channels are welded together at the two corners and then bolted to the main sections of the plenum.

Reactions at the Curb Section (PCHAN6 (Jt. C28) & PCHAN8 (Jt. C29))

$F_{x.curb} := \begin{pmatrix} 355 \\ 15 \end{pmatrix} \cdot lbf$ $\quad M_{x.curb} := \begin{pmatrix} 1325 \\ 2235 \end{pmatrix} \cdot in \cdot lbf$

$F_{y.curb} := \begin{pmatrix} 0 \\ 0 \end{pmatrix} \cdot lbf$ (Connection does not transfer vertical load, they go to the curb) $\quad M_{y.curb} := \begin{pmatrix} 1940 \\ 155 \end{pmatrix} \cdot in \cdot lbf$

$F_{z.curb} := \begin{pmatrix} 285 \\ 20 \end{pmatrix} \cdot lbf$ $\quad M_{z.curb} := \begin{pmatrix} 55 \\ 90 \end{pmatrix} \cdot in \cdot lbf$

Plate Beam Reactions

There are two plate beams spanning over the opening in the sump pit which carries the load to adjacent tube steel posts. This beams are connected to plates using two 1/2" bolts. The plates are in turn welded to the adjacent tube steel posts. The beams are modeled as a pinned-pinned beams. These are members PLATE38 - PLATE41

$F_{x.beam} := \begin{pmatrix} 2695 \\ 4550 \end{pmatrix} \cdot lbf$ (Member PLATE39)

$F_{y.beam} := \begin{pmatrix} 1220 \\ 685 \end{pmatrix} \cdot lbf$ (Member PLATE39)

(Note Fz loads are negligible)

6.5 Member Evaluation

Most of the members are evaluated and qualified by GTSTRUDL in the code checks. The code check summary is provided in Section 6.4.1. There are a few members which require supplemental hand calculations. These members are evaluated in this section.

6.5.1 Plenum Box Channel Evaluation

The plenum box channels are evaluated and qualified in GTSTRUDL for global loads, however there is a local effect on the webs of the channels under differential pressure that also needs to be considered. This local effect is not considered within GTSTRUDL. The web of the channel needs to resist the pressure loads in bending between the flanges. The channel is actual comprised of a cut tube steel. The combined stresses in the web of the channel for Load Combination # 6 pressure are calculated below:

$L_{web} := 12 \cdot in$ (Cut Tube Steel 12 x 6 x 1/4)

$t_{web} := 0.25 \cdot in$

$DP = 1.52\ psi$

The local stress in the channel comes from a combined compression plus local bending. The compression load is calculated as a force per unit length based on the tributary load acting on the top cover plate and lower deck plate. This load per unit length is

$w_{web} := DP \cdot \frac{W2}{2}$ $\quad w_{web} = 24.28 \frac{lbf}{in}$

$A_{web} := t_{web}$ $\quad A_{web} = 0.25 \frac{in^2}{in}$

$r_{web} := \sqrt{\frac{t_{web}^2}{12}}$ $\quad r_{web} = 0.07\,in$

$S_{web} := \frac{1}{6} \cdot t_{web}^2$ $\quad S_{web} = 0.0104 \frac{in^3}{in}$

$M_{web} := \frac{DP \cdot L_{web}^2}{8}$ $\quad M_{web} = 27.31 \frac{in \cdot lbf}{in}$

The web is in compression, therefore, the compression allowable per Reference [21] will be used.

$KLR_{web} := \frac{1.0 \cdot L_{web}}{r_{web}}$ $\quad KLR_{web} = 166.28$ $\quad C_c = 146.30$

$$F_{a.web} := \text{if}\left[KLR_{web} > C_c, S_{y.a}\cdot\left(0.40 - \frac{1}{600}\cdot KLR_{web}\right), \frac{S_{y.a}}{2.15} - \left(\frac{\frac{S_{y.a}}{2.15} - 6}{120}\right)\cdot KLR_{web}\right]\cdot ksi \quad F_{a.web} = 3.13\,ksi$$

$f_{a.web} := \frac{w_{web}}{A_{web}}$ $\quad f_{a.web} = 0.097\,ksi$ $\quad \frac{f_{a.web}}{F_{a.web}} = 0.03 \quad < 0.15$

$f_{b.web} := \frac{M_{web}}{S_{web}}$ $\quad f_{b.web} = 2.62\,ksi$

$F_{b.web} := 0.75 \cdot S_{ya}$ $\quad F_{b.web} = 19.13\,ksi$

$IR_{chan.web} := \frac{f_{a.web}}{F_{a.web}} + \frac{f_{b.web}}{F_{b.web}}$ $\quad IR_{chan.web} = 0.17$

6.5.2 Lower Deck Plate Evaluation at Spill-Over Opening

The lower deck plates have holes at one end to allow drainage of the plenum. The deck plates are modeled as solid plates in GTSTRUDL, therefore the local effects around these holes is considered by manual calculations. The size and location of the holes is per Reference [6u].

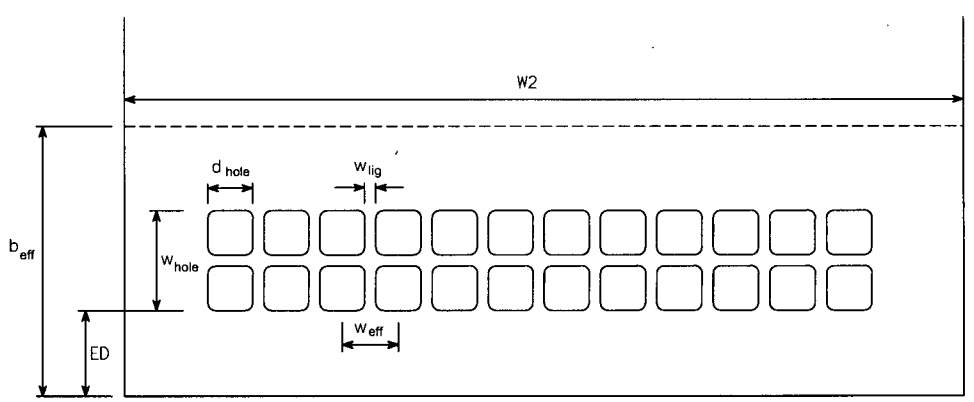

Figure 6.5-1 Spill Over Holes

The dimensions for the holes are shown on Reference [6u]

$w_{lig} := 0.5 \cdot in$

$d_{hole} := 2 \cdot in$

Therefore the total width of 2 rows of holes is

$w_{hole} := 2 \cdot d_{hole} + w_{lig}$ $\qquad w_{hole} = 4.50\,in$

The load acting on the area occupied by the holes needs to be carried by the plate section on either side of the holes. The edge distance from the holes to the sides of the plate is about 6". Consider this edge distance, and an additional 6" on the other side of the holes to carry the load for the whole section. The overall width of the section is

$ED := 6 \cdot in$ $\qquad ED = 6.00\,in$

$b_{eff} := 2 \cdot ED + w_{hole}$ $\qquad b_{eff} = 16.50\,in$

The moment for this cross section is

$M_{net} := \frac{1}{8} \cdot DP \cdot b_{eff} \cdot W2^2$ $\qquad M_{net} = 3205\,in \cdot lbf$

The section modules for the net section is

$S_{net} := \frac{1}{6} \cdot \left(b_{eff} - 2 \cdot d_{hole}\right) \cdot t_{ldp}^2$ $\qquad S_{net} = 0.521\,in^3$

The stress in the plate is calculated by determining the bending stress. An additional axial stress is considered due to thermal loads in the plate. Reviewing the GTSTRUDL output, the maximum axial force in any of these plates is less than 1000 lbs. Therefore, the total stress in the plate is calculated as:

$\sigma_{net} := \frac{M_{net}}{S_{net}} + \frac{1000 \cdot lbf}{t_{ldp} \cdot b_{eff}}$ $\qquad \sigma_{net} = 6.27\,ksi$

$IR_{net} := \frac{\sigma_{net}}{0.75 \cdot S_{ya}} + IR_{plate_{1,4}}$ $\qquad IR_{net} = 0.46$

The ligaments between holes need to carry the pressure across the width of the section. Considering a pinned pinned beam across the width of the section.

$w_{eff} := d_{hole} + w_{lig}$ $\qquad w_{eff} = 2.50\,in$

$M_{lig} := \frac{1}{8} \cdot w_{eff} \cdot DP \cdot w_{hole}^2$ $\qquad M_{lig} = 9.60\,in \cdot lbf$

$S_{lig} := \frac{1}{6} \cdot w_{lig} \cdot t_{ldp}^2$ $\qquad S_{lig} = 0.0208\,in^3$

$\sigma_{lig} := \frac{M_{lig}}{S_{lig}} + \frac{1000 \cdot lbf}{t_{ldp} \cdot b_{eff}}$ $\qquad \sigma_{lig} = 0.58\,ksi$

$IR_{lig} := \frac{\sigma_{lig}}{0.75 \cdot S_{ya}}$ $\qquad IR_{lig} = 0.03$

Perforated plate is installed over these holes. The pressure that needs to be carried by the perforated plate is the same pressure that the strainer modules are designed for. The perforated plate used to cover these holes is the same perforated plate that is used in the strainer modules The unsupported span for the perforated plate between the strainer disks, and the spill over is compared below:

Span for disk modules	$L_s := 3.21 \cdot in$	(Section 6.7.1 of Reference [4])
Span for spill over	$d_{hole} = 2.00\,in$	(from above)

Since the span that the perforated plate over the holes is less than the span between stiffeners for the modules themselves, and the pressure is the same, the perforated plate is qualified in comparison to the perforated plate used for the disk faces of the strainer modules.

6.6 Connection Evaluations

The bolted and welded connections of the substructure (plenum) are evaluated in this section. This includes the bolts/studs that connect the strainer modules to the substructure, the bolts that connect the plenum box channels to the support beams, the bolts that connect the various sections of the plenum box to one another, and the bolted connection of the plate beam that spans over sump pit opening.

$h := 1 .. 2$ (two enveloping combinations are evaluated as described in Section 6.4.4)

6.6.1 Strainer to Substructure Connection Bolts and Studs

The strainer is bolted to the plenum structure using 1/2" diameter bolts or studs. The maximum loads at these locations is extracted from GTSTRUDL and summarized in Section 6.4.4. The maximum shear per bolt or stud, includes shear loads transferred from the top cover plate, is:

$$V_{strnr.bolt} := \sqrt{F_{y.hex}^2 + F_{z.hex}^2} \qquad V_{strnr.bolt} = \begin{pmatrix} 982 \\ 1382 \end{pmatrix} lbf$$

The maximum tension includes a prying force due to the moment in the hex couple. The hex couple is pinned at the top. The moment in the hex couple is taken at the base of the hex couple. See Figure 6.6-1 for a depiction of this connection.

$$T_{strnr.bolt} := F_{x.hex} + \frac{\sqrt{M_{y.hex}^2 + M_{z.hex}^2}}{\frac{1.156 \cdot in}{2}} \qquad T_{strnr.bolt} = \begin{pmatrix} 2463 \\ 3233 \end{pmatrix} lbf$$

The nominal bolt/stud area:

$$A_{bolt} := \frac{\pi}{4} \cdot (0.5 \cdot in)^2 \qquad A_{bolt} = 0.196\, in^2$$

Bolts/studs are qualified in accordance with the ASCE 8-02 standard (Reference [22]) which provides allowables for stainless steel bolting. The bolts are A-193 Grade B8, Class 2 bolts and the studs are A-276, Type 304 Condition B studs. Per Table 6 of Reference [22] both the bolts and studs have the same allowables. Using the factors of safety per Table D for allowable stress design, the allowable stresses are:

$$F_{t.bolt} := \begin{pmatrix} \frac{93.7}{3.0} \\ \frac{1.6 \cdot 93.7}{3.0} \end{pmatrix} \cdot ksi \qquad F_{t.bolt} = \begin{pmatrix} 31.23 \\ 49.97 \end{pmatrix} ksi$$

$$F_{v.bolt} := \begin{bmatrix} \frac{56.2}{3.0} \\ \frac{(1 + CT_2)\cdot 56.2}{3.0} \end{bmatrix} \cdot ksi \qquad F_{v.bolt} = \begin{pmatrix} 18.73 \\ 28.10 \end{pmatrix} ksi$$

The bolt/stud stresses are:

$$\sigma_{bolt} := \frac{T_{strnr.bolt}}{A_{bolt}} \qquad \sigma_{bolt} = \begin{pmatrix} 12.55 \\ 16.47 \end{pmatrix} ksi$$

$$\tau_{bolt} := \frac{V_{strnr.bolt}}{A_{bolt}} \qquad \tau_{bolt} = \begin{pmatrix} 5.00 \\ 7.04 \end{pmatrix} ksi$$

The temperature affect on the material property of the bolts/studs is included in the design. Since seismic controls the maximum normal operating temperature of 140 degrees F is used. The tensile strength reduction for the bolt/stud material is taken as the same reduction that applies for Type 304 stainless steel.

$$\beta 1 := \frac{S_{uo}}{S_{uc}} \qquad \beta 1 = 0.98 \qquad \text{(@ 140 degrees F)}$$

$$\beta 2 := \frac{S_{ua}}{S_{uc}} \qquad \beta 2 = 0.95 \qquad \text{(@ 190 degrees F)}$$

$$F_t := 1.25\cdot F_{t.bolt}\cdot \beta 1 - 2.4\cdot \tau_{bolt} \qquad F_t = \begin{pmatrix} 26.21 \\ 44.25 \end{pmatrix} ksi$$

$$F_{t.bolt_h} := \min\left(F_{t.bolt_h}, F_{t_h}\right) \qquad F_{t.bolt} = \begin{pmatrix} 26.21 \\ 44.25 \end{pmatrix} ksi$$

$$IR_{strnr.bolt_h} := \max\left(\frac{\sigma_{bolt_h}}{F_{t.bolt_h}}, \frac{\tau_{bolt_h}}{F_{v.bolt_h}}\right) \qquad IR_{strnr.bolt} = \begin{pmatrix} 0.48 \\ 0.37 \end{pmatrix}$$

Required Preload

The bolt/stud must be preloaded to ensure the joint doesn't separate during a seismic event. Using a methodology similar to that used for the spacer separation check in Section 6.4.8 of Reference [4]. Preload relaxation is not considered in this case because this joint is less likely to experience preload relaxation in comparison to the strainer tension rods.

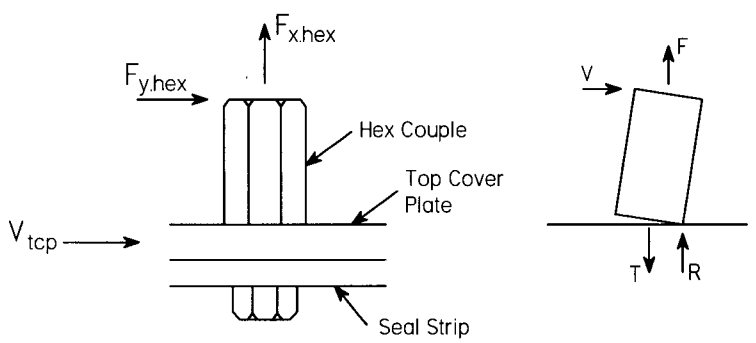

Figure 6.6-1 Hex Couple Connection

To determine the required torque to prevent joint separation, examine the free body diagram of the hex couple above. The stud tension (T) initially is equal to the preload, which is also equal to the prying force (R). As the connection is loaded, the tension force from the strainer (F) effectively reduces the reaction force (R) by almost the exact magnitude (there will be slight differences due to the various stiffnesses of the bolts and connecting members). The stud tension (T) essentially remains equal to the initial preload until the point where the joint separates. In order to prevent joint separation, the preload must be greater than the applied force (F), but in addition, the preload must be sufficient to resist the moment resulting from the shear force (V). By summing the moments about the corner prying point of the hex couple, the stud tension (T), or the preload, times the lever arm, must exceed the moment in the hex couple due to the shear load (V). Therefore, the required preload is calculated based on the following formula.

$K_{nf} := 0.3$ (from Reference [4])

$$T_{req} := \frac{\max\left(F_{x.hex_2}, \frac{\sqrt{M_{y.hex}^2 + M_{z.hex}^2}}{\frac{1.156 \cdot in}{2}}\right) \cdot OD_{bolt} \cdot K_{nf}}{0.85 \cdot 0.80}$$

$T_{req} = 37.4$ ftlbf

Use 40 ft-lbs plus or minus 15%

where:

(0.85 for under torque tolerance)
(0.80 for torque to preload conversion uncertainty)

6.6.2 Plenum Box Channel to Support Beam Connection

The plenum box channels are bolted to the support beams using two 1/2" diameter bolts. The maximum loads at these locations are extracted from GTSTRUDL and summarized in Section 6.4.4. The maximum shear and tension per bolt is:

$$S_{bolt} := \begin{pmatrix} 3.25 \cdot in \\ 6.5 \cdot in \\ 3.25 \cdot in \end{pmatrix}$$

$$N_{bolt.pb} := \begin{pmatrix} 2 \\ 4 \\ 2 \end{pmatrix}$$

(2 bolts for most connections, 4 bolts for the inside corners (outside corners have 1 bolt but do not control))

$$T_{chan.bolt} := \frac{-F_{x.box}}{N_{bolt.pb}} + \frac{M_{z.box}}{3.25 \cdot in} + \frac{M_{y.box}}{S_{bolt}}$$

$$T_{chan.bolt} = \begin{pmatrix} 1143 \\ 1107 \\ 1513 \end{pmatrix} lbf$$

OBE
SSE (Inside Corners)
SSE (Worst Case 'RIGD117')

$$V_{chan.bolt} := \sqrt{\left(\frac{F_{y.box}}{2}\right)^2 + \left(\frac{F_{z.box}}{2} + \frac{M_{x.box}}{3.25 \cdot in}\right)^2}$$

$$V_{chan.bolt} = \begin{pmatrix} 1157 \\ 851 \\ 480 \end{pmatrix} lbf$$

Determine prying force based on AISC methodology (Page 4-91 of Reference [25])

$d := 0.5 \cdot in$ (bolt diameter)

$d' := 0.5625 \cdot in$ (bolt hole diameter)

$t_{ch} := 0.25 \cdot in$ (channel flange thickness)

$a := 1.625 \cdot in$ $\quad a = 1.63\,in$ (Reference [6w])

$b := 3 \cdot in - a - t_{ch}$ $\quad b = 1.12\,in$

$a' := a + \frac{d}{2}$ $\quad a' = 1.88\,in$

$b' := b - \frac{d}{2}$ $\quad b' = 0.87\,in$

$p := \frac{w_{hex.x}}{2} + 6in$ $\quad p = 7.63\,in$ Consider an effective width that extends from the center of the bolt pattern 6" beyond the bolt in question.

$\rho := \frac{b'}{a'}$ $\quad \rho = 0.47$

$\delta := 1 - \frac{d'}{p}$ $\quad \delta = 0.93$

$z := 1..3$

$\alpha_z := \max\left[\frac{1}{\delta}\cdot\left(\frac{8\cdot T_{chan.bolt_z}\cdot b'}{t_{ch}^2\cdot p\cdot S_{ya}} - 1\right), 0\right]$ $\quad \alpha = \begin{pmatrix} 0.00 \\ 0.00 \\ 0.00 \end{pmatrix}$ Solve for α by substituting in the variables for t_c

$Q := \frac{\delta\cdot\alpha\cdot\rho\cdot t_{ch}^2\cdot p\cdot S_{ya}}{8\cdot b'}$ $\quad Q = \begin{pmatrix} 0 \\ 0 \\ 0 \end{pmatrix} lbf$ No prying

$T_{chan.tot} := T_{chan.bolt} + Q$ $\quad T_{chan.tot} = \begin{pmatrix} 1143 \\ 1107 \\ 1513 \end{pmatrix} lbf$

$M_{ch} := T_{chan.tot}\cdot b - Q\cdot(a + b)$ $\quad M_{ch} = \begin{pmatrix} 1285 \\ 1245 \\ 1702 \end{pmatrix} in\cdot lbf$

The bolt stresses are:

$\tau_{chan.bolt} := \frac{V_{chan.bolt}}{A_{bolt}}$ $\quad \tau_{chan.bolt} = \begin{pmatrix} 5.89 \\ 4.33 \\ 2.45 \end{pmatrix} ksi$

$\sigma_{chan.bolt} := \frac{T_{chan.tot}}{A_{bolt}}$ $\quad \sigma_{chan.bolt} = \begin{pmatrix} 5.82 \\ 5.64 \\ 7.70 \end{pmatrix} ksi$

$F_{t.bolt.ch} := F_{t.bolt}$ $\quad F_{t.bolt.ch_3} := F_{t.bolt_2}$ $\quad F_{t.bolt.ch} = \begin{pmatrix} 26.21 \\ 44.25 \\ 44.25 \end{pmatrix}$ ksi

$F_{v.bolt.ch} := F_{v.bolt}$ $\quad F_{v.bolt.ch_3} := F_{v.bolt_2}$ $\quad F_{v.bolt.ch} = \begin{pmatrix} 18.73 \\ 28.10 \\ 28.10 \end{pmatrix}$ ksi

$F_{t.ch} := 1.25 \cdot F_{t.bolt.ch} \cdot \beta 1 - 2.4 \cdot \max(\tau_{chan.bolt})$ $\quad F_{t.ch} = \begin{pmatrix} 17.92 \\ 39.99 \\ 39.99 \end{pmatrix}$ ksi

$F_{tv.bolt_z} := \min(F_{t.bolt.ch_z}, F_{t.ch_z})$ $\quad F_{tv.bolt} = \begin{pmatrix} 17.92 \\ 39.99 \\ 39.99 \end{pmatrix}$ ksi

$IR_{chan.bolt_z} := \max\left(\frac{\sigma_{chan.bolt_z}}{F_{tv.bolt_z}}, \frac{\tau_{chan.bolt_z}}{F_{v.bolt.ch_z}}\right)$ $\quad IR_{chan.bolt} = \begin{pmatrix} 0.32 \\ 0.15 \\ 0.19 \end{pmatrix}$

The flange of the channel is evaluated for local bending stress due to maximum tension in the bolt.

$S_{chan.flg} := \frac{p \cdot t_{ch}^2}{6}$ $\quad S_{chan.flg} = 0.0794\ in^3$

$\sigma_{chan.flg} := \frac{M_{ch}}{S_{chan.flg}}$ $\quad \sigma_{chan.flg} = \begin{pmatrix} 16.18 \\ 15.67 \\ 21.42 \end{pmatrix}$ ksi

$IR_{chan.flg} := \frac{\sigma_{chan.flg}}{\begin{pmatrix} 0.75 \cdot S_{ya} \\ 0.90 \cdot S_{ya} \\ 0.90 \cdot S_{ya} \end{pmatrix}}$ $\quad IR_{chan.flg} = \begin{pmatrix} 0.85 \\ 0.68 \\ 0.93 \end{pmatrix}$

OBE (Worst Case Envelope)
SSE (Inside Corners RIGD 125)
SSE (Worst Case Mem RIGD117)

6.6.3 Tube Steel Post to Seal Strip Connections

The tube steel post are welded to the seal strips, which are in turn bolted to the support beams. First the welded connection is evaluated. The weld is an all around 3/16" fillet weld. The forces and moments at these connections are summarized in Section 6.3.4.

The geometry and properties of the weld are calculated below:

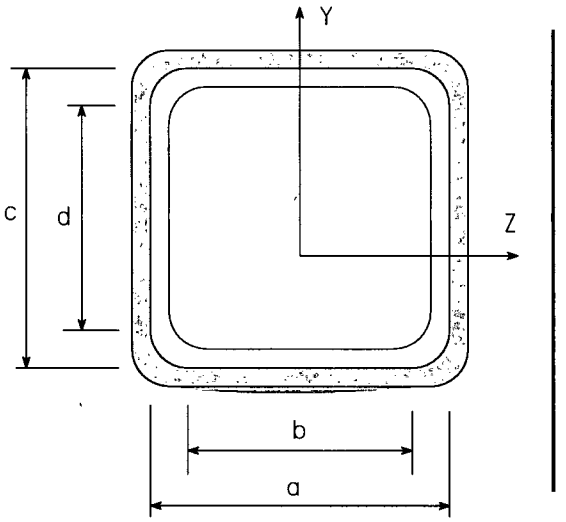

The overall dimensions of the tube are:

$a := 3in$ $\qquad$ $c := 3in$

The flat sides of the tube are

$b := 3 \cdot in - 4 \cdot \left(\frac{5}{16} \cdot in\right)$ $\qquad$ $b = 1.75\,in$

$d := 3 \cdot in - 4 \cdot \left(\frac{5}{16} \cdot in\right)$ $\qquad$ $d = 1.75\,in$

$t_w := 0.1875in$

$A_w := 2(b + d - .858 \cdot 2 \cdot t_w)$ $\qquad$ $A_w = 6.36\,in$

$S_{wy} := \frac{2}{b} \cdot \left[\frac{a^3}{6} + .5 \cdot c \cdot b^2 + \pi \cdot t_w \cdot a^2 + 8 \cdot t_w^2 (2 \cdot a + \pi \cdot t_w)\right]$ $\qquad$ $S_{wy} = 18.57\,in^2$

(Ref. [13])

$S_{wz} := \frac{2}{d} \cdot \left[\frac{c^3}{6} + .5 \cdot a \cdot d^2 + \pi \cdot t_w \cdot c^2 + 8 \cdot t_w^2 (2 \cdot c + \pi \cdot t_w)\right]$ $\qquad$ $S_{wz} = 18.57\,in^2$

$C_y := \frac{d}{2}$ $\qquad$ $C_y = 0.87\,in$

$C_z := \frac{b}{2}$ $\qquad$ $C_z = 0.87\,in$

$J_w := S_{wy} \cdot C_z + S_{wz} \cdot C_y$ $\qquad$ $J_w = 32.50\,in^3$

$e_w := \frac{t_w}{\sqrt{2}}$ $\qquad$ $e_w = 0.133\,in$

The stresses in the weld treated as a line are:

$$f_{x.w} := \frac{F_{x.post}}{A_w} + \frac{M_{z.post}}{S_{wz}} + \frac{M_{y.post}}{S_{wy}} \qquad f_{x.w} = \begin{pmatrix} 419 \\ 520 \end{pmatrix} \frac{lbf}{in}$$

$$f_{y.w} := \frac{F_{y.post}}{A_w} + \frac{M_{x.post} \cdot C_z}{J_w} \qquad f_{y.w} = \begin{pmatrix} 218 \\ 331 \end{pmatrix} \frac{lbf}{in}$$

$$f_{z.w} := \frac{F_{z.post}}{A_w} + \frac{M_{x.post} \cdot C_y}{J_w} \qquad f_{z.w} = \begin{pmatrix} 187 \\ 320 \end{pmatrix} \frac{lbf}{in}$$

$$f_{r.w} := \sqrt{f_{x.w}^2 + f_{y.w}^2 + f_{z.w}^2} \qquad f_{r.w} = \begin{pmatrix} 508 \\ 694 \end{pmatrix} \frac{lbf}{in}$$

The Allowable Stress in the weld is per AISC (Reference [9]). Note that the tensile strength for the stainless steel weld electrodes (ER308 or ER308L) is 75 ksi per Reference [19].

$$S_{uw} = 75.00\ ksi$$

$$F_w := .3 \cdot S_{uw} \cdot e_w \qquad F_w = 2983 \frac{lbf}{in} \qquad \text{(effective throat)}$$

$$F_{w.bm} := 0.4 \cdot S_{ya} \cdot t_w \qquad F_{w.bm} = 1912 \frac{lbf}{in} \qquad \text{(base metal shear)}$$

$$F_w := \min(F_w, F_{w.bm})$$

$$F_{w3.16} := \begin{bmatrix} F_w \\ (1 + CT_2) \cdot F_w \end{bmatrix} \qquad F_{w3.16} = \begin{pmatrix} 1912.5 \\ 2868.7 \end{pmatrix} \frac{lbf}{in}$$

The Interaction Ratio of the weld for the tube steel post to the seal strip is:

$$IR_{w.post_h} := \frac{f_{r.w_h}}{F_{w3.16_h}} \qquad IR_{w.post} = \begin{pmatrix} 0.27 \\ 0.24 \end{pmatrix}$$

These same forces and moments need to be transferred from the tube steel post, through the seal strip, and into the support beams. Using these forces and moments, the bolt shear and tension is calculated below:

$$T_{post.bolt} := \frac{F_{x.post}}{4} + \frac{\max(M_{y.post}, M_{z.post})}{\sqrt{w_{hex.x}^2 + w_{hex.z}^2}} \qquad T_{post.bolt} = \begin{pmatrix} 1016 \\ 1064 \end{pmatrix} lbf$$

$$V_{post.bolt} := \frac{\sqrt{F_{y.post}^2 + F_{z.post}^2}}{4} + \frac{M_{x.post}}{2 \cdot \sqrt{w_{hex.x}^2 + w_{hex.z}^2}} \qquad V_{post.bolt} = \begin{pmatrix} 462 \\ 738 \end{pmatrix} lbf$$

The bolt stresses are:

$$\tau_{post.bolt} := \frac{V_{post.bolt}}{A_{bolt}} \qquad \tau_{post.bolt} = \begin{pmatrix} 2.35 \\ 3.76 \end{pmatrix} ksi$$

$$\sigma_{post.bolt} := \frac{T_{post.bolt}}{A_{bolt}} \qquad \sigma_{post.bolt} = \begin{pmatrix} 5.17 \\ 5.42 \end{pmatrix} ksi$$

$$F_{t.post.bolt} := 1.25 \cdot F_{t.bolt} \cdot \beta 2 - 2.4 \cdot \tau_{post.bolt} \qquad F_t = \begin{pmatrix} 26.21 \\ 44.25 \end{pmatrix} ksi$$

$$F_{t.post.bolt_h} := \min(F_{t.bolt_h}, F_{t_h}) \qquad F_{t.bolt} = \begin{pmatrix} 26.21 \\ 44.25 \end{pmatrix} ksi$$

$$IR_{post.bolt_h} := \max\left(\frac{\sigma_{post.bolt_h}}{F_{t.post.bolt_h}}, \frac{\tau_{post.bolt_h}}{F_{v.bolt_h}}\right) \qquad IR_{post.bolt} = \begin{pmatrix} 0.20 \\ 0.13 \end{pmatrix}$$

The seal strip plates have to transfer the loads from the weld to the bolts. Therefore, the eccentricity between these components result in a bending stress on the seal strip. The eccentricity between the bolt and the edge of the tube steel post is:

$$e_{post} := \frac{\sqrt{w_{hex.x}^2 + w_{hex.z}^2} - 3 \cdot in - 2 \cdot t_w}{2} \qquad e_{post} = 0.61\ in$$

The seal strip bending will be based on the maximum bolt tension from either the top or the bottom post bolts. The seal strip bending moment is:

$M_{strip_h} := T_{post.bolt_h} \cdot e_{post}$ $\qquad M_{strip} = \begin{pmatrix} 620 \\ 649 \end{pmatrix} in \cdot lbf$

The effective width of the seal strip plate is taken as the 1/2 the width of the plate across at a 45 degree angle to match the orientation of the tube steel post. Therefore the section modulus is:

$S_{strip} := \frac{1}{6} \cdot \left(\frac{w_{strip}}{2} \cdot \sqrt{2} \right) \cdot t_{strip}^2$ $\qquad S_{strip} = 0.0994\, in^3$

$\sigma_{strip} := \frac{M_{strip}}{S_{strip}}$ $\qquad \sigma_{strip} = \begin{pmatrix} 6.24 \\ 6.53 \end{pmatrix} ksi$

$IR_{strip} := \frac{\sigma_{strip}}{\begin{pmatrix} 0.75 \cdot S_{ya} \\ 0.9 \cdot S_{ya} \end{pmatrix}}$ $\qquad IR_{strip} = \begin{pmatrix} 0.33 \\ 0.28 \end{pmatrix}$

6.6.4 Plenum Box Splice Connections

The plenum box channel is broken into several sections. 1/4" plates and/or angles are used to splice the channel sections back together at the straight sections and corners respectively. The splice plates/angles are welded on one side with a 1/8" stitch weld (1" @ 4") and bolted with three 1/2" bolts on the other side, per Reference [6w] and [6k].

The plenum box channel splice connections are primarily subjected to differential pressure and thermal expansion loads. The connections are qualified for the maximum loads in the channels. These loads are summarized in Section 6.3.4 and repeated below.

$F_{x.chan} = \begin{pmatrix} 255 \\ 450 \end{pmatrix} lbf$ $\qquad F_{z.chan} = \begin{pmatrix} 365 \\ 45 \end{pmatrix} lbf$

$M_{x.chan} = \begin{pmatrix} 1325 \\ 2235 \end{pmatrix} in \cdot lbf$ $\qquad M_{z.chan} = \begin{pmatrix} 6420 \\ 10860 \end{pmatrix} in \cdot lbf$

The connection is composed of either plate sections, or angle sections (at the corners) with three bolts per section. The shear and tension in the bolts is calculated below. The tension loads include the effect of prying action

$$V_{splice.bolt} := \frac{F_{x.chan}}{3} + \frac{M_{z.chan}}{6 \cdot in} \qquad V_{splice.bolt} = \begin{pmatrix} 1155 \\ 1960 \end{pmatrix} lbf$$

$$T_{splice.bolt} := \left(\frac{F_{z.chan}}{3} + \frac{M_{x.chan}}{6 \cdot in}\right) \cdot \frac{3 \cdot in}{1.5 \cdot in} \qquad T_{splice.bolt} = \begin{pmatrix} 685 \\ 775 \end{pmatrix} lbf$$

The bolt stresses are:

$$\tau_{splice.bolt} := \frac{V_{splice.bolt}}{A_{bolt}} \qquad \tau_{splice.bolt} = \begin{pmatrix} 5.88 \\ 9.98 \end{pmatrix} ksi$$

$$\sigma_{splice.bolt} := \frac{T_{splice.bolt}}{A_{bolt}} \qquad \sigma_{splice.bolt} = \begin{pmatrix} 3.49 \\ 3.95 \end{pmatrix} ksi$$

$$F_{t.splice.bolt} := 1.25 \cdot F_{t.bolt} \cdot \beta 2 - 2.4 \cdot \tau_{splice.bolt} \qquad F_t = \begin{pmatrix} 26.21 \\ 44.25 \end{pmatrix} ksi$$

$$F_{t.splice.bolt_h} := \min\left(F_{t.bolt_h}, F_{t_h}\right) \qquad F_{t.bolt} = \begin{pmatrix} 26.21 \\ 44.25 \end{pmatrix} ksi$$

$$IR_{splice.bolt_h} := \max\left(\frac{\sigma_{splice.bolt_h}}{F_{t.splice.bolt_h}}, \frac{\tau_{splice.bolt_h}}{F_{v.bolt_h}}\right) \qquad IR_{splice.bolt} = \begin{pmatrix} 0.31 \\ 0.36 \end{pmatrix}$$

Shear stresses on the splice plate are as follows:

$$\tau_{splice.pl} := \frac{M_{x.chan} \cdot (0.25 \cdot in)}{\frac{1}{3} \cdot 12 \cdot in \cdot (0.25 \cdot in)^3} \qquad \tau_{splice.pl} = \begin{pmatrix} 5.30 \\ 8.94 \end{pmatrix} ksi$$

$$IR_{splice.pl} := \frac{\tau_{splice.pl}}{\begin{pmatrix} 0.4 \cdot S_{yo} \\ 0.5 \cdot S_{yo} \end{pmatrix}} \qquad IR_{splice.pl} = \begin{pmatrix} 0.47 \\ 0.64 \end{pmatrix}$$

The stresses in the 1/8" stitch welds are evaluated below:

The geometry and properties of the weld are calculated below:

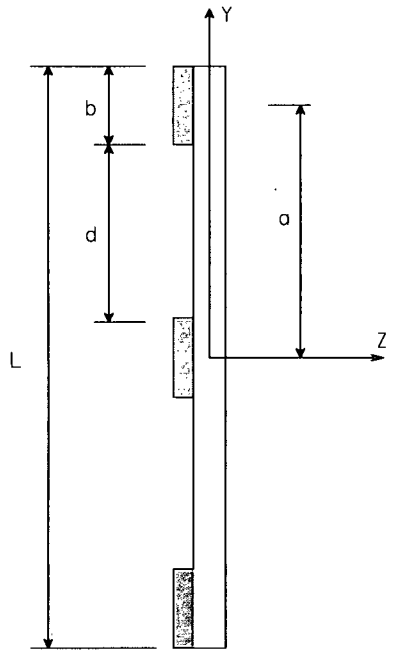

$a := 4 \cdot in$ $\qquad b := 1 \cdot in$

$d := a - b$ $\qquad d = 3.00\,in$

$L := 2 \cdot a + b$ $\qquad L = 9.00\,in$

$t_w := .125in$

$e_{pl} := 4.5 \cdot in$ (eccentricity from bolt group to weld)

$A_w := 3 \cdot b$ $\qquad A_w = 3.00\,in$

$I_{wz} := \frac{b^3}{3} + 2 \cdot a^2 \cdot b$ $\qquad I_{wz} = 32.33\,in^3$ (Ref. [13])

$S_{wz} := \frac{2 \cdot I_{wz}}{L}$ $\qquad S_{wz} = 7.19\,in^2$

$e_w := \frac{t_w}{\sqrt{2}}$ $\qquad e_w = 0.088\,in$

The stresses in the weld treated as a line are:

$f_{x.w} := \frac{F_{x.chan}}{A_w} + \frac{M_{z.chan}}{S_{wz}}$ $\qquad f_{x.w} = \begin{pmatrix} 979 \\ 1661 \end{pmatrix} \frac{lbf}{in}$

$f_{y.w} := 0 \cdot \frac{lbf}{in}$ $\qquad f_{y.w} = 0 \frac{lbf}{in}$

$f_{z.w} := \frac{F_{z.chan}}{A_w}$ $\qquad f_{z.w} = \begin{pmatrix} 122 \\ 15 \end{pmatrix} \frac{lbf}{in}$

$f_{r.w} := \overrightarrow{\sqrt{f_{x.w}^2 + f_{y.w}^2 + f_{z.w}^2}}$ $\qquad f_{r.w} = \begin{pmatrix} 986 \\ 1662 \end{pmatrix} \frac{lbf}{in}$

The Allowable Stress in the weld is per AISC (Reference [9]). Note that the tensile strength for the stainless steel weld electrodes (ER308 or ER308L) is 75 ksi per Reference [19].

$S_{uw} = 75.00\ \text{ksi}$

$F_w := .3 \cdot S_{uw} \cdot e_w$ $\qquad F_w = 1989 \frac{\text{lbf}}{\text{in}}$ (effective throat)

$F_{w.bm} := 0.4 \cdot S_{ya} \cdot t_w$ $\qquad F_{w.bm} = 1275 \frac{\text{lbf}}{\text{in}}$ (base metal shear)

$F_w := \min(F_w, F_{w.bm})$

$F_{w1.8} := \begin{bmatrix} F_w \\ (1 + CT_2) \cdot F_w \end{bmatrix}$ $\qquad F_{w1.8} = \begin{pmatrix} 1275 \\ 1912 \end{pmatrix} \frac{\text{lbf}}{\text{in}}$

The Interaction Ratio of the weld for the channel splice connection is:

$IR_{w.splice_h} := \frac{f_{r.w_h}}{F_{w1.8_h}}$ $\qquad IR_{w.splice} = \begin{pmatrix} 0.77 \\ 0.87 \end{pmatrix}$ (Note the plate itself is OK by comparison)

Connections at Curb Section

At the curb section, a 3-piece section is welded together to match the outline of the curb per Reference [6ab]. This section is welded together as fixed connections at the two corners. This welded section is then bolted to the main plenum box section using clip angle type connections. The loads on these corners are summarized in Section 6.4.4. and repeated below:

$F_{x.curb} = \begin{pmatrix} 355 \\ 15 \end{pmatrix}$ lbf $\qquad M_{x.curb} = \begin{pmatrix} 1325 \\ 2235 \end{pmatrix}$ in·lbf

$F_{y.curb} = \begin{pmatrix} 0 \\ 0 \end{pmatrix}$ $\qquad M_{y.curb} = \begin{pmatrix} 1940 \\ 155 \end{pmatrix}$ in·lbf

$F_{z.curb} = \begin{pmatrix} 285 \\ 20 \end{pmatrix}$ lbf $\qquad M_{z.curb} = \begin{pmatrix} 55 \\ 90 \end{pmatrix}$ in·lbf

The weld at the corner connections of the curb section are three sided welds on the inside of the channel

The overall dimensions of the channel are:

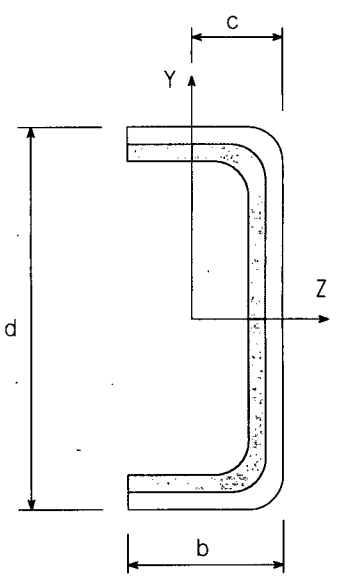

$d := 12in \qquad b := 3in$

$t_w := .125in$

$A_w := 2(b + d - .858 \cdot 2 \cdot t_w) \qquad A_w = 29.57\,in$

$C_y := \frac{d}{2} \qquad C_y = 6.00\,in$

$C_z := \frac{b^2}{2 \cdot b + d} \qquad C_z = 0.50\,in$

$S_{wz} := d \cdot \left(b + \frac{d}{6}\right) \qquad S_{wz} = 60.00\,in^2$

(Ref. [13])

$S_{wy} := \frac{b^2}{3} \cdot \left(\frac{b + 2 \cdot d}{b + d}\right) \qquad S_{wy} = 5.40\,in^2$

$J_w := S_{wy} \cdot C_z + S_{wz} \cdot C_y \qquad J_w = 362.70\,in^3$

The stresses in the weld treated as a line are:

$$f_{x.w} := \frac{F_{x.curb}}{A_w} + \frac{M_{z.curb}}{S_{wz}} + \frac{M_{y.curb}}{S_{wy}} \qquad f_{x.w} = \begin{pmatrix} 372 \\ 31 \end{pmatrix} \frac{lbf}{in}$$

$$f_{y.w} := \frac{F_{y.curb}}{A_w} + \frac{M_{x.curb} \cdot C_z}{J_w} \qquad f_{y.w} = \begin{pmatrix} 2 \\ 3 \end{pmatrix} \frac{lbf}{in}$$

$$f_{z.w} := \frac{F_{z.curb}}{A_w} + \frac{M_{x.curb} \cdot C_y}{J_w} \qquad f_{z.w} = \begin{pmatrix} 32 \\ 38 \end{pmatrix} \frac{lbf}{in}$$

$$f_{r.w} := \sqrt{f_{x.w}^2 + f_{y.w}^2 + f_{z.w}^2} \qquad f_{r.w} = \begin{pmatrix} 374 \\ 49 \end{pmatrix} \frac{lbf}{in}$$

The allowable stress is the same as was previously defined

The Interaction Ratio of the weld for the channel to channel section at the curb is:

$$IR_{w.curb_h} := \frac{f_{r.w_h}}{F_{w1.8_h}} \qquad IR_{w.curb} = \begin{pmatrix} 0.29 \\ 0.03 \end{pmatrix}$$

6.6.5 Plate Beam Spanning Over Pit Connections

There is a plate beam spanning over the opening in the sump pit which carries the load to adjacent tube steel posts. This beam is connected to a plate using two 1/2" bolts. The plate is in turn welded to the adjacent tube steel posts. The beam is modeled as a pinned-pinned beam, thus this connection only needs to transfer the shear loads.

$$V_{beam.bolt} := \frac{\sqrt{F_{x.beam}^2 + F_{y.beam}^2}}{2} \qquad V_{beam.bolt} = \begin{pmatrix} 1479 \\ 2301 \end{pmatrix} lbf$$

The bolt stresses are:

$$f_v := \frac{V_{beam.bolt}}{A_{bolt}} \qquad f_v = \begin{pmatrix} 7.53 \\ 11.72 \end{pmatrix} ksi$$

$$F_{v.bolt} = \begin{pmatrix} 18.73 \\ 28.10 \end{pmatrix} ksi$$

$$IR_{beam.bolt} := \frac{f_v}{F_{v.bolt}} \qquad IR_{beam.bolt} = \begin{pmatrix} 0.40 \\ 0.42 \end{pmatrix}$$

The plate is welded to the adjacent tube steel posts with a double sided stitch weld (2" @ 6" centers). The plate itself is qualified by comparison to the weld which is the weak link. The weld is qualified below.

The geometry and properties of the weld are calculated below:

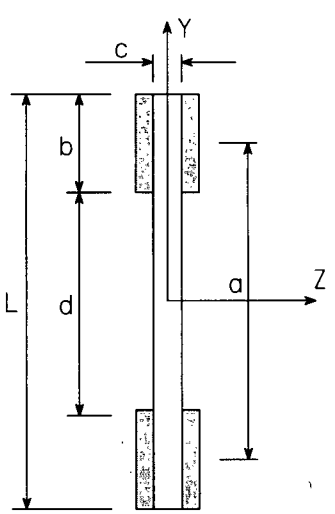

$a := 6 \cdot in$

$b := 2 \cdot in$

$c := 0.25 \cdot in$

$d := a - b \qquad d = 4.00\,in$

$L := a + b \qquad L = 8.00\,in$

$t_w := .1875 in$

$e_{pl} := 2 \cdot in$ (eccentricity from bolt group to weld)

$A_w := 4 \cdot b$ $\qquad A_w = 8.00\,in$

$S_{wy} := 4 \cdot b \cdot c$ $\qquad S_{wy} = 2.00\,in^2$

$S_{wz} := \frac{2 \cdot (L^3 - d^3)}{6 \cdot L}$ $\qquad S_{wz} = 18.67\,in^2$ (Ref. [13])

$e_w := \frac{t_w}{\sqrt{2}}$ $\qquad e_w = 0.133\,in$

The stresses in the weld treated as a line are:

$f_{x.w} := \frac{F_{x.beam}}{A_w} + \frac{F_{y.beam} \cdot e_{pl}}{S_{wz}}$ $\qquad f_{x.w} = \begin{pmatrix} 468 \\ 642 \end{pmatrix} \frac{lbf}{in}$

$f_{y.w} := \frac{F_{y.post}}{A_w}$ $\qquad f_{y.w} = \begin{pmatrix} 171 \\ 261 \end{pmatrix} \frac{lbf}{in}$

$f_{z.w} := 0 \cdot in$ $\qquad f_{z.w} = 0 \frac{lbf}{in}$

$f_{r.w} := \overrightarrow{\sqrt{f_{x.w}^2 + f_{y.w}^2 + f_{z.w}^2}}$ $\qquad f_{r.w} = \begin{pmatrix} 498 \\ 693 \end{pmatrix} \frac{lbf}{in}$

The Interaction Ratio of the weld for the beam connection to the tube steel post is:

$IR_{w.beam_h} := \frac{f_{r.w_h}}{F_{w3.16_h}}$ $\qquad IR_{w.beam} = \begin{pmatrix} 0.26 \\ 0.24 \end{pmatrix}$

A 3/8" x 6" x 6" Connector Plate is welded to the top of the Plate Beam, at its midspan. A stiffener plate is provided each side of the Plate Beam to support the Connector Plate. The Connector plate is checked for plate bending due to maximum tension or compression load from the Hex couple and Top Plate. Consider 1/2 the load to be carried in each direction as a cantilever from the bolt location to the stiffener location.

$$S_{pb.plate} := \frac{\frac{3 \cdot in}{0.707} \cdot (0.375 \cdot in)^2}{6} \qquad S_{pb.plate} = 0.10\,in^3$$

$$\sigma_{pb.plate} := \frac{\frac{F_{x.hex}}{2} \cdot \frac{w_{hex.x}}{2}}{S_{pb.plate}} \qquad \sigma_{pb.plate} = \begin{pmatrix} 10.33 \\ 16.63 \end{pmatrix} ksi$$

$$IR_{conn.pl} := \frac{\sigma_{pb.plate}}{\begin{pmatrix} 0.75 \cdot S_{ya} \\ 0.90 \cdot S_{ya} \end{pmatrix}} \qquad IR_{conn.pl} = \begin{pmatrix} 0.54 \\ 0.72 \end{pmatrix}$$

The fillet weld between the Connector Plate, Stiffeners and Plate Beam are adequate as seen by the long total length of the welds. The Stiffener plates are also adequate as seen by the low downward loads from the hex couple.

6.6.6 Miscellaneous Unique Connections

Unique Seal Strip Details

Unique details are used at certain locations due to the interference of the sump pit opening. For the top seal strips, the details are unique at the two locations where the strainer modules are supported by the plate beams as opposed to the tube steel posts. In these locations, the strainer mounting bolts are connected directly to the strainer support plate as shown on Drawing PA-7155 (Reference [6y]). Therefore, the seal strip is not loaded at this location. For the bottom seal strip, the Seal Strip at L5 as shown on Drawing PA-7157 (Reference [6aa]) is not connected to any tube steel posts. This seal strip is not loaded and is simply bolted to the lower deck plates to seal the seam between lower deck plates.

Weld of Plenum Box Channel to Spacer Plate

The plenum box channel is welded to a spacer plate that sits on top of the curb. This is shown on Detail 4 of the PA-7158 drawing (Reference [6ab]). The weld is a fillet weld on one side of the channel (3/16" 1 @ 4) and a flare bevel groove weld on the other side (1/8" 1 @ 4). These welds are qualified by comparison to the clip welds which control. These welds are only subjected to straight uplift loads as there are no moments that they are required to carry.

Lower Deck Plate at Tapered Support Beams

There are a few unique details where the lower deck is connected to floor beams that are tapered on the ends due to the interference with the sump pit. Most of these details do not result in any special situations that require specific evaluation. However for Lower Deck Plate No. LD-H as identified on Drawing PA-7151 (Reference [6u]), the lower deck plate is subjected to unique loads. At this location because the support beam is not continuous, one of the bolts that supports the tube steel post needs to be connected directly to the lower deck plate (as opposed to the floor beam itself). Therefore the lower deck has to transfer any uplift loads in this bolt to the support beam. Considering the lower deck to act as a cantilever beam spanning to the adjacent bolt which is attached to the support beam (conservatively neglecting the support provided by the deck clips), the local bending stress in the lower deck in this location would be:

$$T_{TS4} := \frac{3160 \cdot lbf - 2 \cdot (1290 \cdot lbf)}{4} + \frac{1925 \cdot in \cdot lbf}{w_{hex.x} \cdot \sqrt{2}}$$

$T_{TS4} = 564\ lbf$ Maximum tension per bolt at Member TS4, Joint BP16 (loads from Attachment B)

The moment arm is the distance between bolts

$M_{ldl} := T_{TS4} \cdot w_{hex.x}$ $M_{ldl} = 1832\ in \cdot lbf$

The effective width of the lower deck plate is estimated at 6", therefore, the section modulus is

$S_{ldl} := \frac{1}{6} \cdot 6 \cdot in \cdot t_{ldp}^2$ $S_{ldl} = 0.25\ in^3$

$\sigma_{ldl} := \frac{M_{ldl}}{S_{ldl}}$ $\sigma_{ldl} = 7.33\ ksi$

$IR_{ldl} := \frac{\sigma_{ldl}}{0.75 \cdot S_{yo}}$ $IR_{ldl} = 0.35$

Note the high tension loads come from the seismic load cases, therefore this local bending stress does not need to be combined with the pressure stress in the lower deck plates.

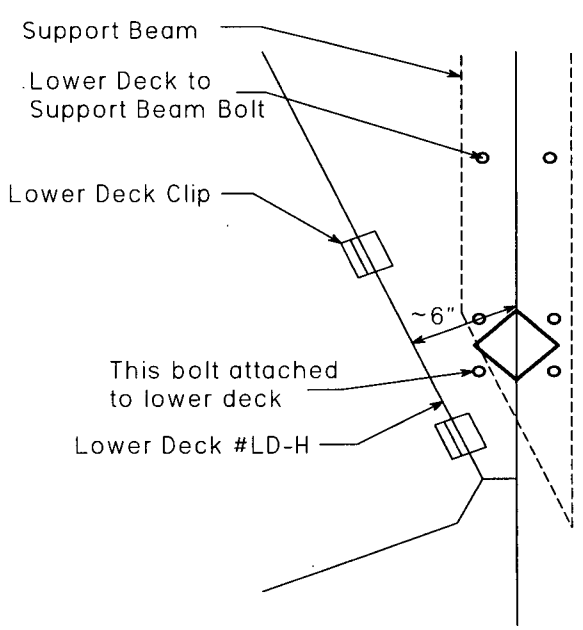

Figure 6.6-2 Lower Deck Plate LD-H

Extra Support Beam Section at Sump Pit

Support Beam SB-E as shown on Drawing PA-7150 (Reference [6t]) is tapered at one end to clear the sump curb. As a result, the beam is unable to support the plenum channel at the normal location. Therefore an extra section of W6x15 floor beam is used adjacent to this section to provide a support point for the channel, and to provide bottom flange space for the expansion anchors. The W6x15 section is welded to the side of the normal support beam using groove welds on both the top and bottom flanges. This "jog" over of the beam is not specifically modeled in the GTSTRUDL analysis. The detail is not expected to give rise to any significant stress concerns, therefore the effect of the beam offset is considered to have negligible impact on the model. A 6" offset will result on the plenum channel from the location where the strainer bolts are attached, to where the channel is supported by the support beam. The other side of the sump pit has a similar offset of about 15" from the strainer support location to the support point on the curb. This offset is considered in the GTSTRUDL model and the plenum channel member is acceptable. Since this 6" offset is less than the modeled cantilever offset on the other side of the sump pit, this offset is considered acceptable by comparison. All other aspects of this unique connection are considered acceptable.

Miscellaneous Cover Plates

Several miscellaneous cover plates are used to cover and seal holes in the plenum for penetrating pipes, and/or to cover the manway access section outside the plenum boundary. These plates and their corresponding bolting are acceptable based on the low magnitude of the loads and the small sizes of the openings. The biggest of the pipe penetrations is only a 6 5/8" opening for a 4 1/2" OD pipe. The force on this cover plate due to pressure is:

$$F_{open} := DP \cdot \frac{\pi}{4} \cdot \left[(6.625 \cdot in)^2 - (4.5 \cdot in)^2\right] \qquad F_{open} = 28\ lbf$$

The capacity of the 11 gage plate and the supporting bolting is more than sufficient to resist these small pressure loads.

As for the manway access cover, the top cover plates and lower deck plates, which are the same thickness, are evaluated in the GTSTRUDL model for pressure loads across a 32" span. The section of cover plate that extends out beyond the plenum boundary has a 36" span which is slightly greater. However this section of the cover plate is supported along three edges at the corner of the opening. Therefore due to the extra support, the lower deck plate spanning 32" supported on only two sides is more critical than the section outside the plenum which has a 36" span but is supported on three sides.

6.7 Anchorage Evaluation

The entire substructure assembly is anchored to the floor using Hilti Kwik-Bolt 3 expansion anchors. In addition, the plenum box channels that surround the sump pit opening are welded to the embedded angle in the curb around the pit. The anchorage to the building is evaluated in this section.

6.7.1 Support Beam Expansion Anchors

The support beams are anchored to the floor on each end using Hilti Kwik-Bolt III expansion anchors. These anchor points are modeled in GTSTRUDL at each bolt location. The reaction loads are summarized in Section 6.4.3. The tension and shear loads on the expansion anchors are evaluated in accordance with TVA Design Standard DS-C1.7.1 (Reference [5]).

Based on Section 5.1.1B of Reference [5], the moment arm for determining the bolt tension due to the Mz moment is conservatively calculated as:

$L_z := 2 \cdot t_{fb} + t_{wb} + 2 \cdot in$ $\qquad L_z = 2.75\,in$

Note that since the anchors are installed in a finished slab with no rebar interferences, additional considerations to allow for construction relocation tolerances is not required. The holes will be pre-drilled in the support beams, therefore it can be assured that the bolts will be installed very near their design location. Note that 1/4" shim plates were added as a last minute design change under the floor beams. The effect of adding these shim plates is considered insignificant and will not impact the results of the expansion anchor qualification. The length of these shim plate is the same length as considered for the effective flange width of the floor beams, therefore the assumed flange bending behavior is not affected.

The maximum bolt tension is calculated for each bolt of the bolt pair in accordance with Section 5.1.1C of Reference [5] as follows:

$$T_{bolt} := \overrightarrow{\left[\frac{0.7 \cdot 2}{N_{bolt}} \cdot (RY) + \frac{2 \cdot MZ}{N_{bolt} \cdot L_z}\right]}$$

$$T_{bolt} = \begin{pmatrix} 764 \\ 1006 \\ 1346 \\ 378 \\ 717 \\ 7 \\ 1680 \\ 1090 \\ 883 \end{pmatrix} lbf$$

Type 1E - WA28
Type 2I - WA31
Type 3E - WA5
Type 3I - WA12
Type 4E - WA33
Type 4I - WA24
Type 5E - WA9
Type 6E - WA7
Type 6I - WA20

The 0.7 factor shown above is used to account for prying for a two bolt baseplate in accordance with Section 5.1.1C of Reference [5].

The maximum bolt shear is calculated as follows

$$V_{bolt} := \overrightarrow{\frac{\sqrt{RX^2 + RZ^2}}{N_{bolt}}}$$

$$V_{bolt} = \begin{pmatrix} 106 \\ 453 \\ 0 \\ 0 \\ 862 \\ 978 \\ 485 \\ 393 \\ 434 \end{pmatrix} lbf$$

Type 1E - WA28
Type 2I - WA31
Type 3E - WA5
Type 3I - WA12
Type 4E - WA33
Type 4I - WA24
Type 5E - WA9
Type 6E - WA7
Type 6I - WA20

The anchor bolts are 1/2" Hilti Kwik Bolt III with a minimum embedment of 3 1/4". Bolt allowables are taken from Table 8 of Reference [5]

$T_{all} := 2100 \cdot lbf$ $\qquad$ $V_{all} := 2000 \cdot lbf$

The expansion anchor shear / tension interaction formula is taken from Equation 8 of Reference [5]. Looking at the maximum loads on a single anchor (regardless of spacing), the interaction ratio is:

$$IR_{cea} := \overrightarrow{\left[\left(\frac{T_{bolt}}{T_{all}}\right)^{1.7} + \left(\frac{1.5 \cdot V_{bolt}}{1.5 \cdot V_{all}}\right)^{1.7}\right]^{\left(\frac{1}{1.7}\right)}}$$

$$IR_{cea} := \max(IR_{cea})$$

$$IR_{cea} = 0.86$$

$$IR_{cea} = \begin{pmatrix} 0.37 \\ 0.55 \\ 0.64 \\ 0.18 \\ 0.58 \\ 0.49 \\ 0.86 \\ 0.58 \\ 0.50 \end{pmatrix}$$

Type 1E - WA28
Type 2I - WA31
Type 3E - WA5
Type 3I - WA12
Type 4E - WA33
Type 4I - WA24
Type 5E - WA9
Type 6E - WA7
Type 6I - WA20

Note the Interaction Ratio is calculated by raising the interaction equation to the power of 1 / 1.7. This will give an accurate representation of the margin remaining before failure. Without raising to the power of 1 / 1.7, the Interaction Ratio would be unconservatively misleading.

The minimum spacing required for the 1/2" wedge type expansion anchors is 6". The spacing between adjacent bolts on a given support beam is only 4". Other anchors are spaced 6" away and some anchor could have a free edge as close as 3" away. Evaluate the concrete strength for the reduced shear cone considering the overlap from two adjacent anchors and the nearby edge in accordance with Reference [5].

$S_{cea} := \begin{pmatrix} 4 \\ 6 \end{pmatrix} \cdot in$ Minimum anchor spacing per Reference [6z]

$E := 3.25 \cdot in$ Bolt Embedment (Reference [6z])

The shear cone angle is taken from 7.1.1A of Ref. [5]

$\theta := 124 \cdot deg - 6.8 \cdot \frac{deg}{in} \cdot E$ $\theta = 101.9\, deg$

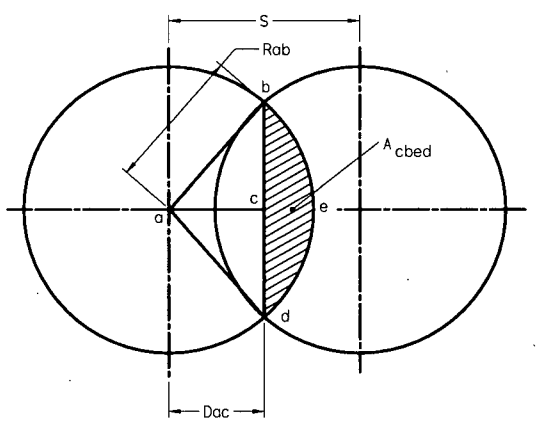

$R_{ab} := E \cdot \tan\left(\frac{\theta}{2}\right)$ $R_{ab} = 4.01\, in$

$D_{ac} := \frac{S_{cea}}{2}$ $D_{ac} = \begin{pmatrix} 2.00 \\ 3.00 \end{pmatrix} in$

$\theta_{bad} := 2 \cdot acos\left(\frac{D_{ac}}{R_{ab}}\right)$ $\theta_{bad} = \begin{pmatrix} 120.1 \\ 83.0 \end{pmatrix} deg$

$A_{full} := \pi \cdot R_{ab}^2$ $A_{full} = 50.42\, in^2$

$A_{abed} := A_{full} \cdot \frac{\theta_{bad}}{2 \cdot \pi}$ $A_{abed} = \begin{pmatrix} 16.82 \\ 11.63 \end{pmatrix} in^2$

$A_{abcd} := \overrightarrow{\left(\frac{1}{2} \cdot D_{ac} \cdot 2 \cdot R_{ab} \cdot \sin\left(\frac{\theta_{bad}}{2}\right)\right)}$ $A_{abcd} = \begin{pmatrix} 6.94 \\ 7.97 \end{pmatrix} in^2$

$A_{cbed} := A_{abed} - A_{abcd}$ $A_{cbed} = \begin{pmatrix} 9.88 \\ 3.66 \end{pmatrix} in^2$

The reduced area for a single bolt is taken as the full shear cone area, less the area of segment "cbed" for a 4" anchor spacing, less two times the area of segment "cbed" for a 6" spacing. This accounts for the adjacent spacing and edge distance violations. One bolt is spaced 4" away, another bolt is spaced 6" away, and there is a potential for a free edge at the expansion joint at the curb of 3" away (1/2 of the 6" spacing)

$A_{red} := A_{full} - A_{cbed_1} - 2 \cdot A_{cbed_2}$ $\qquad A_{red} = 33.22\ in^2$

The ultimate concrete strength for the reduced shear cone area is taken from 7.1.1C of Reference [5]

$P_{ult} := 6.0 \cdot \sqrt{3000} \cdot \frac{lbf}{in^2} \cdot A_{red}$ $\qquad P_{ult} = 10917\ lbf \quad > \quad T_{all} = 2100\ lbf$

The ultimate concrete shear strength for the reduced shear cone area is taken from 8.2.1 of Reference [5]

$V_{ult} := 3.4 \cdot \sqrt{3000} \cdot \frac{lbf}{in^2} \cdot A_{red}$ $\qquad V_{ult} = 6186\ lbf$

Using a factor of safety of 4, the allowable concrete Shear load at an Edge Distance of 3" is

$V_{all.ED} := \frac{V_{ult}}{4}$ $\qquad V_{all.ED} = 1547\ lbf \quad < \quad V_{all} = 2000\ lbf$

Therefore, bolts do not need to be de-rated for spacing, but do need adjustment for edge distance.

Edge Distance to Expansion Joints

There are wedge type anchors within close proximity to the expansion joint around the sump curb at support points WA28, WA16 and WA7. This expansion joint will be treated as a free edge. The closest anchors are spaced at 3" from this expansion joint (the beams are cut back 2" from the outside of the curb, and the bolts have a minimum 1" edge distance from the end of the beam). Per Reference [5], Section 8.1.2, a minimum of 6 bolt diameters is required for tension pullout and tension pullout capacity is not reduced for this concrete edge distance. The shear capacity is conservatively reduced for this edge distance per Section 8.2.1, as calculated above. The reduction is included by the following factor increase in shear load to bolts in WA28 and WA7, noting that WA16 has no shear.

$K_{hkb.shear} := \frac{V_{all}}{V_{all.ED}}$ $\qquad K_{hkb.shear} = 1.29$

6.7.2 Support Beam Local Flange at Anchor Bolts

The support beams act as flexible base plates local to the anchor bolts. The flange of the beam is evaluated for localized bending stress from the governing CEA tension load. The effective width of the flange is determined in Section 6.3.4. The maximum individual bolt tension loads are recalculated without prying action as prying will not result in increased local bending of the flange.

$$T_{bolt2} := \overrightarrow{\left(\frac{RY}{N_{bolt}} + \frac{2 \cdot MZ}{N_{bolt} \cdot L_z}\right)}$$

$$T_{bolt2} = \begin{pmatrix} 610 \\ 1006 \\ 963 \\ 309 \\ 517 \\ 7 \\ 1520 \\ 980 \\ 883 \end{pmatrix} lbf$$

Type 1E - WA28
Type 2I - WA31
Type 3E - WA5
Type 3I - WA12
Type 4E - WA33
Type 4I - WA24
Type 5E - WA9
Type 6E - WA7
Type 6I - WA20

Effective section modulus of the flange

$$S_{flg} := \overrightarrow{\frac{b_{f.eff} \cdot (0.26 \cdot in)^2}{6}}$$

$$S_{flg} = \begin{pmatrix} 0.1014 \\ 0.2028 \\ 0.1014 \\ 0.1352 \\ 0.1014 \\ 0.1352 \\ 0.1014 \\ 0.1690 \\ 0.2028 \end{pmatrix} in^3$$

$$\sigma_{b.flg} := \frac{T_{bolt2} \cdot 1.625 \cdot in}{S_{flg}} \qquad \sigma_{b.flg} = \begin{pmatrix} 9.77 \\ 8.06 \\ 15.43 \\ 3.71 \\ 8.29 \\ 0.09 \\ 24.36 \\ 9.42 \\ 7.07 \end{pmatrix} ksi$$

The critical Interaction Ratio for Load Combination 4 (DW+SSE+TOL)

$$IR_{beam.flg} := \frac{\sigma_{b.flg}}{0.90 \cdot S_{yo}} \qquad IR_{beam.flg} = \begin{pmatrix} 0.39 \\ 0.32 \\ 0.61 \\ 0.15 \\ 0.33 \\ 0.00 \\ 0.97 \\ 0.37 \\ 0.28 \end{pmatrix}$$

Type 1E - WA28
Type 2I - WA31
Type 3E - WA5
Type 3I - WA12
Type 4E - WA33
Type 4I - WA24
Type 5E - WA9
Type 6E - WA7
Type 6I - WA20

$IR_{beam.flg.max} := \max(IR_{beam.flg})$ $\qquad IR_{beam.flg.max} = 0.97 < 1.0$ O.K. (Load Comb #4)

See Attachment D for the interaction ratios for other load combinations.

Note the overall capacity of the plenum support beam flanges to resist SSE loads may be approximated based on the average IR for type 1E, 2I, 5E, 6Eand 6I anchorages as follows:

$$IR_{beam.flg.avg} := \frac{IR_{beam.flg_1} + IR_{beam.flg_2} + IR_{beam.flg_7} + IR_{beam.flg_8} + IR_{beam.flg_9}}{5}$$

$IR_{beam.flg.avg} = 0.47$

6.7.3 Clip Connections at Sump Curb

The plenum box channels that sit on top of the curb are secured to the curb by clip angles as shown in the figure below. These clip angles allow lateral displacement for thermal, but hold down the channels from picking up off the curb resulting in a possible debris flow path.

The maximum uplift load on the clip angles is summarized in Section 6.4.4 and repeated here

$$R6_y = \begin{pmatrix} 425 \\ 758 \end{pmatrix} \text{lbf}$$

This evaluation also covers the clip angle connection that holds down the portions of the lower deck to the curb. Those plates are not included in the GTSTRUDL model, but the load is calculated below:

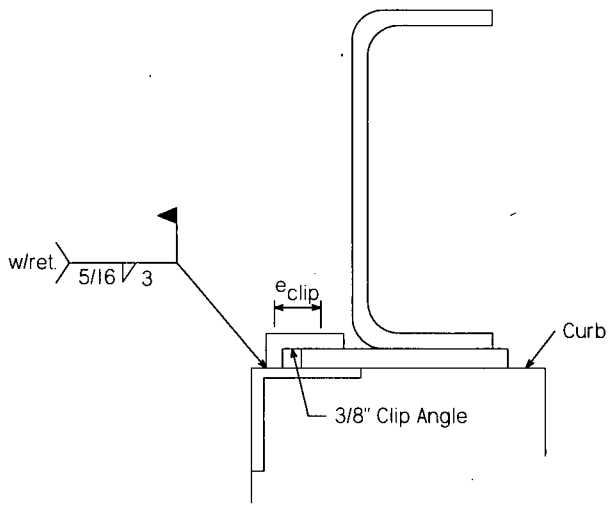

These partial lower deck plates are primarily subjected to pressure loads. The effective area held down by any one clip is estimated at:

$$A_{clip} := \frac{2W1 \cdot W2}{3 \cdot 2} \qquad A_{clip} = 341.3\ \text{in}^2$$

$$R7_y := A_{clip} \cdot DP \qquad R7_y = 518\ \text{lbf}$$

Therefore, the controlling uplift on the clip is:

$$F_{y.clip} := \begin{pmatrix} \max\left(R6_{y_1}, R7_y\right) \\ R6_{y_2} \end{pmatrix} \qquad F_{y.clip} = \begin{pmatrix} 518 \\ 758 \end{pmatrix} \text{lbf}$$

The critical component is the weld of the clip. Due to the small size of the weld, the full weld areas are calculated (i.e. not treated as a line)

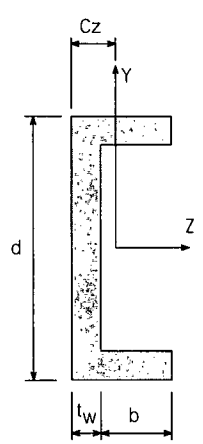

$$d := 3\text{in} \qquad b := 0.375\text{in}$$

$$t_w := 0.3125\text{in}$$

$$e_w := \frac{t_w}{\sqrt{2}} \qquad e_w = 0.221\ \text{in}$$

$$A_w := e_w \cdot (d + 2 \cdot b) \qquad A_w = 0.83\ \text{in}^2$$

$$C_z := \frac{\frac{d \cdot e_w^2}{2} + 2 \cdot b \cdot e_w \cdot \left(e_w + \frac{b}{2}\right)}{A_w} \qquad C_z = 0.17\,in$$

$$I_{wy} := \frac{1}{12} \cdot d \cdot e_w^3 + \frac{2}{12} \cdot e_w \cdot b^3 + d \cdot e_w \cdot \left(C_z - \frac{e_w}{2}\right)^2 + 2 \cdot b \cdot e_w \cdot \left(C_z - t_w - \frac{b}{2}\right)^2 \qquad I_{wy} = 0.0250\,in^4$$

$$S_{wy} := \frac{I_{wy}}{b + t_w - C_z} \qquad S_{wy} = 0.0484\,in^3$$

The eccentricity of the clip is:

$$e_{clip} := 0.75 \cdot in + 0.375 \cdot in + t_w - C_z \qquad e_{clip} = 1.27\,in$$

Therefore, the moment on the clip is

$$M_{y.clip} := F_{y.clip} \cdot e_{clip} \qquad M_{y.clip} = \begin{pmatrix} 656 \\ 960 \end{pmatrix} in \cdot lbf$$

The stresses in the weld is:

$$f_{x.w} := \frac{F_{y.clip}}{A_w} + \frac{M_{y.clip}}{S_{wy}} \qquad f_{x.w} = \begin{pmatrix} 14.19 \\ 20.76 \end{pmatrix} ksi$$

The allowable weld stress is

$$F_{w2} := \begin{pmatrix} 0.3 \cdot S_{uw} \\ \frac{0.9}{0.4 \cdot \sqrt{3}} \cdot 0.3 \cdot S_{uw} \end{pmatrix} \qquad F_{w2} = \begin{pmatrix} 22.50 \\ 29.23 \end{pmatrix} ksi$$

The Interaction Ratio of the weld for the clip to existing angle at the curb is:

$$IR_{w.clip_h} := \frac{f_{x.w_h}}{F_{w2_h}} \qquad IR_{w.clip} = \begin{pmatrix} 0.63 \\ 0.71 \end{pmatrix}$$

Note that the weld of the clip controls over the clip itself.

Check Embedded Angle and Studs

The embedded angle has a stud spacing of 12" per Reference [15], conservatively assuming the worst case of two clips being installed at mid span between two studs, and conservatively considering the embedded angle to act as a pinned-pinned beam between studs, the stress in the angle is:

$L_{ang} := 12 \cdot in$ $\qquad 2 \cdot F_{y.clip} = \begin{pmatrix} 1036 \\ 1515 \end{pmatrix} lbf$

$M_{ang} := \frac{2 \cdot F_{y.clip} \cdot L_{ang}}{4}$ $\qquad M_{ang} = \begin{pmatrix} 3108 \\ 4545 \end{pmatrix} in \cdot lbf$

The angle is a 3 x 3 x 1/4" angle. The section modulus for the angle is

$S_{ang} := 0.577 \cdot in^3$ $\qquad S_{ang} = 0.58\, in^3$ (Reference [9])

(due to the configuration of the angle and the direction of the load, it is acceptable to use the section modulus about the geometric axis as opposed to the principal axis)

The stress in the angle is

$\sigma_{ang} := \frac{M_{ang}}{S_{ang}}$ $\qquad \sigma_{ang} = \begin{pmatrix} 5.39 \\ 7.88 \end{pmatrix} ksi$

$IR_{ang} := \frac{\sigma_{ang}}{\begin{pmatrix} 0.6 \cdot S_{ya} \\ 0.9 \cdot S_{ya} \end{pmatrix}}$ $\qquad IR_{ang} = \begin{pmatrix} 0.35 \\ 0.34 \end{pmatrix}$

Note that the torsional loads will be resisted by bearing against the concrete. TVA will evaluate the effect on the concrete

To evaluate the embedded studs, conservatively assume the clip falls directly on top of one stud, therefore one stud has to take the entire load. Per Reference [15], the studs are 1/2" welded studs 5 3/16" long. These studs are acceptable in comparison to the weld of the clip. Per Reference [23], the ultimate strength of a 1/2" Nelson stud is 10.6 kips which is more than 7 times the actual load. Even if there is some reduction of capacity due to concrete edge distance with the sides of the curb, clearly the welding of the clip controls over the stud itself.

7.0 RESULTS AND CONCLUSIONS

The results of this calculation indicate that the strainers assemblies meet the acceptance criteria for all applicable loadings. A summary of the maximum stress Interaction Ratios (calculated stress divided by allowable stress) is provided below. See actual sections to determine which Load Combinations are applicable.

Strainer Component	Ref. Section	Interaction Ratio
Support Beams	6.4.1	$IR_{floor} = (0.06 \quad 0.09 \quad 0.07 \quad 0.07)$
Support Floor Beam Local Web	6.4.1	$IR_{web} = (0.55 \quad 0.94 \quad 0.66 \quad 0.73)$
Tube Steel Posts	6.4.1	$IR_{post} = (0.29 \quad 0.31 \quad 0.17 \quad 0.35)$
Top Cover Plate	6.4.1	$IR_{tcp} = (0.60 \quad 0.10 \quad 0.44 \quad 0.13)$
Lower Deck Plate	6.4.1	$IR_{plate} = (0.25 \quad 0.11 \quad 0.18 \quad 0.13)$
Plate Beam Over Pit	6.4.1	$IR_{beam} = (0.24 \quad 0.11 \quad 0.18 \quad 0.13)$
Hex Couplings	6.4.1	$IR_{hex} = (0.19 \quad 0.20 \quad 0.15 \quad 0.22)$
Plenum Box Channels	6.4.1	$IR_{chan} = (0.17 \quad 0.10 \quad 0.13 \quad 0.11)$
Plenum Box Channel Local Web	6.5.1	$IR_{chan.web} = 0.17$
Lower Deck Drainage Perforated Plate	6.5.2	$IR_{net} = 0.46$
Lower Deck Drainage Plate Openings	6.5.2	$IR_{lig} = 0.03$
Top Strip & Top Plates to Hex Couple Bolts	6.6.1	$IR_{strnr.bolt} = \begin{pmatrix} 0.48 \\ 0.37 \end{pmatrix}$
Channel to Support Beams Bolts	6.6.2	$IR_{chan.bolt} = \begin{pmatrix} 0.32 \\ 0.15 \\ 0.19 \end{pmatrix}$
Channel Local Flange at Bolts	6.6.2	$IR_{chan.flg} = \begin{pmatrix} 0.85 \\ 0.68 \\ 0.93 \end{pmatrix}$

Strainer Component	Ref. Section	Interaction Ratio
TS to Strip Plate (Top & Bottom) Weld	6.6.3	$IR_{w.post} = \begin{pmatrix} 0.27 \\ 0.24 \end{pmatrix}$
Bottom Strip & Bottom Plates to Beam Bolts	6.6.3	$IR_{post.bolt} = \begin{pmatrix} 0.20 \\ 0.13 \end{pmatrix}$
Strip Plate Local Stress at TS connection	6.6.3	$IR_{strip} = \begin{pmatrix} 0.33 \\ 0.28 \end{pmatrix}$
Channel Splice Plate Bolts	6.6.4	$IR_{splice.bolt} = \begin{pmatrix} 0.31 \\ 0.36 \end{pmatrix}$
Channel Splice Plate Welds	6.6.4	$IR_{w.splice} = \begin{pmatrix} 0.77 \\ 0.87 \end{pmatrix}$
Channel Splice Plate Shear	6.6.4	$IR_{splice.pl} = \begin{pmatrix} 0.47 \\ 0.64 \end{pmatrix}$
Channel to Channel Welds at Curb Corner	6.6.4	$IR_{w.curb} = \begin{pmatrix} 0.29 \\ 0.03 \end{pmatrix}$
Plate Beam to TS Bolts	6.6.5	$IR_{beam.bolt} = \begin{pmatrix} 0.40 \\ 0.42 \end{pmatrix}$
Plate Beam to TS Weld	6.6.5	$IR_{w.beam} = \begin{pmatrix} 0.26 \\ 0.24 \end{pmatrix}$
Plate Beam to Top Plate & Hex Connector Plate	6.6.5	$IR_{conn.pl} = \begin{pmatrix} 0.54 \\ 0.72 \end{pmatrix}$
Lower Deck Plate Local Stress	6.6.6	$IR_{ldl} = 0.35$
Concrete Expansion Anchors (HKBIII)	6.7.1	$IR_{cea} = 0.86$
Floor Beam Local Flange at Bolts	6.7.2	$IR_{beam.flg.max} = 0.97$ $IR_{beam.flg.avg} = 0.47$
Clip Angle to Sump Curb Weld	6.7.3	$IR_{w.clip} = \begin{pmatrix} 0.63 \\ 0.71 \end{pmatrix}$

8.0 REFERENCES

[1] TVA Design Specification SQN/WBN-DS-2005-063-001, "Advance Design Containment Building Sump Strainers", for Sequoyah Nuclear Plant Unit 1 & 2 and Watts Bar Nuclear Plant Unit 1, Revision 00.

[2] TVA Letter from H.R. Rogers to Framatome (J.P. Sheldon), Subject: Advanced Design Reactor Building Sump Strainers - Revised Seismic Response Spectra - N2N-066, dated February 27, 2006.

[3] ASME B&PV Code, Section III, Division 1, Subsections NB, NC, and Appendices, 1989 Edition.

[4] AES Calculation PCI-5464-S01, "Evaluation of Advanced Design Containment Building Sump Strainers - Watts Bar Unit 1", Revision 1.

[5] TVA Design Standard DS-C1.7.1, "General Anchorage to Concrete", Revision 11.

[6] Performance Contracting, Inc.(PCI), Sure-Flow Suction Strainer Drawings.

6a. PCI Drawing No. SFS-WB1-GA-00, "Sure-Flow Strainer General Arrangement", Revision 7.

6b. PCI Drawing No. SFS-WB1-GA-01, "Sure-Flow Strainer General Notes", Revision 12.

6c. PCI Drawing No. SFS-WB1-GA-02, "Sure-Flow Strainer Master Bill of Materials", Revision 9.

6d. PCI Drawing No. SFS-WB1-GA-03, "Sure-Flow Strainer General Arrangement Sections", Revision 9.

6e. PCI Drawing No. SFS-WB1-GA-04, "Sure-Flow Strainer General Arrangement Sections", Revision 9.

6f. PCI Drawing No. SFS-WB1-GA-06, "Sure-Flow Strainer General Arrangement-Support Beams", Revision 9.

6g. PCI Drawing No. SFS-WB1-GA-07, "Sure-Flow Strainer Lower Deck", Revision 11.

6h. PCI Drawing No. SFS-WB1-GA-08, "Sure-Flow Strainer Upper Seal Strips Layout", Revision 9.

6i. PCI Drawing No. SFS-WB1-GA-09, "Sure-Flow Strainer Sump Cover", Revision 10.

6j. PCI Drawing No. SFS-WB1-GA-10, "Sure-Flow Strainer General Arrangement - Top Cover", Revision 8.

6k. PCI Drawing No. SFS-WB1-GA-11, "Sure-Flow Strainer General Arrangement - Plenum Box", Revision 9.

6l. PCI Drawing No. SFS-WB1-GA-12, "Sure-Flow Strainer Seal Strips - Lower Plate Details", Revision 11.

6m. PCI Drawing No. SFS-WB1-GA-13, "Sure-Flow Strainer Cross Support General Arrangement", Revision 8.

6n. PCI Drawing No. SFS-WB1-GA-14, "Sure-Flow Strainer Access Cover", Revision 9.

6o. PCI Drawing No. SFS-WB1-PA-7100, "Sureflow Strainer Module Assembly - 6 Disk", Revision 9.

6p. PCI Drawing No. SFS-WB1-PA-7101, "Sureflow Strainer Module Assembly - 7 Disk", Revision 9.

6q. PCI Drawing No. SFS-WB1-PA-7102, "Sureflow Strainer Module Assembly", Revision 4.

6r. PCI Drawing No. SFS-WB1-PA-7103, "Sure-Flow Strainer Sections & Details", Revision 6.

6s. PCI Drawing No. SFS-WB1-PA-7104, "Sureflow Strainer Sleeves / Covers", Revision 7.

6t. PCI Drawing No. SFS-WB1-PA-7150, "Sureflow Strainer Support Beams", Revision 10.

6u. PCI Drawing No. SFS-WB1-PA-7151, "Sure-Flow Strainer Lower Deck", Revision 13.

6v. PCI Drawing No. SFS-WB1-PA-7152, "Sure-Flow Strainer Upper Seal Seal Strips", Revision 10.

6w. PCI Drawing No. SFS-WB1-PA-7153, "Sure-Flow Strainer Plenum Box", Revision 9.

6x. PCI Drawing No. SFS-WB1-PA-7154, "Sure-Flow Strainer Top Cover", Revision 9.

6y. PCI Drawing No. SFS-WB1-PA-7155, "Sure-Flow Strainer Cross Support", Revision 8.

6z. PCI Drawing No. SFS-WB1-PA-7156, "Sure-Flow Strainer Support Beams - Anchor Mount Details", Revision 10.

6aa. PCI Drawing No. SFS-WB1-PA-7157, "Sure-Flow Strainer Seal Strips - Lower Plate Details", Revision 10.

6ab. PCI Drawing No. SFS-WB1-PA-7158, "Sure-Flow Strainer General Arrangement - Sump Cover", Revision 8.

6ac. PCI Drawing No. SFS-WB1-PA-7159, "Sure-Flow Strainer Access Cover", Revision 7.

[7] Roark's Formulas for Stress and Strain, by Warren C. Young, 6th Edition, McGraw Hill.

[8] TVA Letter from H.R. Rogers to Framatome (J.P. Sheldon), Subject: Advanced Design Reactor Building Sump Strainers - Component Design and Analysis Clarifications- N2N-066, Letter No. 30M536, dated May 1, 2006.

[9] AISC Manual of Steel Construction, 7th Edition.

[10] AES Verification and Maintenance File for GTSTRUDL Version 25.

[11] GTSTRUDL User's Guide, "Analysis", Revision 1, June 1999.

[12] "Engineering Fluid Mechanics" by John A. Roberson and Clayton T. Crowe, 2nd Edition, Rudolf Steiner Press, 1969, Library of Congress Catalog Number 79-87855.

[13] Welding Formulas and Tables for Structural and Mechanical Engineers and Pipe Support Designers, by T.S. Hobert, I.V.I. Structural Design Service Portland Oregon.

[14] ASTM Specification A-193/193M-06a, "Standard Specification for Stainless Steel Bars and Shapes"

[15] Watts Bar Drawing 48N917, "Miscellaneous Steel Sump Liner Sheet 1", Revision 9

[16] PCI Technical Document TDI-6010-06, "Head Loss Qualification of Sure-Flow Suction Strainers at the Watts Bar Nuclear Plant", Revision 4.

[17] PCI Calculation TDI-6010-04, "Debris Weights on Modules Calculation", Revision 4.

[18] AWS D1.1/D1.1M:2002, "Structural Welding Code - Steel".

[19] ANSI/AWS D1.6:1999, "Structural Welding Code - Stainless Steel".

[20] "Marks' Standard Handbook for Mechanical Engineers", by Avallone, and Baumeister, 9th Edition, McGraw Hill.

[21] "American National Standard ANSI/AISC N690-1994, "Specification for the Design, Fabrication, and Erection of Steel Safety-Related Structures for Nuclear Facilities"

[22] ASCE Standard SEI/ASCE 8-02, "Specification for the Design of Cold-Formed Stainless Steel Structural Members".

[23] TRW Catalog IDD 01-90, Construction - Design Data Nelson Embedment Properties of Headed Studs",

[24] ASTM Specification A-276-02a, "Standard Specification for Stainless Steel Bars and Shapes"

[25] AISC Manual of Steel Construction, 9th Edition.

```
*TITLE  'PCI SUCTION PLENUM SUPPORT STRUCTURE'
STRUDL
UNITS INCHES POUNDS DEGREES SECONDS FAHRENHEIT
WARNING MESSAGE LIMIT 1
TYPE SPACE FRAME
$
$..................SUPPORT GEOMETRY.....................
$
JOINT COORDINATES
$
$  NODES FOR SUPPORT STRUCTURE (LOCATIONS FROM LEFT REAR BASE SUPPORT)
$
$============================BASE SUPPORT BEAM NODES================================
$
GENERATE 3 JOINTS ID 1,11   X  3.0    Z L 0.0 -32.0 -64.0
GENERATE 4 JOINTS ID 2,11   X 32.0    Z L 0.0 -32.0 -64.0 -96.0
REPEAT 3 ID 1 X INC 32.0
GENERATE 4 JOINTS ID 7,11   X 192.0   Z L 0.0 -32.0 -64.0 -96.0
REPEAT 1 ID 1 X INC 29.125
GENERATE 4 JOINTS ID 9,11   X 230.875 Z L 0.0 -32.0 -64.0 -96.0
REPEAT 1 ID 1 X INC 29.125
GENERATE 3 JOINTS ID 11,11  X 289.0   Z L   0.0 -32.0 -64.0
GENERATE 2 JOINTS ID 28,11  X 160.0   Z L -64.0 -96.0

$==============================RIGID MEM NODES FOR ANCHORS=======================
GENERATE 3 JOINTS ID 'WA1',11   X  3.0    Y -2.995  Z L 0.0 -32.0 -64.0
GENERATE 4 JOINTS ID 'WA2',11   X 32.0    Y -2.995  Z L 0.0 -32.0 -64.0 -96.0
REPEAT 3 ID 1 X INC 32.0
GENERATE 4 JOINTS ID 'WA7',11   X 192.0   Y -2.995  Z L 0.0 -32.0 -64.0 -96.0
REPEAT 1 ID 1 X INC 29.125
GENERATE 4 JOINTS ID 'WA9',11   X 230.875 Y -2.995  Z L 0.0 -32.0 -64.0 -96.0
REPEAT 1 ID 1 X INC 29.125
GENERATE 3 JOINTS ID 'WA11',11  X 289.0   Y -2.995  Z L   0.0 -32.0 -64.0
GENERATE 2 JOINTS ID 'WA28',11  X 160.0   Y -2.995  Z L -64.0 -96.0

$================================TOP FLANGE MEM NODES ==========================
GENERATE 3 JOINTS ID 'TF1',11   X  3.0    Y 2.865  Z L 0.0 -32.0 -64.0
GENERATE 4 JOINTS ID 'TF2',11   X 32.0    Y 2.865  Z L 0.0 -32.0 -64.0 -96.0
REPEAT 3 ID 1 X INC 32.0
GENERATE 4 JOINTS ID 'TF7',11   X 192.0   Y 2.865  Z L 0.0 -32.0 -64.0 -96.0
REPEAT 1 ID 1 X INC 29.125
GENERATE 4 JOINTS ID 'TF9',11   X 230.875 Y 2.865   Z L 0.0 -32.0 -64.0 -96.0
REPEAT 1 ID 1 X INC 29.125
GENERATE 3 JOINTS ID 'TF11',11  X 289.0   Y 2.865  Z L   0.0 -32.0 -64.0
GENERATE 2 JOINTS ID 'TF28',11   X 160.0   Y 2.865  Z L -64.0 -96.0

$============================LOWER DECK PLATES NODES================================
GENERATE 3 JOINTS ID 'BP1',11   X  3.0    Y 3.1825   Z L 0.0 -32.0 -64.0
GENERATE 4 JOINTS ID 'BP2',11   X 32.0    Y 3.1825   Z L 0.0 -32.0 -64.0 -96.0
REPEAT 4 ID 1 X INC 32.0
$GENERATE 2 JOINTS ID 'BP28',11 X 160.0   Y 3.1825   Z L -64.0 -96.0
GENERATE 4 JOINTS ID 'BP7',11   X 192.0   Y 3.1825   Z L 0.0 -32.0 -64.0 -96.0
REPEAT 1 ID 1 X INC 29.125
GENERATE 4 JOINTS ID 'BP9',11   X 230.875 Y 3.1825   Z L 0.0 -32.0 -64.0 -96.0
REPEAT 1 ID 1 X INC 29.125
GENERATE 3 JOINTS ID 'BP11',11  X 289.0   Y 3.1825   Z L 0.0 -32.0 -64.0

$========================TOP STUD AND COVER PLATES NODES============================
GENERATE 3 JOINTS ID 'TP1',11   X  3.0    Y 15.5575   Z L 0.0 -32.0 -64.0
GENERATE 4 JOINTS ID 'TP2',11   X 32.0    Y 15.5575   Z L 0.0 -32.0 -64.0 -96.0
REPEAT 4 ID 1 X INC 32.0
$GENERATE 2 JOINTS ID 'TP28',11 X 160.0   Y 15.5575   Z L -64.0 -96.0
GENERATE 4 JOINTS ID 'TP7',11   X 192.0   Y 15.5575   Z L 0.0 -32.0 -64.0 -96.0
REPEAT 1 ID 1 X INC 29.125
GENERATE 4 JOINTS ID 'TP9',11   X 230.875 Y 15.5575   Z L 0.0 -32.0 -64.0 -96.0
REPEAT 1 ID 1 X INC 29.125
GENERATE 3 JOINTS ID 'TP11',11  X 289.0   Y 15.5575   Z L 0.0 -32.0 -64.0

GENERATE 1 JOINTS ID 'S1',1     X   -1.375        Z L  -1.625           OFF 'TP1'
GENERATE 2 JOINTS ID 'S2',1     X L -1.625 1.625  Z L  -1.625  -1.625   OFF 'TP2'
REPEAT 1 ID 2 X INC 32.0
GENERATE 1 JOINTS ID 'S6',1     X L -1.625        Z L  -1.625           OFF 'TP4'
GENERATE 1 JOINTS ID 'S7',1     X L  1.625        Z L  -1.625           OFF 'TP5'
GENERATE 1 JOINTS ID 'S8',1     X L -1.625        Z L  -1.625           OFF 'TP6'
GENERATE 1 JOINTS ID 'S9',1     X L  1.625        Z L  -1.625           OFF 'TP7'
GENERATE 1 JOINTS ID 'S10',1    X L  1.25         Z L  -1.625           OFF 'TP8'
GENERATE 1 JOINTS ID 'S11',1    X L -1.25         Z L  -1.625           OFF 'TP9'
GENERATE 2 JOINTS ID 'S12',1    X L -1.625 1.625  Z L  -1.625  -1.625   OFF 'TP10'
GENERATE 1 JOINTS ID 'S14',1    X L  1.375        Z L  -1.625           OFF 'TP11'

GENERATE 1 JOINTS ID 'S15',1    X   -1.375        Z L   1.625           OFF 'TP12'
GENERATE 2 JOINTS ID 'S16',1    X L -1.625 1.625  Z L   1.625   1.625   OFF 'TP13'
REPEAT 1 ID 2 X INC 32.0
```

```
GENERATE 1 JOINTS ID 'S20',1    X L -1.625        Z L   1.625          OFF 'TP15'
GENERATE 1 JOINTS ID 'S21',1    X L  1.625        Z L   1.625          OFF 'TP16'
GENERATE 1 JOINTS ID 'S22',1    X L -1.625        Z L   1.625          OFF 'TP17'
GENERATE 1 JOINTS ID 'S23',1    X    1.625        Z L   1.625          OFF 'TP18'
GENERATE 1 JOINTS ID 'S24',1    X L  1.25         Z L   1.625          OFF 'TP19'
GENERATE 1 JOINTS ID 'S25',1    X   -1.25         Z L   1.625          OFF 'TP20'
GENERATE 2 JOINTS ID 'S26',1    X L -1.625 1.625  Z L   1.625   1.625  OFF 'TP21'
GENERATE 1 JOINTS ID 'S28',1    X L  1.375        Z L   1.625          OFF 'TP22'

GENERATE 1 JOINTS ID 'S29',1    X   -1.375        Z L  -1.625          OFF 'TP12'
GENERATE 2 JOINTS ID 'S30',1    X L -1.625 1.625  Z L  -1.625  -1.625  OFF 'TP13'
REPEAT 5 ID 2 X INC 32.0
GENERATE 1 JOINTS ID 'S42',1    X    1.25         Z L  -1.625          OFF 'TP19'
GENERATE 1 JOINTS ID 'S43',1    X   -1.25         Z L  -1.625          OFF 'TP20'
GENERATE 2 JOINTS ID 'S44',1    X L -1.625 1.625  Z L  -1.625  -1.625  OFF 'TP21'
GENERATE 1 JOINTS ID 'S46',1    X L  1.375        Z L  -1.625          OFF 'TP22'

GENERATE 1 JOINTS ID 'S47',1    X   -1.375        Z L   1.625          OFF 'TP23'
GENERATE 2 JOINTS ID 'S48',1    X L -1.625 1.625  Z L   1.625   1.625  OFF 'TP24'
REPEAT 5 ID 2 X INC 32.0
GENERATE 1 JOINTS ID 'S60',1    X    1.25         Z L   1.625          OFF 'TP30'
GENERATE 1 JOINTS ID 'S61',1    X   -1.25         Z L   1.625          OFF 'TP31'
GENERATE 2 JOINTS ID 'S62',1    X L -1.625 1.625  Z L   1.625   1.625  OFF 'TP32'
GENERATE 1 JOINTS ID 'S64',1    X L  1.375        Z L   1.625          OFF 'TP33'

GENERATE 1 JOINTS ID 'S65',1    X    1.625        Z L  -1.625          OFF 'TP24'
GENERATE 2 JOINTS ID 'S66',1    X L -1.625 1.625  Z L  -1.625  -1.625  OFF 'TP25'
REPEAT 4 ID 2 X INC 32.0
GENERATE 1 JOINTS ID 'S76',1    X    1.25         Z L  -1.625          OFF 'TP30'
GENERATE 1 JOINTS ID 'S77',1    X   -1.25         Z L  -1.625          OFF 'TP31'
GENERATE 1 JOINTS ID 'S78',1    X L -1.625        Z L  -1.625          OFF 'TP32'

GENERATE 1 JOINTS ID 'S79',1    X    1.625        Z L   1.625          OFF 'TP35'
GENERATE 2 JOINTS ID 'S80',1    X L -1.625 1.625  Z L   1.625   1.625  OFF 'TP36'
REPEAT 4 ID 2 X INC 32.0
GENERATE 1 JOINTS ID 'S90',1    X    1.25         Z L   1.625          OFF 'TP41'
GENERATE 1 JOINTS ID 'S91',1    X   -1.25         Z L   1.625          OFF 'TP42'
GENERATE 1 JOINTS ID 'S92',1    X L -1.625        Z L   1.625          OFF 'TP43'

$================================STUD RIGID NODES=========================================
GENERATE 1 JOINTS ID 'SR1',1   X   -1.375        Y 0.375  Z L  -1.625          OFF 'TP1'
GENERATE 2 JOINTS ID 'SR2',1   X L -1.625 1.625  Y 0.375  Z L  -1.625  -1.625  OFF 'TP2'
REPEAT 1 ID 2 X INC 32.0
GENERATE 1 JOINTS ID 'SR6',1   X L -1.625        Y 0.375  Z L  -1.625          OFF 'TP4'
GENERATE 1 JOINTS ID 'SR7',1   X L  1.625        Y 0.375  Z L  -1.625          OFF 'TP5'
GENERATE 1 JOINTS ID 'SR8',1   X L -1.625        Y 0.375  Z L  -1.625          OFF 'TP6'
GENERATE 1 JOINTS ID 'SR9',1   X L  1.625        Y 0.375  Z L  -1.625          OFF 'TP7'
GENERATE 1 JOINTS ID 'SR10',1  X L  1.25         Y 0.375  Z L  -1.625          OFF 'TP8'
GENERATE 1 JOINTS ID 'SR11',1  X L -1.25         Y 0.375  Z L  -1.625          OFF 'TP9'
GENERATE 2 JOINTS ID 'SR12',1  X L -1.625 1.625  Y 0.375  Z L  -1.625  -1.625  OFF 'TP10'
GENERATE 1 JOINTS ID 'SR14',1  X L  1.375        Y 0.375  Z L  -1.625          OFF 'TP11'

GENERATE 1 JOINTS ID 'SR15',1  X   -1.375        Y 0.375  Z L   1.625          OFF 'TP12'
GENERATE 2 JOINTS ID 'SR16',1  X L -1.625 1.625  Y 0.375  Z L   1.625   1.625  OFF 'TP13'
REPEAT 1 ID 2 X INC 32.0
GENERATE 1 JOINTS ID 'SR20',1  X L -1.625        Y 0.375  Z L   1.625          OFF 'TP15'
GENERATE 1 JOINTS ID 'SR21',1  X L  1.625        Y 0.375  Z L   1.625          OFF 'TP16'
GENERATE 1 JOINTS ID 'SR22',1  X L -1.625        Y 0.375  Z L   1.625          OFF 'TP17'
GENERATE 1 JOINTS ID 'SR23',1  X L  1.625        Y 0.375  Z L   1.625          OFF 'TP18'
GENERATE 1 JOINTS ID 'SR24',1  X L  1.25         Y 0.375  Z L   1.625          OFF 'TP19'
GENERATE 1 JOINTS ID 'SR25',1  X   -1.25         Y 0.375  Z L   1.625          OFF 'TP20'
GENERATE 2 JOINTS ID 'SR26',1  X L -1.625 1.625  Y 0.375  Z L   1.625   1.625  OFF 'TP21'
GENERATE 1 JOINTS ID 'SR28',1  X L  1.375        Y 0.375  Z L   1.625          OFF 'TP22'

GENERATE 1 JOINTS ID 'SR29',1  X   -1.375        Y 0.375  Z L  -1.625          OFF 'TP12'
GENERATE 2 JOINTS ID 'SR30',1  X L -1.625 1.625  Y 0.375  Z L  -1.625  -1.625  OFF 'TP13'
REPEAT 5 ID 2 X INC 32.0
GENERATE 1 JOINTS ID 'SR42',1  X    1.25         Y 0.375  Z L  -1.625          OFF 'TP19'
GENERATE 1 JOINTS ID 'SR43',1  X   -1.25         Y 0.375  Z L  -1.625          OFF 'TP20'
GENERATE 2 JOINTS ID 'SR44',1  X L -1.625 1.625  Y 0.375  Z L  -1.625  -1.625  OFF 'TP21'
GENERATE 1 JOINTS ID 'SR46',1  X L  1.375        Y 0.375  Z L  -1.625          OFF 'TP22'

GENERATE 1 JOINTS ID 'SR47',1  X   -1.375        Y 0.375  Z L   1.625          OFF 'TP23'
GENERATE 2 JOINTS ID 'SR48',1  X L -1.625 1.625  Y 0.375  Z L   1.625   1.625  OFF 'TP24'
REPEAT 5 ID 2 X INC 32.0
GENERATE 1 JOINTS ID 'SR60',1  X    1.25         Y 0.375  Z L   1.625          OFF 'TP30'
GENERATE 1 JOINTS ID 'SR61',1  X   -1.25         Y 0.375  Z L   1.625          OFF 'TP31'
GENERATE 2 JOINTS ID 'SR62',1  X L -1.625 1.625  Y 0.375  Z L   1.625   1.625  OFF 'TP32'
GENERATE 1 JOINTS ID 'SR64',1  X L  1.375        Y 0.375  Z L   1.625          OFF 'TP33'

GENERATE 1 JOINTS ID 'SR65',1  X    1.625        Y 0.375  Z L  -1.625          OFF 'TP24'
GENERATE 2 JOINTS ID 'SR66',1  X L -1.625 1.625  Y 0.375  Z L  -1.625  -1.625  OFF 'TP25'
REPEAT 4 ID 2 X INC 32.0
```

```
GENERATE 1 JOINTS ID 'SR76',1  X    1.25         Y 0.375  Z L  -1.625          OFF 'TP30'
GENERATE 1 JOINTS ID 'SR77',1  X   -1.25         Y 0.375  Z L  -1.625          OFF 'TP31'
GENERATE 1 JOINTS ID 'SR78',1  X L -1.625        Y 0.375  Z L  -1.625          OFF 'TP32'

GENERATE 1 JOINTS ID 'SR79',1  X    1.625        Y 0.375  Z L   1.625          OFF 'TP35'
GENERATE 2 JOINTS ID 'SR80',1  X L -1.625 1.625  Y 0.375  Z L   1.625   1.625  OFF 'TP36'
REPEAT 4 ID 2 X INC 32.0
GENERATE 1 JOINTS ID 'SR90',1  X    1.25         Y 0.375  Z L   1.625          OFF 'TP41'
GENERATE 1 JOINTS ID 'SR91',1  X   -1.25         Y 0.375  Z L   1.625          OFF 'TP42'
GENERATE 1 JOINTS ID 'SR92',1  X L -1.625        Y 0.375  Z L   1.625          OFF 'TP43'

GENERATE 1 JOINTS ID 'S93',1  X    1.625        Y 0.375  Z     -1.625         OFF 'TP4'
GENERATE 1 JOINTS ID 'S94',1  X   -1.625        Y 0.375  Z     -1.625         OFF 'TP5'
GENERATE 1 JOINTS ID 'S95',1  X    1.625        Y 0.375  Z     -1.625         OFF 'TP6'
GENERATE 1 JOINTS ID 'S96',1  X   -1.625        Y 0.375  Z     -1.625         OFF 'TP7'
GENERATE 1 JOINTS ID 'S97',1  X    1.625        Y 0.375  Z      1.625         OFF 'TP15'
GENERATE 1 JOINTS ID 'S98',1  X   -1.625        Y 0.375  Z      1.625         OFF 'TP16'
GENERATE 1 JOINTS ID 'S99',1  X    1.625        Y 0.375  Z      1.625         OFF 'TP17'
GENERATE 1 JOINTS ID 'S100',1 X   -1.625        Y 0.375  Z      1.625         OFF 'TP18'

$================================STUD RIGID NODES=====================================
GENERATE 1 JOINTS ID 'SR101',1  X   -1.375        Y 0.375  Z L  -1.625          OFF 'TP1'
GENERATE 2 JOINTS ID 'SR102',1  X L -1.625 1.625  Y 0.375  Z L  -1.625  -1.625  OFF 'TP2'
REPEAT 1 ID 2 X INC 32.0
GENERATE 1 JOINTS ID 'SR106',1  X L -1.625        Y 0.375  Z L  -1.625          OFF 'TP4'
GENERATE 1 JOINTS ID 'SR107',1  X L  1.625        Y 0.375  Z L  -1.625          OFF 'TP5'
GENERATE 1 JOINTS ID 'SR108',1  X L -1.625        Y 0.375  Z L  -1.625          OFF 'TP6'
GENERATE 1 JOINTS ID 'SR109',1  X L  1.625        Y 0.375  Z L  -1.625          OFF 'TP7'
GENERATE 1 JOINTS ID 'SR110',1  X L  1.25         Y 0.375  Z L  -1.625          OFF 'TP8'
GENERATE 1 JOINTS ID 'SR111',1  X L -1.25         Y 0.375  Z L  -1.625          OFF 'TP9'
GENERATE 2 JOINTS ID 'SR112',1  X L -1.625 1.625  Y 0.375  Z L  -1.625  -1.625  OFF 'TP10'
GENERATE 1 JOINTS ID 'SR114',1  X L  1.375        Y 0.375  Z L  -1.625          OFF 'TP11'

GENERATE 1 JOINTS ID 'SR115',1  X   -1.375        Y 0.375  Z L   1.625          OFF 'TP12'
GENERATE 2 JOINTS ID 'SR116',1  X L -1.625 1.625  Y 0.375  Z L   1.625   1.625  OFF 'TP13'
REPEAT 1 ID 2 X INC 32.0
GENERATE 1 JOINTS ID 'SR120',1  X L -1.625        Y 0.375  Z L   1.625          OFF 'TP15'
GENERATE 1 JOINTS ID 'SR121',1  X L  1.625        Y 0.375  Z L   1.625          OFF 'TP16'
GENERATE 1 JOINTS ID 'SR122',1  X L -1.625        Y 0.375  Z L   1.625          OFF 'TP17'
GENERATE 1 JOINTS ID 'SR123',1  X L  1.625        Y 0.375  Z L   1.625          OFF 'TP18'
GENERATE 1 JOINTS ID 'SR124',1  X L  1.25         Y 0.375  Z L   1.625          OFF 'TP19'
GENERATE 1 JOINTS ID 'SR125',1  X   -1.25         Y 0.375  Z L   1.625          OFF 'TP20'
GENERATE 2 JOINTS ID 'SR126',1  X L -1.625 1.625  Y 0.375  Z L   1.625   1.625  OFF 'TP21'
GENERATE 1 JOINTS ID 'SR128',1  X L  1.375        Y 0.375  Z L   1.625          OFF 'TP22'

GENERATE 1 JOINTS ID 'SR129',1  X   -1.375        Y 0.375  Z L  -1.625          OFF 'TP12'
GENERATE 2 JOINTS ID 'SR130',1  X L -1.625 1.625  Y 0.375  Z L  -1.625  -1.625  OFF 'TP13'
REPEAT 5 ID 2 X INC 32.0
GENERATE 1 JOINTS ID 'SR142',1  X    1.25         Y 0.375  Z L  -1.625          OFF 'TP19'
GENERATE 1 JOINTS ID 'SR143',1  X   -1.25         Y 0.375  Z L  -1.625          OFF 'TP20'
GENERATE 2 JOINTS ID 'SR144',1  X L -1.625 1.625  Y 0.375  Z L  -1.625  -1.625  OFF 'TP21'
GENERATE 1 JOINTS ID 'SR146',1  X L  1.375        Y 0.375  Z L  -1.625          OFF 'TP22'

GENERATE 1 JOINTS ID 'SR147',1  X   -1.375        Y 0.375  Z L   1.625          OFF 'TP23'
GENERATE 2 JOINTS ID 'SR148',1  X L -1.625 1.625  Y 0.375  Z L   1.625   1.625  OFF 'TP24'
REPEAT 5 ID 2 X INC 32.0
GENERATE 1 JOINTS ID 'SR160',1  X    1.25         Y 0.375  Z L   1.625          OFF 'TP30'
GENERATE 1 JOINTS ID 'SR161',1  X   -1.25         Y 0.375  Z L   1.625          OFF 'TP31'
GENERATE 2 JOINTS ID 'SR162',1  X L -1.625 1.625  Y 0.375  Z L   1.625   1.625  OFF 'TP32'
GENERATE 1 JOINTS ID 'SR164',1  X L  1.375        Y 0.375  Z L   1.625          OFF 'TP33'

GENERATE 1 JOINTS ID 'SR165',1  X    1.625        Y 0.375  Z L  -1.625          OFF 'TP24'
GENERATE 2 JOINTS ID 'SR166',1  X L -1.625 1.625  Y 0.375  Z L  -1.625  -1.625  OFF 'TP25'
REPEAT 4 ID 2 X INC 32.0
GENERATE 1 JOINTS ID 'SR176',1  X    1.25         Y 0.375  Z L  -1.625          OFF 'TP30'
GENERATE 1 JOINTS ID 'SR177',1  X   -1.25         Y 0.375  Z L  -1.625          OFF 'TP31'
GENERATE 1 JOINTS ID 'SR178',1  X L -1.625        Y 0.375  Z L  -1.625          OFF 'TP32'

GENERATE 1 JOINTS ID 'SR179',1  X    1.625        Y 0.375  Z L   1.625          OFF 'TP35'
GENERATE 2 JOINTS ID 'SR180',1  X L -1.625 1.625  Y 0.375  Z L   1.625   1.625  OFF 'TP36'
REPEAT 4 ID 2 X INC 32.0
GENERATE 1 JOINTS ID 'SR190',1  X    1.25         Y 0.375  Z L   1.625          OFF 'TP41'
GENERATE 1 JOINTS ID 'SR191',1  X   -1.25         Y 0.375  Z L   1.625          OFF 'TP42'
GENERATE 1 JOINTS ID 'SR192',1  X L -1.625        Y 0.375  Z L   1.625          OFF 'TP43'

GENERATE 1 JOINTS ID 'SR193',1  X    1.625        Y 0.375  Z     -1.625         OFF 'TP4'
GENERATE 1 JOINTS ID 'SR194',1  X   -1.625        Y 0.375  Z     -1.625         OFF 'TP5'
GENERATE 1 JOINTS ID 'SR195',1  X    1.625        Y 0.375  Z     -1.625         OFF 'TP6'
GENERATE 1 JOINTS ID 'SR196',1  X   -1.625        Y 0.375  Z     -1.625         OFF 'TP7'
GENERATE 1 JOINTS ID 'SR197',1  X    1.625        Y 0.375  Z      1.625         OFF 'TP15'
GENERATE 1 JOINTS ID 'SR198',1  X   -1.625        Y 0.375  Z      1.625         OFF 'TP16'
GENERATE 1 JOINTS ID 'SR199',1  X    1.625        Y 0.375  Z      1.625         OFF 'TP17'
GENERATE 1 JOINTS ID 'SR200',1  X   -1.625        Y 0.375  Z      1.625         OFF 'TP18'
```

```
GENERATE 1 JOINTS ID 'SR201',1  X    0.000        Y 0.000  Z     -6.375         OFF 'SR193'
GENERATE 1 JOINTS ID 'SR202',1  X    0.000        Y 0.000  Z     -6.375         OFF 'SR194'
GENERATE 1 JOINTS ID 'SR203',1  X    0.000        Y 0.000  Z     -6.375         OFF 'SR195'
GENERATE 1 JOINTS ID 'SR204',1  X    0.000        Y 0.000  Z     -6.375         OFF 'SR196'
GENERATE 1 JOINTS ID 'SR205',1  X    0.000        Y 0.000  Z      6.375         OFF 'SR197'
GENERATE 1 JOINTS ID 'SR206',1  X    0.000        Y 0.000  Z      6.375         OFF 'SR198'
GENERATE 1 JOINTS ID 'SR207',1  X    0.000        Y 0.000  Z      6.375         OFF 'SR199'
GENERATE 1 JOINTS ID 'SR208',1  X    0.000        Y 0.000  Z      6.375         OFF 'SR200'
$===================================HEX NODES=========================================
GENERATE 1 JOINTS ID 'HR1',1   X   -1.375        Y 0.875  Z L  -1.625          OFF 'TP1'
GENERATE 2 JOINTS ID 'HR2',1   X L -1.625 1.625  Y 0.875  Z L  -1.625  -1.625  OFF 'TP2'
REPEAT 1 ID 2 X INC 32.0
GENERATE 1 JOINTS ID 'HR6',1   X L -1.625        Y 0.875  Z L  -1.625          OFF 'TP4'
GENERATE 1 JOINTS ID 'HR7',1   X L  1.625        Y 0.875  Z L  -1.625          OFF 'TP5'
GENERATE 1 JOINTS ID 'HR8',1   X L -1.625        Y 0.875  Z L  -1.625          OFF 'TP6'
GENERATE 1 JOINTS ID 'HR9',1   X L  1.625        Y 0.875  Z L  -1.625          OFF 'TP7'
GENERATE 1 JOINTS ID 'HR10',1  X L  1.25         Y 0.875  Z L  -1.625          OFF 'TP8'
GENERATE 1 JOINTS ID 'HR11',1  X L -1.25         Y 0.875  Z L  -1.625          OFF 'TP9'
GENERATE 2 JOINTS ID 'HR12',1  X L -1.625 1.625  Y 0.875  Z L  -1.625  -1.625  OFF 'TP10'
GENERATE 1 JOINTS ID 'HR14',1  X L  1.375        Y 0.875  Z L  -1.625          OFF 'TP11'

GENERATE 1 JOINTS ID 'HR15',1  X   -1.375        Y 0.875  Z L   1.625          OFF 'TP12'
GENERATE 2 JOINTS ID 'HR16',1  X L -1.625 1.625  Y 0.875  Z L   1.625   1.625  OFF 'TP13'
REPEAT 1 ID 2 X INC 32.0
GENERATE 1 JOINTS ID 'HR20',1  X L -1.625        Y 0.875  Z L   1.625          OFF 'TP15'
GENERATE 1 JOINTS ID 'HR21',1  X L  1.625        Y 0.875  Z L   1.625          OFF 'TP16'
GENERATE 1 JOINTS ID 'HR22',1  X L -1.625        Y 0.875  Z L   1.625          OFF 'TP17'
GENERATE 1 JOINTS ID 'HR23',1  X L  1.625        Y 0.875  Z L   1.625          OFF 'TP18'
GENERATE 1 JOINTS ID 'HR24',1  X L  1.25         Y 0.875  Z L   1.625          OFF 'TP19'
GENERATE 1 JOINTS ID 'HR25',1  X   -1.25         Y 0.875  Z L   1.625          OFF 'TP20'
GENERATE 2 JOINTS ID 'HR26',1  X L -1.625 1.625  Y 0.875  Z L   1.625   1.625  OFF 'TP21'
GENERATE 1 JOINTS ID 'HR28',1  X L  1.375        Y 0.875  Z L   1.625          OFF 'TP22'

GENERATE 1 JOINTS ID 'HR29',1  X   -1.375        Y 0.875  Z L  -1.625          OFF 'TP12'
GENERATE 2 JOINTS ID 'HR30',1  X L -1.625 1.625  Y 0.875  Z L  -1.625  -1.625  OFF 'TP13'
REPEAT 5 ID 2 X INC 32.0
GENERATE 1 JOINTS ID 'HR42',1  X    1.25         Y 0.875  Z L  -1.625          OFF 'TP19'
GENERATE 1 JOINTS ID 'HR43',1  X   -1.25         Y 0.875  Z L  -1.625          OFF 'TP20'
GENERATE 2 JOINTS ID 'HR44',1  X L -1.625 1.625  Y 0.875  Z L  -1.625  -1.625  OFF 'TP21'
GENERATE 1 JOINTS ID 'HR46',1  X L  1.375        Y 0.875  Z L  -1.625          OFF 'TP22'

GENERATE 1 JOINTS ID 'HR47',1  X   -1.375        Y 0.875  Z L   1.625          OFF 'TP23'
GENERATE 2 JOINTS ID 'HR48',1  X L -1.625 1.625  Y 0.875  Z L   1.625   1.625  OFF 'TP24'
REPEAT 5 ID 2 X INC 32.0
GENERATE 1 JOINTS ID 'HR60',1  X    1.25         Y 0.875  Z L   1.625          OFF 'TP30'
GENERATE 1 JOINTS ID 'HR61',1  X   -1.25         Y 0.875  Z L   1.625          OFF 'TP31'
GENERATE 2 JOINTS ID 'HR62',1  X L -1.625 1.625  Y 0.875  Z L   1.625   1.625  OFF 'TP32'
GENERATE 1 JOINTS ID 'HR64',1  X L  1.375        Y 0.875  Z L   1.625          OFF 'TP33'

GENERATE 1 JOINTS ID 'HR65',1  X    1.625        Y 0.875  Z L  -1.625          OFF 'TP24'
GENERATE 2 JOINTS ID 'HR66',1  X L -1.625 1.625  Y 0.875  Z L  -1.625  -1.625  OFF 'TP25'
REPEAT 4 ID 2 X INC 32.0
GENERATE 1 JOINTS ID 'HR76',1  X    1.25         Y 0.875  Z L  -1.625          OFF 'TP30'
GENERATE 1 JOINTS ID 'HR77',1  X   -1.25         Y 0.875  Z L  -1.625          OFF 'TP31'
GENERATE 1 JOINTS ID 'HR78',1  X L -1.625        Y 0.875  Z L  -1.625          OFF 'TP32'

GENERATE 1 JOINTS ID 'HR79',1  X    1.625        Y 0.875  Z L   1.625          OFF 'TP35'
GENERATE 2 JOINTS ID 'HR80',1  X L -1.625 1.625  Y 0.875  Z L   1.625   1.625  OFF 'TP36'
REPEAT 4 ID 2 X INC 32.0
GENERATE 1 JOINTS ID 'HR90',1  X    1.25         Y 0.875  Z L   1.625          OFF 'TP41'
GENERATE 1 JOINTS ID 'HR91',1  X   -1.25         Y 0.875  Z L   1.625          OFF 'TP42'
GENERATE 1 JOINTS ID 'HR92',1  X L -1.625        Y 0.875  Z L   1.625          OFF 'TP43'

$===================================STRAINERS NODES=====================================
GENERATE 1 JOINTS ID 'SA1',1   X 13.00           Y 0.875  Z L  -16.00          OFF 'TP1'
GENERATE 1 JOINTS ID 'SA2',1   X 16.00           Y 0.875  Z L  -16.00          OFF 'TP2'
GENERATE 1 JOINTS ID 'SA3',1   X 16.00           Y 0.875  Z L  -16.00          OFF 'TP3'
GENERATE 1 JOINTS ID 'SA4',1   X 16.00           Y 0.875  Z L  -16.00          OFF 'TP5'
GENERATE 1 JOINTS ID 'SA5',1   X 16.00           Y 0.875  Z L  -16.00          OFF 'TP7'
GENERATE 1 JOINTS ID 'SA6',1   X 13.125          Y 0.875  Z L  -16.00          OFF 'TP9'
GENERATE 1 JOINTS ID 'SA7',1   X 16.00           Y 0.875  Z L  -16.00          OFF 'TP10'

GENERATE 1 JOINTS ID 'SB1',1   X 13.00           Y 0.875  Z L  -16.00          OFF 'TP12'
REPEAT 6 ID 1 X INC 32.0
GENERATE 1 JOINTS ID 'SB8',1   X 13.125          Y 0.875  Z L  -16.00          OFF 'TP20'
REPEAT 1 ID 1 X INC 32.0

GENERATE 1 JOINTS ID 'SC1',1   X 16.00           Y 0.875  Z L  -16.00          OFF 'TP24'
REPEAT 5 ID 1 X INC 32.0
GENERATE 1 JOINTS ID 'SC7',1   X 13.125          Y 0.875   Z L   -16.00        OFF 'TP31'

$=========================== LOWER SEAL STRIP PLATES NODES==============================
```

```
$GENERATE 3 JOINTS ID 'P1',9            Y 0.25   Z L 0.0 -32.0 -64.0          OFF 'BP2'
$GENERATE 4 JOINTS ID 'P2',9    X 29.0  Y 0.25   Z L 0.0 -32.0 -64.0 -96.0    OFF 'BP2'
$REPEAT 5 ID 1 X INC 32.0
$GENERATE 4 JOINTS ID 'P8',9    X 196.0 Y 0.25   Z L 0.0 -32.0 -64.0 -96.0    OFF 'BP2'
$GENERATE 3 JOINTS ID 'P9',9    X 228.0 Y 0.25   Z L 0.0 -32.0 -64.0          OFF 'BP2'

$==========================TOP SEAL STRIP PLATES NODES==================================
$GENERATE 3 JOINTS ID 'P41',9           Y 11.75   Z L 0.0 -32.0 -64.0         OFF 'BP2'
$GENERATE 4 JOINTS ID 'P42',9   X 32.0  Y 11.75   Z L 0.0 -32.0 -64.0 -96.0   OFF 'BP2'
$REPEAT 5 ID 1 X INC 32.0
$GENERATE 4 JOINTS ID 'P48',9   X 196.0 Y 11.75   Z L 0.0 -32.0 -64.0 -96.0   OFF 'BP2'
$GENERATE 3 JOINTS ID 'P49',9   X 228.0 Y 11.75   Z L 0.0 -32.0 -64.0         OFF 'BP2'

GENERATE 1 JOINTS ID 'P101',1  Y -4.5   OFF 'TP16'
REPEAT 2 ID 1 X INC 32.0
GENERATE 1 JOINTS ID 'P104',1  Y -4.5   OFF 'TP27'
REPEAT 2 ID 1 X INC 32.0

$==========================PLENUM CHANNELS NODES=====================================
GENERATE 1 JOINTS ID 'C1',1    Y 6.1875  OFF 'BP1'
GENERATE 1 JOINTS ID 'C2',1    Y 6.1875  OFF 'BP2'
REPEAT 4 ID 1 X INC 32.0
GENERATE 1 JOINTS ID 'C7',1    Y 6.1875  OFF 'BP7'
GENERATE 1 JOINTS ID 'C8',1    Y 6.1875  OFF 'BP8'
GENERATE 1 JOINTS ID 'C9',1    Y 6.1875  OFF 'BP9'
GENERATE 2 JOINTS ID 'C10',1   X L 29.125 58.125  OFF 'C9'

GENERATE 2 JOINTS ID 'C12',2   Y 6.1875  Z L 0.0 -32.0  OFF 'BP12'
GENERATE 2 JOINTS ID 'C13',4   Y 6.1875  Z L 0.0 -32.0  OFF 'BP22'
GENERATE 1 JOINTS ID 'C15',1   Y 6.1875  OFF 'BP24'
GENERATE 1 JOINTS ID 'C16',1   Y 6.1875  OFF 'BP32'
GENERATE 1 JOINTS ID 'C18',1   Y 6.1875  OFF 'BP35'
REPEAT 4 ID 1 X INC 32.0
GENERATE 1 JOINTS ID 'C23',1   Y 6.1875  OFF 'BP40'
GENERATE 1 JOINTS ID 'C24',1   Y 6.1875  OFF 'BP41'
GENERATE 2 JOINTS ID 'C25',1   X L 9.75 38.875 OFF 'C24'

GENERATE 1 JOINTS ID 'C27',1   X -40.028                OFF 'C7'
GENERATE 1 JOINTS ID 'C28',1   X -32.858    Z  19.205   OFF 'C7'
GENERATE 1 JOINTS ID 'C29',1   X   2.273    Z   6.089   OFF 'C7'

GENERATE 1 JOINTS ID 'TC27',1  Y -12.36                  OFF 'C27'
GENERATE 1 JOINTS ID 'TC28',1  Y -12.36                  OFF 'C28'
GENERATE 1 JOINTS ID 'TC29',1  Y -12.36                  OFF 'C29'

$==========================STICK MODEL NODES=========================================
GENERATE 1 JOINTS  ID 'AA1',1    Y  0.25                        OFF 'SA1'
GENERATE 4 JOINTS  ID 'AA2',1    Y 13.3372 INC 11.7176          OFF 'AA1'
GENERATE 4 JOI CYL ID 'AA101',1  R 15.25 TH 45.0, 90.0          OFF 'AA1'
GENERATE 4 JOI CYL ID 'AA201',1  R 15.25 TH 45.0, 90.0          OFF 'AA2'
REPEAT 3 ID 100 LY 11.7176

GENERATE 1 JOINTS ID  'AB1',1    Y  0.25                        OFF 'SA2'
GENERATE 4 JOINTS  ID 'AB2',1    Y 13.3372 INC 11.7176          OFF 'AB1'
GENERATE 4 JOI CYL ID 'AB101',1  R 15.25 TH 45.0, 90.0          OFF 'AB1'
GENERATE 4 JOI CYL ID 'AB201',1  R 15.25 TH 45.0, 90.0          OFF 'AB2'
REPEAT 3 ID 100 LY 11.7176

GENERATE 1 JOINTS ID  'AC1',1    Y  0.25                        OFF 'SA3'
GENERATE 4 JOINTS  ID 'AC2',1    Y 13.3372 INC 11.7176          OFF 'AC1'
GENERATE 4 JOI CYL ID 'AC101',1  R 15.25 TH 45.0, 90.0          OFF 'AC1'
GENERATE 4 JOI CYL ID 'AC201',1  R 15.25 TH 45.0, 90.0          OFF 'AC2'
REPEAT 3 ID 100 LY 11.7176

GENERATE 1 JOINTS ID  'AE1',1    Y  0.25                        OFF 'SA4'
GENERATE 4 JOINTS  ID 'AE2',1    Y 13.3372 INC 11.7176          OFF 'AE1'
GENERATE 4 JOI CYL ID 'AE101',1  R 15.25 TH 45.0, 90.0          OFF 'AE1'
GENERATE 4 JOI CYL ID 'AE201',1  R 15.25 TH 45.0, 90.0          OFF 'AE2'
REPEAT 3 ID 100 LY 11.7176

GENERATE 1 JOINTS ID  'AG1',1    Y  0.25                        OFF 'SA5'
GENERATE 4 JOINTS  ID 'AG2',1    Y 13.3372 INC 11.7176          OFF 'AG1'
GENERATE 4 JOI CYL ID 'AG101',1  R 15.25 TH 45.0, 90.0          OFF 'AG1'
GENERATE 4 JOI CYL ID 'AG201',1  R 15.25 TH 45.0, 90.0          OFF 'AG2'
REPEAT 3 ID 100 LY 11.7176

GENERATE 1 JOINTS ID  'AH1',1    Y  0.25                        OFF 'SA6'
GENERATE 4 JOINTS  ID 'AH2',1    Y 13.3372 INC 11.7176          OFF 'AH1'
GENERATE 4 JOI CYL ID 'AH101',1  R 15.25 TH 45.0, 90.0          OFF 'AH1'
GENERATE 4 JOI CYL ID 'AH201',1  R 15.25 TH 45.0, 90.0          OFF 'AH2'
REPEAT 3 ID 100 LY 11.7176

GENERATE 1 JOINTS ID  'AJ1',1    Y  0.25                        OFF 'SA7'
```

```
GENERATE 4 JOINTS  ID 'AJ2',1    Y 13.3372 INC 11.7176          OFF 'AJ1'
GENERATE 4 JOI CYL ID 'AJ101',1  R 15.25 TH 45.0, 90.0          OFF 'AJ1'
GENERATE 4 JOI CYL ID 'AJ201',1  R 15.25 TH 45.0, 90.0          OFF 'AJ2'
REPEAT 3 ID 100 LY 11.7176
GENERATE 1 JOINTS  ID 'BA1',1    Y  0.25                        OFF 'SB1'
GENERATE 4 JOINTS  ID 'BA2',1    Y 13.3372 INC 11.7176          OFF 'BA1'
GENERATE 4 JOI CYL ID 'BA101',1  R 15.25 TH 45.0, 90.0          OFF 'BA1'
GENERATE 4 JOI CYL ID 'BA201',1  R 15.25 TH 45.0, 90.0          OFF 'BA2'
REPEAT 3 ID 100 LY 11.7176

GENERATE 1 JOINTS ID  'BB1',1    Y  0.25                        OFF 'SB2'
GENERATE 4 JOINTS  ID 'BB2',1    Y 13.3372 INC 11.7176          OFF 'BB1'
GENERATE 4 JOI CYL ID 'BB101',1  R 15.25 TH 45.0, 90.0          OFF 'BB1'
GENERATE 4 JOI CYL ID 'BB201',1  R 15.25 TH 45.0, 90.0          OFF 'BB2'
REPEAT 3 ID 100 LY 11.7176

GENERATE 1 JOINTS ID  'BC1',1    Y  0.25                        OFF 'SB3'
GENERATE 4 JOINTS  ID 'BC2',1    Y 13.3372 INC 11.7176          OFF 'BC1'
GENERATE 4 JOI CYL ID 'BC101',1  R 15.25 TH 45.0, 90.0          OFF 'BC1'
GENERATE 4 JOI CYL ID 'BC201',1  R 15.25 TH 45.0, 90.0          OFF 'BC2'
REPEAT 3 ID 100 LY 11.7176

GENERATE 1 JOINTS ID  'BD1',1    Y  0.25                        OFF 'SB4'
GENERATE 4 JOINTS  ID 'BD2',1    Y 13.3372 INC 11.7176          OFF 'BD1'
GENERATE 4 JOI CYL ID 'BD101',1  R 15.25 TH 45.0, 90.0          OFF 'BD1'
GENERATE 4 JOI CYL ID 'BD201',1  R 15.25 TH 45.0, 90.0          OFF 'BD2'
REPEAT 3 ID 100 LY 11.7176

GENERATE 1 JOINTS ID  'BE1',1    Y  0.25                        OFF 'SB5'
GENERATE 3 JOINTS  ID 'BE2',1    Y 13.3372 INC 13.3372          OFF 'BE1'
GENERATE 4 JOI CYL ID 'BE101',1  R 15.25 TH 45.0, 90.0          OFF 'BE1'
REPEAT 3 ID 100 LY 13.3372

GENERATE 1 JOINTS ID  'BF1',1    Y  0.25                        OFF 'SB6'
GENERATE 3 JOINTS  ID 'BF2',1    Y 13.3372 INC 13.3372          OFF 'BF1'
GENERATE 4 JOI CYL ID 'BF101',1  R 15.25 TH 45.0, 90.0          OFF 'BF1'
REPEAT 3 ID 100 LY 13.3372

GENERATE 1 JOINTS ID  'BG1',1    Y  0.25                        OFF 'SB7'
GENERATE 3 JOINTS  ID 'BG2',1    Y 13.3372 INC 13.3372          OFF 'BG1'
GENERATE 4 JOI CYL ID 'BG101',1  R 15.25 TH 45.0, 90.0          OFF 'BG1'
REPEAT 3 ID 100 LY 13.3372

GENERATE 1 JOINTS ID  'BH1',1    Y  0.25                        OFF 'SB8'
GENERATE 3 JOINTS  ID 'BH2',1    Y 13.3372 INC 13.3372          OFF 'BH1'
GENERATE 4 JOI CYL ID 'BH101',1  R 15.25 TH 45.0, 90.0          OFF 'BH1'
REPEAT 3 ID 100 LY 13.3372

GENERATE 1 JOINTS ID  'BJ1',1    Y  0.25                        OFF 'SB9'
GENERATE 3 JOINTS  ID 'BJ2',1    Y 13.3372 INC 13.3372          OFF 'BJ1'
GENERATE 4 JOI CYL ID 'BJ101',1  R 15.25 TH 45.0, 90.0          OFF 'BJ1'
REPEAT 3 ID 100 LY 13.3372

GENERATE 1 JOINTS ID  'CB1',1    Y  0.25                        OFF 'SC1'
GENERATE 4 JOINTS  ID 'CB2',1    Y 13.3372 INC 11.7176          OFF 'CB1'
GENERATE 4 JOI CYL ID 'CB101',1  R 15.25 TH 45.0, 90.0          OFF 'CB1'
GENERATE 4 JOI CYL ID 'CB201',1  R 15.25 TH 45.0, 90.0          OFF 'CB2'
REPEAT 3 ID 100 LY 11.7176

GENERATE 1 JOINTS ID  'CC1',1    Y  0.25                        OFF 'SC2'
GENERATE 4 JOINTS  ID 'CC2',1    Y 13.3372 INC 11.7176          OFF 'CC1'
GENERATE 4 JOI CYL ID 'CC101',1  R 15.25 TH 45.0, 90.0          OFF 'CC1'
GENERATE 4 JOI CYL ID 'CC201',1  R 15.25 TH 45.0, 90.0          OFF 'CC2'
REPEAT 3 ID 100 LY 11.7176

GENERATE 1 JOINTS ID  'CD1',1    Y  0.25                        OFF 'SC3'
GENERATE 4 JOINTS  ID 'CD2',1    Y 13.3372 INC 11.7176          OFF 'CD1'
GENERATE 4 JOI CYL ID 'CD101',1  R 15.25 TH 45.0, 90.0          OFF 'CD1'
GENERATE 4 JOI CYL ID 'CD201',1  R 15.25 TH 45.0, 90.0          OFF 'CD2'
REPEAT 3 ID 100 LY 11.7176

GENERATE 1 JOINTS ID  'CE1',1    Y  0.25                        OFF 'SC4'
GENERATE 3 JOINTS  ID 'CE2',1    Y 13.3372 INC 13.3372          OFF 'CE1'
GENERATE 4 JOI CYL ID 'CE101',1  R 15.25 TH 45.0, 90.0          OFF 'CE1'
REPEAT 3 ID 100 LY 13.3372

GENERATE 1 JOINTS ID  'CF1',1    Y  0.25                        OFF 'SC5'
GENERATE 3 JOINTS  ID 'CF2',1    Y 13.3372 INC 13.3372          OFF 'CF1'
GENERATE 4 JOI CYL ID 'CF101',1  R 15.25 TH 45.0, 90.0          OFF 'CF1'
REPEAT 3 ID 100 LY 13.3372

GENERATE 1 JOINTS ID  'CG1',1    Y  0.25                        OFF 'SC6'
GENERATE 3 JOINTS  ID 'CG2',1    Y 13.3372 INC 13.3372          OFF 'CG1'
```

```
GENERATE 4 JOI CYL ID 'CG101',1  R 15.25 TH 45.0, 90.0          OFF 'CG1'
REPEAT 3 ID 100 LY 13.3372

GENERATE 1 JOINTS ID  'CH1',1    Y  0.25                        OFF 'SC7'
GENERATE 3 JOINTS  ID 'CH2',1    Y 13.3372 INC 13.3372          OFF 'CH1'
GENERATE 4 JOI CYL ID 'CH101',1  R 15.25 TH 45.0, 90.0          OFF 'CH1'
REPEAT 3 ID 100 LY 13.3372

$==============================BEAM MEMBERS==============================================
MEMBER INCIDENCES
GENERATE 2 MEMBERS LIST
'BEAM1'   1  12
'BEAM2'  12  23

GENERATE 3 MEMBERS LIST
'BEAM3'   2  13
'BEAM4'  13  24
'BEAM5'  24  35

REPEAT 3 LIST
 3  1   1
 6  2   2
 9  3   3

GENERATE 3 MEMBERS LIST
'BEAM15'   7  18
'BEAM16'  18  29
'BEAM17'  29  40

REPEAT 3 LIST
 3  1   1
 6  2   2
 9  3   3

GENERATE 3 MEMBERS LIST
'BEAM27'  11  22
'BEAM28'  22  33
'BEAM29'  28  39
$==============================BOTTOM RIGID BEAM MEMBERS==============================
MEMBER INCIDENCES
GENERATE 3 MEMBERS LIST
'RIGD1'    1   'WA1'
'RIGD2'   12   'WA12'
'RIGD3'   23   'WA23'

GENERATE 4 MEMBERS LIST
'RIGD4'    2   'WA2'
'RIGD5'   13   'WA13'
'RIGD6'   24   'WA24'
'RIGD7'   35   'WA35'

REPEAT 3 LIST
 4   1   1
 8   2   2
12   3   3

GENERATE 4 MEMBERS LIST
'RIGD20'    7   'WA7'
'RIGD21'   18   'WA18'
'RIGD22'   29   'WA29'
'RIGD23'   40   'WA40'

REPEAT 3 LIST
 4   1   1
 8   2   2
12   3   3

GENERATE 5 MEMBERS LIST
'RIGD36'   11   'WA11'
'RIGD37'   22   'WA22'
'RIGD38'   33   'WA33'

$==============================TOP RIGID BEAM MEMBERS==============================
GENERATE 3 MEMBERS LIST
'RIGD39'    1   'TF1'
'RIGD40'   12   'TF12'
'RIGD41'   23   'TF23'

GENERATE 4 MEMBERS LIST
'RIGD42'    2   'TF2'
'RIGD43'   13   'TF13'
'RIGD44'   24   'TF24'
'RIGD45'   35   'TF35'
```

```
REPEAT 3 LIST
 4   1   1
 8   2   2
12   3   3

GENERATE 4 MEMBERS LIST
'RIGD58'    7   'TF7'
'RIGD59'   18   'TF18'
'RIGD60'   29   'TF29'
'RIGD61'   40   'TF40'

REPEAT 3 LIST
 4   1   1
 8   2   2
12   3   3

GENERATE 5 MEMBERS LIST
'RIGD74'   11   'TF11'
'RIGD75'   22   'TF22'
'RIGD76'   33   'TF33'

GENERATE 4 MEMBERS LIST
'RIGD186'   28   'WA28'
'RIGD187'   39   'WA39'
'RIGD188'   28   'TF28'
'RIGD189'   39   'TF39'

$=============RIGID MEMBERS BETWEEN LOWER PLATE AND TOP FLANGE===================
GENERATE 10 MEMBERS LIST
'RIGD77'   'TF1'  'BP1'
'RIGD78'   'TF2'  'BP2'
'RIGD79'   'TF3'  'BP3'
'RIGD80'   'TF4'  'BP4'
'RIGD81'   'TF5'  'BP5'
'RIGD82'   'TF7'  'BP7'
'RIGD83'   'TF8'  'BP8'
'RIGD84'   'TF9'  'BP9'
'RIGD85'   'TF10' 'BP10'
'RIGD86'   'TF11' 'BP11'

REPEAT 1 LIST
10   11   11

GENERATE 2 MEMBERS LIST
'RIGD97'   'TF23'  'BP23'
'RIGD98'   'TF24'  'BP24'

GENERATE 9 MEMBERS LIST
'RIGD99'   'TF25'  'BP25'
'RIGD100'  'TF26'  'BP26'
'RIGD101'  'TF27'  'BP27'
'RIGD102'  'TF28'  'BP28'
'RIGD103'  'TF29'  'BP29'
'RIGD104'  'TF30'  'BP30'
'RIGD105'  'TF31'  'BP31'
'RIGD106'  'TF32'  'BP32'
'RIGD107'  'TF33'  'BP33'

GENERATE 9 MEMBERS LIST
'RIGD108'  'TF35'  'BP35'
'RIGD109'  'TF36'  'BP36'
'RIGD110'  'TF37'  'BP37'

'RIGD163'  'TF38'  'BP38'
'RIGD164'  'TF39'  'BP39'
'RIGD165'  'TF40'  'BP40'
'RIGD166'  'TF41'  'BP41'
'RIGD167'  'TF42'  'BP42'
'RIGD168'  'TF43'  'BP43'

$===========RIGID MEMBERS BETWEEN LOWER PLATE  AND PLENUM CHANNELS===================
GENERATE 1 MEMBERS LIST
'RIGD111'   'BP1'   'C1'
REPEAT 25 LIST
  1    1    1
  2    2    2
  3    3    3
  4    4    4
  5    5    5
  6    6    6
  7    7    7
  8    8    8
```

```
  9    9    9
 10   10   10
 11   11   11
 12   21   12
 13   22   13
 14   23   14
 15   31   15
 16   32   16
 17   34   17
 18   35   18
 19   36   19
 20   37   20
 21   38   21
 22   39   22
 23   40   23
 24   41   24
 25   42   25

$==========RIGID MEMBERS BETWEEN PLENUM CHANNELS AND TOP PLATE===================
GENERATE 1 MEMBERS LIST
'RIGD137'   'C1'   'TP1'
REPEAT 25 LIST
  1    1    1
  2    2    2
  3    3    3
  4    4    4
  5    5    5
  6    6    6
  7    7    7
  8    8    8
  9    9    9
 10   10   10
 11   11   11
 12   12   21
 13   13   22
 14   14   23
 15   15   31
 16   16   32
 17   17   34
 18   18   35
 19   19   36
 20   20   37
 21   21   38
 22   22   39
 23   23   40
 24   24   41
 25   25   42

GENERATE 3 MEMBERS LIST
'RIGD182'   'TC27'  'C27'
'RIGD183'   'TC28'  'C28'
'RIGD184'   'TC29'  'C29'


$=========================STUD RIGID MEMBERS==========================================
MEMBER INCIDENCES
GENERATE 14 MEMBERS LIST
'SRGD1'   'TP1'   'S1'
'SRGD2'   'TP2'   'S2'
'SRGD3'   'TP2'   'S3'
'SRGD4'   'TP3'   'S4'
'SRGD5'   'TP3'   'S5'
'SRGD6'   'TP4'   'S6'
'SRGD7'   'TP5'   'S7'
'SRGD8'   'TP6'   'S8'
'SRGD9'   'TP7'   'S9'
'SRGD10'  'TP8'   'S10'
'SRGD11'  'TP9'   'S11'
'SRGD12'  'TP10'  'S12'
'SRGD13'  'TP10'  'S13'
'SRGD14'  'TP11'  'S14'

REPEAT 1 LIST
 14   11   14

GENERATE 18 MEMBERS LIST
'SRGD29'  'TP12'  'S29'
'SRGD30'  'TP13'  'S30'
'SRGD31'  'TP13'  'S31'
'SRGD32'  'TP14'  'S32'
'SRGD33'  'TP14'  'S33'
'SRGD34'  'TP15'  'S34'
'SRGD35'  'TP15'  'S35'
```

```
'SRGD36'  'TP16'  'S36'
'SRGD37'  'TP16'  'S37'
'SRGD38'  'TP17'  'S38'
'SRGD39'  'TP17'  'S39'
'SRGD40'  'TP18'  'S40'
'SRGD41'  'TP18'  'S41'
'SRGD42'  'TP19'  'S42'
'SRGD43'  'TP20'  'S43'
'SRGD44'  'TP21'  'S44'
'SRGD45'  'TP21'  'S45'
'SRGD46'  'TP22'  'S46'

REPEAT 1 LIST
 18   11   18

GENERATE 14 MEMBERS LIST
'SRGD65'  'TP24'  'S65'
'SRGD66'  'TP25'  'S66'
'SRGD67'  'TP25'  'S67'
'SRGD68'  'TP26'  'S68'
'SRGD69'  'TP26'  'S69'
'SRGD70'  'TP27'  'S70'
'SRGD71'  'TP27'  'S71'
'SRGD72'  'TP28'  'S72'
'SRGD73'  'TP28'  'S73'
'SRGD74'  'TP29'  'S74'
'SRGD75'  'TP29'  'S75'
'SRGD76'  'TP30'  'S76'
'SRGD77'  'TP31'  'S77'
'SRGD78'  'TP32'  'S78'

REPEAT 1 LIST
 14   11   14

GENERATE 2 MEMBERS LIST
'SRGD93'   'P102'  'TP17'
'SRGD94'   'P105'  'TP28'

GENERATE 8 MEMBERS LIST
'SRGD95'   'TP4'   'S93'
'SRGD96'   'TP5'   'S94'
'SRGD97'   'TP6'   'S95'
'SRGD98'   'TP7'   'S96'
'SRGD99'   'TP15'  'S97'
'SRGD100'  'TP16'  'S98'
'SRGD101'  'TP17'  'S99'
'SRGD102'  'TP18'  'S100'

GENERATE 3 MEMBERS LIST
'SRGD103'  'SR193' 'SR201'
'SRGD104'  'SR201' 'SR205'
'SRGD105'  'SR205' 'SR197'

REPEAT 3 LIST
3 1 1
6 2 2
9 3 3

$=========================RIGID MEMBERS TO CONNECT TOP PLATE================================
MEMBER INCIDENCES
GENERATE 14 MEMBERS LIST
'PRGD1'   'S1'  'SR1'
'PRGD2'   'S2'  'SR2'
'PRGD3'   'S3'  'SR3'
'PRGD4'   'S4'  'SR4'
'PRGD5'   'S5'  'SR5'
'PRGD6'   'S6'  'SR6'
'PRGD7'   'S7'  'SR7'
'PRGD8'   'S8'  'SR8'
'PRGD9'   'S9'  'SR9'
'PRGD10'  'S10' 'SR10'
'PRGD11'  'S11' 'SR11'
'PRGD12'  'S12' 'SR12'
'PRGD13'  'S13' 'SR13'
'PRGD14'  'S14' 'SR14'

REPEAT 1 LIST
 14   14   14

GENERATE 18 MEMBERS LIST
'PRGD29'  'S29'  'SR29'
'PRGD30'  'S30'  'SR30'
'PRGD31'  'S31'  'SR31'
```

```
'PRGD32'  'S32'  'SR32'
'PRGD33'  'S33'  'SR33'
'PRGD34'  'S34'  'SR34'
'PRGD35'  'S35'  'SR35'
'PRGD36'  'S36'  'SR36'
'PRGD37'  'S37'  'SR37'
'PRGD38'  'S38'  'SR38'
'PRGD39'  'S39'  'SR39'
'PRGD40'  'S40'  'SR40'
'PRGD41'  'S41'  'SR41'
'PRGD42'  'S42'  'SR42'
'PRGD43'  'S43'  'SR43'
'PRGD44'  'S44'  'SR44'
'PRGD45'  'S45'  'SR45'
'PRGD46'  'S46'  'SR46'

REPEAT 1 LIST
 18   18   18

GENERATE 14 MEMBERS LIST
'PRGD65'  'S65'  'SR65'
'PRGD66'  'S66'  'SR66'
'PRGD67'  'S67'  'SR67'
'PRGD68'  'S68'  'SR68'
'PRGD69'  'S69'  'SR69'
'PRGD70'  'S70'  'SR70'
'PRGD71'  'S71'  'SR71'
'PRGD72'  'S72'  'SR72'
'PRGD73'  'S73'  'SR73'
'PRGD74'  'S74'  'SR74'
'PRGD75'  'S75'  'SR75'
'PRGD76'  'S76'  'SR76'
'PRGD77'  'S77'  'SR77'
'PRGD78'  'S78'  'SR78'

REPEAT 1 LIST
 14   14   14

$GENERATE 2 MEMBERS LIST
$'PRGD93'  'SR8'  'SR9'
$'PRGD94'  'S22'  'SR23'

$================================HEX COUPLING MEMBERS==============================
MEMBER INCIDENCES
GENERATE 14 MEMBERS LIST
'HEX1'   'SR1'  'HR1'
'HEX2'   'SR2'  'HR2'
'HEX3'   'SR3'  'HR3'
'HEX4'   'SR4'  'HR4'
'HEX5'   'SR5'  'HR5'
'HEX6'   'SR6'  'HR6'
'HEX7'   'SR7'  'HR7'
'HEX8'   'SR8'  'HR8'
'HEX9'   'SR9'  'HR9'
'HEX10'  'SR10' 'HR10'
'HEX11'  'SR11' 'HR11'
'HEX12'  'SR12' 'HR12'
'HEX13'  'SR13' 'HR13'
'HEX14'  'SR14' 'HR14'

REPEAT 1 LIST
 14   14   14

GENERATE 18 MEMBERS LIST
'HEX29'  'SR29'  'HR29'
'HEX30'  'SR30'  'HR30'
'HEX31'  'SR31'  'HR31'
'HEX32'  'SR32'  'HR32'
'HEX33'  'SR33'  'HR33'
'HEX34'  'SR34'  'HR34'
'HEX35'  'SR35'  'HR35'
'HEX36'  'SR36'  'HR36'
'HEX37'  'SR37'  'HR37'
'HEX38'  'SR38'  'HR38'
'HEX39'  'SR39'  'HR39'
'HEX40'  'SR40'  'HR40'
'HEX41'  'SR41'  'HR41'
'HEX42'  'SR42'  'HR42'
'HEX43'  'SR43'  'HR43'
'HEX44'  'SR44'  'HR44'
'HEX45'  'SR45'  'HR45'
'HEX46'  'SR46'  'HR46'
```

```
REPEAT 1 LIST
 18   18   18

GENERATE 14 MEMBERS LIST
'HEX65'  'SR65'  'HR65'
'HEX66'  'SR66'  'HR66'
'HEX67'  'SR67'  'HR67'
'HEX68'  'SR68'  'HR68'
'HEX69'  'SR69'  'HR69'
'HEX70'  'SR70'  'HR70'
'HEX71'  'SR71'  'HR71'
'HEX72'  'SR72'  'HR72'
'HEX73'  'SR73'  'HR73'
'HEX74'  'SR74'  'HR74'
'HEX75'  'SR75'  'HR75'
'HEX76'  'SR76'  'HR76'
'HEX77'  'SR77'  'HR77'
'HEX78'  'SR78'  'HR78'

REPEAT 1 LIST
 14   14   14

$==============RIGID MEMBERS TO CONNECT HEX COUPLING TO STRAINER============================
MEMBER INCIDENCES
GENERATE 4 MEMBERS LIST
'RGSA1'  'SA1'   'HR1'
'RGSA2'  'SA1'   'HR2'
'RGSA3'  'SA1'   'HR15'
'RGSA4'  'SA1'   'HR16'

REPEAT 2 LIST
 4    1    2
 8    2    4

GENERATE 4 MEMBERS LIST
'RGSA13'  'SA4'   'HR7'
'RGSA14'  'SA4'   'HR8'
'RGSA15'  'SA4'   'HR21'
'RGSA16'  'SA4'   'HR22'

GENERATE 4 MEMBERS LIST
'RGSA17'  'SA5'   'HR9'
'RGSA18'  'SA5'   'HR10'
'RGSA19'  'SA5'   'HR23'
'RGSA20'  'SA5'   'HR24'

REPEAT 2 LIST
 4    1    2
 8    2    4

MEMBER INCIDENCES
GENERATE 4 MEMBERS LIST
'RGSB1'  'SB1'   'HR29'
'RGSB2'  'SB1'   'HR30'
'RGSB3'  'SB1'   'HR47'
'RGSB4'  'SB1'   'HR48'

REPEAT 8 LIST
 4    1    2
 8    2    4
12    3    6
16    4    8
20    5   10
24    6   12
28    7   14
32    8   16

GENERATE 4 MEMBERS LIST
'RGSC1'  'SC1'   'HR65'
'RGSC2'  'SC1'   'HR66'
'RGSC3'  'SC1'   'HR79'
'RGSC4'  'SC1'   'HR80'

REPEAT 6 LIST
 4    1    2
 8    2    4
12    3    6
16    4    8
20    5   10
24    6   12

$==============RIGID MEMBERS FOR STRAINER STICK MODEL========================
MEMBER INCIDENCES
```

```
GENERATE 1 MEMBER LIST
'AA1'  'SA1'  'AA1'
GENERATE 1 MEMBER LIST
'AA2'  'AA1'  'AA2'
REPEAT 3 LIST
1  1  1
2  2  2
3  3  3
GENERATE 4 MEMBERS LIST
'AA11'  'AA1'  'AA101'
'AA12'  'AA1'  'AA102'
'AA13'  'AA1'  'AA103'
'AA14'  'AA1'  'AA104'
REPEAT 4 LIST
10  1   100
20  2   200
30  3   300
40  4   400

GENERATE 1 MEMBER LIST
'AB1'  'SA2'  'AB1'
GENERATE 1 MEMBER LIST
'AB2'  'AB1'  'AB2'
REPEAT 3 LIST
1  1  1
2  2  2
3  3  3
GENERATE 4 MEMBERS LIST
'AB11'  'AB1'  'AB101'
'AB12'  'AB1'  'AB102'
'AB13'  'AB1'  'AB103'
'AB14'  'AB1'  'AB104'
REPEAT 4 LIST
10  1   100
20  2   200
30  3   300
40  4   400

GENERATE 1 MEMBER LIST
'AC1'  'SA3'  'AC1'
GENERATE 1 MEMBER LIST
'AC2'  'AC1'  'AC2'
REPEAT 3 LIST
1  1  1
2  2  2
3  3  3
GENERATE 4 MEMBERS LIST
'AC11'  'AC1'  'AC101'
'AC12'  'AC1'  'AC102'
'AC13'  'AC1'  'AC103'
'AC14'  'AC1'  'AC104'
REPEAT 4 LIST
10  1   100
20  2   200
30  3   300
40  4   400

GENERATE 1 MEMBER LIST
'AE1'  'SA4'  'AE1'
GENERATE 1 MEMBER LIST
'AE2'  'AE1'  'AE2'
REPEAT 3 LIST
1  1  1
2  2  2
3  3  3
GENERATE 4 MEMBERS LIST
'AE11'  'AE1'  'AE101'
'AE12'  'AE1'  'AE102'
'AE13'  'AE1'  'AE103'
'AE14'  'AE1'  'AE104'
REPEAT 4 LIST
10  1   100
20  2   200
30  3   300
40  4   400

GENERATE 1 MEMBER LIST
'AG1'  'SA5'  'AG1'
GENERATE 1 MEMBER LIST
'AG2'  'AG1'  'AG2'
REPEAT 3 LIST
1  1  1
2  2  2
```

```
3  3  3
GENERATE 4 MEMBERS LIST
'AG11'  'AG1'  'AG101'
'AG12'  'AG1'  'AG102'
'AG13'  'AG1'  'AG103'
'AG14'  'AG1'  'AG104'
REPEAT 4 LIST
10  1   100
20  2   200
30  3   300
40  4   400

GENERATE 1 MEMBER LIST
'AH1'  'SA6'  'AH1'
GENERATE 1 MEMBER LIST
'AH2'  'AH1'  'AH2'
REPEAT 3 LIST
1  1  1
2  2  2
3  3  3
GENERATE 4 MEMBERS LIST
'AH11'  'AH1'  'AH101'
'AH12'  'AH1'  'AH102'
'AH13'  'AH1'  'AH103'
'AH14'  'AH1'  'AH104'
REPEAT 4 LIST
10  1   100
20  2   200
30  3   300
40  4   400

GENERATE 1 MEMBER LIST
'AJ1'  'SA7'  'AJ1'
GENERATE 1 MEMBER LIST
'AJ2'  'AJ1'  'AJ2'
REPEAT 3 LIST
1  1  1
2  2  2
3  3  3
GENERATE 4 MEMBERS LIST
'AJ11'  'AJ1'  'AJ101'
'AJ12'  'AJ1'  'AJ102'
'AJ13'  'AJ1'  'AJ103'
'AJ14'  'AJ1'  'AJ104'
REPEAT 4 LIST
10  1   100
20  2   200
30  3   300
40  4   400

GENERATE 1 MEMBER LIST
'BA1'  'SB1'  'BA1'
GENERATE 1 MEMBER LIST
'BA2'  'BA1'  'BA2'
REPEAT 3 LIST
1  1  1
2  2  2
3  3  3
GENERATE 4 MEMBERS LIST
'BA11'  'BA1'  'BA101'
'BA12'  'BA1'  'BA102'
'BA13'  'BA1'  'BA103'
'BA14'  'BA1'  'BA104'
REPEAT 4 LIST
10  1   100
20  2   200
30  3   300
40  4   400

GENERATE 1 MEMBER LIST
'BB1'  'SB2'  'BB1'
GENERATE 1 MEMBER LIST
'BB2'  'BB1'  'BB2'
REPEAT 3 LIST
1  1  1
2  2  2
3  3  3
GENERATE 4 MEMBERS LIST
'BB11'  'BB1'  'BB101'
'BB12'  'BB1'  'BB102'
'BB13'  'BB1'  'BB103'
'BB14'  'BB1'  'BB104'
REPEAT 4 LIST
```

```
10  1   100
20  2   200
30  3   300
40  4   400

GENERATE 1 MEMBER LIST
'BC1'  'SB3'  'BC1'
GENERATE 1 MEMBER LIST
'BC2'  'BC1'  'BC2'
REPEAT 3 LIST
1  1  1
2  2  2
3  3  3
GENERATE 4 MEMBERS LIST
'BC11'  'BC1'  'BC101'
'BC12'  'BC1'  'BC102'
'BC13'  'BC1'  'BC103'
'BC14'  'BC1'  'BC104'
REPEAT 4 LIST
10  1   100
20  2   200
30  3   300
40  4   400

GENERATE 1 MEMBER LIST
'BD1'  'SB4'  'BD1'
GENERATE 1 MEMBER LIST
'BD2'  'BD1'  'BD2'
REPEAT 3 LIST
1  1  1
2  2  2
3  3  3
GENERATE 4 MEMBERS LIST
'BD11'  'BD1'  'BD101'
'BD12'  'BD1'  'BD102'
'BD13'  'BD1'  'BD103'
'BD14'  'BD1'  'BD104'
REPEAT 4 LIST
10  1   100
20  2   200
30  3   300
40  4   400

GENERATE 1 MEMBER LIST
'BE1'  'SB5'  'BE1'
GENERATE 1 MEMBER LIST
'BE2'  'BE1'  'BE2'
REPEAT 2 LIST
1  1  1
2  2  2
GENERATE 4 MEMBERS LIST
'BE11'  'BE1'  'BE101'
'BE12'  'BE1'  'BE102'
'BE13'  'BE1'  'BE103'
'BE14'  'BE1'  'BE104'
REPEAT 3 LIST
10  1   100
20  2   200
30  3   300

GENERATE 1 MEMBER LIST
'BF1'  'SB6'  'BF1'
GENERATE 1 MEMBER LIST
'BF2'  'BF1'  'BF2'
REPEAT 2 LIST
1  1  1
2  2  2
GENERATE 4 MEMBERS LIST
'BF11'  'BF1'  'BF101'
'BF12'  'BF1'  'BF102'
'BF13'  'BF1'  'BF103'
'BF14'  'BF1'  'BF104'
REPEAT 3 LIST
10  1   100
20  2   200
30  3   300

GENERATE 1 MEMBER LIST
'BG1'  'SB7'  'BG1'
GENERATE 1 MEMBER LIST
'BG2'  'BG1'  'BG2'
REPEAT 2 LIST
1  1  1
```

```
2  2  2
GENERATE 4 MEMBERS LIST
'BG11'  'BG1'  'BG101'
'BG12'  'BG1'  'BG102'
'BG13'  'BG1'  'BG103'
'BG14'  'BG1'  'BG104'
REPEAT 3 LIST
10  1   100
20  2   200
30  3   300

GENERATE 1 MEMBER LIST
'BH1'  'SB8'  'BH1'
GENERATE 1 MEMBER LIST
'BH2'  'BH1'  'BH2'
REPEAT 2 LIST
1  1  1
2  2  2
GENERATE 4 MEMBERS LIST
'BH11'  'BH1'  'BH101'
'BH12'  'BH1'  'BH102'
'BH13'  'BH1'  'BH103'
'BH14'  'BH1'  'BH104'
REPEAT 3 LIST
10  1   100
20  2   200
30  3   300

GENERATE 1 MEMBER LIST
'BJ1'  'SB9'  'BJ1'
GENERATE 1 MEMBER LIST
'BJ2'  'BJ1'  'BJ2'
REPEAT 2 LIST
1  1  1
2  2  2
GENERATE 4 MEMBERS LIST
'BJ11'  'BJ1'  'BJ101'
'BJ12'  'BJ1'  'BJ102'
'BJ13'  'BJ1'  'BJ103'
'BJ14'  'BJ1'  'BJ104'
REPEAT 3 LIST
10  1   100
20  2   200
30  3   300

GENERATE 1 MEMBER LIST
'CB1'  'SC1'  'CB1'
GENERATE 1 MEMBER LIST
'CB2'  'CB1'  'CB2'
REPEAT 3 LIST
1  1  1
2  2  2
3  3  3
GENERATE 4 MEMBERS LIST
'CB11'  'CB1'  'CB101'
'CB12'  'CB1'  'CB102'
'CB13'  'CB1'  'CB103'
'CB14'  'CB1'  'CB104'
REPEAT 4 LIST
10  1   100
20  2   200
30  3   300
40  4   400

GENERATE 1 MEMBER LIST
'CC1'  'SC2'  'CC1'
GENERATE 1 MEMBER LIST
'CC2'  'CC1'  'CC2'
REPEAT 3 LIST
1  1  1
2  2  2
3  3  3
GENERATE 4 MEMBERS LIST
'CC11'  'CC1'  'CC101'
'CC12'  'CC1'  'CC102'
'CC13'  'CC1'  'CC103'
'CC14'  'CC1'  'CC104'
REPEAT 4 LIST
10  1   100
20  2   200
30  3   300
40  4   400
```

```
GENERATE 1 MEMBER LIST
'CD1'  'SC3'  'CD1'
GENERATE 1 MEMBER LIST
'CD2'  'CD1'  'CD2'
REPEAT 3 LIST
1  1  1
2  2  2
3  3  3
GENERATE 4 MEMBERS LIST
'CD11'  'CD1'  'CD101'
'CD12'  'CD1'  'CD102'
'CD13'  'CD1'  'CD103'
'CD14'  'CD1'  'CD104'
REPEAT 4 LIST
10  1   100
20  2   200
30  3   300
40  4   400

GENERATE 1 MEMBER LIST
'CE1'  'SC4'  'CE1'
GENERATE 1 MEMBER LIST
'CE2'  'CE1'  'CE2'
REPEAT 2 LIST
1  1  1
2  2  2
GENERATE 4 MEMBERS LIST
'CE11'  'CE1'  'CE101'
'CE12'  'CE1'  'CE102'
'CE13'  'CE1'  'CE103'
'CE14'  'CE1'  'CE104'
REPEAT 3 LIST
10  1   100
20  2   200
30  3   300

GENERATE 1 MEMBER LIST
'CF1'  'SC5'  'CF1'
GENERATE 1 MEMBER LIST
'CF2'  'CF1'  'CF2'
REPEAT 2 LIST
1  1  1
2  2  2
GENERATE 4 MEMBERS LIST
'CF11'  'CF1'  'CF101'
'CF12'  'CF1'  'CF102'
'CF13'  'CF1'  'CF103'
'CF14'  'CF1'  'CF104'
REPEAT 3 LIST
10  1   100
20  2   200
30  3   300

GENERATE 1 MEMBER LIST
'CG1'  'SC6'  'CG1'
GENERATE 1 MEMBER LIST
'CG2'  'CG1'  'CG2'
REPEAT 2 LIST
1  1  1
2  2  2
GENERATE 4 MEMBERS LIST
'CG11'  'CG1'  'CG101'
'CG12'  'CG1'  'CG102'
'CG13'  'CG1'  'CG103'
'CG14'  'CG1'  'CG104'
REPEAT 3 LIST
10  1   100
20  2   200
30  3   300

GENERATE 1 MEMBER LIST
'CH1'  'SC7'  'CH1'
GENERATE 1 MEMBER LIST
'CH2'  'CH1'  'CH2'
REPEAT 2 LIST
1  1  1
2  2  2
GENERATE 4 MEMBERS LIST
'CH11'  'CH1'  'CH101'
'CH12'  'CH1'  'CH102'
'CH13'  'CH1'  'CH103'
'CH14'  'CH1'  'CH104'
REPEAT 3 LIST
```

```
10  1   100
20  2   200
30  3   300

$==========================LOWER DECK PLATE MEMBERS==========================
MEMBER INCIDENCES
GENERATE 3 MEMBERS LIST
'PLATE1'   'BP1'    'BP2'
'PLATE2'   'BP12'   'BP13'
'PLATE3'   'BP23'   'BP24'

GENERATE 4 MEMBERS LIST
'PLATE4'  'BP2'   'BP3'
'PLATE5'  'BP13'  'BP14'
'PLATE6'  'BP24'  'BP25'
'PLATE7'  'BP35'  'BP36'

REPEAT 3 LIST
  4  1   1
  8  2   2
 12  3   3

GENERATE 3 MEMBERS LIST
'PLATE20'  'BP17'   'BP18'
'PLATE21'  'BP28'   'BP29'
'PLATE22'  'BP39'   'BP40'

GENERATE 4 MEMBERS LIST
'PLATE23'  'BP7'   'BP8'
'PLATE24'  'BP18'  'BP19'
'PLATE25'  'BP29'  'BP30'
'PLATE26'  'BP40'  'BP41'

REPEAT 1 LIST
  4    2    2

GENERATE 3 MEMBERS LIST
'PLATE31'   'BP10'   'BP11'
'PLATE32'   'BP21'   'BP22'
'PLATE33'   'BP32'   'BP33'

GENERATE 4 MEMBERS LIST
'PLATE34'  'BP8'   'BP9'
'PLATE35'  'BP19'   'BP20'
'PLATE36'  'BP30'   'BP31'
'PLATE37'  'BP41'   'BP42'

$***********************PLATE USED AS POST*********************************************
GENERATE 8 MEMBERS LIST
'PLATE38'  'P101'   'P102'
'PLATE39'  'P102'   'P103'
'PLATE40'  'P104'   'P105'
'PLATE41'  'P105'   'P106'

$============================PLENUM CHANNEL MEMBERS========================
MEMBER INCIDENCES
GENERATE 1 MEMBERS LIST
'PCHAN1'  'C1'  'C2'
GENERATE 3 MEMBERS LIST
'PCHAN2'  'C2'  'C3'
'PCHAN3'  'C3'  'C4'
'PCHAN4'  'C4'  'C5'

REPEAT 1 LIST
19    16    16

GENERATE 2 MEMBERS LIST
'PCHAN5'  'C5'  'C27'
'PCHAN24' 'C21'  'C22'

GENERATE 4 MEMBERS LIST
'PCHAN9'  'C7'  'C8'
'PCHAN10' 'C8'  'C9'
'PCHAN11' 'C9'  'C10'
'PCHAN12' 'C10' 'C11'

REPEAT 1 LIST
16    15    15

GENERATE 8 MEMBERS LIST
'PCHAN13'  'C12' 'C1'
'PCHAN14'  'C13' 'C11'
'PCHAN15'  'C14' 'C12'
```

```
'PCHAN16'  'C17' 'C13'
'PCHAN17'  'C14' 'C15'
'PCHAN18'  'C16' 'C17'
'PCHAN19'  'C18' 'C15'
'PCHAN20'  'C26' 'C16'

GENERATE 4 MEMBERS LIST
'PCHAN6'  'C27' 'C28'
'PCHAN7'  'C28' 'C29'
'PCHAN8'  'C29' 'C7'
'PCHAN29' 'C27' 'C6'

$============================SUPPORT POST MEMBERS=========================
MEMBER INCIDENCES
GENERATE 5 MEMBERS LIST
'TS1'  'BP13'  'TP13'
'TS2'  'BP14'  'TP14'
'TS3'  'BP15'  'TP15'
'TS4'  'BP16'  'P101'
'TS5'  'P101'  'TP16'

GENERATE 17 MEMBERS LIST
 'TS6'  'BP25'  'TP25'
 'TS7'  'BP26'  'TP26'
 'TS8'  'BP27'  'P104'
 'TS9'  'P104'  'TP27'
'TS10'  'BP29'  'P106'
'TS11'  'P106'  'TP29'
'TS12'  'BP18'  'P103'
'TS13'  'P103'  'TP18'
'TS14'  'BP19'  'TP19'
'TS15'  'BP20'  'TP20'
'TS16'  'BP21'  'TP21'
'TS17'  'BP29'  'TP29'
'TS18'  'BP30'  'TP30'
'TS19'  'BP31'  'TP31'

$========================TOP COVER PLATE MEMBERS==============================
MEMBER INCIDENCES
GENERATE 4 MEMBERS LIST
'TCPL1'   'SR101'  'SR115'
'TCPL2'   'SR102'  'SR116'
'TCPL3'   'SR101'  'SR102'
'TCPL4'   'SR115'  'SR116'

REPEAT 2 LIST
 4   2   2
 8   4   4

GENERATE 2 MEMBERS LIST
'TCPL13'   'SR201'   'SR202'
'TCPL14'   'SR205'   'SR206'

GENERATE 4 MEMBERS LIST
'TCPL15'   'SR107'  'SR121'
'TCPL16'   'SR108'  'SR122'
'TCPL17'   'SR107'  'SR108'
'TCPL18'   'SR121'  'SR122'

GENERATE 1 MEMBERS LIST
'TCPL19'   'SR122'   'SR123'

GENERATE 4 MEMBERS LIST
'TCPL20'   'SR109'  'SR123'
'TCPL21'   'SR110'  'SR124'
'TCPL22'   'SR109'  'SR110'
'TCPL23'   'SR123'  'SR124'

REPEAT 2 LIST
 4   2   2
 8   4   4

GENERATE 4 MEMBERS LIST
'TCPL32'   'SR129'  'SR147'
'TCPL33'   'SR130'  'SR148'
'TCPL34'   'SR129'  'SR130'
'TCPL35'   'SR147'  'SR148'

REPEAT 8 LIST
 4    2    2
 8    4    4
12    6    6
16    8    8
```

```
20   10   10
24   12   12
28   14   14
32   16   16

GENERATE 4 MEMBERS LIST
'TCPL68'   'SR165'  'SR179'
'TCPL69'   'SR166'  'SR180'
'TCPL70'   'SR165'  'SR166'
'TCPL71'   'SR179'  'SR180'

REPEAT 6 LIST
 4    2    2
 8    4    4
12    6    6
16    8    8
20   10   10
24   12   12

GENERATE 1 MEMBERS LIST
'TCPL96'   'SR115'   'SR129'

REPEAT 5 LIST
  1    1    1
  2    2    2
  3    3    3
  4    4    4
  5    5    5

GENERATE 2 MEMBERS LIST
'TCPL102'   'SR121'   'SR137'
'TCPL103'   'SR122'   'SR138'

GENERATE 1 MEMBERS LIST
'TCPL104'   'SR123'   'SR141'

REPEAT 5 LIST
  1    1    1
  2    2    2
  3    3    3
  4    4    4
  5    5    5

GENERATE 1 MEMBERS LIST
'TCPL110'   'SR149'   'SR165'

REPEAT 13 LIST
  1    1    1
  2    2    2
  3    3    3
  4    4    4
  5    5    5
  6    6    6
  7    7    7
  8    8    8
  9    9    9
 10   10   10
 11   11   11
 12   12   12
 13   13   13

GENERATE 2 MEMBERS LIST
'TCPL124'  'SR203'  'SR204'
'TCPL125'  'SR207'  'SR208'

$=========TOP PLATES BETWEEN DOUBLE BEAM========
GENERATE 6 MEMBERS LIST
'TCPL126'  'SR110'  'SR111'
'TCPL127'  'SR124'  'SR125'
'TCPL128'  'SR142'  'SR143'
'TCPL129'  'SR160'  'SR161'
'TCPL130'  'SR176'  'SR177'
'TCPL131'  'SR190'  'SR191'

$
$*******************************************************************
$
STATUS SUPPORT 'WA1' TO 'WA5' 'WA7' TO 'WA16' -
               'WA18' TO 'WA33' 'WA35' TO 'WA43' 'TC27' TO 'TC29'

DELETIONS
MEM 'BEAM13' 'PLATE17' 'PLATE20' 'TCPL19'
JOINT 'BP17' 'P14'
```

```
ADDITIONS

$*********************************************************************
$
JOINT TIES
'SR101' TO 'SR200' EQUALS 'S1' TO 'S100'

SLAVE RELEASES
'SR101' TO 'SR196' MOM X Y Z
'SR197' TO 'SR200' MOM X Y

$=======================MATERIAL PROPERTIES=========================
DEFINE GROUP 'BEAM'    MEM 'BEAM1'  TO 'BEAM12' 'BEAM14' TO 'BEAM29'
DEFINE GROUP 'PCHAN'  MEM 'PCHAN1' TO 'PCHAN29'
DEFINE GROUP 'TS'     MEM 'TS1' TO 'TS19'
DEFINE GROUP 'PLATE1' MEM 'PLATE1' 'PLATE3' 'PLATE4' TO 'PLATE16' BY 4 'PLATE23' TO 'PLATE31' BY 4 -
                          'PLATE7' TO 'PLATE19' BY 4 'PLATE22' TO 'PLATE30' BY 4 'PLATE33' -
                          'PLATE34' 'PLATE37'
DEFINE GROUP 'PLATE2' MEM 'PLATE2' TO 'PLATE18' BY 4 'PLATE24' TO 'PLATE32' BY 4 -
                          'PLATE5' TO 'PLATE13' BY 4 'PLATE21' TO 'PLATE29' BY 4 'PLATE35' 'PLATE36'
DEFINE GROUP 'PLATE3' MEM 'PLATE38' TO 'PLATE41'
DEFINE GROUP 'TCPLAT' MEM 'TCPL1' TO 'TCPL12' 'TCPL15' TO 'TCPL18' 'TCPL20' TO 'TCPL95'
DEFINE GROUP 'TCPLAT1' MEM 'TCPL96' TO 'TCPL123'
DEFINE GROUP 'TCPLAT2' MEM 'TCPL13' 'TCPL14' 'TCPL124' TO 'TCPL131'
DEFINE GROUP 'HEX'    MEM 'HEX1' TO 'HEX92'
DEFINE GROUP 'RGS'    MEM 'RGSA1' TO 'RGSA28' 'RGSB1' TO 'RGSB36' 'RGSC1' TO 'RGSC28'

$RIGID LINKS CONNECTING CHANNELS TO BEAMS ALONG X-SIDE, Z-SIDE, AND CORNERS
DEFINE GROUP 'RIGCBX' MEM 'RIGD112' TO 'RIGD120' 'RIGD129' TO 'RIGD135'
DEFINE GROUP 'RIGCBZ' MEM 'RIGD122' 'RIGD123'
DEFINE GROUP 'RIGCBC' MEM 'RIGD111' 'RIGD121' 'RIGD124' TO 'RIGD128' 'RIGD136'
DEFINE GROUP 'RIGCB'  GROUPS 'RIGCBX' 'RIGCBZ' 'RIGCBC'

$RIGID LINKS CONNECTING CHANNELS TO TOP PLATE ALONG X-SIDE, Z-SIDE, AND CORNERS
DEFINE GROUP 'RIGCTX' MEM 'RIGD138' TO 'RIGD146' 'RIGD155' TO 'RIGD161'
DEFINE GROUP 'RIGCTZ' MEM 'RIGD148' 'RIGD149'
DEFINE GROUP 'RIGCTC' MEM 'RIGD137' 'RIGD147' 'RIGD150' TO 'RIGD154' 'RIGD162'
DEFINE GROUP 'RIGCT'  GROUPS 'RIGCTX' 'RIGCTZ' 'RIGCTC'

DEFINE GROUP 'RIGB'   MEM 'RIGD77' TO 'RIGD110' 'RIGD163' TO 'RIGD168' 'RIGD182' TO 'RIGD184'
DEFINE GROUP 'RIGD'   GROUPS 'RIGCB' 'RIGCT' 'RIGB'

$RIGID LINKS REPRESENTING FLOOR BEAM WEBS, EXTERIOR AND INTERIOR WEBS

DEFINE GROUP 'RIGWE2' MEM 'RIGD1' 'RIGD4' TO 'RIGD16' BY 4 'RIGD24' 'RIGD32' 'RIGD36' 'RIGD17' 'RIGD18' -
                          'RIGD3' TO 'RIGD19' BY 4 'RIGD27' 'RIGD35' 'RIGD38' -
                          'RIGD39' 'RIGD42' TO 'RIGD74' BY 4 -
                          'RIGD41' TO 'RIGD73' BY 4 'RIGD76' 'RIGD189' 'RIGD55'
DEFINE GROUP 'RIGWE4' MEM 'RIGD20' 'RIGD23' 'RIGD28' 'RIGD31' 'RIGD56' 'RIGD187'
DEFINE GROUP 'RIGWI2' MEM 'RIGD2' TO 'RIGD14' BY 4 'RIGD5' 'RIGD9' 'RIGD13' 'RIGD33' 'RIGD34' -
                          'RIGD37' 'RIGD40' 'RIGD44' 'RIGD75' 'RIGD72'
DEFINE GROUP 'RIGWI4' MEM 'RIGD43' TO 'RIGD51' BY 4 'RIGD48' 'RIGD52' 'RIGD60' TO 'RIGD68' BY 4 -
                          'RIGD59' TO 'RIGD71' BY 4 'RIGD21' 'RIGD22' 'RIGD25' 'RIGD26' 'RIGD29' 'RIGD30'
DEFINE GROUP 'RIGWES' MEM 'RIGD186' 'RIGD188'
DEFINE GROUP 'WEB'  GROUPS 'RIGWI2' 'RIGWI4' 'RIGWE2' 'RIGWE4' 'RIGWES'

DEFINE GROUP  'SRGD'   MEM 'SRGD1' TO 'SRGD102' 'PRGD1' TO 'PRGD92'
DEFINE GROUP  'SRGD2'  MEM 'SRGD103' TO 'SRGD114'
DEFINE GROUP  'LINKS'  GROUPS 'RGS' 'RIGD' 'WEB' 'SRGD' 'SRGD2'

$STRAINER MODULE GROUPS
DEFINE GROUP 'STNRD7P' MEM 'AA2' 'AB2' 'AC2' 'AE2' 'AG2' 'AH2' 'AJ2' 'BA2' 'BB2' 'BC2' 'BD2' -
                           'BE2' 'BF2' 'BG2' 'BH2' 'BJ2' 'CB2' 'CC2' 'CD2' 'CE2' 'CF2' 'CG2' 'CH2'
DEFINE GROUP 'STNRD7F' MEM 'BE3' 'BE4' 'BF3' 'BF4' 'BG3' 'BG4' 'BH3' 'BH4' 'BJ3' 'BJ4' -
                           'CE3' 'CE4' 'CF3' 'CF4' 'CG3' 'CG4' 'CH3' 'CH4'
DEFINE GROUP 'STNRD7' GROUPS 'STNRD7P' 'STNRD7F'
DEFINE GROUP 'STNRD6F' MEM 'AA3' TO 'AA5' 'AB3' TO 'AB5' 'AC3' TO 'AC5' 'AE3' TO 'AE5' 'AG3' TO 'AG5' -
                           'AH3' TO 'AH5' 'AJ3' TO 'AJ5' 'BA3' TO 'BA5' 'BB3' TO 'BB5' 'BC3' TO 'BC5' -
                           'BD3' TO 'BD5' 'CB3' TO 'CB5' 'CC3' TO 'CC5' 'CD3' TO 'CD5'

DEFINE GROUP 'MODULE' MEM 'AA1' 'AA11' TO 'AA14' 'AA21' TO 'AA24' 'AA31' TO 'AA34' 'AA41' TO 'AA44' 'AA51' TO
'AA54' -
                          'AB1' 'AB11' TO 'AB14' 'AB21' TO 'AB24' 'AB31' TO 'AB34' 'AB41' TO 'AB44' 'AB51' TO
'AB54' -
                          'AC1' 'AC11' TO 'AC14' 'AC21' TO 'AC24' 'AC31' TO 'AC34' 'AC41' TO 'AC44' 'AC51' TO
'AC54' -
                          'AE1' 'AE11' TO 'AE14' 'AE21' TO 'AE24' 'AE31' TO 'AE34' 'AE41' TO 'AE44' 'AE51' TO
'AE54' -
                          'AG1' 'AG11' TO 'AG14' 'AG21' TO 'AG24' 'AG31' TO 'AG34' 'AG41' TO 'AG44' 'AG51' TO
'AG54' -
                          'AH1' 'AH11' TO 'AH14' 'AH21' TO 'AH24' 'AH31' TO 'AH34' 'AH41' TO 'AH44' 'AH51' TO
'AH54' -
                          'AJ1' 'AJ11' TO 'AJ14' 'AJ21' TO 'AJ24' 'AJ31' TO 'AJ34' 'AJ41' TO 'AJ44' 'AJ51' TO
```

```
'AJ54' -

                          'BA1' 'BA11' TO 'BA14' 'BA21' TO 'BA24' 'BA31' TO 'BA34' 'BA41' TO 'BA44' 'BA51' TO
'BA54' -
                          'BB1' 'BB11' TO 'BB14' 'BB21' TO 'BB24' 'BB31' TO 'BB34' 'BB41' TO 'BB44' 'BB51' TO
'BB54' -
                          'BC1' 'BC11' TO 'BC14' 'BC21' TO 'BC24' 'BC31' TO 'BC34' 'BC41' TO 'BC44' 'BC51' TO
'BC54' -
                          'BD1' 'BD11' TO 'BD14' 'BD21' TO 'BD24' 'BD31' TO 'BD34' 'BD41' TO 'BD44' 'BD51' TO
'BD54' -
                          'BE1' 'BE11' TO 'BE14' 'BE21' TO 'BE24' 'BE31' TO 'BE34' 'BE41' TO 'BE44' -
                          'BF1' 'BF11' TO 'BF14' 'BF21' TO 'BF24' 'BF31' TO 'BF34' 'BF41' TO 'BF44' -
                          'BG1' 'BG11' TO 'BG14' 'BG21' TO 'BG24' 'BG31' TO 'BG34' 'BG41' TO 'BG44' -
                          'BH1' 'BH11' TO 'BH14' 'BH21' TO 'BH24' 'BH31' TO 'BH34' 'BH41' TO 'BH44' -
                          'BJ1' 'BJ11' TO 'BJ14' 'BJ21' TO 'BJ24' 'BJ31' TO 'BJ34' 'BJ41' TO 'BJ44' -

                          'CB1' 'CB11' TO 'CB14' 'CB21' TO 'CB24' 'CB31' TO 'CB34' 'CB41' TO 'CB44' 'CB51' TO
'CB54' -
                          'CC1' 'CC11' TO 'CC14' 'CC21' TO 'CC24' 'CC31' TO 'CC34' 'CC41' TO 'CC44' 'CC51' TO
'CC54' -
                          'CD1' 'CD11' TO 'CD14' 'CD21' TO 'CD24' 'CD31' TO 'CD34' 'CD41' TO 'CD44' 'CD51' TO
'CD54' -
                          'CE1' 'CE11' TO 'CE14' 'CE21' TO 'CE24' 'CE31' TO 'CE34' 'CE41' TO 'CE44' -
                          'CF1' 'CF11' TO 'CF14' 'CF21' TO 'CF24' 'CF31' TO 'CF34' 'CF41' TO 'CF44' -
                          'CG1' 'CG11' TO 'CG14' 'CG21' TO 'CG24' 'CG31' TO 'CG34' 'CG41' TO 'CG44' -
                          'CH1' 'CH11' TO 'CH14' 'CH21' TO 'CH24' 'CH31' TO 'CH34' 'CH41' TO 'CH44'

DEFINE GROUP 'DISPJT' JOINTS -
'AA101' TO 'AA104' 'AB101' TO 'AB104' 'AC101' TO 'AC104' 'AE101' TO 'AE104' -
'AG101' TO 'AG104' 'AH101' TO 'AH104' 'AJ101' TO 'AJ104' 'BA101' TO 'BA104' -
'BB101' TO 'BB104' 'BC101' TO 'BC104' 'BD101' TO 'BD104' 'CB101' TO 'CB104' -
'CC101' TO 'CC104' 'CD101' TO 'CD104' -

'AA501' TO 'AA504' 'AB501' TO 'AB504' 'AC501' TO 'AC504' 'AE501' TO 'AE504' -
'AG501' TO 'AG504' 'AH501' TO 'AH504' 'AJ501' TO 'AJ504' 'BA501' TO 'BA504' -
'BB501' TO 'BB504' 'BC501' TO 'BC504' 'BD501' TO 'BD504' 'CB501' TO 'CB504' -
'CC501' TO 'CC504' 'CD501' TO 'CD504' -

'AA201' TO 'AA204' 'AB201' TO 'AB204' 'AC201' TO 'AC204' 'AE201' TO 'AE204' -
'AG201' TO 'AG204' 'AH201' TO 'AH204' 'AJ201' TO 'AJ204' 'BA201' TO 'BA204' -
'BB201' TO 'BB204' 'BC201' TO 'BC204' 'BD201' TO 'BD204' 'CB201' TO 'CB204' -
'CC201' TO 'CC204' 'CD201' TO 'CD204' -

'AA301' TO 'AA304' 'AB301' TO 'AB304' 'AC301' TO 'AC304' 'AE301' TO 'AE304' -
'AG301' TO 'AG304' 'AH301' TO 'AH304' 'AJ301' TO 'AJ304' 'AA401' TO 'AA404' -
'AB401' TO 'AB404' 'AC401' TO 'AC404' 'AE401' TO 'AE404' 'AG401' TO 'AG404' -
'AH401' TO 'AH404' 'AJ401' TO 'AJ404' 'BA301' TO 'BA304' 'BB301' TO 'BB304' -
'BC301' TO 'BC304' 'BD301' TO 'BD304' 'BA401' TO 'BA404' 'BB401' TO 'BB404' -
'BC401' TO 'BC404' 'BD401' TO 'BD404' 'CB301' TO 'CB304' 'CC301' TO 'CC304' -
'CD301' TO 'CD304' 'CB401' TO 'CB404' 'CC401' TO 'CC404' 'CD401' TO 'CD404' -

'BE101' TO 'BE104' 'BF101' TO 'BF104' 'BG101' TO 'BG104' 'BH101' TO 'BH104' -
'BJ101' TO 'BJ104' 'CE101' TO 'CE104' 'CF101' TO 'CF104' 'CG101' TO 'CG104' -
'CH101' TO 'CH104' 'BE401' TO 'BE404' 'BF401' TO 'BF404' 'BG401' TO 'BG404' -
'BH401' TO 'BH404' 'BJ401' TO 'BJ404' 'CE401' TO 'CE404' 'CF401' TO 'CF404' -
'CG401' TO 'CG404' 'CH401' TO 'CH404' -

'BE201' TO 'BE204' 'BF201' TO 'BF204' 'BG201' TO 'BG204' 'BH201' TO 'BH204' -
'BJ201' TO 'BJ204' 'CE201' TO 'CE204' 'CF201' TO 'CF204' 'CG201' TO 'CG204' -
'CH201' TO 'CH204' 'BE301' TO 'BE304' 'BF301' TO 'BF304' 'BG301' TO 'BG304' -
'BH301' TO 'BH304' 'BJ301' TO 'BJ304' 'CE301' TO 'CE304' 'CF301' TO 'CF304' -
'CG301' TO 'CG304' 'CH301' TO 'CH304'

DEFINE GROUP 'TCPA'        GROUPS 'TCPLAT' 'TCPLAT1' 'TCPLAT2'
DEFINE GROUP 'CODEBEAM'    GROUPS 'PCHAN' 'PLATE1' 'PLATE2' 'PLATE3' 'TCPA'
DEFINE GROUP 'CODECOL'     GROUPS 'BEAM' 'TS' 'HEX' 'WEB'
DEFINE GROUP 'CODEMEM'     GROUPS 'CODEBEAM' 'CODECOL'
DEFINE GROUP 'WEIGHT'      GROUPS 'PCHAN' 'PLATE1' 'PLATE2' 'PLATE3' 'TCPA' 'BEAM' 'TS' 'HEX'
DEFINE GROUP 'RECT'        GROUPS 'PLATE1' 'PLATE2' 'PLATE3' 'WEB' 'TCPA'
DEFINE GROUP 'REACMEM'     GROUPS 'BEAM' 'PCHAN' 'TS' 'PLATE1' 'PLATE2' 'PLATE3' 'TCPLAT' -
                                  'TCPLAT1' 'TCPLAT2' 'HEX' 'RGS' 'RIGD' 'WEB' 'STNRD6F' 'STNRD7'
$
$================================ DEFINE GROUPS FOR VIEWING===================================
$
DEFINE GROUP 'STR'         GROUPS 'STNRD6F' 'STNRD7' 'MODULE' 'SRGD' 'RGS'
DEFINE GROUP 'TCP'         GROUPS 'TCPLAT' 'TCPLAT1'
DEFINE GROUP 'LD'          GROUPS 'PLATE1' 'PLATE2'
DEFINE GROUP 'NOSTR'       GROUPS 'BEAM' 'PCHAN' 'TS' 'PLATE1' 'PLATE2' 'PLATE3' 'TCPLAT' 'TCPLAT1' 'TCPLAT2' -
                          'HEX' 'RIGD' 'SRGD'
DEFINE GROUP 'NOTOP'       GROUPS 'BEAM' 'PCHAN' 'TS' 'PLATE1' 'PLATE2' 'PLATE3' -
                          'RIGD'
DEFINE GROUP 'BOX'         GROUPS 'BEAM' 'PCHAN' 'TS' 'RIGD' 'WEB' 'PLATE3'
DEFINE GROUP 'ALLBUT'      GROUPS 'BEAM' 'PCHAN' 'TS' 'PLATE1' 'PLATE2' 'PLATE3' 'TCPLAT' 'TCPLAT1' 'TCPLAT2' -
```

```
                                'HEX' 'RIGD' 'WEB' 'SRGD' 'RGS'
DEFINE GROUP 'NOWEB'            GROUPS 'BEAM' 'PCHAN' 'TS' 'PLATE1' 'PLATE2' 'PLATE3' 'TCPLAT' 'TCPLAT1' 'TCPLAT2' -
                                'HEX' 'RIGD' 'SRGD' 'RGS' 'STR'

$
$==========================================================================================

MEMBER ECCENTRICITIES
'TCPL1' 'TCPL5' 'TCPL9' 'TCPL15' 'TCPL20' 'TCPL24' 'TCPL28'          GLOBAL START X  5.0  END X  5.0
'TCPL32' TO 'TCPL92' BY 4                                            GLOBAL START X  5.0  END X  5.0
'TCPL3' 'TCPL7' 'TCPL11' 'TCPL17' 'TCPL22' TO 'TCPL94' BY 4          GLOBAL START Z -5.0  END Z -5.0
'TCPL4' TO 'TCPL12' BY 4 'TCPL18'                                    GLOBAL START Z  5.0  END Z  5.0
'TCPL23' TO 'TCPL31' BY 4 'TCPL35' TO 'TCPL95' BY 4                  GLOBAL START Z  5.0  END Z  5.0
'TCPL2' 'TCPL6' 'TCPL10' 'TCPL16' 'TCPL21' TO 'TCPL93' BY 4          GLOBAL START X -5.0  END X -5.0
'TCPL126' 'TCPL128' 'TCPL130'                                        GLOBAL START Z -6.375 END Z -6.375
'TCPL127' 'TCPL129' 'TCPL131'                                        GLOBAL START Z  6.375 END Z  6.375
'TCPL97' TO 'TCPL123' BY 2                                           GLOBAL START X -5.0  END X -5.0
'TCPL96' TO 'TCPL122' BY 2                                           GLOBAL START X  5.0  END X  5.0

'PLATE3' 'PLATE33' 'PLATE37' 'PLATE7' TO 'PLATE19' BY 4 'PLATE22' TO 'PLATE30' -
          BY 4 GLOBAL START Z  8.0 END Z  8.0
'PLATE1' 'PLATE4' TO 'PLATE16' BY 4 'PLATE23' TO 'PLATE31' BY 4 'PLATE34' -
          GLOBAL START Z -8.0 END Z -8.0

$*************************************************************************
MATERIAL STEEL
CONSTANTS
E 27650000      MEM ALL
G 10600000      MEM ALL
CTE 3.27E-6     MEM ALL
DENSITY 0.290   MEM ALL
DENSITY 0.336   GROUP 'PLATE1' GROUP 'PLATE2'
DENSITY 0.218   GROUP 'TCPA'
POISSON 0.305   MEM ALL
DENSITY 0.0000001 GROUP 'MODULE' GROUP 'STNRD6F' GROUP 'STNRD7' GROUP 'LINKS'
BETA  90.0 'PLATE1' TO 'PLATE16' 'PLATE18' 'PLATE19' 'PLATE21' TO 'PLATE37' -
           'TCPL1' TO 'TCPL18' 'TCPL20' TO 'TCPL131'
BETA 180.0 'PCHAN1' TO 'PCHAN13' 'PCHAN15' 'PCHAN19' 'PCHAN29'
BETA  45.0 'TS1' TO 'TS19'
BETA 90 GROUP 'WEB'
$
$==================================DEFINE MEMBER PROPERTIES============================
MEMBER PROPERTIES
GROUP 'BEAM'  TABLE 'STEEL78' 'W6X15'
GROUP 'TS' TABLE 'TUBE80' 'TS3X3X5'
GROUP 'PCHAN'   TABLE 'MYCHAN' 'C12X325'
GROUP 'PLATE1'  TABLE 'RBARS'  'B1600008'
GROUP 'PLATE2'  TABLE 'RBARS'  'B3200008'
GROUP 'PLATE3'  TABLE 'RBAR'   'B0900012'
GROUP 'TCPLAT'  TABLE 'RBARS'  'B1304008'
GROUP 'TCPLAT1' TABLE 'RBARS'  'B1304008'
GROUP 'TCPLAT2' TABLE 'RBARS'  'B1600008'
GROUP 'HEX'  PIPE OD 1.15625 ID 0.5
GROUP 'RIGWE2' TABLE 'MYW' 'W1600003'
GROUP 'RIGWI2' TABLE 'MYW' 'W3200003'
GROUP 'RIGWE4' TABLE 'MYW' 'W1600003'
GROUP 'RIGWI4' TABLE 'MYW' 'W3200003'
GROUP 'RIGWES' TABLE 'MYW' 'W1100003'
GROUP 'MODULE' GROUP 'RIGD' GROUP 'SRGD' AX 100. AY 100. AZ 100. IX 1000. IY 1000. IZ 1000.
GROUP 'RGS' AX 5. AY 5. AZ 5. IX 100. IY 100. IZ 100.
GROUP 'SRGD2' AX 6. AY 4.24 AZ 4.24 IX 1000. IY 1000. IZ 1000.
$
UNITS RADIANS

MEMBER PROPERTIES
GROUP 'STNRD7P' STIFFNESS MATRIX COLUMN 1 2 3 4 5 6
  ROW 1  1.75E4   0.       0.       0.       0.       0.
  ROW 2  0.       9.18E3   0.       0.       0.      -4.20E4
  ROW 3  0.       0.       9.18E3   0.       4.20E4   0.
  ROW 4  0.       0.       0.       1.14E6   0.       0.
  ROW 5  0.       0.       4.20E4   0.       5.27E6   0.
  ROW 6  0.      -4.20E4   0.       0.       0.       5.27E6

MEMBER PROPERTIES
GROUP 'STNRD6F' STIFFNESS MATRIX COLUMN 1 2 3 4 5 6
  ROW 1  2.1E4    0.       0.       0.       0.       0.
  ROW 2  0.       1.11E4   0.       0.       0.      -1.10E5
  ROW 3  0.       0.       1.11E4   0.       1.10E5   0.
  ROW 4  0.       0.       0.       1.76E6   0.       0.
  ROW 5  0.       0.       1.10E5   0.       1.28E7   0.
  ROW 6  0.     -1.10E5    0.       0.       0.       1.28E7

MEMBER PROPERTIES
```

```
GROUP 'STNRD7F' STIFFNESS MATRIX COLUMN 1 2 3 4 5 6
  ROW 1  2.1E4    0.       0.       0.       0.       0.
  ROW 2  0.       9.74E3   0.       0.       0.      -1.08E5
  ROW 3  0.       0.       9.74E3   0.       1.08E5    0.
  ROW 4  0.       0.       0.       1.75E6   0.        0.
  ROW 5  0.       0.       1.08E5   0.       1.42E7    0.
  ROW 6  0.      -1.08E5   0.       0.       0.       1.42E7

$==============================================================================
MEMBER RELEASES
'HEX1' TO 'HEX92'   END MOM X Y Z
'PCHAN2' 'PCHAN13' 'PCHAN14' 'PCHAN19' 'PCHAN20' 'PCHAN25' 'PCHAN28' END MOM  Y Z
'PCHAN15' 'PCHAN16' 'PCHAN21' 'PCHAN23' STA MOM  Y Z
'PCHAN11' STA MOM  Y Z
'PCHAN6' STA MOM Y
'PCHAN8' END MOM Y
GROUP 'RIGWI2' END ELA KMY 1.6E6
GROUP 'RIGWI4' END ELA KMY 2.3E6
GROUP 'RIGWE2' END ELA KMY 1.2E6
GROUP 'RIGWE4' END ELA KMY 1.9E6
GROUP 'PLATE1' GROUP 'PLATE2' STA MOM Y END MOM Y
'PLATE38' 'PLATE40' STA MOM Y Z
'PLATE39' 'PLATE41' END MOM Y Z
GROUP 'RIGCBX'  STA MOM Y
GROUP 'RIGCBZ'  STA MOM Z
GROUP 'RIGCBC'  STA MOM Y Z
'TCPL13' 'TCPL14' 'TCPL124' 'TCPL125' STA MOM Y END MOM Y
$
$==============================================================================
JOINT RELEASES
$
'TC27' TO 'TC29' FOR X Z MOM X Y Z
'WA1' TO 'WA5' 'WA10' TO 'WA16' 'WA21' TO 'WA22' -
'WA35' TO 'WA38' 'WA43' FOR X Z MOM X Y
'WA23' TO 'WA27' 'WA32' 'WA33' FOR X MOM X Y
'WA28' TO 'WA31' MOM X Y
'WA7' TO 'WA9' 'WA18' TO 'WA20' 'WA39' TO 'WA42' FOR Z MOM X Y
$
$==============================================================================
UNITS DEGREES
PRINT MEM PROP MEM 'PCHAN1' 'PLATE1' 'PLATE2' 'TCPL1' 'TCPL96' 'TCPL13' 'HEX1' 'RIGD1' 'RIGD2'
$
$==========================DEFINE STATIC LOADING==========================================
$
DEAD LOADING 'XSTEEL' DIR  X FACTOR 1.0  GROUP 'WEIGHT'
DEAD LOADING 'YSTEEL' DIR -Y FACTOR 1.0  GROUP 'WEIGHT'
DEAD LOADING 'ZSTEEL' DIR  Z FACTOR 1.0  GROUP 'WEIGHT'
$
LOADING 'YMODULE'
JOINT LOADS
'AA1' 'AB1' 'AC1' 'AE1' 'AG1' 'AH1' 'AJ1'              FORCE Y -826.0
'BA1' 'BB1' 'BC1' 'BD1' 'CB1' 'CC1' 'CD1'              FORCE Y -826.0
'BE1' 'BF1' 'BG1' 'BH1' 'BJ1' 'CE1' 'CF1' 'CG1' 'CH1'  FORCE Y -685.0

LOADING 'PRESSURE'
MEMBER LOADS
'PCHAN1' TO 'PCHAN5' 'PCHAN9' TO 'PCHAN12' FOR Z GLOBAL UNI W -18.2
'PCHAN13' 'PCHAN15' 'PCHAN19'              FOR X GLOBAL UNI W  18.2
'PCHAN14' 'PCHAN16' 'PCHAN20'              FOR X GLOBAL UNI W -18.2
'PCHAN17' 'PCHAN18' 'PCHAN21' TO 'PCHAN28' FOR Z GLOBAL UNI W  18.2
'PCHAN6' TO 'PCHAN8'                       FOR Z        UNI W  18.2
'PCHAN6' TO 'PCHAN8'                       FOR Y GLOBAL UNI W -24.0
GROUP 'TCPLAT' GROUP 'TCPLAT1'             FOR Y GLOBAL UNI W -20.1
GROUP 'TCPLAT2'                            FOR Y GLOBAL UNI W -24.3
GROUP 'PLATE1'                             FOR Y GLOBAL UNI W  24.3
GROUP 'PLATE2'                             FOR Y GLOBAL UNI W  48.5

JOINT LOADS
'AA1' 'AB1' 'AC1' 'AE1' 'AG1' 'AH1' 'AJ1'              FORCE Y -46.0
'BA1' 'BB1' 'BC1' 'BD1' 'CB1' 'CC1' 'CD1'              FORCE Y -46.0
'BE1' 'BF1' 'BG1' 'BH1' 'BJ1' 'CE1' 'CF1' 'CG1' 'CH1'  FORCE Y -46.0

LOADING 'DEB'
JOINT LOADS
'AA5' 'AB5' 'AC5' 'AE5' 'AG5' 'AH5' 'AJ5'              FORCE Y -1080.0
'BA5' 'BB5' 'BC5' 'BD5' 'CB5' 'CC5' 'CD5'              FORCE Y -909.0
'BE4' 'BF4' 'BG4' 'BH4' 'BJ4' 'CE4' 'CF4' 'CG4' 'CH4'  FORCE Y -909.0
$
INACTIVE MEM GROUP 'STNRD6F' GROUP 'STNRD7'
$
LOADING 'TOL'
MEMBER TEMPERATURE LOADS
EXIS ACT AXIAL 70.0
```

```
$
CONSTANTS
CTE 6.02E-6    MEM ALL
LOADING 'TAL'
MEMBER TEMPERATURE LOADS
EXIS ACT AXIAL 120.0
$
LOADING 'STIFFX'
JOINT LOADS
'AA1' 'AB1' 'AC1' 'AE1' 'AG1' 'AH1' 'AJ1' 'BA1' 'BB1' 'BC1' 'BD1' 'CB1' 'CC1' 'CD1' -
'BE1' 'BF1' 'BG1' 'BH1' 'BJ1' 'CE1' 'CF1' 'CG1' 'CH1'  FORCE X 1000.0
$
LOADING 'STIFFZ'
JOINT LOADS
'AA1' 'AB1' 'AC1' 'AE1' 'AG1' 'AH1' 'AJ1' 'BA1' 'BB1' 'BC1' 'BD1' 'CB1' 'CC1' 'CD1' -
'BE1' 'BF1' 'BG1' 'BH1' 'BJ1' 'CE1' 'CF1' 'CG1' 'CH1'  FORCE Z 1000.0
$
LOADING 'BEY'
JOINT LOADS
'BE1' FORCE Y -1000.0
$
LOADING 'AEY'
JOINT LOADS
'BE1' FORCE Y -1000.0
$
LOADING 'AEY1'
JOINT LOADS
'SR7' FORCE Y -250.0
$
LOADING 'AEY2'
JOINT LOADS
'SR8' FORCE Y -250.0
$
LOADING 'AEY3'
JOINT LOADS
'SR21' FORCE Y -250.0
$
LOADING 'AEY4'
JOINT LOADS
'SR22' FORCE Y -250.0
ACTIVE MEM ALL
$
OUTPUT BY LOADING
OUTPUT WAR MES LIM 1
$
LOAD LIST 'XSTEEL' 'YSTEEL' 'ZSTEEL' 'YMODULE' 'PRESSURE' 'TOL' 'TAL' 'STIFFX' 'STIFFZ' -
 'BEY' 'AEY' 'AEY1' 'AEY2' 'AEY3' 'AEY4' 'DEB'
STIFFNESS ANALYSIS
OUTPUT DECIMAL 6
OUTPUT BY JOINT
LOAD LIST 'STIFFX' 'STIFFZ' 'BEY' 'AEY' 'AEY1' 'AEY2' 'AEY3' 'AEY4'
LIST DISPL JOINTS 'AA1' 'AB1' 'AC1' 'AE1' 'AG1' 'AH1' 'AJ1' 'BA1' 'BB1' 'BC1' 'BD1' 'CB1' 'CC1' 'CD1' -
'BE1' 'BF1' 'BG1' 'BH1' 'BJ1' 'CE1' 'CF1' 'CG1' 'CH1' 'SR7' 'SR8' 'SR21' 'SR22'

$
$================================DEFINE DYNAMIC LOADING========================
$
UNITS CYCLES SECONDS
$
DELETE RESPONSE SPECTRUM 'OBEH'
DELETE RESPONSE SPECTRUM 'OBEV'
DELETE RESPONSE SPECTRUM 'SSEH'
DELETE RESPONSE SPECTRUM 'SSEV'

$*********************************************************
STORE RESPONSE SPECTRA ACCELERATION LINEAR VS FREQUENCY LOG 'OBEH'
DAMPING RATIO 0.02 FACTOR 386.08

0.0316  0.182          0.0415  0.220          0.0528  0.273          0.0716  0.330
0.0811  0.364          0.0999  0.440          0.1031  0.455          0.1512  0.546
0.1514  0.550          0.1545  0.636          0.1545  0.660          0.1545  0.727
0.1551  0.770          0.1741  0.818          0.1826  0.880          0.1863  0.909
0.1863  0.990          0.1863  1.000          0.2131  1.091          0.2131  1.100
0.2131  1.182          0.2273  1.210          0.2664  1.273          0.2779  1.320
0.2883  1.364          0.3275  1.430          0.3416  1.455          0.3646  1.540
0.3660  1.546          0.3660  1.636          0.3660  1.650          0.4357  1.727
0.4357  1.760          0.4357  1.818          0.4357  1.870          0.4357  1.909
0.4357  1.980          0.4357  2.000          0.4357  2.090          0.4355  2.091
0.4269  2.182          0.4269  2.200          0.4269  2.273          0.4269  2.310
0.4269  2.364          0.4269  2.420          0.4269  2.455          0.4355  2.530
0.4443  2.546          0.4443  2.636          0.4443  2.640          0.4443  2.727
0.4443  2.750          0.4443  2.860          0.4443  2.864          0.4443  2.970
0.4443  3.000          0.4443  3.080          0.4290  3.136          0.4202  3.190
```

0.4400	3.273	0.4400	3.300	0.4400	3.455	0.4400	3.465
0.4400	3.630	0.4400	3.636	0.4400	3.795	0.4400	3.818
0.4400	3.960	0.4365	4.000	0.4213	4.180	0.4213	4.182
0.4551	4.364	0.4551	4.400	0.4551	4.546	0.4704	4.620
0.5106	4.773	0.5130	4.840	0.5411	5.000	0.5411	5.060
0.5411	5.227	0.5411	5.280	0.5411	5.455	0.5411	5.500
0.5411	5.682	0.5411	5.775	0.5411	5.909	0.5411	6.050
0.5055	6.136	0.4917	6.325	0.4917	6.364	0.4917	6.455
0.4917	6.591	0.4917	6.600	0.4917	6.818	0.4917	6.875
0.4917	7.046	0.4917	7.150	0.4917	7.273	0.4917	7.425
0.4502	7.636	0.4443	7.700	0.4439	7.727	0.4429	7.810
0.4360	7.975	0.4322	8.182	0.4309	8.250	0.4028	8.525
0.3933	8.636	0.3795	8.800	0.3663	9.091	0.3658	9.240
0.3658	9.350	0.3446	9.546	0.3397	9.900	0.3397	10.000
0.3397	10.450	0.3393	10.455	0.3009	10.909	0.2963	11.000
0.2963	11.364	0.2963	11.550	0.2801	11.818	0.2634	12.100
0.2617	12.273	0.2579	12.650	0.2565	12.727	0.2481	13.182
0.2477	13.200	0.2313	13.636	0.2313	13.750	0.2313	14.300
0.2289	14.546	0.2272	14.727	0.2260	14.850	0.2114	15.400
0.2098	15.455	0.1957	15.950	0.1831	16.364	0.1831	16.500
0.1831	17.546	0.1831	17.600	0.1778	17.820	0.1737	18.182
0.1681	18.700	0.1644	19.091	0.1578	19.800	0.1569	20.000
0.1519	21.230	0.1490	22.000	0.1490	22.727	0.1490	23.100
0.1489	24.200	0.1483	25.455	0.1477	26.727	0.1474	27.500
0.1458	28.182	0.1447	28.636	0.1442	30.800	0.1442	30.909
0.1442	32.340	0.1425	34.100	0.1425	34.650	0.1425	37.400

END OF RESPONSE SPECTRUM

$**********
STORE RESPONSE SPECTRA ACCELERATION LINEAR VS FREQUENCY LOG 'OBEV'
DAMPING RATIO 0.02 FACTOR 386.08

0.0211	0.182	0.0278	0.220	0.0354	0.273	0.0480	0.330
0.0544	0.364	0.0669	0.440	0.0691	0.455	0.1014	0.550
0.1035	0.660	0.1039	0.770	0.1166	0.818	0.1223	0.880
0.1248	1.000	0.1427	1.100	0.1427	1.182	0.1522	1.210
0.1784	1.273	0.1861	1.320	0.1929	1.364	0.2191	1.430
0.2285	1.455	0.2451	1.546	0.2451	1.636	0.2914	1.727
0.2914	2.090	0.2912	2.091	0.2848	2.182	0.2848	2.455
0.2905	2.530	0.2963	2.546	0.2963	3.080	0.2858	3.136
0.2779	3.190	0.2896	3.273	0.2896	3.636	0.2896	3.960
0.2875	4.000	0.2785	4.182	0.2900	4.364	0.2900	4.546
0.2939	4.620	0.3142	4.773	0.3205	4.840	0.3351	5.000
0.3351	5.500	0.3351	6.050	0.3227	6.136	0.3240	6.325
0.3242	6.364	0.3250	6.455	0.3266	6.591	0.3266	7.046
0.3266	7.636	0.3266	7.975	0.3154	8.182	0.3118	8.250
0.2939	8.525	0.2852	8.636	0.2810	8.800	0.2810	9.240
0.2809	9.350	0.2640	9.546	0.2585	9.900	0.2585	10.450
0.2582	10.455	0.2272	10.909	0.2250	11.000	0.2250	11.550
0.2036	12.100	0.2006	12.650	0.1984	13.200	0.1752	13.636
0.1693	13.750	0.1447	14.300	0.1409	14.546	0.1382	14.727
0.1254	15.950	0.1204	16.500	0.1199	17.546	0.1199	17.600
0.1156	17.820	0.1009	19.800	0.1009	21.230	0.0947	22.000
0.0940	22.727	0.0940	25.455	0.0959	26.727	0.0959	32.340
0.0930	34.100	0.0930	37.400				

END OF RESPONSE SPECTRUM

$**********
STORE RESPONSE SPECTRA ACCELERATION LINEAR VS FREQUENCY LOG 'SSEH'
DAMPING RATIO 0.03 FACTOR 386.08

0.0585	0.182	0.0756	0.220	0.0948	0.273	0.1317	0.330
0.1505	0.364	0.1866	0.440	0.1927	0.455	0.2672	0.546
0.2673	0.550	0.2686	0.636	0.2686	0.660	0.2686	0.727
0.2686	0.770	0.2890	0.818	0.3238	0.880	0.3394	0.909
0.3394	0.990	0.3394	1.000	0.3852	1.091	0.3863	1.100
0.3964	1.182	0.4167	1.210	0.4601	1.273	0.4844	1.320
0.5061	1.364	0.5750	1.430	0.5997	1.455	0.6165	1.540
0.6176	1.546	0.6209	1.636	0.6370	1.650	0.7257	1.727
0.7257	1.760	0.7257	1.818	0.7257	1.870	0.7257	1.909
0.7257	1.980	0.7257	2.000	0.7257	2.090	0.7255	2.091
0.7502	2.182	0.7502	2.200	0.7502	2.273	0.7502	2.310
0.7502	2.364	0.7502	2.420	0.7502	2.455	0.7502	2.530
0.7502	2.546	0.7502	2.636	0.7502	2.640	0.7467	2.727
0.7467	2.750	0.7467	2.860	0.7467	2.864	0.7467	2.970
0.7467	3.000	0.7467	3.080	0.7298	3.136	0.7140	3.190
0.7350	3.273	0.7350	3.300	0.7350	3.455	0.7350	3.465
0.7350	3.630	0.7350	3.636	0.7350	3.795	0.7350	3.818
0.7350	3.960	0.7342	4.000	0.7342	4.180	0.7342	4.182
0.7674	4.364	0.7698	4.400	0.7791	4.546	0.8001	4.620
0.8471	4.773	0.8521	4.840	0.8637	5.000	0.8637	5.060

```
0.8637  5.227          0.8637  5.280          0.8637  5.455          0.8637  5.500
0.8637  5.682          0.8637  5.775          0.8637  5.909          0.8637  6.050
0.8321  6.136          0.8076  6.325          0.8076  6.364          0.8076  6.455
0.8076  6.591          0.8076  6.600          0.8076  6.818          0.8076  6.875
0.8076  7.046          0.8076  7.150          0.8076  7.273          0.8076  7.425
0.7632  7.636          0.7501  7.700          0.7459  7.727          0.7418  7.810
0.7320  7.975          0.7320  8.182          0.7320  8.250          0.7092  8.525
0.6859  8.636          0.6522  8.800          0.6415  9.091          0.6362  9.240
0.6352  9.350          0.6059  9.546          0.5892  9.900          0.5892  10.000
0.5892  10.450         0.5887  10.455         0.5427  10.909         0.5338  11.000
0.5183  11.364         0.5105  11.550         0.4896  11.818         0.4722  12.100
0.4722  12.273         0.4722  12.650         0.4668  12.727         0.4360  13.182
0.4348  13.200         0.4141  13.636         0.4141  13.750         0.4141  14.300
0.4141  14.546         0.4141  14.727         0.4141  14.850         0.3872  15.400
0.3844  15.455         0.3595  15.950         0.3449  16.364         0.3418  16.500
0.3399  17.546         0.3398  17.600         0.3355  17.820         0.3264  18.182
0.3137  18.700         0.3088  19.091         0.3002  19.800         0.2995  20.000
0.2955  21.230         0.2853  22.000         0.2853  22.727         0.2853  23.100
0.2813  24.200         0.2805  25.455         0.2797  26.727         0.2793  27.500
0.2772  28.182         0.2761  28.636         0.2761  30.800         0.2761  30.909
0.2761  32.340         0.2686  34.100         0.2686  34.650         0.2686  37.400

END OF RESPONSE SPECTRUM

$**********************************************
STORE RESPONSE SPECTRA ACCELERATION LINEAR VS FREQUENCY LOG 'SSEV'
DAMPING RATIO 0.03 FACTOR 386.08

0.0392  0.182          0.0506  0.220          0.0882  0.330          0.1250  0.440
0.1790  0.546          0.1790  0.550          0.1800  0.636          0.1800  0.770
0.1935  0.818          0.2274  0.909          0.2274  1.000          0.2585  1.100
0.2653  1.182          0.2789  1.210          0.3080  1.273          0.3242  1.320
0.3846  1.430          0.4127  1.540          0.4134  1.546          0.4154  1.636
0.4261  1.650          0.4854  1.727          0.4854  2.090          0.4852  2.091
0.5007  2.182          0.5007  2.420          0.5007  2.640          0.4969  2.727
0.4969  3.080          0.4867  3.300          0.4867  3.636          0.4867  3.960
0.4841  4.000          0.4819  4.180          0.5032  4.546          0.5620  5.000
0.5620  5.500          0.5620  6.050          0.5583  6.136          0.5583  6.600
0.5583  7.425          0.5498  7.636          0.5482  7.700          0.5482  7.810
0.5328  7.975          0.5328  8.250          0.4934  8.800          0.4934  9.240
0.4433  9.900          0.4433  10.450         0.4013  11.000         0.3809  11.550
0.3572  12.100         0.3347  13.200         0.2749  14.300         0.2499  15.400
0.2267  16.500         0.2211  17.546         0.2001  18.700         0.1936  19.800
0.1936  21.230         0.1851  22.000         0.1796  23.100         0.1796  25.455
0.1842  26.727         0.1842  28.182         0.1842  30.909         0.1842  32.340
0.1778  34.100         0.1778  37.400

END OF RESPONSE SPECTRUM

$*****************************************************************************************
$
INERTIA OF JOINTS CONSISTENT
INERTIA OF JOINTS WEIGHT GRAVITY 386.08
'AA101' TO 'AA104' 'AB101' TO 'AB104' 'AC101' TO 'AC104' 'AE101' TO 'AE104' -
'AG101' TO 'AG104' 'AH101' TO 'AH104' 'AJ101' TO 'AJ104' 'BA101' TO 'BA104' -
'BB101' TO 'BB104' 'BC101' TO 'BC104' 'BD101' TO 'BD104' 'CB101' TO 'CB104' -
'CC101' TO 'CC104' 'CD101' TO 'CD104'   TRANS X 28.125 Y 28.125 Z 28.125

'AA501' TO 'AA504' 'AB501' TO 'AB504' 'AC501' TO 'AC504' 'AE501' TO 'AE504' -
'AG501' TO 'AG504' 'AH501' TO 'AH504' 'AJ501' TO 'AJ504' 'BA501' TO 'BA504' -
'BB501' TO 'BB504' 'BC501' TO 'BC504' 'BD501' TO 'BD504' 'CB501' TO 'CB504' -
'CC501' TO 'CC504' 'CD501' TO 'CD504' TRANS X 27.125 Y 27.125 Z 27.125

'AA201' TO 'AA204' 'AB201' TO 'AB204' 'AC201' TO 'AC204' 'AE201' TO 'AE204' -
'AG201' TO 'AG204' 'AH201' TO 'AH204' 'AJ201' TO 'AJ204' 'BA201' TO 'BA204' -
'BB201' TO 'BB204' 'BC201' TO 'BC204' 'BD201' TO 'BD204' 'CB201' TO 'CB204' -
'CC201' TO 'CC204' 'CD201' TO 'CD204' TRANS X 52.75 Y 52.75 Z 52.75

'AA301' TO 'AA304' 'AB301' TO 'AB304' 'AC301' TO 'AC304' 'AE301' TO 'AE304' -
'AG301' TO 'AG304' 'AH301' TO 'AH304' 'AJ301' TO 'AJ304' 'AA401' TO 'AA404' -
'AB401' TO 'AB404' 'AC401' TO 'AC404' 'AE401' TO 'AE404' 'AG401' TO 'AG404' -
'AH401' TO 'AH404' 'AJ401' TO 'AJ404' 'BA301' TO 'BA304' 'BB301' TO 'BB304' -
'BC301' TO 'BC304' 'BD301' TO 'BD304' 'BA401' TO 'BA404' 'BB401' TO 'BB404' -
'BC401' TO 'BC404' 'BD401' TO 'BD404' 'CB301' TO 'CB304' 'CC301' TO 'CC304' -
'CD301' TO 'CD304' 'CB401' TO 'CB404' 'CC401' TO 'CC404' 'CD401' TO 'CD404' -
TRANS X 49.25 Y 49.25 Z 49.25

'BE101' TO 'BE104' 'BF101' TO 'BF104' 'BG101' TO 'BG104' 'BH101' TO 'BH104' -
'BJ101' TO 'BJ104' 'CE101' TO 'CE104' 'CF101' TO 'CF104' 'CG101' TO 'CG104' -
'CH101' TO 'CH104' TRANS X 28.1 Y 28.1 Z 28.1

'BE401' TO 'BE404' 'BF401' TO 'BF404' 'BG401' TO 'BG404' -
'BH401' TO 'BH404' 'BJ401' TO 'BJ404' 'CE401' TO 'CE404' 'CF401' TO 'CF404' -
```

```
'CG401' TO 'CG404' 'CH401' TO 'CH404' TRANS X 30.6 Y 30.6 Z 30.6

'BE201' TO 'BE204' 'BF201' TO 'BF204' 'BG201' TO 'BG204' 'BH201' TO 'BH204' -
'BJ201' TO 'BJ204' 'CE201' TO 'CE204' 'CF201' TO 'CF204' 'CG201' TO 'CG204' -
'CH201' TO 'CH204' 'BE301' TO 'BE304' 'BF301' TO 'BF304' 'BG301' TO 'BG304' -
'BH301' TO 'BH304' 'BJ301' TO 'BJ304' 'CE301' TO 'CE304' 'CF301' TO 'CF304' -
'CG301' TO 'CG304' 'CH301' TO 'CH304' TRANS X 56.3 Y 56.3 Z 56.3

$
EIGEN PARAMETERS
SOLVE USING GTLANCZOS
NUMBER OF MODES 205
PERFORM NO STURM SEQUENCE CHECK
PRINT MAX
END
$
DYNAMIC ANALYSIS EIGENSOLUTION
LIST DYNAMIC PARTICIPATION FACTORS
LIST DYNAMIC MASS SUMMARY

$
$==========================================================================================
ACTIVE MODES ALL
RESPONSE SPECTRA LOADING 'RSOBEX'
SUPPORT ACCELERATION
TRANSLATION X 1.0 FILE 'OBEH'
END RESPONSE SPECTRUM LOAD
$
RESPONSE SPECTRA LOADING 'RSOBEY'
SUPPORT ACCELERATION
TRANSLATION Y 1.0 FILE 'OBEV'
END RESPONSE SPECTRUM LOAD
$
RESPONSE SPECTRA LOADING 'RSOBEZ'
SUPPORT ACCELERATION
TRANSLATION Z 1.0 FILE 'OBEH'
END RESPONSE SPECTRUM LOAD
$
RESPONSE SPECTRA LOADING 'RSSSEX'
SUPPORT ACCELERATION
TRANSLATION X 1.0 FILE 'SSEH'
END RESPONSE SPECTRUM LOAD
$
RESPONSE SPECTRA LOADING 'RSSSEY'
SUPPORT ACCELERATION
TRANSLATION Y 1.0 FILE 'SSEV'
END RESPONSE SPECTRUM LOAD
$
RESPONSE SPECTRA LOADING 'RSSSEZ'
SUPPORT ACCELERATION
TRANSLATION Z 1.0 FILE 'SSEH'
END RESPONSE SPECTRUM LOAD
$
DAMPING RATIO 0.02 205
LOAD LIST 'RSOBEX' 'RSOBEY' 'RSOBEZ'
ACTIVE MODES ALL
PERFORM RESPONSE SPECTRUM ANALYSIS
$
DAMPING RATIO 0.03 205
LOAD LIST 'RSSSEX' 'RSSSEY' 'RSSSEZ'
PERFORM RESPONSE SPECTRUM ANALYSIS
$
LOAD LIST 'RSOBEX' 'RSOBEY' 'RSOBEZ' 'RSSSEX' 'RSSSEY' 'RSSSEZ'
COMPUTE RESPONSE SPECTRUM DISPLACEMENTS FORCES LOADS REACTIONS MODAL COMBINATIONS TPM
$
FORM MISSING MASS LOADING 'MMOBEX' FROM SPECT LOAD 'RSOBEX' CUTOFF FREQUENCY 33. DAMPING RATIO 0.02
FORM MISSING MASS LOADING 'MMOBEY' FROM SPECT LOAD 'RSOBEY' CUTOFF FREQUENCY 33. DAMPING RATIO 0.02
FORM MISSING MASS LOADING 'MMOBEZ' FROM SPECT LOAD 'RSOBEZ' CUTOFF FREQUENCY 33. DAMPING RATIO 0.02
FORM MISSING MASS LOADING 'MMSSEX' FROM SPECT LOAD 'RSSSEX' CUTOFF FREQUENCY 33. DAMPING RATIO 0.03
FORM MISSING MASS LOADING 'MMSSEY' FROM SPECT LOAD 'RSSSEY' CUTOFF FREQUENCY 33. DAMPING RATIO 0.03
FORM MISSING MASS LOADING 'MMSSEZ' FROM SPECT LOAD 'RSSSEZ' CUTOFF FREQUENCY 33. DAMPING RATIO 0.03
$
LOADING LIST ALL
STIFFNESS ANALYSIS
$
CREATE PSEUDO STATIC LOAD 'OBEX1' FROM TPM OF LOADING 'RSOBEX'
CREATE PSEUDO STATIC LOAD 'OBEY1' FROM TPM OF LOADING 'RSOBEY'
CREATE PSEUDO STATIC LOAD 'OBEZ1' FROM TPM OF LOADING 'RSOBEZ'
CREATE PSEUDO STATIC LOAD 'SSEX1' FROM TPM OF LOADING 'RSSSEX'
CREATE PSEUDO STATIC LOAD 'SSEY1' FROM TPM OF LOADING 'RSSSEY'
CREATE PSEUDO STATIC LOAD 'SSEZ1' FROM TPM OF LOADING 'RSSSEZ'

CREATE LOAD COMB 'OBEX' TYPE ABS SPEC 'OBEX1' 1. 'MMOBEX' 1.
```

```
CREATE LOAD COMB 'OBEY' TYPE ABS SPEC 'OBEY1' 1. 'MMOBEY' 1.
CREATE LOAD COMB 'OBEZ' TYPE ABS SPEC 'OBEZ1' 1. 'MMOBEZ' 1.
CREATE LOAD COMB 'SSEX' TYPE ABS SPEC 'SSEX1' 1. 'MMSSEX' 1.
CREATE LOAD COMB 'SSEY' TYPE ABS SPEC 'SSEY1' 1. 'MMSSEY' 1.
CREATE LOAD COMB 'SSEZ' TYPE ABS SPEC 'SSEZ1' 1. 'MMSSEZ' 1.

$
$=====================================DEFINE LOAD COMBINATIONS==========================
$
CREATE LOAD COMB 'DW'        TYPE ALG SPEC 'YSTEEL'  1. 'YMODULE'  1.
CREATE LOAD COMB 'DW+WD+DP'  TYPE ALG SPEC 'DW' 1. 'PRESSURE' 1. 'DEB' 1.
CREATE LOAD COMB 'DW+D+P+T'  TYPE ALG SPEC 'DW+WD+DP' 1. 'TAL' 1.

CREATE LOAD COMB 'SEISOBEX'  TYPE ABS SPEC 'OBEX' 1. 'OBEY' 1.
CREATE LOAD COMB 'SEISOBEZ'  TYPE ABS SPEC 'OBEZ' 1. 'OBEY' 1.
CREATE LOAD COMB 'SEISSSEX'  TYPE ABS SPEC 'SSEX' 1. 'SSEY' 1.
CREATE LOAD COMB 'SEISSSEZ'  TYPE ABS SPEC 'SSEZ' 1. 'SSEY' 1.

CREATE LOAD COMB 'DW+OBEX+'  TYPE ALG SPEC 'DW' 1. 'SEISOBEX'  1.
CREATE LOAD COMB 'DW+OBEX-'  TYPE ALG SPEC 'DW' 1. 'SEISOBEX' -1.
CREATE LOAD COMB 'DW+OBEZ+'  TYPE ALG SPEC 'DW' 1. 'SEISOBEZ'  1.
CREATE LOAD COMB 'DW+OBEZ-'  TYPE ALG SPEC 'DW' 1. 'SEISOBEZ' -1.

CREATE LOAD COMB 'DW+SSEX+'  TYPE ALG SPEC 'DW' 1. 'SEISSSEX'  1.
CREATE LOAD COMB 'DW+SSEX-'  TYPE ALG SPEC 'DW' 1. 'SEISSSEX' -1.
CREATE LOAD COMB 'DW+SSEZ+'  TYPE ALG SPEC 'DW' 1. 'SEISSSEZ'  1.
CREATE LOAD COMB 'DW+SSEZ-'  TYPE ALG SPEC 'DW' 1. 'SEISSSEZ' -1.

CREATE LOAD COMB 'DWTOOBX+'  TYPE ALG SPEC 'SEISOBEX'  1. 'DW' 1. 'TOL' 1.
CREATE LOAD COMB 'DWTOOBX-'  TYPE ALG SPEC 'SEISOBEX' -1. 'DW' 1. 'TOL' 1.
CREATE LOAD COMB 'DWTOOBZ+'  TYPE ALG SPEC 'SEISOBEZ'  1. 'DW' 1. 'TOL' 1.
CREATE LOAD COMB 'DWTOOBZ-'  TYPE ALG SPEC 'SEISOBEZ' -1. 'DW' 1. 'TOL' 1.

CREATE LOAD COMB 'DWTOSSX+'  TYPE ALG SPEC 'SEISSSEX'  1. 'DW' 1. 'TOL' 1.
CREATE LOAD COMB 'DWTOSSX-'  TYPE ALG SPEC 'SEISSSEX' -1. 'DW' 1. 'TOL' 1.
CREATE LOAD COMB 'DWTOSSZ+'  TYPE ALG SPEC 'SEISSSEZ'  1. 'DW' 1. 'TOL' 1.
CREATE LOAD COMB 'DWTOSSZ-'  TYPE ALG SPEC 'SEISSSEZ' -1. 'DW' 1. 'TOL' 1.
$
$=========================================OUTPUT RESULTS================================
$
LOADING LIST 'DW+SSEX+' 'DW+SSEX-' 'DW+SSEZ+' 'DW+SSEZ-'
$
OUTPUT DECIMAL 3
LIST MAX JOI DISPLACEMENTS JOINT GROUP 'DISPJT' AND LOADS ACTIVE ONLY
OUTPUT BY MEMBER
OUTPUT DECIMAL 2
LOADING LIST 'DW' 'TOL' 'TAL' 'YMODULE' 'YSTEEL' 'PRESSURE' 'DW+WD+DP' 'DW+D+P+T' -
'DW+OBEX+' 'DW+OBEX-' 'DW+OBEZ+' 'DW+OBEZ-' 'DWTOOBX+' 'DWTOOBX-' 'DWTOOBZ+' 'DWTOOBZ-' -
'DW+SSEX+' 'DW+SSEX-' 'DW+SSEZ+' 'DW+SSEZ-' 'DWTOSSX+' 'DWTOSSX-' 'DWTOSSZ+' 'DWTOSSZ-'
LIST FORCE GROUP 'ALLBUT'
OUTPUT ORDERED
LIST REACTIONS ALL
STEEL TAKE OFF ALL
OUTPUT UNORDERED

$
$==============================PERFORM CODE CHECKS=====================================
CONSTANTS
E 28300000
$
$============================ CODE CHECK LOAD COMB 5 ==================================
LOADING LIST 'DW+D+P+T'
PARAMETER
'CODE' '78AISC' ALL
'CODETOL' 60.0  ALL
'FYLD' 25500.   ALL
'FTS'  71400.   ALL
'REDE' 0.977    ALL
'REDE' 0.47     MEM GROUP 'PLATE1' GROUP 'PLATE2' GROUP 'TCPLAT' GROUP 'TCPLAT2'
'CB'    1.0     ALL
'CMY'   1.0     ALL
'CMZ'   1.0     ALL
'KY'    1.0     MEM GROUP 'PCHAN' GROUP 'HEX' GROUP 'PLATE3'
'KZ'    1.0     MEM GROUP 'PCHAN' GROUP 'HEX' GROUP 'PLATE3'
'KY'    1.87    MEM GROUP 'BEAM'
'KZ'    1.87    MEM GROUP 'BEAM'
'KY'    8.16    MEM GROUP 'TS'
'KZ'    8.16    MEM GROUP 'TS'
'KY'    1.29    MEM GROUP 'PLATE3'
'KZ'    1.29    MEM GROUP 'PLATE3'
'KY'    1.61    MEM GROUP 'WEB'
'KZ'    1.61    MEM GROUP 'WEB'
'LY'    28.75   MEM GROUP 'PLATE1' GROUP 'PLATE2' GROUP 'TCPLAT' GROUP 'TCPLAT2'
```

```
'LY'    96.0    MEM GROUP 'BEAM'
'LY'     5.48    MEM GROUP 'WEB'
'LZ'     5.48   MEM GROUP 'WEB'
'TRACE' 1       ALL
'SUMMARY' YES   ALL
CHECK CODE MEM GROUP 'CODEBEAM' AS BEAM NEW CHECK PROCEDURE
CHECK CODE MEM GROUP 'CODECOL' AS COLUMN NEW CHECK PROCEDURE
SUMMARY CODE CHECK FOR GROUP 'CODEMEM' CRITICAL SECTIONS

$==========================================================================================
$
$============================ CODE CHECK LOAD COMB 4 ======================================
LOADING LIST 'DWTOSSX+' 'DWTOSSX-' 'DWTOSSZ+' 'DWTOSSZ-'
PARAMETER
'CODETOL' 50.0  ALL
'FYLD' 28000.   ALL
'FTS'  73400.   ALL
'REDE' 0.963    ALL
'REDE' 0.45     MEM GROUP 'PLATE1' GROUP 'PLATE2' GROUP 'TCPLAT' GROUP 'TCPLAT2'
CHECK CODE MEM GROUP 'CODEBEAM' AS BEAM NEW CHECK PROCEDURE
CHECK CODE MEM GROUP 'CODECOL' AS COLUMN NEW CHECK PROCEDURE
SUMMARY CODE CHECK FOR GROUP 'CODEMEM' CRITICAL SECTIONS
SUMMARY CODE CHECK FOR MEM 'RIGD189' CRITICAL SECTIONS ALL VALUES

$==========================================================================================
$
$============================ CODE CHECK LOAD COMB  1 & 2 ================================
LOADING LIST 'DW+WD+DP' 'DW+OBEX+' 'DW+OBEX-' 'DW+OBEZ+' 'DW+OBEZ-'
PARAMETER
'FYLD' 30000.   ALL
'FTS'  75000.   ALL
'REDE' 1.000    ALL
'REDE' 0.47     MEM GROUP 'PLATE1' GROUP 'PLATE2' GROUP 'TCPLAT' GROUP 'TCPLAT2'
'CODETOL' 0.0   ALL
CHECK CODE MEM GROUP 'CODEBEAM' AS BEAM NEW CHECK PROCEDURE
CHECK CODE MEM GROUP 'CODECOL' AS COLUMN NEW CHECK PROCEDURE
SUMMARY CODE CHECK FOR GROUP 'CODEMEM' CRITICAL SECTIONS

$==========================================================================================
$
$============================ CODE CHECK LOAD COMB 6 ======================================
LOADING LIST  'DW+SSEX+' 'DW+SSEX-' 'DW+SSEZ+' 'DW+SSEZ-'
PARAMETER
'FYLD' 30000.   ALL
'FTS'  75000.   ALL
'REDE' 1.00     ALL
'REDE' 0.47     MEM GROUP 'PLATE1' GROUP 'PLATE2' GROUP 'TCPLAT' GROUP 'TCPLAT2'
'CODETOL' 30.0  ALL
'CODETOL' 20.0  MEM GROUP 'RECT'
CHECK CODE MEM GROUP 'CODEBEAM' AS BEAM NEW CHECK PROCEDURE
CHECK CODE MEM GROUP 'CODECOL' AS COLUMN NEW CHECK PROCEDURE
SUMMARY CODE CHECK FOR GROUP 'CODEMEM' CRITICAL SECTIONS

$==========================================================================================
$
PLO DEV PC
PLOT PROJECTION 0 -40 20
FINISH
→
```

Commercial Software Rights Legend

Any use, duplication or disclosure of this software by or for the U.S. Government shall be restricted to the terms of a license agreement in accordance with the clause at DFARS 227.7202-3.

This computer software is an unpublished work containing valuable trade secrets owned by the Georgia Tech Research Corporation (GTRC). No access, use, transfer, duplication or disclosure thereof may be made except under a license agreement executed by GTRC or its authorized representatives and no right, title or interest thereto is conveyed or granted herein, notwithstanding receipt or possession hereof. Decompilation of the object code is strictly prohibited.

Georgia Tech Research Corporation
Georgia Institute of Technology
Atlanta, Georgia 30332 U.S.A.

Copyright (c) 1999 GTRC
ALL RIGHTS RESERVED.

```
# Wed May 17 22:49:04 2006


1GTICES/C-NP 2.5.0 MD-NT 2.0, January 1995.
 Proprietary to Georgia Tech Research Corporation, U.S.A.

Reading password file C:\Program Files\GTStrudl\25\gtaccess-first key.dat
 CI-i-audfile, Command AUDIT file FILE2249.aud has been activated.

 *** G T S T R U D L ***
    RELEASE DATE          VERSION             COMPLETION NO.
    August 30, 2000       25.0                    4085

 **** ACTIVE UNITS -  LENGTH   WEIGHT   ANGLE    TEMPERATURE   TIME
 **** ASSUMED TO BE     INCH    POUND   RADIAN    FAHRENHEIT   SECOND


 {    1} > $ -------------------------------------------------------
 {    2} > $ This is the Common Startup Macro; put your company-wide startup commands here.
 {    3} > $ You can edit this file from Tools -- Macros.  Click "Startup" and then "Edit".
 {    4} > $ -------------------------------------------------------

 {    1} > CINPUT 'D:\Scott Projects\AES\tva\New runs\WATTS BAR PLENUM FINALm.str'
 {    2} > *TITLE   'PCI SUCTION PLENUM SUPPORT STRUCTURE'
 {    3} > STRUDL



  ******************************************************************
  *                                                                *
  *   ******                          G T S T R U D L              *
  *  ********                                                      *
  *  **    **                                                      *
  *  **               *****  ******  *****   **  **  *****   **    *
  *  **  **********  ******  ******  ******  **  **  ******  **    *
  *  **  **********  **        **    **  **  **  **  **  **  **    *
  *  **    ****      *****     **    ******  **  **  **  **  **    *
  *  **********       *****    **    *****   **  **  **  **  **    *
  *   ****** **          **    **    ** **   **  **  **  **  **    *
  *          **      ******    **    **  **  ******  ******  *******
  *          **      *****     **    **  **   ****   *****   *******
  *          **                                                    *
  *          **                 OWNED BY AND PROPRIETARY TO THE    *
  *          **                 GEORGIA TECH RESEARCH CORPORATION  *
  *                                                                *
  *  RELEASE DATE          VERSION             COMPLETION NO.      *
  *  August 30, 2000       25.0                    4085            *
  *                                                                *
  ******************************************************************



 **** ACTIVE UNITS -  LENGTH   WEIGHT   ANGLE    TEMPERATURE   TIME
 **** ASSUMED TO BE     INCH    POUND   RADIAN    FAHRENHEIT   SECOND

 {    4} > UNITS INCHES POUNDS DEGREES SECONDS FAHRENHEIT
 {    5} > WARNING MESSAGE LIMIT 1
CI-w-cmdnfnd, Command 'WARNING' is not recognized.
 {    6} > TYPE SPACE FRAME
 {    7} > $
 {    8} > $.................SUPPORT GEOMETRY....................
 {    9} > $
 {   10} > JOINT COORDINATES
 {   11} > $
 {   12} > $  NODES FOR SUPPORT STRUCTURE (LOCATIONS FROM LEFT REAR BASE SUPPORT)
 {   13} > $
 {   14} > $===========================BASE SUPPORT BEAM NODES==============================
 {   15} > $
 {   16} > GENERATE 3 JOINTS ID 1,11   X  3.0    Z L 0.0 -32.0 -64.0

   /-------   CARTESIAN COORDINATES     FREE, GLOBAL  -------/
```

```
     JOINT            X              Y              Z

       1            3.000          0.000          0.000
      12            3.000          0.000        -32.000
      23            3.000          0.000        -64.000

{   17} > GENERATE 4 JOINTS ID 2,11   X 32.0    Z L 0.0 -32.0 -64.0 -96.0

  /-------   CARTESIAN COORDINATES      FREE, GLOBAL  -------/

     JOINT            X              Y              Z

       2           32.000          0.000          0.000
      13           32.000          0.000        -32.000
      24           32.000          0.000        -64.000
      35           32.000          0.000        -96.000

{   18} > REPEAT 3 ID 1 X INC 32.0

  /-------   CARTESIAN COORDINATES      FREE, GLOBAL  -------/

     JOINT            X              Y              Z

       3           64.000          0.000          0.000
      14           64.000          0.000        -32.000
      25           64.000          0.000        -64.000
      36           64.000          0.000        -96.000

       4           96.000          0.000          0.000
      15           96.000          0.000        -32.000
      26           96.000          0.000        -64.000
      37           96.000          0.000        -96.000

       5          128.000          0.000          0.000
      16          128.000          0.000        -32.000
      27          128.000          0.000        -64.000
      38          128.000          0.000        -96.000

{   19} > GENERATE 4 JOINTS ID 7,11   X 192.0   Z L 0.0 -32.0 -64.0 -96.0

  /-------   CARTESIAN COORDINATES      FREE, GLOBAL  -------/

     JOINT            X              Y              Z

       7          192.000          0.000          0.000
      18          192.000          0.000        -32.000
      29          192.000          0.000        -64.000
      40          192.000          0.000        -96.000

{   20} > REPEAT 1 ID 1 X INC 29.125

  /-------   CARTESIAN COORDINATES      FREE, GLOBAL  -------/

     JOINT            X              Y              Z

       8          221.125          0.000          0.000
      19          221.125          0.000        -32.000
      30          221.125          0.000        -64.000
      41          221.125          0.000        -96.000

{   21} > GENERATE 4 JOINTS ID 9,11   X 230.875 Z L 0.0 -32.0 -64.0 -96.0

  /-------   CARTESIAN COORDINATES      FREE, GLOBAL  -------/

     JOINT            X              Y              Z

       9          230.875          0.000          0.000
      20          230.875          0.000        -32.000
      31          230.875          0.000        -64.000
      42          230.875          0.000        -96.000

{   22} > REPEAT 1 ID 1 X INC 29.125

  /-------   CARTESIAN COORDINATES      FREE, GLOBAL  -------/

     JOINT            X              Y              Z

      10          260.000          0.000          0.000
      21          260.000          0.000        -32.000
      32          260.000          0.000        -64.000
      43          260.000          0.000        -96.000

{   23} > GENERATE 3 JOINTS ID 11,11  X 289.0   Z L   0.0 -32.0 -64.0

  /-------   CARTESIAN COORDINATES      FREE, GLOBAL  -------/

     JOINT            X              Y              Z

      11          289.000          0.000          0.000
      22          289.000          0.000        -32.000
      33          289.000          0.000        -64.000

{   24} > GENERATE 2 JOINTS ID 28,11  X 160.0   Z L -64.0 -96.0

  /-------   CARTESIAN COORDINATES      FREE, GLOBAL  -------/
```

```
      JOINT            X              Y              Z

        28           160.000          0.000        -64.000
        39           160.000          0.000        -96.000

{   25} >
{   26} > $==============================RIGID MEM NODES FOR ANCHORS=======================
{   27} > GENERATE 3 JOINTS ID 'WA1',11   X  3.0    Y -2.995  Z L 0.0 -32.0 -64.0

  /-------   CARTESIAN COORDINATES      FREE, GLOBAL  -------/

      JOINT            X              Y              Z

     WA1               3.000         -2.995          0.000
     WA12              3.000         -2.995        -32.000
     WA23              3.000         -2.995        -64.000

{   28} > GENERATE 4 JOINTS ID 'WA2',11   X 32.0    Y -2.995  Z L 0.0 -32.0 -64.0 -96.0

  /-------   CARTESIAN COORDINATES      FREE, GLOBAL  -------/

      JOINT            X              Y              Z

     WA2              32.000         -2.995          0.000
     WA13             32.000         -2.995        -32.000
     WA24             32.000         -2.995        -64.000
     WA35             32.000         -2.995        -96.000

{   29} > REPEAT 3 ID 1 X INC 32.0

  /-------   CARTESIAN COORDINATES      FREE, GLOBAL  -------/

      JOINT            X              Y              Z

     WA3              64.000         -2.995          0.000
     WA14             64.000         -2.995        -32.000
     WA25             64.000         -2.995        -64.000
     WA36             64.000         -2.995        -96.000

     WA4              96.000         -2.995          0.000
     WA15             96.000         -2.995        -32.000
     WA26             96.000         -2.995        -64.000
     WA37             96.000         -2.995        -96.000

     WA5             128.000         -2.995          0.000
     WA16            128.000         -2.995        -32.000
     WA27            128.000         -2.995        -64.000
     WA38            128.000         -2.995        -96.000

{   30} > GENERATE 4 JOINTS ID 'WA7',11   X 192.0   Y -2.995  Z L 0.0 -32.0 -64.0 -96.0

  /-------   CARTESIAN COORDINATES      FREE, GLOBAL  -------/

      JOINT            X              Y              Z

     WA7             192.000         -2.995          0.000
     WA18            192.000         -2.995        -32.000
     WA29            192.000         -2.995        -64.000
     WA40            192.000         -2.995        -96.000

{   31} > REPEAT 1 ID 1 X INC 29.125

  /-------   CARTESIAN COORDINATES      FREE, GLOBAL  -------/

      JOINT            X              Y              Z

     WA8             221.125         -2.995          0.000
     WA19            221.125         -2.995        -32.000
     WA30            221.125         -2.995        -64.000
     WA41            221.125         -2.995        -96.000

{   32} > GENERATE 4 JOINTS ID 'WA9',11   X 230.875 Y -2.995  Z L 0.0 -32.0 -64.0 -96.0

  /-------   CARTESIAN COORDINATES      FREE, GLOBAL  -------/

      JOINT            X              Y              Z

     WA9             230.875         -2.995          0.000
     WA20            230.875         -2.995        -32.000
     WA31            230.875         -2.995        -64.000
     WA42            230.875         -2.995        -96.000

{   33} > REPEAT 1 ID 1 X INC 29.125

  /-------   CARTESIAN COORDINATES      FREE, GLOBAL  -------/

      JOINT            X              Y              Z

     WA10            260.000         -2.995          0.000
     WA21            260.000         -2.995        -32.000
     WA32            260.000         -2.995        -64.000
     WA43            260.000         -2.995        -96.000

{   34} > GENERATE 3 JOINTS ID 'WA11',11  X 289.0   Y -2.995  Z L   0.0 -32.0 -64.0

  /-------   CARTESIAN COORDINATES      FREE, GLOBAL  -------/
```

```
     JOINT            X              Y              Z

    WA11            289.000        -2.995          0.000
    WA22            289.000        -2.995        -32.000
    WA33            289.000        -2.995        -64.000

{   35} > GENERATE 2 JOINTS ID 'WA28',11  X 160.0   Y -2.995  Z L -64.0 -96.0

  /-------   CARTESIAN COORDINATES      FREE, GLOBAL  -------/

     JOINT            X              Y              Z

    WA28            160.000        -2.995        -64.000
    WA39            160.000        -2.995        -96.000

{   36} >
{   37} > $==============================TOP FLANGE MEM NODES ==========================
{   38} > GENERATE 3 JOINTS ID 'TF1',11   X  3.0    Y 2.865  Z L 0.0 -32.0 -64.0

  /-------   CARTESIAN COORDINATES      FREE, GLOBAL  -------/

     JOINT            X              Y              Z

    TF1               3.000          2.865          0.000
    TF12              3.000          2.865        -32.000
    TF23              3.000          2.865        -64.000

{   39} > GENERATE 4 JOINTS ID 'TF2',11   X 32.0    Y 2.865  Z L 0.0 -32.0 -64.0 -96.0

  /-------   CARTESIAN COORDINATES      FREE, GLOBAL  -------/

     JOINT            X              Y              Z

    TF2              32.000          2.865          0.000
    TF13             32.000          2.865        -32.000
    TF24             32.000          2.865        -64.000
    TF35             32.000          2.865        -96.000

{   40} > REPEAT 3 ID 1 X INC 32.0

  /-------   CARTESIAN COORDINATES      FREE, GLOBAL  -------/

     JOINT            X              Y              Z

    TF3              64.000          2.865          0.000
    TF14             64.000          2.865        -32.000
    TF25             64.000          2.865        -64.000
    TF36             64.000          2.865        -96.000

    TF4              96.000          2.865          0.000
    TF15             96.000          2.865        -32.000
    TF26             96.000          2.865        -64.000
    TF37             96.000          2.865        -96.000

    TF5             128.000          2.865          0.000
    TF16            128.000          2.865        -32.000
    TF27            128.000          2.865        -64.000
    TF38            128.000          2.865        -96.000

{   41} > GENERATE 4 JOINTS ID 'TF7',11   X 192.0   Y 2.865  Z L 0.0 -32.0 -64.0 -96.0

  /-------   CARTESIAN COORDINATES      FREE, GLOBAL  -------/

     JOINT            X              Y              Z

    TF7             192.000          2.865          0.000
    TF18            192.000          2.865        -32.000
    TF29            192.000          2.865        -64.000
    TF40            192.000          2.865        -96.000

{   42} > REPEAT 1 ID 1 X INC 29.125

  /-------   CARTESIAN COORDINATES      FREE, GLOBAL  -------/

     JOINT            X              Y              Z

    TF8             221.125          2.865          0.000
    TF19            221.125          2.865        -32.000
    TF30            221.125          2.865        -64.000
    TF41            221.125          2.865        -96.000

{   43} > GENERATE 4 JOINTS ID 'TF9',11   X 230.875 Y 2.865   Z L 0.0 -32.0 -64.0 -96.0

  /-------   CARTESIAN COORDINATES      FREE, GLOBAL  -------/

     JOINT            X              Y              Z

    TF9             230.875          2.865          0.000
    TF20            230.875          2.865        -32.000
    TF31            230.875          2.865        -64.000
    TF42            230.875          2.865        -96.000

{   44} > REPEAT 1 ID 1 X INC 29.125

  /-------   CARTESIAN COORDINATES      FREE, GLOBAL  -------/
```

```
     JOINT          X              Y              Z

    TF10          260.000         2.865          0.000
    TF21          260.000         2.865        -32.000
    TF32          260.000         2.865        -64.000
    TF43          260.000         2.865        -96.000

{   45} > GENERATE 3 JOINTS ID 'TF11',11  X 289.0   Y 2.865  Z L   0.0 -32.0 -64.0

  /-------   CARTESIAN COORDINATES      FREE, GLOBAL  -------/

     JOINT          X              Y              Z

    TF11          289.000         2.865          0.000
    TF22          289.000         2.865        -32.000
    TF33          289.000         2.865        -64.000

{   46} > GENERATE 2 JOINTS ID 'TF28',11   X 160.0   Y 2.865  Z L -64.0 -96.0

  /-------   CARTESIAN COORDINATES      FREE, GLOBAL  -------/

     JOINT          X              Y              Z

    TF28          160.000         2.865        -64.000
    TF39          160.000         2.865        -96.000

{   47} >
{   48} > $==========================LOWER DECK PLATES NODES==============================
{   49} > GENERATE 3 JOINTS ID 'BP1',11   X  3.0    Y 3.1825   Z L 0.0 -32.0 -64.0

  /-------   CARTESIAN COORDINATES      FREE, GLOBAL  -------/

     JOINT          X              Y              Z

    BP1             3.000          3.182          0.000
    BP12            3.000          3.182        -32.000
    BP23            3.000          3.182        -64.000

{   50} > GENERATE 4 JOINTS ID 'BP2',11   X 32.0    Y 3.1825   Z L 0.0 -32.0 -64.0 -96.0

  /-------   CARTESIAN COORDINATES      FREE, GLOBAL  -------/

     JOINT          X              Y              Z

    BP2            32.000          3.182          0.000
    BP13           32.000          3.182        -32.000
    BP24           32.000          3.182        -64.000
    BP35           32.000          3.182        -96.000

{   51} > REPEAT 4 ID 1 X INC 32.0

  /-------   CARTESIAN COORDINATES      FREE, GLOBAL  -------/

     JOINT          X              Y              Z

    BP3            64.000          3.182          0.000
    BP14           64.000          3.182        -32.000
    BP25           64.000          3.182        -64.000
    BP36           64.000          3.182        -96.000

    BP4            96.000          3.182          0.000
    BP15           96.000          3.182        -32.000
    BP26           96.000          3.182        -64.000
    BP37           96.000          3.182        -96.000

    BP5           128.000          3.182          0.000
    BP16          128.000          3.182        -32.000
    BP27          128.000          3.182        -64.000
    BP38          128.000          3.182        -96.000

    BP6           160.000          3.182          0.000
    BP17          160.000          3.182        -32.000
    BP28          160.000          3.182        -64.000
    BP39          160.000          3.182        -96.000

{   52} > $GENERATE 2 JOINTS ID 'BP28',11 X 160.0   Y 3.1825   Z L -64.0 -96.0
{   53} > GENERATE 4 JOINTS ID 'BP7',11   X 192.0   Y 3.1825   Z L 0.0 -32.0 -64.0 -96.0

  /-------   CARTESIAN COORDINATES      FREE, GLOBAL  -------/

     JOINT          X              Y              Z

    BP7           192.000          3.182          0.000
    BP18          192.000          3.182        -32.000
    BP29          192.000          3.182        -64.000
    BP40          192.000          3.182        -96.000

{   54} > REPEAT 1 ID 1 X INC 29.125

  /-------   CARTESIAN COORDINATES      FREE, GLOBAL  -------/

     JOINT          X              Y              Z

    BP8           221.125          3.182          0.000
    BP19          221.125          3.182        -32.000
```

```
    BP30            221.125          3.182        -64.000
    BP41            221.125          3.182        -96.000

{   55} > GENERATE 4 JOINTS ID 'BP9',11   X 230.875 Y 3.1825   Z L 0.0 -32.0 -64.0 -96.0

  /-------   CARTESIAN COORDINATES      FREE, GLOBAL  -------/

     JOINT            X              Y              Z

    BP9             230.875          3.182          0.000
    BP20            230.875          3.182        -32.000
    BP31            230.875          3.182        -64.000
    BP42            230.875          3.182        -96.000

{   56} > REPEAT 1 ID 1 X INC 29.125

  /-------   CARTESIAN COORDINATES      FREE, GLOBAL  -------/

     JOINT            X              Y              Z

    BP10            260.000          3.182          0.000
    BP21            260.000          3.182        -32.000
    BP32            260.000          3.182        -64.000
    BP43            260.000          3.182        -96.000

{   57} > GENERATE 3 JOINTS ID 'BP11',11  X 289.0   Y 3.1825   Z L 0.0 -32.0 -64.0

  /-------   CARTESIAN COORDINATES      FREE, GLOBAL  -------/

     JOINT            X              Y              Z

    BP11            289.000          3.182          0.000
    BP22            289.000          3.182        -32.000
    BP33            289.000          3.182        -64.000

{   58} >
{   59} > $=========================TOP STUD AND COVER PLATES NODES============================
{   60} > GENERATE 3 JOINTS ID 'TP1',11   X  3.0    Y 15.5575   Z L 0.0 -32.0 -64.0

  /-------   CARTESIAN COORDINATES      FREE, GLOBAL  -------/

     JOINT            X              Y              Z

    TP1               3.000         15.557          0.000
    TP12              3.000         15.557        -32.000
    TP23              3.000         15.557        -64.000

{   61} > GENERATE 4 JOINTS ID 'TP2',11   X 32.0    Y 15.5575   Z L 0.0 -32.0 -64.0 -96.0

  /-------   CARTESIAN COORDINATES      FREE, GLOBAL  -------/

     JOINT            X              Y              Z

    TP2              32.000         15.557          0.000
    TP13             32.000         15.557        -32.000
    TP24             32.000         15.557        -64.000
    TP35             32.000         15.557        -96.000

{   62} > REPEAT 4 ID 1 X INC 32.0

  /-------   CARTESIAN COORDINATES      FREE, GLOBAL  -------/

     JOINT            X              Y              Z

    TP3              64.000         15.557          0.000
    TP14             64.000         15.557        -32.000
    TP25             64.000         15.557        -64.000
    TP36             64.000         15.557        -96.000

    TP4              96.000         15.557          0.000
    TP15             96.000         15.557        -32.000
    TP26             96.000         15.557        -64.000
    TP37             96.000         15.557        -96.000

    TP5             128.000         15.557          0.000
    TP16            128.000         15.557        -32.000
    TP27            128.000         15.557        -64.000
    TP38            128.000         15.557        -96.000

    TP6             160.000         15.557          0.000
    TP17            160.000         15.557        -32.000
    TP28            160.000         15.557        -64.000
    TP39            160.000         15.557        -96.000

{   63} > $GENERATE 2 JOINTS ID 'TP28',11 X 160.0   Y 15.5575   Z L -64.0 -96.0
{   64} > GENERATE 4 JOINTS ID 'TP7',11   X 192.0   Y 15.5575   Z L 0.0 -32.0 -64.0 -96.0

  /-------   CARTESIAN COORDINATES      FREE, GLOBAL  -------/

     JOINT            X              Y              Z

    TP7             192.000         15.557          0.000
    TP18            192.000         15.557        -32.000
    TP29            192.000         15.557        -64.000
    TP40            192.000         15.557        -96.000
```

```
{   65} > REPEAT 1 ID 1 X INC 29.125

  /-------   CARTESIAN COORDINATES      FREE, GLOBAL  -------/

      JOINT            X              Y              Z

     TP8             221.125         15.557          0.000
     TP19            221.125         15.557        -32.000
     TP30            221.125         15.557        -64.000
     TP41            221.125         15.557        -96.000

{   66} > GENERATE 4 JOINTS ID 'TP9',11   X 230.875 Y 15.5575   Z L 0.0 -32.0 -64.0 -96.0

  /-------   CARTESIAN COORDINATES      FREE, GLOBAL  -------/

      JOINT            X              Y              Z

     TP9             230.875         15.557          0.000
     TP20            230.875         15.557        -32.000
     TP31            230.875         15.557        -64.000
     TP42            230.875         15.557        -96.000

{   67} > REPEAT 1 ID 1 X INC 29.125

  /-------   CARTESIAN COORDINATES      FREE, GLOBAL  -------/

      JOINT            X              Y              Z

     TP10            260.000         15.557          0.000
     TP21            260.000         15.557        -32.000
     TP32            260.000         15.557        -64.000
     TP43            260.000         15.557        -96.000

{   68} > GENERATE 3 JOINTS ID 'TP11',11  X 289.0   Y 15.5575   Z L 0.0 -32.0 -64.0

  /-------   CARTESIAN COORDINATES      FREE, GLOBAL  -------/

      JOINT            X              Y              Z

     TP11            289.000         15.557          0.000
     TP22            289.000         15.557        -32.000
     TP33            289.000         15.557        -64.000

{   69} >
{   70} > GENERATE 1 JOINTS ID 'S1',1     X   -1.375        Z L  -1.625           OFF 'TP1'

  /-------   CARTESIAN COORDINATES      FREE, GLOBAL  -------/
                 OFFSET FROM JOINT TP1

      JOINT            X              Y              Z

     S1              -1.375          0.000         -1.625

{   71} > GENERATE 2 JOINTS ID 'S2',1     X L -1.625 1.625  Z L  -1.625  -1.625   OFF 'TP2'

  /-------   CARTESIAN COORDINATES      FREE, GLOBAL  -------/
                 OFFSET FROM JOINT TP2

      JOINT            X              Y              Z

     S2              -1.625          0.000         -1.625
     S3               1.625          0.000         -1.625

{   72} > REPEAT 1 ID 2 X INC 32.0

  /-------   CARTESIAN COORDINATES      FREE, GLOBAL  -------/
                 OFFSET FROM JOINT TP2

      JOINT            X              Y              Z

     S4              30.375          0.000         -1.625
     S5              33.625          0.000         -1.625

{   73} > GENERATE 1 JOINTS ID 'S6',1     X L -1.625        Z L  -1.625           OFF 'TP4'

  /-------   CARTESIAN COORDINATES      FREE, GLOBAL  -------/
                 OFFSET FROM JOINT TP4

      JOINT            X              Y              Z

     S6              -1.625          0.000         -1.625

{   74} > GENERATE 1 JOINTS ID 'S7',1     X L  1.625        Z L  -1.625           OFF 'TP5'

  /-------   CARTESIAN COORDINATES      FREE, GLOBAL  -------/
                 OFFSET FROM JOINT TP5

      JOINT            X              Y              Z

     S7               1.625          0.000         -1.625

{   75} > GENERATE 1 JOINTS ID 'S8',1     X L -1.625        Z L  -1.625           OFF 'TP6'

  /-------   CARTESIAN COORDINATES      FREE, GLOBAL  -------/
                 OFFSET FROM JOINT TP6
```

```
     JOINT            X              Y              Z

    S8               -1.625          0.000         -1.625

{   76} > GENERATE 1 JOINTS ID 'S9',1     X L  1.625        Z L  -1.625           OFF 'TP7'

  /-------   CARTESIAN COORDINATES      FREE, GLOBAL  -------/
                 OFFSET FROM JOINT TP7

     JOINT            X              Y              Z

    S9                1.625          0.000         -1.625

{   77} > GENERATE 1 JOINTS ID 'S10',1    X L  1.25         Z L  -1.625           OFF 'TP8'

  /-------   CARTESIAN COORDINATES      FREE, GLOBAL  -------/
                 OFFSET FROM JOINT TP8

     JOINT            X              Y              Z

    S10               1.250          0.000         -1.625

{   78} > GENERATE 1 JOINTS ID 'S11',1    X L -1.25         Z L  -1.625           OFF 'TP9'

  /-------   CARTESIAN COORDINATES      FREE, GLOBAL  -------/
                 OFFSET FROM JOINT TP9

     JOINT            X              Y              Z

    S11              -1.250          0.000         -1.625

{   79} > GENERATE 2 JOINTS ID 'S12',1    X L -1.625 1.625  Z L  -1.625  -1.625   OFF 'TP10'

  /-------   CARTESIAN COORDINATES      FREE, GLOBAL  -------/
                 OFFSET FROM JOINT TP10

     JOINT            X              Y              Z

    S12              -1.625          0.000         -1.625
    S13               1.625          0.000         -1.625

{   80} > GENERATE 1 JOINTS ID 'S14',1    X L  1.375        Z L  -1.625           OFF 'TP11'

  /-------   CARTESIAN COORDINATES      FREE, GLOBAL  -------/
                 OFFSET FROM JOINT TP11

     JOINT            X              Y              Z

    S14               1.375          0.000         -1.625

{   81} >
{   82} > GENERATE 1 JOINTS ID 'S15',1    X   -1.375        Z L   1.625           OFF 'TP12'

  /-------   CARTESIAN COORDINATES      FREE, GLOBAL  -------/
                 OFFSET FROM JOINT TP12

     JOINT            X              Y              Z

    S15              -1.375          0.000          1.625

{   83} > GENERATE 2 JOINTS ID 'S16',1    X L -1.625 1.625  Z L   1.625   1.625   OFF 'TP13'

  /-------   CARTESIAN COORDINATES      FREE, GLOBAL  -------/
                 OFFSET FROM JOINT TP13

     JOINT            X              Y              Z

    S16              -1.625          0.000          1.625
    S17               1.625          0.000          1.625

{   84} > REPEAT 1 ID 2 X INC 32.0

  /-------   CARTESIAN COORDINATES      FREE, GLOBAL  -------/
                 OFFSET FROM JOINT TP13

     JOINT            X              Y              Z

    S18              30.375          0.000          1.625
    S19              33.625          0.000          1.625

{   85} > GENERATE 1 JOINTS ID 'S20',1    X L -1.625        Z L   1.625           OFF 'TP15'

  /-------   CARTESIAN COORDINATES      FREE, GLOBAL  -------/
                 OFFSET FROM JOINT TP15

     JOINT            X              Y              Z

    S20              -1.625          0.000          1.625

{   86} > GENERATE 1 JOINTS ID 'S21',1    X L  1.625        Z L   1.625           OFF 'TP16'

  /-------   CARTESIAN COORDINATES      FREE, GLOBAL  -------/
                 OFFSET FROM JOINT TP16

     JOINT            X              Y              Z
```

```
    S21              1.625          0.000          1.625

{   87} > GENERATE 1 JOINTS ID 'S22',1    X L -1.625        Z L   1.625           OFF 'TP17'

  /-------   CARTESIAN COORDINATES      FREE, GLOBAL  -------/
                 OFFSET FROM JOINT TP17

     JOINT           X              Y              Z

    S22             -1.625          0.000          1.625

{   88} > GENERATE 1 JOINTS ID 'S23',1    X    1.625        Z L   1.625           OFF 'TP18'

  /-------   CARTESIAN COORDINATES      FREE, GLOBAL  -------/
                 OFFSET FROM JOINT TP18

     JOINT           X              Y              Z

    S23              1.625          0.000          1.625

{   89} > GENERATE 1 JOINTS ID 'S24',1    X L  1.25         Z L   1.625           OFF 'TP19'

  /-------   CARTESIAN COORDINATES      FREE, GLOBAL  -------/
                 OFFSET FROM JOINT TP19

     JOINT           X              Y              Z

    S24              1.250          0.000          1.625

{   90} > GENERATE 1 JOINTS ID 'S25',1    X   -1.25         Z L   1.625           OFF 'TP20'

  /-------   CARTESIAN COORDINATES      FREE, GLOBAL  -------/
                 OFFSET FROM JOINT TP20

     JOINT           X              Y              Z

    S25             -1.250          0.000          1.625

{   91} > GENERATE 2 JOINTS ID 'S26',1    X L -1.625 1.625  Z L   1.625   1.625   OFF 'TP21'

  /-------   CARTESIAN COORDINATES      FREE, GLOBAL  -------/
                 OFFSET FROM JOINT TP21

     JOINT           X              Y              Z

    S26             -1.625          0.000          1.625
    S27              1.625          0.000          1.625

{   92} > GENERATE 1 JOINTS ID 'S28',1    X L  1.375        Z L   1.625           OFF 'TP22'

  /-------   CARTESIAN COORDINATES      FREE, GLOBAL  -------/
                 OFFSET FROM JOINT TP22

     JOINT           X              Y              Z

    S28              1.375          0.000          1.625

{   93} >
{   94} > GENERATE 1 JOINTS ID 'S29',1    X   -1.375        Z L  -1.625           OFF 'TP12'

  /-------   CARTESIAN COORDINATES      FREE, GLOBAL  -------/
                 OFFSET FROM JOINT TP12

     JOINT           X              Y              Z

    S29             -1.375          0.000         -1.625

{   95} > GENERATE 2 JOINTS ID 'S30',1    X L -1.625 1.625  Z L  -1.625  -1.625   OFF 'TP13'

  /-------   CARTESIAN COORDINATES      FREE, GLOBAL  -------/
                 OFFSET FROM JOINT TP13

     JOINT           X              Y              Z

    S30             -1.625          0.000         -1.625
    S31              1.625          0.000         -1.625

{   96} > REPEAT 5 ID 2 X INC 32.0

  /-------   CARTESIAN COORDINATES      FREE, GLOBAL  -------/
                 OFFSET FROM JOINT TP13

     JOINT           X              Y              Z

    S32             30.375          0.000         -1.625
    S33             33.625          0.000         -1.625

    S34             62.375          0.000         -1.625
    S35             65.625          0.000         -1.625

    S36             94.375          0.000         -1.625
    S37             97.625          0.000         -1.625

    S38            126.375          0.000         -1.625
    S39            129.625          0.000         -1.625
```

```
     S40            158.375          0.000         -1.625
     S41            161.625          0.000         -1.625

{   97} > GENERATE 1 JOINTS ID 'S42',1    X    1.25         Z L  -1.625          OFF 'TP19'

  /-------   CARTESIAN COORDINATES      FREE, GLOBAL  -------/
                 OFFSET FROM JOINT TP19

      JOINT            X              Y              Z

     S42               1.250          0.000         -1.625

{   98} > GENERATE 1 JOINTS ID 'S43',1    X   -1.25         Z L  -1.625          OFF 'TP20'

  /-------   CARTESIAN COORDINATES      FREE, GLOBAL  -------/
                 OFFSET FROM JOINT TP20

      JOINT            X              Y              Z

     S43              -1.250          0.000         -1.625

{   99} > GENERATE 2 JOINTS ID 'S44',1    X L -1.625 1.625  Z L  -1.625  -1.625   OFF 'TP21'

  /-------   CARTESIAN COORDINATES      FREE, GLOBAL  -------/
                 OFFSET FROM JOINT TP21

      JOINT            X              Y              Z

     S44              -1.625          0.000         -1.625
     S45               1.625          0.000         -1.625

{  100} > GENERATE 1 JOINTS ID 'S46',1    X L  1.375       Z L  -1.625          OFF 'TP22'

  /-------   CARTESIAN COORDINATES      FREE, GLOBAL  -------/
                 OFFSET FROM JOINT TP22

      JOINT            X              Y              Z

     S46               1.375          0.000         -1.625

{  101} >
{  102} > GENERATE 1 JOINTS ID 'S47',1    X   -1.375       Z L   1.625          OFF 'TP23'

  /-------   CARTESIAN COORDINATES      FREE, GLOBAL  -------/
                 OFFSET FROM JOINT TP23

      JOINT            X              Y              Z

     S47              -1.375          0.000          1.625

{  103} > GENERATE 2 JOINTS ID 'S48',1    X L -1.625 1.625  Z L   1.625   1.625   OFF 'TP24'

  /-------   CARTESIAN COORDINATES      FREE, GLOBAL  -------/
                 OFFSET FROM JOINT TP24

      JOINT            X              Y              Z

     S48              -1.625          0.000          1.625
     S49               1.625          0.000          1.625

{  104} > REPEAT 5 ID 2 X INC 32.0

  /-------   CARTESIAN COORDINATES      FREE, GLOBAL  -------/
                 OFFSET FROM JOINT TP24

      JOINT            X              Y              Z

     S50              30.375          0.000          1.625
     S51              33.625          0.000          1.625

     S52              62.375          0.000          1.625
     S53              65.625          0.000          1.625

     S54              94.375          0.000          1.625
     S55              97.625          0.000          1.625

     S56             126.375          0.000          1.625
     S57             129.625          0.000          1.625

     S58             158.375          0.000          1.625
     S59             161.625          0.000          1.625

{  105} > GENERATE 1 JOINTS ID 'S60',1    X    1.25         Z L   1.625          OFF 'TP30'

  /-------   CARTESIAN COORDINATES      FREE, GLOBAL  -------/
                 OFFSET FROM JOINT TP30

      JOINT            X              Y              Z

     S60               1.250          0.000          1.625

{  106} > GENERATE 1 JOINTS ID 'S61',1    X   -1.25         Z L   1.625          OFF 'TP31'

  /-------   CARTESIAN COORDINATES      FREE, GLOBAL  -------/
                 OFFSET FROM JOINT TP31
```

```
     JOINT            X              Y              Z

    S61             -1.250          0.000          1.625

{  107} > GENERATE 2 JOINTS ID 'S62',1    X L -1.625 1.625  Z L   1.625   1.625   OFF 'TP32'

  /-------   CARTESIAN COORDINATES      FREE, GLOBAL  -------/
                 OFFSET FROM JOINT TP32

     JOINT            X              Y              Z

    S62             -1.625          0.000          1.625
    S63              1.625          0.000          1.625

{  108} > GENERATE 1 JOINTS ID 'S64',1    X L  1.375        Z L   1.625           OFF 'TP33'

  /-------   CARTESIAN COORDINATES      FREE, GLOBAL  -------/
                 OFFSET FROM JOINT TP33

     JOINT            X              Y              Z

    S64              1.375          0.000          1.625

{  109} >
{  110} > GENERATE 1 JOINTS ID 'S65',1    X    1.625        Z L  -1.625           OFF 'TP24'

  /-------   CARTESIAN COORDINATES      FREE, GLOBAL  -------/
                 OFFSET FROM JOINT TP24

     JOINT            X              Y              Z

    S65              1.625          0.000         -1.625

{  111} > GENERATE 2 JOINTS ID 'S66',1    X L -1.625 1.625  Z L  -1.625  -1.625   OFF 'TP25'

  /-------   CARTESIAN COORDINATES      FREE, GLOBAL  -------/
                 OFFSET FROM JOINT TP25

     JOINT            X              Y              Z

    S66             -1.625          0.000         -1.625
    S67              1.625          0.000         -1.625

{  112} > REPEAT 4 ID 2 X INC 32.0

  /-------   CARTESIAN COORDINATES      FREE, GLOBAL  -------/
                 OFFSET FROM JOINT TP25

     JOINT            X              Y              Z

    S68             30.375          0.000         -1.625
    S69             33.625          0.000         -1.625

    S70             62.375          0.000         -1.625
    S71             65.625          0.000         -1.625

    S72             94.375          0.000         -1.625
    S73             97.625          0.000         -1.625

    S74            126.375          0.000         -1.625
    S75            129.625          0.000         -1.625

{  113} > GENERATE 1 JOINTS ID 'S76',1    X    1.25         Z L  -1.625           OFF 'TP30'

  /-------   CARTESIAN COORDINATES      FREE, GLOBAL  -------/
                 OFFSET FROM JOINT TP30

     JOINT            X              Y              Z

    S76              1.250          0.000         -1.625

{  114} > GENERATE 1 JOINTS ID 'S77',1    X  -1.25         Z L  -1.625           OFF 'TP31'

  /-------   CARTESIAN COORDINATES      FREE, GLOBAL  -------/
                 OFFSET FROM JOINT TP31

     JOINT            X              Y              Z

    S77             -1.250          0.000         -1.625

{  115} > GENERATE 1 JOINTS ID 'S78',1    X L -1.625        Z L  -1.625           OFF 'TP32'

  /-------   CARTESIAN COORDINATES      FREE, GLOBAL  -------/
                 OFFSET FROM JOINT TP32

     JOINT            X              Y              Z

    S78             -1.625          0.000         -1.625

{  116} >
{  117} > GENERATE 1 JOINTS ID 'S79',1    X    1.625        Z L   1.625           OFF 'TP35'

  /-------   CARTESIAN COORDINATES      FREE, GLOBAL  -------/
                 OFFSET FROM JOINT TP35

     JOINT            X              Y              Z
```

```
    S79              1.625          0.000          1.625

{  118} > GENERATE 2 JOINTS ID 'S80',1    X L -1.625 1.625  Z L   1.625   1.625   OFF 'TP36'

  /-------   CARTESIAN COORDINATES      FREE, GLOBAL  -------/
                 OFFSET FROM JOINT TP36

     JOINT            X              Y              Z

    S80             -1.625          0.000          1.625
    S81              1.625          0.000          1.625

{  119} > REPEAT 4 ID 2 X INC 32.0

  /-------   CARTESIAN COORDINATES      FREE, GLOBAL  -------/
                 OFFSET FROM JOINT TP36

     JOINT            X              Y              Z

    S82             30.375          0.000          1.625
    S83             33.625          0.000          1.625

    S84             62.375          0.000          1.625
    S85             65.625          0.000          1.625

    S86             94.375          0.000          1.625
    S87             97.625          0.000          1.625

    S88            126.375          0.000          1.625
    S89            129.625          0.000          1.625

{  120} > GENERATE 1 JOINTS ID 'S90',1    X    1.25         Z L   1.625           OFF 'TP41'

  /-------   CARTESIAN COORDINATES      FREE, GLOBAL  -------/
                 OFFSET FROM JOINT TP41

     JOINT            X              Y              Z

    S90              1.250          0.000          1.625

{  121} > GENERATE 1 JOINTS ID 'S91',1    X   -1.25         Z L   1.625           OFF 'TP42'

  /-------   CARTESIAN COORDINATES      FREE, GLOBAL  -------/
                 OFFSET FROM JOINT TP42

     JOINT            X              Y              Z

    S91             -1.250          0.000          1.625

{  122} > GENERATE 1 JOINTS ID 'S92',1    X L -1.625        Z L   1.625           OFF 'TP43'

  /-------   CARTESIAN COORDINATES      FREE, GLOBAL  -------/
                 OFFSET FROM JOINT TP43

     JOINT            X              Y              Z

    S92             -1.625          0.000          1.625

{  123} >
{  124} > $================================STUD RIGID NODES=========================================
{  125} > GENERATE 1 JOINTS ID 'SR1',1   X   -1.375        Y 0.375  Z L  -1.625          OFF 'TP1'

  /-------   CARTESIAN COORDINATES      FREE, GLOBAL  -------/
                 OFFSET FROM JOINT TP1

     JOINT            X              Y              Z

    SR1             -1.375          0.375         -1.625

{  126} > GENERATE 2 JOINTS ID 'SR2',1   X L -1.625 1.625  Y 0.375  Z L  -1.625  -1.625  OFF 'TP2'

  /-------   CARTESIAN COORDINATES      FREE, GLOBAL  -------/
                 OFFSET FROM JOINT TP2

     JOINT            X              Y              Z

    SR2             -1.625          0.375         -1.625
    SR3              1.625          0.375         -1.625

{  127} > REPEAT 1 ID 2 X INC 32.0

  /-------   CARTESIAN COORDINATES      FREE, GLOBAL  -------/
                 OFFSET FROM JOINT TP2

     JOINT            X              Y              Z

    SR4             30.375          0.375         -1.625
    SR5             33.625          0.375         -1.625

{  128} > GENERATE 1 JOINTS ID 'SR6',1   X L -1.625        Y 0.375  Z L  -1.625          OFF 'TP4'

  /-------   CARTESIAN COORDINATES      FREE, GLOBAL  -------/
                 OFFSET FROM JOINT TP4

     JOINT            X              Y              Z
```

```
    SR6              -1.625          0.375         -1.625

{  129} > GENERATE 1 JOINTS ID 'SR7',1   X L  1.625        Y 0.375  Z L  -1.625          OFF 'TP5'

  /-------   CARTESIAN COORDINATES      FREE, GLOBAL  -------/
                 OFFSET FROM JOINT TP5

     JOINT            X              Y              Z

    SR7               1.625          0.375         -1.625

{  130} > GENERATE 1 JOINTS ID 'SR8',1   X L -1.625        Y 0.375  Z L  -1.625          OFF 'TP6'

  /-------   CARTESIAN COORDINATES      FREE, GLOBAL  -------/
                 OFFSET FROM JOINT TP6

     JOINT            X              Y              Z

    SR8              -1.625          0.375         -1.625

{  131} > GENERATE 1 JOINTS ID 'SR9',1   X L  1.625        Y 0.375  Z L  -1.625          OFF 'TP7'

  /-------   CARTESIAN COORDINATES      FREE, GLOBAL  -------/
                 OFFSET FROM JOINT TP7

     JOINT            X              Y              Z

    SR9               1.625          0.375         -1.625

{  132} > GENERATE 1 JOINTS ID 'SR10',1  X L  1.25         Y 0.375  Z L  -1.625          OFF 'TP8'

  /-------   CARTESIAN COORDINATES      FREE, GLOBAL  -------/
                 OFFSET FROM JOINT TP8

     JOINT            X              Y              Z

    SR10              1.250          0.375         -1.625

{  133} > GENERATE 1 JOINTS ID 'SR11',1  X L -1.25         Y 0.375  Z L  -1.625          OFF 'TP9'

  /-------   CARTESIAN COORDINATES      FREE, GLOBAL  -------/
                 OFFSET FROM JOINT TP9

     JOINT            X              Y              Z

    SR11             -1.250          0.375         -1.625

{  134} > GENERATE 2 JOINTS ID 'SR12',1  X L -1.625 1.625  Y 0.375  Z L  -1.625  -1.625  OFF 'TP10'

  /-------   CARTESIAN COORDINATES      FREE, GLOBAL  -------/
                 OFFSET FROM JOINT TP10

     JOINT            X              Y              Z

    SR12             -1.625          0.375         -1.625
    SR13              1.625          0.375         -1.625

{  135} > GENERATE 1 JOINTS ID 'SR14',1  X L  1.375        Y 0.375  Z L  -1.625          OFF 'TP11'

  /-------   CARTESIAN COORDINATES      FREE, GLOBAL  -------/
                 OFFSET FROM JOINT TP11

     JOINT            X              Y              Z

    SR14              1.375          0.375         -1.625

{  136} >
{  137} > GENERATE 1 JOINTS ID 'SR15',1  X   -1.375        Y 0.375  Z L   1.625          OFF 'TP12'

  /-------   CARTESIAN COORDINATES      FREE, GLOBAL  -------/
                 OFFSET FROM JOINT TP12

     JOINT            X              Y              Z

    SR15             -1.375          0.375          1.625

{  138} > GENERATE 2 JOINTS ID 'SR16',1  X L -1.625 1.625  Y 0.375  Z L   1.625   1.625  OFF 'TP13'

  /-------   CARTESIAN COORDINATES      FREE, GLOBAL  -------/
                 OFFSET FROM JOINT TP13

     JOINT            X              Y              Z

    SR16             -1.625          0.375          1.625
    SR17              1.625          0.375          1.625

{  139} > REPEAT 1 ID 2 X INC 32.0

  /-------   CARTESIAN COORDINATES      FREE, GLOBAL  -------/
                 OFFSET FROM JOINT TP13

     JOINT            X              Y              Z

    SR18             30.375          0.375          1.625
    SR19             33.625          0.375          1.625
```

```
{  140} > GENERATE 1 JOINTS ID 'SR20',1  X L -1.625        Y 0.375  Z L   1.625          OFF 'TP15'

  /-------   CARTESIAN COORDINATES      FREE, GLOBAL  -------/
                 OFFSET FROM JOINT TP15

      JOINT            X              Y              Z

     SR20            -1.625          0.375          1.625

{  141} > GENERATE 1 JOINTS ID 'SR21',1  X L  1.625        Y 0.375  Z L   1.625          OFF 'TP16'

  /-------   CARTESIAN COORDINATES      FREE, GLOBAL  -------/
                 OFFSET FROM JOINT TP16

      JOINT            X              Y              Z

     SR21             1.625          0.375          1.625

{  142} > GENERATE 1 JOINTS ID 'SR22',1  X L -1.625        Y 0.375  Z L   1.625          OFF 'TP17'

  /-------   CARTESIAN COORDINATES      FREE, GLOBAL  -------/
                 OFFSET FROM JOINT TP17

      JOINT            X              Y              Z

     SR22            -1.625          0.375          1.625

{  143} > GENERATE 1 JOINTS ID 'SR23',1  X L  1.625        Y 0.375  Z L   1.625          OFF 'TP18'

  /-------   CARTESIAN COORDINATES      FREE, GLOBAL  -------/
                 OFFSET FROM JOINT TP18

      JOINT            X              Y              Z

     SR23             1.625          0.375          1.625

{  144} > GENERATE 1 JOINTS ID 'SR24',1  X L  1.25         Y 0.375  Z L   1.625          OFF 'TP19'

  /-------   CARTESIAN COORDINATES      FREE, GLOBAL  -------/
                 OFFSET FROM JOINT TP19

      JOINT            X              Y              Z

     SR24             1.250          0.375          1.625

{  145} > GENERATE 1 JOINTS ID 'SR25',1  X   -1.25        Y 0.375  Z L   1.625          OFF 'TP20'

  /-------   CARTESIAN COORDINATES      FREE, GLOBAL  -------/
                 OFFSET FROM JOINT TP20

      JOINT            X              Y              Z

     SR25            -1.250          0.375          1.625

{  146} > GENERATE 2 JOINTS ID 'SR26',1  X L -1.625 1.625  Y 0.375  Z L   1.625   1.625  OFF 'TP21'

  /-------   CARTESIAN COORDINATES      FREE, GLOBAL  -------/
                 OFFSET FROM JOINT TP21

      JOINT            X              Y              Z

     SR26            -1.625          0.375          1.625
     SR27             1.625          0.375          1.625

{  147} > GENERATE 1 JOINTS ID 'SR28',1  X L  1.375        Y 0.375  Z L   1.625          OFF 'TP22'

  /-------   CARTESIAN COORDINATES      FREE, GLOBAL  -------/
                 OFFSET FROM JOINT TP22

      JOINT            X              Y              Z

     SR28             1.375          0.375          1.625

{  148} >
{  149} > GENERATE 1 JOINTS ID 'SR29',1  X   -1.375        Y 0.375  Z L  -1.625          OFF 'TP12'

  /-------   CARTESIAN COORDINATES      FREE, GLOBAL  -------/
                 OFFSET FROM JOINT TP12

      JOINT            X              Y              Z

     SR29            -1.375          0.375         -1.625

{  150} > GENERATE 2 JOINTS ID 'SR30',1  X L -1.625 1.625  Y 0.375  Z L  -1.625  -1.625  OFF 'TP13'

  /-------   CARTESIAN COORDINATES      FREE, GLOBAL  -------/
                 OFFSET FROM JOINT TP13

      JOINT            X              Y              Z

     SR30            -1.625          0.375         -1.625
     SR31             1.625          0.375         -1.625

{  151} > REPEAT 5 ID 2 X INC 32.0
```

```
  /-------   CARTESIAN COORDINATES      FREE, GLOBAL  -------/
                 OFFSET FROM JOINT TP13

     JOINT            X              Y              Z

    SR32            30.375         0.375         -1.625
    SR33            33.625         0.375         -1.625

    SR34            62.375         0.375         -1.625
    SR35            65.625         0.375         -1.625

    SR36            94.375         0.375         -1.625
    SR37            97.625         0.375         -1.625

    SR38           126.375         0.375         -1.625
    SR39           129.625         0.375         -1.625

    SR40           158.375         0.375         -1.625
    SR41           161.625         0.375         -1.625

{  152} > GENERATE 1 JOINTS ID 'SR42',1  X    1.25         Y 0.375  Z L  -1.625          OFF 'TP19'

  /-------   CARTESIAN COORDINATES      FREE, GLOBAL  -------/
                 OFFSET FROM JOINT TP19

     JOINT            X              Y              Z

    SR42             1.250         0.375         -1.625

{  153} > GENERATE 1 JOINTS ID 'SR43',1  X   -1.25         Y 0.375  Z L  -1.625          OFF 'TP20'

  /-------   CARTESIAN COORDINATES      FREE, GLOBAL  -------/
                 OFFSET FROM JOINT TP20

     JOINT            X              Y              Z

    SR43            -1.250         0.375         -1.625

{  154} > GENERATE 2 JOINTS ID 'SR44',1  X L -1.625 1.625  Y 0.375  Z L  -1.625  -1.625  OFF 'TP21'

  /-------   CARTESIAN COORDINATES      FREE, GLOBAL  -------/
                 OFFSET FROM JOINT TP21

     JOINT            X              Y              Z

    SR44            -1.625         0.375         -1.625
    SR45             1.625         0.375         -1.625

{  155} > GENERATE 1 JOINTS ID 'SR46',1  X L  1.375        Y 0.375  Z L  -1.625          OFF 'TP22'

  /-------   CARTESIAN COORDINATES      FREE, GLOBAL  -------/
                 OFFSET FROM JOINT TP22

     JOINT            X              Y              Z

    SR46             1.375         0.375         -1.625

{  156} >
{  157} > GENERATE 1 JOINTS ID 'SR47',1  X   -1.375        Y 0.375  Z L   1.625          OFF 'TP23'

  /-------   CARTESIAN COORDINATES      FREE, GLOBAL  -------/
                 OFFSET FROM JOINT TP23

     JOINT            X              Y              Z

    SR47            -1.375         0.375          1.625

{  158} > GENERATE 2 JOINTS ID 'SR48',1  X L -1.625 1.625  Y 0.375  Z L   1.625   1.625  OFF 'TP24'

  /-------   CARTESIAN COORDINATES      FREE, GLOBAL  -------/
                 OFFSET FROM JOINT TP24

     JOINT            X              Y              Z

    SR48            -1.625         0.375          1.625
    SR49             1.625         0.375          1.625

{  159} > REPEAT 5 ID 2 X INC 32.0

  /-------   CARTESIAN COORDINATES      FREE, GLOBAL  -------/
                 OFFSET FROM JOINT TP24

     JOINT            X              Y              Z

    SR50            30.375         0.375          1.625
    SR51            33.625         0.375          1.625

    SR52            62.375         0.375          1.625
    SR53            65.625         0.375          1.625

    SR54            94.375         0.375          1.625
    SR55            97.625         0.375          1.625

    SR56           126.375         0.375          1.625
    SR57           129.625         0.375          1.625
```

```
     SR58            158.375          0.375          1.625
     SR59            161.625          0.375          1.625

{  160} > GENERATE 1 JOINTS ID 'SR60',1  X    1.25         Y 0.375  Z L   1.625          OFF 'TP30'

  /-------   CARTESIAN COORDINATES      FREE, GLOBAL  -------/
                 OFFSET FROM JOINT TP30

      JOINT            X              Y              Z

     SR60              1.250          0.375          1.625

{  161} > GENERATE 1 JOINTS ID 'SR61',1  X   -1.25         Y 0.375  Z L   1.625          OFF 'TP31'

  /-------   CARTESIAN COORDINATES      FREE, GLOBAL  -------/
                 OFFSET FROM JOINT TP31

      JOINT            X              Y              Z

     SR61             -1.250          0.375          1.625

{  162} > GENERATE 2 JOINTS ID 'SR62',1  X L -1.625 1.625  Y 0.375  Z L   1.625   1.625  OFF 'TP32'

  /-------   CARTESIAN COORDINATES      FREE, GLOBAL  -------/
                 OFFSET FROM JOINT TP32

      JOINT            X              Y              Z

     SR62             -1.625          0.375          1.625
     SR63              1.625          0.375          1.625

{  163} > GENERATE 1 JOINTS ID 'SR64',1  X L  1.375        Y 0.375  Z L   1.625          OFF 'TP33'

  /-------   CARTESIAN COORDINATES      FREE, GLOBAL  -------/
                 OFFSET FROM JOINT TP33

      JOINT            X              Y              Z

     SR64              1.375          0.375          1.625

{  164} >
{  165} > GENERATE 1 JOINTS ID 'SR65',1  X    1.625        Y 0.375  Z L  -1.625          OFF 'TP24'

  /-------   CARTESIAN COORDINATES      FREE, GLOBAL  -------/
                 OFFSET FROM JOINT TP24

      JOINT            X              Y              Z

     SR65              1.625          0.375         -1.625

{  166} > GENERATE 2 JOINTS ID 'SR66',1  X L -1.625 1.625  Y 0.375  Z L  -1.625  -1.625  OFF 'TP25'

  /-------   CARTESIAN COORDINATES      FREE, GLOBAL  -------/
                 OFFSET FROM JOINT TP25

      JOINT            X              Y              Z

     SR66             -1.625          0.375         -1.625
     SR67              1.625          0.375         -1.625

{  167} > REPEAT 4 ID 2 X INC 32.0

  /-------   CARTESIAN COORDINATES      FREE, GLOBAL  -------/
                 OFFSET FROM JOINT TP25

      JOINT            X              Y              Z

     SR68             30.375          0.375         -1.625
     SR69             33.625          0.375         -1.625

     SR70             62.375          0.375         -1.625
     SR71             65.625          0.375         -1.625

     SR72             94.375          0.375         -1.625
     SR73             97.625          0.375         -1.625

     SR74            126.375          0.375         -1.625
     SR75            129.625          0.375         -1.625

{  168} > GENERATE 1 JOINTS ID 'SR76',1  X    1.25         Y 0.375  Z L  -1.625          OFF 'TP30'

  /-------   CARTESIAN COORDINATES      FREE, GLOBAL  -------/
                 OFFSET FROM JOINT TP30

      JOINT            X              Y              Z

     SR76              1.250          0.375         -1.625

{  169} > GENERATE 1 JOINTS ID 'SR77',1  X   -1.25         Y 0.375  Z L  -1.625          OFF 'TP31'

  /-------   CARTESIAN COORDINATES      FREE, GLOBAL  -------/
                 OFFSET FROM JOINT TP31

      JOINT            X              Y              Z

     SR77             -1.250          0.375         -1.625
```

```
{  170} > GENERATE 1 JOINTS ID 'SR78',1  X L -1.625        Y 0.375  Z L  -1.625          OFF 'TP32'

  /-------   CARTESIAN COORDINATES      FREE, GLOBAL  -------/
                 OFFSET FROM JOINT TP32

      JOINT            X              Y              Z

     SR78            -1.625          0.375         -1.625

{  171} >
{  172} > GENERATE 1 JOINTS ID 'SR79',1  X    1.625        Y 0.375  Z L   1.625          OFF 'TP35'

  /-------   CARTESIAN COORDINATES      FREE, GLOBAL  -------/
                 OFFSET FROM JOINT TP35

      JOINT            X              Y              Z

     SR79             1.625          0.375          1.625

{  173} > GENERATE 2 JOINTS ID 'SR80',1  X L -1.625 1.625  Y 0.375  Z L   1.625   1.625  OFF 'TP36'

  /-------   CARTESIAN COORDINATES      FREE, GLOBAL  -------/
                 OFFSET FROM JOINT TP36

      JOINT            X              Y              Z

     SR80            -1.625          0.375          1.625
     SR81             1.625          0.375          1.625

{  174} > REPEAT 4 ID 2 X INC 32.0

  /-------   CARTESIAN COORDINATES      FREE, GLOBAL  -------/
                 OFFSET FROM JOINT TP36

      JOINT            X              Y              Z

     SR82            30.375          0.375          1.625
     SR83            33.625          0.375          1.625

     SR84            62.375          0.375          1.625
     SR85            65.625          0.375          1.625

     SR86            94.375          0.375          1.625
     SR87            97.625          0.375          1.625

     SR88           126.375          0.375          1.625
     SR89           129.625          0.375          1.625

{  175} > GENERATE 1 JOINTS ID 'SR90',1  X    1.25         Y 0.375  Z L   1.625          OFF 'TP41'

  /-------   CARTESIAN COORDINATES      FREE, GLOBAL  -------/
                 OFFSET FROM JOINT TP41

      JOINT            X              Y              Z

     SR90             1.250          0.375          1.625

{  176} > GENERATE 1 JOINTS ID 'SR91',1  X   -1.25         Y 0.375  Z L   1.625          OFF 'TP42'

  /-------   CARTESIAN COORDINATES      FREE, GLOBAL  -------/
                 OFFSET FROM JOINT TP42

      JOINT            X              Y              Z

     SR91            -1.250          0.375          1.625

{  177} > GENERATE 1 JOINTS ID 'SR92',1  X L -1.625        Y 0.375  Z L   1.625          OFF 'TP43'

  /-------   CARTESIAN COORDINATES      FREE, GLOBAL  -------/
                 OFFSET FROM JOINT TP43

      JOINT            X              Y              Z

     SR92            -1.625          0.375          1.625

{  178} >
{  179} > GENERATE 1 JOINTS ID 'S93',1  X    1.625        Y 0.375  Z     -1.625         OFF 'TP4'

  /-------   CARTESIAN COORDINATES      FREE, GLOBAL  -------/
                 OFFSET FROM JOINT TP4

      JOINT            X              Y              Z

     S93              1.625          0.375         -1.625

{  180} > GENERATE 1 JOINTS ID 'S94',1  X   -1.625        Y 0.375  Z     -1.625         OFF 'TP5'

  /-------   CARTESIAN COORDINATES      FREE, GLOBAL  -------/
                 OFFSET FROM JOINT TP5

      JOINT            X              Y              Z

     S94             -1.625          0.375         -1.625

{  181} > GENERATE 1 JOINTS ID 'S95',1  X    1.625        Y 0.375  Z     -1.625         OFF 'TP6'
```

```
  /-------   CARTESIAN COORDINATES      FREE, GLOBAL  -------/
                 OFFSET FROM JOINT TP6

     JOINT            X              Y              Z

    S95               1.625          0.375         -1.625

{  182} > GENERATE 1 JOINTS ID 'S96',1  X   -1.625        Y 0.375  Z     -1.625         OFF 'TP7'

  /-------   CARTESIAN COORDINATES      FREE, GLOBAL  -------/
                 OFFSET FROM JOINT TP7

     JOINT            X              Y              Z

    S96              -1.625          0.375         -1.625

{  183} > GENERATE 1 JOINTS ID 'S97',1  X    1.625        Y 0.375  Z      1.625         OFF 'TP15'

  /-------   CARTESIAN COORDINATES      FREE, GLOBAL  -------/
                 OFFSET FROM JOINT TP15

     JOINT            X              Y              Z

    S97               1.625          0.375          1.625

{  184} > GENERATE 1 JOINTS ID 'S98',1  X   -1.625        Y 0.375  Z      1.625         OFF 'TP16'

  /-------   CARTESIAN COORDINATES      FREE, GLOBAL  -------/
                 OFFSET FROM JOINT TP16

     JOINT            X              Y              Z

    S98              -1.625          0.375          1.625

{  185} > GENERATE 1 JOINTS ID 'S99',1  X    1.625        Y 0.375  Z      1.625         OFF 'TP17'

  /-------   CARTESIAN COORDINATES      FREE, GLOBAL  -------/
                 OFFSET FROM JOINT TP17

     JOINT            X              Y              Z

    S99               1.625          0.375          1.625

{  186} > GENERATE 1 JOINTS ID 'S100',1 X   -1.625        Y 0.375  Z      1.625         OFF 'TP18'

  /-------   CARTESIAN COORDINATES      FREE, GLOBAL  -------/
                 OFFSET FROM JOINT TP18

     JOINT            X              Y              Z

    S100             -1.625          0.375          1.625

{  187} >
{  188} > $=========================STUD RIGID NODES=====================================
{  189} > GENERATE 1 JOINTS ID 'SR101',1  X   -1.375        Y 0.375  Z L  -1.625          OFF 'TP1'

  /-------   CARTESIAN COORDINATES      FREE, GLOBAL  -------/
                 OFFSET FROM JOINT TP1

     JOINT            X              Y              Z

    SR101            -1.375          0.375         -1.625

{  190} > GENERATE 2 JOINTS ID 'SR102',1  X L -1.625 1.625  Y 0.375  Z L  -1.625  -1.625  OFF 'TP2'

  /-------   CARTESIAN COORDINATES      FREE, GLOBAL  -------/
                 OFFSET FROM JOINT TP2

     JOINT            X              Y              Z

    SR102            -1.625          0.375         -1.625
    SR103             1.625          0.375         -1.625

{  191} > REPEAT 1 ID 2 X INC 32.0

  /-------   CARTESIAN COORDINATES      FREE, GLOBAL  -------/
                 OFFSET FROM JOINT TP2

     JOINT            X              Y              Z

    SR104            30.375          0.375         -1.625
    SR105            33.625          0.375         -1.625

{  192} > GENERATE 1 JOINTS ID 'SR106',1  X L -1.625        Y 0.375  Z L  -1.625          OFF 'TP4'

  /-------   CARTESIAN COORDINATES      FREE, GLOBAL  -------/
                 OFFSET FROM JOINT TP4

     JOINT            X              Y              Z

    SR106            -1.625          0.375         -1.625

{  193} > GENERATE 1 JOINTS ID 'SR107',1  X L  1.625        Y 0.375  Z L  -1.625          OFF 'TP5'

  /-------   CARTESIAN COORDINATES      FREE, GLOBAL  -------/
```

```
                OFFSET FROM JOINT TP5

     JOINT            X              Y              Z

    SR107            1.625          0.375         -1.625

{  194} > GENERATE 1 JOINTS ID 'SR108',1  X L -1.625        Y 0.375  Z L  -1.625          OFF 'TP6'

  /-------   CARTESIAN COORDINATES      FREE, GLOBAL  -------/
                OFFSET FROM JOINT TP6

     JOINT            X              Y              Z

    SR108           -1.625          0.375         -1.625

{  195} > GENERATE 1 JOINTS ID 'SR109',1  X L  1.625        Y 0.375  Z L  -1.625          OFF 'TP7'

  /-------   CARTESIAN COORDINATES      FREE, GLOBAL  -------/
                OFFSET FROM JOINT TP7

     JOINT            X              Y              Z

    SR109            1.625          0.375         -1.625

{  196} > GENERATE 1 JOINTS ID 'SR110',1  X L  1.25         Y 0.375  Z L  -1.625          OFF 'TP8'

  /-------   CARTESIAN COORDINATES      FREE, GLOBAL  -------/
                OFFSET FROM JOINT TP8

     JOINT            X              Y              Z

    SR110            1.250          0.375         -1.625

{  197} > GENERATE 1 JOINTS ID 'SR111',1  X L -1.25         Y 0.375  Z L  -1.625          OFF 'TP9'

  /-------   CARTESIAN COORDINATES      FREE, GLOBAL  -------/
                OFFSET FROM JOINT TP9

     JOINT            X              Y              Z

    SR111           -1.250          0.375         -1.625

{  198} > GENERATE 2 JOINTS ID 'SR112',1  X L -1.625 1.625  Y 0.375  Z L  -1.625  -1.625  OFF 'TP10'

  /-------   CARTESIAN COORDINATES      FREE, GLOBAL  -------/
                OFFSET FROM JOINT TP10

     JOINT            X              Y              Z

    SR112           -1.625          0.375         -1.625
    SR113            1.625          0.375         -1.625

{  199} > GENERATE 1 JOINTS ID 'SR114',1  X L  1.375        Y 0.375  Z L  -1.625          OFF 'TP11'

  /-------   CARTESIAN COORDINATES      FREE, GLOBAL  -------/
                OFFSET FROM JOINT TP11

     JOINT            X              Y              Z

    SR114            1.375          0.375         -1.625

{  200} >
{  201} > GENERATE 1 JOINTS ID 'SR115',1  X   -1.375        Y 0.375  Z L   1.625          OFF 'TP12'

  /-------   CARTESIAN COORDINATES      FREE, GLOBAL  -------/
                OFFSET FROM JOINT TP12

     JOINT            X              Y              Z

    SR115           -1.375          0.375          1.625

{  202} > GENERATE 2 JOINTS ID 'SR116',1  X L -1.625 1.625  Y 0.375  Z L   1.625   1.625  OFF 'TP13'

  /-------   CARTESIAN COORDINATES      FREE, GLOBAL  -------/
                OFFSET FROM JOINT TP13

     JOINT            X              Y              Z

    SR116           -1.625          0.375          1.625
    SR117            1.625          0.375          1.625

{  203} > REPEAT 1 ID 2 X INC 32.0

  /-------   CARTESIAN COORDINATES      FREE, GLOBAL  -------/
                OFFSET FROM JOINT TP13

     JOINT            X              Y              Z

    SR118           30.375          0.375          1.625
    SR119           33.625          0.375          1.625

{  204} > GENERATE 1 JOINTS ID 'SR120',1  X L -1.625        Y 0.375  Z L   1.625          OFF 'TP15'

  /-------   CARTESIAN COORDINATES      FREE, GLOBAL  -------/
                OFFSET FROM JOINT TP15
```

```
     JOINT            X              Y              Z

    SR120           -1.625          0.375          1.625

{  205} > GENERATE 1 JOINTS ID 'SR121',1  X L  1.625        Y 0.375  Z L   1.625          OFF 'TP16'

  /-------   CARTESIAN COORDINATES      FREE, GLOBAL  -------/
                 OFFSET FROM JOINT TP16

     JOINT            X              Y              Z

    SR121            1.625          0.375          1.625

{  206} > GENERATE 1 JOINTS ID 'SR122',1  X L -1.625        Y 0.375  Z L   1.625          OFF 'TP17'

  /-------   CARTESIAN COORDINATES      FREE, GLOBAL  -------/
                 OFFSET FROM JOINT TP17

     JOINT            X              Y              Z

    SR122           -1.625          0.375          1.625

{  207} > GENERATE 1 JOINTS ID 'SR123',1  X L  1.625        Y 0.375  Z L   1.625          OFF 'TP18'

  /-------   CARTESIAN COORDINATES      FREE, GLOBAL  -------/
                 OFFSET FROM JOINT TP18

     JOINT            X              Y              Z

    SR123            1.625          0.375          1.625

{  208} > GENERATE 1 JOINTS ID 'SR124',1  X L  1.25         Y 0.375  Z L   1.625          OFF 'TP19'

  /-------   CARTESIAN COORDINATES      FREE, GLOBAL  -------/
                 OFFSET FROM JOINT TP19

     JOINT            X              Y              Z

    SR124            1.250          0.375          1.625

{  209} > GENERATE 1 JOINTS ID 'SR125',1  X   -1.25        Y 0.375  Z L   1.625          OFF 'TP20'

  /-------   CARTESIAN COORDINATES      FREE, GLOBAL  -------/
                 OFFSET FROM JOINT TP20

     JOINT            X              Y              Z

    SR125           -1.250          0.375          1.625

{  210} > GENERATE 2 JOINTS ID 'SR126',1  X L -1.625 1.625  Y 0.375  Z L   1.625   1.625  OFF 'TP21'

  /-------   CARTESIAN COORDINATES      FREE, GLOBAL  -------/
                 OFFSET FROM JOINT TP21

     JOINT            X              Y              Z

    SR126           -1.625          0.375          1.625
    SR127            1.625          0.375          1.625

{  211} > GENERATE 1 JOINTS ID 'SR128',1  X L  1.375        Y 0.375  Z L   1.625          OFF 'TP22'

  /-------   CARTESIAN COORDINATES      FREE, GLOBAL  -------/
                 OFFSET FROM JOINT TP22

     JOINT            X              Y              Z

    SR128            1.375          0.375          1.625

{  212} >
{  213} > GENERATE 1 JOINTS ID 'SR129',1  X   -1.375        Y 0.375  Z L  -1.625          OFF 'TP12'

  /-------   CARTESIAN COORDINATES      FREE, GLOBAL  -------/
                 OFFSET FROM JOINT TP12

     JOINT            X              Y              Z

    SR129           -1.375          0.375         -1.625

{  214} > GENERATE 2 JOINTS ID 'SR130',1  X L -1.625 1.625  Y 0.375  Z L  -1.625  -1.625  OFF 'TP13'

  /-------   CARTESIAN COORDINATES      FREE, GLOBAL  -------/
                 OFFSET FROM JOINT TP13

     JOINT            X              Y              Z

    SR130           -1.625          0.375         -1.625
    SR131            1.625          0.375         -1.625

{  215} > REPEAT 5 ID 2 X INC 32.0

  /-------   CARTESIAN COORDINATES      FREE, GLOBAL  -------/
                 OFFSET FROM JOINT TP13

     JOINT            X              Y              Z

    SR132           30.375          0.375         -1.625
```

```
    SR133          33.625         0.375         -1.625

    SR134          62.375         0.375         -1.625
    SR135          65.625         0.375         -1.625

    SR136          94.375         0.375         -1.625
    SR137          97.625         0.375         -1.625

    SR138         126.375         0.375         -1.625
    SR139         129.625         0.375         -1.625

    SR140         158.375         0.375         -1.625
    SR141         161.625         0.375         -1.625

{  216} > GENERATE 1 JOINTS ID 'SR142',1  X    1.25         Y 0.375  Z L  -1.625          OFF 'TP19'

  /-------   CARTESIAN COORDINATES      FREE, GLOBAL  -------/
                 OFFSET FROM JOINT TP19

     JOINT           X              Y              Z

    SR142          1.250          0.375         -1.625

{  217} > GENERATE 1 JOINTS ID 'SR143',1  X   -1.25         Y 0.375  Z L  -1.625          OFF 'TP20'

  /-------   CARTESIAN COORDINATES      FREE, GLOBAL  -------/
                 OFFSET FROM JOINT TP20

     JOINT           X              Y              Z

    SR143         -1.250          0.375         -1.625

{  218} > GENERATE 2 JOINTS ID 'SR144',1  X L -1.625 1.625  Y 0.375  Z L  -1.625  -1.625  OFF 'TP21'

  /-------   CARTESIAN COORDINATES      FREE, GLOBAL  -------/
                 OFFSET FROM JOINT TP21

     JOINT           X              Y              Z

    SR144         -1.625          0.375         -1.625
    SR145          1.625          0.375         -1.625

{  219} > GENERATE 1 JOINTS ID 'SR146',1  X L  1.375        Y 0.375  Z L  -1.625          OFF 'TP22'

  /-------   CARTESIAN COORDINATES      FREE, GLOBAL  -------/
                 OFFSET FROM JOINT TP22

     JOINT           X              Y              Z

    SR146          1.375          0.375         -1.625

{  220} >
{  221} > GENERATE 1 JOINTS ID 'SR147',1  X   -1.375        Y 0.375  Z L   1.625          OFF 'TP23'

  /-------   CARTESIAN COORDINATES      FREE, GLOBAL  -------/
                 OFFSET FROM JOINT TP23

     JOINT           X              Y              Z

    SR147         -1.375          0.375          1.625

{  222} > GENERATE 2 JOINTS ID 'SR148',1  X L -1.625 1.625  Y 0.375  Z L   1.625   1.625  OFF 'TP24'

  /-------   CARTESIAN COORDINATES      FREE, GLOBAL  -------/
                 OFFSET FROM JOINT TP24

     JOINT           X              Y              Z

    SR148         -1.625          0.375          1.625
    SR149          1.625          0.375          1.625

{  223} > REPEAT 5 ID 2 X INC 32.0

  /-------   CARTESIAN COORDINATES      FREE, GLOBAL  -------/
                 OFFSET FROM JOINT TP24

     JOINT           X              Y              Z

    SR150         30.375          0.375          1.625
    SR151         33.625          0.375          1.625

    SR152         62.375          0.375          1.625
    SR153         65.625          0.375          1.625

    SR154         94.375          0.375          1.625
    SR155         97.625          0.375          1.625

    SR156        126.375          0.375          1.625
    SR157        129.625          0.375          1.625

    SR158        158.375          0.375          1.625
    SR159        161.625          0.375          1.625

{  224} > GENERATE 1 JOINTS ID 'SR160',1  X    1.25         Y 0.375  Z L   1.625          OFF 'TP30'

  /-------   CARTESIAN COORDINATES      FREE, GLOBAL  -------/
```

```
                    OFFSET FROM JOINT TP30

      JOINT            X              Y              Z

     SR160            1.250          0.375          1.625

{  225} > GENERATE 1 JOINTS ID 'SR161',1  X   -1.25         Y 0.375  Z L   1.625          OFF 'TP31'

  /-------   CARTESIAN COORDINATES      FREE, GLOBAL  -------/
                    OFFSET FROM JOINT TP31

      JOINT            X              Y              Z

     SR161           -1.250          0.375          1.625

{  226} > GENERATE 2 JOINTS ID 'SR162',1  X L -1.625 1.625  Y 0.375  Z L   1.625   1.625  OFF 'TP32'

  /-------   CARTESIAN COORDINATES      FREE, GLOBAL  -------/
                    OFFSET FROM JOINT TP32

      JOINT            X              Y              Z

     SR162           -1.625          0.375          1.625
     SR163            1.625          0.375          1.625

{  227} > GENERATE 1 JOINTS ID 'SR164',1  X L  1.375        Y 0.375  Z L   1.625          OFF 'TP33'

  /-------   CARTESIAN COORDINATES      FREE, GLOBAL  -------/
                    OFFSET FROM JOINT TP33

      JOINT            X              Y              Z

     SR164            1.375          0.375          1.625

{  228} >
{  229} > GENERATE 1 JOINTS ID 'SR165',1  X    1.625        Y 0.375  Z L  -1.625          OFF 'TP24'

  /-------   CARTESIAN COORDINATES      FREE, GLOBAL  -------/
                    OFFSET FROM JOINT TP24

      JOINT            X              Y              Z

     SR165            1.625          0.375         -1.625

{  230} > GENERATE 2 JOINTS ID 'SR166',1  X L -1.625 1.625  Y 0.375  Z L  -1.625  -1.625  OFF 'TP25'

  /-------   CARTESIAN COORDINATES      FREE, GLOBAL  -------/
                    OFFSET FROM JOINT TP25

      JOINT            X              Y              Z

     SR166           -1.625          0.375         -1.625
     SR167            1.625          0.375         -1.625

{  231} > REPEAT 4 ID 2 X INC 32.0

  /-------   CARTESIAN COORDINATES      FREE, GLOBAL  -------/
                    OFFSET FROM JOINT TP25

      JOINT            X              Y              Z

     SR168           30.375          0.375         -1.625
     SR169           33.625          0.375         -1.625

     SR170           62.375          0.375         -1.625
     SR171           65.625          0.375         -1.625

     SR172           94.375          0.375         -1.625
     SR173           97.625          0.375         -1.625

     SR174          126.375          0.375         -1.625
     SR175          129.625          0.375         -1.625

{  232} > GENERATE 1 JOINTS ID 'SR176',1  X    1.25         Y 0.375  Z L  -1.625          OFF 'TP30'

  /-------   CARTESIAN COORDINATES      FREE, GLOBAL  -------/
                    OFFSET FROM JOINT TP30

      JOINT            X              Y              Z

     SR176            1.250          0.375         -1.625

{  233} > GENERATE 1 JOINTS ID 'SR177',1  X   -1.25         Y 0.375  Z L  -1.625          OFF 'TP31'

  /-------   CARTESIAN COORDINATES      FREE, GLOBAL  -------/
                    OFFSET FROM JOINT TP31

      JOINT            X              Y              Z

     SR177           -1.250          0.375         -1.625

{  234} > GENERATE 1 JOINTS ID 'SR178',1  X L -1.625        Y 0.375  Z L  -1.625          OFF 'TP32'

  /-------   CARTESIAN COORDINATES      FREE, GLOBAL  -------/
                    OFFSET FROM JOINT TP32
```

```
     JOINT            X              Y              Z

    SR178         -1.625          0.375         -1.625

{  235} >
{  236} > GENERATE 1 JOINTS ID 'SR179',1  X    1.625        Y 0.375  Z L   1.625          OFF 'TP35'

  /-------   CARTESIAN COORDINATES      FREE, GLOBAL  -------/
                OFFSET FROM JOINT TP35

     JOINT            X              Y              Z

    SR179             1.625          0.375          1.625

{  237} > GENERATE 2 JOINTS ID 'SR180',1  X L -1.625 1.625  Y 0.375  Z L   1.625   1.625  OFF 'TP36'

  /-------   CARTESIAN COORDINATES      FREE, GLOBAL  -------/
                OFFSET FROM JOINT TP36

     JOINT            X              Y              Z

    SR180            -1.625          0.375          1.625
    SR181             1.625          0.375          1.625

{  238} > REPEAT 4 ID 2 X INC 32.0

  /-------   CARTESIAN COORDINATES      FREE, GLOBAL  -------/
                OFFSET FROM JOINT TP36

     JOINT            X              Y              Z

    SR182           30.375          0.375          1.625
    SR183           33.625          0.375          1.625

    SR184           62.375          0.375          1.625
    SR185           65.625          0.375          1.625

    SR186           94.375          0.375          1.625
    SR187           97.625          0.375          1.625

    SR188          126.375          0.375          1.625
    SR189          129.625          0.375          1.625

{  239} > GENERATE 1 JOINTS ID 'SR190',1  X    1.25         Y 0.375  Z L   1.625          OFF 'TP41'

  /-------   CARTESIAN COORDINATES      FREE, GLOBAL  -------/
                OFFSET FROM JOINT TP41

     JOINT            X              Y              Z

    SR190             1.250          0.375          1.625

{  240} > GENERATE 1 JOINTS ID 'SR191',1  X   -1.25         Y 0.375  Z L   1.625          OFF 'TP42'

  /-------   CARTESIAN COORDINATES      FREE, GLOBAL  -------/
                OFFSET FROM JOINT TP42

     JOINT            X              Y              Z

    SR191            -1.250          0.375          1.625

{  241} > GENERATE 1 JOINTS ID 'SR192',1  X L -1.625        Y 0.375  Z L   1.625          OFF 'TP43'

  /-------   CARTESIAN COORDINATES      FREE, GLOBAL  -------/
                OFFSET FROM JOINT TP43

     JOINT            X              Y              Z

    SR192            -1.625          0.375          1.625

{  242} >
{  243} > GENERATE 1 JOINTS ID 'SR193',1  X    1.625        Y 0.375  Z     -1.625         OFF 'TP4'

  /-------   CARTESIAN COORDINATES      FREE, GLOBAL  -------/
                OFFSET FROM JOINT TP4

     JOINT            X              Y              Z

    SR193             1.625          0.375         -1.625

{  244} > GENERATE 1 JOINTS ID 'SR194',1  X   -1.625        Y 0.375  Z     -1.625         OFF 'TP5'

  /-------   CARTESIAN COORDINATES      FREE, GLOBAL  -------/
                OFFSET FROM JOINT TP5

     JOINT            X              Y              Z

    SR194            -1.625          0.375         -1.625

{  245} > GENERATE 1 JOINTS ID 'SR195',1  X    1.625        Y 0.375  Z     -1.625         OFF 'TP6'

  /-------   CARTESIAN COORDINATES      FREE, GLOBAL  -------/
                OFFSET FROM JOINT TP6

     JOINT            X              Y              Z
```

```
    SR195            1.625          0.375         -1.625

{  246} > GENERATE 1 JOINTS ID 'SR196',1  X   -1.625        Y 0.375  Z     -1.625         OFF 'TP7'

  /-------   CARTESIAN COORDINATES      FREE, GLOBAL  -------/
                 OFFSET FROM JOINT TP7

     JOINT           X              Y              Z

    SR196           -1.625          0.375         -1.625

{  247} > GENERATE 1 JOINTS ID 'SR197',1  X    1.625        Y 0.375  Z      1.625         OFF 'TP15'

  /-------   CARTESIAN COORDINATES      FREE, GLOBAL  -------/
                 OFFSET FROM JOINT TP15

     JOINT           X              Y              Z

    SR197            1.625          0.375          1.625

{  248} > GENERATE 1 JOINTS ID 'SR198',1  X   -1.625        Y 0.375  Z      1.625         OFF 'TP16'

  /-------   CARTESIAN COORDINATES      FREE, GLOBAL  -------/
                 OFFSET FROM JOINT TP16

     JOINT           X              Y              Z

    SR198           -1.625          0.375          1.625

{  249} > GENERATE 1 JOINTS ID 'SR199',1  X    1.625        Y 0.375  Z      1.625         OFF 'TP17'

  /-------   CARTESIAN COORDINATES      FREE, GLOBAL  -------/
                 OFFSET FROM JOINT TP17

     JOINT           X              Y              Z

    SR199            1.625          0.375          1.625

{  250} > GENERATE 1 JOINTS ID 'SR200',1  X   -1.625        Y 0.375  Z      1.625         OFF 'TP18'

  /-------   CARTESIAN COORDINATES      FREE, GLOBAL  -------/
                 OFFSET FROM JOINT TP18

     JOINT           X              Y              Z

    SR200           -1.625          0.375          1.625

{  251} >
{  252} > GENERATE 1 JOINTS ID 'SR201',1  X    0.000        Y 0.000  Z     -6.375         OFF 'SR193'

  /-------   CARTESIAN COORDINATES      FREE, GLOBAL  -------/
                 OFFSET FROM JOINT SR193

     JOINT           X              Y              Z

    SR201            0.000          0.000         -6.375

{  253} > GENERATE 1 JOINTS ID 'SR202',1  X    0.000        Y 0.000  Z     -6.375         OFF 'SR194'

  /-------   CARTESIAN COORDINATES      FREE, GLOBAL  -------/
                 OFFSET FROM JOINT SR194

     JOINT           X              Y              Z

    SR202            0.000          0.000         -6.375

{  254} > GENERATE 1 JOINTS ID 'SR203',1  X    0.000        Y 0.000  Z     -6.375         OFF 'SR195'

  /-------   CARTESIAN COORDINATES      FREE, GLOBAL  -------/
                 OFFSET FROM JOINT SR195

     JOINT           X              Y              Z

    SR203            0.000          0.000         -6.375

{  255} > GENERATE 1 JOINTS ID 'SR204',1  X    0.000        Y 0.000  Z     -6.375         OFF 'SR196'

  /-------   CARTESIAN COORDINATES      FREE, GLOBAL  -------/
                 OFFSET FROM JOINT SR196

     JOINT           X              Y              Z

    SR204            0.000          0.000         -6.375

{  256} > GENERATE 1 JOINTS ID 'SR205',1  X    0.000        Y 0.000  Z      6.375         OFF 'SR197'

  /-------   CARTESIAN COORDINATES      FREE, GLOBAL  -------/
                 OFFSET FROM JOINT SR197

     JOINT           X              Y              Z

    SR205            0.000          0.000          6.375

{  257} > GENERATE 1 JOINTS ID 'SR206',1  X    0.000        Y 0.000  Z      6.375         OFF 'SR198'

  /-------   CARTESIAN COORDINATES      FREE, GLOBAL  -------/
```

```
                    OFFSET FROM JOINT SR198

      JOINT            X              Y              Z

     SR206             0.000          0.000          6.375

{  258} > GENERATE 1 JOINTS ID 'SR207',1  X    0.000        Y 0.000  Z      6.375         OFF 'SR199'

  /-------   CARTESIAN COORDINATES      FREE, GLOBAL  -------/
                    OFFSET FROM JOINT SR199

      JOINT            X              Y              Z

     SR207             0.000          0.000          6.375

{  259} > GENERATE 1 JOINTS ID 'SR208',1  X    0.000        Y 0.000  Z      6.375         OFF 'SR200'

  /-------   CARTESIAN COORDINATES      FREE, GLOBAL  -------/
                    OFFSET FROM JOINT SR200

      JOINT            X              Y              Z

     SR208             0.000          0.000          6.375

{  260} > $=================================HEX NODES=========================================
{  261} > GENERATE 1 JOINTS ID 'HR1',1   X   -1.375        Y 0.875  Z L  -1.625          OFF 'TP1'

  /-------   CARTESIAN COORDINATES      FREE, GLOBAL  -------/
                    OFFSET FROM JOINT TP1

      JOINT            X              Y              Z

     HR1              -1.375          0.875         -1.625

{  262} > GENERATE 2 JOINTS ID 'HR2',1   X L -1.625 1.625  Y 0.875  Z L  -1.625  -1.625  OFF 'TP2'

  /-------   CARTESIAN COORDINATES      FREE, GLOBAL  -------/
                    OFFSET FROM JOINT TP2

      JOINT            X              Y              Z

     HR2              -1.625          0.875         -1.625
     HR3               1.625          0.875         -1.625

{  263} > REPEAT 1 ID 2 X INC 32.0

  /-------   CARTESIAN COORDINATES      FREE, GLOBAL  -------/
                    OFFSET FROM JOINT TP2

      JOINT            X              Y              Z

     HR4              30.375          0.875         -1.625
     HR5              33.625          0.875         -1.625

{  264} > GENERATE 1 JOINTS ID 'HR6',1   X L -1.625        Y 0.875  Z L  -1.625          OFF 'TP4'

  /-------   CARTESIAN COORDINATES      FREE, GLOBAL  -------/
                    OFFSET FROM JOINT TP4

      JOINT            X              Y              Z

     HR6              -1.625          0.875         -1.625

{  265} > GENERATE 1 JOINTS ID 'HR7',1   X L  1.625        Y 0.875  Z L  -1.625          OFF 'TP5'

  /-------   CARTESIAN COORDINATES      FREE, GLOBAL  -------/
                    OFFSET FROM JOINT TP5

      JOINT            X              Y              Z

     HR7               1.625          0.875         -1.625

{  266} > GENERATE 1 JOINTS ID 'HR8',1   X L -1.625        Y 0.875  Z L  -1.625          OFF 'TP6'

  /-------   CARTESIAN COORDINATES      FREE, GLOBAL  -------/
                    OFFSET FROM JOINT TP6

      JOINT            X              Y              Z

     HR8              -1.625          0.875         -1.625

{  267} > GENERATE 1 JOINTS ID 'HR9',1   X L  1.625        Y 0.875  Z L  -1.625          OFF 'TP7'

  /-------   CARTESIAN COORDINATES      FREE, GLOBAL  -------/
                    OFFSET FROM JOINT TP7

      JOINT            X              Y              Z

     HR9               1.625          0.875         -1.625

{  268} > GENERATE 1 JOINTS ID 'HR10',1  X L  1.25         Y 0.875  Z L  -1.625          OFF 'TP8'

  /-------   CARTESIAN COORDINATES      FREE, GLOBAL  -------/
                    OFFSET FROM JOINT TP8

      JOINT            X              Y              Z
```

```
    HR10              1.250          0.875         -1.625

{  269} > GENERATE 1 JOINTS ID 'HR11',1  X L -1.25         Y 0.875  Z L  -1.625          OFF 'TP9'

  /-------   CARTESIAN COORDINATES      FREE, GLOBAL  -------/
                 OFFSET FROM JOINT TP9

     JOINT            X              Y              Z

    HR11             -1.250          0.875         -1.625

{  270} > GENERATE 2 JOINTS ID 'HR12',1  X L -1.625 1.625  Y 0.875  Z L  -1.625  -1.625  OFF 'TP10'

  /-------   CARTESIAN COORDINATES      FREE, GLOBAL  -------/
                 OFFSET FROM JOINT TP10

     JOINT            X              Y              Z

    HR12             -1.625          0.875         -1.625
    HR13              1.625          0.875         -1.625

{  271} > GENERATE 1 JOINTS ID 'HR14',1  X L  1.375        Y 0.875  Z L  -1.625          OFF 'TP11'

  /-------   CARTESIAN COORDINATES      FREE, GLOBAL  -------/
                 OFFSET FROM JOINT TP11

     JOINT            X              Y              Z

    HR14              1.375          0.875         -1.625

{  272} >
{  273} > GENERATE 1 JOINTS ID 'HR15',1  X   -1.375        Y 0.875  Z L   1.625          OFF 'TP12'

  /-------   CARTESIAN COORDINATES      FREE, GLOBAL  -------/
                 OFFSET FROM JOINT TP12

     JOINT            X              Y              Z

    HR15             -1.375          0.875          1.625

{  274} > GENERATE 2 JOINTS ID 'HR16',1  X L -1.625 1.625  Y 0.875  Z L   1.625   1.625  OFF 'TP13'

  /-------   CARTESIAN COORDINATES      FREE, GLOBAL  -------/
                 OFFSET FROM JOINT TP13

     JOINT            X              Y              Z

    HR16             -1.625          0.875          1.625
    HR17              1.625          0.875          1.625

{  275} > REPEAT 1 ID 2 X INC 32.0

  /-------   CARTESIAN COORDINATES      FREE, GLOBAL  -------/
                 OFFSET FROM JOINT TP13

     JOINT            X              Y              Z

    HR18             30.375          0.875          1.625
    HR19             33.625          0.875          1.625

{  276} > GENERATE 1 JOINTS ID 'HR20',1  X L -1.625        Y 0.875  Z L   1.625          OFF 'TP15'

  /-------   CARTESIAN COORDINATES      FREE, GLOBAL  -------/
                 OFFSET FROM JOINT TP15

     JOINT            X              Y              Z

    HR20             -1.625          0.875          1.625

{  277} > GENERATE 1 JOINTS ID 'HR21',1  X L  1.625        Y 0.875  Z L   1.625          OFF 'TP16'

  /-------   CARTESIAN COORDINATES      FREE, GLOBAL  -------/
                 OFFSET FROM JOINT TP16

     JOINT            X              Y              Z

    HR21              1.625          0.875          1.625

{  278} > GENERATE 1 JOINTS ID 'HR22',1  X L -1.625        Y 0.875  Z L   1.625          OFF 'TP17'

  /-------   CARTESIAN COORDINATES      FREE, GLOBAL  -------/
                 OFFSET FROM JOINT TP17

     JOINT            X              Y              Z

    HR22             -1.625          0.875          1.625

{  279} > GENERATE 1 JOINTS ID 'HR23',1  X L  1.625        Y 0.875  Z L   1.625          OFF 'TP18'

  /-------   CARTESIAN COORDINATES      FREE, GLOBAL  -------/
                 OFFSET FROM JOINT TP18

     JOINT            X              Y              Z

    HR23              1.625          0.875          1.625
```

```
{  280} > GENERATE 1 JOINTS ID 'HR24',1  X L  1.25         Y 0.875  Z L   1.625          OFF 'TP19'

  /-------   CARTESIAN COORDINATES      FREE, GLOBAL  -------/
                 OFFSET FROM JOINT TP19

      JOINT            X              Y              Z

     HR24              1.250          0.875          1.625

{  281} > GENERATE 1 JOINTS ID 'HR25',1  X   -1.25         Y 0.875  Z L   1.625          OFF 'TP20'

  /-------   CARTESIAN COORDINATES      FREE, GLOBAL  -------/
                 OFFSET FROM JOINT TP20

      JOINT            X              Y              Z

     HR25             -1.250          0.875          1.625

{  282} > GENERATE 2 JOINTS ID 'HR26',1  X L -1.625 1.625  Y 0.875  Z L   1.625   1.625  OFF 'TP21'

  /-------   CARTESIAN COORDINATES      FREE, GLOBAL  -------/
                 OFFSET FROM JOINT TP21

      JOINT            X              Y              Z

     HR26             -1.625          0.875          1.625
     HR27              1.625          0.875          1.625

{  283} > GENERATE 1 JOINTS ID 'HR28',1  X L  1.375        Y 0.875  Z L   1.625          OFF 'TP22'

  /-------   CARTESIAN COORDINATES      FREE, GLOBAL  -------/
                 OFFSET FROM JOINT TP22

      JOINT            X              Y              Z

     HR28              1.375          0.875          1.625

{  284} >
{  285} > GENERATE 1 JOINTS ID 'HR29',1  X   -1.375        Y 0.875  Z L  -1.625          OFF 'TP12'

  /-------   CARTESIAN COORDINATES      FREE, GLOBAL  -------/
                 OFFSET FROM JOINT TP12

      JOINT            X              Y              Z

     HR29             -1.375          0.875         -1.625

{  286} > GENERATE 2 JOINTS ID 'HR30',1  X L -1.625 1.625  Y 0.875  Z L  -1.625  -1.625  OFF 'TP13'

  /-------   CARTESIAN COORDINATES      FREE, GLOBAL  -------/
                 OFFSET FROM JOINT TP13

      JOINT            X              Y              Z

     HR30             -1.625          0.875         -1.625
     HR31              1.625          0.875         -1.625

{  287} > REPEAT 5 ID 2 X INC 32.0

  /-------   CARTESIAN COORDINATES      FREE, GLOBAL  -------/
                 OFFSET FROM JOINT TP13

      JOINT            X              Y              Z

     HR32             30.375          0.875         -1.625
     HR33             33.625          0.875         -1.625

     HR34             62.375          0.875         -1.625
     HR35             65.625          0.875         -1.625

     HR36             94.375          0.875         -1.625
     HR37             97.625          0.875         -1.625

     HR38            126.375          0.875         -1.625
     HR39            129.625          0.875         -1.625

     HR40            158.375          0.875         -1.625
     HR41            161.625          0.875         -1.625

{  288} > GENERATE 1 JOINTS ID 'HR42',1  X    1.25         Y 0.875  Z L  -1.625          OFF 'TP19'

  /-------   CARTESIAN COORDINATES      FREE, GLOBAL  -------/
                 OFFSET FROM JOINT TP19

      JOINT            X              Y              Z

     HR42              1.250          0.875         -1.625

{  289} > GENERATE 1 JOINTS ID 'HR43',1  X   -1.25         Y 0.875  Z L  -1.625          OFF 'TP20'

  /-------   CARTESIAN COORDINATES      FREE, GLOBAL  -------/
                 OFFSET FROM JOINT TP20

      JOINT            X              Y              Z
```

```
    HR43            -1.250          0.875         -1.625

{  290} > GENERATE 2 JOINTS ID 'HR44',1  X L -1.625 1.625  Y 0.875  Z L  -1.625  -1.625  OFF 'TP21'

  /-------   CARTESIAN COORDINATES      FREE, GLOBAL  -------/
                 OFFSET FROM JOINT TP21

     JOINT           X              Y              Z

    HR44            -1.625          0.875         -1.625
    HR45             1.625          0.875         -1.625

{  291} > GENERATE 1 JOINTS ID 'HR46',1  X L  1.375        Y 0.875  Z L  -1.625          OFF 'TP22'

  /-------   CARTESIAN COORDINATES      FREE, GLOBAL  -------/
                 OFFSET FROM JOINT TP22

     JOINT           X              Y              Z

    HR46             1.375          0.875         -1.625

{  292} >
{  293} > GENERATE 1 JOINTS ID 'HR47',1  X   -1.375        Y 0.875  Z L   1.625          OFF 'TP23'

  /-------   CARTESIAN COORDINATES      FREE, GLOBAL  -------/
                 OFFSET FROM JOINT TP23

     JOINT           X              Y              Z

    HR47            -1.375          0.875          1.625

{  294} > GENERATE 2 JOINTS ID 'HR48',1  X L -1.625 1.625  Y 0.875  Z L   1.625   1.625  OFF 'TP24'

  /-------   CARTESIAN COORDINATES      FREE, GLOBAL  -------/
                 OFFSET FROM JOINT TP24

     JOINT           X              Y              Z

    HR48            -1.625          0.875          1.625
    HR49             1.625          0.875          1.625

{  295} > REPEAT 5 ID 2 X INC 32.0

  /-------   CARTESIAN COORDINATES      FREE, GLOBAL  -------/
                 OFFSET FROM JOINT TP24

     JOINT           X              Y              Z

    HR50            30.375          0.875          1.625
    HR51            33.625          0.875          1.625

    HR52            62.375          0.875          1.625
    HR53            65.625          0.875          1.625

    HR54            94.375          0.875          1.625
    HR55            97.625          0.875          1.625

    HR56           126.375          0.875          1.625
    HR57           129.625          0.875          1.625

    HR58           158.375          0.875          1.625
    HR59           161.625          0.875          1.625

{  296} > GENERATE 1 JOINTS ID 'HR60',1  X    1.25         Y 0.875  Z L   1.625          OFF 'TP30'

  /-------   CARTESIAN COORDINATES      FREE, GLOBAL  -------/
                 OFFSET FROM JOINT TP30

     JOINT           X              Y              Z

    HR60             1.250          0.875          1.625

{  297} > GENERATE 1 JOINTS ID 'HR61',1  X   -1.25         Y 0.875  Z L   1.625          OFF 'TP31'

  /-------   CARTESIAN COORDINATES      FREE, GLOBAL  -------/
                 OFFSET FROM JOINT TP31

     JOINT           X              Y              Z

    HR61            -1.250          0.875          1.625

{  298} > GENERATE 2 JOINTS ID 'HR62',1  X L -1.625 1.625  Y 0.875  Z L   1.625   1.625  OFF 'TP32'

  /-------   CARTESIAN COORDINATES      FREE, GLOBAL  -------/
                 OFFSET FROM JOINT TP32

     JOINT           X              Y              Z

    HR62            -1.625          0.875          1.625
    HR63             1.625          0.875          1.625

{  299} > GENERATE 1 JOINTS ID 'HR64',1  X L  1.375        Y 0.875  Z L   1.625          OFF 'TP33'

  /-------   CARTESIAN COORDINATES      FREE, GLOBAL  -------/
                 OFFSET FROM JOINT TP33
```

```
     JOINT            X              Y              Z

    HR64             1.375          0.875          1.625

{  300} >
{  301} > GENERATE 1 JOINTS ID 'HR65',1  X    1.625        Y 0.875  Z L  -1.625          OFF 'TP24'

  /-------   CARTESIAN COORDINATES      FREE, GLOBAL  -------/
                 OFFSET FROM JOINT TP24

     JOINT            X              Y              Z

    HR65             1.625          0.875         -1.625

{  302} > GENERATE 2 JOINTS ID 'HR66',1  X L -1.625 1.625  Y 0.875  Z L  -1.625  -1.625  OFF 'TP25'

  /-------   CARTESIAN COORDINATES      FREE, GLOBAL  -------/
                 OFFSET FROM JOINT TP25

     JOINT            X              Y              Z

    HR66            -1.625          0.875         -1.625
    HR67             1.625          0.875         -1.625

{  303} > REPEAT 4 ID 2 X INC 32.0

  /-------   CARTESIAN COORDINATES      FREE, GLOBAL  -------/
                 OFFSET FROM JOINT TP25

     JOINT            X              Y              Z

    HR68            30.375          0.875         -1.625
    HR69            33.625          0.875         -1.625

    HR70            62.375          0.875         -1.625
    HR71            65.625          0.875         -1.625

    HR72            94.375          0.875         -1.625
    HR73            97.625          0.875         -1.625

    HR74           126.375          0.875         -1.625
    HR75           129.625          0.875         -1.625

{  304} > GENERATE 1 JOINTS ID 'HR76',1  X    1.25         Y 0.875  Z L  -1.625          OFF 'TP30'

  /-------   CARTESIAN COORDINATES      FREE, GLOBAL  -------/
                 OFFSET FROM JOINT TP30

     JOINT            X              Y              Z

    HR76             1.250          0.875         -1.625

{  305} > GENERATE 1 JOINTS ID 'HR77',1  X   -1.25         Y 0.875  Z L  -1.625          OFF 'TP31'

  /-------   CARTESIAN COORDINATES      FREE, GLOBAL  -------/
                 OFFSET FROM JOINT TP31

     JOINT            X              Y              Z

    HR77            -1.250          0.875         -1.625

{  306} > GENERATE 1 JOINTS ID 'HR78',1  X L -1.625        Y 0.875  Z L  -1.625          OFF 'TP32'

  /-------   CARTESIAN COORDINATES      FREE, GLOBAL  -------/
                 OFFSET FROM JOINT TP32

     JOINT            X              Y              Z

    HR78            -1.625          0.875         -1.625

{  307} >
{  308} > GENERATE 1 JOINTS ID 'HR79',1  X    1.625        Y 0.875  Z L   1.625          OFF 'TP35'

  /-------   CARTESIAN COORDINATES      FREE, GLOBAL  -------/
                 OFFSET FROM JOINT TP35

     JOINT            X              Y              Z

    HR79             1.625          0.875          1.625

{  309} > GENERATE 2 JOINTS ID 'HR80',1  X L -1.625 1.625  Y 0.875  Z L   1.625   1.625  OFF 'TP36'

  /-------   CARTESIAN COORDINATES      FREE, GLOBAL  -------/
                 OFFSET FROM JOINT TP36

     JOINT            X              Y              Z

    HR80            -1.625          0.875          1.625
    HR81             1.625          0.875          1.625

{  310} > REPEAT 4 ID 2 X INC 32.0

  /-------   CARTESIAN COORDINATES      FREE, GLOBAL  -------/
                 OFFSET FROM JOINT TP36

     JOINT            X              Y              Z
```

```
    HR82            30.375          0.875          1.625
    HR83            33.625          0.875          1.625

    HR84            62.375          0.875          1.625
    HR85            65.625          0.875          1.625

    HR86            94.375          0.875          1.625
    HR87            97.625          0.875          1.625

    HR88           126.375          0.875          1.625
    HR89           129.625          0.875          1.625

{  311} > GENERATE 1 JOINTS ID 'HR90',1  X    1.25         Y 0.875  Z L   1.625          OFF 'TP41'

  /-------   CARTESIAN COORDINATES      FREE, GLOBAL  -------/
                 OFFSET FROM JOINT TP41

     JOINT            X              Y              Z

    HR90             1.250          0.875          1.625

{  312} > GENERATE 1 JOINTS ID 'HR91',1  X   -1.25         Y 0.875  Z L   1.625          OFF 'TP42'

  /-------   CARTESIAN COORDINATES      FREE, GLOBAL  -------/
                 OFFSET FROM JOINT TP42

     JOINT            X              Y              Z

    HR91            -1.250          0.875          1.625

{  313} > GENERATE 1 JOINTS ID 'HR92',1  X L -1.625        Y 0.875  Z L   1.625          OFF 'TP43'

  /-------   CARTESIAN COORDINATES      FREE, GLOBAL  -------/
                 OFFSET FROM JOINT TP43

     JOINT            X              Y              Z

    HR92            -1.625          0.875          1.625

{  314} >
{  315} > $=================================STRAINERS NODES=====================================
{  316} > GENERATE 1 JOINTS ID 'SA1',1   X 13.00          Y 0.875  Z L  -16.00          OFF 'TP1'

  /-------   CARTESIAN COORDINATES      FREE, GLOBAL  -------/
                 OFFSET FROM JOINT TP1

     JOINT            X              Y              Z

    SA1             13.000          0.875        -16.000

{  317} > GENERATE 1 JOINTS ID 'SA2',1   X 16.00          Y 0.875  Z L  -16.00          OFF 'TP2'

  /-------   CARTESIAN COORDINATES      FREE, GLOBAL  -------/
                 OFFSET FROM JOINT TP2

     JOINT            X              Y              Z

    SA2             16.000          0.875        -16.000

{  318} > GENERATE 1 JOINTS ID 'SA3',1   X 16.00          Y 0.875  Z L  -16.00          OFF 'TP3'

  /-------   CARTESIAN COORDINATES      FREE, GLOBAL  -------/
                 OFFSET FROM JOINT TP3

     JOINT            X              Y              Z

    SA3             16.000          0.875        -16.000

{  319} > GENERATE 1 JOINTS ID 'SA4',1   X 16.00          Y 0.875  Z L  -16.00          OFF 'TP5'

  /-------   CARTESIAN COORDINATES      FREE, GLOBAL  -------/
                 OFFSET FROM JOINT TP5

     JOINT            X              Y              Z

    SA4             16.000          0.875        -16.000

{  320} > GENERATE 1 JOINTS ID 'SA5',1   X 16.00          Y 0.875  Z L  -16.00          OFF 'TP7'

  /-------   CARTESIAN COORDINATES      FREE, GLOBAL  -------/
                 OFFSET FROM JOINT TP7

     JOINT            X              Y              Z

    SA5             16.000          0.875        -16.000

{  321} > GENERATE 1 JOINTS ID 'SA6',1   X 13.125         Y 0.875  Z L  -16.00          OFF 'TP9'

  /-------   CARTESIAN COORDINATES      FREE, GLOBAL  -------/
                 OFFSET FROM JOINT TP9

     JOINT            X              Y              Z

    SA6             13.125          0.875        -16.000
```

```
{  322} > GENERATE 1 JOINTS ID 'SA7',1   X 16.00          Y 0.875  Z L  -16.00         OFF 'TP10'

  /-------   CARTESIAN COORDINATES      FREE, GLOBAL  -------/
                 OFFSET FROM JOINT TP10

      JOINT            X              Y              Z

     SA7             16.000         0.875        -16.000

{  323} >
{  324} > GENERATE 1 JOINTS ID 'SB1',1   X 13.00          Y 0.875  Z L  -16.00         OFF 'TP12'

  /-------   CARTESIAN COORDINATES      FREE, GLOBAL  -------/
                 OFFSET FROM JOINT TP12

      JOINT            X              Y              Z

     SB1             13.000         0.875        -16.000

{  325} > REPEAT 6 ID 1 X INC 32.0

  /-------   CARTESIAN COORDINATES      FREE, GLOBAL  -------/
                 OFFSET FROM JOINT TP12

      JOINT            X              Y              Z

     SB2             45.000         0.875        -16.000

     SB3             77.000         0.875        -16.000

     SB4            109.000         0.875        -16.000

     SB5            141.000         0.875        -16.000

     SB6            173.000         0.875        -16.000

     SB7            205.000         0.875        -16.000

{  326} > GENERATE 1 JOINTS ID 'SB8',1   X 13.125         Y 0.875  Z L  -16.00         OFF 'TP20'

  /-------   CARTESIAN COORDINATES      FREE, GLOBAL  -------/
                 OFFSET FROM JOINT TP20

      JOINT            X              Y              Z

     SB8             13.125         0.875        -16.000

{  327} > REPEAT 1 ID 1 X INC 32.0

  /-------   CARTESIAN COORDINATES      FREE, GLOBAL  -------/
                 OFFSET FROM JOINT TP20

      JOINT            X              Y              Z

     SB9             45.125         0.875        -16.000

{  328} >
{  329} > GENERATE 1 JOINTS ID 'SC1',1   X 16.00          Y 0.875  Z L  -16.00         OFF 'TP24'

  /-------   CARTESIAN COORDINATES      FREE, GLOBAL  -------/
                 OFFSET FROM JOINT TP24

      JOINT            X              Y              Z

     SC1             16.000         0.875        -16.000

{  330} > REPEAT 5 ID 1 X INC 32.0

  /-------   CARTESIAN COORDINATES      FREE, GLOBAL  -------/
                 OFFSET FROM JOINT TP24

      JOINT            X              Y              Z

     SC2             48.000         0.875        -16.000

     SC3             80.000         0.875        -16.000

     SC4            112.000         0.875        -16.000

     SC5            144.000         0.875        -16.000

     SC6            176.000         0.875        -16.000

{  331} > GENERATE 1 JOINTS ID 'SC7',1   X 13.125         Y 0.875   Z L   -16.00       OFF 'TP31'

  /-------   CARTESIAN COORDINATES      FREE, GLOBAL  -------/
                 OFFSET FROM JOINT TP31

      JOINT            X              Y              Z

     SC7             13.125         0.875        -16.000

{  332} >
{  333} > $========================== LOWER SEAL STRIP PLATES NODES==============================
{  334} > $GENERATE 3 JOINTS ID 'P1',9            Y 0.25   Z L 0.0 -32.0 -64.0          OFF 'BP2'
{  335} > $GENERATE 4 JOINTS ID 'P2',9    X 29.0   Y 0.25   Z L 0.0 -32.0 -64.0 -96.0    OFF 'BP2'
```

```
{  336} > $REPEAT 5 ID 1 X INC 32.0
{  337} > $GENERATE 4 JOINTS ID 'P8',9    X 196.0  Y 0.25   Z L 0.0 -32.0 -64.0 -96.0    OFF 'BP2'
{  338} > $GENERATE 3 JOINTS ID 'P9',9    X 228.0  Y 0.25   Z L 0.0 -32.0 -64.0          OFF 'BP2'
{  339} >
{  340} > $==========================TOP SEAL STRIP PLATES NODES==================================
{  341} > $GENERATE 3 JOINTS ID 'P41',9            Y 11.75   Z L 0.0 -32.0 -64.0         OFF 'BP2'
{  342} > $GENERATE 4 JOINTS ID 'P42',9   X 32.0   Y 11.75   Z L 0.0 -32.0 -64.0 -96.0   OFF 'BP2'
{  343} > $REPEAT 5 ID 1 X INC 32.0
{  344} > $GENERATE 4 JOINTS ID 'P48',9   X 196.0  Y 11.75   Z L 0.0 -32.0 -64.0 -96.0   OFF 'BP2'
{  345} > $GENERATE 3 JOINTS ID 'P49',9   X 228.0  Y 11.75   Z L 0.0 -32.0 -64.0         OFF 'BP2'
{  346} >
{  347} > GENERATE 1 JOINTS ID 'P101',1  Y -4.5   OFF 'TP16'

  /-------   CARTESIAN COORDINATES      FREE, GLOBAL  -------/
                 OFFSET FROM JOINT TP16

      JOINT            X              Y              Z

     P101            0.000         -4.500          0.000

{  348} > REPEAT 2 ID 1 X INC 32.0

  /-------   CARTESIAN COORDINATES      FREE, GLOBAL  -------/
                 OFFSET FROM JOINT TP16

      JOINT            X              Y              Z

     P102           32.000         -4.500          0.000

     P103           64.000         -4.500          0.000

{  349} > GENERATE 1 JOINTS ID 'P104',1  Y -4.5   OFF 'TP27'

  /-------   CARTESIAN COORDINATES      FREE, GLOBAL  -------/
                 OFFSET FROM JOINT TP27

      JOINT            X              Y              Z

     P104            0.000         -4.500          0.000

{  350} > REPEAT 2 ID 1 X INC 32.0

  /-------   CARTESIAN COORDINATES      FREE, GLOBAL  -------/
                 OFFSET FROM JOINT TP27

      JOINT            X              Y              Z

     P105           32.000         -4.500          0.000

     P106           64.000         -4.500          0.000

{  351} >
{  352} > $==========================PLENUM CHANNELS NODES=========================================
{  353} > GENERATE 1 JOINTS ID 'C1',1    Y 6.1875  OFF 'BP1'

  /-------   CARTESIAN COORDINATES      FREE, GLOBAL  -------/
                 OFFSET FROM JOINT BP1

      JOINT            X              Y              Z

     C1              0.000          6.188          0.000

{  354} > GENERATE 1 JOINTS ID 'C2',1    Y 6.1875  OFF 'BP2'

  /-------   CARTESIAN COORDINATES      FREE, GLOBAL  -------/
                 OFFSET FROM JOINT BP2

      JOINT            X              Y              Z

     C2              0.000          6.188          0.000

{  355} > REPEAT 4 ID 1 X INC 32.0

  /-------   CARTESIAN COORDINATES      FREE, GLOBAL  -------/
                 OFFSET FROM JOINT BP2

      JOINT            X              Y              Z

     C3             32.000          6.188          0.000

     C4             64.000          6.188          0.000

     C5             96.000          6.188          0.000

     C6            128.000          6.188          0.000

{  356} > GENERATE 1 JOINTS ID 'C7',1    Y 6.1875  OFF 'BP7'

  /-------   CARTESIAN COORDINATES      FREE, GLOBAL  -------/
                 OFFSET FROM JOINT BP7

      JOINT            X              Y              Z

     C7              0.000          6.188          0.000

{  357} > GENERATE 1 JOINTS ID 'C8',1    Y 6.1875  OFF 'BP8'
```

```
  /-------   CARTESIAN COORDINATES      FREE, GLOBAL  -------/
                 OFFSET FROM JOINT BP8

      JOINT            X              Y              Z

     C8                0.000          6.188          0.000

{  358} > GENERATE 1 JOINTS ID 'C9',1    Y 6.1875  OFF 'BP9'

  /-------   CARTESIAN COORDINATES      FREE, GLOBAL  -------/
                 OFFSET FROM JOINT BP9

      JOINT            X              Y              Z

     C9                0.000          6.188          0.000

{  359} > GENERATE 2 JOINTS ID 'C10',1   X L 29.125 58.125  OFF 'C9'

  /-------   CARTESIAN COORDINATES      FREE, GLOBAL  -------/
                 OFFSET FROM JOINT C9

      JOINT            X              Y              Z

     C10              29.125          0.000          0.000
     C11              58.125          0.000          0.000

{  360} >
{  361} > GENERATE 2 JOINTS ID 'C12',2   Y 6.1875  Z L 0.0 -32.0  OFF 'BP12'

  /-------   CARTESIAN COORDINATES      FREE, GLOBAL  -------/
                 OFFSET FROM JOINT BP12

      JOINT            X              Y              Z

     C12               0.000          6.188          0.000
     C14               0.000          6.188        -32.000

{  362} > GENERATE 2 JOINTS ID 'C13',4   Y 6.1875  Z L 0.0 -32.0  OFF 'BP22'

  /-------   CARTESIAN COORDINATES      FREE, GLOBAL  -------/
                 OFFSET FROM JOINT BP22

      JOINT            X              Y              Z

     C13               0.000          6.188          0.000
     C17               0.000          6.188        -32.000

{  363} > GENERATE 1 JOINTS ID 'C15',1   Y 6.1875  OFF 'BP24'

  /-------   CARTESIAN COORDINATES      FREE, GLOBAL  -------/
                 OFFSET FROM JOINT BP24

      JOINT            X              Y              Z

     C15               0.000          6.188          0.000

{  364} > GENERATE 1 JOINTS ID 'C16',1   Y 6.1875  OFF 'BP32'

  /-------   CARTESIAN COORDINATES      FREE, GLOBAL  -------/
                 OFFSET FROM JOINT BP32

      JOINT            X              Y              Z

     C16               0.000          6.188          0.000

{  365} > GENERATE 1 JOINTS ID 'C18',1   Y 6.1875  OFF 'BP35'

  /-------   CARTESIAN COORDINATES      FREE, GLOBAL  -------/
                 OFFSET FROM JOINT BP35

      JOINT            X              Y              Z

     C18               0.000          6.188          0.000

{  366} > REPEAT 4 ID 1 X INC 32.0

  /-------   CARTESIAN COORDINATES      FREE, GLOBAL  -------/
                 OFFSET FROM JOINT BP35

      JOINT            X              Y              Z

     C19              32.000          6.188          0.000

     C20              64.000          6.188          0.000

     C21              96.000          6.188          0.000

     C22             128.000          6.188          0.000

{  367} > GENERATE 1 JOINTS ID 'C23',1   Y 6.1875  OFF 'BP40'

  /-------   CARTESIAN COORDINATES      FREE, GLOBAL  -------/
                 OFFSET FROM JOINT BP40

      JOINT            X              Y              Z
```

```
     C23              0.000          6.188          0.000

{  368} > GENERATE 1 JOINTS ID 'C24',1   Y 6.1875  OFF 'BP41'

  /-------   CARTESIAN COORDINATES      FREE, GLOBAL  -------/
                 OFFSET FROM JOINT BP41

      JOINT            X              Y              Z

     C24               0.000          6.188          0.000

{  369} > GENERATE 2 JOINTS ID 'C25',1   X L 9.75 38.875 OFF 'C24'

  /-------   CARTESIAN COORDINATES      FREE, GLOBAL  -------/
                 OFFSET FROM JOINT C24

      JOINT            X              Y              Z

     C25               9.750          0.000          0.000
     C26              38.875          0.000          0.000

{  370} >
{  371} > GENERATE 1 JOINTS ID 'C27',1   X -40.028                OFF 'C7'

  /-------   CARTESIAN COORDINATES      FREE, GLOBAL  -------/
                 OFFSET FROM JOINT C7

      JOINT            X              Y              Z

     C27             -40.028          0.000          0.000

{  372} > GENERATE 1 JOINTS ID 'C28',1   X -32.858    Z  19.205   OFF 'C7'

  /-------   CARTESIAN COORDINATES      FREE, GLOBAL  -------/
                 OFFSET FROM JOINT C7

      JOINT            X              Y              Z

     C28             -32.858          0.000         19.205

{  373} > GENERATE 1 JOINTS ID 'C29',1   X   2.273    Z   6.089   OFF 'C7'

  /-------   CARTESIAN COORDINATES      FREE, GLOBAL  -------/
                 OFFSET FROM JOINT C7

      JOINT            X              Y              Z

     C29               2.273          0.000          6.089

{  374} >
{  375} > GENERATE 1 JOINTS ID 'TC27',1  Y -12.36                  OFF 'C27'

  /-------   CARTESIAN COORDINATES      FREE, GLOBAL  -------/
                 OFFSET FROM JOINT C27

      JOINT            X              Y              Z

     TC27              0.000        -12.360          0.000

{  376} > GENERATE 1 JOINTS ID 'TC28',1  Y -12.36                  OFF 'C28'

  /-------   CARTESIAN COORDINATES      FREE, GLOBAL  -------/
                 OFFSET FROM JOINT C28

      JOINT            X              Y              Z

     TC28              0.000        -12.360          0.000

{  377} > GENERATE 1 JOINTS ID 'TC29',1  Y -12.36                  OFF 'C29'

  /-------   CARTESIAN COORDINATES      FREE, GLOBAL  -------/
                 OFFSET FROM JOINT C29

      JOINT            X              Y              Z

     TC29              0.000        -12.360          0.000

{  378} >
{  379} > $============================STICK MODEL NODES========================================
{  380} > GENERATE 1 JOINTS  ID 'AA1',1    Y  0.25                        OFF 'SA1'

  /-------   CARTESIAN COORDINATES      FREE, GLOBAL  -------/
                 OFFSET FROM JOINT SA1

      JOINT            X              Y              Z

     AA1               0.000          0.250          0.000

{  381} > GENERATE 4 JOINTS  ID 'AA2',1    Y 13.3372 INC 11.7176          OFF 'AA1'

  /-------   CARTESIAN COORDINATES      FREE, GLOBAL  -------/
                 OFFSET FROM JOINT AA1

      JOINT            X              Y              Z
```

```
     AA2              0.000          13.337          0.000
     AA3              0.000          25.055          0.000
     AA4              0.000          36.772          0.000
     AA5              0.000          48.490          0.000

{  382} > GENERATE 4 JOI CYL ID 'AA101',1  R 15.25 TH 45.0, 90.0          OFF 'AA1'

  /------- CYLINDRICAL COORDINATES      FREE, GLOBAL  -------/
                 OFFSET FROM JOINT AA1

      JOINT            R              TH             LY

     AA101           15.250          45.000          0.000
     AA102           15.250         135.000          0.000
     AA103           15.250         225.000          0.000
     AA104           15.250         315.000          0.000

{  383} > GENERATE 4 JOI CYL ID 'AA201',1  R 15.25 TH 45.0, 90.0          OFF 'AA2'

  /------- CYLINDRICAL COORDINATES      FREE, GLOBAL  -------/
                 OFFSET FROM JOINT AA2

      JOINT            R              TH             LY

     AA201           15.250          45.000          0.000
     AA202           15.250         135.000          0.000
     AA203           15.250         225.000          0.000
     AA204           15.250         315.000          0.000

{  384} > REPEAT 3 ID 100 LY 11.7176

  /------- CYLINDRICAL COORDINATES      FREE, GLOBAL  -------/
                 OFFSET FROM JOINT AA2

      JOINT            R              TH             LY

     AA301           15.250          45.000         11.718
     AA302           15.250         135.000         11.718
     AA303           15.250         225.000         11.718
     AA304           15.250         315.000         11.718

     AA401           15.250          45.000         23.435
     AA402           15.250         135.000         23.435
     AA403           15.250         225.000         23.435
     AA404           15.250         315.000         23.435

     AA501           15.250          45.000         35.153
     AA502           15.250         135.000         35.153
     AA503           15.250         225.000         35.153
     AA504           15.250         315.000         35.153

{  385} >
{  386} > GENERATE 1 JOINTS ID  'AB1',1    Y  0.25                         OFF 'SA2'

  /-------   CARTESIAN COORDINATES      FREE, GLOBAL  -------/
                 OFFSET FROM JOINT SA2

      JOINT            X              Y              Z

     AB1              0.000           0.250          0.000

{  387} > GENERATE 4 JOINTS  ID 'AB2',1    Y 13.3372 INC 11.7176          OFF 'AB1'

  /-------   CARTESIAN COORDINATES      FREE, GLOBAL  -------/
                 OFFSET FROM JOINT AB1

      JOINT            X              Y              Z

     AB2              0.000          13.337          0.000
     AB3              0.000          25.055          0.000
     AB4              0.000          36.772          0.000
     AB5              0.000          48.490          0.000

{  388} > GENERATE 4 JOI CYL ID 'AB101',1  R 15.25 TH 45.0, 90.0          OFF 'AB1'

  /------- CYLINDRICAL COORDINATES      FREE, GLOBAL  -------/
                 OFFSET FROM JOINT AB1

      JOINT            R              TH             LY

     AB101           15.250          45.000          0.000
     AB102           15.250         135.000          0.000
     AB103           15.250         225.000          0.000
     AB104           15.250         315.000          0.000

{  389} > GENERATE 4 JOI CYL ID 'AB201',1  R 15.25 TH 45.0, 90.0          OFF 'AB2'

  /------- CYLINDRICAL COORDINATES      FREE, GLOBAL  -------/
                 OFFSET FROM JOINT AB2

      JOINT            R              TH             LY

     AB201           15.250          45.000          0.000
     AB202           15.250         135.000          0.000
     AB203           15.250         225.000          0.000
     AB204           15.250         315.000          0.000
```

```
{  390} > REPEAT 3 ID 100 LY 11.7176

  /------- CYLINDRICAL COORDINATES      FREE, GLOBAL  -------/
                 OFFSET FROM JOINT AB2

      JOINT            R              TH             LY

     AB301           15.250         45.000         11.718
     AB302           15.250        135.000         11.718
     AB303           15.250        225.000         11.718
     AB304           15.250        315.000         11.718

     AB401           15.250         45.000         23.435
     AB402           15.250        135.000         23.435
     AB403           15.250        225.000         23.435
     AB404           15.250        315.000         23.435

     AB501           15.250         45.000         35.153
     AB502           15.250        135.000         35.153
     AB503           15.250        225.000         35.153
     AB504           15.250        315.000         35.153

{  391} >
{  392} > GENERATE 1 JOINTS ID  'AC1',1    Y  0.25                          OFF 'SA3'

  /-------   CARTESIAN COORDINATES      FREE, GLOBAL  -------/
                 OFFSET FROM JOINT SA3

      JOINT            X              Y              Z

     AC1              0.000          0.250          0.000

{  393} > GENERATE 4 JOINTS  ID 'AC2',1    Y 13.3372 INC 11.7176           OFF 'AC1'

  /-------   CARTESIAN COORDINATES      FREE, GLOBAL  -------/
                 OFFSET FROM JOINT AC1

      JOINT            X              Y              Z

     AC2              0.000         13.337          0.000
     AC3              0.000         25.055          0.000
     AC4              0.000         36.772          0.000
     AC5              0.000         48.490          0.000

{  394} > GENERATE 4 JOI CYL ID 'AC101',1  R 15.25 TH 45.0, 90.0           OFF 'AC1'

  /------- CYLINDRICAL COORDINATES      FREE, GLOBAL  -------/
                 OFFSET FROM JOINT AC1

      JOINT            R              TH             LY

     AC101           15.250         45.000          0.000
     AC102           15.250        135.000          0.000
     AC103           15.250        225.000          0.000
     AC104           15.250        315.000          0.000

{  395} > GENERATE 4 JOI CYL ID 'AC201',1  R 15.25 TH 45.0, 90.0           OFF 'AC2'

  /------- CYLINDRICAL COORDINATES      FREE, GLOBAL  -------/
                 OFFSET FROM JOINT AC2

      JOINT            R              TH             LY

     AC201           15.250         45.000          0.000
     AC202           15.250        135.000          0.000
     AC203           15.250        225.000          0.000
     AC204           15.250        315.000          0.000

{  396} > REPEAT 3 ID 100 LY 11.7176

  /------- CYLINDRICAL COORDINATES      FREE, GLOBAL  -------/
                 OFFSET FROM JOINT AC2

      JOINT            R              TH             LY

     AC301           15.250         45.000         11.718
     AC302           15.250        135.000         11.718
     AC303           15.250        225.000         11.718
     AC304           15.250        315.000         11.718

     AC401           15.250         45.000         23.435
     AC402           15.250        135.000         23.435
     AC403           15.250        225.000         23.435
     AC404           15.250        315.000         23.435

     AC501           15.250         45.000         35.153
     AC502           15.250        135.000         35.153
     AC503           15.250        225.000         35.153
     AC504           15.250        315.000         35.153

{  397} >
{  398} > GENERATE 1 JOINTS ID  'AE1',1    Y  0.25                          OFF 'SA4'

  /-------   CARTESIAN COORDINATES      FREE, GLOBAL  -------/
                 OFFSET FROM JOINT SA4
```

```
     JOINT            X              Y              Z

    AE1               0.000          0.250          0.000

{  399} > GENERATE 4 JOINTS  ID 'AE2',1    Y 13.3372 INC 11.7176          OFF 'AE1'

  /-------   CARTESIAN COORDINATES      FREE, GLOBAL  -------/
                 OFFSET FROM JOINT AE1

     JOINT            X              Y              Z

    AE2               0.000         13.337          0.000
    AE3               0.000         25.055          0.000
    AE4               0.000         36.772          0.000
    AE5               0.000         48.490          0.000

{  400} > GENERATE 4 JOI CYL ID 'AE101',1  R 15.25 TH 45.0, 90.0          OFF 'AE1'

  /------- CYLINDRICAL COORDINATES      FREE, GLOBAL  -------/
                 OFFSET FROM JOINT AE1

     JOINT            R              TH             LY

    AE101            15.250         45.000          0.000
    AE102            15.250        135.000          0.000
    AE103            15.250        225.000          0.000
    AE104            15.250        315.000          0.000

{  401} > GENERATE 4 JOI CYL ID 'AE201',1  R 15.25 TH 45.0, 90.0          OFF 'AE2'

  /------- CYLINDRICAL COORDINATES      FREE, GLOBAL  -------/
                 OFFSET FROM JOINT AE2

     JOINT            R              TH             LY

    AE201            15.250         45.000          0.000
    AE202            15.250        135.000          0.000
    AE203            15.250        225.000          0.000
    AE204            15.250        315.000          0.000

{  402} > REPEAT 3 ID 100 LY 11.7176

  /------- CYLINDRICAL COORDINATES      FREE, GLOBAL  -------/
                 OFFSET FROM JOINT AE2

     JOINT            R              TH             LY

    AE301            15.250         45.000         11.718
    AE302            15.250        135.000         11.718
    AE303            15.250        225.000         11.718
    AE304            15.250        315.000         11.718

    AE401            15.250         45.000         23.435
    AE402            15.250        135.000         23.435
    AE403            15.250        225.000         23.435
    AE404            15.250        315.000         23.435

    AE501            15.250         45.000         35.153
    AE502            15.250        135.000         35.153
    AE503            15.250        225.000         35.153
    AE504            15.250        315.000         35.153

{  403} >
{  404} > GENERATE 1 JOINTS ID  'AG1',1    Y  0.25                        OFF 'SA5'

  /-------   CARTESIAN COORDINATES      FREE, GLOBAL  -------/
                 OFFSET FROM JOINT SA5

     JOINT            X              Y              Z

    AG1               0.000          0.250          0.000

{  405} > GENERATE 4 JOINTS  ID 'AG2',1    Y 13.3372 INC 11.7176          OFF 'AG1'

  /-------   CARTESIAN COORDINATES      FREE, GLOBAL  -------/
                 OFFSET FROM JOINT AG1

     JOINT            X              Y              Z

    AG2               0.000         13.337          0.000
    AG3               0.000         25.055          0.000
    AG4               0.000         36.772          0.000
    AG5               0.000         48.490          0.000

{  406} > GENERATE 4 JOI CYL ID 'AG101',1  R 15.25 TH 45.0, 90.0          OFF 'AG1'

  /------- CYLINDRICAL COORDINATES      FREE, GLOBAL  -------/
                 OFFSET FROM JOINT AG1

     JOINT            R              TH             LY

    AG101            15.250         45.000          0.000
    AG102            15.250        135.000          0.000
    AG103            15.250        225.000          0.000
    AG104            15.250        315.000          0.000
```

```
{  407} > GENERATE 4 JOI CYL ID 'AG201',1  R 15.25 TH 45.0, 90.0          OFF 'AG2'

  /------- CYLINDRICAL COORDINATES      FREE, GLOBAL  -------/
                 OFFSET FROM JOINT AG2

      JOINT            R              TH             LY

     AG201           15.250         45.000          0.000
     AG202           15.250        135.000          0.000
     AG203           15.250        225.000          0.000
     AG204           15.250        315.000          0.000

{  408} > REPEAT 3 ID 100 LY 11.7176

  /------- CYLINDRICAL COORDINATES      FREE, GLOBAL  -------/
                 OFFSET FROM JOINT AG2

      JOINT            R              TH             LY

     AG301           15.250         45.000         11.718
     AG302           15.250        135.000         11.718
     AG303           15.250        225.000         11.718
     AG304           15.250        315.000         11.718

     AG401           15.250         45.000         23.435
     AG402           15.250        135.000         23.435
     AG403           15.250        225.000         23.435
     AG404           15.250        315.000         23.435

     AG501           15.250         45.000         35.153
     AG502           15.250        135.000         35.153
     AG503           15.250        225.000         35.153
     AG504           15.250        315.000         35.153

{  409} >
{  410} > GENERATE 1 JOINTS ID  'AH1',1    Y  0.25                          OFF 'SA6'

  /-------   CARTESIAN COORDINATES      FREE, GLOBAL  -------/
                 OFFSET FROM JOINT SA6

      JOINT            X              Y              Z

     AH1              0.000          0.250          0.000

{  411} > GENERATE 4 JOINTS  ID 'AH2',1    Y 13.3372 INC 11.7176            OFF 'AH1'

  /-------   CARTESIAN COORDINATES      FREE, GLOBAL  -------/
                 OFFSET FROM JOINT AH1

      JOINT            X              Y              Z

     AH2              0.000         13.337          0.000
     AH3              0.000         25.055          0.000
     AH4              0.000         36.772          0.000
     AH5              0.000         48.490          0.000

{  412} > GENERATE 4 JOI CYL ID 'AH101',1  R 15.25 TH 45.0, 90.0          OFF 'AH1'

  /------- CYLINDRICAL COORDINATES      FREE, GLOBAL  -------/
                 OFFSET FROM JOINT AH1

      JOINT            R              TH             LY

     AH101           15.250         45.000          0.000
     AH102           15.250        135.000          0.000
     AH103           15.250        225.000          0.000
     AH104           15.250        315.000          0.000

{  413} > GENERATE 4 JOI CYL ID 'AH201',1  R 15.25 TH 45.0, 90.0          OFF 'AH2'

  /------- CYLINDRICAL COORDINATES      FREE, GLOBAL  -------/
                 OFFSET FROM JOINT AH2

      JOINT            R              TH             LY

     AH201           15.250         45.000          0.000
     AH202           15.250        135.000          0.000
     AH203           15.250        225.000          0.000
     AH204           15.250        315.000          0.000

{  414} > REPEAT 3 ID 100 LY 11.7176

  /------- CYLINDRICAL COORDINATES      FREE, GLOBAL  -------/
                 OFFSET FROM JOINT AH2

      JOINT            R              TH             LY

     AH301           15.250         45.000         11.718
     AH302           15.250        135.000         11.718
     AH303           15.250        225.000         11.718
     AH304           15.250        315.000         11.718

     AH401           15.250         45.000         23.435
     AH402           15.250        135.000         23.435
     AH403           15.250        225.000         23.435
```

```
    AH404          15.250        315.000        23.435

    AH501          15.250         45.000        35.153
    AH502          15.250        135.000        35.153
    AH503          15.250        225.000        35.153
    AH504          15.250        315.000        35.153

{  415} >
{  416} > GENERATE 1 JOINTS ID  'AJ1',1    Y  0.25                        OFF 'SA7'

  /-------   CARTESIAN COORDINATES      FREE, GLOBAL  -------/
                 OFFSET FROM JOINT SA7

     JOINT          X              Y              Z

    AJ1             0.000          0.250          0.000

{  417} > GENERATE 4 JOINTS  ID 'AJ2',1    Y 13.3372 INC 11.7176          OFF 'AJ1'

  /-------   CARTESIAN COORDINATES      FREE, GLOBAL  -------/
                 OFFSET FROM JOINT AJ1

     JOINT          X              Y              Z

    AJ2             0.000         13.337          0.000
    AJ3             0.000         25.055          0.000
    AJ4             0.000         36.772          0.000
    AJ5             0.000         48.490          0.000

{  418} > GENERATE 4 JOI CYL ID 'AJ101',1  R 15.25 TH 45.0, 90.0          OFF 'AJ1'

  /------- CYLINDRICAL COORDINATES      FREE, GLOBAL  -------/
                 OFFSET FROM JOINT AJ1

     JOINT          R              TH             LY

    AJ101          15.250         45.000          0.000
    AJ102          15.250        135.000          0.000
    AJ103          15.250        225.000          0.000
    AJ104          15.250        315.000          0.000

{  419} > GENERATE 4 JOI CYL ID 'AJ201',1  R 15.25 TH 45.0, 90.0          OFF 'AJ2'

  /------- CYLINDRICAL COORDINATES      FREE, GLOBAL  -------/
                 OFFSET FROM JOINT AJ2

     JOINT          R              TH             LY

    AJ201          15.250         45.000          0.000
    AJ202          15.250        135.000          0.000
    AJ203          15.250        225.000          0.000
    AJ204          15.250        315.000          0.000

{  420} > REPEAT 3 ID 100 LY 11.7176

  /------- CYLINDRICAL COORDINATES      FREE, GLOBAL  -------/
                 OFFSET FROM JOINT AJ2

     JOINT          R              TH             LY

    AJ301          15.250         45.000         11.718
    AJ302          15.250        135.000         11.718
    AJ303          15.250        225.000         11.718
    AJ304          15.250        315.000         11.718

    AJ401          15.250         45.000         23.435
    AJ402          15.250        135.000         23.435
    AJ403          15.250        225.000         23.435
    AJ404          15.250        315.000         23.435

    AJ501          15.250         45.000         35.153
    AJ502          15.250        135.000         35.153
    AJ503          15.250        225.000         35.153
    AJ504          15.250        315.000         35.153

{  421} > GENERATE 1 JOINTS  ID 'BA1',1    Y  0.25                        OFF 'SB1'

  /-------   CARTESIAN COORDINATES      FREE, GLOBAL  -------/
                 OFFSET FROM JOINT SB1

     JOINT          X              Y              Z

    BA1             0.000          0.250          0.000

{  422} > GENERATE 4 JOINTS  ID 'BA2',1    Y 13.3372 INC 11.7176          OFF 'BA1'

  /-------   CARTESIAN COORDINATES      FREE, GLOBAL  -------/
                 OFFSET FROM JOINT BA1

     JOINT          X              Y              Z

    BA2             0.000         13.337          0.000
    BA3             0.000         25.055          0.000
    BA4             0.000         36.772          0.000
    BA5             0.000         48.490          0.000
```

```
{  423} > GENERATE 4 JOI CYL ID 'BA101',1  R 15.25 TH 45.0, 90.0          OFF 'BA1'

  /------- CYLINDRICAL COORDINATES      FREE, GLOBAL  -------/
                 OFFSET FROM JOINT BA1

     JOINT            R              TH             LY

    BA101           15.250         45.000          0.000
    BA102           15.250        135.000          0.000
    BA103           15.250        225.000          0.000
    BA104           15.250        315.000          0.000

{  424} > GENERATE 4 JOI CYL ID 'BA201',1  R 15.25 TH 45.0, 90.0          OFF 'BA2'

  /------- CYLINDRICAL COORDINATES      FREE, GLOBAL  -------/
                 OFFSET FROM JOINT BA2

     JOINT            R              TH             LY

    BA201           15.250         45.000          0.000
    BA202           15.250        135.000          0.000
    BA203           15.250        225.000          0.000
    BA204           15.250        315.000          0.000

{  425} > REPEAT 3 ID 100 LY 11.7176

  /------- CYLINDRICAL COORDINATES      FREE, GLOBAL  -------/
                 OFFSET FROM JOINT BA2

     JOINT            R              TH             LY

    BA301           15.250         45.000         11.718
    BA302           15.250        135.000         11.718
    BA303           15.250        225.000         11.718
    BA304           15.250        315.000         11.718

    BA401           15.250         45.000         23.435
    BA402           15.250        135.000         23.435
    BA403           15.250        225.000         23.435
    BA404           15.250        315.000         23.435

    BA501           15.250         45.000         35.153
    BA502           15.250        135.000         35.153
    BA503           15.250        225.000         35.153
    BA504           15.250        315.000         35.153

{  426} >
{  427} > GENERATE 1 JOINTS ID  'BB1',1    Y  0.25                          OFF 'SB2'

  /-------   CARTESIAN COORDINATES      FREE, GLOBAL  -------/
                 OFFSET FROM JOINT SB2

     JOINT            X              Y              Z

    BB1              0.000          0.250          0.000

{  428} > GENERATE 4 JOINTS  ID 'BB2',1    Y 13.3372 INC 11.7176          OFF 'BB1'

  /-------   CARTESIAN COORDINATES      FREE, GLOBAL  -------/
                 OFFSET FROM JOINT BB1

     JOINT            X              Y              Z

    BB2              0.000         13.337          0.000
    BB3              0.000         25.055          0.000
    BB4              0.000         36.772          0.000
    BB5              0.000         48.490          0.000

{  429} > GENERATE 4 JOI CYL ID 'BB101',1  R 15.25 TH 45.0, 90.0          OFF 'BB1'

  /------- CYLINDRICAL COORDINATES      FREE, GLOBAL  -------/
                 OFFSET FROM JOINT BB1

     JOINT            R              TH             LY

    BB101           15.250         45.000          0.000
    BB102           15.250        135.000          0.000
    BB103           15.250        225.000          0.000
    BB104           15.250        315.000          0.000

{  430} > GENERATE 4 JOI CYL ID 'BB201',1  R 15.25 TH 45.0, 90.0          OFF 'BB2'

  /------- CYLINDRICAL COORDINATES      FREE, GLOBAL  -------/
                 OFFSET FROM JOINT BB2

     JOINT            R              TH             LY

    BB201           15.250         45.000          0.000
    BB202           15.250        135.000          0.000
    BB203           15.250        225.000          0.000
    BB204           15.250        315.000          0.000

{  431} > REPEAT 3 ID 100 LY 11.7176

  /------- CYLINDRICAL COORDINATES      FREE, GLOBAL  -------/
                 OFFSET FROM JOINT BB2
```

```
     JOINT            R              TH             LY

    BB301           15.250         45.000         11.718
    BB302           15.250        135.000         11.718
    BB303           15.250        225.000         11.718
    BB304           15.250        315.000         11.718

    BB401           15.250         45.000         23.435
    BB402           15.250        135.000         23.435
    BB403           15.250        225.000         23.435
    BB404           15.250        315.000         23.435

    BB501           15.250         45.000         35.153
    BB502           15.250        135.000         35.153
    BB503           15.250        225.000         35.153
    BB504           15.250        315.000         35.153

{  432} >
{  433} > GENERATE 1 JOINTS ID  'BC1',1    Y  0.25                        OFF 'SB3'

  /-------   CARTESIAN COORDINATES      FREE, GLOBAL  -------/
                 OFFSET FROM JOINT SB3

     JOINT            X              Y              Z

    BC1              0.000          0.250          0.000

{  434} > GENERATE 4 JOINTS  ID 'BC2',1    Y 13.3372 INC 11.7176          OFF 'BC1'

  /-------   CARTESIAN COORDINATES      FREE, GLOBAL  -------/
                 OFFSET FROM JOINT BC1

     JOINT            X              Y              Z

    BC2              0.000         13.337          0.000
    BC3              0.000         25.055          0.000
    BC4              0.000         36.772          0.000
    BC5              0.000         48.490          0.000

{  435} > GENERATE 4 JOI CYL ID 'BC101',1  R 15.25 TH 45.0, 90.0          OFF 'BC1'

  /------- CYLINDRICAL COORDINATES      FREE, GLOBAL  -------/
                 OFFSET FROM JOINT BC1

     JOINT            R              TH             LY

    BC101           15.250         45.000          0.000
    BC102           15.250        135.000          0.000
    BC103           15.250        225.000          0.000
    BC104           15.250        315.000          0.000

{  436} > GENERATE 4 JOI CYL ID 'BC201',1  R 15.25 TH 45.0, 90.0          OFF 'BC2'

  /------- CYLINDRICAL COORDINATES      FREE, GLOBAL  -------/
                 OFFSET FROM JOINT BC2

     JOINT            R              TH             LY

    BC201           15.250         45.000          0.000
    BC202           15.250        135.000          0.000
    BC203           15.250        225.000          0.000
    BC204           15.250        315.000          0.000

{  437} > REPEAT 3 ID 100 LY 11.7176

  /------- CYLINDRICAL COORDINATES      FREE, GLOBAL  -------/
                 OFFSET FROM JOINT BC2

     JOINT            R              TH             LY

    BC301           15.250         45.000         11.718
    BC302           15.250        135.000         11.718
    BC303           15.250        225.000         11.718
    BC304           15.250        315.000         11.718

    BC401           15.250         45.000         23.435
    BC402           15.250        135.000         23.435
    BC403           15.250        225.000         23.435
    BC404           15.250        315.000         23.435

    BC501           15.250         45.000         35.153
    BC502           15.250        135.000         35.153
    BC503           15.250        225.000         35.153
    BC504           15.250        315.000         35.153

{  438} >
{  439} > GENERATE 1 JOINTS ID  'BD1',1    Y  0.25                        OFF 'SB4'

  /-------   CARTESIAN COORDINATES      FREE, GLOBAL  -------/
                 OFFSET FROM JOINT SB4

     JOINT            X              Y              Z

    BD1              0.000          0.250          0.000
```

```
{  440} > GENERATE 4 JOINTS  ID 'BD2',1    Y 13.3372 INC 11.7176          OFF 'BD1'

  /-------   CARTESIAN COORDINATES      FREE, GLOBAL  -------/
                 OFFSET FROM JOINT BD1

      JOINT            X              Y              Z

     BD2              0.000         13.337          0.000
     BD3              0.000         25.055          0.000
     BD4              0.000         36.772          0.000
     BD5              0.000         48.490          0.000

{  441} > GENERATE 4 JOI CYL ID 'BD101',1  R 15.25 TH 45.0, 90.0          OFF 'BD1'

  /------- CYLINDRICAL COORDINATES      FREE, GLOBAL  -------/
                 OFFSET FROM JOINT BD1

      JOINT            R              TH             LY

     BD101           15.250         45.000          0.000
     BD102           15.250        135.000          0.000
     BD103           15.250        225.000          0.000
     BD104           15.250        315.000          0.000

{  442} > GENERATE 4 JOI CYL ID 'BD201',1  R 15.25 TH 45.0, 90.0          OFF 'BD2'

  /------- CYLINDRICAL COORDINATES      FREE, GLOBAL  -------/
                 OFFSET FROM JOINT BD2

      JOINT            R              TH             LY

     BD201           15.250         45.000          0.000
     BD202           15.250        135.000          0.000
     BD203           15.250        225.000          0.000
     BD204           15.250        315.000          0.000

{  443} > REPEAT 3 ID 100 LY 11.7176

  /------- CYLINDRICAL COORDINATES      FREE, GLOBAL  -------/
                 OFFSET FROM JOINT BD2

      JOINT            R              TH             LY

     BD301           15.250         45.000         11.718
     BD302           15.250        135.000         11.718
     BD303           15.250        225.000         11.718
     BD304           15.250        315.000         11.718

     BD401           15.250         45.000         23.435
     BD402           15.250        135.000         23.435
     BD403           15.250        225.000         23.435
     BD404           15.250        315.000         23.435

     BD501           15.250         45.000         35.153
     BD502           15.250        135.000         35.153
     BD503           15.250        225.000         35.153
     BD504           15.250        315.000         35.153

{  444} >
{  445} > GENERATE 1 JOINTS ID  'BE1',1    Y  0.25                        OFF 'SB5'

  /-------   CARTESIAN COORDINATES      FREE, GLOBAL  -------/
                 OFFSET FROM JOINT SB5

      JOINT            X              Y              Z

     BE1              0.000          0.250          0.000

{  446} > GENERATE 3 JOINTS  ID 'BE2',1    Y 13.3372 INC 13.3372          OFF 'BE1'

  /-------   CARTESIAN COORDINATES      FREE, GLOBAL  -------/
                 OFFSET FROM JOINT BE1

      JOINT            X              Y              Z

     BE2              0.000         13.337          0.000
     BE3              0.000         26.674          0.000
     BE4              0.000         40.012          0.000

{  447} > GENERATE 4 JOI CYL ID 'BE101',1  R 15.25 TH 45.0, 90.0          OFF 'BE1'

  /------- CYLINDRICAL COORDINATES      FREE, GLOBAL  -------/
                 OFFSET FROM JOINT BE1

      JOINT            R              TH             LY

     BE101           15.250         45.000          0.000
     BE102           15.250        135.000          0.000
     BE103           15.250        225.000          0.000
     BE104           15.250        315.000          0.000

{  448} > REPEAT 3 ID 100 LY 13.3372

  /------- CYLINDRICAL COORDINATES      FREE, GLOBAL  -------/
                 OFFSET FROM JOINT BE1
```

```
     JOINT            R              TH             LY

    BE201           15.250         45.000         13.337
    BE202           15.250        135.000         13.337
    BE203           15.250        225.000         13.337
    BE204           15.250        315.000         13.337

    BE301           15.250         45.000         26.674
    BE302           15.250        135.000         26.674
    BE303           15.250        225.000         26.674
    BE304           15.250        315.000         26.674

    BE401           15.250         45.000         40.012
    BE402           15.250        135.000         40.012
    BE403           15.250        225.000         40.012
    BE404           15.250        315.000         40.012

{  449} >
{  450} > GENERATE 1 JOINTS ID  'BF1',1    Y  0.25                        OFF 'SB6'

  /-------   CARTESIAN COORDINATES      FREE, GLOBAL  -------/
                 OFFSET FROM JOINT SB6

     JOINT            X              Y              Z

    BF1              0.000          0.250          0.000

{  451} > GENERATE 3 JOINTS  ID 'BF2',1    Y 13.3372 INC 13.3372          OFF 'BF1'

  /-------   CARTESIAN COORDINATES      FREE, GLOBAL  -------/
                 OFFSET FROM JOINT BF1

     JOINT            X              Y              Z

    BF2              0.000         13.337          0.000
    BF3              0.000         26.674          0.000
    BF4              0.000         40.012          0.000

{  452} > GENERATE 4 JOI CYL ID 'BF101',1  R 15.25 TH 45.0, 90.0          OFF 'BF1'

  /------- CYLINDRICAL COORDINATES      FREE, GLOBAL  -------/
                 OFFSET FROM JOINT BF1

     JOINT            R              TH             LY

    BF101           15.250         45.000          0.000
    BF102           15.250        135.000          0.000
    BF103           15.250        225.000          0.000
    BF104           15.250        315.000          0.000

{  453} > REPEAT 3 ID 100 LY 13.3372

  /------- CYLINDRICAL COORDINATES      FREE, GLOBAL  -------/
                 OFFSET FROM JOINT BF1

     JOINT            R              TH             LY

    BF201           15.250         45.000         13.337
    BF202           15.250        135.000         13.337
    BF203           15.250        225.000         13.337
    BF204           15.250        315.000         13.337

    BF301           15.250         45.000         26.674
    BF302           15.250        135.000         26.674
    BF303           15.250        225.000         26.674
    BF304           15.250        315.000         26.674

    BF401           15.250         45.000         40.012
    BF402           15.250        135.000         40.012
    BF403           15.250        225.000         40.012
    BF404           15.250        315.000         40.012

{  454} >
{  455} > GENERATE 1 JOINTS ID  'BG1',1    Y  0.25                        OFF 'SB7'

  /-------   CARTESIAN COORDINATES      FREE, GLOBAL  -------/
                 OFFSET FROM JOINT SB7

     JOINT            X              Y              Z

    BG1              0.000          0.250          0.000

{  456} > GENERATE 3 JOINTS  ID 'BG2',1    Y 13.3372 INC 13.3372          OFF 'BG1'

  /-------   CARTESIAN COORDINATES      FREE, GLOBAL  -------/
                 OFFSET FROM JOINT BG1

     JOINT            X              Y              Z

    BG2              0.000         13.337          0.000
    BG3              0.000         26.674          0.000
    BG4              0.000         40.012          0.000

{  457} > GENERATE 4 JOI CYL ID 'BG101',1  R 15.25 TH 45.0, 90.0          OFF 'BG1'

  /------- CYLINDRICAL COORDINATES      FREE, GLOBAL  -------/
```

```
                OFFSET FROM JOINT BG1

     JOINT          R              TH             LY

    BG101          15.250         45.000         0.000
    BG102          15.250        135.000         0.000
    BG103          15.250        225.000         0.000
    BG104          15.250        315.000         0.000

{  458} > REPEAT 3 ID 100 LY 13.3372

  /------- CYLINDRICAL COORDINATES      FREE, GLOBAL  -------/
                OFFSET FROM JOINT BG1

     JOINT          R              TH             LY

    BG201          15.250         45.000        13.337
    BG202          15.250        135.000        13.337
    BG203          15.250        225.000        13.337
    BG204          15.250        315.000        13.337

    BG301          15.250         45.000        26.674
    BG302          15.250        135.000        26.674
    BG303          15.250        225.000        26.674
    BG304          15.250        315.000        26.674

    BG401          15.250         45.000        40.012
    BG402          15.250        135.000        40.012
    BG403          15.250        225.000        40.012
    BG404          15.250        315.000        40.012

{  459} >
{  460} > GENERATE 1 JOINTS ID  'BH1',1    Y  0.25                        OFF 'SB8'

  /-------   CARTESIAN COORDINATES      FREE, GLOBAL  -------/
                OFFSET FROM JOINT SB8

     JOINT          X              Y              Z

    BH1             0.000          0.250          0.000

{  461} > GENERATE 3 JOINTS  ID 'BH2',1    Y 13.3372 INC 13.3372          OFF 'BH1'

  /-------   CARTESIAN COORDINATES      FREE, GLOBAL  -------/
                OFFSET FROM JOINT BH1

     JOINT          X              Y              Z

    BH2             0.000         13.337          0.000
    BH3             0.000         26.674          0.000
    BH4             0.000         40.012          0.000

{  462} > GENERATE 4 JOI CYL ID 'BH101',1  R 15.25 TH 45.0, 90.0          OFF 'BH1'

  /------- CYLINDRICAL COORDINATES      FREE, GLOBAL  -------/
                OFFSET FROM JOINT BH1

     JOINT          R              TH             LY

    BH101          15.250         45.000         0.000
    BH102          15.250        135.000         0.000
    BH103          15.250        225.000         0.000
    BH104          15.250        315.000         0.000

{  463} > REPEAT 3 ID 100 LY 13.3372

  /------- CYLINDRICAL COORDINATES      FREE, GLOBAL  -------/
                OFFSET FROM JOINT BH1

     JOINT          R              TH             LY

    BH201          15.250         45.000        13.337
    BH202          15.250        135.000        13.337
    BH203          15.250        225.000        13.337
    BH204          15.250        315.000        13.337

    BH301          15.250         45.000        26.674
    BH302          15.250        135.000        26.674
    BH303          15.250        225.000        26.674
    BH304          15.250        315.000        26.674

    BH401          15.250         45.000        40.012
    BH402          15.250        135.000        40.012
    BH403          15.250        225.000        40.012
    BH404          15.250        315.000        40.012

{  464} >
{  465} > GENERATE 1 JOINTS ID  'BJ1',1    Y  0.25                        OFF 'SB9'

  /-------   CARTESIAN COORDINATES      FREE, GLOBAL  -------/
                OFFSET FROM JOINT SB9

     JOINT          X              Y              Z

    BJ1             0.000          0.250          0.000
```

```
{  466} > GENERATE 3 JOINTS  ID 'BJ2',1    Y 13.3372 INC 13.3372          OFF 'BJ1'

  /-------   CARTESIAN COORDINATES      FREE, GLOBAL  -------/
                 OFFSET FROM JOINT BJ1

      JOINT            X              Y              Z

     BJ2              0.000         13.337          0.000
     BJ3              0.000         26.674          0.000
     BJ4              0.000         40.012          0.000

{  467} > GENERATE 4 JOI CYL ID 'BJ101',1  R 15.25 TH 45.0, 90.0          OFF 'BJ1'

  /------- CYLINDRICAL COORDINATES      FREE, GLOBAL  -------/
                 OFFSET FROM JOINT BJ1

      JOINT            R              TH             LY

     BJ101           15.250         45.000          0.000
     BJ102           15.250        135.000          0.000
     BJ103           15.250        225.000          0.000
     BJ104           15.250        315.000          0.000

{  468} > REPEAT 3 ID 100 LY 13.3372

  /------- CYLINDRICAL COORDINATES      FREE, GLOBAL  -------/
                 OFFSET FROM JOINT BJ1

      JOINT            R              TH             LY

     BJ201           15.250         45.000         13.337
     BJ202           15.250        135.000         13.337
     BJ203           15.250        225.000         13.337
     BJ204           15.250        315.000         13.337

     BJ301           15.250         45.000         26.674
     BJ302           15.250        135.000         26.674
     BJ303           15.250        225.000         26.674
     BJ304           15.250        315.000         26.674

     BJ401           15.250         45.000         40.012
     BJ402           15.250        135.000         40.012
     BJ403           15.250        225.000         40.012
     BJ404           15.250        315.000         40.012

{  469} >
{  470} > GENERATE 1 JOINTS ID  'CB1',1    Y  0.25                        OFF 'SC1'

  /-------   CARTESIAN COORDINATES      FREE, GLOBAL  -------/
                 OFFSET FROM JOINT SC1

      JOINT            X              Y              Z

     CB1              0.000          0.250          0.000

{  471} > GENERATE 4 JOINTS  ID 'CB2',1    Y 13.3372 INC 11.7176          OFF 'CB1'

  /-------   CARTESIAN COORDINATES      FREE, GLOBAL  -------/
                 OFFSET FROM JOINT CB1

      JOINT            X              Y              Z

     CB2              0.000         13.337          0.000
     CB3              0.000         25.055          0.000
     CB4              0.000         36.772          0.000
     CB5              0.000         48.490          0.000

{  472} > GENERATE 4 JOI CYL ID 'CB101',1  R 15.25 TH 45.0, 90.0          OFF 'CB1'

  /------- CYLINDRICAL COORDINATES      FREE, GLOBAL  -------/
                 OFFSET FROM JOINT CB1

      JOINT            R              TH             LY

     CB101           15.250         45.000          0.000
     CB102           15.250        135.000          0.000
     CB103           15.250        225.000          0.000
     CB104           15.250        315.000          0.000

{  473} > GENERATE 4 JOI CYL ID 'CB201',1  R 15.25 TH 45.0, 90.0          OFF 'CB2'

  /------- CYLINDRICAL COORDINATES      FREE, GLOBAL  -------/
                 OFFSET FROM JOINT CB2

      JOINT            R              TH             LY

     CB201           15.250         45.000          0.000
     CB202           15.250        135.000          0.000
     CB203           15.250        225.000          0.000
     CB204           15.250        315.000          0.000

{  474} > REPEAT 3 ID 100 LY 11.7176

  /------- CYLINDRICAL COORDINATES      FREE, GLOBAL  -------/
                 OFFSET FROM JOINT CB2
```

```
     JOINT            R              TH             LY

    CB301           15.250         45.000         11.718
    CB302           15.250        135.000         11.718
    CB303           15.250        225.000         11.718
    CB304           15.250        315.000         11.718

    CB401           15.250         45.000         23.435
    CB402           15.250        135.000         23.435
    CB403           15.250        225.000         23.435
    CB404           15.250        315.000         23.435

    CB501           15.250         45.000         35.153
    CB502           15.250        135.000         35.153
    CB503           15.250        225.000         35.153
    CB504           15.250        315.000         35.153

{  475} >
{  476} > GENERATE 1 JOINTS ID  'CC1',1    Y  0.25                          OFF 'SC2'

  /-------   CARTESIAN COORDINATES      FREE, GLOBAL  -------/
                 OFFSET FROM JOINT SC2

     JOINT            X              Y              Z

    CC1             0.000          0.250          0.000

{  477} > GENERATE 4 JOINTS  ID 'CC2',1    Y 13.3372 INC 11.7176            OFF 'CC1'

  /-------   CARTESIAN COORDINATES      FREE, GLOBAL  -------/
                 OFFSET FROM JOINT CC1

     JOINT            X              Y              Z

    CC2             0.000         13.337          0.000
    CC3             0.000         25.055          0.000
    CC4             0.000         36.772          0.000
    CC5             0.000         48.490          0.000

{  478} > GENERATE 4 JOI CYL ID 'CC101',1  R 15.25 TH 45.0, 90.0            OFF 'CC1'

  /------- CYLINDRICAL COORDINATES      FREE, GLOBAL  -------/
                 OFFSET FROM JOINT CC1

     JOINT            R              TH             LY

    CC101           15.250         45.000          0.000
    CC102           15.250        135.000          0.000
    CC103           15.250        225.000          0.000
    CC104           15.250        315.000          0.000

{  479} > GENERATE 4 JOI CYL ID 'CC201',1  R 15.25 TH 45.0, 90.0            OFF 'CC2'

  /------- CYLINDRICAL COORDINATES      FREE, GLOBAL  -------/
                 OFFSET FROM JOINT CC2

     JOINT            R              TH             LY

    CC201           15.250         45.000          0.000
    CC202           15.250        135.000          0.000
    CC203           15.250        225.000          0.000
    CC204           15.250        315.000          0.000

{  480} > REPEAT 3 ID 100 LY 11.7176

  /------- CYLINDRICAL COORDINATES      FREE, GLOBAL  -------/
                 OFFSET FROM JOINT CC2

     JOINT            R              TH             LY

    CC301           15.250         45.000         11.718
    CC302           15.250        135.000         11.718
    CC303           15.250        225.000         11.718
    CC304           15.250        315.000         11.718

    CC401           15.250         45.000         23.435
    CC402           15.250        135.000         23.435
    CC403           15.250        225.000         23.435
    CC404           15.250        315.000         23.435

    CC501           15.250         45.000         35.153
    CC502           15.250        135.000         35.153
    CC503           15.250        225.000         35.153
    CC504           15.250        315.000         35.153

{  481} >
{  482} > GENERATE 1 JOINTS ID  'CD1',1    Y  0.25                          OFF 'SC3'

  /-------   CARTESIAN COORDINATES      FREE, GLOBAL  -------/
                 OFFSET FROM JOINT SC3

     JOINT            X              Y              Z

    CD1             0.000          0.250          0.000

{  483} > GENERATE 4 JOINTS  ID 'CD2',1    Y 13.3372 INC 11.7176            OFF 'CD1'
```

```
  /-------   CARTESIAN COORDINATES      FREE, GLOBAL  -------/
                 OFFSET FROM JOINT CD1

     JOINT            X              Y              Z

    CD2              0.000          13.337         0.000
    CD3              0.000          25.055         0.000
    CD4              0.000          36.772         0.000
    CD5              0.000          48.490         0.000

{  484} > GENERATE 4 JOI CYL ID 'CD101',1  R 15.25 TH 45.0, 90.0          OFF 'CD1'

  /------- CYLINDRICAL COORDINATES      FREE, GLOBAL  -------/
                 OFFSET FROM JOINT CD1

     JOINT            R              TH             LY

    CD101           15.250         45.000         0.000
    CD102           15.250        135.000         0.000
    CD103           15.250        225.000         0.000
    CD104           15.250        315.000         0.000

{  485} > GENERATE 4 JOI CYL ID 'CD201',1  R 15.25 TH 45.0, 90.0          OFF 'CD2'

  /------- CYLINDRICAL COORDINATES      FREE, GLOBAL  -------/
                 OFFSET FROM JOINT CD2

     JOINT            R              TH             LY

    CD201           15.250         45.000         0.000
    CD202           15.250        135.000         0.000
    CD203           15.250        225.000         0.000
    CD204           15.250        315.000         0.000

{  486} > REPEAT 3 ID 100 LY 11.7176

  /------- CYLINDRICAL COORDINATES      FREE, GLOBAL  -------/
                 OFFSET FROM JOINT CD2

     JOINT            R              TH             LY

    CD301           15.250         45.000        11.718
    CD302           15.250        135.000        11.718
    CD303           15.250        225.000        11.718
    CD304           15.250        315.000        11.718

    CD401           15.250         45.000        23.435
    CD402           15.250        135.000        23.435
    CD403           15.250        225.000        23.435
    CD404           15.250        315.000        23.435

    CD501           15.250         45.000        35.153
    CD502           15.250        135.000        35.153
    CD503           15.250        225.000        35.153
    CD504           15.250        315.000        35.153

{  487} >
{  488} > GENERATE 1 JOINTS ID  'CE1',1    Y  0.25                         OFF 'SC4'

  /-------   CARTESIAN COORDINATES      FREE, GLOBAL  -------/
                 OFFSET FROM JOINT SC4

     JOINT            X              Y              Z

    CE1              0.000          0.250          0.000

{  489} > GENERATE 3 JOINTS  ID 'CE2',1    Y 13.3372 INC 13.3372          OFF 'CE1'

  /-------   CARTESIAN COORDINATES      FREE, GLOBAL  -------/
                 OFFSET FROM JOINT CE1

     JOINT            X              Y              Z

    CE2              0.000          13.337         0.000
    CE3              0.000          26.674         0.000
    CE4              0.000          40.012         0.000

{  490} > GENERATE 4 JOI CYL ID 'CE101',1  R 15.25 TH 45.0, 90.0          OFF 'CE1'

  /------- CYLINDRICAL COORDINATES      FREE, GLOBAL  -------/
                 OFFSET FROM JOINT CE1

     JOINT            R              TH             LY

    CE101           15.250         45.000         0.000
    CE102           15.250        135.000         0.000
    CE103           15.250        225.000         0.000
    CE104           15.250        315.000         0.000

{  491} > REPEAT 3 ID 100 LY 13.3372

  /------- CYLINDRICAL COORDINATES      FREE, GLOBAL  -------/
                 OFFSET FROM JOINT CE1

     JOINT            R              TH             LY
```

```
    CE201          15.250        45.000        13.337
    CE202          15.250       135.000        13.337
    CE203          15.250       225.000        13.337
    CE204          15.250       315.000        13.337

    CE301          15.250        45.000        26.674
    CE302          15.250       135.000        26.674
    CE303          15.250       225.000        26.674
    CE304          15.250       315.000        26.674

    CE401          15.250        45.000        40.012
    CE402          15.250       135.000        40.012
    CE403          15.250       225.000        40.012
    CE404          15.250       315.000        40.012

{  492} >
{  493} > GENERATE 1 JOINTS ID  'CF1',1    Y  0.25                        OFF 'SC5'

  /-------   CARTESIAN COORDINATES      FREE, GLOBAL  -------/
                 OFFSET FROM JOINT SC5

     JOINT           X             Y             Z

    CF1            0.000         0.250         0.000

{  494} > GENERATE 3 JOINTS  ID 'CF2',1    Y 13.3372 INC 13.3372          OFF 'CF1'

  /-------   CARTESIAN COORDINATES      FREE, GLOBAL  -------/
                 OFFSET FROM JOINT CF1

     JOINT           X             Y             Z

    CF2            0.000        13.337         0.000
    CF3            0.000        26.674         0.000
    CF4            0.000        40.012         0.000

{  495} > GENERATE 4 JOI CYL ID 'CF101',1  R 15.25 TH 45.0, 90.0          OFF 'CF1'

  /------- CYLINDRICAL COORDINATES      FREE, GLOBAL  -------/
                 OFFSET FROM JOINT CF1

     JOINT           R             TH            LY

    CF101         15.250        45.000         0.000
    CF102         15.250       135.000         0.000
    CF103         15.250       225.000         0.000
    CF104         15.250       315.000         0.000

{  496} > REPEAT 3 ID 100 LY 13.3372

  /------- CYLINDRICAL COORDINATES      FREE, GLOBAL  -------/
                 OFFSET FROM JOINT CF1

     JOINT           R             TH            LY

    CF201         15.250        45.000        13.337
    CF202         15.250       135.000        13.337
    CF203         15.250       225.000        13.337
    CF204         15.250       315.000        13.337

    CF301         15.250        45.000        26.674
    CF302         15.250       135.000        26.674
    CF303         15.250       225.000        26.674
    CF304         15.250       315.000        26.674

    CF401         15.250        45.000        40.012
    CF402         15.250       135.000        40.012
    CF403         15.250       225.000        40.012
    CF404         15.250       315.000        40.012

{  497} >
{  498} > GENERATE 1 JOINTS ID  'CG1',1    Y  0.25                        OFF 'SC6'

  /-------   CARTESIAN COORDINATES      FREE, GLOBAL  -------/
                 OFFSET FROM JOINT SC6

     JOINT           X             Y             Z

    CG1            0.000         0.250         0.000

{  499} > GENERATE 3 JOINTS  ID 'CG2',1    Y 13.3372 INC 13.3372          OFF 'CG1'

  /-------   CARTESIAN COORDINATES      FREE, GLOBAL  -------/
                 OFFSET FROM JOINT CG1

     JOINT           X             Y             Z

    CG2            0.000        13.337         0.000
    CG3            0.000        26.674         0.000
    CG4            0.000        40.012         0.000

{  500} > GENERATE 4 JOI CYL ID 'CG101',1  R 15.25 TH 45.0, 90.0          OFF 'CG1'

  /------- CYLINDRICAL COORDINATES      FREE, GLOBAL  -------/
                 OFFSET FROM JOINT CG1
```

```
     JOINT            R              TH             LY

    CG101           15.250         45.000          0.000
    CG102           15.250        135.000          0.000
    CG103           15.250        225.000          0.000
    CG104           15.250        315.000          0.000

{  501} > REPEAT 3 ID 100 LY 13.3372

  /------- CYLINDRICAL COORDINATES      FREE, GLOBAL  -------/
                 OFFSET FROM JOINT CG1

     JOINT            R              TH             LY

    CG201           15.250         45.000         13.337
    CG202           15.250        135.000         13.337
    CG203           15.250        225.000         13.337
    CG204           15.250        315.000         13.337

    CG301           15.250         45.000         26.674
    CG302           15.250        135.000         26.674
    CG303           15.250        225.000         26.674
    CG304           15.250        315.000         26.674

    CG401           15.250         45.000         40.012
    CG402           15.250        135.000         40.012
    CG403           15.250        225.000         40.012
    CG404           15.250        315.000         40.012

{  502} >
{  503} > GENERATE 1 JOINTS ID  'CH1',1    Y  0.25                        OFF 'SC7'

  /-------   CARTESIAN COORDINATES      FREE, GLOBAL  -------/
                 OFFSET FROM JOINT SC7

     JOINT            X              Y              Z

    CH1              0.000          0.250          0.000

{  504} > GENERATE 3 JOINTS  ID 'CH2',1    Y 13.3372 INC 13.3372          OFF 'CH1'

  /-------   CARTESIAN COORDINATES      FREE, GLOBAL  -------/
                 OFFSET FROM JOINT CH1

     JOINT            X              Y              Z

    CH2              0.000         13.337          0.000
    CH3              0.000         26.674          0.000
    CH4              0.000         40.012          0.000

{  505} > GENERATE 4 JOI CYL ID 'CH101',1  R 15.25 TH 45.0, 90.0          OFF 'CH1'

  /------- CYLINDRICAL COORDINATES      FREE, GLOBAL  -------/
                 OFFSET FROM JOINT CH1

     JOINT            R              TH             LY

    CH101           15.250         45.000          0.000
    CH102           15.250        135.000          0.000
    CH103           15.250        225.000          0.000
    CH104           15.250        315.000          0.000

{  506} > REPEAT 3 ID 100 LY 13.3372

  /------- CYLINDRICAL COORDINATES      FREE, GLOBAL  -------/
                 OFFSET FROM JOINT CH1

     JOINT            R              TH             LY

    CH201           15.250         45.000         13.337
    CH202           15.250        135.000         13.337
    CH203           15.250        225.000         13.337
    CH204           15.250        315.000         13.337

    CH301           15.250         45.000         26.674
    CH302           15.250        135.000         26.674
    CH303           15.250        225.000         26.674
    CH304           15.250        315.000         26.674

    CH401           15.250         45.000         40.012
    CH402           15.250        135.000         40.012
    CH403           15.250        225.000         40.012
    CH404           15.250        315.000         40.012

{  507} >
{  508} > $==============================BEAM MEMBERS==========================================
{  509} > MEMBER INCIDENCES
{  510} > GENERATE 2 MEMBERS LIST
{  511} > 'BEAM1'   1  12
{  512} > 'BEAM2'  12  23

    /----------------  MEMBER INCIDENCES ----------------/

        MEMBER          INCIDENCES
```

```
        BEAM1        1         12
        BEAM2        12        23

{  513} >
{  514} > GENERATE 3 MEMBERS LIST
{  515} > 'BEAM3'   2  13
{  516} > 'BEAM4'  13  24
{  517} > 'BEAM5'  24  35

     /----------------  MEMBER INCIDENCES ----------------/

         MEMBER          INCIDENCES

        BEAM3        2         13
        BEAM4        13        24
        BEAM5        24        35

{  518} >
{  519} > REPEAT 3 LIST
{  520} >  3  1   1
{  521} >  6  2   2
{  522} >  9  3   3

     /----------------  MEMBER INCIDENCES ----------------/

         MEMBER          INCIDENCES

        BEAM6        3         14
        BEAM7        14        25
        BEAM8        25        36

        BEAM9        4         15
        BEAM10       15        26
        BEAM11       26        37

        BEAM12       5         16
        BEAM13       16        27
        BEAM14       27        38

{  523} >
{  524} > GENERATE 3 MEMBERS LIST
{  525} > 'BEAM15'   7  18
{  526} > 'BEAM16'  18  29
{  527} > 'BEAM17'  29  40

     /----------------  MEMBER INCIDENCES ----------------/

         MEMBER          INCIDENCES

        BEAM15       7         18
        BEAM16       18        29
        BEAM17       29        40

{  528} >
{  529} > REPEAT 3 LIST
{  530} >  3  1   1
{  531} >  6  2   2
{  532} >  9  3   3

     /----------------  MEMBER INCIDENCES ----------------/

         MEMBER          INCIDENCES

        BEAM18       8         19
        BEAM19       19        30
        BEAM20       30        41

        BEAM21       9         20
        BEAM22       20        31
        BEAM23       31        42

        BEAM24       10        21
        BEAM25       21        32
        BEAM26       32        43

{  533} >
{  534} > GENERATE 3 MEMBERS LIST
{  535} > 'BEAM27'  11  22
{  536} > 'BEAM28'  22  33
{  537} > 'BEAM29'  28  39

     /----------------  MEMBER INCIDENCES ----------------/

         MEMBER          INCIDENCES

        BEAM27       11        22
        BEAM28       22        33
        BEAM29       28        39

{  538} > $==============================BOTTOM RIGID BEAM MEMBERS==============================
{  539} > MEMBER INCIDENCES
{  540} > GENERATE 3 MEMBERS LIST
{  541} > 'RIGD1'    1   'WA1'
{  542} > 'RIGD2'   12   'WA12'
{  543} > 'RIGD3'   23   'WA23'
```

```
     /----------------  MEMBER INCIDENCES ----------------/

         MEMBER          INCIDENCES

        RIGD1        1         WA1
        RIGD2        12        WA12
        RIGD3        23        WA23

{  544} >
{  545} > GENERATE 4 MEMBERS LIST
{  546} > 'RIGD4'    2   'WA2'
{  547} > 'RIGD5'   13   'WA13'
{  548} > 'RIGD6'   24   'WA24'
{  549} > 'RIGD7'   35   'WA35'

     /----------------  MEMBER INCIDENCES ----------------/

         MEMBER          INCIDENCES

        RIGD4        2         WA2
        RIGD5        13        WA13
        RIGD6        24        WA24
        RIGD7        35        WA35

{  550} >
{  551} > REPEAT 3 LIST
{  552} >  4   1   1
{  553} >  8   2   2
{  554} > 12   3   3

     /----------------  MEMBER INCIDENCES ----------------/

         MEMBER          INCIDENCES

        RIGD8        3         WA3
        RIGD9        14        WA14
        RIGD10       25        WA25
        RIGD11       36        WA36

        RIGD12       4         WA4
        RIGD13       15        WA15
        RIGD14       26        WA26
        RIGD15       37        WA37

        RIGD16       5         WA5
        RIGD17       16        WA16
        RIGD18       27        WA27
        RIGD19       38        WA38

{  555} >
{  556} > GENERATE 4 MEMBERS LIST
{  557} > 'RIGD20'    7   'WA7'
{  558} > 'RIGD21'   18   'WA18'
{  559} > 'RIGD22'   29   'WA29'
{  560} > 'RIGD23'   40   'WA40'

     /----------------  MEMBER INCIDENCES ----------------/

         MEMBER          INCIDENCES

        RIGD20       7         WA7
        RIGD21       18        WA18
        RIGD22       29        WA29
        RIGD23       40        WA40

{  561} >
{  562} > REPEAT 3 LIST
{  563} >  4   1   1
{  564} >  8   2   2
{  565} > 12   3   3

     /----------------  MEMBER INCIDENCES ----------------/

         MEMBER          INCIDENCES

        RIGD24       8         WA8
        RIGD25       19        WA19
        RIGD26       30        WA30
        RIGD27       41        WA41

        RIGD28       9         WA9
        RIGD29       20        WA20
        RIGD30       31        WA31
        RIGD31       42        WA42

        RIGD32       10        WA10
        RIGD33       21        WA21
        RIGD34       32        WA32
        RIGD35       43        WA43

{  566} >
{  567} > GENERATE 5 MEMBERS LIST
{  568} > 'RIGD36'   11   'WA11'
{  569} > 'RIGD37'   22   'WA22'
{  570} > 'RIGD38'   33   'WA33'
{  571} >
```

```
{  572} > $==============================TOP RIGID BEAM MEMBERS==============================
{  573} > GENERATE 3 MEMBERS LIST

     /-----------------  MEMBER INCIDENCES -----------------/

         MEMBER          INCIDENCES

        RIGD36       11        WA11
        RIGD37       22        WA22
        RIGD38       33        WA33

{  574} > 'RIGD39'    1   'TF1'
{  575} > 'RIGD40'   12   'TF12'
{  576} > 'RIGD41'   23   'TF23'

     /-----------------  MEMBER INCIDENCES -----------------/

         MEMBER          INCIDENCES

        RIGD39       1         TF1
        RIGD40       12        TF12
        RIGD41       23        TF23

{  577} >
{  578} > GENERATE 4 MEMBERS LIST
{  579} > 'RIGD42'    2   'TF2'
{  580} > 'RIGD43'   13   'TF13'
{  581} > 'RIGD44'   24   'TF24'
{  582} > 'RIGD45'   35   'TF35'

     /-----------------  MEMBER INCIDENCES -----------------/

         MEMBER          INCIDENCES

        RIGD42       2         TF2
        RIGD43       13        TF13
        RIGD44       24        TF24
        RIGD45       35        TF35

{  583} >
{  584} > REPEAT 3 LIST
{  585} >  4   1   1
{  586} >  8   2   2
{  587} > 12   3   3

     /-----------------  MEMBER INCIDENCES -----------------/

         MEMBER          INCIDENCES

        RIGD46       3         TF3
        RIGD47       14        TF14
        RIGD48       25        TF25
        RIGD49       36        TF36

        RIGD50       4         TF4
        RIGD51       15        TF15
        RIGD52       26        TF26
        RIGD53       37        TF37

        RIGD54       5         TF5
        RIGD55       16        TF16
        RIGD56       27        TF27
        RIGD57       38        TF38

{  588} >
{  589} > GENERATE 4 MEMBERS LIST
{  590} > 'RIGD58'    7   'TF7'
{  591} > 'RIGD59'   18   'TF18'
{  592} > 'RIGD60'   29   'TF29'
{  593} > 'RIGD61'   40   'TF40'

     /-----------------  MEMBER INCIDENCES -----------------/

         MEMBER          INCIDENCES

        RIGD58       7         TF7
        RIGD59       18        TF18
        RIGD60       29        TF29
        RIGD61       40        TF40

{  594} >
{  595} > REPEAT 3 LIST
{  596} >  4   1   1
{  597} >  8   2   2
{  598} > 12   3   3

     /-----------------  MEMBER INCIDENCES -----------------/

         MEMBER          INCIDENCES

        RIGD62       8         TF8
        RIGD63       19        TF19
        RIGD64       30        TF30
        RIGD65       41        TF41

        RIGD66       9         TF9
```

```
        RIGD67       20        TF20
        RIGD68       31        TF31
        RIGD69       42        TF42

        RIGD70       10        TF10
        RIGD71       21        TF21
        RIGD72       32        TF32
        RIGD73       43        TF43

{  599} >
{  600} > GENERATE 5 MEMBERS LIST
{  601} > 'RIGD74'   11   'TF11'
{  602} > 'RIGD75'   22   'TF22'
{  603} > 'RIGD76'   33   'TF33'
{  604} >
{  605} > GENERATE 4 MEMBERS LIST

     /----------------  MEMBER INCIDENCES -----------------/

         MEMBER          INCIDENCES

        RIGD74       11        TF11
        RIGD75       22        TF22
        RIGD76       33        TF33

{  606} > 'RIGD186'   28   'WA28'
{  607} > 'RIGD187'   39   'WA39'
{  608} > 'RIGD188'   28   'TF28'
{  609} > 'RIGD189'   39   'TF39'

     /----------------  MEMBER INCIDENCES -----------------/

         MEMBER          INCIDENCES

        RIGD186      28        WA28
        RIGD187      39        WA39
        RIGD188      28        TF28
        RIGD189      39        TF39

{  610} >
{  611} > $=============RIGID MEMBERS BETWEEN LOWER PLATE AND TOP FLANGE===================
{  612} > GENERATE 10 MEMBERS LIST
{  613} > 'RIGD77'   'TF1'  'BP1'
{  614} > 'RIGD78'   'TF2'  'BP2'
{  615} > 'RIGD79'   'TF3'  'BP3'
{  616} > 'RIGD80'   'TF4'  'BP4'
{  617} > 'RIGD81'   'TF5'  'BP5'
{  618} > 'RIGD82'   'TF7'  'BP7'
{  619} > 'RIGD83'   'TF8'  'BP8'
{  620} > 'RIGD84'   'TF9'  'BP9'
{  621} > 'RIGD85'   'TF10' 'BP10'
{  622} > 'RIGD86'   'TF11' 'BP11'

     /----------------  MEMBER INCIDENCES -----------------/

         MEMBER          INCIDENCES

        RIGD77       TF1       BP1
        RIGD78       TF2       BP2
        RIGD79       TF3       BP3
        RIGD80       TF4       BP4
        RIGD81       TF5       BP5
        RIGD82       TF7       BP7
        RIGD83       TF8       BP8
        RIGD84       TF9       BP9
        RIGD85       TF10      BP10
        RIGD86       TF11      BP11

{  623} >
{  624} > REPEAT 1 LIST
{  625} > 10   11   11

     /----------------  MEMBER INCIDENCES -----------------/

         MEMBER          INCIDENCES

        RIGD87       TF12      BP12
        RIGD88       TF13      BP13
        RIGD89       TF14      BP14
        RIGD90       TF15      BP15
        RIGD91       TF16      BP16
        RIGD92       TF18      BP18
        RIGD93       TF19      BP19
        RIGD94       TF20      BP20
        RIGD95       TF21      BP21
        RIGD96       TF22      BP22

{  626} >
{  627} > GENERATE 2 MEMBERS LIST
{  628} > 'RIGD97'   'TF23'  'BP23'
{  629} > 'RIGD98'   'TF24'  'BP24'

     /----------------  MEMBER INCIDENCES -----------------/

         MEMBER          INCIDENCES
```

```
        RIGD97       TF23      BP23
        RIGD98       TF24      BP24

{  630} >
{  631} > GENERATE 9 MEMBERS LIST
{  632} > 'RIGD99'   'TF25'  'BP25'
{  633} > 'RIGD100'  'TF26'  'BP26'
{  634} > 'RIGD101'  'TF27'  'BP27'
{  635} > 'RIGD102'  'TF28'  'BP28'
{  636} > 'RIGD103'  'TF29'  'BP29'
{  637} > 'RIGD104'  'TF30'  'BP30'
{  638} > 'RIGD105'  'TF31'  'BP31'
{  639} > 'RIGD106'  'TF32'  'BP32'
{  640} > 'RIGD107'  'TF33'  'BP33'

     /----------------  MEMBER INCIDENCES -----------------/

         MEMBER          INCIDENCES

        RIGD99       TF25      BP25
        RIGD100      TF26      BP26
        RIGD101      TF27      BP27
        RIGD102      TF28      BP28
        RIGD103      TF29      BP29
        RIGD104      TF30      BP30
        RIGD105      TF31      BP31
        RIGD106      TF32      BP32
        RIGD107      TF33      BP33

{  641} >
{  642} > GENERATE 9 MEMBERS LIST
{  643} > 'RIGD108'  'TF35'  'BP35'
{  644} > 'RIGD109'  'TF36'  'BP36'
{  645} > 'RIGD110'  'TF37'  'BP37'
{  646} >
{  647} > 'RIGD163'  'TF38'  'BP38'
{  648} > 'RIGD164'  'TF39'  'BP39'
{  649} > 'RIGD165'  'TF40'  'BP40'
{  650} > 'RIGD166'  'TF41'  'BP41'
{  651} > 'RIGD167'  'TF42'  'BP42'
{  652} > 'RIGD168'  'TF43'  'BP43'

     /----------------  MEMBER INCIDENCES -----------------/

         MEMBER          INCIDENCES

        RIGD108      TF35      BP35
        RIGD109      TF36      BP36
        RIGD110      TF37      BP37
        RIGD163      TF38      BP38
        RIGD164      TF39      BP39
        RIGD165      TF40      BP40
        RIGD166      TF41      BP41
        RIGD167      TF42      BP42
        RIGD168      TF43      BP43

{  653} >
{  654} > $===========RIGID MEMBERS BETWEEN LOWER PLATE  AND PLENUM CHANNELS==================
{  655} > GENERATE 1 MEMBERS LIST
{  656} > 'RIGD111'   'BP1'   'C1'

     /----------------  MEMBER INCIDENCES -----------------/

         MEMBER          INCIDENCES

        RIGD111      BP1       C1

{  657} > REPEAT 25 LIST
{  658} >   1    1    1
{  659} >   2    2    2
{  660} >   3    3    3
{  661} >   4    4    4
{  662} >   5    5    5
{  663} >   6    6    6
{  664} >   7    7    7
{  665} >   8    8    8
{  666} >   9    9    9
{  667} >  10   10   10
{  668} >  11   11   11
{  669} >  12   21   12
{  670} >  13   22   13
{  671} >  14   23   14
{  672} >  15   31   15
{  673} >  16   32   16
{  674} >  17   34   17
{  675} >  18   35   18
{  676} >  19   36   19
{  677} >  20   37   20
{  678} >  21   38   21
{  679} >  22   39   22
{  680} >  23   40   23
{  681} >  24   41   24
{  682} >  25   42   25

     /----------------  MEMBER INCIDENCES -----------------/
```

```
        MEMBER          INCIDENCES

       RIGD112      BP2       C2

       RIGD113      BP3       C3

       RIGD114      BP4       C4

       RIGD115      BP5       C5

       RIGD116      BP6       C6

       RIGD117      BP7       C7

       RIGD118      BP8       C8

       RIGD119      BP9       C9

       RIGD120      BP10      C10

       RIGD121      BP11      C11

       RIGD122      BP12      C12

       RIGD123      BP22      C13

       RIGD124      BP23      C14

       RIGD125      BP24      C15

       RIGD126      BP32      C16

       RIGD127      BP33      C17

       RIGD128      BP35      C18

       RIGD129      BP36      C19

       RIGD130      BP37      C20

       RIGD131      BP38      C21

       RIGD132      BP39      C22

       RIGD133      BP40      C23

       RIGD134      BP41      C24

       RIGD135      BP42      C25

       RIGD136      BP43      C26

{  683} >
{  684} > $===========RIGID MEMBERS BETWEEN PLENUM CHANNELS AND TOP PLATE===================
{  685} > GENERATE 1 MEMBERS LIST
{  686} > 'RIGD137'   'C1'   'TP1'

     /----------------  MEMBER INCIDENCES -----------------/

        MEMBER          INCIDENCES

       RIGD137      C1        TP1

{  687} > REPEAT 25 LIST
{  688} >   1    1    1
{  689} >   2    2    2
{  690} >   3    3    3
{  691} >   4    4    4
{  692} >   5    5    5
{  693} >   6    6    6
{  694} >   7    7    7
{  695} >   8    8    8
{  696} >   9    9    9
{  697} >  10   10   10
{  698} >  11   11   11
{  699} >  12   12   21
{  700} >  13   13   22
{  701} >  14   14   23
{  702} >  15   15   31
{  703} >  16   16   32
{  704} >  17   17   34
{  705} >  18   18   35
{  706} >  19   19   36
{  707} >  20   20   37
{  708} >  21   21   38
{  709} >  22   22   39
{  710} >  23   23   40
{  711} >  24   24   41
{  712} >  25   25   42

     /----------------  MEMBER INCIDENCES -----------------/

        MEMBER          INCIDENCES

       RIGD138      C2        TP2
```

```
        RIGD139      C3        TP3

        RIGD140      C4        TP4

        RIGD141      C5        TP5

        RIGD142      C6        TP6

        RIGD143      C7        TP7

        RIGD144      C8        TP8

        RIGD145      C9        TP9

        RIGD146      C10       TP10

        RIGD147      C11       TP11

        RIGD148      C12       TP12

        RIGD149      C13       TP22

        RIGD150      C14       TP23

        RIGD151      C15       TP24

        RIGD152      C16       TP32

        RIGD153      C17       TP33

        RIGD154      C18       TP35

        RIGD155      C19       TP36

        RIGD156      C20       TP37

        RIGD157      C21       TP38

        RIGD158      C22       TP39

        RIGD159      C23       TP40

        RIGD160      C24       TP41

        RIGD161      C25       TP42

        RIGD162      C26       TP43

{  713} >
{  714} > GENERATE 3 MEMBERS LIST
{  715} > 'RIGD182'   'TC27'  'C27'
{  716} > 'RIGD183'   'TC28'  'C28'
{  717} > 'RIGD184'   'TC29'  'C29'

     /----------------  MEMBER INCIDENCES -----------------/

         MEMBER          INCIDENCES

        RIGD182      TC27      C27
        RIGD183      TC28      C28
        RIGD184      TC29      C29

{  718} >
{  719} >
{  720} > $=========================STUD RIGID MEMBERS=========================================
{  721} > MEMBER INCIDENCES
{  722} > GENERATE 14 MEMBERS LIST
{  723} > 'SRGD1'   'TP1'   'S1'
{  724} > 'SRGD2'   'TP2'   'S2'
{  725} > 'SRGD3'   'TP2'   'S3'
{  726} > 'SRGD4'   'TP3'   'S4'
{  727} > 'SRGD5'   'TP3'   'S5'
{  728} > 'SRGD6'   'TP4'   'S6'
{  729} > 'SRGD7'   'TP5'   'S7'
{  730} > 'SRGD8'   'TP6'   'S8'
{  731} > 'SRGD9'   'TP7'   'S9'
{  732} > 'SRGD10'  'TP8'   'S10'
{  733} > 'SRGD11'  'TP9'   'S11'
{  734} > 'SRGD12'  'TP10'  'S12'
{  735} > 'SRGD13'  'TP10'  'S13'
{  736} > 'SRGD14'  'TP11'  'S14'

     /----------------  MEMBER INCIDENCES -----------------/

         MEMBER          INCIDENCES

        SRGD1        TP1       S1
        SRGD2        TP2       S2
        SRGD3        TP2       S3
        SRGD4        TP3       S4
        SRGD5        TP3       S5
        SRGD6        TP4       S6
        SRGD7        TP5       S7
        SRGD8        TP6       S8
        SRGD9        TP7       S9
        SRGD10       TP8       S10
```

```
        SRGD11       TP9       S11
        SRGD12       TP10      S12
        SRGD13       TP10      S13
        SRGD14       TP11      S14

{  737} >
{  738} > REPEAT 1 LIST
{  739} >  14   11   14

     /----------------  MEMBER INCIDENCES ----------------/

         MEMBER          INCIDENCES

        SRGD15       TP12      S15
        SRGD16       TP13      S16
        SRGD17       TP13      S17
        SRGD18       TP14      S18
        SRGD19       TP14      S19
        SRGD20       TP15      S20
        SRGD21       TP16      S21
        SRGD22       TP17      S22
        SRGD23       TP18      S23
        SRGD24       TP19      S24
        SRGD25       TP20      S25
        SRGD26       TP21      S26
        SRGD27       TP21      S27
        SRGD28       TP22      S28

{  740} >
{  741} > GENERATE 18 MEMBERS LIST
{  742} > 'SRGD29'  'TP12'  'S29'
{  743} > 'SRGD30'  'TP13'  'S30'
{  744} > 'SRGD31'  'TP13'  'S31'
{  745} > 'SRGD32'  'TP14'  'S32'
{  746} > 'SRGD33'  'TP14'  'S33'
{  747} > 'SRGD34'  'TP15'  'S34'
{  748} > 'SRGD35'  'TP15'  'S35'
{  749} > 'SRGD36'  'TP16'  'S36'
{  750} > 'SRGD37'  'TP16'  'S37'
{  751} > 'SRGD38'  'TP17'  'S38'
{  752} > 'SRGD39'  'TP17'  'S39'
{  753} > 'SRGD40'  'TP18'  'S40'
{  754} > 'SRGD41'  'TP18'  'S41'
{  755} > 'SRGD42'  'TP19'  'S42'
{  756} > 'SRGD43'  'TP20'  'S43'
{  757} > 'SRGD44'  'TP21'  'S44'
{  758} > 'SRGD45'  'TP21'  'S45'
{  759} > 'SRGD46'  'TP22'  'S46'

     /----------------  MEMBER INCIDENCES ----------------/

         MEMBER          INCIDENCES

        SRGD29       TP12      S29
        SRGD30       TP13      S30
        SRGD31       TP13      S31
        SRGD32       TP14      S32
        SRGD33       TP14      S33
        SRGD34       TP15      S34
        SRGD35       TP15      S35
        SRGD36       TP16      S36
        SRGD37       TP16      S37
        SRGD38       TP17      S38
        SRGD39       TP17      S39
        SRGD40       TP18      S40
        SRGD41       TP18      S41
        SRGD42       TP19      S42
        SRGD43       TP20      S43
        SRGD44       TP21      S44
        SRGD45       TP21      S45
        SRGD46       TP22      S46

{  760} >
{  761} > REPEAT 1 LIST
{  762} >  18   11   18

     /----------------  MEMBER INCIDENCES ----------------/

         MEMBER          INCIDENCES

        SRGD47       TP23      S47
        SRGD48       TP24      S48
        SRGD49       TP24      S49
        SRGD50       TP25      S50
        SRGD51       TP25      S51
        SRGD52       TP26      S52
        SRGD53       TP26      S53
        SRGD54       TP27      S54
        SRGD55       TP27      S55
        SRGD56       TP28      S56
        SRGD57       TP28      S57
        SRGD58       TP29      S58
        SRGD59       TP29      S59
        SRGD60       TP30      S60
        SRGD61       TP31      S61
        SRGD62       TP32      S62
```

```
        SRGD63       TP32      S63
        SRGD64       TP33      S64

{  763} >
{  764} > GENERATE 14 MEMBERS LIST
{  765} > 'SRGD65'  'TP24'  'S65'
{  766} > 'SRGD66'  'TP25'  'S66'
{  767} > 'SRGD67'  'TP25'  'S67'
{  768} > 'SRGD68'  'TP26'  'S68'
{  769} > 'SRGD69'  'TP26'  'S69'
{  770} > 'SRGD70'  'TP27'  'S70'
{  771} > 'SRGD71'  'TP27'  'S71'
{  772} > 'SRGD72'  'TP28'  'S72'
{  773} > 'SRGD73'  'TP28'  'S73'
{  774} > 'SRGD74'  'TP29'  'S74'
{  775} > 'SRGD75'  'TP29'  'S75'
{  776} > 'SRGD76'  'TP30'  'S76'
{  777} > 'SRGD77'  'TP31'  'S77'
{  778} > 'SRGD78'  'TP32'  'S78'

     /----------------  MEMBER INCIDENCES ----------------/

         MEMBER          INCIDENCES

        SRGD65       TP24      S65
        SRGD66       TP25      S66
        SRGD67       TP25      S67
        SRGD68       TP26      S68
        SRGD69       TP26      S69
        SRGD70       TP27      S70
        SRGD71       TP27      S71
        SRGD72       TP28      S72
        SRGD73       TP28      S73
        SRGD74       TP29      S74
        SRGD75       TP29      S75
        SRGD76       TP30      S76
        SRGD77       TP31      S77
        SRGD78       TP32      S78

{  779} >
{  780} > REPEAT 1 LIST
{  781} >  14   11   14

     /----------------  MEMBER INCIDENCES ----------------/

         MEMBER          INCIDENCES

        SRGD79       TP35      S79
        SRGD80       TP36      S80
        SRGD81       TP36      S81
        SRGD82       TP37      S82
        SRGD83       TP37      S83
        SRGD84       TP38      S84
        SRGD85       TP38      S85
        SRGD86       TP39      S86
        SRGD87       TP39      S87
        SRGD88       TP40      S88
        SRGD89       TP40      S89
        SRGD90       TP41      S90
        SRGD91       TP42      S91
        SRGD92       TP43      S92

{  782} >
{  783} > GENERATE 2 MEMBERS LIST
{  784} > 'SRGD93'   'P102'  'TP17'
{  785} > 'SRGD94'   'P105'  'TP28'

     /----------------  MEMBER INCIDENCES ----------------/

         MEMBER          INCIDENCES

        SRGD93       P102      TP17
        SRGD94       P105      TP28

{  786} >
{  787} > GENERATE 8 MEMBERS LIST
{  788} > 'SRGD95'   'TP4'   'S93'
{  789} > 'SRGD96'   'TP5'   'S94'
{  790} > 'SRGD97'   'TP6'   'S95'
{  791} > 'SRGD98'   'TP7'   'S96'
{  792} > 'SRGD99'   'TP15'  'S97'
{  793} > 'SRGD100'  'TP16'  'S98'
{  794} > 'SRGD101'  'TP17'  'S99'
{  795} > 'SRGD102'  'TP18'  'S100'

     /----------------  MEMBER INCIDENCES ----------------/

         MEMBER          INCIDENCES

        SRGD95       TP4       S93
        SRGD96       TP5       S94
        SRGD97       TP6       S95
        SRGD98       TP7       S96
        SRGD99       TP15      S97
        SRGD100      TP16      S98
        SRGD101      TP17      S99
```

```
        SRGD102      TP18      S100

{  796} >
{  797} > GENERATE 3 MEMBERS LIST
{  798} > 'SRGD103'  'SR193' 'SR201'
{  799} > 'SRGD104'  'SR201' 'SR205'
{  800} > 'SRGD105'  'SR205' 'SR197'

     /----------------  MEMBER INCIDENCES ----------------/

         MEMBER          INCIDENCES

        SRGD103      SR193     SR201
        SRGD104      SR201     SR205
        SRGD105      SR205     SR197

{  801} >
{  802} > REPEAT 3 LIST
{  803} > 3 1 1
{  804} > 6 2 2
{  805} > 9 3 3

     /----------------  MEMBER INCIDENCES ----------------/

         MEMBER          INCIDENCES

        SRGD106      SR194     SR202
        SRGD107      SR202     SR206
        SRGD108      SR206     SR198

        SRGD109      SR195     SR203
        SRGD110      SR203     SR207
        SRGD111      SR207     SR199

        SRGD112      SR196     SR204
        SRGD113      SR204     SR208
        SRGD114      SR208     SR200

{  806} >
{  807} > $=========================RIGID MEMBERS TO CONNECT TOP PLATE================================
{  808} > MEMBER INCIDENCES
{  809} > GENERATE 14 MEMBERS LIST
{  810} > 'PRGD1'   'S1'  'SR1'
{  811} > 'PRGD2'   'S2'  'SR2'
{  812} > 'PRGD3'   'S3'  'SR3'
{  813} > 'PRGD4'   'S4'  'SR4'
{  814} > 'PRGD5'   'S5'  'SR5'
{  815} > 'PRGD6'   'S6'  'SR6'
{  816} > 'PRGD7'   'S7'  'SR7'
{  817} > 'PRGD8'   'S8'  'SR8'
{  818} > 'PRGD9'   'S9'  'SR9'
{  819} > 'PRGD10'  'S10' 'SR10'
{  820} > 'PRGD11'  'S11' 'SR11'
{  821} > 'PRGD12'  'S12' 'SR12'
{  822} > 'PRGD13'  'S13' 'SR13'
{  823} > 'PRGD14'  'S14' 'SR14'

     /----------------  MEMBER INCIDENCES ----------------/

         MEMBER          INCIDENCES

        PRGD1        S1        SR1
        PRGD2        S2        SR2
        PRGD3        S3        SR3
        PRGD4        S4        SR4
        PRGD5        S5        SR5
        PRGD6        S6        SR6
        PRGD7        S7        SR7
        PRGD8        S8        SR8
        PRGD9        S9        SR9
        PRGD10       S10       SR10
        PRGD11       S11       SR11
        PRGD12       S12       SR12
        PRGD13       S13       SR13
        PRGD14       S14       SR14

{  824} >
{  825} > REPEAT 1 LIST
{  826} >  14   14   14

     /----------------  MEMBER INCIDENCES ----------------/

         MEMBER          INCIDENCES

        PRGD15       S15       SR15
        PRGD16       S16       SR16
        PRGD17       S17       SR17
        PRGD18       S18       SR18
        PRGD19       S19       SR19
        PRGD20       S20       SR20
        PRGD21       S21       SR21
        PRGD22       S22       SR22
        PRGD23       S23       SR23
        PRGD24       S24       SR24
        PRGD25       S25       SR25
        PRGD26       S26       SR26
```

```
        PRGD27       S27       SR27
        PRGD28       S28       SR28

{  827} >
{  828} > GENERATE 18 MEMBERS LIST
{  829} > 'PRGD29'  'S29'  'SR29'
{  830} > 'PRGD30'  'S30'  'SR30'
{  831} > 'PRGD31'  'S31'  'SR31'
{  832} > 'PRGD32'  'S32'  'SR32'
{  833} > 'PRGD33'  'S33'  'SR33'
{  834} > 'PRGD34'  'S34'  'SR34'
{  835} > 'PRGD35'  'S35'  'SR35'
{  836} > 'PRGD36'  'S36'  'SR36'
{  837} > 'PRGD37'  'S37'  'SR37'
{  838} > 'PRGD38'  'S38'  'SR38'
{  839} > 'PRGD39'  'S39'  'SR39'
{  840} > 'PRGD40'  'S40'  'SR40'
{  841} > 'PRGD41'  'S41'  'SR41'
{  842} > 'PRGD42'  'S42'  'SR42'
{  843} > 'PRGD43'  'S43'  'SR43'
{  844} > 'PRGD44'  'S44'  'SR44'
{  845} > 'PRGD45'  'S45'  'SR45'
{  846} > 'PRGD46'  'S46'  'SR46'

     /----------------  MEMBER INCIDENCES -----------------/

         MEMBER          INCIDENCES

        PRGD29       S29       SR29
        PRGD30       S30       SR30
        PRGD31       S31       SR31
        PRGD32       S32       SR32
        PRGD33       S33       SR33
        PRGD34       S34       SR34
        PRGD35       S35       SR35
        PRGD36       S36       SR36
        PRGD37       S37       SR37
        PRGD38       S38       SR38
        PRGD39       S39       SR39
        PRGD40       S40       SR40
        PRGD41       S41       SR41
        PRGD42       S42       SR42
        PRGD43       S43       SR43
        PRGD44       S44       SR44
        PRGD45       S45       SR45
        PRGD46       S46       SR46

{  847} >
{  848} > REPEAT 1 LIST
{  849} >  18   18   18

     /----------------  MEMBER INCIDENCES -----------------/

         MEMBER          INCIDENCES

        PRGD47       S47       SR47
        PRGD48       S48       SR48
        PRGD49       S49       SR49
        PRGD50       S50       SR50
        PRGD51       S51       SR51
        PRGD52       S52       SR52
        PRGD53       S53       SR53
        PRGD54       S54       SR54
        PRGD55       S55       SR55
        PRGD56       S56       SR56
        PRGD57       S57       SR57
        PRGD58       S58       SR58
        PRGD59       S59       SR59
        PRGD60       S60       SR60
        PRGD61       S61       SR61
        PRGD62       S62       SR62
        PRGD63       S63       SR63
        PRGD64       S64       SR64

{  850} >
{  851} > GENERATE 14 MEMBERS LIST
{  852} > 'PRGD65'  'S65'  'SR65'
{  853} > 'PRGD66'  'S66'  'SR66'
{  854} > 'PRGD67'  'S67'  'SR67'
{  855} > 'PRGD68'  'S68'  'SR68'
{  856} > 'PRGD69'  'S69'  'SR69'
{  857} > 'PRGD70'  'S70'  'SR70'
{  858} > 'PRGD71'  'S71'  'SR71'
{  859} > 'PRGD72'  'S72'  'SR72'
{  860} > 'PRGD73'  'S73'  'SR73'
{  861} > 'PRGD74'  'S74'  'SR74'
{  862} > 'PRGD75'  'S75'  'SR75'
{  863} > 'PRGD76'  'S76'  'SR76'
{  864} > 'PRGD77'  'S77'  'SR77'
{  865} > 'PRGD78'  'S78'  'SR78'

     /----------------  MEMBER INCIDENCES -----------------/

         MEMBER          INCIDENCES

        PRGD65       S65       SR65
```

```
        PRGD66       S66       SR66
        PRGD67       S67       SR67
        PRGD68       S68       SR68
        PRGD69       S69       SR69
        PRGD70       S70       SR70
        PRGD71       S71       SR71
        PRGD72       S72       SR72
        PRGD73       S73       SR73
        PRGD74       S74       SR74
        PRGD75       S75       SR75
        PRGD76       S76       SR76
        PRGD77       S77       SR77
        PRGD78       S78       SR78

{  866} >
{  867} > REPEAT 1 LIST
{  868} >  14   14   14

     /----------------  MEMBER INCIDENCES -----------------/

         MEMBER          INCIDENCES

        PRGD79       S79       SR79
        PRGD80       S80       SR80
        PRGD81       S81       SR81
        PRGD82       S82       SR82
        PRGD83       S83       SR83
        PRGD84       S84       SR84
        PRGD85       S85       SR85
        PRGD86       S86       SR86
        PRGD87       S87       SR87
        PRGD88       S88       SR88
        PRGD89       S89       SR89
        PRGD90       S90       SR90
        PRGD91       S91       SR91
        PRGD92       S92       SR92

{  869} >
{  870} > $GENERATE 2 MEMBERS LIST
{  871} > $'PRGD93'  'SR8'  'SR9'
{  872} > $'PRGD94'  'S22'  'SR23'
{  873} >
{  874} > $================================HEX COUPLING MEMBERS================================
{  875} > MEMBER INCIDENCES
{  876} > GENERATE 14 MEMBERS LIST
{  877} > 'HEX1'   'SR1'  'HR1'
{  878} > 'HEX2'   'SR2'  'HR2'
{  879} > 'HEX3'   'SR3'  'HR3'
{  880} > 'HEX4'   'SR4'  'HR4'
{  881} > 'HEX5'   'SR5'  'HR5'
{  882} > 'HEX6'   'SR6'  'HR6'
{  883} > 'HEX7'   'SR7'  'HR7'
{  884} > 'HEX8'   'SR8'  'HR8'
{  885} > 'HEX9'   'SR9'  'HR9'
{  886} > 'HEX10'  'SR10' 'HR10'
{  887} > 'HEX11'  'SR11' 'HR11'
{  888} > 'HEX12'  'SR12' 'HR12'
{  889} > 'HEX13'  'SR13' 'HR13'
{  890} > 'HEX14'  'SR14' 'HR14'

     /----------------  MEMBER INCIDENCES -----------------/

         MEMBER          INCIDENCES

        HEX1         SR1       HR1
        HEX2         SR2       HR2
        HEX3         SR3       HR3
        HEX4         SR4       HR4
        HEX5         SR5       HR5
        HEX6         SR6       HR6
        HEX7         SR7       HR7
        HEX8         SR8       HR8
        HEX9         SR9       HR9
        HEX10        SR10      HR10
        HEX11        SR11      HR11
        HEX12        SR12      HR12
        HEX13        SR13      HR13
        HEX14        SR14      HR14

{  891} >
{  892} > REPEAT 1 LIST
{  893} >  14   14   14

     /----------------  MEMBER INCIDENCES -----------------/

         MEMBER          INCIDENCES

        HEX15        SR15      HR15
        HEX16        SR16      HR16
        HEX17        SR17      HR17
        HEX18        SR18      HR18
        HEX19        SR19      HR19
        HEX20        SR20      HR20
        HEX21        SR21      HR21
        HEX22        SR22      HR22
        HEX23        SR23      HR23
```

```
        HEX24        SR24      HR24
        HEX25        SR25      HR25
        HEX26        SR26      HR26
        HEX27        SR27      HR27
        HEX28        SR28      HR28

{  894} >
{  895} > GENERATE 18 MEMBERS LIST
{  896} > 'HEX29'  'SR29'  'HR29'
{  897} > 'HEX30'  'SR30'  'HR30'
{  898} > 'HEX31'  'SR31'  'HR31'
{  899} > 'HEX32'  'SR32'  'HR32'
{  900} > 'HEX33'  'SR33'  'HR33'
{  901} > 'HEX34'  'SR34'  'HR34'
{  902} > 'HEX35'  'SR35'  'HR35'
{  903} > 'HEX36'  'SR36'  'HR36'
{  904} > 'HEX37'  'SR37'  'HR37'
{  905} > 'HEX38'  'SR38'  'HR38'
{  906} > 'HEX39'  'SR39'  'HR39'
{  907} > 'HEX40'  'SR40'  'HR40'
{  908} > 'HEX41'  'SR41'  'HR41'
{  909} > 'HEX42'  'SR42'  'HR42'
{  910} > 'HEX43'  'SR43'  'HR43'
{  911} > 'HEX44'  'SR44'  'HR44'
{  912} > 'HEX45'  'SR45'  'HR45'
{  913} > 'HEX46'  'SR46'  'HR46'

     /----------------  MEMBER INCIDENCES -----------------/

         MEMBER          INCIDENCES

        HEX29        SR29      HR29
        HEX30        SR30      HR30
        HEX31        SR31      HR31
        HEX32        SR32      HR32
        HEX33        SR33      HR33
        HEX34        SR34      HR34
        HEX35        SR35      HR35
        HEX36        SR36      HR36
        HEX37        SR37      HR37
        HEX38        SR38      HR38
        HEX39        SR39      HR39
        HEX40        SR40      HR40
        HEX41        SR41      HR41
        HEX42        SR42      HR42
        HEX43        SR43      HR43
        HEX44        SR44      HR44
        HEX45        SR45      HR45
        HEX46        SR46      HR46

{  914} >
{  915} > REPEAT 1 LIST
{  916} >  18   18   18

     /----------------  MEMBER INCIDENCES -----------------/

         MEMBER          INCIDENCES

        HEX47        SR47      HR47
        HEX48        SR48      HR48
        HEX49        SR49      HR49
        HEX50        SR50      HR50
        HEX51        SR51      HR51
        HEX52        SR52      HR52
        HEX53        SR53      HR53
        HEX54        SR54      HR54
        HEX55        SR55      HR55
        HEX56        SR56      HR56
        HEX57        SR57      HR57
        HEX58        SR58      HR58
        HEX59        SR59      HR59
        HEX60        SR60      HR60
        HEX61        SR61      HR61
        HEX62        SR62      HR62
        HEX63        SR63      HR63
        HEX64        SR64      HR64

{  917} >
{  918} > GENERATE 14 MEMBERS LIST
{  919} > 'HEX65'  'SR65'  'HR65'
{  920} > 'HEX66'  'SR66'  'HR66'
{  921} > 'HEX67'  'SR67'  'HR67'
{  922} > 'HEX68'  'SR68'  'HR68'
{  923} > 'HEX69'  'SR69'  'HR69'
{  924} > 'HEX70'  'SR70'  'HR70'
{  925} > 'HEX71'  'SR71'  'HR71'
{  926} > 'HEX72'  'SR72'  'HR72'
{  927} > 'HEX73'  'SR73'  'HR73'
{  928} > 'HEX74'  'SR74'  'HR74'
{  929} > 'HEX75'  'SR75'  'HR75'
{  930} > 'HEX76'  'SR76'  'HR76'
{  931} > 'HEX77'  'SR77'  'HR77'
{  932} > 'HEX78'  'SR78'  'HR78'

     /----------------  MEMBER INCIDENCES -----------------/
```

```
         MEMBER          INCIDENCES

        HEX65        SR65      HR65
        HEX66        SR66      HR66
        HEX67        SR67      HR67
        HEX68        SR68      HR68
        HEX69        SR69      HR69
        HEX70        SR70      HR70
        HEX71        SR71      HR71
        HEX72        SR72      HR72
        HEX73        SR73      HR73
        HEX74        SR74      HR74
        HEX75        SR75      HR75
        HEX76        SR76      HR76
        HEX77        SR77      HR77
        HEX78        SR78      HR78

{  933} >
{  934} > REPEAT 1 LIST
{  935} >  14   14   14

     /----------------  MEMBER INCIDENCES -----------------/

         MEMBER          INCIDENCES

        HEX79        SR79      HR79
        HEX80        SR80      HR80
        HEX81        SR81      HR81
        HEX82        SR82      HR82
        HEX83        SR83      HR83
        HEX84        SR84      HR84
        HEX85        SR85      HR85
        HEX86        SR86      HR86
        HEX87        SR87      HR87
        HEX88        SR88      HR88
        HEX89        SR89      HR89
        HEX90        SR90      HR90
        HEX91        SR91      HR91
        HEX92        SR92      HR92

{  936} >
{  937} > $==============RIGID MEMBERS TO CONNECT HEX COUPLING TO STRAINER============================
{  938} > MEMBER INCIDENCES
{  939} > GENERATE 4 MEMBERS LIST
{  940} > 'RGSA1'  'SA1'   'HR1'
{  941} > 'RGSA2'  'SA1'   'HR2'
{  942} > 'RGSA3'  'SA1'   'HR15'
{  943} > 'RGSA4'  'SA1'   'HR16'

     /----------------  MEMBER INCIDENCES -----------------/

         MEMBER          INCIDENCES

        RGSA1        SA1       HR1
        RGSA2        SA1       HR2
        RGSA3        SA1       HR15
        RGSA4        SA1       HR16

{  944} >
{  945} > REPEAT 2 LIST
{  946} >  4    1    2
{  947} >  8    2    4

     /----------------  MEMBER INCIDENCES -----------------/

         MEMBER          INCIDENCES

        RGSA5        SA2       HR3
        RGSA6        SA2       HR4
        RGSA7        SA2       HR17
        RGSA8        SA2       HR18

        RGSA9        SA3       HR5
        RGSA10       SA3       HR6
        RGSA11       SA3       HR19
        RGSA12       SA3       HR20

{  948} >
{  949} > GENERATE 4 MEMBERS LIST
{  950} > 'RGSA13'  'SA4'   'HR7'
{  951} > 'RGSA14'  'SA4'   'HR8'
{  952} > 'RGSA15'  'SA4'   'HR21'
{  953} > 'RGSA16'  'SA4'   'HR22'

     /----------------  MEMBER INCIDENCES -----------------/

         MEMBER          INCIDENCES

        RGSA13       SA4       HR7
        RGSA14       SA4       HR8
        RGSA15       SA4       HR21
        RGSA16       SA4       HR22

{  954} >
{  955} > GENERATE 4 MEMBERS LIST
{  956} > 'RGSA17'  'SA5'   'HR9'
```

```
{  957} > 'RGSA18'  'SA5'   'HR10'
{  958} > 'RGSA19'  'SA5'   'HR23'
{  959} > 'RGSA20'  'SA5'   'HR24'

     /----------------  MEMBER INCIDENCES -----------------/

         MEMBER          INCIDENCES

        RGSA17       SA5       HR9
        RGSA18       SA5       HR10
        RGSA19       SA5       HR23
        RGSA20       SA5       HR24

{  960} >
{  961} > REPEAT 2 LIST
{  962} >  4    1    2
{  963} >  8    2    4

     /----------------  MEMBER INCIDENCES -----------------/

         MEMBER          INCIDENCES

        RGSA21       SA6       HR11
        RGSA22       SA6       HR12
        RGSA23       SA6       HR25
        RGSA24       SA6       HR26

        RGSA25       SA7       HR13
        RGSA26       SA7       HR14
        RGSA27       SA7       HR27
        RGSA28       SA7       HR28

{  964} >
{  965} > MEMBER INCIDENCES
{  966} > GENERATE 4 MEMBERS LIST
{  967} > 'RGSB1'  'SB1'   'HR29'
{  968} > 'RGSB2'  'SB1'   'HR30'
{  969} > 'RGSB3'  'SB1'   'HR47'
{  970} > 'RGSB4'  'SB1'   'HR48'

     /----------------  MEMBER INCIDENCES -----------------/

         MEMBER          INCIDENCES

        RGSB1        SB1       HR29
        RGSB2        SB1       HR30
        RGSB3        SB1       HR47
        RGSB4        SB1       HR48

{  971} >
{  972} > REPEAT 8 LIST
{  973} >  4    1    2
{  974} >  8    2    4
{  975} > 12    3    6
{  976} > 16    4    8
{  977} > 20    5   10
{  978} > 24    6   12
{  979} > 28    7   14
{  980} > 32    8   16

     /----------------  MEMBER INCIDENCES -----------------/

         MEMBER          INCIDENCES

        RGSB5        SB2       HR31
        RGSB6        SB2       HR32
        RGSB7        SB2       HR49
        RGSB8        SB2       HR50

        RGSB9        SB3       HR33
        RGSB10       SB3       HR34
        RGSB11       SB3       HR51
        RGSB12       SB3       HR52

        RGSB13       SB4       HR35
        RGSB14       SB4       HR36
        RGSB15       SB4       HR53
        RGSB16       SB4       HR54

        RGSB17       SB5       HR37
        RGSB18       SB5       HR38
        RGSB19       SB5       HR55
        RGSB20       SB5       HR56

        RGSB21       SB6       HR39
        RGSB22       SB6       HR40
        RGSB23       SB6       HR57
        RGSB24       SB6       HR58

        RGSB25       SB7       HR41
        RGSB26       SB7       HR42
        RGSB27       SB7       HR59
        RGSB28       SB7       HR60

        RGSB29       SB8       HR43
        RGSB30       SB8       HR44
```

```
        RGSB31       SB8       HR61
        RGSB32       SB8       HR62

        RGSB33       SB9       HR45
        RGSB34       SB9       HR46
        RGSB35       SB9       HR63
        RGSB36       SB9       HR64

{  981} >
{  982} > GENERATE 4 MEMBERS LIST
{  983} > 'RGSC1'  'SC1'   'HR65'
{  984} > 'RGSC2'  'SC1'   'HR66'
{  985} > 'RGSC3'  'SC1'   'HR79'
{  986} > 'RGSC4'  'SC1'   'HR80'

     /----------------  MEMBER INCIDENCES ----------------/

         MEMBER          INCIDENCES

        RGSC1        SC1       HR65
        RGSC2        SC1       HR66
        RGSC3        SC1       HR79
        RGSC4        SC1       HR80

{  987} >
{  988} > REPEAT 6 LIST
{  989} >  4    1    2
{  990} >  8    2    4
{  991} > 12    3    6
{  992} > 16    4    8
{  993} > 20    5   10
{  994} > 24    6   12

     /----------------  MEMBER INCIDENCES ----------------/

         MEMBER          INCIDENCES

        RGSC5        SC2       HR67
        RGSC6        SC2       HR68
        RGSC7        SC2       HR81
        RGSC8        SC2       HR82

        RGSC9        SC3       HR69
        RGSC10       SC3       HR70
        RGSC11       SC3       HR83
        RGSC12       SC3       HR84

        RGSC13       SC4       HR71
        RGSC14       SC4       HR72
        RGSC15       SC4       HR85
        RGSC16       SC4       HR86

        RGSC17       SC5       HR73
        RGSC18       SC5       HR74
        RGSC19       SC5       HR87
        RGSC20       SC5       HR88

        RGSC21       SC6       HR75
        RGSC22       SC6       HR76
        RGSC23       SC6       HR89
        RGSC24       SC6       HR90

        RGSC25       SC7       HR77
        RGSC26       SC7       HR78
        RGSC27       SC7       HR91
        RGSC28       SC7       HR92

{  995} >
{  996} > $==============RIGID MEMBERS FOR STRAINER STICK MODEL========================
{  997} > MEMBER INCIDENCES
{  998} > GENERATE 1 MEMBER LIST
{  999} > 'AA1'  'SA1'  'AA1'

     /----------------  MEMBER INCIDENCES ----------------/

         MEMBER          INCIDENCES

        AA1          SA1       AA1

{ 1000} > GENERATE 1 MEMBER LIST
{ 1001} > 'AA2'  'AA1'  'AA2'

     /----------------  MEMBER INCIDENCES ----------------/

         MEMBER          INCIDENCES

        AA2          AA1       AA2

{ 1002} > REPEAT 3 LIST
{ 1003} > 1  1  1
{ 1004} > 2  2  2
{ 1005} > 3  3  3

     /----------------  MEMBER INCIDENCES ----------------/

         MEMBER          INCIDENCES
```

```
        AA3          AA2       AA3

        AA4          AA3       AA4

        AA5          AA4       AA5

{ 1006} > GENERATE 4 MEMBERS LIST
{ 1007} > 'AA11'  'AA1'  'AA101'
{ 1008} > 'AA12'  'AA1'  'AA102'
{ 1009} > 'AA13'  'AA1'  'AA103'
{ 1010} > 'AA14'  'AA1'  'AA104'

     /----------------  MEMBER INCIDENCES ----------------/

         MEMBER          INCIDENCES

        AA11         AA1       AA101
        AA12         AA1       AA102
        AA13         AA1       AA103
        AA14         AA1       AA104

{ 1011} > REPEAT 4 LIST
{ 1012} > 10  1   100
{ 1013} > 20  2   200
{ 1014} > 30  3   300
{ 1015} > 40  4   400

     /----------------  MEMBER INCIDENCES ----------------/

         MEMBER          INCIDENCES

        AA21         AA2       AA201
        AA22         AA2       AA202
        AA23         AA2       AA203
        AA24         AA2       AA204

        AA31         AA3       AA301
        AA32         AA3       AA302
        AA33         AA3       AA303
        AA34         AA3       AA304

        AA41         AA4       AA401
        AA42         AA4       AA402
        AA43         AA4       AA403
        AA44         AA4       AA404

        AA51         AA5       AA501
        AA52         AA5       AA502
        AA53         AA5       AA503
        AA54         AA5       AA504

{ 1016} >
{ 1017} > GENERATE 1 MEMBER LIST
{ 1018} > 'AB1'  'SA2'  'AB1'

     /----------------  MEMBER INCIDENCES ----------------/

         MEMBER          INCIDENCES

        AB1          SA2       AB1

{ 1019} > GENERATE 1 MEMBER LIST
{ 1020} > 'AB2'  'AB1'  'AB2'

     /----------------  MEMBER INCIDENCES ----------------/

         MEMBER          INCIDENCES

        AB2          AB1       AB2

{ 1021} > REPEAT 3 LIST
{ 1022} > 1  1  1
{ 1023} > 2  2  2
{ 1024} > 3  3  3

     /----------------  MEMBER INCIDENCES ----------------/

         MEMBER          INCIDENCES

        AB3          AB2       AB3

        AB4          AB3       AB4

        AB5          AB4       AB5

{ 1025} > GENERATE 4 MEMBERS LIST
{ 1026} > 'AB11'  'AB1'  'AB101'
{ 1027} > 'AB12'  'AB1'  'AB102'
{ 1028} > 'AB13'  'AB1'  'AB103'
{ 1029} > 'AB14'  'AB1'  'AB104'

     /----------------  MEMBER INCIDENCES ----------------/

         MEMBER          INCIDENCES
```

```
        AB11         AB1       AB101
        AB12         AB1       AB102
        AB13         AB1       AB103
        AB14         AB1       AB104

{ 1030} > REPEAT 4 LIST
{ 1031} > 10  1   100
{ 1032} > 20  2   200
{ 1033} > 30  3   300
{ 1034} > 40  4   400

     /----------------  MEMBER INCIDENCES ----------------/

         MEMBER          INCIDENCES

        AB21         AB2       AB201
        AB22         AB2       AB202
        AB23         AB2       AB203
        AB24         AB2       AB204

        AB31         AB3       AB301
        AB32         AB3       AB302
        AB33         AB3       AB303
        AB34         AB3       AB304

        AB41         AB4       AB401
        AB42         AB4       AB402
        AB43         AB4       AB403
        AB44         AB4       AB404

        AB51         AB5       AB501
        AB52         AB5       AB502
        AB53         AB5       AB503
        AB54         AB5       AB504

{ 1035} >
{ 1036} > GENERATE 1 MEMBER LIST
{ 1037} > 'AC1'  'SA3'  'AC1'

     /----------------  MEMBER INCIDENCES ----------------/

         MEMBER          INCIDENCES

        AC1          SA3       AC1

{ 1038} > GENERATE 1 MEMBER LIST
{ 1039} > 'AC2'  'AC1'  'AC2'

     /----------------  MEMBER INCIDENCES ----------------/

         MEMBER          INCIDENCES

        AC2          AC1       AC2

{ 1040} > REPEAT 3 LIST
{ 1041} > 1  1  1
{ 1042} > 2  2  2
{ 1043} > 3  3  3

     /----------------  MEMBER INCIDENCES ----------------/

         MEMBER          INCIDENCES

        AC3          AC2       AC3

        AC4          AC3       AC4

        AC5          AC4       AC5

{ 1044} > GENERATE 4 MEMBERS LIST
{ 1045} > 'AC11'  'AC1'  'AC101'
{ 1046} > 'AC12'  'AC1'  'AC102'
{ 1047} > 'AC13'  'AC1'  'AC103'
{ 1048} > 'AC14'  'AC1'  'AC104'

     /----------------  MEMBER INCIDENCES ----------------/

         MEMBER          INCIDENCES

        AC11         AC1       AC101
        AC12         AC1       AC102
        AC13         AC1       AC103
        AC14         AC1       AC104

{ 1049} > REPEAT 4 LIST
{ 1050} > 10  1   100
{ 1051} > 20  2   200
{ 1052} > 30  3   300
{ 1053} > 40  4   400

     /----------------  MEMBER INCIDENCES ----------------/

         MEMBER          INCIDENCES

        AC21         AC2       AC201
        AC22         AC2       AC202
```

```
        AC23         AC2       AC203
        AC24         AC2       AC204

        AC31         AC3       AC301
        AC32         AC3       AC302
        AC33         AC3       AC303
        AC34         AC3       AC304

        AC41         AC4       AC401
        AC42         AC4       AC402
        AC43         AC4       AC403
        AC44         AC4       AC404

        AC51         AC5       AC501
        AC52         AC5       AC502
        AC53         AC5       AC503
        AC54         AC5       AC504

{ 1054} >
{ 1055} > GENERATE 1 MEMBER LIST
{ 1056} > 'AE1'  'SA4'  'AE1'

     /----------------  MEMBER INCIDENCES -----------------/

         MEMBER          INCIDENCES

        AE1          SA4       AE1

{ 1057} > GENERATE 1 MEMBER LIST
{ 1058} > 'AE2'  'AE1'  'AE2'

     /----------------  MEMBER INCIDENCES -----------------/

         MEMBER          INCIDENCES

        AE2          AE1       AE2

{ 1059} > REPEAT 3 LIST
{ 1060} > 1  1  1
{ 1061} > 2  2  2
{ 1062} > 3  3  3

     /----------------  MEMBER INCIDENCES -----------------/

         MEMBER          INCIDENCES

        AE3          AE2       AE3

        AE4          AE3       AE4

        AE5          AE4       AE5

{ 1063} > GENERATE 4 MEMBERS LIST
{ 1064} > 'AE11'  'AE1'  'AE101'
{ 1065} > 'AE12'  'AE1'  'AE102'
{ 1066} > 'AE13'  'AE1'  'AE103'
{ 1067} > 'AE14'  'AE1'  'AE104'

     /----------------  MEMBER INCIDENCES -----------------/

         MEMBER          INCIDENCES

        AE11         AE1       AE101
        AE12         AE1       AE102
        AE13         AE1       AE103
        AE14         AE1       AE104

{ 1068} > REPEAT 4 LIST
{ 1069} > 10  1   100
{ 1070} > 20  2   200
{ 1071} > 30  3   300
{ 1072} > 40  4   400

     /----------------  MEMBER INCIDENCES -----------------/

         MEMBER          INCIDENCES

        AE21         AE2       AE201
        AE22         AE2       AE202
        AE23         AE2       AE203
        AE24         AE2       AE204

        AE31         AE3       AE301
        AE32         AE3       AE302
        AE33         AE3       AE303
        AE34         AE3       AE304

        AE41         AE4       AE401
        AE42         AE4       AE402
        AE43         AE4       AE403
        AE44         AE4       AE404

        AE51         AE5       AE501
        AE52         AE5       AE502
        AE53         AE5       AE503
        AE54         AE5       AE504
```

```
{ 1073} >
{ 1074} > GENERATE 1 MEMBER LIST
{ 1075} > 'AG1'  'SA5'  'AG1'

     /----------------  MEMBER INCIDENCES ----------------/

         MEMBER          INCIDENCES

        AG1          SA5       AG1

{ 1076} > GENERATE 1 MEMBER LIST
{ 1077} > 'AG2'  'AG1'  'AG2'

     /----------------  MEMBER INCIDENCES ----------------/

         MEMBER          INCIDENCES

        AG2          AG1       AG2

{ 1078} > REPEAT 3 LIST
{ 1079} > 1  1  1
{ 1080} > 2  2  2
{ 1081} > 3  3  3

     /----------------  MEMBER INCIDENCES ----------------/

         MEMBER          INCIDENCES

        AG3          AG2       AG3

        AG4          AG3       AG4

        AG5          AG4       AG5

{ 1082} > GENERATE 4 MEMBERS LIST
{ 1083} > 'AG11'  'AG1'  'AG101'
{ 1084} > 'AG12'  'AG1'  'AG102'
{ 1085} > 'AG13'  'AG1'  'AG103'
{ 1086} > 'AG14'  'AG1'  'AG104'

     /----------------  MEMBER INCIDENCES ----------------/

         MEMBER          INCIDENCES

        AG11         AG1       AG101
        AG12         AG1       AG102
        AG13         AG1       AG103
        AG14         AG1       AG104

{ 1087} > REPEAT 4 LIST
{ 1088} > 10  1   100
{ 1089} > 20  2   200
{ 1090} > 30  3   300
{ 1091} > 40  4   400

     /----------------  MEMBER INCIDENCES ----------------/

         MEMBER          INCIDENCES

        AG21         AG2       AG201
        AG22         AG2       AG202
        AG23         AG2       AG203
        AG24         AG2       AG204

        AG31         AG3       AG301
        AG32         AG3       AG302
        AG33         AG3       AG303
        AG34         AG3       AG304

        AG41         AG4       AG401
        AG42         AG4       AG402
        AG43         AG4       AG403
        AG44         AG4       AG404

        AG51         AG5       AG501
        AG52         AG5       AG502
        AG53         AG5       AG503
        AG54         AG5       AG504

{ 1092} >
{ 1093} > GENERATE 1 MEMBER LIST
{ 1094} > 'AH1'  'SA6'  'AH1'

     /----------------  MEMBER INCIDENCES ----------------/

         MEMBER          INCIDENCES

        AH1          SA6       AH1

{ 1095} > GENERATE 1 MEMBER LIST
{ 1096} > 'AH2'  'AH1'  'AH2'

     /----------------  MEMBER INCIDENCES ----------------/

         MEMBER          INCIDENCES
```

```
        AH2          AH1       AH2

{ 1097} > REPEAT 3 LIST
{ 1098} > 1  1  1
{ 1099} > 2  2  2
{ 1100} > 3  3  3

     /----------------  MEMBER INCIDENCES ----------------/

         MEMBER          INCIDENCES

        AH3          AH2       AH3

        AH4          AH3       AH4

        AH5          AH4       AH5

{ 1101} > GENERATE 4 MEMBERS LIST
{ 1102} > 'AH11'  'AH1'  'AH101'
{ 1103} > 'AH12'  'AH1'  'AH102'
{ 1104} > 'AH13'  'AH1'  'AH103'
{ 1105} > 'AH14'  'AH1'  'AH104'

     /----------------  MEMBER INCIDENCES ----------------/

         MEMBER          INCIDENCES

        AH11         AH1       AH101
        AH12         AH1       AH102
        AH13         AH1       AH103
        AH14         AH1       AH104

{ 1106} > REPEAT 4 LIST
{ 1107} > 10  1   100
{ 1108} > 20  2   200
{ 1109} > 30  3   300
{ 1110} > 40  4   400

     /----------------  MEMBER INCIDENCES ----------------/

         MEMBER          INCIDENCES

        AH21         AH2       AH201
        AH22         AH2       AH202
        AH23         AH2       AH203
        AH24         AH2       AH204

        AH31         AH3       AH301
        AH32         AH3       AH302
        AH33         AH3       AH303
        AH34         AH3       AH304

        AH41         AH4       AH401
        AH42         AH4       AH402
        AH43         AH4       AH403
        AH44         AH4       AH404

        AH51         AH5       AH501
        AH52         AH5       AH502
        AH53         AH5       AH503
        AH54         AH5       AH504

{ 1111} >
{ 1112} > GENERATE 1 MEMBER LIST
{ 1113} > 'AJ1'  'SA7'  'AJ1'

     /----------------  MEMBER INCIDENCES ----------------/

         MEMBER          INCIDENCES

        AJ1          SA7       AJ1

{ 1114} > GENERATE 1 MEMBER LIST
{ 1115} > 'AJ2'  'AJ1'  'AJ2'

     /----------------  MEMBER INCIDENCES ----------------/

         MEMBER          INCIDENCES

        AJ2          AJ1       AJ2

{ 1116} > REPEAT 3 LIST
{ 1117} > 1  1  1
{ 1118} > 2  2  2
{ 1119} > 3  3  3

     /----------------  MEMBER INCIDENCES ----------------/

         MEMBER          INCIDENCES

        AJ3          AJ2       AJ3

        AJ4          AJ3       AJ4

        AJ5          AJ4       AJ5
```

```
{ 1120} > GENERATE 4 MEMBERS LIST
{ 1121} > 'AJ11'  'AJ1'  'AJ101'
{ 1122} > 'AJ12'  'AJ1'  'AJ102'
{ 1123} > 'AJ13'  'AJ1'  'AJ103'
{ 1124} > 'AJ14'  'AJ1'  'AJ104'

     /----------------  MEMBER INCIDENCES -----------------/

         MEMBER          INCIDENCES

        AJ11         AJ1       AJ101
        AJ12         AJ1       AJ102
        AJ13         AJ1       AJ103
        AJ14         AJ1       AJ104

{ 1125} > REPEAT 4 LIST
{ 1126} > 10  1   100
{ 1127} > 20  2   200
{ 1128} > 30  3   300
{ 1129} > 40  4   400

     /----------------  MEMBER INCIDENCES -----------------/

         MEMBER          INCIDENCES

        AJ21         AJ2       AJ201
        AJ22         AJ2       AJ202
        AJ23         AJ2       AJ203
        AJ24         AJ2       AJ204

        AJ31         AJ3       AJ301
        AJ32         AJ3       AJ302
        AJ33         AJ3       AJ303
        AJ34         AJ3       AJ304

        AJ41         AJ4       AJ401
        AJ42         AJ4       AJ402
        AJ43         AJ4       AJ403
        AJ44         AJ4       AJ404

        AJ51         AJ5       AJ501
        AJ52         AJ5       AJ502
        AJ53         AJ5       AJ503
        AJ54         AJ5       AJ504

{ 1130} >
{ 1131} > GENERATE 1 MEMBER LIST
{ 1132} > 'BA1'  'SB1'  'BA1'

     /----------------  MEMBER INCIDENCES -----------------/

         MEMBER          INCIDENCES

        BA1          SB1       BA1

{ 1133} > GENERATE 1 MEMBER LIST
{ 1134} > 'BA2'  'BA1'  'BA2'

     /----------------  MEMBER INCIDENCES -----------------/

         MEMBER          INCIDENCES

        BA2          BA1       BA2

{ 1135} > REPEAT 3 LIST
{ 1136} > 1  1  1
{ 1137} > 2  2  2
{ 1138} > 3  3  3

     /----------------  MEMBER INCIDENCES -----------------/

         MEMBER          INCIDENCES

        BA3          BA2       BA3

        BA4          BA3       BA4

        BA5          BA4       BA5

{ 1139} > GENERATE 4 MEMBERS LIST
{ 1140} > 'BA11'  'BA1'  'BA101'
{ 1141} > 'BA12'  'BA1'  'BA102'
{ 1142} > 'BA13'  'BA1'  'BA103'
{ 1143} > 'BA14'  'BA1'  'BA104'

     /----------------  MEMBER INCIDENCES -----------------/

         MEMBER          INCIDENCES

        BA11         BA1       BA101
        BA12         BA1       BA102
        BA13         BA1       BA103
        BA14         BA1       BA104

{ 1144} > REPEAT 4 LIST
```

```
{ 1145} > 10  1   100
{ 1146} > 20  2   200
{ 1147} > 30  3   300
{ 1148} > 40  4   400

     /----------------  MEMBER INCIDENCES ----------------/

         MEMBER          INCIDENCES

        BA21         BA2       BA201
        BA22         BA2       BA202
        BA23         BA2       BA203
        BA24         BA2       BA204

        BA31         BA3       BA301
        BA32         BA3       BA302
        BA33         BA3       BA303
        BA34         BA3       BA304

        BA41         BA4       BA401
        BA42         BA4       BA402
        BA43         BA4       BA403
        BA44         BA4       BA404

        BA51         BA5       BA501
        BA52         BA5       BA502
        BA53         BA5       BA503
        BA54         BA5       BA504

{ 1149} >
{ 1150} > GENERATE 1 MEMBER LIST
{ 1151} > 'BB1'  'SB2'  'BB1'

     /----------------  MEMBER INCIDENCES ----------------/

         MEMBER          INCIDENCES

        BB1          SB2       BB1

{ 1152} > GENERATE 1 MEMBER LIST
{ 1153} > 'BB2'  'BB1'  'BB2'

     /----------------  MEMBER INCIDENCES ----------------/

         MEMBER          INCIDENCES

        BB2          BB1       BB2

{ 1154} > REPEAT 3 LIST
{ 1155} > 1  1  1
{ 1156} > 2  2  2
{ 1157} > 3  3  3

     /----------------  MEMBER INCIDENCES ----------------/

         MEMBER          INCIDENCES

        BB3          BB2       BB3

        BB4          BB3       BB4

        BB5          BB4       BB5

{ 1158} > GENERATE 4 MEMBERS LIST
{ 1159} > 'BB11'  'BB1'  'BB101'
{ 1160} > 'BB12'  'BB1'  'BB102'
{ 1161} > 'BB13'  'BB1'  'BB103'
{ 1162} > 'BB14'  'BB1'  'BB104'

     /----------------  MEMBER INCIDENCES ----------------/

         MEMBER          INCIDENCES

        BB11         BB1       BB101
        BB12         BB1       BB102
        BB13         BB1       BB103
        BB14         BB1       BB104

{ 1163} > REPEAT 4 LIST
{ 1164} > 10  1   100
{ 1165} > 20  2   200
{ 1166} > 30  3   300
{ 1167} > 40  4   400

     /----------------  MEMBER INCIDENCES ----------------/

         MEMBER          INCIDENCES

        BB21         BB2       BB201
        BB22         BB2       BB202
        BB23         BB2       BB203
        BB24         BB2       BB204

        BB31         BB3       BB301
        BB32         BB3       BB302
        BB33         BB3       BB303
```

```
        BB34          BB3       BB304

        BB41          BB4       BB401
        BB42          BB4       BB402
        BB43          BB4       BB403
        BB44          BB4       BB404

        BB51          BB5       BB501
        BB52          BB5       BB502
        BB53          BB5       BB503
        BB54          BB5       BB504

{ 1168} >
{ 1169} > GENERATE 1 MEMBER LIST
{ 1170} > 'BC1'  'SB3'  'BC1'

     /----------------  MEMBER INCIDENCES -----------------/

         MEMBER          INCIDENCES

        BC1           SB3       BC1

{ 1171} > GENERATE 1 MEMBER LIST
{ 1172} > 'BC2'  'BC1'  'BC2'

     /----------------  MEMBER INCIDENCES -----------------/

         MEMBER          INCIDENCES

        BC2           BC1       BC2

{ 1173} > REPEAT 3 LIST
{ 1174} > 1  1  1
{ 1175} > 2  2  2
{ 1176} > 3  3  3

     /----------------  MEMBER INCIDENCES -----------------/

         MEMBER          INCIDENCES

        BC3           BC2       BC3

        BC4           BC3       BC4

        BC5           BC4       BC5

{ 1177} > GENERATE 4 MEMBERS LIST
{ 1178} > 'BC11'  'BC1'  'BC101'
{ 1179} > 'BC12'  'BC1'  'BC102'
{ 1180} > 'BC13'  'BC1'  'BC103'
{ 1181} > 'BC14'  'BC1'  'BC104'

     /----------------  MEMBER INCIDENCES -----------------/

         MEMBER          INCIDENCES

        BC11          BC1       BC101
        BC12          BC1       BC102
        BC13          BC1       BC103
        BC14          BC1       BC104

{ 1182} > REPEAT 4 LIST
{ 1183} > 10  1   100
{ 1184} > 20  2   200
{ 1185} > 30  3   300
{ 1186} > 40  4   400

     /----------------  MEMBER INCIDENCES -----------------/

         MEMBER          INCIDENCES

        BC21          BC2       BC201
        BC22          BC2       BC202
        BC23          BC2       BC203
        BC24          BC2       BC204

        BC31          BC3       BC301
        BC32          BC3       BC302
        BC33          BC3       BC303
        BC34          BC3       BC304

        BC41          BC4       BC401
        BC42          BC4       BC402
        BC43          BC4       BC403
        BC44          BC4       BC404

        BC51          BC5       BC501
        BC52          BC5       BC502
        BC53          BC5       BC503
        BC54          BC5       BC504

{ 1187} >
{ 1188} > GENERATE 1 MEMBER LIST
{ 1189} > 'BD1'  'SB4'  'BD1'

     /----------------  MEMBER INCIDENCES -----------------/
```

```
         MEMBER          INCIDENCES

        BD1          SB4       BD1

{ 1190} > GENERATE 1 MEMBER LIST
{ 1191} > 'BD2'  'BD1'  'BD2'

     /----------------  MEMBER INCIDENCES ----------------/

         MEMBER          INCIDENCES

        BD2          BD1       BD2

{ 1192} > REPEAT 3 LIST
{ 1193} > 1  1  1
{ 1194} > 2  2  2
{ 1195} > 3  3  3

     /----------------  MEMBER INCIDENCES ----------------/

         MEMBER          INCIDENCES

        BD3          BD2       BD3

        BD4          BD3       BD4

        BD5          BD4       BD5

{ 1196} > GENERATE 4 MEMBERS LIST
{ 1197} > 'BD11'  'BD1'  'BD101'
{ 1198} > 'BD12'  'BD1'  'BD102'
{ 1199} > 'BD13'  'BD1'  'BD103'
{ 1200} > 'BD14'  'BD1'  'BD104'

     /----------------  MEMBER INCIDENCES ----------------/

         MEMBER          INCIDENCES

        BD11         BD1       BD101
        BD12         BD1       BD102
        BD13         BD1       BD103
        BD14         BD1       BD104

{ 1201} > REPEAT 4 LIST
{ 1202} > 10  1   100
{ 1203} > 20  2   200
{ 1204} > 30  3   300
{ 1205} > 40  4   400

     /----------------  MEMBER INCIDENCES ----------------/

         MEMBER          INCIDENCES

        BD21         BD2       BD201
        BD22         BD2       BD202
        BD23         BD2       BD203
        BD24         BD2       BD204

        BD31         BD3       BD301
        BD32         BD3       BD302
        BD33         BD3       BD303
        BD34         BD3       BD304

        BD41         BD4       BD401
        BD42         BD4       BD402
        BD43         BD4       BD403
        BD44         BD4       BD404

        BD51         BD5       BD501
        BD52         BD5       BD502
        BD53         BD5       BD503
        BD54         BD5       BD504

{ 1206} >
{ 1207} > GENERATE 1 MEMBER LIST
{ 1208} > 'BE1'  'SB5'  'BE1'

     /----------------  MEMBER INCIDENCES ----------------/

         MEMBER          INCIDENCES

        BE1          SB5       BE1

{ 1209} > GENERATE 1 MEMBER LIST
{ 1210} > 'BE2'  'BE1'  'BE2'

     /----------------  MEMBER INCIDENCES ----------------/

         MEMBER          INCIDENCES

        BE2          BE1       BE2

{ 1211} > REPEAT 2 LIST
{ 1212} > 1  1  1
{ 1213} > 2  2  2
```

```
     /----------------  MEMBER INCIDENCES -----------------/

         MEMBER          INCIDENCES

        BE3          BE2       BE3

        BE4          BE3       BE4

{ 1214} > GENERATE 4 MEMBERS LIST
{ 1215} > 'BE11'  'BE1'  'BE101'
{ 1216} > 'BE12'  'BE1'  'BE102'
{ 1217} > 'BE13'  'BE1'  'BE103'
{ 1218} > 'BE14'  'BE1'  'BE104'

     /----------------  MEMBER INCIDENCES -----------------/

         MEMBER          INCIDENCES

        BE11         BE1       BE101
        BE12         BE1       BE102
        BE13         BE1       BE103
        BE14         BE1       BE104

{ 1219} > REPEAT 3 LIST
{ 1220} > 10  1   100
{ 1221} > 20  2   200
{ 1222} > 30  3   300

     /----------------  MEMBER INCIDENCES -----------------/

         MEMBER          INCIDENCES

        BE21         BE2       BE201
        BE22         BE2       BE202
        BE23         BE2       BE203
        BE24         BE2       BE204

        BE31         BE3       BE301
        BE32         BE3       BE302
        BE33         BE3       BE303
        BE34         BE3       BE304

        BE41         BE4       BE401
        BE42         BE4       BE402
        BE43         BE4       BE403
        BE44         BE4       BE404

{ 1223} >
{ 1224} > GENERATE 1 MEMBER LIST
{ 1225} > 'BF1'  'SB6'  'BF1'

     /----------------  MEMBER INCIDENCES -----------------/

         MEMBER          INCIDENCES

        BF1          SB6       BF1

{ 1226} > GENERATE 1 MEMBER LIST
{ 1227} > 'BF2'  'BF1'  'BF2'

     /----------------  MEMBER INCIDENCES -----------------/

         MEMBER          INCIDENCES

        BF2          BF1       BF2

{ 1228} > REPEAT 2 LIST
{ 1229} > 1  1  1
{ 1230} > 2  2  2

     /----------------  MEMBER INCIDENCES -----------------/

         MEMBER          INCIDENCES

        BF3          BF2       BF3

        BF4          BF3       BF4

{ 1231} > GENERATE 4 MEMBERS LIST
{ 1232} > 'BF11'  'BF1'  'BF101'
{ 1233} > 'BF12'  'BF1'  'BF102'
{ 1234} > 'BF13'  'BF1'  'BF103'
{ 1235} > 'BF14'  'BF1'  'BF104'

     /----------------  MEMBER INCIDENCES -----------------/

         MEMBER          INCIDENCES

        BF11         BF1       BF101
        BF12         BF1       BF102
        BF13         BF1       BF103
        BF14         BF1       BF104

{ 1236} > REPEAT 3 LIST
{ 1237} > 10  1   100
```

```
{ 1238} > 20  2   200
{ 1239} > 30  3   300

     /----------------  MEMBER INCIDENCES ----------------/

         MEMBER          INCIDENCES

        BF21         BF2       BF201
        BF22         BF2       BF202
        BF23         BF2       BF203
        BF24         BF2       BF204

        BF31         BF3       BF301
        BF32         BF3       BF302
        BF33         BF3       BF303
        BF34         BF3       BF304

        BF41         BF4       BF401
        BF42         BF4       BF402
        BF43         BF4       BF403
        BF44         BF4       BF404

{ 1240} >
{ 1241} > GENERATE 1 MEMBER LIST
{ 1242} > 'BG1'  'SB7'  'BG1'

     /----------------  MEMBER INCIDENCES ----------------/

         MEMBER          INCIDENCES

        BG1          SB7       BG1

{ 1243} > GENERATE 1 MEMBER LIST
{ 1244} > 'BG2'  'BG1'  'BG2'

     /----------------  MEMBER INCIDENCES ----------------/

         MEMBER          INCIDENCES

        BG2          BG1       BG2

{ 1245} > REPEAT 2 LIST
{ 1246} > 1  1  1
{ 1247} > 2  2  2

     /----------------  MEMBER INCIDENCES ----------------/

         MEMBER          INCIDENCES

        BG3          BG2       BG3

        BG4          BG3       BG4

{ 1248} > GENERATE 4 MEMBERS LIST
{ 1249} > 'BG11'  'BG1'  'BG101'
{ 1250} > 'BG12'  'BG1'  'BG102'
{ 1251} > 'BG13'  'BG1'  'BG103'
{ 1252} > 'BG14'  'BG1'  'BG104'

     /----------------  MEMBER INCIDENCES ----------------/

         MEMBER          INCIDENCES

        BG11         BG1       BG101
        BG12         BG1       BG102
        BG13         BG1       BG103
        BG14         BG1       BG104

{ 1253} > REPEAT 3 LIST
{ 1254} > 10  1   100
{ 1255} > 20  2   200
{ 1256} > 30  3   300

     /----------------  MEMBER INCIDENCES ----------------/

         MEMBER          INCIDENCES

        BG21         BG2       BG201
        BG22         BG2       BG202
        BG23         BG2       BG203
        BG24         BG2       BG204

        BG31         BG3       BG301
        BG32         BG3       BG302
        BG33         BG3       BG303
        BG34         BG3       BG304

        BG41         BG4       BG401
        BG42         BG4       BG402
        BG43         BG4       BG403
        BG44         BG4       BG404

{ 1257} >
{ 1258} > GENERATE 1 MEMBER LIST
{ 1259} > 'BH1'  'SB8'  'BH1'
```

```
     /----------------- MEMBER INCIDENCES -----------------/

         MEMBER          INCIDENCES

        BH1          SB8       BH1

{ 1260} > GENERATE 1 MEMBER LIST
{ 1261} > 'BH2'  'BH1'  'BH2'

     /----------------- MEMBER INCIDENCES -----------------/

         MEMBER          INCIDENCES

        BH2          BH1       BH2

{ 1262} > REPEAT 2 LIST
{ 1263} > 1  1  1
{ 1264} > 2  2  2

     /----------------- MEMBER INCIDENCES -----------------/

         MEMBER          INCIDENCES

        BH3          BH2       BH3

        BH4          BH3       BH4

{ 1265} > GENERATE 4 MEMBERS LIST
{ 1266} > 'BH11'  'BH1'  'BH101'
{ 1267} > 'BH12'  'BH1'  'BH102'
{ 1268} > 'BH13'  'BH1'  'BH103'
{ 1269} > 'BH14'  'BH1'  'BH104'

     /----------------- MEMBER INCIDENCES -----------------/

         MEMBER          INCIDENCES

        BH11         BH1       BH101
        BH12         BH1       BH102
        BH13         BH1       BH103
        BH14         BH1       BH104

{ 1270} > REPEAT 3 LIST
{ 1271} > 10  1   100
{ 1272} > 20  2   200
{ 1273} > 30  3   300

     /----------------- MEMBER INCIDENCES -----------------/

         MEMBER          INCIDENCES

        BH21         BH2       BH201
        BH22         BH2       BH202
        BH23         BH2       BH203
        BH24         BH2       BH204

        BH31         BH3       BH301
        BH32         BH3       BH302
        BH33         BH3       BH303
        BH34         BH3       BH304

        BH41         BH4       BH401
        BH42         BH4       BH402
        BH43         BH4       BH403
        BH44         BH4       BH404

{ 1274} >
{ 1275} > GENERATE 1 MEMBER LIST
{ 1276} > 'BJ1'  'SB9'  'BJ1'

     /----------------- MEMBER INCIDENCES -----------------/

         MEMBER          INCIDENCES

        BJ1          SB9       BJ1

{ 1277} > GENERATE 1 MEMBER LIST
{ 1278} > 'BJ2'  'BJ1'  'BJ2'

     /----------------- MEMBER INCIDENCES -----------------/

         MEMBER          INCIDENCES

        BJ2          BJ1       BJ2

{ 1279} > REPEAT 2 LIST
{ 1280} > 1  1  1
{ 1281} > 2  2  2

     /----------------- MEMBER INCIDENCES -----------------/

         MEMBER          INCIDENCES

        BJ3          BJ2       BJ3

        BJ4          BJ3       BJ4
```

```
{ 1282} > GENERATE 4 MEMBERS LIST
{ 1283} > 'BJ11'  'BJ1'  'BJ101'
{ 1284} > 'BJ12'  'BJ1'  'BJ102'
{ 1285} > 'BJ13'  'BJ1'  'BJ103'
{ 1286} > 'BJ14'  'BJ1'  'BJ104'

     /----------------  MEMBER INCIDENCES -----------------/

         MEMBER          INCIDENCES

        BJ11         BJ1       BJ101
        BJ12         BJ1       BJ102
        BJ13         BJ1       BJ103
        BJ14         BJ1       BJ104

{ 1287} > REPEAT 3 LIST
{ 1288} > 10  1   100
{ 1289} > 20  2   200
{ 1290} > 30  3   300

     /----------------  MEMBER INCIDENCES -----------------/

         MEMBER          INCIDENCES

        BJ21         BJ2       BJ201
        BJ22         BJ2       BJ202
        BJ23         BJ2       BJ203
        BJ24         BJ2       BJ204

        BJ31         BJ3       BJ301
        BJ32         BJ3       BJ302
        BJ33         BJ3       BJ303
        BJ34         BJ3       BJ304

        BJ41         BJ4       BJ401
        BJ42         BJ4       BJ402
        BJ43         BJ4       BJ403
        BJ44         BJ4       BJ404

{ 1291} >
{ 1292} > GENERATE 1 MEMBER LIST
{ 1293} > 'CB1'  'SC1'  'CB1'

     /----------------  MEMBER INCIDENCES -----------------/

         MEMBER          INCIDENCES

        CB1          SC1       CB1

{ 1294} > GENERATE 1 MEMBER LIST
{ 1295} > 'CB2'  'CB1'  'CB2'

     /----------------  MEMBER INCIDENCES -----------------/

         MEMBER          INCIDENCES

        CB2          CB1       CB2

{ 1296} > REPEAT 3 LIST
{ 1297} > 1  1  1
{ 1298} > 2  2  2
{ 1299} > 3  3  3

     /----------------  MEMBER INCIDENCES -----------------/

         MEMBER          INCIDENCES

        CB3          CB2       CB3

        CB4          CB3       CB4

        CB5          CB4       CB5

{ 1300} > GENERATE 4 MEMBERS LIST
{ 1301} > 'CB11'  'CB1'  'CB101'
{ 1302} > 'CB12'  'CB1'  'CB102'
{ 1303} > 'CB13'  'CB1'  'CB103'
{ 1304} > 'CB14'  'CB1'  'CB104'

     /----------------  MEMBER INCIDENCES -----------------/

         MEMBER          INCIDENCES

        CB11         CB1       CB101
        CB12         CB1       CB102
        CB13         CB1       CB103
        CB14         CB1       CB104

{ 1305} > REPEAT 4 LIST
{ 1306} > 10  1   100
{ 1307} > 20  2   200
{ 1308} > 30  3   300
{ 1309} > 40  4   400

     /----------------  MEMBER INCIDENCES -----------------/
```

```
         MEMBER          INCIDENCES

        CB21         CB2       CB201
        CB22         CB2       CB202
        CB23         CB2       CB203
        CB24         CB2       CB204

        CB31         CB3       CB301
        CB32         CB3       CB302
        CB33         CB3       CB303
        CB34         CB3       CB304

        CB41         CB4       CB401
        CB42         CB4       CB402
        CB43         CB4       CB403
        CB44         CB4       CB404

        CB51         CB5       CB501
        CB52         CB5       CB502
        CB53         CB5       CB503
        CB54         CB5       CB504

{ 1310} >
{ 1311} > GENERATE 1 MEMBER LIST
{ 1312} > 'CC1'  'SC2'  'CC1'

    /----------------  MEMBER INCIDENCES ----------------/

         MEMBER          INCIDENCES

        CC1          SC2       CC1

{ 1313} > GENERATE 1 MEMBER LIST
{ 1314} > 'CC2'  'CC1'  'CC2'

     /----------------  MEMBER INCIDENCES ----------------/

         MEMBER          INCIDENCES

        CC2          CC1       CC2

{ 1315} > REPEAT 3 LIST
{ 1316} > 1  1  1
{ 1317} > 2  2  2
{ 1318} > 3  3  3

     /----------------  MEMBER INCIDENCES ----------------/

         MEMBER          INCIDENCES

        CC3          CC2       CC3

        CC4          CC3       CC4

        CC5          CC4       CC5

{ 1319} > GENERATE 4 MEMBERS LIST
{ 1320} > 'CC11'  'CC1'  'CC101'
{ 1321} > 'CC12'  'CC1'  'CC102'
{ 1322} > 'CC13'  'CC1'  'CC103'
{ 1323} > 'CC14'  'CC1'  'CC104'

     /----------------  MEMBER INCIDENCES ----------------/

         MEMBER          INCIDENCES

        CC11         CC1       CC101
        CC12         CC1       CC102
        CC13         CC1       CC103
        CC14         CC1       CC104

{ 1324} > REPEAT 4 LIST
{ 1325} > 10  1   100
{ 1326} > 20  2   200
{ 1327} > 30  3   300
{ 1328} > 40  4   400

     /----------------  MEMBER INCIDENCES ----------------/

         MEMBER          INCIDENCES

        CC21         CC2       CC201
        CC22         CC2       CC202
        CC23         CC2       CC203
        CC24         CC2       CC204

        CC31         CC3       CC301
        CC32         CC3       CC302
        CC33         CC3       CC303
        CC34         CC3       CC304

        CC41         CC4       CC401
        CC42         CC4       CC402
        CC43         CC4       CC403
        CC44         CC4       CC404
```

```
        CC51         CC5       CC501
        CC52         CC5       CC502
        CC53         CC5       CC503
        CC54         CC5       CC504

{ 1329} >
{ 1330} > GENERATE 1 MEMBER LIST
{ 1331} > 'CD1'  'SC3'  'CD1'

     /----------------  MEMBER INCIDENCES ----------------/

         MEMBER          INCIDENCES

        CD1          SC3       CD1

{ 1332} > GENERATE 1 MEMBER LIST
{ 1333} > 'CD2'  'CD1'  'CD2'

     /----------------  MEMBER INCIDENCES ----------------/

         MEMBER          INCIDENCES

        CD2          CD1       CD2

{ 1334} > REPEAT 3 LIST
{ 1335} > 1  1  1
{ 1336} > 2  2  2
{ 1337} > 3  3  3

     /----------------  MEMBER INCIDENCES ----------------/

         MEMBER          INCIDENCES

        CD3          CD2       CD3

        CD4          CD3       CD4

        CD5          CD4       CD5

{ 1338} > GENERATE 4 MEMBERS LIST
{ 1339} > 'CD11'  'CD1'  'CD101'
{ 1340} > 'CD12'  'CD1'  'CD102'
{ 1341} > 'CD13'  'CD1'  'CD103'
{ 1342} > 'CD14'  'CD1'  'CD104'

     /----------------  MEMBER INCIDENCES ----------------/

         MEMBER          INCIDENCES

        CD11         CD1       CD101
        CD12         CD1       CD102
        CD13         CD1       CD103
        CD14         CD1       CD104

{ 1343} > REPEAT 4 LIST
{ 1344} > 10  1   100
{ 1345} > 20  2   200
{ 1346} > 30  3   300
{ 1347} > 40  4   400

     /----------------  MEMBER INCIDENCES ----------------/

         MEMBER          INCIDENCES

        CD21         CD2       CD201
        CD22         CD2       CD202
        CD23         CD2       CD203
        CD24         CD2       CD204

        CD31         CD3       CD301
        CD32         CD3       CD302
        CD33         CD3       CD303
        CD34         CD3       CD304

        CD41         CD4       CD401
        CD42         CD4       CD402
        CD43         CD4       CD403
        CD44         CD4       CD404

        CD51         CD5       CD501
        CD52         CD5       CD502
        CD53         CD5       CD503
        CD54         CD5       CD504

{ 1348} >
{ 1349} > GENERATE 1 MEMBER LIST
{ 1350} > 'CE1'  'SC4'  'CE1'

     /----------------  MEMBER INCIDENCES ----------------/

         MEMBER          INCIDENCES

        CE1          SC4       CE1

{ 1351} > GENERATE 1 MEMBER LIST
```

```
{ 1352} > 'CE2'  'CE1'  'CE2'

     /----------------  MEMBER INCIDENCES ----------------/

         MEMBER          INCIDENCES

        CE2          CE1       CE2

{ 1353} > REPEAT 2 LIST
{ 1354} > 1  1  1
{ 1355} > 2  2  2

     /----------------  MEMBER INCIDENCES ----------------/

         MEMBER          INCIDENCES

        CE3          CE2       CE3

        CE4          CE3       CE4

{ 1356} > GENERATE 4 MEMBERS LIST
{ 1357} > 'CE11'  'CE1'  'CE101'
{ 1358} > 'CE12'  'CE1'  'CE102'
{ 1359} > 'CE13'  'CE1'  'CE103'
{ 1360} > 'CE14'  'CE1'  'CE104'

     /----------------  MEMBER INCIDENCES ----------------/

         MEMBER          INCIDENCES

        CE11         CE1       CE101
        CE12         CE1       CE102
        CE13         CE1       CE103
        CE14         CE1       CE104

{ 1361} > REPEAT 3 LIST
{ 1362} > 10  1   100
{ 1363} > 20  2   200
{ 1364} > 30  3   300

     /----------------  MEMBER INCIDENCES ----------------/

         MEMBER          INCIDENCES

        CE21         CE2       CE201
        CE22         CE2       CE202
        CE23         CE2       CE203
        CE24         CE2       CE204

        CE31         CE3       CE301
        CE32         CE3       CE302
        CE33         CE3       CE303
        CE34         CE3       CE304

        CE41         CE4       CE401
        CE42         CE4       CE402
        CE43         CE4       CE403
        CE44         CE4       CE404

{ 1365} >
{ 1366} > GENERATE 1 MEMBER LIST
{ 1367} > 'CF1'  'SC5'  'CF1'

     /----------------  MEMBER INCIDENCES ----------------/

         MEMBER          INCIDENCES

        CF1          SC5       CF1

{ 1368} > GENERATE 1 MEMBER LIST
{ 1369} > 'CF2'  'CF1'  'CF2'

     /----------------  MEMBER INCIDENCES ----------------/

         MEMBER          INCIDENCES

        CF2          CF1       CF2

{ 1370} > REPEAT 2 LIST
{ 1371} > 1  1  1
{ 1372} > 2  2  2

     /----------------  MEMBER INCIDENCES ----------------/

         MEMBER          INCIDENCES

        CF3          CF2       CF3

        CF4          CF3       CF4

{ 1373} > GENERATE 4 MEMBERS LIST
{ 1374} > 'CF11'  'CF1'  'CF101'
{ 1375} > 'CF12'  'CF1'  'CF102'
{ 1376} > 'CF13'  'CF1'  'CF103'
{ 1377} > 'CF14'  'CF1'  'CF104'
```

```
     /----------------  MEMBER INCIDENCES -----------------/

         MEMBER          INCIDENCES

        CF11         CF1       CF101
        CF12         CF1       CF102
        CF13         CF1       CF103
        CF14         CF1       CF104

{ 1378} > REPEAT 3 LIST
{ 1379} > 10  1   100
{ 1380} > 20  2   200
{ 1381} > 30  3   300

     /----------------  MEMBER INCIDENCES -----------------/

         MEMBER          INCIDENCES

        CF21         CF2       CF201
        CF22         CF2       CF202
        CF23         CF2       CF203
        CF24         CF2       CF204

        CF31         CF3       CF301
        CF32         CF3       CF302
        CF33         CF3       CF303
        CF34         CF3       CF304

        CF41         CF4       CF401
        CF42         CF4       CF402
        CF43         CF4       CF403
        CF44         CF4       CF404

{ 1382} >
{ 1383} > GENERATE 1 MEMBER LIST
{ 1384} > 'CG1'  'SC6'  'CG1'

     /----------------  MEMBER INCIDENCES -----------------/

         MEMBER          INCIDENCES

        CG1          SC6       CG1

{ 1385} > GENERATE 1 MEMBER LIST
{ 1386} > 'CG2'  'CG1'  'CG2'

     /----------------  MEMBER INCIDENCES -----------------/

         MEMBER          INCIDENCES

        CG2          CG1       CG2

{ 1387} > REPEAT 2 LIST
{ 1388} > 1  1  1
{ 1389} > 2  2  2

     /----------------  MEMBER INCIDENCES -----------------/

         MEMBER          INCIDENCES

        CG3          CG2       CG3

        CG4          CG3       CG4

{ 1390} > GENERATE 4 MEMBERS LIST
{ 1391} > 'CG11'  'CG1'  'CG101'
{ 1392} > 'CG12'  'CG1'  'CG102'
{ 1393} > 'CG13'  'CG1'  'CG103'
{ 1394} > 'CG14'  'CG1'  'CG104'

     /----------------  MEMBER INCIDENCES -----------------/

         MEMBER          INCIDENCES

        CG11         CG1       CG101
        CG12         CG1       CG102
        CG13         CG1       CG103
        CG14         CG1       CG104

{ 1395} > REPEAT 3 LIST
{ 1396} > 10  1   100
{ 1397} > 20  2   200
{ 1398} > 30  3   300

     /----------------  MEMBER INCIDENCES -----------------/

         MEMBER          INCIDENCES

        CG21         CG2       CG201
        CG22         CG2       CG202
        CG23         CG2       CG203
        CG24         CG2       CG204

        CG31         CG3       CG301
        CG32         CG3       CG302
        CG33         CG3       CG303
```

```
        CG34         CG3       CG304

        CG41         CG4       CG401
        CG42         CG4       CG402
        CG43         CG4       CG403
        CG44         CG4       CG404

{ 1399} >
{ 1400} > GENERATE 1 MEMBER LIST
{ 1401} > 'CH1'  'SC7'  'CH1'

     /----------------  MEMBER INCIDENCES ----------------/

         MEMBER          INCIDENCES

        CH1          SC7       CH1

{ 1402} > GENERATE 1 MEMBER LIST
{ 1403} > 'CH2'  'CH1'  'CH2'

     /----------------  MEMBER INCIDENCES ----------------/

         MEMBER          INCIDENCES

        CH2          CH1       CH2

{ 1404} > REPEAT 2 LIST
{ 1405} > 1  1  1
{ 1406} > 2  2  2

     /----------------  MEMBER INCIDENCES ----------------/

         MEMBER          INCIDENCES

        CH3          CH2       CH3

        CH4          CH3       CH4

{ 1407} > GENERATE 4 MEMBERS LIST
{ 1408} > 'CH11'  'CH1'  'CH101'
{ 1409} > 'CH12'  'CH1'  'CH102'
{ 1410} > 'CH13'  'CH1'  'CH103'
{ 1411} > 'CH14'  'CH1'  'CH104'

     /----------------  MEMBER INCIDENCES ----------------/

         MEMBER          INCIDENCES

        CH11         CH1       CH101
        CH12         CH1       CH102
        CH13         CH1       CH103
        CH14         CH1       CH104

{ 1412} > REPEAT 3 LIST
{ 1413} > 10  1   100
{ 1414} > 20  2   200
{ 1415} > 30  3   300

     /----------------  MEMBER INCIDENCES ----------------/

         MEMBER          INCIDENCES

        CH21         CH2       CH201
        CH22         CH2       CH202
        CH23         CH2       CH203
        CH24         CH2       CH204

        CH31         CH3       CH301
        CH32         CH3       CH302
        CH33         CH3       CH303
        CH34         CH3       CH304

        CH41         CH4       CH401
        CH42         CH4       CH402
        CH43         CH4       CH403
        CH44         CH4       CH404

{ 1416} >
{ 1417} > $==========================LOWER DECK PLATE MEMBERS==========================
{ 1418} > MEMBER INCIDENCES
{ 1419} > GENERATE 3 MEMBERS LIST
{ 1420} > 'PLATE1'   'BP1'    'BP2'
{ 1421} > 'PLATE2'   'BP12'   'BP13'
{ 1422} > 'PLATE3'   'BP23'   'BP24'

     /----------------  MEMBER INCIDENCES ----------------/

         MEMBER          INCIDENCES

        PLATE1       BP1       BP2
        PLATE2       BP12      BP13
        PLATE3       BP23      BP24

{ 1423} >
{ 1424} > GENERATE 4 MEMBERS LIST
{ 1425} > 'PLATE4'  'BP2'   'BP3'
```

```
{ 1426} > 'PLATE5'  'BP13'  'BP14'
{ 1427} > 'PLATE6'  'BP24'  'BP25'
{ 1428} > 'PLATE7'  'BP35'  'BP36'

     /----------------  MEMBER INCIDENCES -----------------/

         MEMBER          INCIDENCES

        PLATE4       BP2       BP3
        PLATE5       BP13      BP14
        PLATE6       BP24      BP25
        PLATE7       BP35      BP36

{ 1429} >
{ 1430} > REPEAT 3 LIST
{ 1431} >   4  1   1
{ 1432} >   8  2   2
{ 1433} >  12  3   3

     /----------------  MEMBER INCIDENCES -----------------/

         MEMBER          INCIDENCES

        PLATE8       BP3       BP4
        PLATE9       BP14      BP15
        PLATE10      BP25      BP26
        PLATE11      BP36      BP37

        PLATE12      BP4       BP5
        PLATE13      BP15      BP16
        PLATE14      BP26      BP27
        PLATE15      BP37      BP38

        PLATE16      BP5       BP6
        PLATE17      BP16      BP17
        PLATE18      BP27      BP28
        PLATE19      BP38      BP39

{ 1434} >
{ 1435} > GENERATE 3 MEMBERS LIST
{ 1436} > 'PLATE20'  'BP17'   'BP18'
{ 1437} > 'PLATE21'  'BP28'   'BP29'
{ 1438} > 'PLATE22'  'BP39'   'BP40'

     /----------------  MEMBER INCIDENCES -----------------/

         MEMBER          INCIDENCES

        PLATE20      BP17      BP18
        PLATE21      BP28      BP29
        PLATE22      BP39      BP40

{ 1439} >
{ 1440} > GENERATE 4 MEMBERS LIST
{ 1441} > 'PLATE23'  'BP7'   'BP8'
{ 1442} > 'PLATE24'  'BP18'  'BP19'
{ 1443} > 'PLATE25'  'BP29'  'BP30'
{ 1444} > 'PLATE26'  'BP40'  'BP41'

     /----------------  MEMBER INCIDENCES -----------------/

         MEMBER          INCIDENCES

        PLATE23      BP7       BP8
        PLATE24      BP18      BP19
        PLATE25      BP29      BP30
        PLATE26      BP40      BP41

{ 1445} >
{ 1446} > REPEAT 1 LIST
{ 1447} >   4    2    2

     /----------------  MEMBER INCIDENCES -----------------/

         MEMBER          INCIDENCES

        PLATE27      BP9       BP10
        PLATE28      BP20      BP21
        PLATE29      BP31      BP32
        PLATE30      BP42      BP43

{ 1448} >
{ 1449} > GENERATE 3 MEMBERS LIST
{ 1450} > 'PLATE31'   'BP10'   'BP11'
{ 1451} > 'PLATE32'   'BP21'   'BP22'
{ 1452} > 'PLATE33'   'BP32'   'BP33'

     /----------------  MEMBER INCIDENCES -----------------/

         MEMBER          INCIDENCES

        PLATE31      BP10      BP11
        PLATE32      BP21      BP22
        PLATE33      BP32      BP33

{ 1453} >
```

```
{ 1454} > GENERATE 4 MEMBERS LIST
{ 1455} > 'PLATE34'  'BP8'   'BP9'
{ 1456} > 'PLATE35'  'BP19'  'BP20'
{ 1457} > 'PLATE36'  'BP30'  'BP31'
{ 1458} > 'PLATE37'  'BP41'  'BP42'

     /----------------  MEMBER INCIDENCES ----------------/

         MEMBER          INCIDENCES

        PLATE34      BP8       BP9
        PLATE35      BP19      BP20
        PLATE36      BP30      BP31
        PLATE37      BP41      BP42

{ 1459} >
{ 1460} > $************************PLATE USED AS POST*********************************************
{ 1461} > GENERATE 8 MEMBERS LIST
{ 1462} > 'PLATE38'  'P101'  'P102'
{ 1463} > 'PLATE39'  'P102'  'P103'
{ 1464} > 'PLATE40'  'P104'  'P105'
{ 1465} > 'PLATE41'  'P105'  'P106'
{ 1466} >
{ 1467} > $=============================PLENUM CHANNEL MEMBERS========================
{ 1468} > MEMBER INCIDENCES

     /----------------  MEMBER INCIDENCES ----------------/

         MEMBER          INCIDENCES

        PLATE38      P101      P102
        PLATE39      P102      P103
        PLATE40      P104      P105
        PLATE41      P105      P106

{ 1469} > GENERATE 1 MEMBERS LIST
{ 1470} > 'PCHAN1'  'C1'  'C2'

     /----------------  MEMBER INCIDENCES ----------------/

         MEMBER          INCIDENCES

        PCHAN1       C1        C2

{ 1471} > GENERATE 3 MEMBERS LIST
{ 1472} > 'PCHAN2'  'C2'  'C3'
{ 1473} > 'PCHAN3'  'C3'  'C4'
{ 1474} > 'PCHAN4'  'C4'  'C5'

     /----------------  MEMBER INCIDENCES ----------------/

         MEMBER          INCIDENCES

        PCHAN2       C2        C3
        PCHAN3       C3        C4
        PCHAN4       C4        C5

{ 1475} >
{ 1476} > REPEAT 1 LIST
{ 1477} > 19    16    16

     /----------------  MEMBER INCIDENCES ----------------/

         MEMBER          INCIDENCES

        PCHAN21      C18       C19
        PCHAN22      C19       C20
        PCHAN23      C20       C21

{ 1478} >
{ 1479} > GENERATE 2 MEMBERS LIST
{ 1480} > 'PCHAN5'  'C5'  'C27'
{ 1481} > 'PCHAN24' 'C21'  'C22'

     /----------------  MEMBER INCIDENCES ----------------/

         MEMBER          INCIDENCES

        PCHAN5       C5        C27
        PCHAN24      C21       C22

{ 1482} >
{ 1483} > GENERATE 4 MEMBERS LIST
{ 1484} > 'PCHAN9'  'C7'  'C8'
{ 1485} > 'PCHAN10' 'C8'  'C9'
{ 1486} > 'PCHAN11' 'C9'  'C10'
{ 1487} > 'PCHAN12' 'C10' 'C11'

     /----------------  MEMBER INCIDENCES ----------------/

         MEMBER          INCIDENCES

        PCHAN9       C7        C8
        PCHAN10      C8        C9
        PCHAN11      C9        C10
        PCHAN12      C10       C11
```

```
{ 1488} >
{ 1489} > REPEAT 1 LIST
{ 1490} > 16    15    15

     /----------------  MEMBER INCIDENCES -----------------/

         MEMBER          INCIDENCES

        PCHAN25      C22       C23
        PCHAN26      C23       C24
        PCHAN27      C24       C25
        PCHAN28      C25       C26

{ 1491} >
{ 1492} > GENERATE 8 MEMBERS LIST
{ 1493} > 'PCHAN13'  'C12' 'C1'
{ 1494} > 'PCHAN14'  'C13' 'C11'
{ 1495} > 'PCHAN15'  'C14' 'C12'
{ 1496} > 'PCHAN16'  'C17' 'C13'
{ 1497} > 'PCHAN17'  'C14' 'C15'
{ 1498} > 'PCHAN18'  'C16' 'C17'
{ 1499} > 'PCHAN19'  'C18' 'C15'
{ 1500} > 'PCHAN20'  'C26' 'C16'

     /----------------  MEMBER INCIDENCES -----------------/

         MEMBER          INCIDENCES

        PCHAN13      C12       C1
        PCHAN14      C13       C11
        PCHAN15      C14       C12
        PCHAN16      C17       C13
        PCHAN17      C14       C15
        PCHAN18      C16       C17
        PCHAN19      C18       C15
        PCHAN20      C26       C16

{ 1501} >
{ 1502} > GENERATE 4 MEMBERS LIST
{ 1503} > 'PCHAN6'  'C27' 'C28'
{ 1504} > 'PCHAN7'  'C28' 'C29'
{ 1505} > 'PCHAN8'  'C29' 'C7'
{ 1506} > 'PCHAN29' 'C27' 'C6'

     /----------------  MEMBER INCIDENCES -----------------/

         MEMBER          INCIDENCES

        PCHAN6       C27       C28
        PCHAN7       C28       C29
        PCHAN8       C29       C7
        PCHAN29      C27       C6

{ 1507} >
{ 1508} > $============================SUPPORT POST MEMBERS=========================
{ 1509} > MEMBER INCIDENCES
{ 1510} > GENERATE 5 MEMBERS LIST
{ 1511} > 'TS1'  'BP13'  'TP13'
{ 1512} > 'TS2'  'BP14'  'TP14'
{ 1513} > 'TS3'  'BP15'  'TP15'
{ 1514} > 'TS4'  'BP16'  'P101'
{ 1515} > 'TS5'  'P101'  'TP16'

     /----------------  MEMBER INCIDENCES -----------------/

         MEMBER          INCIDENCES

        TS1          BP13      TP13
        TS2          BP14      TP14
        TS3          BP15      TP15
        TS4          BP16      P101
        TS5          P101      TP16

{ 1516} >
{ 1517} > GENERATE 17 MEMBERS LIST
{ 1518} >  'TS6'  'BP25'  'TP25'
{ 1519} >  'TS7'  'BP26'  'TP26'
{ 1520} >  'TS8'  'BP27'  'P104'
{ 1521} >  'TS9'  'P104'  'TP27'
{ 1522} > 'TS10'  'BP29'  'P106'
{ 1523} > 'TS11'  'P106'  'TP29'
{ 1524} > 'TS12'  'BP18'  'P103'
{ 1525} > 'TS13'  'P103'  'TP18'
{ 1526} > 'TS14'  'BP19'  'TP19'
{ 1527} > 'TS15'  'BP20'  'TP20'
{ 1528} > 'TS16'  'BP21'  'TP21'
{ 1529} > 'TS17'  'BP29'  'TP29'
{ 1530} > 'TS18'  'BP30'  'TP30'
{ 1531} > 'TS19'  'BP31'  'TP31'
{ 1532} >
{ 1533} > $=======================TOP COVER PLATE MEMBERS==============================
{ 1534} > MEMBER INCIDENCES

     /----------------  MEMBER INCIDENCES -----------------/
```

```
         MEMBER          INCIDENCES

        TS6          BP25      TP25
        TS7          BP26      TP26
        TS8          BP27      P104
        TS9          P104      TP27
        TS10         BP29      P106
        TS11         P106      TP29
        TS12         BP18      P103
        TS13         P103      TP18
        TS14         BP19      TP19
        TS15         BP20      TP20
        TS16         BP21      TP21
        TS17         BP29      TP29
        TS18         BP30      TP30
        TS19         BP31      TP31

{ 1535} > GENERATE 4 MEMBERS LIST
{ 1536} > 'TCPL1'   'SR101'  'SR115'
{ 1537} > 'TCPL2'   'SR102'  'SR116'
{ 1538} > 'TCPL3'   'SR101'  'SR102'
{ 1539} > 'TCPL4'   'SR115'  'SR116'

     /----------------  MEMBER INCIDENCES -----------------/

         MEMBER          INCIDENCES

        TCPL1        SR101     SR115
        TCPL2        SR102     SR116
        TCPL3        SR101     SR102
        TCPL4        SR115     SR116

{ 1540} >
{ 1541} > REPEAT 2 LIST
{ 1542} >  4   2   2
{ 1543} >  8   4   4

     /----------------  MEMBER INCIDENCES -----------------/

         MEMBER          INCIDENCES

        TCPL5        SR103     SR117
        TCPL6        SR104     SR118
        TCPL7        SR103     SR104
        TCPL8        SR117     SR118

        TCPL9        SR105     SR119
        TCPL10       SR106     SR120
        TCPL11       SR105     SR106
        TCPL12       SR119     SR120

{ 1544} >
{ 1545} > GENERATE 2 MEMBERS LIST
{ 1546} > 'TCPL13'   'SR201'   'SR202'
{ 1547} > 'TCPL14'   'SR205'   'SR206'

     /----------------  MEMBER INCIDENCES -----------------/

         MEMBER          INCIDENCES

        TCPL13       SR201     SR202
        TCPL14       SR205     SR206

{ 1548} >
{ 1549} > GENERATE 4 MEMBERS LIST
{ 1550} > 'TCPL15'   'SR107'  'SR121'
{ 1551} > 'TCPL16'   'SR108'  'SR122'
{ 1552} > 'TCPL17'   'SR107'  'SR108'
{ 1553} > 'TCPL18'   'SR121'  'SR122'

     /----------------  MEMBER INCIDENCES -----------------/

         MEMBER          INCIDENCES

        TCPL15       SR107     SR121
        TCPL16       SR108     SR122
        TCPL17       SR107     SR108
        TCPL18       SR121     SR122

{ 1554} >
{ 1555} > GENERATE 1 MEMBERS LIST
{ 1556} > 'TCPL19'   'SR122'   'SR123'

     /----------------  MEMBER INCIDENCES -----------------/

         MEMBER          INCIDENCES

        TCPL19       SR122     SR123

{ 1557} >
{ 1558} > GENERATE 4 MEMBERS LIST
{ 1559} > 'TCPL20'   'SR109'  'SR123'
{ 1560} > 'TCPL21'   'SR110'  'SR124'
{ 1561} > 'TCPL22'   'SR109'  'SR110'
{ 1562} > 'TCPL23'   'SR123'  'SR124'
```

```
     /----------------  MEMBER INCIDENCES ----------------/

         MEMBER          INCIDENCES

        TCPL20       SR109     SR123
        TCPL21       SR110     SR124
        TCPL22       SR109     SR110
        TCPL23       SR123     SR124

{ 1563} >
{ 1564} > REPEAT 2 LIST
{ 1565} >  4   2   2
{ 1566} >  8   4   4

     /----------------  MEMBER INCIDENCES ----------------/

         MEMBER          INCIDENCES

        TCPL24       SR111     SR125
        TCPL25       SR112     SR126
        TCPL26       SR111     SR112
        TCPL27       SR125     SR126

        TCPL28       SR113     SR127
        TCPL29       SR114     SR128
        TCPL30       SR113     SR114
        TCPL31       SR127     SR128

{ 1567} >
{ 1568} > GENERATE 4 MEMBERS LIST
{ 1569} > 'TCPL32'   'SR129'  'SR147'
{ 1570} > 'TCPL33'   'SR130'  'SR148'
{ 1571} > 'TCPL34'   'SR129'  'SR130'
{ 1572} > 'TCPL35'   'SR147'  'SR148'

     /----------------  MEMBER INCIDENCES ----------------/

         MEMBER          INCIDENCES

        TCPL32       SR129     SR147
        TCPL33       SR130     SR148
        TCPL34       SR129     SR130
        TCPL35       SR147     SR148

{ 1573} >
{ 1574} > REPEAT 8 LIST
{ 1575} >  4    2    2
{ 1576} >  8    4    4
{ 1577} > 12    6    6
{ 1578} > 16    8    8
{ 1579} > 20   10   10
{ 1580} > 24   12   12
{ 1581} > 28   14   14
{ 1582} > 32   16   16

     /----------------  MEMBER INCIDENCES ----------------/

         MEMBER          INCIDENCES

        TCPL36       SR131     SR149
        TCPL37       SR132     SR150
        TCPL38       SR131     SR132
        TCPL39       SR149     SR150

        TCPL40       SR133     SR151
        TCPL41       SR134     SR152
        TCPL42       SR133     SR134
        TCPL43       SR151     SR152

        TCPL44       SR135     SR153
        TCPL45       SR136     SR154
        TCPL46       SR135     SR136
        TCPL47       SR153     SR154

        TCPL48       SR137     SR155
        TCPL49       SR138     SR156
        TCPL50       SR137     SR138
        TCPL51       SR155     SR156

        TCPL52       SR139     SR157
        TCPL53       SR140     SR158
        TCPL54       SR139     SR140
        TCPL55       SR157     SR158

        TCPL56       SR141     SR159
        TCPL57       SR142     SR160
        TCPL58       SR141     SR142
        TCPL59       SR159     SR160

        TCPL60       SR143     SR161
        TCPL61       SR144     SR162
        TCPL62       SR143     SR144
        TCPL63       SR161     SR162

        TCPL64       SR145     SR163
        TCPL65       SR146     SR164
```

```
        TCPL66       SR145     SR146
        TCPL67       SR163     SR164

{ 1583} >
{ 1584} > GENERATE 4 MEMBERS LIST
{ 1585} > 'TCPL68'   'SR165'  'SR179'
{ 1586} > 'TCPL69'   'SR166'  'SR180'
{ 1587} > 'TCPL70'   'SR165'  'SR166'
{ 1588} > 'TCPL71'   'SR179'  'SR180'

     /----------------  MEMBER INCIDENCES -----------------/

         MEMBER          INCIDENCES

        TCPL68       SR165     SR179
        TCPL69       SR166     SR180
        TCPL70       SR165     SR166
        TCPL71       SR179     SR180

{ 1589} >
{ 1590} > REPEAT 6 LIST
{ 1591} >  4    2    2
{ 1592} >  8    4    4
{ 1593} > 12    6    6
{ 1594} > 16    8    8
{ 1595} > 20   10   10
{ 1596} > 24   12   12

     /----------------  MEMBER INCIDENCES -----------------/

         MEMBER          INCIDENCES

        TCPL72       SR167     SR181
        TCPL73       SR168     SR182
        TCPL74       SR167     SR168
        TCPL75       SR181     SR182

        TCPL76       SR169     SR183
        TCPL77       SR170     SR184
        TCPL78       SR169     SR170
        TCPL79       SR183     SR184

        TCPL80       SR171     SR185
        TCPL81       SR172     SR186
        TCPL82       SR171     SR172
        TCPL83       SR185     SR186

        TCPL84       SR173     SR187
        TCPL85       SR174     SR188
        TCPL86       SR173     SR174
        TCPL87       SR187     SR188

        TCPL88       SR175     SR189
        TCPL89       SR176     SR190
        TCPL90       SR175     SR176
        TCPL91       SR189     SR190

        TCPL92       SR177     SR191
        TCPL93       SR178     SR192
        TCPL94       SR177     SR178
        TCPL95       SR191     SR192

{ 1597} >
{ 1598} > GENERATE 1 MEMBERS LIST
{ 1599} > 'TCPL96'   'SR115'   'SR129'

     /----------------  MEMBER INCIDENCES -----------------/

         MEMBER          INCIDENCES

        TCPL96       SR115     SR129

{ 1600} >
{ 1601} > REPEAT 5 LIST
{ 1602} >   1    1    1
{ 1603} >   2    2    2
{ 1604} >   3    3    3
{ 1605} >   4    4    4
{ 1606} >   5    5    5

     /----------------  MEMBER INCIDENCES -----------------/

         MEMBER          INCIDENCES

        TCPL97       SR116     SR130

        TCPL98       SR117     SR131

        TCPL99       SR118     SR132

        TCPL100      SR119     SR133

        TCPL101      SR120     SR134

{ 1607} >
{ 1608} > GENERATE 2 MEMBERS LIST
```

```
{ 1609} > 'TCPL102'   'SR121'   'SR137'
{ 1610} > 'TCPL103'   'SR122'   'SR138'

     /----------------  MEMBER INCIDENCES -----------------/

         MEMBER          INCIDENCES

        TCPL102      SR121     SR137
        TCPL103      SR122     SR138

{ 1611} >
{ 1612} > GENERATE 1 MEMBERS LIST
{ 1613} > 'TCPL104'   'SR123'   'SR141'

     /----------------  MEMBER INCIDENCES -----------------/

         MEMBER          INCIDENCES

        TCPL104      SR123     SR141

{ 1614} >
{ 1615} > REPEAT 5 LIST
{ 1616} >   1    1    1
{ 1617} >   2    2    2
{ 1618} >   3    3    3
{ 1619} >   4    4    4
{ 1620} >   5    5    5

     /----------------  MEMBER INCIDENCES -----------------/

         MEMBER          INCIDENCES

        TCPL105      SR124     SR142

        TCPL106      SR125     SR143

        TCPL107      SR126     SR144

        TCPL108      SR127     SR145

        TCPL109      SR128     SR146

{ 1621} >
{ 1622} > GENERATE 1 MEMBERS LIST
{ 1623} > 'TCPL110'   'SR149'   'SR165'

     /----------------  MEMBER INCIDENCES -----------------/

         MEMBER          INCIDENCES

        TCPL110      SR149     SR165

{ 1624} >
{ 1625} > REPEAT 13 LIST
{ 1626} >   1    1    1
{ 1627} >   2    2    2
{ 1628} >   3    3    3
{ 1629} >   4    4    4
{ 1630} >   5    5    5
{ 1631} >   6    6    6
{ 1632} >   7    7    7
{ 1633} >   8    8    8
{ 1634} >   9    9    9
{ 1635} >  10   10   10
{ 1636} >  11   11   11
{ 1637} >  12   12   12
{ 1638} >  13   13   13

     /----------------  MEMBER INCIDENCES -----------------/

         MEMBER          INCIDENCES

        TCPL111      SR150     SR166

        TCPL112      SR151     SR167

        TCPL113      SR152     SR168

        TCPL114      SR153     SR169

        TCPL115      SR154     SR170

        TCPL116      SR155     SR171

        TCPL117      SR156     SR172

        TCPL118      SR157     SR173

        TCPL119      SR158     SR174

        TCPL120      SR159     SR175

        TCPL121      SR160     SR176

        TCPL122      SR161     SR177
```

```
        TCPL123      SR162     SR178

{ 1639} >
{ 1640} > GENERATE 2 MEMBERS LIST
{ 1641} > 'TCPL124'  'SR203'  'SR204'
{ 1642} > 'TCPL125'  'SR207'  'SR208'

     /----------------  MEMBER INCIDENCES -----------------/

         MEMBER          INCIDENCES

        TCPL124      SR203     SR204
        TCPL125      SR207     SR208

{ 1643} >
{ 1644} > $=========TOP PLATES BETWEEN DOUBLE BEAM========
{ 1645} > GENERATE 6 MEMBERS LIST
{ 1646} > 'TCPL126'  'SR110'  'SR111'
{ 1647} > 'TCPL127'  'SR124'  'SR125'
{ 1648} > 'TCPL128'  'SR142'  'SR143'
{ 1649} > 'TCPL129'  'SR160'  'SR161'
{ 1650} > 'TCPL130'  'SR176'  'SR177'
{ 1651} > 'TCPL131'  'SR190'  'SR191'

     /----------------  MEMBER INCIDENCES -----------------/

         MEMBER          INCIDENCES

        TCPL126      SR110     SR111
        TCPL127      SR124     SR125
        TCPL128      SR142     SR143
        TCPL129      SR160     SR161
        TCPL130      SR176     SR177
        TCPL131      SR190     SR191

{ 1652} >
{ 1653} > $
{ 1654} > $*********************************************************************
{ 1655} > $
{ 1656} > STATUS SUPPORT 'WA1' TO 'WA5' 'WA7' TO 'WA16' -
{ 1657} >_               'WA18' TO 'WA33' 'WA35' TO 'WA43' 'TC27' TO 'TC29'
{ 1658} >
{ 1659} > DELETIONS
{ 1660} > MEM 'BEAM13' 'PLATE17' 'PLATE20' 'TCPL19'

 **** INFO_STMJDL -- THE FOLLOWING JOINTS  WERE MADE INACTIVE WHEN THE ABOVE MEMBERS WERE DELETED
                     BP17
{ 1661} > JOINT 'BP17' 'P14'
{ 1662} > ADDITIONS
{ 1663} >
{ 1664} > $*********************************************************************
{ 1665} > $
{ 1666} > JOINT TIES
{ 1667} > 'SR101' TO 'SR200' EQUALS 'S1' TO 'S100'
{ 1668} >
{ 1669} > SLAVE RELEASES
{ 1670} > 'SR101' TO 'SR196' MOM X Y Z
{ 1671} > 'SR197' TO 'SR200' MOM X Y
{ 1672} >
{ 1673} > $=======================MATERIAL PROPERTIES==========================
{ 1674} > DEFINE GROUP 'BEAM'    MEM 'BEAM1'  TO 'BEAM12' 'BEAM14' TO 'BEAM29'
{ 1675} > DEFINE GROUP 'PCHAN'   MEM 'PCHAN1' TO 'PCHAN29'
{ 1676} > DEFINE GROUP 'TS'      MEM 'TS1' TO 'TS19'
{ 1677} > DEFINE GROUP 'PLATE1' MEM 'PLATE1' 'PLATE3' 'PLATE4' TO 'PLATE16' BY 4 'PLATE23' TO 'PLATE31' BY 4 -
{ 1678} >_                          'PLATE7' TO 'PLATE19' BY 4 'PLATE22' TO 'PLATE30' BY 4 'PLATE33' -
{ 1679} >_                          'PLATE34' 'PLATE37'
{ 1680} > DEFINE GROUP 'PLATE2' MEM 'PLATE2' TO 'PLATE18' BY 4 'PLATE24' TO 'PLATE32' BY 4 -
{ 1681} >_                          'PLATE5' TO 'PLATE13' BY 4 'PLATE21' TO 'PLATE29' BY 4 'PLATE35' 'PLATE36'
{ 1682} > DEFINE GROUP 'PLATE3' MEM 'PLATE38' TO 'PLATE41'
{ 1683} > DEFINE GROUP 'TCPLAT' MEM 'TCPL1' TO 'TCPL12' 'TCPL15' TO 'TCPL18' 'TCPL20' TO 'TCPL95'
{ 1684} > DEFINE GROUP 'TCPLAT1' MEM 'TCPL96' TO 'TCPL123'
{ 1685} > DEFINE GROUP 'TCPLAT2' MEM 'TCPL13' 'TCPL14' 'TCPL124' TO 'TCPL131'
{ 1686} > DEFINE GROUP 'HEX'    MEM 'HEX1' TO 'HEX92'
{ 1687} > DEFINE GROUP 'RGS'    MEM 'RGSA1' TO 'RGSA28' 'RGSB1' TO 'RGSB36' 'RGSC1' TO 'RGSC28'
{ 1688} >
{ 1689} > $RIGID LINKS CONNECTING CHANNELS TO BEAMS ALONG X-SIDE, Z-SIDE, AND CORNERS
{ 1690} > DEFINE GROUP 'RIGCBX' MEM 'RIGD112' TO 'RIGD120' 'RIGD129' TO 'RIGD135'
{ 1691} > DEFINE GROUP 'RIGCBZ' MEM 'RIGD122' 'RIGD123'
{ 1692} > DEFINE GROUP 'RIGCBC' MEM 'RIGD111' 'RIGD121' 'RIGD124' TO 'RIGD128' 'RIGD136'
{ 1693} > DEFINE GROUP 'RIGCB'  GROUPS 'RIGCBX' 'RIGCBZ' 'RIGCBC'
{ 1694} >
{ 1695} > $RIGID LINKS CONNECTING CHANNELS TO TOP PLATE ALONG X-SIDE, Z-SIDE, AND CORNERS
{ 1696} > DEFINE GROUP 'RIGCTX' MEM 'RIGD138' TO 'RIGD146' 'RIGD155' TO 'RIGD161'
{ 1697} > DEFINE GROUP 'RIGCTZ' MEM 'RIGD148' 'RIGD149'
{ 1698} > DEFINE GROUP 'RIGCTC' MEM 'RIGD137' 'RIGD147' 'RIGD150' TO 'RIGD154' 'RIGD162'
{ 1699} > DEFINE GROUP 'RIGCT'  GROUPS 'RIGCTX' 'RIGCTZ' 'RIGCTC'
{ 1700} >
{ 1701} > DEFINE GROUP 'RIGB'   MEM 'RIGD77' TO 'RIGD110' 'RIGD163' TO 'RIGD168' 'RIGD182' TO 'RIGD184'
{ 1702} > DEFINE GROUP 'RIGD'   GROUPS 'RIGCB' 'RIGCT' 'RIGB'
{ 1703} >
{ 1704} > $RIGID LINKS REPRESENTING FLOOR BEAM WEBS, EXTERIOR AND INTERIOR WEBS
{ 1705} >
{ 1706} > DEFINE GROUP 'RIGWE2' MEM 'RIGD1' 'RIGD4' TO 'RIGD16' BY 4 'RIGD24' 'RIGD32' 'RIGD36' 'RIGD17' 'RIGD18' -
{ 1707} >_                          'RIGD3' TO 'RIGD19' BY 4 'RIGD27' 'RIGD35' 'RIGD38' -
{ 1708} >_                          'RIGD39' 'RIGD42' TO 'RIGD74' BY 4 -
{ 1709} >_                          'RIGD41' TO 'RIGD73' BY 4 'RIGD76' 'RIGD189' 'RIGD55'
```

```
{ 1710} > DEFINE GROUP 'RIGWE4' MEM 'RIGD20' 'RIGD23' 'RIGD28' 'RIGD31' 'RIGD56' 'RIGD187'
{ 1711} > DEFINE GROUP 'RIGWI2' MEM 'RIGD2' TO 'RIGD14' BY 4 'RIGD5' 'RIGD9' 'RIGD13' 'RIGD33' 'RIGD34' -
{ 1712} >_                          'RIGD37' 'RIGD40' 'RIGD44' 'RIGD75' 'RIGD72'
{ 1713} > DEFINE GROUP 'RIGWI4' MEM 'RIGD43' TO 'RIGD51' BY 4 'RIGD48' 'RIGD52' 'RIGD60' TO 'RIGD68' BY 4 -
{ 1714} >_                          'RIGD59' TO 'RIGD71' BY 4 'RIGD21' 'RIGD22' 'RIGD25' 'RIGD26' 'RIGD29' 'RIGD30'
{ 1715} > DEFINE GROUP 'RIGWES' MEM 'RIGD186' 'RIGD188'
{ 1716} > DEFINE GROUP 'WEB'  GROUPS 'RIGWI2' 'RIGWI4' 'RIGWE2' 'RIGWE4' 'RIGWES'
{ 1717} >
{ 1718} > DEFINE GROUP  'SRGD'   MEM 'SRGD1' TO 'SRGD102' 'PRGD1' TO 'PRGD92'
{ 1719} > DEFINE GROUP  'SRGD2'  MEM 'SRGD103' TO 'SRGD114'
{ 1720} > DEFINE GROUP  'LINKS'  GROUPS 'RGS' 'RIGD' 'WEB' 'SRGD' 'SRGD2'
{ 1721} >
{ 1722} > $STRAINER MODULE GROUPS
{ 1723} > DEFINE GROUP 'STNRD7P' MEM 'AA2' 'AB2' 'AC2' 'AE2' 'AG2' 'AH2' 'AJ2' 'BA2' 'BB2' 'BC2' 'BD2' -
{ 1724} >_                          'BE2' 'BF2' 'BG2' 'BH2' 'BJ2' 'CB2' 'CC2' 'CD2' 'CE2' 'CF2' 'CG2' 'CH2'
{ 1725} > DEFINE GROUP 'STNRD7F' MEM 'BE3' 'BE4' 'BF3' 'BF4' 'BG3' 'BG4' 'BH3' 'BH4' 'BJ3' 'BJ4' -
{ 1726} >_                          'CE3' 'CE4' 'CF3' 'CF4' 'CG3' 'CG4' 'CH3' 'CH4'
{ 1727} > DEFINE GROUP 'STNRD7' GROUPS 'STNRD7P' 'STNRD7F'
{ 1728} > DEFINE GROUP 'STNRD6F' MEM 'AA3' TO 'AA5' 'AB3' TO 'AB5' 'AC3' TO 'AC5' 'AE3' TO 'AE5' 'AG3' TO 'AG5' -
{ 1729} >_                          'AH3' TO 'AH5' 'AJ3' TO 'AJ5' 'BA3' TO 'BA5' 'BB3' TO 'BB5' 'BC3' TO 'BC5' -
{ 1730} >_                          'BD3' TO 'BD5' 'CB3' TO 'CB5' 'CC3' TO 'CC5' 'CD3' TO 'CD5'
{ 1731} >
{ 1732} > DEFINE GROUP 'MODULE' MEM 'AA1' 'AA11' TO 'AA14' 'AA21' TO 'AA24' 'AA31' TO 'AA34' 'AA41' TO 'AA44' 'AA51' TO 'AA54' -
{ 1733} >_                          'AB1' 'AB11' TO 'AB14' 'AB21' TO 'AB24' 'AB31' TO 'AB34' 'AB41' TO 'AB44' 'AB51' TO 'AB54' -
{ 1734} >_                          'AC1' 'AC11' TO 'AC14' 'AC21' TO 'AC24' 'AC31' TO 'AC34' 'AC41' TO 'AC44' 'AC51' TO 'AC54' -
{ 1735} >_                          'AE1' 'AE11' TO 'AE14' 'AE21' TO 'AE24' 'AE31' TO 'AE34' 'AE41' TO 'AE44' 'AE51' TO 'AE54' -
{ 1736} >_                          'AG1' 'AG11' TO 'AG14' 'AG21' TO 'AG24' 'AG31' TO 'AG34' 'AG41' TO 'AG44' 'AG51' TO 'AG54' -
{ 1737} >_                          'AH1' 'AH11' TO 'AH14' 'AH21' TO 'AH24' 'AH31' TO 'AH34' 'AH41' TO 'AH44' 'AH51' TO 'AH54' -
{ 1738} >_                          'AJ1' 'AJ11' TO 'AJ14' 'AJ21' TO 'AJ24' 'AJ31' TO 'AJ34' 'AJ41' TO 'AJ44' 'AJ51' TO 'AJ54' -
{ 1739} >_
{ 1740} >_                          'BA1' 'BA11' TO 'BA14' 'BA21' TO 'BA24' 'BA31' TO 'BA34' 'BA41' TO 'BA44' 'BA51' TO 'BA54' -
{ 1741} >_                          'BB1' 'BB11' TO 'BB14' 'BB21' TO 'BB24' 'BB31' TO 'BB34' 'BB41' TO 'BB44' 'BB51' TO 'BB54' -
{ 1742} >_                          'BC1' 'BC11' TO 'BC14' 'BC21' TO 'BC24' 'BC31' TO 'BC34' 'BC41' TO 'BC44' 'BC51' TO 'BC54' -
{ 1743} >_                          'BD1' 'BD11' TO 'BD14' 'BD21' TO 'BD24' 'BD31' TO 'BD34' 'BD41' TO 'BD44' 'BD51' TO 'BD54' -
{ 1744} >_                          'BE1' 'BE11' TO 'BE14' 'BE21' TO 'BE24' 'BE31' TO 'BE34' 'BE41' TO 'BE44' -
{ 1745} >_                          'BF1' 'BF11' TO 'BF14' 'BF21' TO 'BF24' 'BF31' TO 'BF34' 'BF41' TO 'BF44' -
{ 1746} >_                          'BG1' 'BG11' TO 'BG14' 'BG21' TO 'BG24' 'BG31' TO 'BG34' 'BG41' TO 'BG44' -
{ 1747} >_                          'BH1' 'BH11' TO 'BH14' 'BH21' TO 'BH24' 'BH31' TO 'BH34' 'BH41' TO 'BH44' -
{ 1748} >_                          'BJ1' 'BJ11' TO 'BJ14' 'BJ21' TO 'BJ24' 'BJ31' TO 'BJ34' 'BJ41' TO 'BJ44' -
{ 1749} >_
{ 1750} >_                          'CB1' 'CB11' TO 'CB14' 'CB21' TO 'CB24' 'CB31' TO 'CB34' 'CB41' TO 'CB44' 'CB51' TO 'CB54' -
{ 1751} >_                          'CC1' 'CC11' TO 'CC14' 'CC21' TO 'CC24' 'CC31' TO 'CC34' 'CC41' TO 'CC44' 'CC51' TO 'CC54' -
{ 1752} >_                          'CD1' 'CD11' TO 'CD14' 'CD21' TO 'CD24' 'CD31' TO 'CD34' 'CD41' TO 'CD44' 'CD51' TO 'CD54' -
{ 1753} >_                          'CE1' 'CE11' TO 'CE14' 'CE21' TO 'CE24' 'CE31' TO 'CE34' 'CE41' TO 'CE44' -
{ 1754} >_                          'CF1' 'CF11' TO 'CF14' 'CF21' TO 'CF24' 'CF31' TO 'CF34' 'CF41' TO 'CF44' -
{ 1755} >_                          'CG1' 'CG11' TO 'CG14' 'CG21' TO 'CG24' 'CG31' TO 'CG34' 'CG41' TO 'CG44' -
{ 1756} >_                          'CH1' 'CH11' TO 'CH14' 'CH21' TO 'CH24' 'CH31' TO 'CH34' 'CH41' TO 'CH44'
{ 1757} >
{ 1758} > DEFINE GROUP 'DISPJT' JOINTS -
{ 1759} >_'AA101' TO 'AA104' 'AB101' TO 'AB104' 'AC101' TO 'AC104' 'AE101' TO 'AE104' -
{ 1760} >_'AG101' TO 'AG104' 'AH101' TO 'AH104' 'AJ101' TO 'AJ104' 'BA101' TO 'BA104' -
{ 1761} >_'BB101' TO 'BB104' 'BC101' TO 'BC104' 'BD101' TO 'BD104' 'CB101' TO 'CB104' -
{ 1762} >_'CC101' TO 'CC104' 'CD101' TO 'CD104' -
{ 1763} >_
{ 1764} >_'AA501' TO 'AA504' 'AB501' TO 'AB504' 'AC501' TO 'AC504' 'AE501' TO 'AE504' -
{ 1765} >_'AG501' TO 'AG504' 'AH501' TO 'AH504' 'AJ501' TO 'AJ504' 'BA501' TO 'BA504' -
{ 1766} >_'BB501' TO 'BB504' 'BC501' TO 'BC504' 'BD501' TO 'BD504' 'CB501' TO 'CB504' -
{ 1767} >_'CC501' TO 'CC504' 'CD501' TO 'CD504' -
{ 1768} >_
{ 1769} >_'AA201' TO 'AA204' 'AB201' TO 'AB204' 'AC201' TO 'AC204' 'AE201' TO 'AE204' -
{ 1770} >_'AG201' TO 'AG204' 'AH201' TO 'AH204' 'AJ201' TO 'AJ204' 'BA201' TO 'BA204' -
{ 1771} >_'BB201' TO 'BB204' 'BC201' TO 'BC204' 'BD201' TO 'BD204' 'CB201' TO 'CB204' -
{ 1772} >_'CC201' TO 'CC204' 'CD201' TO 'CD204' -
{ 1773} >_
{ 1774} >_'AA301' TO 'AA304' 'AB301' TO 'AB304' 'AC301' TO 'AC304' 'AE301' TO 'AE304' -
{ 1775} >_'AG301' TO 'AG304' 'AH301' TO 'AH304' 'AJ301' TO 'AJ304' 'AA401' TO 'AA404' -
{ 1776} >_'AB401' TO 'AB404' 'AC401' TO 'AC404' 'AE401' TO 'AE404' 'AG401' TO 'AG404' -
{ 1777} >_'AH401' TO 'AH404' 'AJ401' TO 'AJ404' 'BA301' TO 'BA304' 'BB301' TO 'BB304' -
{ 1778} >_'BC301' TO 'BC304' 'BD301' TO 'BD304' 'BA401' TO 'BA404' 'BB401' TO 'BB404' -
{ 1779} >_'BC401' TO 'BC404' 'BD401' TO 'BD404' 'CB301' TO 'CB304' 'CC301' TO 'CC304' -
{ 1780} >_'CD301' TO 'CD304' 'CB401' TO 'CB404' 'CC401' TO 'CC404' 'CD401' TO 'CD404' -
{ 1781} >_
{ 1782} >_'BE101' TO 'BE104' 'BF101' TO 'BF104' 'BG101' TO 'BG104' 'BH101' TO 'BH104' -
{ 1783} >_'BJ101' TO 'BJ104' 'CE101' TO 'CE104' 'CF101' TO 'CF104' 'CG101' TO 'CG104' -
{ 1784} >_'CH101' TO 'CH104' 'BE401' TO 'BE404' 'BF401' TO 'BF404' 'BG401' TO 'BG404' -
{ 1785} >_'BH401' TO 'BH404' 'BJ401' TO 'BJ404' 'CE401' TO 'CE404' 'CF401' TO 'CF404' -
{ 1786} >_'CG401' TO 'CG404' 'CH401' TO 'CH404' -
{ 1787} >_
{ 1788} >_'BE201' TO 'BE204' 'BF201' TO 'BF204' 'BG201' TO 'BG204' 'BH201' TO 'BH204' -
{ 1789} >_'BJ201' TO 'BJ204' 'CE201' TO 'CE204' 'CF201' TO 'CF204' 'CG201' TO 'CG204' -
{ 1790} >_'CH201' TO 'CH204' 'BE301' TO 'BE304' 'BF301' TO 'BF304' 'BG301' TO 'BG304' -
{ 1791} >_'BH301' TO 'BH304' 'BJ301' TO 'BJ304' 'CE301' TO 'CE304' 'CF301' TO 'CF304' -
{ 1792} >_'CG301' TO 'CG304' 'CH301' TO 'CH304'
{ 1793} >
{ 1794} > DEFINE GROUP 'TCPA'        GROUPS 'TCPLAT' 'TCPLAT1' 'TCPLAT2'
{ 1795} > DEFINE GROUP 'CODEBEAM'    GROUPS 'PCHAN' 'PLATE1' 'PLATE2' 'PLATE3' 'TCPA'
{ 1796} > DEFINE GROUP 'CODECOL'     GROUPS 'BEAM' 'TS' 'HEX' 'WEB'
{ 1797} > DEFINE GROUP 'CODEMEM'     GROUPS 'CODEBEAM' 'CODECOL'
{ 1798} > DEFINE GROUP 'WEIGHT'      GROUPS 'PCHAN' 'PLATE1' 'PLATE2' 'PLATE3' 'TCPA' 'BEAM' 'TS' 'HEX'
{ 1799} > DEFINE GROUP 'RECT'        GROUPS 'PLATE1' 'PLATE2' 'PLATE3' 'WEB' 'TCPA'
{ 1800} > DEFINE GROUP 'REACMEM'     GROUPS 'BEAM' 'PCHAN' 'TS' 'PLATE1' 'PLATE2' 'PLATE3' 'TCPLAT' -
{ 1801} >_                                  'TCPLAT1' 'TCPLAT2' 'HEX' 'RGS' 'RIGD' 'WEB' 'STNRD6F' 'STNRD7'
{ 1802} > $
{ 1803} > $============================== DEFINE GROUPS FOR VIEWING====================================
{ 1804} > $
{ 1805} > DEFINE GROUP 'STR'         GROUPS 'STNRD6F' 'STNRD7' 'MODULE' 'SRGD' 'RGS'
```

```
{ 1806} > DEFINE GROUP 'TCP'          GROUPS 'TCPLAT' 'TCPLAT1'
{ 1807} > DEFINE GROUP 'LD'           GROUPS 'PLATE1' 'PLATE2'
{ 1808} > DEFINE GROUP 'NOSTR'        GROUPS 'BEAM' 'PCHAN' 'TS' 'PLATE1' 'PLATE2' 'PLATE3' 'TCPLAT' 'TCPLAT1' 'TCPLAT2' -
{ 1809} >_                            'HEX' 'RIGD' 'SRGD'
{ 1810} > DEFINE GROUP 'NOTOP'        GROUPS 'BEAM' 'PCHAN' 'TS' 'PLATE1' 'PLATE2' 'PLATE3' -
{ 1811} >_                            'RIGD'
{ 1812} > DEFINE GROUP 'BOX'          GROUPS 'BEAM' 'PCHAN' 'TS' 'RIGD' 'WEB' 'PLATE3'
{ 1813} > DEFINE GROUP 'ALLBUT'       GROUPS 'BEAM' 'PCHAN' 'TS' 'PLATE1' 'PLATE2' 'PLATE3' 'TCPLAT' 'TCPLAT1' 'TCPLAT2' -
{ 1814} >_                            'HEX' 'RIGD' 'WEB' 'SRGD' 'RGS'
{ 1815} > DEFINE GROUP 'NOWEB'        GROUPS 'BEAM' 'PCHAN' 'TS' 'PLATE1' 'PLATE2' 'PLATE3' 'TCPLAT' 'TCPLAT1' 'TCPLAT2' -
{ 1816} >_                            'HEX' 'RIGD' 'SRGD' 'RGS' 'STR'
{ 1817} >
{ 1818} > $
{ 1819} > $==========================================================================================
{ 1820} >
{ 1821} > MEMBER ECCENTRICITIES
{ 1822} > 'TCPL1' 'TCPL5' 'TCPL9' 'TCPL15' 'TCPL20' 'TCPL24' 'TCPL28'          GLOBAL START X  5.0  END X  5.0
{ 1823} > 'TCPL32' TO 'TCPL92' BY 4                                            GLOBAL START X  5.0  END X  5.0
{ 1824} > 'TCPL3' 'TCPL7' 'TCPL11' 'TCPL17' 'TCPL22' TO 'TCPL94' BY 4          GLOBAL START Z -5.0  END Z -5.0
{ 1825} > 'TCPL4' TO 'TCPL12' BY 4 'TCPL18'                                    GLOBAL START Z  5.0  END Z  5.0
{ 1826} > 'TCPL23' TO 'TCPL31' BY 4 'TCPL35' TO 'TCPL95' BY 4                  GLOBAL START Z  5.0  END Z  5.0
{ 1827} > 'TCPL2' 'TCPL6' 'TCPL10' 'TCPL16' 'TCPL21' TO 'TCPL93' BY 4          GLOBAL START X -5.0  END X -5.0
{ 1828} > 'TCPL126' 'TCPL128' 'TCPL130'                                        GLOBAL START Z -6.375 END Z -6.375
{ 1829} > 'TCPL127' 'TCPL129' 'TCPL131'                                        GLOBAL START Z  6.375 END Z  6.375
{ 1830} > 'TCPL97' TO 'TCPL123' BY 2                                           GLOBAL START X -5.0  END X -5.0
{ 1831} > 'TCPL96' TO 'TCPL122' BY 2                                           GLOBAL START X  5.0  END X  5.0
{ 1832} >
{ 1833} > 'PLATE3' 'PLATE33' 'PLATE37' 'PLATE7' TO 'PLATE19' BY 4 'PLATE22' TO 'PLATE30' -
{ 1834} >_          BY 4 GLOBAL START Z  8.0 END Z  8.0
{ 1835} > 'PLATE1' 'PLATE4' TO 'PLATE16' BY 4 'PLATE23' TO 'PLATE31' BY 4 'PLATE34' -
{ 1836} >_          GLOBAL START Z -8.0 END Z -8.0
{ 1837} >
{ 1838} > $*************************************************************************
{ 1839} > MATERIAL STEEL
{ 1840} > CONSTANTS
{ 1841} > E 27650000      MEM ALL
{ 1842} > G 10600000      MEM ALL
{ 1843} > CTE 3.27E-6     MEM ALL
{ 1844} > DENSITY 0.290   MEM ALL
{ 1845} > DENSITY 0.336   GROUP 'PLATE1' GROUP 'PLATE2'
{ 1846} > DENSITY 0.218   GROUP 'TCPA'
{ 1847} > POISSON 0.305   MEM ALL
{ 1848} > DENSITY 0.0000001 GROUP 'MODULE' GROUP 'STNRD6F' GROUP 'STNRD7' GROUP 'LINKS'
{ 1849} > BETA  90.0 'PLATE1' TO 'PLATE16' 'PLATE18' 'PLATE19' 'PLATE21' TO 'PLATE37' -
{ 1850} >_           'TCPL1' TO 'TCPL18' 'TCPL20' TO 'TCPL131'
{ 1851} > BETA 180.0 'PCHAN1' TO 'PCHAN13' 'PCHAN15' 'PCHAN19' 'PCHAN29'
{ 1852} > BETA  45.0 'TS1' TO 'TS19'
{ 1853} > BETA 90 GROUP 'WEB'
{ 1854} > $
{ 1855} > $================================DEFINE MEMBER PROPERTIES==========================
{ 1856} > MEMBER PROPERTIES
{ 1857} > GROUP 'BEAM'  TABLE 'STEEL78' 'W6X15'
{ 1858} > GROUP 'TS' TABLE 'TUBE80' 'TS3X3X5'
{ 1859} > GROUP 'PCHAN'   TABLE 'MYCHAN' 'C12X325'
{ 1860} > GROUP 'PLATE1'  TABLE 'RBARS'  'B1600008'
{ 1861} > GROUP 'PLATE2'  TABLE 'RBARS'  'B3200008'
{ 1862} > GROUP 'PLATE3'  TABLE 'RBAR'   'B0900012'
{ 1863} > GROUP 'TCPLAT'  TABLE 'RBARS'  'B1304008'
{ 1864} > GROUP 'TCPLAT1' TABLE 'RBARS'  'B1304008'
{ 1865} > GROUP 'TCPLAT2' TABLE 'RBARS'  'B1600008'
{ 1866} > GROUP 'HEX'  PIPE OD 1.15625 ID 0.5
{ 1867} > GROUP 'RIGWE2' TABLE 'MYW' 'W1600003'
{ 1868} > GROUP 'RIGWI2' TABLE 'MYW' 'W3200003'
{ 1869} > GROUP 'RIGWE4' TABLE 'MYW' 'W1600003'
{ 1870} > GROUP 'RIGWI4' TABLE 'MYW' 'W3200003'
{ 1871} > GROUP 'RIGWES' TABLE 'MYW' 'W1100003'
{ 1872} > GROUP 'MODULE' GROUP 'RIGD' GROUP 'SRGD' AX 100. AY 100. AZ 100. IX 1000. IY 1000. IZ 1000.
{ 1873} > GROUP 'RGS' AX 5. AY 5. AZ 5. IX 100. IY 100. IZ 100.
{ 1874} > GROUP 'SRGD2' AX 6. AY 4.24 AZ 4.24 IX 1000. IY 1000. IZ 1000.
{ 1875} > $
{ 1876} > UNITS RADIANS
{ 1877} >
{ 1878} > MEMBER PROPERTIES
{ 1879} > GROUP 'STNRD7P' STIFFNESS MATRIX COLUMN 1 2 3 4 5 6
{ 1880} >   ROW 1  1.75E4   0.       0.       0.       0.       0.
{ 1881} >   ROW 2  0.       9.18E3   0.       0.       0.      -4.20E4
{ 1882} >   ROW 3  0.       0.       9.18E3   0.       4.20E4   0.
{ 1883} >   ROW 4  0.       0.       0.       1.14E6   0.       0.
{ 1884} >   ROW 5  0.       0.       4.20E4   0.       5.27E6   0.
{ 1885} >   ROW 6  0.      -4.20E4   0.       0.       0.       5.27E6
{ 1886} >
{ 1887} > MEMBER PROPERTIES
{ 1888} > GROUP 'STNRD6F' STIFFNESS MATRIX COLUMN 1 2 3 4 5 6
{ 1889} >   ROW 1  2.1E4    0.       0.       0.       0.       0.
{ 1890} >   ROW 2  0.       1.11E4   0.       0.       0.      -1.10E5
{ 1891} >   ROW 3  0.       0.       1.11E4   0.       1.10E5   0.
{ 1892} >   ROW 4  0.       0.       0.       1.76E6   0.       0.
{ 1893} >   ROW 5  0.       0.       1.10E5   0.       1.28E7   0.
{ 1894} >   ROW 6  0.     -1.10E5    0.       0.       0.       1.28E7
{ 1895} >
{ 1896} > MEMBER PROPERTIES
{ 1897} > GROUP 'STNRD7F' STIFFNESS MATRIX COLUMN 1 2 3 4 5 6
{ 1898} >   ROW 1  2.1E4    0.       0.       0.       0.       0.
{ 1899} >   ROW 2  0.       9.74E3   0.       0.       0.      -1.08E5
{ 1900} >   ROW 3  0.       0.       9.74E3   0.       1.08E5   0.
{ 1901} >   ROW 4  0.       0.       0.       1.75E6   0.       0.
```

```
{ 1902} >   ROW 5  0.       0.       1.08E5   0.       1.42E7     0.
{ 1903} >   ROW 6  0.      -1.08E5   0.       0.       0.        1.42E7
{ 1904} >
{ 1905} > $==============================================================================
{ 1906} > MEMBER RELEASES
{ 1907} > 'HEX1' TO 'HEX92'   END MOM X Y Z
{ 1908} > 'PCHAN2' 'PCHAN13' 'PCHAN14' 'PCHAN19' 'PCHAN20' 'PCHAN25' 'PCHAN28' END MOM  Y Z
{ 1909} > 'PCHAN15' 'PCHAN16' 'PCHAN21' 'PCHAN23' STA MOM  Y Z
{ 1910} > 'PCHAN11' STA MOM  Y Z
{ 1911} > 'PCHAN6' STA MOM Y
{ 1912} > 'PCHAN8' END MOM Y
{ 1913} > GROUP 'RIGWI2' END ELA KMY 1.6E6
{ 1914} > GROUP 'RIGWI4' END ELA KMY 2.3E6
{ 1915} > GROUP 'RIGWE2' END ELA KMY 1.2E6
{ 1916} > GROUP 'RIGWE4' END ELA KMY 1.9E6
{ 1917} > GROUP 'PLATE1' GROUP 'PLATE2' STA MOM Y END MOM Y
{ 1918} > 'PLATE38' 'PLATE40' STA MOM Y Z
{ 1919} > 'PLATE39' 'PLATE41' END MOM Y Z
{ 1920} > GROUP 'RIGCBX'  STA MOM Y
{ 1921} > GROUP 'RIGCBZ'  STA MOM Z
{ 1922} > GROUP 'RIGCBC'  STA MOM Y Z
{ 1923} > 'TCPL13' 'TCPL14' 'TCPL124' 'TCPL125' STA MOM Y END MOM Y
{ 1924} > $
{ 1925} > $==============================================================================
{ 1926} > JOINT RELEASES
{ 1927} > $
{ 1928} > 'TC27' TO 'TC29' FOR X Z MOM X Y Z
{ 1929} > 'WA1' TO 'WA5' 'WA10' TO 'WA16' 'WA21' TO 'WA22' -
{ 1930} > 'WA35' TO 'WA38' 'WA43' FOR X Z MOM X Y
{ 1931} > 'WA23' TO 'WA27' 'WA32' 'WA33' FOR X MOM X Y
{ 1932} > 'WA28' TO 'WA31' MOM X Y
{ 1933} > 'WA7' TO 'WA9' 'WA18' TO 'WA20' 'WA39' TO 'WA42' FOR Z MOM X Y
{ 1934} > $
{ 1935} > $==============================================================================
{ 1936} > UNITS DEGREES
{ 1937} > PRINT MEM PROP MEM 'PCHAN1' 'PLATE1' 'PLATE2' 'TCPL1' 'TCPL96' 'TCPL13' 'HEX1' 'RIGD1' 'RIGD2'
1
 ****************************************
 *  PROBLEM DATA FROM INTERNAL STORAGE  *
 ****************************************


 JOB ID - NONE          JOB TITLE - NONE GIVEN

 ACTIVE UNITS -  LENGTH        WEIGHT        ANGLE       TEMPERATURE      TIME
                   INCH          LB            DEG           DEGF           SEC


 MEMBER PROPERTIES-----------------------------------------------------------------------------------------------------/
 MEMBER/SEG TYPE       SEG.L              AX        AY        AZ        IX        IY        IZ        SY        SZ
                                          YD        ZD        YC        ZC        EY        EZ
                                          ID        OD      TH-PIPE     SC

 PCHAN1   TABLE     MYCHAN   C12X325      4.375     3.000     1.000     0.091     3.004    83.466     1.250    13.911
                                         12.000     3.000     6.000     0.596     0.000     1.326

 PLATE1   TABLE     RBARS    B1600008     8.000     5.333     5.333     0.654     0.167   170.667     0.667    21.333
                                         16.000     0.500     8.000     0.250     0.000     0.000

 PLATE2   TABLE     RBARS    B3200008    16.000    10.667    10.667     1.320     0.333  1365.333     1.333    85.333
                                         32.000     0.500    16.000     0.250     0.000     0.000

 TCPL1    TABLE     RBARS    B1304008     6.625     4.417     4.417     0.539     0.138    96.925     0.552    14.630
                                         13.250     0.500     6.625     0.250     0.000     0.000

 TCPL96   TABLE     RBARS    B1304008     6.625     4.417     4.417     0.539     0.138    96.925     0.552    14.630
                                         13.250     0.500     6.625     0.250     0.000     0.000

 TCPL13   TABLE     RBARS    B1600008     8.000     5.333     5.333     0.654     0.167   170.667     0.667    21.333
                                         16.000     0.500     8.000     0.250     0.000     0.000

 HEX1     PRISMATIC    PIPE               0.854     0.530     0.530     0.169     0.085     0.085     0.146     0.146
                                          1.156     1.156     0.578     0.578     0.000     0.000
                                          0.500     1.156     0.328     0.000

 RIGD1    TABLE     MYW      W1600003     3.680     3.680     1.840    33.136     0.016    78.507     0.141     9.813
                                         16.000     0.230     8.000     0.115     0.000     0.000

 RIGD2    TABLE     MYW      W3200003     7.360     7.360     1.840    33.201     0.032   628.053     0.282    39.253
                                         32.000     0.230    16.000     0.115     0.000     0.000


 ****************************************
 *  END OF DATA FROM  INTERNAL STORAGE  *
 ****************************************
1
{ 1938} > $
{ 1939} > $==========================DEFINE STATIC LOADING==========================================
{ 1940} > $
{ 1941} > DEAD LOADING 'XSTEEL' DIR  X FACTOR 1.0  GROUP 'WEIGHT'
{ 1942} > DEAD LOADING 'YSTEEL' DIR -Y FACTOR 1.0  GROUP 'WEIGHT'
{ 1943} > DEAD LOADING 'ZSTEEL' DIR  Z FACTOR 1.0  GROUP 'WEIGHT'
{ 1944} > $
{ 1945} > LOADING 'YMODULE'
{ 1946} > JOINT LOADS
```

```
{ 1947} > 'AA1' 'AB1' 'AC1' 'AE1' 'AG1' 'AH1' 'AJ1'              FORCE Y -826.0
{ 1948} > 'BA1' 'BB1' 'BC1' 'BD1' 'CB1' 'CC1' 'CD1'              FORCE Y -826.0
{ 1949} > 'BE1' 'BF1' 'BG1' 'BH1' 'BJ1' 'CE1' 'CF1' 'CG1' 'CH1'  FORCE Y -685.0
{ 1950} >
{ 1951} > LOADING 'PRESSURE'
{ 1952} > MEMBER LOADS
{ 1953} > 'PCHAN1' TO 'PCHAN5' 'PCHAN9' TO 'PCHAN12' FOR Z GLOBAL UNI W -18.2
{ 1954} > 'PCHAN13' 'PCHAN15' 'PCHAN19'              FOR X GLOBAL UNI W  18.2
{ 1955} > 'PCHAN14' 'PCHAN16' 'PCHAN20'              FOR X GLOBAL UNI W -18.2
{ 1956} > 'PCHAN17' 'PCHAN18' 'PCHAN21' TO 'PCHAN28' FOR Z GLOBAL UNI W  18.2
{ 1957} > 'PCHAN6' TO 'PCHAN8'                       FOR Z        UNI W  18.2
{ 1958} > 'PCHAN6' TO 'PCHAN8'                       FOR Y GLOBAL UNI W -24.0
{ 1959} > GROUP 'TCPLAT' GROUP 'TCPLAT1'             FOR Y GLOBAL UNI W -20.1
{ 1960} > GROUP 'TCPLAT2'                            FOR Y GLOBAL UNI W -24.3
{ 1961} > GROUP 'PLATE1'                             FOR Y GLOBAL UNI W  24.3
{ 1962} > GROUP 'PLATE2'                             FOR Y GLOBAL UNI W  48.5
{ 1963} >
{ 1964} > JOINT LOADS
{ 1965} > 'AA1' 'AB1' 'AC1' 'AE1' 'AG1' 'AH1' 'AJ1'              FORCE Y -46.0
{ 1966} > 'BA1' 'BB1' 'BC1' 'BD1' 'CB1' 'CC1' 'CD1'              FORCE Y -46.0
{ 1967} > 'BE1' 'BF1' 'BG1' 'BH1' 'BJ1' 'CE1' 'CF1' 'CG1' 'CH1'  FORCE Y -46.0
{ 1968} >
{ 1969} > LOADING 'DEB'
{ 1970} > JOINT LOADS
{ 1971} > 'AA5' 'AB5' 'AC5' 'AE5' 'AG5' 'AH5' 'AJ5'              FORCE Y -1080.0
{ 1972} > 'BA5' 'BB5' 'BC5' 'BD5' 'CB5' 'CC5' 'CD5'              FORCE Y -909.0
{ 1973} > 'BE4' 'BF4' 'BG4' 'BH4' 'BJ4' 'CE4' 'CF4' 'CG4' 'CH4'  FORCE Y -909.0
{ 1974} > $
{ 1975} > INACTIVE MEM GROUP 'STNRD6F' GROUP 'STNRD7'
{ 1976} > $
{ 1977} > LOADING 'TOL'
{ 1978} > MEMBER TEMPERATURE LOADS
{ 1979} > EXIS ACT AXIAL 70.0
{ 1980} > $
{ 1981} > CONSTANTS
{ 1982} > CTE 6.02E-6    MEM ALL
{ 1983} > LOADING 'TAL'
{ 1984} > MEMBER TEMPERATURE LOADS
{ 1985} > EXIS ACT AXIAL 120.0
{ 1986} > $
{ 1987} > LOADING 'STIFFX'
{ 1988} > JOINT LOADS
{ 1989} > 'AA1' 'AB1' 'AC1' 'AE1' 'AG1' 'AH1' 'AJ1' 'BA1' 'BB1' 'BC1' 'BD1' 'CB1' 'CC1' 'CD1' -
{ 1990} >_'BE1' 'BF1' 'BG1' 'BH1' 'BJ1' 'CE1' 'CF1' 'CG1' 'CH1'  FORCE X 1000.0
{ 1991} > $
{ 1992} > LOADING 'STIFFZ'
{ 1993} > JOINT LOADS
{ 1994} > 'AA1' 'AB1' 'AC1' 'AE1' 'AG1' 'AH1' 'AJ1' 'BA1' 'BB1' 'BC1' 'BD1' 'CB1' 'CC1' 'CD1' -
{ 1995} >_'BE1' 'BF1' 'BG1' 'BH1' 'BJ1' 'CE1' 'CF1' 'CG1' 'CH1'  FORCE Z 1000.0
{ 1996} > $
{ 1997} > LOADING 'BEY'
{ 1998} > JOINT LOADS
{ 1999} > 'BE1' FORCE Y -1000.0
{ 2000} > $
{ 2001} > LOADING 'AEY'
{ 2002} > JOINT LOADS
{ 2003} > 'BE1' FORCE Y -1000.0
{ 2004} > $
{ 2005} > LOADING 'AEY1'
{ 2006} > JOINT LOADS
{ 2007} > 'SR7' FORCE Y -250.0
{ 2008} > $
{ 2009} > LOADING 'AEY2'
{ 2010} > JOINT LOADS
{ 2011} > 'SR8' FORCE Y -250.0
{ 2012} > $
{ 2013} > LOADING 'AEY3'
{ 2014} > JOINT LOADS
{ 2015} > 'SR21' FORCE Y -250.0
{ 2016} > $
{ 2017} > LOADING 'AEY4'
{ 2018} > JOINT LOADS
{ 2019} > 'SR22' FORCE Y -250.0
{ 2020} > ACTIVE MEM ALL
{ 2021} > $
{ 2022} > OUTPUT BY LOADING
{ 2023} > OUTPUT WAR MES LIM 1
{ 2024} > $
{ 2025} > LOAD LIST 'XSTEEL' 'YSTEEL' 'ZSTEEL' 'YMODULE' 'PRESSURE' 'TOL' 'TAL' 'STIFFX' 'STIFFZ' -
{ 2026} >_ 'BEY' 'AEY' 'AEY1' 'AEY2' 'AEY3' 'AEY4' 'DEB'
{ 2027} > STIFFNESS ANALYSIS


BANDWIDTH INFORMATION BEFORE RENUMBERING.


THE MAXIMUM BANDWIDTH IS  549 AND OCCURS AT JOINT CH1
THE AVERAGE BANDWIDTH IS                          76.320
THE STANDARD DEVIATION OF THE BANDWIDTH IS       105.651
                                              ----------
                                                 181.971
                                              ==========
```

```
BANDWIDTH INFORMATION AFTER  RENUMBERING.


THE MAXIMUM BANDWIDTH IS   98 AND OCCURS AT JOINT TP10
THE AVERAGE BANDWIDTH IS                        33.261
THE STANDARD DEVIATION OF THE BANDWIDTH IS      35.370
                                            ----------
                                                68.630
                                            ==========
TIME FOR CONSISTENCY CHECKS FOR   1340 MEMBERS      0.10 SECONDS
TIME FOR BANDWIDTH REDUCTION                        0.08 SECONDS
TIME TO GENERATE   1340 ELEMENT STIF. MATRICES      0.16 SECONDS
TIME TO PROCESS    175 MEMBER RELEASES              0.04 SECONDS
TIME TO PROCESS     3721 MEMBER LOADS               0.25 SECONDS
TIME TO PROCESS     78 LINEAR CONNECTIONS           0.00 SECONDS
TIME TO ASSEMBLE THE STIFFNESS MATRIX               0.32 SECONDS
TIME TO PROCESS   1186 JOINTS                       0.11 SECONDS
TIME TO SOLVE WITH  198 PARTITIONS                  3.56 SECONDS
TIME TO PROCESS   1186 JOINT DISPLACEMENTS          0.42 SECONDS
TIME TO PROCESS   1340 ELEMENT DISTORTIONS          0.77 SECONDS
TIME FOR STATICS CHECK                              0.06 SECONDS
{ 2028} > OUTPUT DECIMAL 6
{ 2029} > OUTPUT BY JOINT
{ 2030} > LOAD LIST 'STIFFX' 'STIFFZ' 'BEY' 'AEY' 'AEY1' 'AEY2' 'AEY3' 'AEY4'
{ 2031} > LIST DISPL JOINTS 'AA1' 'AB1' 'AC1' 'AE1' 'AG1' 'AH1' 'AJ1' 'BA1' 'BB1' 'BC1' 'BD1' 'CB1' 'CC1' 'CD1' -
{ 2032} > 'BE1' 'BF1' 'BG1' 'BH1' 'BJ1' 'CE1' 'CF1' 'CG1' 'CH1' 'SR7' 'SR8' 'SR21' 'SR22'
1

   ****************************
   *RESULTS OF LATEST ANALYSES*
   ****************************


    PROBLEM - NONE      TITLE - NONE GIVEN


    ACTIVE UNITS  INCH LB   DEG  DEGF SEC



    RESULTANT JOINT DISPLACEMENTS SUPPORTS

JOINT            LOADING      /-----------------DISPLACEMENT-----------------//-------------------ROTATION-------------------/
                                  X DISP.         Y DISP.         Z DISP.         X ROT.          Y ROT.          Z ROT.


    RESULTANT JOINT DISPLACEMENTS FREE JOINTS

JOINT            LOADING      /-----------------DISPLACEMENT-----------------//-------------------ROTATION-------------------/
                                  X DISP.         Y DISP.         Z DISP.         X ROT.          Y ROT.          Z ROT.
AA1       GLOBAL
                 STIFFX          0.072682        0.000141        0.000299        0.000452        0.000408        0.000051
                 STIFFZ         -0.000992       -0.000056        0.004522       -0.001642       -0.002108       -0.000171
                 BEY             0.000003        0.000002        0.000001        0.000006        0.000000        0.000000
                 AEY             0.000003        0.000002        0.000001        0.000006        0.000000        0.000000
                 AEY1            0.000001        0.000000       -0.000006        0.000001        0.000003        0.000000
                 AEY2           -0.000006        0.000000       -0.000002       -0.000001       -0.000006        0.000000
                 AEY3            0.000002        0.000002        0.000007        0.000005       -0.000005        0.000000
                 AEY4           -0.000006        0.000001        0.000006        0.000000       -0.000009        0.000000
AB1       GLOBAL
                 STIFFX          0.072637        0.000009        0.000070        0.000023        0.000286        0.000582
                 STIFFZ         -0.000878       -0.000056        0.005732       -0.002646       -0.001662       -0.000232
                 BEY             0.000003        0.000000        0.000002       -0.000001        0.000000        0.000006
                 AEY             0.000003        0.000000        0.000002       -0.000001        0.000000        0.000006
                 AEY1            0.000001        0.000000       -0.000008        0.000003        0.000003        0.000000
                 AEY2           -0.000006        0.000000        0.000001       -0.000001       -0.000006        0.000000
                 AEY3            0.000002        0.000000        0.000009       -0.000004       -0.000004        0.000007
                 AEY4           -0.000005        0.000000        0.000010       -0.000004       -0.000009        0.000002
AC1       GLOBAL
                 STIFFX          0.072552       -0.000005       -0.000064       -0.000014        0.000179        0.000524
                 STIFFZ         -0.000728       -0.000058        0.006601       -0.003143       -0.001144       -0.000115
                 BEY             0.000004        0.000000        0.000002        0.000001        0.000001        0.000008
                 AEY             0.000004        0.000000        0.000002        0.000001        0.000001        0.000008
                 AEY1            0.000001        0.000000       -0.000010        0.000008        0.000005        0.000000
                 AEY2           -0.000006        0.000000        0.000003       -0.000002       -0.000006        0.000000
                 AEY3            0.000003        0.000000        0.000011       -0.000009       -0.000006        0.000007
                 AEY4           -0.000005        0.000000        0.000014       -0.000010       -0.000011        0.000003
AE1       GLOBAL
                 STIFFX          0.072145        0.000010       -0.000190       -0.000179        0.000464        0.000509
                 STIFFZ         -0.000125       -0.000358        0.007249       -0.002395        0.000008       -0.001267
                 BEY             0.000021       -0.000169       -0.000024       -0.000607        0.000048       -0.000509
                 AEY             0.000021       -0.000169       -0.000024       -0.000607        0.000048       -0.000509
                 AEY1           -0.000001       -0.000001       -0.000015        0.000049        0.000000        0.000032
                 AEY2            0.000000       -0.000037        0.000006        0.000067        0.000013       -0.000151
                 AEY3            0.000008       -0.000039        0.000019       -0.000176        0.000000        0.000043
                 AEY4           -0.000007       -0.000193        0.000030       -0.000712       -0.000016       -0.000679
AG1       GLOBAL
                 STIFFX          0.072305       -0.000790       -0.000345       -0.002715       -0.001017       -0.000460
                 STIFFZ          0.000713       -0.000074        0.005838       -0.003012        0.001042       -0.000128
                 BEY             0.000006       -0.000004        0.000003       -0.000016        0.000000        0.000012
                 AEY             0.000006       -0.000004        0.000003       -0.000016        0.000000        0.000012
                 AEY1           -0.000002        0.000000       -0.000006        0.000004       -0.000003        0.000000
                 AEY2            0.000004        0.000000        0.000001       -0.000002        0.000005        0.000001
```

		AEY3	0.000003	-0.000001	0.000006	-0.000005	0.000003	0.000001
		AEY4	0.000001	-0.000002	0.000009	-0.000011	0.000006	0.000007
AH1	GLOBAL							
		STIFFX	0.072307	0.001059	-0.000153	0.004088	-0.001060	0.000640
		STIFFZ	0.000806	0.000002	0.004821	-0.002055	0.001723	0.000046
		BEY	0.000006	0.000000	0.000001	0.000001	0.000002	0.000000
		AEY	0.000006	0.000000	0.000001	0.000001	0.000002	0.000000
		AEY1	-0.000002	0.000000	-0.000004	0.000002	-0.000004	0.000000
		AEY2	0.000003	0.000000	0.000000	0.000001	0.000004	0.000000
		AEY3	0.000003	0.000000	0.000004	-0.000001	0.000003	0.000000
		AEY4	0.000001	0.000000	0.000005	-0.000003	0.000006	0.000000
AJ1	GLOBAL							
		STIFFX	0.072260	-0.001146	-0.000134	-0.004317	-0.001001	0.000273
		STIFFZ	0.000902	-0.000055	0.003661	-0.001401	0.002106	0.000138
		BEY	0.000006	0.000000	0.000000	-0.000002	0.000002	0.000000
		AEY	0.000006	0.000000	0.000000	-0.000002	0.000002	0.000000
		AEY1	-0.000002	0.000000	-0.000002	0.000001	-0.000003	0.000000
		AEY2	0.000003	0.000000	-0.000002	0.000000	0.000004	0.000000
		AEY3	0.000003	0.000000	0.000002	-0.000002	0.000003	0.000000
		AEY4	0.000001	0.000000	0.000002	0.000000	0.000006	0.000000
BA1	GLOBAL							
		STIFFX	0.072271	0.000215	0.000291	-0.000220	0.001013	0.000027
		STIFFZ	-0.000138	-0.000031	0.004552	-0.001529	-0.001929	0.000125
		BEY	0.000003	0.000002	0.000001	-0.000007	0.000001	0.000001
		AEY	0.000003	0.000002	0.000001	-0.000007	0.000001	0.000001
		AEY1	0.000000	0.000000	-0.000006	0.000002	0.000002	0.000000
		AEY2	-0.000003	0.000000	-0.000002	0.000001	-0.000006	0.000000
		AEY3	0.000003	0.000002	0.000007	-0.000009	-0.000002	0.000000
		AEY4	-0.000002	0.000001	0.000006	-0.000004	-0.000007	0.000000
BB1	GLOBAL							
		STIFFX	0.072367	0.000006	0.000036	0.000044	0.000504	0.001147
		STIFFZ	-0.000257	0.000003	0.005736	-0.002793	-0.001516	-0.000138
		BEY	0.000003	0.000000	0.000002	-0.000001	0.000000	0.000007
		AEY	0.000003	0.000000	0.000002	-0.000001	0.000000	0.000007
		AEY1	0.000000	0.000000	-0.000008	0.000004	0.000002	-0.000001
		AEY2	-0.000003	0.000000	0.000001	-0.000001	-0.000005	-0.000001
		AEY3	0.000003	0.000000	0.000009	-0.000005	-0.000002	0.000008
		AEY4	-0.000001	0.000000	0.000011	-0.000005	-0.000006	0.000003
BC1	GLOBAL							
		STIFFX	0.072406	-0.000003	-0.000105	0.000063	0.000303	0.001215
		STIFFZ	-0.000284	0.000006	0.006638	-0.003364	-0.001048	-0.000154
		BEY	0.000003	0.000000	0.000002	0.000001	0.000000	0.000007
		AEY	0.000003	0.000000	0.000002	0.000001	0.000000	0.000007
		AEY1	0.000000	0.000000	-0.000009	0.000007	0.000002	-0.000002
		AEY2	-0.000003	0.000000	0.000004	-0.000002	-0.000004	-0.000001
		AEY3	0.000004	0.000001	0.000011	-0.000009	-0.000002	0.000011
		AEY4	-0.000001	0.000000	0.000015	-0.000010	-0.000006	0.000005
BD1	GLOBAL							
		STIFFX	0.072291	0.000025	-0.000228	-0.000260	0.000064	0.001308
		STIFFZ	-0.000209	-0.000028	0.007210	-0.003553	-0.000476	-0.000155
		BEY	0.000005	-0.000037	0.000002	0.000011	0.000002	-0.000132
		AEY	0.000005	-0.000037	0.000002	0.000011	0.000002	-0.000132
		AEY1	-0.000001	-0.000002	-0.000012	0.000013	0.000003	-0.000005
		AEY2	-0.000002	-0.000001	0.000006	0.000001	-0.000002	-0.000003
		AEY3	0.000009	0.000000	0.000016	-0.000014	0.000000	0.000011
		AEY4	0.000003	-0.000001	0.000020	0.000001	-0.000007	-0.000002
CB1	GLOBAL							
		STIFFX	0.072099	0.000011	0.000132	-0.000083	0.000307	0.000682
		STIFFZ	0.000277	0.000066	0.005554	-0.002227	-0.002098	0.000100
		BEY	0.000004	0.000000	0.000001	-0.000001	-0.000003	0.000001
		AEY	0.000004	0.000000	0.000001	-0.000001	-0.000003	0.000001
		AEY1	-0.000001	0.000000	-0.000007	0.000003	0.000003	-0.000001
		AEY2	-0.000001	0.000000	0.000001	-0.000001	-0.000004	0.000000
		AEY3	0.000004	0.000000	0.000009	-0.000004	-0.000003	0.000002
		AEY4	0.000001	0.000000	0.000011	-0.000005	-0.000006	0.000001
CC1	GLOBAL							
		STIFFX	0.072152	0.000006	-0.000080	0.000026	0.000455	0.000692
		STIFFZ	0.000174	0.000054	0.006622	-0.003210	-0.001180	0.000056
		BEY	0.000004	0.000000	0.000003	0.000000	-0.000005	0.000002
		AEY	0.000004	0.000000	0.000003	0.000000	-0.000005	0.000002
		AEY1	-0.000001	0.000000	-0.000009	0.000006	0.000002	-0.000001
		AEY2	-0.000001	0.000000	0.000004	-0.000002	-0.000004	0.000000
		AEY3	0.000004	0.000001	0.000011	-0.000008	-0.000001	0.000003
		AEY4	0.000001	0.000000	0.000015	-0.000009	-0.000004	0.000002
CD1	GLOBAL							
		STIFFX	0.072139	-0.000029	-0.000233	0.000252	0.000386	0.000696
		STIFFZ	-0.000016	0.000043	0.007194	-0.003500	-0.000500	0.000036
		BEY	0.000009	-0.000007	0.000009	0.000034	-0.000006	-0.000024
		AEY	0.000009	-0.000007	0.000009	0.000034	-0.000006	-0.000024
		AEY1	0.000000	0.000000	-0.000011	0.000006	0.000001	0.000000
		AEY2	-0.000001	0.000000	0.000006	-0.000003	-0.000002	0.000000
		AEY3	0.000003	0.000000	0.000010	-0.000007	0.000004	0.000002
		AEY4	0.000000	0.000001	0.000017	-0.000010	0.000002	0.000002
BE1	GLOBAL							
		STIFFX	0.072030	-0.000115	-0.000255	-0.000344	-0.000153	0.000327
		STIFFZ	-0.000108	-0.000080	0.007304	-0.003397	0.000155	-0.000214
		BEY	-0.000012	-0.000865	0.000004	0.000084	-0.000001	-0.001554
		AEY	-0.000012	-0.000865	0.000004	0.000084	-0.000001	-0.001554
		AEY1	0.000000	0.000000	-0.000012	0.000012	-0.000001	0.000012
		AEY2	0.000000	-0.000009	0.000007	0.000007	-0.000001	-0.000034
		AEY3	0.000003	-0.000021	0.000013	0.000056	0.000009	-0.000002
		AEY4	0.000008	-0.000140	0.000034	0.000164	-0.000027	-0.000504
BF1	GLOBAL							
		STIFFX	0.072184	0.000150	-0.000152	-0.000723	0.000053	0.002013
		STIFFZ	-0.000062	-0.000057	0.006866	-0.003221	0.001107	0.000295
		BEY	0.000024	-0.000453	0.000006	0.000070	0.000007	0.001772

		AEY	0.000024	-0.000453	0.000006	0.000070	0.000007	0.001772
		AEY1	0.000000	0.000002	-0.000010	0.000005	-0.000004	-0.000006
		AEY2	-0.000001	-0.000009	0.000005	0.000007	0.000006	0.000034
		AEY3	0.000000	-0.000011	0.000010	0.000024	0.000004	0.000044
		AEY4	-0.000013	-0.000136	0.000029	0.000152	0.000034	0.000515
BG1	GLOBAL							
		STIFFX	0.072528	-0.000903	-0.000172	0.002653	0.000470	-0.000295
		STIFFZ	0.000082	-0.000047	0.005979	-0.002842	0.001311	0.000024
		BEY	0.000005	-0.000005	0.000003	0.000009	0.000004	0.000017
		AEY	0.000005	-0.000005	0.000003	0.000009	0.000004	0.000017
		AEY1	0.000000	0.000000	-0.000006	0.000003	-0.000004	0.000000
		AEY2	0.000001	0.000000	0.000002	0.000001	0.000004	0.000001
		AEY3	0.000001	-0.000001	0.000007	0.000000	0.000003	0.000001
		AEY4	-0.000003	-0.000002	0.000009	0.000007	0.000007	0.000007
BH1	GLOBAL							
		STIFFX	0.072448	0.001192	-0.000202	-0.003412	0.000675	0.000836
		STIFFZ	0.000070	0.000041	0.004806	-0.002368	0.001597	0.000021
		BEY	0.000005	0.000001	0.000001	-0.000001	0.000003	0.000000
		AEY	0.000005	0.000001	0.000001	-0.000001	0.000003	0.000000
		AEY1	0.000000	0.000000	-0.000004	0.000002	-0.000003	0.000000
		AEY2	0.000001	0.000000	0.000000	0.000000	0.000004	0.000000
		AEY3	0.000001	0.000000	0.000004	-0.000003	0.000003	0.000000
		AEY4	-0.000002	0.000000	0.000005	-0.000002	0.000006	0.000000
BJ1	GLOBAL							
		STIFFX	0.072205	-0.001243	-0.000129	0.003944	0.001104	0.000224
		STIFFZ	-0.000025	-0.000034	0.003681	-0.001205	0.001954	-0.000103
		BEY	0.000004	0.000000	0.000000	0.000001	0.000003	0.000000
		AEY	0.000004	0.000000	0.000000	0.000001	0.000003	0.000000
		AEY1	0.000000	0.000000	-0.000002	0.000001	-0.000003	0.000000
		AEY2	0.000001	0.000000	-0.000002	0.000001	0.000004	0.000000
		AEY3	0.000001	0.000000	0.000002	0.000000	0.000003	0.000000
		AEY4	-0.000002	0.000000	0.000002	-0.000001	0.000006	0.000000
CE1	GLOBAL							
		STIFFX	0.072086	-0.000040	-0.000268	0.000380	0.000133	0.000314
		STIFFZ	-0.000222	-0.000003	0.007299	-0.003325	0.000248	-0.000170
		BEY	0.000023	-0.000133	0.000027	0.000517	-0.000032	-0.000385
		AEY	0.000023	-0.000133	0.000027	0.000517	-0.000032	-0.000385
		AEY1	0.000000	0.000000	-0.000011	0.000005	-0.000002	0.000001
		AEY2	-0.000001	-0.000001	0.000006	0.000001	0.000002	-0.000004
		AEY3	0.000002	-0.000001	0.000009	-0.000002	0.000001	-0.000002
		AEY4	0.000003	-0.000013	0.000012	0.000050	0.000008	-0.000051
CF1	GLOBAL							
		STIFFX	0.072066	0.000059	-0.000167	0.000011	0.000209	0.000675
		STIFFZ	-0.000413	-0.000009	0.006849	-0.003100	0.001064	0.000077
		BEY	-0.000018	-0.000118	0.000028	0.000456	0.000037	0.000441
		AEY	-0.000018	-0.000118	0.000028	0.000456	0.000037	0.000441
		AEY1	0.000001	0.000000	-0.000009	0.000004	-0.000003	0.000000
		AEY2	-0.000002	-0.000001	0.000004	0.000002	0.000003	0.000004
		AEY3	0.000001	-0.000001	0.000008	-0.000001	0.000002	0.000003
		AEY4	-0.000009	-0.000013	0.000010	0.000050	-0.000001	0.000051
CG1	GLOBAL							
		STIFFX	0.072057	-0.000169	-0.000221	0.000584	0.000399	-0.000037
		STIFFZ	-0.000532	0.000064	0.006023	-0.002871	0.001390	0.000035
		BEY	0.000003	-0.000003	0.000004	0.000018	0.000009	0.000009
		AEY	0.000003	-0.000003	0.000004	0.000018	0.000009	0.000009
		AEY1	0.000001	0.000000	-0.000007	0.000003	-0.000003	0.000000
		AEY2	-0.000001	0.000000	0.000002	-0.000001	0.000003	0.000000
		AEY3	0.000000	0.000000	0.000007	-0.000003	0.000003	0.000000
		AEY4	-0.000005	0.000001	0.000009	-0.000005	0.000002	-0.000001
CH1	GLOBAL							
		STIFFX	0.071965	0.000202	-0.000283	-0.000514	0.000264	0.000225
		STIFFZ	-0.000588	0.000028	0.004665	-0.001899	0.002092	0.000045
		BEY	0.000002	0.000000	0.000001	-0.000001	0.000005	0.000000
		AEY	0.000002	0.000000	0.000001	-0.000001	0.000005	0.000000
		AEY1	0.000001	0.000000	-0.000004	0.000002	-0.000004	0.000000
		AEY2	-0.000001	0.000000	0.000000	0.000000	0.000003	0.000000
		AEY3	0.000000	0.000000	0.000004	-0.000002	0.000003	0.000000
		AEY4	-0.000005	0.000000	0.000005	-0.000002	0.000005	0.000000
SR7	GLOBAL							
		STIFFX	0.072260	0.000009	-0.000130	0.000316	0.000057	0.000376
		STIFFZ	-0.000378	0.000704	0.006860	0.026993	-0.000105	-0.001754
		BEY	0.000010	0.000001	-0.000001	-0.000130	-0.000034	-0.000030
		AEY	0.000010	0.000001	-0.000001	-0.000130	-0.000034	-0.000030
		AEY1	0.000002	-0.000025	-0.000013	-0.000332	-0.000067	-0.000035
		AEY2	-0.000003	-0.000002	0.000007	-0.000049	-0.000059	-0.000071
		AEY3	0.000004	0.000007	0.000010	0.000259	0.000057	0.000000
		AEY4	-0.000005	0.000016	0.000019	0.000324	0.000046	-0.000010
SR8	GLOBAL							
		STIFFX	0.072149	0.000101	-0.000289	-0.000025	0.000211	0.000904
		STIFFZ	0.000023	-0.000206	0.006776	0.026311	-0.000259	-0.003663
		BEY	0.000014	-0.000035	-0.000008	-0.000285	-0.000035	-0.000073
		AEY	0.000014	-0.000035	-0.000008	-0.000285	-0.000035	-0.000073
		AEY1	-0.000001	-0.000002	-0.000012	-0.000457	-0.000049	0.000000
		AEY2	0.000012	-0.000105	-0.000004	-0.000409	-0.000176	-0.000233
		AEY3	0.000004	0.000004	0.000013	0.000406	0.000057	-0.000003
		AEY4	0.000003	-0.000044	0.000002	0.000266	-0.000041	-0.000105
SR21	GLOBAL							
		STIFFX	0.071924	-0.000257	-0.000166	0.000677	0.000165	-0.011904
		STIFFZ	-0.000157	-0.000784	0.006924	0.029637	-0.000198	0.001541
		BEY	0.000004	-0.000084	-0.000002	-0.000786	-0.000020	-0.000962
		AEY	0.000004	-0.000084	-0.000002	-0.000786	-0.000020	-0.000962
		AEY1	-0.000001	0.000007	-0.000012	-0.000237	-0.000012	-0.000002
		AEY2	-0.000002	0.000004	0.000006	-0.000069	-0.000009	0.000040
		AEY3	0.000006	-0.000106	0.000014	0.001193	-0.000003	-0.000800
		AEY4	0.000001	-0.000060	0.000020	0.000636	0.000033	-0.000336
SR22	GLOBAL							

```
                STIFFX        0.071664      0.000187     -0.000298     -0.000456      0.000154     -0.009036
                STIFFZ       -0.000014     -0.001146      0.006857      0.031862      0.000336      0.000012
                BEY          -0.000004     -0.000559     -0.000022     -0.006616     -0.000106      0.000034
                AEY          -0.000004     -0.000559     -0.000022     -0.006616     -0.000106      0.000034
                AEY1          0.000000      0.000016     -0.000010     -0.000246     -0.000008     -0.000001
                AEY2          0.000000     -0.000044      0.000005      0.000392     -0.000004      0.000004
                AEY3          0.000000     -0.000060      0.000010      0.000478      0.000007     -0.000027
                AEY4          0.000001     -0.000682      0.000016      0.006060      0.000090      0.000038
1
 { 2033} >
 { 2034} > $
 { 2035} > $==============================DEFINE DYNAMIC LOADING=======================
 { 2036} > $
 { 2037} > UNITS CYCLES SECONDS
 { 2038} > $
 { 2039} > DELETE RESPONSE SPECTRUM 'OBEH'
 { 2040} > DELETE RESPONSE SPECTRUM 'OBEV'
 { 2041} > DELETE RESPONSE SPECTRUM 'SSEH'
 { 2042} > DELETE RESPONSE SPECTRUM 'SSEV'
 { 2043} >
 { 2044} > $*******************************************************
 { 2045} > STORE RESPONSE SPECTRA ACCELERATION LINEAR VS FREQUENCY LOG 'OBEH'
 { 2046} > DAMPING RATIO 0.02 FACTOR 386.08
 { 2047} >
 { 2048} > 0.0316   0.182   0.0415    0.220          0.0528 0.273      0.0716    0.330
 { 2049} > 0.0811   0.364   0.0999    0.440          0.1031 0.455      0.1512    0.546
 { 2050} > 0.1514   0.550   0.1545    0.636          0.1545 0.660      0.1545    0.727
 { 2051} > 0.1551   0.770   0.1741    0.818          0.1826 0.880      0.1863    0.909
 { 2052} > 0.1863   0.990   0.1863    1.000          0.2131 1.091      0.2131    1.100
 { 2053} > 0.2131   1.182   0.2273    1.210          0.2664 1.273      0.2779    1.320
 { 2054} > 0.2883   1.364   0.3275    1.430          0.3416 1.455      0.3646    1.540
 { 2055} > 0.3660   1.546   0.3660    1.636          0.3660 1.650      0.4357    1.727
 { 2056} > 0.4357   1.760   0.4357    1.818          0.4357 1.870      0.4357    1.909
 { 2057} > 0.4357   1.980   0.4357    2.000          0.4357 2.090      0.4355    2.091
 { 2058} > 0.4269   2.182   0.4269    2.200          0.4269 2.273      0.4269    2.310
 { 2059} > 0.4269   2.364   0.4269    2.420          0.4269 2.455      0.4355    2.530
 { 2060} > 0.4443   2.546   0.4443    2.636          0.4443 2.640      0.4443    2.727
 { 2061} > 0.4443   2.750   0.4443    2.860          0.4443 2.864      0.4443    2.970
 { 2062} > 0.4443   3.000   0.4443    3.080          0.4290 3.136      0.4202    3.190
 { 2063} > 0.4400   3.273   0.4400    3.300          0.4400 3.455      0.4400    3.465
 { 2064} > 0.4400   3.630   0.4400    3.636          0.4400 3.795      0.4400    3.818
 { 2065} > 0.4400   3.960   0.4365    4.000          0.4213 4.180      0.4213    4.182
 { 2066} > 0.4551   4.364   0.4551    4.400          0.4551 4.546      0.4704    4.620
 { 2067} > 0.5106   4.773   0.5130    4.840          0.5411 5.000      0.5411    5.060
 { 2068} > 0.5411   5.227   0.5411    5.280          0.5411 5.455      0.5411    5.500
 { 2069} > 0.5411   5.682   0.5411    5.775          0.5411 5.909      0.5411    6.050
 { 2070} > 0.5055   6.136   0.4917    6.325          0.4917 6.364      0.4917    6.455
 { 2071} > 0.4917   6.591   0.4917    6.600          0.4917 6.818      0.4917    6.875
 { 2072} > 0.4917   7.046   0.4917    7.150          0.4917 7.273      0.4917    7.425
 { 2073} > 0.4502   7.636   0.4443    7.700          0.4439 7.727      0.4429    7.810
 { 2074} > 0.4360   7.975   0.4322    8.182          0.4309 8.250      0.4028    8.525
 { 2075} > 0.3933   8.636   0.3795    8.800          0.3663 9.091      0.3658    9.240
 { 2076} > 0.3658   9.350   0.3446    9.546          0.3397 9.900      0.3397    10.000
 { 2077} > 0.3397   10.450  0.3393    10.455 0.3009   10.909  0.2963     11.000
 { 2078} > 0.2963   11.364  0.2963    11.550 0.2801   11.818  0.2634     12.100
 { 2079} > 0.2617   12.273  0.2579    12.650 0.2565   12.727  0.2481     13.182
 { 2080} > 0.2477   13.200  0.2313    13.636 0.2313   13.750  0.2313     14.300
 { 2081} > 0.2289   14.546  0.2272    14.727 0.2260   14.850  0.2114     15.400
 { 2082} > 0.2098   15.455  0.1957    15.950 0.1831   16.364  0.1831     16.500
 { 2083} > 0.1831   17.546  0.1831    17.600 0.1778   17.820  0.1737     18.182
 { 2084} > 0.1681   18.700  0.1644    19.091 0.1578   19.800  0.1569     20.000
 { 2085} > 0.1519   21.230  0.1490    22.000 0.1490   22.727  0.1490     23.100
 { 2086} > 0.1489   24.200  0.1483    25.455 0.1477   26.727  0.1474     27.500
 { 2087} > 0.1458   28.182  0.1447    28.636 0.1442   30.800  0.1442     30.909
 { 2088} > 0.1442   32.340  0.1425    34.100 0.1425   34.650  0.1425     37.400
 { 2089} >
 { 2090} > END OF RESPONSE SPECTRUM
 { 2091} >
 { 2092} > $*******************************************************
 { 2093} > STORE RESPONSE SPECTRA ACCELERATION LINEAR VS FREQUENCY LOG 'OBEV'
 { 2094} > DAMPING RATIO 0.02 FACTOR 386.08
 { 2095} >
 { 2096} > 0.0211   0.182   0.0278    0.220          0.0354 0.273      0.0480    0.330
 { 2097} > 0.0544   0.364   0.0669    0.440          0.0691 0.455      0.1014    0.550
 { 2098} > 0.1035   0.660   0.1039    0.770          0.1166 0.818      0.1223    0.880
 { 2099} > 0.1248   1.000   0.1427    1.100          0.1427 1.182      0.1522    1.210
 { 2100} > 0.1784   1.273   0.1861    1.320          0.1929 1.364      0.2191    1.430
 { 2101} > 0.2285   1.455   0.2451    1.546          0.2451 1.636      0.2914    1.727
 { 2102} > 0.2914   2.090   0.2912    2.091          0.2848 2.182      0.2848    2.455
 { 2103} > 0.2905   2.530   0.2963    2.546          0.2963 3.080      0.2858    3.136
 { 2104} > 0.2779   3.190   0.2896    3.273          0.2896 3.636      0.2896    3.960
 { 2105} > 0.2875   4.000   0.2785    4.182          0.2900 4.364      0.2900    4.546
 { 2106} > 0.2939   4.620   0.3142    4.773          0.3205 4.840      0.3351    5.000
 { 2107} > 0.3351   5.500   0.3351    6.050          0.3227 6.136      0.3240    6.325
 { 2108} > 0.3242   6.364   0.3250    6.455          0.3266 6.591      0.3266    7.046
 { 2109} > 0.3266   7.636   0.3266    7.975          0.3154 8.182      0.3118    8.250
 { 2110} > 0.2939   8.525   0.2852    8.636          0.2810 8.800      0.2810    9.240
 { 2111} > 0.2809   9.350   0.2640    9.546          0.2585 9.900      0.2585    10.450
 { 2112} > 0.2582   10.455  0.2272    10.909 0.2250   11.000  0.2250     11.550
 { 2113} > 0.2036   12.100  0.2006    12.650 0.1984   13.200  0.1752     13.636
 { 2114} > 0.1693   13.750  0.1447    14.300 0.1409   14.546  0.1382     14.727
 { 2115} > 0.1254   15.950  0.1204    16.500 0.1199   17.546  0.1199     17.600
 { 2116} > 0.1156   17.820  0.1009    19.800 0.1009   21.230  0.0947     22.000
 { 2117} > 0.0940   22.727  0.0940    25.455 0.0959   26.727  0.0959     32.340
 { 2118} > 0.0930   34.100  0.0930    37.400
 { 2119} >
```

```
{ 2120} > END OF RESPONSE SPECTRUM
{ 2121} >
{ 2122} > $*********************************************
{ 2123} > STORE RESPONSE SPECTRA ACCELERATION LINEAR VS FREQUENCY LOG 'SSEH'
{ 2124} > DAMPING RATIO 0.03 FACTOR 386.08
{ 2125} >
{ 2126} > 0.0585   0.182   0.0756    0.220          0.0948 0.273      0.1317    0.330
{ 2127} > 0.1505   0.364   0.1866    0.440          0.1927 0.455      0.2672    0.546
{ 2128} > 0.2673   0.550   0.2686    0.636          0.2686 0.660      0.2686    0.727
{ 2129} > 0.2686   0.770   0.2890    0.818          0.3238 0.880      0.3394    0.909
{ 2130} > 0.3394   0.990   0.3394    1.000          0.3852 1.091      0.3863    1.100
{ 2131} > 0.3964   1.182   0.4167    1.210          0.4601 1.273      0.4844    1.320
{ 2132} > 0.5061   1.364   0.5750    1.430          0.5997 1.455      0.6165    1.540
{ 2133} > 0.6176   1.546   0.6209    1.636          0.6370 1.650      0.7257    1.727
{ 2134} > 0.7257   1.760   0.7257    1.818          0.7257 1.870      0.7257    1.909
{ 2135} > 0.7257   1.980   0.7257    2.000          0.7257 2.090      0.7255    2.091
{ 2136} > 0.7502   2.182   0.7502    2.200          0.7502 2.273      0.7502    2.310
{ 2137} > 0.7502   2.364   0.7502    2.420          0.7502 2.455      0.7502    2.530
{ 2138} > 0.7502   2.546   0.7502    2.636          0.7502 2.640      0.7467    2.727
{ 2139} > 0.7467   2.750   0.7467    2.860          0.7467 2.864      0.7467    2.970
{ 2140} > 0.7467   3.000   0.7467    3.080          0.7298 3.136      0.7140    3.190
{ 2141} > 0.7350   3.273   0.7350    3.300          0.7350 3.455      0.7350    3.465
{ 2142} > 0.7350   3.630   0.7350    3.636          0.7350 3.795      0.7350    3.818
{ 2143} > 0.7350   3.960   0.7342    4.000          0.7342 4.180      0.7342    4.182
{ 2144} > 0.7674   4.364   0.7698    4.400          0.7791 4.546      0.8001    4.620
{ 2145} > 0.8471   4.773   0.8521    4.840          0.8637 5.000      0.8637    5.060
{ 2146} > 0.8637   5.227   0.8637    5.280          0.8637 5.455      0.8637    5.500
{ 2147} > 0.8637   5.682   0.8637    5.775          0.8637 5.909      0.8637    6.050
{ 2148} > 0.8321   6.136   0.8076    6.325          0.8076 6.364      0.8076    6.455
{ 2149} > 0.8076   6.591   0.8076    6.600          0.8076 6.818      0.8076    6.875
{ 2150} > 0.8076   7.046   0.8076    7.150          0.8076 7.273      0.8076    7.425
{ 2151} > 0.7632   7.636   0.7501    7.700          0.7459 7.727      0.7418    7.810
{ 2152} > 0.7320   7.975   0.7320    8.182          0.7320 8.250      0.7092    8.525
{ 2153} > 0.6859   8.636   0.6522    8.800          0.6415 9.091      0.6362    9.240
{ 2154} > 0.6352   9.350   0.6059    9.546          0.5892 9.900      0.5892    10.000
{ 2155} > 0.5892   10.450  0.5887    10.455 0.5427  10.909  0.5338     11.000
{ 2156} > 0.5183   11.364  0.5105    11.550 0.4896  11.818  0.4722     12.100
{ 2157} > 0.4722   12.273  0.4722    12.650 0.4668  12.727  0.4360     13.182
{ 2158} > 0.4348   13.200  0.4141    13.636 0.4141  13.750  0.4141     14.300
{ 2159} > 0.4141   14.546  0.4141    14.727 0.4141  14.850  0.3872     15.400
{ 2160} > 0.3844   15.455  0.3595    15.950 0.3449  16.364  0.3418     16.500
{ 2161} > 0.3399   17.546  0.3398    17.600 0.3355  17.820  0.3264     18.182
{ 2162} > 0.3137   18.700  0.3088    19.091 0.3002  19.800  0.2995     20.000
{ 2163} > 0.2955   21.230  0.2853    22.000 0.2853  22.727  0.2853     23.100
{ 2164} > 0.2813   24.200  0.2805    25.455 0.2797  26.727  0.2793     27.500
{ 2165} > 0.2772   28.182  0.2761    28.636 0.2761  30.800  0.2761     30.909
{ 2166} > 0.2761   32.340  0.2686    34.100 0.2686  34.650  0.2686     37.400
{ 2167} >
{ 2168} > END OF RESPONSE SPECTRUM
{ 2169} >
{ 2170} > $*********************************************
{ 2171} > STORE RESPONSE SPECTRA ACCELERATION LINEAR VS FREQUENCY LOG 'SSEV'
{ 2172} > DAMPING RATIO 0.03 FACTOR 386.08
{ 2173} >
{ 2174} > 0.0392   0.182   0.0506    0.220          0.0882 0.330      0.1250    0.440
{ 2175} > 0.1790   0.546   0.1790    0.550          0.1800 0.636      0.1800    0.770
{ 2176} > 0.1935   0.818   0.2274    0.909          0.2274 1.000      0.2585    1.100
{ 2177} > 0.2653   1.182   0.2789    1.210          0.3080 1.273      0.3242    1.320
{ 2178} > 0.3846   1.430   0.4127    1.540          0.4134 1.546      0.4154    1.636
{ 2179} > 0.4261   1.650   0.4854    1.727          0.4854 2.090      0.4852    2.091
{ 2180} > 0.5007   2.182   0.5007    2.420          0.5007 2.640      0.4969    2.727
{ 2181} > 0.4969   3.080   0.4867    3.300          0.4867 3.636      0.4867    3.960
{ 2182} > 0.4841   4.000   0.4819    4.180          0.5032 4.546      0.5620    5.000
{ 2183} > 0.5620   5.500   0.5620    6.050          0.5583 6.136      0.5583    6.600
{ 2184} > 0.5583   7.425   0.5498    7.636          0.5482 7.700      0.5482    7.810
{ 2185} > 0.5328   7.975   0.5328    8.250          0.4934 8.800      0.4934    9.240
{ 2186} > 0.4433   9.900   0.4433    10.450 0.4013  11.000  0.3809     11.550
{ 2187} > 0.3572   12.100  0.3347    13.200 0.2749  14.300  0.2499     15.400
{ 2188} > 0.2267   16.500  0.2211    17.546 0.2001  18.700  0.1936     19.800
{ 2189} > 0.1936   21.230  0.1851    22.000 0.1796  23.100  0.1796     25.455
{ 2190} > 0.1842   26.727  0.1842    28.182 0.1842  30.909  0.1842     32.340
{ 2191} > 0.1778   34.100  0.1778    37.400
{ 2192} >
{ 2193} > END OF RESPONSE SPECTRUM
{ 2194} >
{ 2195} > $*****************************************************************************************
{ 2196} > $
{ 2197} > INERTIA OF JOINTS CONSISTENT
{ 2198} > INERTIA OF JOINTS WEIGHT GRAVITY 386.08
{ 2199} > 'AA101' TO 'AA104' 'AB101' TO 'AB104' 'AC101' TO 'AC104' 'AE101' TO 'AE104' -
{ 2200} >_'AG101' TO 'AG104' 'AH101' TO 'AH104' 'AJ101' TO 'AJ104' 'BA101' TO 'BA104' -
{ 2201} >_'BB101' TO 'BB104' 'BC101' TO 'BC104' 'BD101' TO 'BD104' 'CB101' TO 'CB104' -
{ 2202} >_'CC101' TO 'CC104' 'CD101' TO 'CD104'   TRANS X 28.125 Y 28.125 Z 28.125
{ 2203} >
{ 2204} > 'AA501' TO 'AA504' 'AB501' TO 'AB504' 'AC501' TO 'AC504' 'AE501' TO 'AE504' -
{ 2205} >_'AG501' TO 'AG504' 'AH501' TO 'AH504' 'AJ501' TO 'AJ504' 'BA501' TO 'BA504' -
{ 2206} >_'BB501' TO 'BB504' 'BC501' TO 'BC504' 'BD501' TO 'BD504' 'CB501' TO 'CB504' -
{ 2207} >_'CC501' TO 'CC504' 'CD501' TO 'CD504' TRANS X 27.125 Y 27.125 Z 27.125
{ 2208} >
{ 2209} > 'AA201' TO 'AA204' 'AB201' TO 'AB204' 'AC201' TO 'AC204' 'AE201' TO 'AE204' -
{ 2210} >_'AG201' TO 'AG204' 'AH201' TO 'AH204' 'AJ201' TO 'AJ204' 'BA201' TO 'BA204' -
{ 2211} >_'BB201' TO 'BB204' 'BC201' TO 'BC204' 'BD201' TO 'BD204' 'CB201' TO 'CB204' -
{ 2212} >_'CC201' TO 'CC204' 'CD201' TO 'CD204' TRANS X 52.75 Y 52.75 Z 52.75
{ 2213} >
{ 2214} > 'AA301' TO 'AA304' 'AB301' TO 'AB304' 'AC301' TO 'AC304' 'AE301' TO 'AE304' -
{ 2215} >_'AG301' TO 'AG304' 'AH301' TO 'AH304' 'AJ301' TO 'AJ304' 'AA401' TO 'AA404' -
```