COLA Table of Contents

Part 1 — General and Financial Information

Part 2 — Final Safety Analysis Report

Part 3 — Applicant's Environmental Report - Combined License Stage

Part 4 — Technical Specifications

Part 5 — Emergency Plan

Part 6 — LWA Request

Part 7 — Departures, Exemptions, and Variances

Part 8 — Safeguards/Security Plans

Part 9 — Withheld Information

Part 10 — Proposed License Conditions (Including ITAAC)

Part 11 — Enclosures

Vogtle Early Site Permit Application

Overall Table of Contents

Vogtle Electric Generating Plant, Units 3 & 4

COL Application

Part 2

Final Safety Analysis Report

Revision 0

OVERALL TABLE OF CONTENTS

CHAPTER 1
INTRODUCTION AND GENERAL DESCRIPTION OF THE PLANT
1.1 Introduction 1.1-1
1.1.1 Plant Location 1.1-1
1.1.5 Schedule 1.1-2
1.1.7 Combined License Information 1.1-4
1.2 General Plant Description 1.2-1
1.2.2 Site Description 1.2-1
1.2.3 Plant Arrangement Description 1.2-2
1.3 Comparisons With Similar Facility Designs 1.3-1
1.4 Identification of Agents and Contractors 1.4-1
1.4.1 Applicant – Program Manager 1.4-1
1.5 Requirements for Further Technical Information 1.5-1
1.6 Material Referenced 1.6-1
1.7 Drawings and Other Detailed Information 1.7-1
1.7.2 Piping and Instrumentation Diagrams 1.7-1
1.8 Interfaces for Standard Design 1.8-1
1.9 Compliance with Regulatory Criteria 1.9-1
1.9.1 Regulatory Guides 1.9-1
1.9.2 Compliance With Standard Review Plan (NUREG-0800) 1.9-3
1.10 Nuclear Power Plants to be Operated on Multi-unit Sites 1.10-1
1.10.1 Potential Construction Activity Hazards 1.10-1
1.10.2 Potentially Impacted SSCs and Limiting Conditions for Operation 1.10-2
1.10.3 Managerial and Administrative Controls 1.10-2

CHAPTER 2
SITE CHARACTERISTICS
2.0 Site Characteristics 2.0-1
2.1 Geography and Demography 2.1-1
2.1.4 Combined License Information for Geography and Demography 2.1-1
2.2 Nearby Industrial, Transportation, and Military Facilities 2.2-1
2.2.3 Evaluation of Potential Accidents 2.2-1
2.2.4 Combined License Information for Identification of Site-Specific Potential Hazards 2.2-8
2.3 Meteorology 2.3-1
2.3.4 Short-Term Diffusion Estimates 2.3-2
2.3.5 Long-Term Diffusion Estimates 2.3-8
2.3.6 Combined License Information 2.3-8
2.3.7 References 2.3-9
2.4 Hydrologic Engineering 2.4-1
2.4.2 Floods 2.4-1
2.4.10 Flooding Protection Requirements 2.4-5
2.4.14 Technical Specifications and Emergency Operation Requirements 2.4-6

OVERALL TABLE OF CONTENTS (CONT.)

2.4.15 Combined License Information 2.4-6
2.4.16 References 2.4-7
2.5 Geology, Seismology, and Geotechnical Engineering 2.5-1
2.5.7 Combined License Information 2.5-1

CHAPTER 3
DESIGN OF STRUCTURES, COMPONENTS, EQUIPMENT AND SYSTEMS
3.1 Conformance With Nuclear Regulatory Commission General Design Criteria 3.1-1
3.2 Classification of Structures, Components, and Systems 3.2-1
3.2.1 Seismic Classification 3.2-1
3.2.2 AP1000 Classification System 3.2-1
3.3 Wind and Tornado Loadings 3.3-1
3.3.3 Combined License Information 3.3-2
3.4 Water Level (Flood) Design 3.4-1
3.4.3 Combined License Information 3.4-1
3.5 Missile Protection 3.5-1
3.5.4 Combined License Information 3.5-2
3.6 Protection Against the Dynamic Effects Associated with the Postulated Rupture of Piping 3.6-1
3.7 Seismic Design 3.7-1
3.7.5 Combined License Information 3.7-3
3.8 Design of Category I Structures 3.8-1
3.9 Mechanical Systems and Components 3.9-1
3.9.6 Inservice Testing of Pumps and Valves 3.9-4
3.9.8 Combined License Information 3.9-8
3.9.9 References 3.9-9
3.10 Seismic and Dynamic Qualification of Seismic Category I Mechanical and Electrical Equipment 3.10-1
3.11 Environmental Qualification of Mechanical and Electrical Equipment 3.11-1
3.11.5 Combined License Information Item for Equipment Qualification File 3.11-1

CHAPTER 4
REACTOR
4.1 Summary Description 4.1-1
4.2 Fuel System Design 4.2-1
4.3 Nuclear Design 4.3-1
4.4 Thermal and Hydraulic Design 4.4-1
4.4.7 Combined License Information 4.4-1
4.5 Reactor Materials 4.5-1
4.6 Functional Design of Reactivity Control Systems 4.6-1

OVERALL TABLE OF CONTENTS (CONT.)

CHAPTER 5
REACTOR COOLANT SYSTEM AND CONNECTED SYSTEMS
5.1 Summary Description 5.1-1
5.2 Integrity of Reactor Coolant Pressure Boundary 5.2-1
5.2.4 Inservice Inspection and Testing of Class 1 Components 5.2-1
5.2.6 Combined License Information Items 5.2-8
5.2.7 References 5.2-8
5.3 Reactor Vessel 5.3-1
5.3.6 Combined License Information 5.3-2
5.4 Component and Subsystem Design 5.4-1
5.4.15 Combined License Information Items 5.4-1
5.4.16 References 5.4-2

CHAPTER 6
ENGINEERED SAFETY FEATURES
6.0 Engineered Safety Features 6.0-1
6.1 Engineered Safety Features Materials 6.1-1
6.1.3 Combined License Information Items 6.1-2
6.2 Containment Systems 6.2-1
6.2.6 Combined License Information for Containment Leak Rate Testing 6.2-3
6.3 Passive Core Cooling System 6.3-1
6.3.8 Combined License Information 6.3-1
6.4 Habitability Systems 6.4-1
6.4.3 System Operation 6.4-1
6.4.4 System Safety Evaluation 6.4-1
6.4.7 Combined License Information 6.4-2
6.5 Fission Product Removal and Control Systems 6.5-1
6.6 Inservice Inspection of Class 2, 3, and MC Components 6.6-1
6.6.1 Components Subject to Examination 6.6-1
6.6.2 Accessibility 6.6-1
6.6.3 Examination Techniques and Procedures 6.6-2
6.6.4 Inspection Intervals 6.6-4
6.6.6 Evaluation of Examination Results 6.6-4
6.6.9 Combined License Information Items 6.6-5

CHAPTER 7
INSTRUMENTATION AND CONTROLS
7.1 Introduction 7.1-1
7.2 Reactor Trip 7.2-1
7.3 Engineered Safety Features 7.3-1
7.4 Systems Required for Safe Shutdown 7.4-1
7.5 Safety-Related Display Information 7.5-1
7.6 Interlock Systems Important to Safety 7.6-1
7.7 Control and Instrumentation Systems 7.7-1

OVERALL TABLE OF CONTENTS (CONT.)

CHAPTER 8
ELECTRIC POWER
8.1 Introduction 8.1-1
8.1.1 Utility Grid Description 8.1-1
8.2 Offsite Power System 8.2-1
8.2.1 System Description 8.2-1
8.2.2 Grid Stability 8.2-10
8.2.5 Combined License Information for Offsite Electrical Power 8.2-12
8.3 Onsite Power Systems 8.3-1
8.3.3 Combined License Information for Onsite Electrical Power 8.3-3
8.3.4 References 8.3-4

CHAPTER 9
AUXILIARY SYSTEMS
9.1 Fuel Storage and Handling 9.1-1
9.1.6 Combined License Information for Fuel Storage and Handling 9.1-2
9.2 Water Systems 9.2-1
9.2.5 Potable Water System 9.2-1
9.2.6 Sanitary Drains 9.2-3
9.2.8 Turbine Building Closed Cooling Water System 9.2-3
9.2.9 Waste water system 9.2-9
9.2.11 Raw Water System 9.2-10
9.2.12 Combined License Information 9.2-16
9.2.13 References 9.2-16
9.3 Process Auxiliaries 9.3-1
9.3.7 Combined License Information 9.3-1
9.4 Air-Conditioning, Heating, Cooling, and Ventilation System 9.4-1
9.4.12 Combined License Information 9.4-2
9.4.13 References 9.4-3
9.5 Other Auxiliary Systems 9.5-1
9.5.5 References 9.5-16
9A.2 Fire Protection Methodology 9A-1
9A.2.1 Fire Area Description 9A-1
9A.3.3 Yard Area and Outlying Buildings 9A-1
9A.4 References 9A-2

OVERALL TABLE OF CONTENTS (CONT.)

CHAPTER 10
STEAM AND POWER CONVERSION
10.1 SUMMARY DESCRIPTION 10.1-1
10.1.3 Combined License Information on Erosion-Corrosion Monitoring 10.1-1
10.2 Turbine-Generator 10.2-1
10.2.2 System Description 10.2-1
10.2.3 Turbine Rotor Integrity 10.2-1
10.2.6 Combined License Information on Turbine Maintenance and Inspection 10.2-2
10.3 Main Steam Supply System 10.3-1
10.4 Other Features of Steam and Power Conversion System 10.4-1
10.4.5 Circulating Water System 10.4-1
10.4.12 Combined License Information 10.4-10

CHAPTER 11
RADIOACTIVE WASTE MANAGEMENT
11.1 Source Terms 11.1-1
11.2 Liquid Waste Management Systems 11.2-1
11.2.5 Combined License Information 11.2-3
11.2.6 References 11.2-4
11.3 Gaseous Waste Management System 11.3-1
11.3.5 Combined License Information 11.3-2
11.3.6 References 11.3-2
11.4 Solid Waste Management 11.4-1
11.4.5 Quality Assurance 11.4-1
11.4.6 Combined License Information for Solid Waste Management System Process Control Program 11.4-1
11.4.7 References 11.4-3
11.5 Radiation Monitoring 11.5-1
11.5.3 Effluent monitoring and sampling 11.5-1
11.5.4 Process and Airborne Monitoring and Sampling 11.5-2
11.5.7 Combined License Information 11.5-4
11.5.8 References 11.5-4

CHAPTER 12
RADIATION PROTECTION
12.1 Assuring that Occupational Radiation Exposures Are As-Low-As-Reasonably Achievable (ALARA) 12.1-1
12.1.3 Combined License Information 12.1-1
12.2 Radiation Sources 12.2-1
12.2.3 Combined License Information 12.2-2
12.3 Radiation Protection Design Features 12.3-1
12.3.1 Facility Design Features 12.3-1
12.3.4 Area Radiation and Airborne Radioactivity Monitoring Instrumentation 12.3-1

OVERALL TABLE OF CONTENTS (CONT.)

12.4 Dose Assessment 12.4-1
12.4.4 References 12.4-5
12.5 Health Physics Facilities Design 12.5-1
12.5.5 Combined License Information 12.5-1
12AA Radiation Protection Program Description 12.AA-1
12AA.5.4.13Groundwater Monitoring Program 12AA-3
12AA.5.4.14Record of Operational Events of Interest for Decommissioning 12AA-3

CHAPTER 13
CONDUCT OF OPERATIONS
13.1 Organizational Structure of Applicant 13.1-1
13.1.1 Management and Technical Support Organization 13.1-1
13.1.2 Operating Organization 13.1-13
13.1.3 Qualifications of Nuclear Plant Personnel 13.1-18
13.1.4 Combined License Information Item 13.1-18
13.1.5 References 13.1-19
13.2 Training 13.2-1
13.2.1 Combined License Information Item 13.2-1
13.2.2 References 13.2-1
13.3 Emergency Planning 13.3-1
13.3.6 Combined License Information Item 13.3-1
13.3.7 New or Additional Information 13.3-2
13.3.8 ESP COL Action Items 13.3-2
13.4 Operational Programs 13.4-1
13.4.1 Combined License Information Item 13.4-1
13.4.2 References 13.4-1
13.5 Plant Procedures 13.5-1
13.5.1 Administrative Procedures 13.5-1
13.5.2 Operating and Maintenance Procedures 13.5-3
13.5.3 Combined License Information Item 13.5-6
13.5.4 References 13.5-6
13.6 Security 13.6-1
13.6.1 Combined License Information Item 13.6-1
13.6.2 ESP COL Action Items 13.6-1
13.6.3 References 13.6-1
13.7 Fitness for Duty 13.7-1
13.7.1 References 13.7-1

CHAPTER 14
INITIAL TEST PROGRAM
14.1 Specific Information to be Included in Preliminary/Final Safety Analysis Reports 14.1-1
14.2 Specific Information To Be Included in Standard Safety Analysis Reports 14.2-1
14.2.2 Organization, Staffing, and Responsibilities 14.2-1
14.2.11 References 14.2-9

OVERALL TABLE OF CONTENTS (CONT.)

14.3 Certified Design Material 14.3-1
14.3.3 CDM Section 3.0, Non-System Based Design Descriptions and ITAAC 14.3-3
14.4 Combined License Applicant Responsibilities 14.4-1
14.4.1 Organization and Staffing 14.4-1
14.4.2 Test Specifications and Procedures 14.4-1
14.4.4 Review and Evaluation of Test Results 14.4-1
14.4.5 Interface Requirements 14.4-1
14.4.6 First-Plant-Only and Three-Plant-Only Tests 14.4-2

CHAPTER 15
ACCIDENT ANALYSES
15.0 Accident Analyses 15.0-1
15.1 Increase in Heat Removal From the Primary System 15.1-1
15.2 Decrease in Heat Removal by the Secondary System 15.2-1
15.3 Decrease in Reactor Coolant System Flow Rate 15.3-1
15.4 Reactivity and Power Distribution Anomalies 15.4-1
15.5 Increase in Reactor Coolant Inventory 15.5-1
15.6 Decrease in Reactor Coolant Inventory 15.6-1
15.7 Radioactive Release from a Subsystem or Component 15.7-1
15.7.6 Combined License Information 15.7-1
15.8 Anticipated Transients without Scram 15.8-1
15A.3.3Atmospheric Dispersion Factors 15A-1

CHAPTER 16
TECHNICAL SPECIFICATIONS
16.1 Technical Specifications 16.1-1
16.1.1 Introduction to Technical Specifications 16.1-1
16.2 Design Reliability Assurance Program 16.2-1
16.3 Investment Protection 16.3-1
16.3.1 Investment Protection Short-Term Availability Controls 16.3-1
16.3.2 Combined License Information 16.3-1

CHAPTER 17
QUALITY ASSURANCE
17.1 Quality Assurance During the Design and Construction Phases 17.1-1
17.2 Quality Assurance During the Operations Phase 17.2-1
17.3 Quality Assurance During Design, Procurement, Fabrication, Inspection, and/or Testing of Nuclear Power Plant Items 17.3-1
17.4 Design Reliability Assurance Program 17.4-1
17.5 Quality Assurance Program Description - New License Applicants 17.5-1
17.6 Maintenance Rule Program 17.6-1
17.7 Combined License Information Items 17.7-1
17.8 References 17.8-1

OVERALL TABLE OF CONTENTS (CONT.)

CHAPTER 18
HUMAN FACTORS ENGINEERING
18.1 Overview 18.1-1
18.2 Human Factors Engineering Program Management 18.2-1
18.2.6 Combined License Information 18.2-1
18.2.7 References 18.2-1
18.3 Operating Experience Review 18.3-1
18.4 Functional Requirements Analysis and Allocation 18.4-1
18.5 AP1000 Task Analysis Implementation Plan 18.5-1
18.6 Staffing 18.6-1
18.6.1 Combined License Information Item 18.6-2
18.6.2 References 18.6-2
18.7 Integration of Human Reliability Analysis with Human Factors Engineering 18.7-1
18.8 Human System Interface Design 18.8-1
18.9 Procedure Development 18.9-1
18.10 Training Program Development 18.10-1
18.10.1 Combined License Information 18.10-1
18.11 Human Factors Engineering Verification and Validation 18.11-1
18.12 Inventory 18.12-1
18.13 Design Implementation 18.13-1
18.14 Human Performance Monitoring 18.14-1

CHAPTER 19
PROBABILISTIC RISK ASSESSMENT
19.1 Introduction 19.1-1
19.2 Internal Initiating Events 19.2-1
19.3 Modeling of Special Initiators 19.3-1
19.4 Event Tree Models 19.4-1
19.5 Support Systems 19.5-1
19.6 Success Criteria Analysis 19.6-1
19.7 Fault Tree Guidelines 19.7-1
19.8 Passive Core Cooling System - Passive Residual Heat Removal 19.8-1
19.9 Passive Core Cooling System - Core Makeup Tanks 19.9-1
19.10 Passive Core Cooling System - Accumulator 19.10-1
19.11 Passive Core Cooling System - Automatic Depressurization System 19.11-1
19.12 Passive Core Cooling System - In-Containment Refueling Water Storage Tank 19.12-1
19.13 Passive Containment Cooling 19.13-1
19.14 Main and Startup Feedwater System 19.14-1
19.15 Chemical and Volume Control System 19.15-1
19.16 Containment Hydrogen Control System 19.16-1
19.17 Normal Residual Heat Removal System 19.17-1
19.18 Component Cooling Water System 19.18-1

OVERALL TABLE OF CONTENTS (CONT.)

19.19 Service Water System 19.19-1
19.20 Central Chilled Water System 19.20-1
19.21 AC Power System 19.21-1
19.22 Class 1E DC & UPS System 19.22-1
19.23 Non-Class 1E DC & UPS System 19.23-1
19.24 Containment Isolation 19.24-1
19.25 Compressed and Instrument Air System 19.25-1
19.26 Protection and Safety Monitoring System 19.26-1
19.27 Diverse Actuation System 19.27-1
19.28 Plant Control System 19.28-1
19.29 Common Cause Analysis 19.29-1
19.30 Human Reliability Analysis 19.30-1
19.31 Other Event Tree Node Probabilities 19.31-1
19.32 Data Analysis and Master Data Bank 19.32-1
19.33 Fault Tree and Core Damage Quantification 19.33-1
19.34 Severe Accident Phenomena Treatment 19.34-1
19.35 Containment Event Tree Analysis 19.35-1
19.36 Reactor Coolant System Depressurization 19.36-1
19.37 Containment Isolation 19.37-1
19.38 Reactor Vessel Reflooding 19.38-1
19.39 In-Vessel Retention of Molten Core Debris 19.39-1
19.40 Passive Containment Cooling 19.40-1
19.41 Hydrogen Mixing and Combustion Analysis 19.41-1
19.42 Conditional Containment Failure Probability Distribution 19.42-1
19.43 Release Frequency Quantification 19.43-1
19.44 MAAP4.0 Code Description and AP1000 Modeling 19.44-1
19.45 Fission Product Source Terms 19.45-1
19.46 Deleted 19.46-1
19.47 Deleted 19.47-1
19.48 Deleted 19.48-1
19.49 Offsite Dose Evaluation 19.49-1
19.50 Importance and Sensitivity Analysis 19.50-1
19.51 Uncertainty Analysis 19.51-1
19.52 Deleted 19.52-1
19.53 Deleted 19.53-1
19.54 Low Power and Shutdown PRA Assessment 19.54-1
19.55 Seismic Margin Analysis 19.55-1
19.56 PRA Internal Flooding Analysis 19.56-1
19.57 Internal Fire Analysis 19.57-1
19.58 Winds, Floods, and Other External Events 19.58-1
19.59 PRA Results and Insights 19.59-1

CHAPTER 1

INTRODUCTION AND GENERAL DESCRIPTION OF THE PLANT

TABLE OF CONTENTS

Section	Title	Page
1.1	INTRODUCTION	1.1-1
1.1.1	PLANT LOCATION	1.1-1
1.1.5	SCHEDULE	1.1-2
1.1.6.1	Regulatory Guide 1.70	1.1-2
1.1.6.3	Text, Tables and Figures	1.1-2
1.1.6.5	Proprietary Information	1.1-3
1.1.6.6	Acronyms	1.1-3
1.1.7	COMBINED LICENSE INFORMATION	1.1-3
1.2	GENERAL PLANT DESCRIPTION	1.2-1
1.2.2	SITE DESCRIPTION	1.2-1
1.2.3	PLANT ARRANGEMENT DESCRIPTION	1.2-2
1.3	COMPARISONS WITH SIMILAR FACILITY DESIGNS	1.3-1
1.4	IDENTIFICATION OF AGENTS AND CONTRACTORS	1.4-1
1.4.1	APPLICANT – PROGRAM MANAGER	1.4-1
1.4.2.8	Other Contractors	1.4-2
1.5	REQUIREMENTS FOR FURTHER TECHNICAL INFORMATION	1.5-1
1.6	MATERIAL REFERENCED	1.6-1
1.7	DRAWINGS AND OTHER DETAILED INFORMATION	1.7-1
1.7.2	PIPING AND INSTRUMENTATION DIAGRAMS	1.7-1
1.8	INTERFACES FOR STANDARD DESIGN	1.8-1
1.9	COMPLIANCE WITH REGULATORY CRITERIA	1.9-1
1.9.1	REGULATORY GUIDES	1.9-1
1.9.1.1	Division 1 Regulatory Guides - Power Reactors	1.9-1
1.9.1.2	Division 4 Regulatory Guides - Environmental and Siting	1.9-2

Section	Title	Page
1.9.1.3	Division 5 Regulatory Guides - Materials and Plant Protection	1.9-2
1.9.1.4	Division 8 Regulatory Guides - Occupational Health	1.9-3
1.9.1.5	Combined License Information	1.9-3
1.9.2	COMPLIANCE WITH STANDARD REVIEW PLAN (NUREG-0800)	1.9-3
1.9.4.1	Review of NRC List of Unresolved Safety Issues and Generic Safety Issues	1.9-4
1.9.4.2.3	New Generic Issues	1.9-4
1.9.5.2.15	Severe Accident Mitigation Design Alternatives	1.9-6
1.9.5.5	Operational Experience	1.9-6
1.10	NUCLEAR POWER PLANTS TO BE OPERATED ON MULTI-UNIT SITES	1.10-1
1.10.1	POTENTIAL CONSTRUCTION ACTIVITY HAZARDS	1.10-1
1.10.2	POTENTIALLY IMPACTED SSCS AND LIMITING CONDITIONS FOR OPERATION	1.10-2
1.10.3	MANAGERIAL AND ADMINISTRATIVE CONTROLS	1.10-2
APP. 1A	CONFORMANCE WITH REGULATORY GUIDES	1A-1
APP. 1B	SEVERE ACCIDENT MITIGATION DESIGN ALTERNATIVES	1B-1
APP. 1AA	CONFORMANCE WITH REGULATORY GUIDES	1AA-1

LIST OF TABLES

Number	Title
1.1-201	Acronyms Used in the FSAR
1.1-202	Left Margin Annotations
1.1-203	Anticipated Schedule for Construction and Operation of Two AP1000 Units at the VEGP Site
1.6-201	Additional Material Referenced
1.6-202	Cross Reference of ESPA SSAR Sections Incorporated by Reference into FSAR Sections
1.8-201	Summary of FSAR Departures from the DCD
1.8-202	COL Item Tabulation
1.8-203	ESP COL Action Item/FSAR Section Cross-References
1.9-201	Regulatory Guide/FSAR Section Cross-References
1.9-202	Conformance with SRP Acceptance Criteria
1.9-203	Listing Of Unresolved Safety Issues And Generic Safety Issues
1.9-204	Generic Communications Assessment
1.10-201	Potential Hazards from Construction Activities
1.10-202	Hazards During Construction Activities
1.10-203	Managerial and Administrative Construction Controls

LIST OF FIGURES

Number	Title
1.1-201	Site Location Map
1.1-202	Site Layout
1.2-201	Annex Building General Arrangement Plan at Elevation 100’ – 0” and 107’ – 2”

CHAPTER 1

INTRODUCTION AND GENERAL DESCRIPTION OF THE PLANT

1.1 INTRODUCTION

This section of the referenced DCD is incorporated by reference with the following departures and/or supplements.

The Vogtle ESPA SSAR is hereby incorporated by reference into the COL application as described in Section 1.6.

Add the following paragraphs to the end of DCD Section 1.1

STD SUP 1.1-1 This Final Safety Analysis Report (FSAR) incorporates the Design Control Document (DCD) (as identified in Table 1.6-201) for a simplified passive advanced light water reactor plant provided by Westinghouse Electric Company, the entity originally sponsoring and obtaining the AP1000 design certification documented in 10 CFR Part 52, Appendix D. Throughout this FSAR, the “referenced DCD” is the AP1000 DCD submitted by Westinghouse as Revision 16 including any supplemental material as identified in Table 1.6-201. Unless otherwise specified, reference to the DCD refers to Tier 2 information.

VEGP SUP 1.1-2 This Final Safety Analysis Report (FSAR) is hereby submitted under Section 103 of the Atomic Energy Act by the Southern Nuclear Operating Company, Inc. (SNC) to the NRC as part of the application for two Class 103 combined licenses (COLs) to construct and operate two nuclear power plants under the provisions of 10 CFR Part 52 Subpart C.

1.1.1 PLANT LOCATION

VEGP COL 2.1-1 Add the following text at the beginning of DCD Subsection 1.1.1:

VEGP Units 3 and 4 are located on a 3,169-acre coastal plain bluff on the southwest side of the Savannah River in eastern Burke County, Georgia. The site is approximately 30 river miles above the U.S. 301 bridge and directly across the river from the Department of Energy's Savannah River Site (Barnwell County, South Carolina). The VEGP site is approximately 15 miles east-northeast of Waynesboro, Georgia and 26 miles southeast of Augusta, Georgia. It is also

about 100 miles from Savannah, Georgia and 150 river miles from the mouth of the Savannah River.

Figure 1.1-201 identifies the site location. Figure 1.1-202 shows the plant arrangement within the site.

1.1.5 SCHEDULE

Add the following text to the end of DCD Subsection 1.1.5:

VEGP COL 1.1-1 Table 1.1-203 displays the anticipated schedule for construction and operation of two AP1000 units at the VEGP site. A site-specific construction plan and startup schedule will be provided to the NRC after issuance of the COL and when a positive decision has been made to construct the plant.

1.1.6.1 Regulatory Guide 1.70

Add the following text to the end of DCD Subsection 1.1.6.1.

STD SUP 1.1-6 This FSAR generally follows the AP1000 DCD organization and numbering. Some organization and numbering differences are adopted where necessary to include additional material, such as additional content identified in Regulatory Guide 1.206. Any exceptions are identified with the appropriate left margin annotation as discussed in Subsection 1.1.6.3 and Table 1.1-202.

1.1.6.3 Text, Tables and Figures

Add the following text to the end of DCD Subsection 1.1.6.3.

STD SUP 1.1-3 Table 1.1-202 describes the left margin annotations used in this document to identify departures, supplementary information, COL items, and conceptual design information.

FSAR tables, figures, and references are numbered in the same manner as the DCD, but the first new FSAR item is numbered as 201, the second 202, the third

203, and consecutively thereafter. When a table, figure, or reference in the DCD is changed, the change is appropriately left margin annotated as identified above.

New appendices are included in the FSAR with double letter designations following the pertinent chapter (e.g., 12AA).

When it provides greater contextual clarity, an existing DCD table or figure is revised by adding new information to the table or figure and replacing the DCD table or figure with a new one in the FSAR. In this instance, the revised table or figure clearly identifies the information being added, and retains the same numbering as in the DCD, but the table or figure number is revised to end with the designation "R" to indicate that the table or figure has been revised and replaced. For example, revised "Table 4.2-1" would become "Table 4.2-1R." New and revised tables and figures are labeled in the left margin as described in Table 1.1-202.

1.1.6.5 Proprietary Information

Insert the following text to the end of DCD Subsection 1.1.6.5.

STD SUP 1.1-4 Some portions of this FSAR may be considered as proprietary, personal, or sensitive and withheld from public disclosure pursuant to 10 CFR 2.390 and Regulatory Issue Summary (RIS) 2005-026. Such material is clearly marked and the withheld material is separately provided for NRC review.

1.1.6.6 Acronyms

Add the following text to the end of DCD Subsection 1.1.6.6.

VEGP SUP 1.1-5 Table 1.1-201 provides a list of acronyms used in the VEGP Units 3 and 4 FSAR in addition to the acronyms identified in DCD Table 1.1-1 and system designation identified in Table 1.7-201 and DCD Table 1.7-2.

1.1.7 COMBINED LICENSE INFORMATION

Add the following after DCD Subsection 1.1.7.

VEGP COL 1.1-1 This COL item is addressed in Subsection 1.1.5.

VEGP SUP 1.1-5

Table 1.1-201 (Sheet 1 of 6)
Acronyms Used in the FSAR

Acronym	Definition
ACSR	Aluminum Conductor Steel Reinforced
AD	Air Diffuser
ADAMS	Agencywide Documents Access and Management System
AE	Architect Engineer
AFW	Auxiliary Feedwater
ALOHA	Areal Location of Hazardous Atmosphere
AR	Air Removal
ASS	Auxiliary Steam System
AWWA	American Water Works Association
BD	Bay Door
BDS	Blowdown System
BP	Blowout Panel
BPO	Bulk Power Operations
B&PVC	Boiler and Pressure Vessel Code
BR	Breathing Rate
BWR	Boiling Water Reactor
CAM	Continuous Air Monitor
CAPCO	Corrective Action Program Coordinator
CDI	Conceptual Design Information
CEO	Chief Executive Officer
CFO	Chief Financial Officer
CFS	Chemical Feed System
CN	Curve Number
CNO	Chief Nuclear Officer
COL	Combined License
COLA	Combined License Application
CP	Construction Phase
CR	Control Room
CS	Containment Shell
DAC	Derived Air Concentration
DAW	Dry Active Waste
DC	Direct Current

VEGP SUP 1.1-5

Table 1.1-201 (Sheet 2 of 6)
Acronyms Used in the FSAR

Acronym	Definition
DG	Diesel Generator
DRAP	Design Reliability Assurance Program
EAB	Exclusion Area Boundary
EAL	Emergency Action Level
EBR	Experimental Breeder Reactor
ECCS	Emergency Core Cooling System
ENS	Emergency Notification System
EOF	Emergency Operations Facility
EOP	Emergency Operating Procedures
EP	Emergency Planning
EPC	Engineering, Procurement & Construction
EP-ITAAC	Emergency Planning ITAAC
EQ	Environmental Qualification
EQMEL	EQ Master Equipment List
ERO	Emergency Response Organization
ESP	Early Site Permit
ESPA SSAR	Early Site Permit Application Site Safety Analysis Report
EVP	Executive Vice President
FAC	Flow Accelerated Corrosion
FERC	Federal Energy Regulatory Commission
FFD	Fitness For Duty
FHA	Fire Hazards Analysis
FMEA	Failure Mode Effects Analysis
FNP	Farley Nuclear Plant
FPS	Fire Protection System
FSAR	Final Safety Analysis Report
FSER	Final Safety Evaluation Report
FWS	Feedwater System
GCC	Georgia Transmission Control Center
GI-LLI	Gastrointestinal Tract–Lower Large Intestine
GPC	Georgia Power Company
GSU	Generator Step-up (Transformer)
HCLPF	High Confidence, Low Probability of Failure

VEGP SUP 1.1-5

Table 1.1-201 (Sheet 3 of 6)
Acronyms Used in the FSAR

Acronym	Definition
HNP	Hatch Nuclear Plant
HP	Health Physics
HV	High Voltage
IDLH	Immediately Dangerous to Life and Health
IIS	Incore Instrumentation System
INPO	Institute of Nuclear Plant Operations
ISFSI	Independent Spent Fuel Storage Installation
ITA	Inspections, Tests, Analyses
ITP	Initial Test Program
JOG	Joint Owners Group
JPM	Job Performance Measure
JTWG	Joint Test Working Group
LCO	Limiting Condition for Operation
LFL	Lower Flammability Limit
LLC	Limited Liability Corporation
LLW	Low Level Waste
LTOP	Low Temperature Overpressure Protection
MSL	Mean Sea Level
MSPI	Mitigating Systems Performance Indicator
NE	North East
NESC	National Electric Safety Code
ND	Nuclear Development
NDCT	Natural Draft Cooling Tower
NDE	Non-destructive Examination
NDQA	Nuclear Development Quality Assurance
NERC	North American Electric Reliability Corporation
NLO	Non-Licensed Operator
NPDES	National Pollutant Discharge Elimination System
NUS	Nuclear Utility Services
OBE	Operating Basis Earthquake
ODCM	Offsite Dose Calculation Manual
OE	Operating Experience
OJT	On-the-Job Training

VEGP SUP 1.1-5

Table 1.1-201 (Sheet 4 of 6)
Acronyms Used in the FSAR

Acronym	Definition
OM	Operations and Maintenance
OSC	Operations Support Center
PC	Permit Condition
PCC	Power Coordination Center
PCP	Process Control Program
PGS	Plant Gas System
PM	Project Manager
PMF	Probable Maximum Flood
PMP	Probable Maximum Precipitation
PMWP	Probable Maximum Winter Precipitation
PNNL	Pacific Northwest National Laboratory
PORV	Power Operated Relief Valve
PR	Proposed Revision
PS-ITAAC	Physical Security ITAAC
PV	Plant Vent
PT&O	Plant Test and Operations
PVC	Polyvinyl Chloride
PWS	Potable Water System
PZR	Pressurizer
QAPD	Quality Assurance Program Description
QMS	Quality Management System
RAT	Reserve Auxiliary Transformer
RCA	Radiological Controlled Area
RCP	Reactor Coolant Pump
RCPB	Reactor Coolant Pressure Boundary
RHR	Residual Heat Removal
RIS	Regulatory Issue Summary
RO	Reactor Operator
RP	Radiation Protection
RPS	Reactor Protection System
RPV	Reactor Pressure Vessel
RS	Review Standard
RT	Radiography Techniques

VEGP SUP 1.1-5

Table 1.1-201 (Sheet 5 of 6)
Acronyms Used in the FSAR

Acronym	Definition
RTDP	Revised Thermal Design Procedure
SAMDA	Severe Accident Mitigation Design Alternatives
SAMG	Severe Accident Management Guidance
SAR	Safety Analysis Report
SAT	Systematic Approach to Training
SBAA	Southern Balancing Authority Area
SC	South Carolina
SCBA	Self Contained Breathing Apparatus
SCEG	South Carolina Electric and Gas
SCS	Southern Company Services
SCT	Southern Company Transmission
SDP	Significance Determination Process
SDS	Sanitary Drains System
SERC	South Eastern Reliability Corporation
SGMP	Steam Generator Management Program
SGS	Steam Generation System
SGTR	Steam Generator Tube Rupture
SGW/L	Steam Generator Water Leg
Shaw	Shaw Stone & Webster Nuclear Services
SNC	Southern Nuclear Operating Company
SRO	Senior Reactor Operator
SRP	Standard Review Plan
SSC	Seismic Source Characterization
SSC(s)	Structure(s), System(s), and Component(s)
SS-ITAAC	Site-Specific ITAAC
STA	Shift Technical Advisor
SV	Steam Vent
SVP	Senior Vice President
TBD	To Be Determined
TEDE	Total Effective Dose Equivalent
TLD	Thermoluminescent Dosimeter
TNT	Trinitrotoluene
TSO	Transmission System Operator

VEGP SUP 1.1-5

Table 1.1-201 (Sheet 6 of 6)
Acronyms Used in the FSAR

Acronym	Definition
TSP	Transmission System Provider
TtNUS	Tetra Tech NUS, Inc.
UAT	Unit Auxiliary Transformer
UFL	Upper Flammability Limit
UFSAR	Updated Final Safety Analysis Report
UT	Ultrasonic Techniques
V & V	Verification and Validation
VEGP	Vogtle Electric Generating Plant
VP	Vice President
WAC	Waste Acceptance Criteria
WEC	Westinghouse Electric Company
WMA	Wildlife Management Area

Table 1.1-202 (Sheet 1 of 2)
Left Margin Annotations

	MARGIN NOTATION	DEFINITION AND USE
STD SUP 1.1-3	STD DEP X.Y.Z-#	FSAR information that departs from the generic DCD and is common for parallel applicants. Each Standard Departure is numbered separately at an appropriate level, e.g., STD DEP 9.2-1, or STD DEP 9.2.1-1
	NPP DEP X.Y.Z-#	FSAR information that departs from the generic DCD and is plant specific. NPP is replaced with a plant specific identifier. Each Departure item is numbered separately at an appropriate subsection level, e.g., NPP DEP 9.2-2, or NPP DEP 9.2.1-2
	STD COL X.Y-#	FSAR information that addresses a DCD Combined License Information item and is common to other COL applicants. Each COL item is numbered as identified in DCD Table 1.8-2 and FSAR Table 1.8-202, e.g., STD COL 4.4-1, or STD COL 19.59.10.5-1
	NPP COL X.Y-#	FSAR information that addresses a DCD Combined License Information item and is plant specific. NPP is replaced with a plant specific identifier. Each COL item is numbered as identified in DCD Table 1.8-2 and FSAR Table 1.8-202, e.g., NPP COL 4.4-1, or NPP COL 19.59.10.5-1
	NPP CDI or STD CDI	FSAR information that addresses DCD Conceptual Design Information (CDI). Replacement design information is generally plant specific; however, some may be common to other applicants. NPP is replaced with a plant specific identifier. STD is used if it is common. CDI information replacements are not numbered.

Table 1.1-202 (Sheet 2 of 2)
Left Margin Annotations

STD SUP 1.1-5	STD SUP X.Y-#	FSAR information that supplements the material in the DCD and is common to other COL applicants. Each SUP item is numbered separately at an appropriate subsection level, e.g., STD SUP 1.10-1, or STD SUP 9.5.1-1
	NPP SUP X.Y-#	FSAR information that supplements the material in the DCD and is plant specific. NPP is replaced with a plant specific identifier. Each SUP item is numbered separately at an appropriate subsection level, e.g., NPP SUP 3.10-1, or NPP SUP 9.2.5-1
	DCD	FSAR information that duplicates material in the DCD. Such information from the DCD is repeated in the FSAR only in instances determined necessary to provide contextual clarity.
VEGP SUP 1.1-8	NPP ESP PC#	FSAR information that addresses an ESP Permit Condition. NPP is replaced with a plant specific identifier. An ESP Permit Condition is numbered as identified in the applicable ESP.
	NPP ESP VAR X.Y-#	A request for an ESP Variance. NPP is replaced with a plant specific identifier. Each ESP Variance is numbered based on the applicable section down to the ESP Application X.Y.Z level.
	NPP ESP COL X.Y-#	FSAR information that addresses an ESP COL action item. NPP is replaced with a plant specific identifier. An ESP COL information item is numbered as identified in the applicable ESP down to the X.Y level.

VEGP COL 1.1-1

Table 1.1-203
Anticipated Schedule for Construction and Operation of Two AP1000 Units at the VEGP Site

Activity	Start(1)	Finish(1)	Duration
	UNIT 3		
Early Procurement Activities	2nd Q 2008	--	--
Site Preparation	3rd Q 2008	3rd Q 2011	36 Months
Commence Construction (Safety-related activities)	4th Q 2009 (LWA)		--
Fuel Load, Commence Start-Up	4th Q 2015	2nd Q 2016	6 Months
Commercial Operation	April 2016		
	UNIT 4		
Early Procurement Activities	2nd Q 2008	--	--
Site Preparation	3rd Q 2008	3rd Q 2012	48 Months
Commence Construction (Safety-related activities)	4th Q 2010 (LWA)		--
Fuel Load, Commence Start-Up	4th Q 2016	2nd Q 2017	6 Months
Commercial Operation	April 2017		

Notes:

(1) Activities that do not indicate a start or finish date are milestones, and represent the anticipated commencement (start) or completion (finish) of the activity.

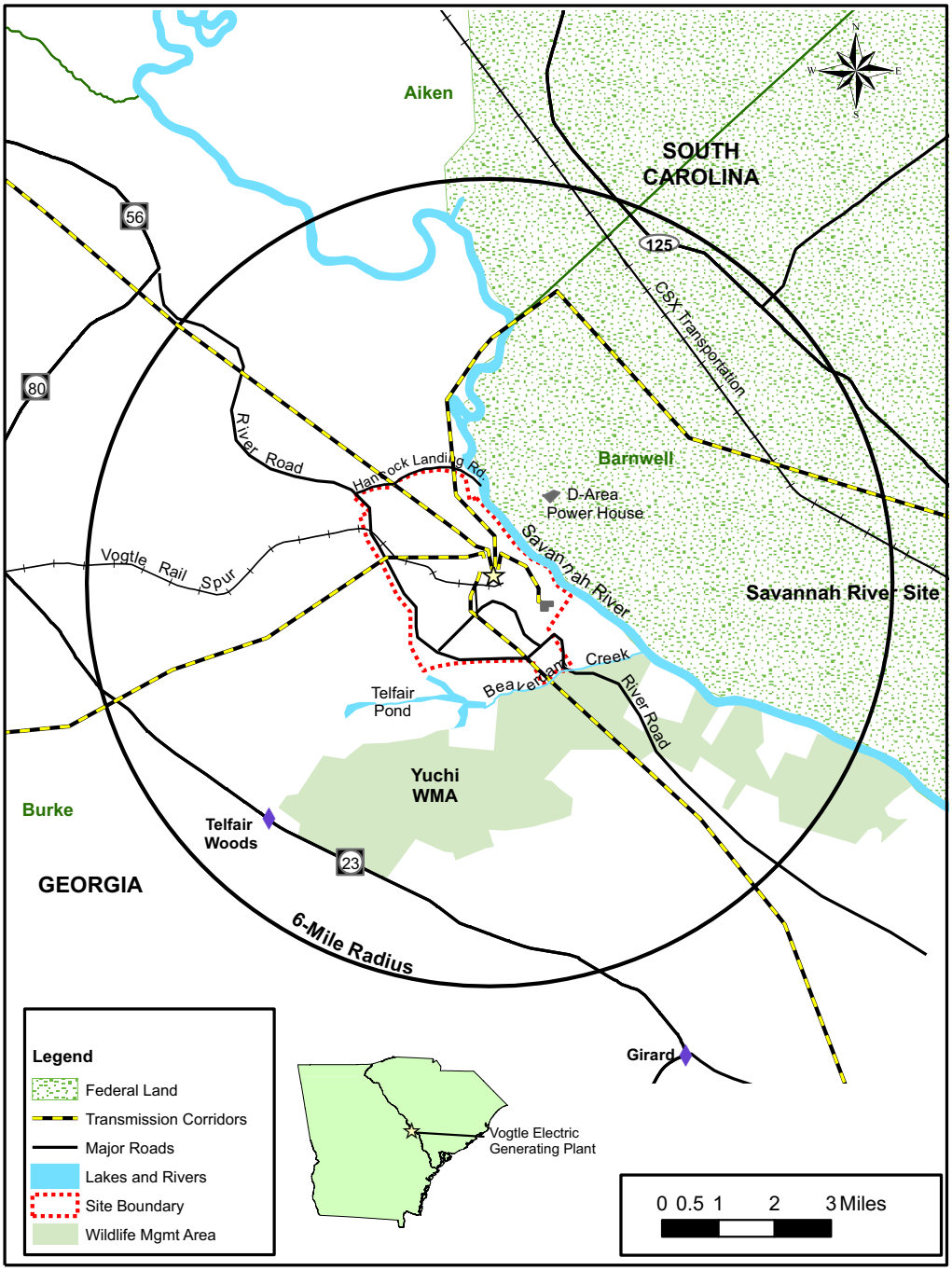

VEGP COL 2.1-1

Figure 1.1-201
Site Location Map

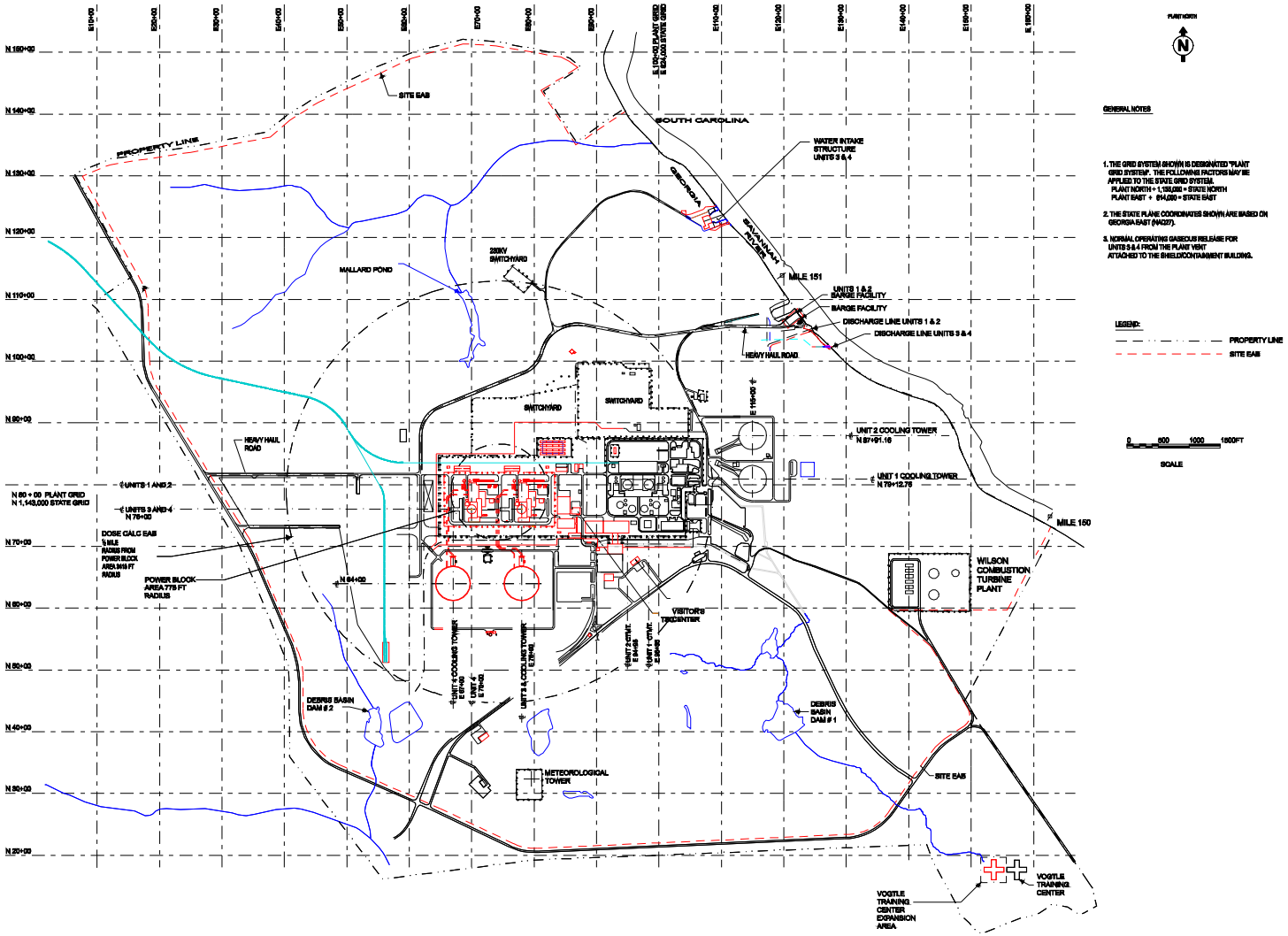

VEGP COL 2.1-1

Figure 1.1-202
Site Layout

1.2 GENERAL PLANT DESCRIPTION

This section of the referenced DCD is incorporated by reference with the following departures and/or supplements.

This section of the referenced ESPA SSAR is incorporated by reference with no variances or supplements.

1.2.2 SITE DESCRIPTION

In Subsection 1.2.2 of the DCD, replace the information entitled “Site Plan” with the following text.

VEGP COL 2.1-1 **Site Plan**

The VEGP site plan is described in the referenced ESPA SSAR.

The site layout is shown in Figure 1.1-202. Principal structures, facilities, and roads are illustrated. Orientation of the two AP1000 units is such that “plant north” corresponds with true north. Plant elevation in the DCD is 100 feet, whereas the plant elevation for VEGP is 220 feet; therefore DCD elevations are to be increased by 120 feet to be actual site elevations.

The river intake for VEGP Units 3 and 4 withdraw makeup water from the Savannah River. The intake system is located upstream of the river intake of VEGP Units 1 and 2. Makeup water is pumped directly to the cooling tower basin. Cooling tower circulating water pump complexes are located south of the reactors. The intake structure is located at the end of a canal, and is situated northeast of the reactors.

The transformer area is located immediately adjacent to and north of the turbine building. The unit auxiliary transformers (UAT), the reserve auxiliary transformers (RAT), and the generator step-up transformers (GSU) are located in this area. The main switchyard area is located adjacent to the transformer area.

An administrative building is located east of the cooling tower basins. The building houses management, administration, and support functions for the site. The training and simulator building is located southeast of the reactor complex, but within the site boundary.

1.2.3 PLANT ARRANGEMENT DESCRIPTION

Add the following information at the end of DCD Subsection 1.2.3.

VEGP DEP 18.8-1 Figure 1.2-201 replaces DCD Figure 1.2-18 to reflect the relocation of the Operations Support Center.

Security-Related Information — Withhold Under 10 CFR 2.390(d)
(See Part 9 of this COL Application)

(Note: This figure replaces DCD Figure 1.2-18.)

VEGP DEP 18.8-1

Figure 1.2-201
Annex Building General Arrangement Plan at Elevation 100'-0" and 107'-2"

1.3 COMPARISONS WITH SIMILAR FACILITY DESIGNS

This section of the referenced DCD is incorporated by reference with no departures or supplements.

1.4 IDENTIFICATION OF AGENTS AND CONTRACTORS

This section of the referenced DCD is incorporated by reference with the following departures and/or supplements.

This section of the referenced ESPA SSAR is incorporated by reference with the following variances and/or supplements.

1.4.1 APPLICANT – PROGRAM MANAGER

Add the following paragraphs as the first two paragraphs in DCD Subsection 1.4.1:

VEGP SUP 1.4-1 The Southern Nuclear Operating Company, Inc. (SNC) is the non-owner applicant for a Combined License for the VEGP and will be the constructor and licensed operator of Units 3 and 4. The owner licensees are as follows: Georgia Power Company, Oglethorpe Power Corporation, Municipal Electric Authority of Georgia, and the City of Dalton, Georgia, an incorporated municipality in the State of Georgia acting by and through its Board of Water, Light and Sinking Fund Commissioners (Dalton Utilities). SNC is a wholly-owned subsidiary of Southern Company.

SNC was formed for the purpose of operating nuclear facilities owned by other Southern Company subsidiaries. SNC operates the Edwin I. Hatch Nuclear Plant, Units 1 and 2, the Vogtle Electric Generating Plant, Units 1 and 2, and the Joseph M. Farley Nuclear Plant Units 1 and 2. The combined electric generation of the three plants is in excess of 5,900 MWe.

Add the following paragraphs to the end of DCD Subsection 1.4.1:

VEGP SUP 1.4-2 As of the submittal date of the COLA, no contract for the Engineering, Procurement and Construction (EPC) of the facilities has been fully executed, and as a result the identity of the EPC Contractor has not been finally determined. On March 19, 2008, SNC's Principal, GPC, and a Consortium comprised of Westinghouse Electric Company, LLC and Stone & Webster, Inc. and Toshiba Corporation, as guarantor of the Consortium, executed a non-binding letter of intent regarding the EPC Contract for VEGP Units 3 and 4. Accordingly, it is assumed that the Consortium of Westinghouse and Stone & Webster (also referred to herein as Shaw Stone & Webster) will act as the Contractors for the engineering, procurement, and construction of the facilities. Because no contract with the AP1000 provider, architect-engineer, or constructor has been executed at the time of the submittal to this COLA, a License Condition is presented in Part 10 of this application to provide more information on those relationships once they are finalized.

Add the following new subsection after DCD Subsection 1.4.2.7:

VEGP SUP 1.4-3 1.4.2.8 Other Contractors

Add ESPA SSAR Section 1.4 to subsection 1.4.2.8 with the following new first sentence prior to the first paragraph:

The following contractors also assisted in the preparation of the COL application.

1.5 REQUIREMENTS FOR FURTHER TECHNICAL INFORMATION

This section of the referenced DCD is incorporated by reference with no departures or supplements.

This section of the referenced ESPA SSAR is incorporated by reference with no variances or supplements.

1.6 MATERIAL REFERENCED

This section of the referenced DCD is incorporated by reference with the following departures and/or supplements.

Add the following text to the end of DCD Section 1.6.

STD SUP 1.6-1 Table 1.6-201 provides a list of the various technical documents incorporated by reference in the FSAR in addition to those technical documents incorporated by reference in the AP1000 DCD.

VEGP SUP 1.6-2 The Vogtle Early Site Permit Application (ESPA) Site Safety Analysis Report (SSAR) is incorporated by reference into this Combined License Application (COLA) Final Safety Analysis Report (FSAR) with variances and/or supplements as noted. Table 1.6-202, Cross Reference of SSAR Sections Incorporated by Reference into FSAR Sections, provides information regarding incorporation of SSAR information into the FSAR.

Reference to the ESPA SSAR is understood to mean Revision 4, as submitted by Southern Nuclear Operating Company (SNC) on March 31, 2008.

Table 1.6-201
Additional Material Referenced

	Author/ Report Number	Title	Revision	FSAR Section	Document Transmittal	ADAMS Accession Number
VEGP SUP 1.6-2	VEGP ESPA SSAR	Vogtle Early Site Permit Application Site Safety Analysis Report	4	Table 1.6-202	March 2008	TBD
STD SUP 1.6-1	Westinghouse/ APP-GW-GL-700	AP1000 Design Control Document	16	All	May 2007	ML071580939
	Westinghouse/ APP-GW-GLR-134	AP1000 DCD Impacts to Support COLA Standardization	4	All	March 2008	TBD
	NEI 07-08	Generic FSAR Template Guidance for Ensuring That Occupational Radiation Exposures Are As Low As Is Reasonably Achievable (ALARA)	0	12.1	September 2007	ML072600383
	NEI 07-03	Generic FSAR Template Guidance for Radiation Protection Program Description	3	Appendix 12AA	October 2007	ML072780410
	NEI 06-13A	Technical Report on a Template for an Industry Training Program Description	0	13.2	October 2007	ML072920293
	NEI 07-02A	Generic FSAR Template Guidance for Maintenance Rule Program Description for Plants Licensed Under 10 CFR Part 52	0	17.6	March 2008	TBD

(-A) Denotes NRC approved document. Other listed documents are under NRC review.

VEGP SUP 1.6-2

Table 1.6-202 (Sheet 1 of 3)
Cross Reference of ESPA SSAR Sections Incorporated by Reference into FSAR Sections

	SSAR Section	SSAR Section Title	Corresponding FSAR Section
	1.1	Introduction	SSAR Section 1.1 provides general information related to the ESP proceeding, and is not applicable to any particular FSAR section.
	1.2	General Site Description	Section 1.1.1 Plant Location
	1.3	Site Characteristics, Design Parameters, and Site Interface Values	Section 2.0, Site Characteristics
	1.4	Identification of Agents and Contractors	Section 1.4, Identification of Agents and Contractors
	1.5	Requirements for Further Technical Information	Section 1.5, Requirements for Further Technical Information
VEGP ESP VAR 1.6-1	1.6	Material Incorporated by Reference	This ESPA SSAR section is not Incorporated by Reference into the FSAR. This section of the ESPA SSAR includes a reference to Revision 15 of the AP1000 DCD and additional Westinghouse technical reports that have been superseded by the referenced DCD. COLA Part 7 requests a variance for this ESPA section.
	1.7	Drawings and Other Detailed Information	Section 1.7, Drawings and Other Detailed Information
	1.8	Conformance to NRC Regulations and Regulatory Guidance	Section 1.9, Compliance With Regulatory Criteria.
	2.1	Geography and Demography	Section 2.1, Geography and Demography
	2.2	Identification of Potential Hazards in Site Vicinity	Section 2.2, Nearby Industrial, Transportation, and Military Facilities
	2.3	Meteorology	Section 2.3, Meteorology

VEGP SUP 1.6-2

Table 1.6-202 (Sheet 2 of 3)
Cross Reference of ESPA SSAR Sections Incorporated by Reference into FSAR Sections

	SSAR Section	SSAR Section Title	Corresponding FSAR Section
	2.4	Hydrologic Engineering	Section 2.4, Hydrologic Engineering
	2.5	Geology, Seismology, and Geotechnical Engineering	Section 2.5, Geology, Seismology, and Geotechnical Information
	3.5.1.6	Aircraft Hazards	Section 3.5.1.6, Aircraft Hazards
VEGP ESP VAR 1.6-2	3.8.5	Foundations	This ESPA SSAR subsection is Incorporated by Reference into FSAR Subsection 3.8.5.1 with the exception of the first two paragraphs. These paragraphs include a reference to Revision 15 of the AP1000 DCD and additional Westinghouse technical reports that have been superseded by the referenced DCD. COLA Part 7 requests a variance for this ESPA section.
	11.2.3	Liquid Radioactive Releases	Section 11.2.3.5, Estimated Doses
	11.3.3	Gaseous Radioactive Releases	Section 11.3.3.4, Estimated Doses
	13.3	Emergency Planning	Section 13.3, Emergency Planning
	13.6	Industrial Security	Section 13.6, Security
	13.7	Fitness for Duty	Section 13.7, Fitness for Duty
VEGP ESP VAR 1.6-3	15	Accident Analyses	This ESPA SSAR chapter is not Incorporated by Reference into the FSAR. This chapter of the ESPA SSAR provides accident release information that has been superseded by the referenced DCD. COLA Part 7 requests a variance for this ESPA section.

VEGP SUP 1.6-2

Table 1.6-202 (Sheet 3 of 3)
Cross Reference of ESPA SSAR Sections Incorporated by Reference into FSAR Sections

SSAR Section	SSAR Section Title	Corresponding FSAR Section
17	Quality Assurance	This ESPA SSAR chapter is not Incorporated by Reference into the FSAR. The SNC Nuclear Development Quality Assurance Manual, provided as Appendix 17.1A of the ESPA SSAR, is now provided in COLA Part 11.

1.7 DRAWINGS AND OTHER DETAILED INFORMATION

This section of the referenced DCD is incorporated by reference with the following departures and/or supplements.

This section of the referenced ESPA SSAR is incorporated by reference with the following variances and/or supplements.

1.7.2 PIPING AND INSTRUMENTATION DIAGRAMS

Add the following text to the end of DCD Subsection 1.7.2.

VEGP SUP 1.7-1 Table 1.7-201 contains a list of piping and instrumentation diagrams (P&IDs) or system diagrams and the corresponding FSAR figure numbers that supplement the DCD.

VEGP SUP 1.7-1

Table 1.7-201
AP1000 System Designators and System Drawings

Designator	System	FSAR Section	FSAR Figure
CWS	Circulating Water System	10.4.5	10.4-201
RWS	Raw Water System	9.2.11	9.2-201
ZBS	Offsite Power System One-Line Diagram	8.2	8.2-201
ZBS	Switchyard General Arrangement	8.2	8.2-202

1.8 INTERFACES FOR STANDARD DESIGN

This section of the referenced DCD is incorporated by reference with the following departures and/or supplements.

Add the following paragraphs to the end of DCD Section 1.8.

VEGP SUP 1.8-1 Departures from the referenced DCD are summarized in Table 1.8-201. Table 1.8-201 lists each departure and the FSAR section or subsection impacted.

Variances from the referenced ESPA are idenified in Table 1.6-202.

VEGP SUP 1.8-2 DCD Table 1.8-2 presents Combined License Information for the AP1000. Items requiring COL Applicant or COL Holder action are presented in Table 1.8-202. FSAR section(s) addressing these COL items are tabulated in this table. COL Holder items listed in Table 1.8-202 are regulatory commitments of the COL Holder and these actions will be completed as specified in the appropriate section of the referenced DCD. Completion of these COL Holder items is the subject of a proposed License Condition as presented in a separate document submitted as part of this COL application.

VEGP SUP 1.8-3 Table 1.8-203 lists the ESP COL action items and the corresponding FSAR section(s) that address these COL action items. ESP COL action items that are not addressed in the FSAR are not identified on Table 1.8-203. These ESP COL action items will be resolved through the ESP proceedings.

ESP permit conditions are continuing to be addressed through the ESP review process, and thus, are not addressed or identified in the FSAR.

VEGP SUP 1.8-4 Demonstrations that the VEGP Units 3 and 4 site characteristics, design parameters, and site interface values fall within the site-related parameters for which the AP1000 was designed are provided in FSAR Section 2.0.

VEGP SUP 1.8-1

Table 1.8-201
Summary of FSAR Departures from the DCD

Departure Number	Departure Description Summary	FSAR Section or Subsection
VEGP DEP 1.1-1	An administrative departure is established to identify instances where the renumbering of FSAR sections is necessary to effectively include content consistent with Regulatory Guide 1.206, as well as NUREG-0800.	2.1.1 2.1.4 2.2.1 2.2.4 2.4.1 2.4.15 2.5 2.5.7 9.2.11 9.2.12 9.2.13 9.5.1.8 9.5.1.9 13.1 13.3.6 13.5 13.7 17.5 17.6 17.7 17.8
VEGP DEP 3.4-1	An alternate waterproofing system for the below grade portions of seismic Category I structures is presented.	3.4.1
VEGP DEP 9.2-1	The water source to the Potable Water System does not require filtration.	9.2.5.3
VEGP DEP 18.8-1	At VEGP, the Technical Support Center (TSC) is not located in the control support area (CSA) as identified in DCD Subsection 18.8.3.5; the TSC location is as described in the Emergency Plan. Additionally, the Operations Support Center (OSC) is also being moved from the location identified in DCD Subsections 18.8.3.6 and 12.5.2.2 and as identified on DCD figures in Subsections 1.2 and 12.3, and Appendix 9A; the OSC location is as described in the Emergency Plan.	18.8.3.5 18.8.3.6 12.5.2.2 12.3 9A 1.2 13.3.8

VEGP SUP 1.8-2

Table 1.8-202 (Sheet 1 of 17)
COL Item Tabulation

COL ITEM	SUBJECT	DCD SUBSECTION	FSAR SECTION(S)	COL APPLICANT (A), HOLDER (H) OR BOTH (B)
1.1-1	Construction and Startup Schedule	1.1.7	1.1.5 1.1.7	A
1.9-1	Regulatory Guide Conformance	1.9.1.5	1.9.1 1.9.1.1 1.9.1.2 1.9.1.3 1.9.1.4 1.9.1.5 Appendix 1A Appendix 1AA	A
1.9-2[(a)]	Bulletins and Generic Letters	1.9.5.5	1.9.5.5	A
1.9-3[(a)]	Unresolved Safety Issues and Generic Safety Issues	Table 1.9-2 1.9.4.1	1.9.4.1 1.9.4.2.3	A
2.1-1	Geography and Demography	2.1.1	1.1.1 1.2.2 2.1.4	A
2.2-1	Identification of Site-specific Potential Hazards	2.2.1	2.2.3.2.3.1 2.2.3.2.3.2 2.2.3.3 2.2.3.4 2.2.4	A
2.3-1	Regional Climatology	2.3.6.1	2.3.6.1	A

VEGP SUP 1.8-2

Table 1.8-202 (Sheet 2 of 17)
COL Item Tabulation

COL ITEM	SUBJECT	DCD SUBSECTION	FSAR SECTION(S)	COL APPLICANT (A), HOLDER (H) OR BOTH (B)
2.3-2	Local Meteorology	2.3.6.2	2.3.6.2	A
2.3-3	Onsite Meteorological Measurements Program	2.3.6.3	2.3.3.4 2.3.6.3	A
2.3-4	Short-Term Diffusion Estimates	2.3.6.4	2.3.4 2.3.6.4 15.6.5.3.7.3 15A.3.3	A
2.3-5	Long-Term Diffusion Estimates	2.3.6.5	2.3.5 2.3.6.5	A
2.4-1	Hydrological Description	2.4.1.1	2.4.15.1	A
2.4-2	Floods	2.4.1.2	2.4.2 2.4.10 2.4.15.2	A
2.4-3	Cooling Water Supply	2.4.1.3	2.4.15.3	A
2.4-4	Groundwater	2.4.1.4	2.4.15.4	A
2.4-5	Accidental Release of Liquid Effluents into Ground and Surface Water	2.4.1.5	2.4.15.5	A
2.4-6	Flood Protection Emergency Operation Procedures	2.4.1.6	2.4.14 2.4.15.6	A
2.5-1	Basic Geologic and Seismic Information	2.5.1	2.5.7.1	A

VEGP SUP 1.8-2

Table 1.8-202 (Sheet 3 of 17)
COL Item Tabulation

COL ITEM	SUBJECT	DCD SUBSECTION	FSAR SECTION(S)	COL APPLICANT (A), HOLDER (H) OR BOTH (B)
2.5-2	Site Seismic and Tectonic Characteristics Information	2.5.2.1	2.5.7.2	A
2.5-3	Geoscience Parameters	2.5.2.3	2.5.7.3	A
2.5-4	Surface Faulting	2.5.3	2.5.7.4	A
2.5-5	Site and Structures	2.5.4.6.1	2.5.7.5	A
2.5-6	Properties of Underlying Materials	2.5.4.6.2	2.5.7.6	A
2.5-7	Excavation and Backfill	2.5.4.6.3	2.5.7.7	A
2.5-8	Ground Water Conditions	2.5.4.6.4	2.5.7.8	A
2.5-9	Liquefaction Potential	2.5.4.6.5	2.5.7.9	A
2.5-10	Bearing Capacity	2.5.4.6.6	2.5.7.10	A
2.5-11	Earth Pressures	2.5.4.6.7	2.5.7.11	A
2.5-12	Static and Dynamic Stability of Facilities	2.5.4.6.9	2.5.7.12	A
2.5-13	Subsurface Instrumentation	2.5.4.6.10	2.5.7.13	A
2.5-14	Stability of Slopes	2.5.5	2.5.7.14	A
2.5-15	Embankments and Dams	2.5.6	2.5.7.15	A
2.5-16	Settlement of Nuclear Island	2.5.4.6.11	2.5.7.16	A

VEGP SUP 1.8-2

Table 1.8-202 (Sheet 4 of 17)
COL Item Tabulation

COL ITEM	SUBJECT	DCD SUBSECTION	FSAR SECTION(S)	COL APPLICANT (A), HOLDER (H) OR BOTH (B)
3.3-1	Wind and Tornado Site Interface Criteria	3.3.3	3.3.1.1 3.3.2.1 3.3.2.3 3.3.3	A
3.4-1	Site-Specific Flooding Hazards Protective Measures	3.4.3	3.4.1.3 3.4.3	A
3.5-1	External Missile Protection Requirements	3.5.4	3.5.1.5 3.5.4	A
3.6-1	Pipe Break Hazards Analysis	3.6.4.1	3.6.4.1	H
3.6-4	Primary System Inspection Program for Leak-Before-Break Piping	3.6.4.4	3.6.4.4	A
3.7-1	Seismic Analysis of Dams	3.7.5.1	3.7.2.12 3.7.5.1	A
3.7-2	Post-Earthquake Procedures	3.7.5.2	3.7.4.4 3.7.5.2	A
3.7-3	Seismic Interaction Review	3.7.5.3	3.7.5.3	H
3.7-4	Reconciliation of Seismic Analyses of Nuclear Island Structures	3.7.5.4	3.7.5.4	H
3.7-5	Location of Free-Field Acceleration Sensor	3.7.5.5	3.7.4.2.1 3.7.5.5	A
3.9-2	Design Specification and Reports	3.9.8.2	3.9.8.2	H

VEGP SUP 1.8-2

Table 1.8-202 (Sheet 5 of 17)
COL Item Tabulation

COL ITEM	SUBJECT	DCD SUBSECTION	FSAR SECTION(S)	COL APPLICANT (A), HOLDER (H) OR BOTH (B)
3.9-3	Snubber Operability Testing	3.9.8.3	3.9.3.4.4 3.9.8.3	A
3.9-4	Valve Inservice Testing	3.9.8.4	3.9.6 3.9.6.2.2 3.9.6.2.4 3.9.6.2.5 3.9.6.3 3.9.8.4	A
3.9-5	Surge Line Thermal Monitoring	3.9.8.5	3.9.3.1.2 3.9.8.5	A
3.11-1	Equipment Qualification File	3.11.5	3.11.5	H
4.4-2	Confirm Assumptions for Safety Analyses DNBR Limits	4.4.7	4.4.7	H
5.2-1	ASME Code and Addenda	5.2.6.1	5.2.1.1 5.2.6.1	A

VEGP SUP 1.8-2

Table 1.8-202 (Sheet 6 of 17)
COL Item Tabulation

COL ITEM	SUBJECT	DCD SUBSECTION	FSAR SECTION(S)	COL APPLICANT (A), HOLDER (H) OR BOTH (B)
5.2-2	Plant Specific Inspection Program	5.2.6.2	5.2.4 5.2.4.1 5.2.4.3.1 5.2.4.3.2 5.2.4.4 5.2.4.5 5.2.4.6 5.2.4.8 5.2.4.9 5.2.4.10 5.2.6.2	A
5.3-1	Reactor Vessel Pressure – Temperature Limit Curves	5.3.6.1	5.3.6.1	H
5.3-2	Reactor Vessel Materials Surveillance Program	5.3.6.2	5.3.2.6 5.3.2.6.3 5.3.6.2	A
5.3-4	Reactor Vessel Materials Properties Verification	5.3.6.4.1	5.3.6.4.1	H
5.4-1	Steam Generator Tube Integrity	5.4.15	5.4.2.5 5.4.15	A
6.1-1	Procedure Review for Austenitic Stainless Steels	6.1.3.1	6.1.1.2 6.1.3.1	A

VEGP SUP 1.8-2

Table 1.8-202 (Sheet 7 of 17)
COL Item Tabulation

COL ITEM	SUBJECT	DCD SUBSECTION	FSAR SECTION(S)	COL APPLICANT (A), HOLDER (H) OR BOTH (B)
6.1-2	Coating Program	6.1.3.2	6.1.2.1.6 6.1.3.2	A
6.2-1	Containment Leak Rate Testing	6.2.6	6.2.5.1 6.2.5.2.2 6.2.6	A
6.3-1	Containment Cleanliness Program	6.3.8.1	6.3.8.1	A
6.3-2	Verification of Water Sources for Long-Term Recirculation Cooling Following a LOCA	6.3.8.2	6.3.8.2	H
6.4-1	Local Hazardous Gas Services and Monitoring	6.4.7	2.2.3.2.3.1 2.2.3.2.3.2 2.2.3.3 6.4.4.2 6.4.7	A
6.4-2	Procedures for Training for Control Room Habitability	6.4.7	6.4.3 6.4.7	A

VEGP SUP 1.8-2

Table 1.8-202 (Sheet 8 of 17)
COL Item Tabulation

COL ITEM	SUBJECT	DCD SUBSECTION	FSAR SECTION(S)	COL APPLICANT (A), HOLDER (H) OR BOTH (B)
6.6-1	Inspection Programs	6.6.9.1	6.6 6.6.1 6.6.3.1 6.6.3.2 6.6.3.3 6.6.4 6.6.6 6.6.9.1	A
6.6-2	Construction Activities	6.6.9.2	6.6.2 6.6.9.2	A
8.2-1	Offsite Electrical Power	8.2.5	8.2.1 8.2.1.1 8.2.1.2 8.2.1.3 8.2.1.4 8.2.5	A
8.2-2	Technical Interfaces	8.2.5	8.2.1.2.1 8.2.2 8.2.5	A
8.3-1	Grounding and Lightning Protection	8.3.3	8.3.1.1.7 8.3.1.1.8 8.3.3	A

VEGP SUP 1.8-2

Table 1.8-202 (Sheet 9 of 17)
COL Item Tabulation

COL ITEM	SUBJECT	DCD SUBSECTION	FSAR SECTION(S)	COL APPLICANT (A), HOLDER (H) OR BOTH (B)
8.3-2	Onsite Electrical Power Plant Procedures	8.3.3	8.3.1.1.2.4 8.3.1.1.6 8.3.2.1.4 8.3.3	A
9.1-5	Inservice Inspection Program of Cranes	9.1.6.5	9.1.4.4 9.1.5.4 9.1.6	A
9.1-6	Radiation Monitor	9.1.6.6	9.1.4.3.8 9.1.5.3 9.1.6	A
9.2-1	Potable Water	9.2.11.1	9.2.5.2.1 9.2.5.2.2 9.2.5.3 9.2.5.6 9.2.12.1	A
9.2-2	Waste Water Retention Basins	9.2.11.2	9.2.9.2.1 9.2.9.2.2 9.2.9.5 9.2.12.2	A
9.3-1	Air Systems (NUREG-0933 Issue 43)	9.3.7	9.3.7	A

VEGP SUP 1.8-2

Table 1.8-202 (Sheet 10 of 17)
COL Item Tabulation

COL ITEM	SUBJECT	DCD SUBSECTION	FSAR SECTION(S)	COL APPLICANT (A), HOLDER (H) OR BOTH (B)
9.4-1	Ventilation Systems Operations	9.4.12	6.4.4.2 9.4.1.4 9.4.7.4 9.4.12	A
9.5-1	Qualification Requirements for Fire Protection Program	9.5.1.8.1	9.5.1.6 9.5.1.8 9.5.1.8.1.2 9.5.1.8.2 9.5.1.8.3 9.5.1.8.4 9.5.1.8.5 9.5.1.8.6 9.5.1.8.7 9.5.1.9.1 13.1.1.2.10	A
9.5-2	Fire Protection Analysis Information	9.5.1.8.2	9.5.1.9.2 9A.3.3	A
9.5-3	Regulatory Conformance	9.5.1.8.3	9.5.1.8.1.1 9.5.1.8.8 9.5.1.8.9 9.5.1.9.3 9A.3.3	A

VEGP SUP 1.8-2

Table 1.8-202 (Sheet 11 of 17)
COL Item Tabulation

COL ITEM	SUBJECT	DCD SUBSECTION	FSAR SECTION(S)	COL APPLICANT (A), HOLDER (H) OR BOTH (B)
9.5-4	NFPA Exceptions	9.5.1.8.4	9.5.1.8.1.1 9.5.1.9.4	A
9.5-6	Verification of Field Installed Fire Barriers	9.5.1.8.6	9.5.1.8.6 9.5.1.9.6	H
9.5-8	Establishment of Procedures to Minimize Risk for Fire Areas Breached During Maintenance	9.5.1.8.7	9.5.1.8.1.2 9.5.1.9.7	A
9.5-9	Offsite Interfaces	9.5.2.5.1	9.5.2.5.1	A
9.5-10	Emergency Offsite Communications	9.5.2.5.2	9.5.2.5.2	A
9.5-11	Security Communications	9.5.2.5.3	9.5.2.5.3	A
9.5-13	Fuel Degradation Protection	9.5.4.7.2	9.5.4.5.2 9.5.4.7.2	A
10.1-1	Erosion-Corrosion Monitoring	10.1.3	10.1.3.1 10.1.3.2 10.1.3.3	H
10.2-1	Turbine Maintenance and Inspection	10.2.6	10.2.6	H
10.4-1	Circulating Water Supply	10.4.12.1	10.4.5.2.1 10.4.5.2.2 10.4.5.5 10.4.12.1	A
10.4-2	Condensate, Feedwater and Auxiliary Steam System Chemistry Control	10.4.12.2	10.4.7.2.1 10.4.12.2	A

VEGP SUP 1.8-2

Table 1.8-202 (Sheet 12 of 17)
COL Item Tabulation

COL ITEM	SUBJECT	DCD SUBSECTION	FSAR SECTION(S)	COL APPLICANT (A), HOLDER (H) OR BOTH (B)
10.4-3	Potable Water	10.4.12.3	9.2.5.3 10.4.12.3	A
11.2-1	Liquid Radwaste Processing by Mobile Equipment	11.2.5.1	11.2.1.2.5.2 11.2.5.1	A
11.2-2	Cost Benefit Analysis of Population Doses	11.2.5.2	11.2.3.3 11.2.3.5 11.2.5.2	A
11.3-1	Cost Benefit Analysis of Population Doses	11.3.5.1	11.3.3.4 11.3.5.1	A
11.4-1	Solid Waste Management System Process Control Program	11.4.6	11.4.6	A
11.5-1	Plant Offsite Dose Calculation Manual (ODCM)	11.5.7	11.5.7	A
11.5-2	Effluent Monitoring and Sampling	11.5.7	11.5.1.2 11.5.2.4 11.5.3 11.5.4 11.5.4.1 11.5.4.2 11.5.6.5 11.5.7	A

VEGP SUP 1.8-2

Table 1.8-202 (Sheet 13 of 17)
COL Item Tabulation

COL ITEM	SUBJECT	DCD SUBSECTION	FSAR SECTION(S)	COL APPLICANT (A), HOLDER (H) OR BOTH (B)
11.5-3	10 CFR 50, Appendix I	11.5.7	11.2.3.5 11.3.3.4 11.5.7	A
12.1-1	ALARA and Operational Policies	12.1.3	12.1 12.1.3 Appendix 12AA	A
12.2-1	Additional Contained Radiation Sources	12.2.3	12.2.1.1.10 12.2.3	A
12.3-1	Administrative Controls for Radiological Protection	12.3.5.1	12.3.5.1 Appendix 12AA	A
12.3-2	Criteria and Methods for Radiological Protection	12.3.5.2	12.3.4 12.3.5.2	A
12.3-3	Groundwater Monitoring Program	12.3.5.3	12.3.5.3 Appendix 12AA	A
12.3-4	Record of Operational Events of Interest for Decommissioning	12.3.5.4	12.3.5.4 Appendix 12AA	A
12.5-1	Radiological Protection Organization and Procedures	12.5.5	12.5.5 Appendix 12AA	A

VEGP SUP 1.8-2

Table 1.8-202 (Sheet 14 of 17)
COL Item Tabulation

COL ITEM	SUBJECT	DCD SUBSECTION	FSAR SECTION(S)	COL APPLICANT (A), HOLDER (H) OR BOTH (B)
13.1-1	Organizational Structure of Combined License Applicant	13.1.1	13.1.1 13.1.2 13.1.3 13.1.4 Appendix 13AA	A
13.2-1	Training Program for Plant Personnel	13.2.1	13.2 13.2.1 Appendix 13BB	A
13.3-1	Emergency Planning and Communications	13.3.1	13.3 13.3.6 13.3.7	A
13.3-2	Activation of Emergency Operations Facility	13.3.1	13.3 13.3.1	A
13.4-1	Operational Review	13.4.1	13.4 13.4.1	A
13.5-1	Plant Procedures	13.5.1	13.5 13.5.3	A
13.6-1	Security	13.6	13.6 13.6.1	A
14.4-1	Organization and Staffing	14.4.1	14.2.2 14.4.1	A

VEGP SUP 1.8-2

Table 1.8-202 (Sheet 15 of 17)
COL Item Tabulation

COL ITEM	SUBJECT	DCD SUBSECTION	FSAR SECTION(S)	COL APPLICANT (A), HOLDER (H) OR BOTH (B)
14.4-2	Test Specifics and Procedures	14.4.2	14.4.2	H
14.4-4	Review and Evaluation of Test Results	14.4.4	14.2.3.2 14.4.4	H
14.4-5	Testing Interface Requirements	14.4.5	14.2.9.4.15 14.2.9.4.22 14.2.9.4.23 14.2.9.4.24 14.2.9.4.25 14.2.9.4.26 14.2.9.4.27 14.2.10.4.29 14.4.5	A
14.4-6	First-Plant-Only and Three-Plant-Only Tests	14.4.6	14.4.6	B
15.7-1	Consequences of Tank Failure	15.7.6	15.7.6	A
16.1-1	Technical Specification Preliminary Information	16.1	16.1.1	A
16.3-1	Procedure to Control Operability of Investment Protection Systems, Structures and Components	16.3.2	16.3.1 16.3.2	A
17.5-1	Quality Assurance Design Phase	17.5.1	17.1 17.5 17.7	A

VEGP SUP 1.8-2

Table 1.8-202 (Sheet 16 of 17)
COL Item Tabulation

COL ITEM	SUBJECT	DCD SUBSECTION	FSAR SECTION(S)	COL APPLICANT (A), HOLDER (H) OR BOTH (B)
17.5-2	Quality Assurance for Procurement, Fabrication, Installation, Construction and Testing	17.5.2	17.5 17.7	A
17.5-4	Quality Assurance Program for Operations	17.5.4	17.5 17.7	A
17.5-8	Operational Reliability Assurance Program Integration with Quality Assurance Program	17.5.8	17.5 17.7	A
18.2-2	Design of the Emergency Operations Facility	18.2.6.2	18.2.1.3 18.2.6.2	A
18.6-1	Plant Staffing	18.6.1	13.1.1.4 13.1.3.1 13.1.3.2 18.6 18.6.1	A
18.10-1	Training Program Development	18.10.1	13.1.1.3.1.3.2.2 13.2 18.10 18.10.1	A
18.14-1	Human Performance Monitoring	18.14	18.14	A
19.59.10-1	As-Built SSC HCLPF Comparison to Seismic Margin Evaluation	19.59.10.5	19.59.10.5	H

VEGP SUP 1.8-2

Table 1.8-202 (Sheet 17 of 17)
COL Item Tabulation

COL ITEM	SUBJECT	DCD SUBSECTION	FSAR SECTION(S)	COL APPLICANT (A), HOLDER (H) OR BOTH (B)
19.59.10-2	Evaluation of As-Built Plant Versus Design in AP1000 PRA and Site-Specific PRA External Events	19.59.10.5	19.59.10.5	B
19.59.10-3	Internal Fire and Internal Flood Analyses	19.59.10.5	19.59.10.5	H
19.59.10-4	Develop and Implement Severe Accident Management Guidance	19.59.10.5	19.59.10.5	A
19.59.10-5	Equipment Survivability	19.59.10.5	19.59.10.5	H

a) COL Items 1.9-2 and 1.9-3 are un-numbered in the DCD.

VEGP SUP 1.8-3

Table 1.8-203
ESP COL Action Item/FSAR Section Cross-References

ESP COL ITEM	SUBJECT	FSAR SECTION
2.2-1	Hydrazine Hazard from Onsite Storage Tanks	2.2.3.2.3.1
2.2-2	Other Chemical Hazards from Onsite Storage Tanks	2.2.3.2.3.2
13.3-1	Submit Revision to EALs Following NEI 07-01 Approval	13.3.8
13.3-2	Submit Developed EALs When Design Details Are Complete	13.3.8
13.3-3	Location of Technical Support Center	13.3.8
13.6-1	Access Control Measures to Address Existing Rail Spur	13.6.2

1.9 COMPLIANCE WITH REGULATORY CRITERIA

This section of the referenced DCD is incorporated by reference with the following departures and/or supplements.

1.9.1 REGULATORY GUIDES

Add the following paragraphs to the end of DCD Subsection 1.9.1:

STD COL 1.9-1 Divisions 2, 3, 6, 7, 9, and 10 of the regulatory guides do not apply to the construction or operational safety considerations and are not addressed in the FSAR.

VEGP COL 1.9-1 Division 4 of the regulatory guides applies to the Environmental Report and the topics are addressed in the Environmental Report. Three Division 4 Regulatory Guides are addressed in Appendix 1AA.

STD COL 1.9-1 Division 5 of the regulatory guides applies to the Physical Security Plan and the topics are addressed in the Physical Security Plan. Three Division 5 Regulatory Guides are addressed in Appendix 1AA.

Applicable Division 8 Regulatory Guides are addressed in Appendix 1AA.

Appendix 1AA provides a discussion of plant specific regulatory guide conformance, addressing new Regulatory Guides and new revisions not addressed by the referenced DCD. Regulatory Guides that are completely addressed by the DCD are not listed.

The following subsections provide a summary discussion of Divisions 1, 4, 5 and 8 of the regulatory guides as applicable to the content of this FSAR, or to the construction and/or operations phases.

1.9.1.1 Division 1 Regulatory Guides - Power Reactors

Add the following paragraphs to the end of DCD Subsection 1.9.1.1:

STD COL 1.9-1 Appendix 1AA provides an evaluation of the degree of compliance with Division 1 regulatory guides as applicable to the content of this FSAR, or to the site-specific

design, construction and/or operational aspects. The revisions of the regulatory guides against which the degree of compliance is evaluated are indicated. Any exceptions or alternatives to the provisions of the regulatory guides are identified and justification is provided. Table 1.9-201 identifies the appropriate regulatory guide to FSAR cross-references. The cross-referenced sections contain descriptive information applicable to the regulatory guide positions found in Appendix 1AA.

Superseded or canceled regulatory guides are not considered in Appendix 1AA or Table 1.9-201.

1.9.1.2 Division 4 Regulatory Guides - Environmental and Siting

---

Add the following as the first paragraph in DCD Subsection 1.9.1.2:

STD COL 1.9-1 Division 4 of the regulatory guides applies to the Environmental Report and the topics are addressed in the Environmental Report. Appendix 1AA provides an evaluation of the degree of compliance with Division 4 regulatory guides as applicable to the content of this FSAR, or to the site-specific design, construction and/or operational aspects. The revisions of the regulatory guides against which the plant is evaluated are indicated. Any exceptions or alternatives to the provisions of the regulatory guides are identified and justification is provided. For those regulatory guides applicable, Table 1.9-201 identifies the appropriate FSAR cross-references. The cross-referenced sections contain descriptive information applicable to the regulatory guide positions found in Appendix 1AA.

1.9.1.3 Division 5 Regulatory Guides - Materials and Plant Protection

---

Add the following as the first paragraph in DCD Subsection 1.9.1.3:

STD COL 1.9-1 Division 5 of the regulatory guides applies to the Physical Security Plan and the topics are addressed in the Physical Security Plan. Appendix 1AA provides an evaluation of the degree of compliance with Division 5 regulatory guides as applicable to the content of this FSAR, or to the site-specific design, construction and/or operational aspects. The revisions of the regulatory guides against which the plant is evaluated are indicated. Any exceptions or alternatives to the provisions of the regulatory guides are identified and justification is provided. The cross-referenced sections contain descriptive information applicable to the regulatory guide positions found in Appendix 1AA.

1.9.1.4 Division 8 Regulatory Guides - Occupational Health

Add the following paragraphs to the end of DCD Subsection 1.9.1.4:

STD COL 1.9-1 Appendix 1AA provides an evaluation of the degree of compliance with Division 8 regulatory guides as applicable to the content of this FSAR, or to the site-specific design, construction and/or operational aspects. The revisions of the regulatory guides against which the plant is evaluated are indicated. Any exceptions or alternatives to the provisions of the regulatory guides are identified and justification is provided. For those regulatory guides applicable, Table 1.9-201 identifies the appropriate FSAR cross-references. The cross-referenced sections contain descriptive information applicable to the regulatory guide positions found in Appendix 1AA.

Superseded or canceled regulatory guides are not considered in Appendix 1AA or Table 1.9-201.

1.9.1.5 Combined License Information

Add the following as the first paragraph in DCD Subsection 1.9.1.5:

STD COL 1.9-1 Division 1, 4, 5 and 8 Regulatory Guides applicable to the content of this FSAR, or to the site-specific design, construction and/or operational aspects are listed in Table 1.9-201 and Appendix 1AA.

1.9.2 COMPLIANCE WITH STANDARD REVIEW PLAN (NUREG-0800)

Add the following paragraph to the end of DCD Subsection 1.9.2:

STD SUP 1.9-1 Table 1.9-202 provides the required assessment of conformance with the applicable acceptance criteria and the associated FSAR cross-references.

The design related SRP acceptance criteria addressed by the certified design are identified as such in Table 1.9-202.

1.9.4.1 Review of NRC List of Unresolved Safety Issues and Generic Safety Issues

---

Add the following paragraphs to the end of DCD Subsection 1.9.4.1:

STD COL 1.9-3 Table 1.9-203 addresses the second un-numbered COL Information Item identified at the end of DCD Table 1.8-2 and listed in Table 1.8-202 as COL Information Item 1.9-3, "Unresolved Safety Issues and Generic Safety Issues." As such, Table 1.9-203 lists those issues on DCD Table 1.9-2 identified by Note "d," which apply to other than design issues, Note "f," which apply either to resolution of Combined License (COL) Information Items or to nuclear power plant operations issues, Note "h," which apply to issues unresolved pending generic resolution at the time of submittal of the AP1000 DCD, and any new Unresolved Safety Issues and Generic Safety Issues that have been included in NUREG-0933 (through supplement 30) since the DCD was developed. Many of these have since been resolved and incorporated into the applicable licensing regulations or guidance (e.g., the standard review plans). These resolved items (as indicated by NUREG-0933) are identified only as "Resolved per NUREG-0933." Many others are not in the list of items in NUREG-0933 Appendix B identified as applicable to new plants. These items are identified only as "Not applicable to new plants." For the remaining items, the table provides the FSAR sections that address the topic.

1.9.4.2.3 New Generic Issues

STD COL 1.9-3 Add the following text in DCD Subsection 1.9.4.2.3., following the AP1000 Position for Issue 185.

Issue 186 Potential Risk and Consequences of Heavy Load Drops in Nuclear Power Plants

Discussion:

This issue concerns licensees operating within the regulatory guidelines of Generic Letter 85-11 that may not have taken adequate measures to assess and mitigate the consequences of dropped heavy loads.

FSAR Position:

There are no planned heavy load lifts outside those already described in the DCD. However, over the plant life there may be occasions when heavy loads not presently addressed need to be

lifted (i.e. in support of special maintenance/ repairs). For these occasions, special procedures are generated that address the activity. Further discussion is provided in Subsection 9.1.5.3.

Issue 189 Susceptibility of Ice Condenser and Mark III Containments to Early Failure From Hydrogen Combustion During a Severe Accident Description

Discussion:

This issue concerns the early containment failure probability for ice condenser and BWR MARK III containments given the relatively low containment free volume and low containment strength in these designs.

FSAR Position:

The AP1000 design does not have an ice condenser containment or a Mark III containment. Therefore, this issue is not addressed in this FSAR.

Add the following text in DCD Subsection 1.9.4.2.3 following the AP1000 Position for Issue 191.

STD COL 1.9-3 Issue 191 Assessment of Debris Accumulation on PWR Sump Performance (REV. 1)

Discussion:

Results of research on BWR ECCS suction strainer blockage identified new phenomena and failure modes that were not considered in the resolution of Issue A-43. In addition, operating experience identified new contributors to debris and possible blockage of PWR sumps, such as degraded or failed containment paint coatings.

FSAR Position:

The design aspects of this issue are addressed by the DCD. The protective coatings program controls the procurement, application, inspection, and monitoring of Service Level I and Service Level III coatings with the quality assurance features discussed above. The protective coatings program complies with Regulatory Guide 1.54, and is controlled and implemented by administrative procedures. The program is discussed in Subsection 6.1.2.1.6.

Administrative procedures implement the containment cleanliness program. Implementation of the program minimizes the amount of debris that might be left in containment following refueling and maintenance outages. The program is consistent with the containment cleanliness program used in the evaluation discussed in DCD Subsection 6.3.8.2. The program is discussed in Subsection 6.3.8.1.

Issue 196 Boral Degradation

Discussion:

The issue specifically addresses the use of Boral in long-term dry storage casks for spent reactor fuel.

FSAR Position:

Long-term dry storage casks for spent reactor fuel are not used and therefore this issue is not addressed in this FSAR.

1.9.5.2.15 Severe Accident Mitigation Design Alternatives

Add the following text to the end of DCD Subsection 1.9.5.2.15.

FSAR Position:

VEGP SUP 1.9-2 The severe accident mitigation design alternatives (SAMDA) evaluation for AP1000 contained in DCD Appendix 1B is not incorporated into this FSAR, but is addressed in the ESPA Environmental Report.

1.9.5.5 Operational Experience

Add the following paragraph to the end of DCD Subsection 1.9.5.5.

STD COL 1.9-2 Table 1.9-204 lists the Bulletins and Generic Letters addressed by topical discussion in this FSAR. Table 1.9-204 also lists Bulletins and Generic Letters categorized as part of the first un-numbered COL Information Item identified at the end of DCD Table 1.8-2 and listed in Table 1.8-202 as COL Information Item 1.9-2. Table 1.9-204 provides the appropriate FSAR cross-references for the discussion of the topics addressed by those Bulletins and Generic Letters. Bulletins or

Generic Letters issued after those listed in the DCD are also included in Table 1.9-204. Issues identified as “procurement” or “maintenance” or “surveillance” in WCAP-15800 are addressed as part of the scope of the certified design and are not specifically identified in Table 1.9-204. Issues identified as “procedural” in WCAP-15800 are addressed by the procedures discussed in DCD Section 13.5 and are not specifically identified in Table 1.9-204. Other items in WCAP-15800, including the Circulars and Information Notices, are considered to have been adequately addressed based on the guidance identified in Regulatory Guide 1.206 and the NRC Standard Review Plans.

Table 1.9-201 (Sheet 1 of 8)
Regulatory Guide/FSAR Section Cross-References

	Regulatory Guides		FSAR Chapter, Section, or Subsection[a]
	Division 1 Regulatory Guides		
STD COL 1.9-1	1.8	Qualification and Training of Personnel for Nuclear Power Plants (Rev. 3, May 2000)	12.1 (NEI 07-08) Appendix 12AA Appendix 12AA (NEI 07-03) 13.1.1.4 13.1.3.1 13.2 (NEI 06-13A) Appendix 13BB
	1.12	Nuclear Power Plant Instrumentation for Earthquakes (Rev. 2, March 1997)	3.7.4.1
	1.16	Reporting of Operating Information — Appendix A Technical Specifications (Rev. 4, August 1975)	14.2.3.2
VEGP COL 1.9-1	1.21	Measuring, Evaluating, and Reporting Radioactivity in Solid Wastes and Releases of Radioactive Materials in Liquid and Gaseous Effluents From Light-Water-Cooled Nuclear Power Plants (Rev. 1, June 1974)	11.5.4.1 12.3.4
	1.23	Meteorological Monitoring Programs for Nuclear Power Plants (Pr-1, September 1980)	Note b 2.3.3.4
	1.26	Quality Group Classifications and Standards for Water-, Steam-, and Radioactive - Waste - Containing Components of Nuclear Power Plants (Rev. 4, March 2007)	Note b
	1.29	Seismic Design Classification (Rev. 3, September 1978, Rev. 4, March 2007)	Note b
STD COL 1.9-1	1.31	Control of Ferrite Content in Stainless Steel Weld Metal (Rev. 3, April 1978)	6.1.1.2

Table 1.9-201 (Sheet 2 of 8)
Regulatory Guide/FSAR Section Cross-References

	Regulatory Guides		FSAR Chapter, Section, or Subsection[a]
STD COL 1.9-1	1.44	Control of the Use of Sensitized Stainless Steel (Rev. 0, May 1973)	6.1.1.2
	1.54	Service Level I, II, and III Protective Coatings Applied to Nuclear Power Plants (Rev. 1, July 2000)	1.9.4.2.3 6.1.2.1.6
VEGP COL 1.9-1	1.59	Design Basis Floods for Nuclear Power Plants (Rev. 2, August 1977)	Note b
	1.60	Design Response Spectra for Seismic Design of Nuclear Power Plants (Rev. 1, December 1973)	Note b
STD COL 1.9-1	1.70	Standard Format and Content of Safety Analysis Reports for Nuclear Power Plants (LWR Edition) (Rev. 3, November 1978)	1.1.6.1
VEGP COL 1.9-1	1.70	Standard Format and Content of Safety Analysis Reports for Nuclear Power Plants (LWR Edition) (Rev. 3, November 1978)	Note b
	1.76	Design-Basis Tornado and Tornado Missiles for Nuclear Power Plants (PR-1, January 2006)	Note b
	1.78	Evaluating the Habitability of a Nuclear Power Plant Control Room During a Postulated Hazardous Chemical Release (Rev. 1, December 2001)	Note b 2.2.3.2.3
STD COL 1.9-1	1.91	Evaluations of Explosions Postulated To Occur on Transportation Routes Near Nuclear Power Plants (Rev. 1, February 1978)	3.5.1.5
VEGP COL 1.9-1	1.91	Evaluations of Explosions Postulated To Occur on Transportation Routes Near Nuclear Power Plants (Rev. 1, February 1978)	Note b 2.2.3.2.3

Table 1.9-201 (Sheet 3 of 8)
Regulatory Guide/FSAR Section Cross-References

	Regulatory Guides		FSAR Chapter, Section, or Subsection[a]
STD COL 1.9-1	1.97	Criteria For Accident Monitoring Instrumentation For Nuclear Power Plants (Rev. 4, June 2006)	Appendix 12AA (NEI 07-03)
	1.101	Emergency Response Planning and Preparedness for Nuclear Power Reactors (Rev. 5, June 2005)	9.5.1.8.2.2 Table 9.5-201
VEGP COL 1.9-1	1.101	Emergency Response Planning and Preparedness for Nuclear Power Reactors (Rev. 4, July 2003)	Note b
	1.102	Flood Protection for Nuclear Power Plants (Rev.1, September 1976)	Note b
	1.109	Calculation of Annual Doses to Man from Routine Releases of Reactor Effluents for the Purpose of Evaluating Compliance with 10 CFR Part 50, Appendix I (Rev. 1, October 1977)	Note b
	1.111	Methods for Estimating Atmospheric Transport and Dispersion of Gaseous Effluents in Routine Releases from Light-Water-Cooled Reactors (Rev. 1, July 1977)	Note b
	1.112	Calculation of Releases of Radioactive Materials in Gaseous and Liquid Effluents from Light-Water-Cooled Power Reactors (Rev. 0, April 1976)	Note b
	1.113	Estimating Aquatic Dispersion of Effluents from Accidental and Routine Reactor Releases for the Purpose of Implementing Appendix I (Rev. 1, April 1977)	Note b
STD COL 1.9-1	1.114	Guidance to Operators at the Controls and to Senior Operators in the Control Room of a Nuclear Power Unit (Rev. 2, May 1989)	13.1.2.1.3

Table 1.9-201 (Sheet 4 of 8)
Regulatory Guide/FSAR Section Cross-References

		Regulatory Guides	FSAR Chapter, Section, or Subsection[a]
STD COL 1.9-1	1.115	Protection Against Low-Trajectory Turbine Missiles (Rev. 1, July 1977)	3.5.1.3
VEGP COL 1.9-1	1.125	Physical Models for Design and Operation of Hydraulic Structures and Systems for Nuclear Power Plants (Rev. 1, October 1978)	Note b
STD COL 1.9-1	1.129	Maintenance, Testing, and Replacement of Vented Lead-Acid Storage Batteries for Nuclear Power Plants (Rev. 2, February 2007)	Table 8.1-201 8.3.2.1.4
VEGP COL 1.9-1	1.132	Site Investigations for Foundations of Nuclear Power Plants (Rev. 2, October 2003)	Note b
	1.138	Laboratory Investigations of Soils and Rocks for Engineering Analysis and Design of Nuclear Power Plants (Rev. 2, December 2003)	Note b
STD COL 1.9-1	1.140	Design, Inspection, and Testing Criteria for Air Filtration and Adsorption Units of Normal Atmosphere Cleanup Systems in Light-Water-Cooled Nuclear Power Plants (Rev. 2, June 2001)	9.4.1.4 9.4.7.4
	1.143	Design Guidance for Radioactive Waste Management Systems, Structures, and Components Installed in Light-Water-Cooled Nuclear Power Plants (Rev. 2, November 2001)	11.2.1.2.5.2 11.2.3.6 11.3.3.6 11.4.5 11.4.6.2
VEGP COL 1.9-1	1.145	Atmospheric Dispersion Models for Potential Accident Consequence Assessments at Nuclear Power Plants (Rev. 1, November 1982)	Note b
STD COL 1.9-1	1.147	Inservice Inspection Code Case Acceptability, ASME Section XI, Division 1 (Rev. 15, October 2007)	5.2.4 6.6

Table 1.9-201 (Sheet 5 of 8)
Regulatory Guide/FSAR Section Cross-References

		Regulatory Guides	FSAR Chapter, Section, or Subsection[a]
VEGP COL 1.9-1	1.149	Nuclear Power Plant Simulation Facilities for Use in Operator Training and License Examinations (Rev. 3, October 2001)	Appendix 13BB.2.1.3.4
STD COL 1.9-1	1.150	Ultrasonic Testing of Reactor Vessel Welds During Preservice and Inservice Examinations (Rev. 1, February 1983)	5.2.4.3
	1.155	Station Blackout (Rev. 0, August 1998)	Table 8.1-201
	1.160	Monitoring the Effectiveness of Maintenance at Nuclear Power Plants (Rev. 2, March 1997)	17.6 (NEI 07-02A)
	1.163	Performance-Based Containment Leak-Test Program (Rev. 0, September 1995)	6.2.5.1 6.2.5.2.2
VEGP COL 1.9-1	1.165	Identification and Characterization of Seismic Sources and Determination of Safe Shutdown Earthquake Ground Motion (Rev. 0, March 1997)	Note b
STD COL 1.9-1	1.166	Pre-Earthquake Planning and Immediate Nuclear Power Plant Operator Post Earthquake Actions (Rev. 0, March 1997)	3.7.4.4
	1.167	Restart of a Nuclear Power Plant Shut Down by a Seismic Event (Rev. 0, March 1997)	3.7.4.4
	1.182	Assessing and Managing Risk Before Maintenance Activities at Nuclear Power Plants (Rev. 0, May 2000)	17.6 (NEI 07-02A)
VEGP COL 1.9-1	1.183	Alternative Radiological Source Terms for Evaluating Design Basis Accidents at Nuclear Power Reactors (Rev. 0, July 2000)	Note b
STD COL 1.9-1	1.189	Fire Protection for Nuclear Power Plants (Rev. 1, March 2007)	9.5.1.8.1.1 9.5.1.8.2.2

Table 1.9-201 (Sheet 6 of 8)
Regulatory Guide/FSAR Section Cross-References

	Regulatory Guides		FSAR Chapter, Section, or Subsection[a]
STD COL 1.9-1	1.194	Atmospheric Relative Concentrations for Control Room Radiological Habitability Assessments at Nuclear Power Plants (Rev. 0, June 2003)	2.3.4.3
VEGP COL 1.9-1	1.198	Procedures and Criteria for Assessing Seismic Soil Liquefaction at Nuclear Power Plant Sites (Rev. 0, November 2003)	Note b
STD COL 1.9-1	1.200	An Approach for Determining the Technical Adequacy of Probabilistic Risk Assessment Results for Risk-Informed Activities (Rev. 1, January 2007)	19.59.10.6
	1.204	Guidelines for Lightning Protection of Nuclear Power Plants (Rev. 0, November 2005)	Table 8.1-201
VEGP COL 1.9-1	1.206	Combined License Applications for Nuclear Power Plants (LWR Edition) (Rev. 0, June 2007)	1.1.6.1 Table 1.8-201 1.9.5.5 Table 1.9-201 Table 1.9-202 See Appendix 1AA 2.1 2.2 2.4 Table 8.1-201 13BB.2.1.3.1 14.3.2.3.2
	Division 4 Regulatory Guides		
VEGP COL 1.9-1	4.2 and Supp. 1	Preparation of Environmental Reports for Nuclear Power Stations (Rev. 2, July 1976; Rev. 0, September 2000)	Note b
	4.7	General Site Suitability Criteria for Nuclear Power Stations (Rev. 2, April 1998)	Note b

Table 1.9-201 (Sheet 7 of 8)
Regulatory Guide/FSAR Section Cross-References

	Regulatory Guides		FSAR Chapter, Section, or Subsection[a]
STD COL 1.9-1	4.15	Quality Assurance for Radiological Monitoring Programs (Inception through Normal Operations to License Termination) — Effluent Streams and the Environment (Rev. 1, February 1979)	11.5.1.2 11.5.3 11.5.4 11.5.6.5
	Division 8 Regulatory Guides		
VEGP COL 1.9-1	8.2	Guide for Administrative Practices in Radiation Monitoring (Rev. 0, February 1973)	12.1 (NEI 07-08) 12.3.4 Appendix 12AA (NEI 07-03)
	8.4	Direct-Reading and Indirect-Reading Pocket Dosimeters (Rev. 0, February 1973)	Appendix 12AA (NEI 07-03)
	8.5	Criticality and Other Interior Evacuation Signals (Rev. 1, March 1981)	Appendix 12AA (NEI 07-03)
	8.6	Standard Test Procedure for Geiger-Muller Counters (Rev. 0, May 1973)	Appendix 12AA Appendix 12AA (NEI 07-03)
	8.7	Instructions for Recording and Reporting Occupational Radiation Dose Data (Rev. 2, November 2005)	12.1 (NEI 07-08) Appendix 12AA (NEI 07-03)
STD COL 1.9-1	8.8	Information Relevant to Ensuring That Occupational Radiation Exposures at Nuclear Power Stations Will Be as Low as Is Reasonably Achievable (Rev. 3, June 1978)	12.1 (NEI 07-08) 12.3.4 Appendix 12AA Appendix 12AA (NEI 07-03) 13.1.2.1.1
VEGP COL 1.9-1	8.9	Acceptable Concepts, Models, Equations, and Assumptions for a Bioassay Program (Rev. 1, July 1993)	12.1 (NEI 07-08) Appendix 12AA (NEI 07-03)
STD COL 1.9-1	8.10	Operating Philosophy for Maintaining Occupational Radiation Exposures as Low as Is Reasonably Achievable (Rev. 1-R, May 1977)	12.1 (NEI 07-08) 12.3.4 Appendix 12AA Appendix 12AA (NEI 07-03) 13.1.2.1.1
VEGP COL 1.9-1	8.13	Instruction Concerning Prenatal Radiation Exposure (Rev. 3, June 1999)	12.1 (NEI 07-08) Appendix 12AA (NEI 07-03)

Table 1.9-201 (Sheet 8 of 8)
Regulatory Guide/FSAR Section Cross-References

	Regulatory Guides		FSAR Chapter, Section, or Subsection[a]
VEGP COL 1.9-1	8.15	Acceptable Programs for Respiratory Protection (Rev. 1, October 1999)	12.1 (NEI 07-08) Appendix 12AA (NEI 07-03)
	8.27	Radiation Protection Training for Personnel at Light-Water-Cooled Nuclear Power Plants (Rev. 0, March 1981)	12.1 (NEI 07-08) Appendix 12AA (NEI 07-03)
	8.28	Audible-Alarm Dosimeters (Rev. 0, August 1981)	12.1 (NEI 07-08) Appendix 12AA (NEI 07-03)
	8.29	Instruction Concerning Risks from Occupational Radiation Exposure (Rev. 1, February 1996)	12.1 (NEI 07-08) Appendix 12AA (NEI 07-03)
	8.34	Monitoring Criteria and Methods To Calculate Occupational Radiation Doses (Rev. 0, July 1992)	12.1 (NEI 07-08) Appendix 12AA (NEI 07-03)
	8.35	Planned Special Exposures (Rev. 0, June 1992)	12.1 (NEI 07-08) Appendix 12AA (NEI 07-03)
	8.36	Radiation Dose to the Embryo/Fetus (Rev. 0, July 1992)	12.1 (NEI 07-08) Appendix 12AA (NEI 07-03)
	8.38	Control of Access to High and Very High Radiation Areas of Nuclear Plants (Rev. 1, May 2006)	12.1 (NEI 07-08) Appendix 12AA (NEI 07-03)

STD COL 1.9-1 a. NEI templates are incorporated by reference. See Table 1.6-201.

VEGP COL 1.9-1 b. This Regulatory Guide is referenced in the ESPA SSAR.

Table 1.9-202 (Sheet 1 of 27)[a]
Conformance with SRP Acceptance Criteria

	Criteria Section[b]		Reference Criteria	FSAR Position[c]	Comments/Summary of Exceptions
STD SUP 1.9-1	1	Introduction and Interfaces, Initial Issuance, 03/2007		N/A	No specific acceptance criteria associated with these general requirements.
VEGP SUP 1.9-2	2.0	Site Characteristics and Site Parameters, Initial Issuance, 03/2007			See Note h.
	2.1.1	Site Location and Description			See Note h.
	2.1.2	Exclusion Area Authority and Control			See Note h.
	2.1.3	Population Distribution			See Note h.
	2.2.1 – 2.2.2	Identification of Potential Hazards in Site Vicinity			See Note h.
	2.2.3	Evaluation of Potential Accidents			See Note h.
	2.3.1	Regional Climatology			See Note h.
	2.3.2	Local Meteorology			See Note h.
	2.3.3	Onsite Meteorological Measurements Programs			See Note h.
	2.3.4	Short-Term Atmospheric Dispersion Estimates for Accident Releases			See Note h.
	2.3.5	Long-Term Atmospheric Dispersion Estimates for Routine Releases			See Note h.
	2.4.1	Hydrologic Description			See Note h.
	2.4.2	Floods, Rev. 4, 03/2007			See Note h.

Table 1.9-202 (Sheet 2 of 27)[a]
Conformance with SRP Acceptance Criteria

	Criteria Section[b]		Reference Criteria	FSAR Position[c]	Comments/Summary of Exceptions
VEGP SUP 1.9-2	2.4.3	Probable Maximum Flood (PMF) on Streams and Rivers, Rev. 4, 03/2007			See Note h.
	2.4.4	Potential Dam Failures			See Note h.
	2.4.5	Probable Maximum Surge and Seiche Flooding			See Note h.
	2.4.6	Probable Maximum Tsunami Hazards			See Note h.
	2.4.7	Ice Effects			See Note h.
	2.4.8	Cooling Water Canals and Reservoirs			See Note h.
	2.4.9	Channel Diversions			See Note h.
	2.4.10	Flooding Protection Requirements			See Note h.
	2.4.11	Low Water Considerations			See Note h.
	2.4.12	Groundwater			See Note h.
	2.4.13	Accidental Releases of Radioactive Liquid Effluents in Ground and Surface Waters			See Note h.
STD SUP 1.9-1	2.4.14	Technical Specifications and Emergency Operation Requirements		Acceptable.	
VEGP SUP 1.9-2	2.5.1	Basic Geologic and Seismic Information, Rev.4, 03/2007			See Note h.
	2.5.2	Vibratory Ground Motion, Rev. 4, 03/2007			See Note h.
	2.5.3	Surface Faulting, Rev. 4, 03/2007			See Note h.
	2.5.4	Stability of Subsurface Materials and Foundations			See Note h.

Table 1.9-202 (Sheet 3 of 27)[a]
Conformance with SRP Acceptance Criteria

	Criteria Section[b]		Reference Criteria	FSAR Position[c]	Comments/Summary of Exceptions
VEGP SUP 1.9-2	2.5.5	Stability of Slopes			See Note h.
STD SUP 1.9-1	3.2.1	Seismic Classification, Rev. 2, 03/2007			See Notes d and e.
	3.2.2	System Quality Group Classification, Rev. 2, 03/2007			See Notes d and e.
	3.3.1	Wind Loadings		Acceptable	See Notes d, e, and f.
	3.3.2	Tornado Loadings		Acceptable	See Notes d, e, and f.
	3.4.1	Internal Flood Protection for Onsite Equipment Failures		Acceptable	See Notes d, e, and f.
	3.4.2	Analysis Procedures			See Notes d and e.
	3.5.1.1	Internally Generated Missiles (Outside Containment)			See Notes d and e.
	3.5.1.2	Internally Generated Missiles (Inside Containment)			See Notes d and e.
	3.5.1.3	Turbine Missiles		Acceptable	See Notes d, e, and f.
	3.5.1.4	Missiles Generated by Tornadoes and Extreme Winds			See Notes d and e.
	3.5.1.5	Site Proximity Missiles (Except Aircraft), Rev.4, 03/2007		Acceptable	See Notes d, e, and f.
VEGP SUP 1.9-2	3.5.1.6	Aircraft Hazards			See Note h
STD SUP 1.9-1	3.5.2	Structures, Systems, and Components to be Protected from Externally-Generated Missiles			See Notes d and e.

Table 1.9-202 (Sheet 4 of 27)[a]
Conformance with SRP Acceptance Criteria

	Criteria Section[b]		Reference Criteria	FSAR Position[c]	Comments/Summary of Exceptions
STD SUP 1.9-1	3.5.3	Barrier Design Procedures			See Notes d and e.
	3.6.1	Plant Design for Protection Against Postulated Piping Failures in Fluid Systems Outside Containment			See Notes d and e.
	3.6.2	Determination of Rupture Locations and Dynamic Effects Associated with the Postulated Rupture of Piping, Rev. 2, 03/2007		Acceptable	See Notes d, e, and f.
	3.6.3	Leak-Before-Break Evaluation Procedures, Rev. 1, 03/2007		Acceptable	See Notes d, e, and f.
	3.7.1	Seismic Design Parameters			See Notes d and e.
	3.7.2	Seismic System Analysis		Acceptable	See Notes d, e, and f.
	3.7.3	Seismic Subsystem Analysis			See Notes d and e.
	3.7.4	Seismic Instrumentation, Rev. 2, 03/2007		Acceptable	See Notes d, e, and f.
	3.8.1	Concrete Containment, Rev. 2, 03/2007			See Notes d and e.
	3.8.2	Steel Containment, Rev. 2, 03/2007			See Notes d and e.
	3.8.3	Concrete and Steel Internal Structures of Steel or Concrete Containments, Rev. 2, 03/2007			See Notes d and e.
	3.8.4	Other Seismic Category I Structures, Rev. 2, 03/2007			See Notes d and e.
	3.8.5	Foundations, Rev. 2, 03/2007		Acceptable	See Notes d, e, and f.
	3.9.1	Special Topics for Mechanical Components			See Notes d and e.

Table 1.9-202 (Sheet 5 of 27)[a]
Conformance with SRP Acceptance Criteria

	Criteria Section[b]		Reference Criteria	FSAR Position[c]	Comments/Summary of Exceptions
STD SUP 1.9-1	3.9.2	Dynamic Testing and Analysis of Systems, Structures, and Components			See Notes d and e.
	3.9.3	ASME Code Class 1, 2, and 3 Components, Component Supports, and Core Support Structures, Rev. 2, 03/2007		Acceptable	See Notes d, e, and f.
	3.9.4	Control Rod Drive Systems			See Notes d and e.
	3.9.5	Reactor Pressure Vessel Internals			See Notes d and e.
	3.9.6	Functional Design, Qualification, and Inservice Testing Programs for Pumps, Valves, and Dynamic Restraints		Acceptable	See Notes d, e, and f.
	3.9.7	Risk-Informed Inservice Testing, Rev. 0, 08/1998		N/A	
	3.9.8	Risk-Informed Inservice Inspection of Piping, Rev. 0, 09/2003		N/A	
	3.10	Seismic and Dynamic Qualification of Mechanical and Electrical Equipment			See Notes d and e.
	3.11	Environmental Qualification of Mechanical and Electrical Equipment		Acceptable	See Notes d, e, and f.
	3.12	ASME Code Class 1, 2, and 3 Piping Systems, Piping Components and their Associated Supports, Initial Issuance, 03/2007			See Note g.
	3.13	Threaded Fasteners - ASME Code Class 1, 2, and 3, Initial Issuance, 03/2007			See Note g.

Table 1.9-202 (Sheet 6 of 27)[a]
Conformance with SRP Acceptance Criteria

	Criteria Section[b]		Reference Criteria	FSAR Position[c]	Comments/Summary of Exceptions
STD SUP 1.9-1	4.2	Fuel System Design			See Notes d and e.
	4.3	Nuclear Design			See Notes d and e.
	4.4	Thermal and Hydraulic Design, Rev. 2, 03/2007		Acceptable	See Notes d, e, and f.
	4.5.1	Control Rod Drive Structural Materials			See Notes d and e.
	4.5.2	Reactor Internal and Core Support Structure Materials			See Notes d and e.
	4.6	Functional Design of Control Rod Drive System, Rev. 2, 03/2007			See Notes d and e.
	5.2.1.1	Compliance with the Codes and Standards Rule, 10 CFR 50.55a		Acceptable	See Notes d, e, and f.
	5.2.1.2	Applicable Code Cases			See Notes d and e.
	5.2.2	Overpressure Protection			See Notes d and e.
	5.2.3	Reactor Coolant Pressure Boundary Materials		Acceptable	See Notes d, e, and f.
	5.2.4	Reactor Coolant Pressure Boundary Inservice Inspection and Testing, Rev. 2, 03/2007		Acceptable	See Notes d, e, and f.
	5.2.5	Reactor Coolant Pressure Boundary Leakage Detection, Rev. 2, 03/2007			See Notes d and e.
	5.3.1	Reactor Vessel Materials, Rev. 2, 03/2007			See Notes d and e.
	5.3.2	Pressure-Temperature Limits Upper-Shelf Energy and Pressurized Thermal Shock, Rev. 2, 03/2007		Acceptable	See Notes d, e, and f.

Table 1.9-202 (Sheet 7 of 27)[a]
Conformance with SRP Acceptance Criteria

	Criteria Section[b]		Reference Criteria	FSAR Position[c]	Comments/Summary of Exceptions
STD SUP 1.9-1	5.3.3	Reactor Vessel Integrity, Rev. 2, 03/2007		Acceptable	See Notes d, e, and f.
	5.4	Reactor Coolant System Component and Subsystem Design, Rev. 2, 03/2007		N/A	No specific acceptance criteria associated with these general requirements.
	5.4.1.1	Pump Flywheel Integrity (PWR), Rev. 2, 03/2007			See Notes d and e.
	5.4.2.1	Steam Generator Materials			See Notes d and e.
	5.4.2.2	Steam Generator Program, Rev. 2, 03/2007		Acceptable	See Notes d, e, and f.
	5.4.6	Reactor Core Isolation Cooling System (BWR), Rev. 4, 03/2007		N/A	
	5.4.7	Residual Heat Removal (RHR) System, Rev. 4, 03/2007			See Notes d and e.
	5.4.8	Reactor Water Cleanup System (BWR)		N/A	
	5.4.11	Pressurizer Relief Tank			See Notes d and e.
	5.4.12	Reactor Coolant System High Point Vents, Rev. 1, 03/2007			See Notes d and e.
	5.4.13	Isolation Condenser System (BWR), Initial Issuance, 03/2007		N/A	
	6.1.1	Engineered Safety Features Materials, Rev. 2, 03/2007		Acceptable	See Notes d, e, and f.
	6.1.2	Protective Coating Systems (Paints) – Organic Materials		Acceptable	See Notes d, e, and f.

Table 1.9-202 (Sheet 8 of 27)[a]
Conformance with SRP Acceptance Criteria

	Criteria Section[b]		Reference Criteria	FSAR Position[c]	Comments/Summary of Exceptions
STD SUP 1.9-1	6.2.1	Containment Functional Design			See Notes d and e.
	6.2.1.1.A	PWR Dry Containments, Including Subatmospheric Containments			See Notes d and e.
	6.2.1.1.B	Ice Condenser Containments, Draft Rev. 3, 06/1996		N/A	
	6.2.1.1.C	Pressure-Suppression Type BWR Containments, Rev. 7, 03/2007		N/A	
	6.2.1.2	Subcompartment Analysis			See Notes d and e.
	6.2.1.3	Mass and Energy Release Analysis for Postulated Loss-of-Coolant Accidents (LOCAs)			See Notes d and e.
	6.2.1.4	Mass and Energy Release Analysis for Postulated Secondary System Pipe Ruptures, Rev. 2, 03/2007			See Notes d and e.
	6.2.1.5	Minimum Containment Pressure Analysis for Emergency Core Cooling System Performance Capability Studies			See Notes d and e.
	6.2.2	Containment Heat Removal Systems, Rev. 5, 03/2007			See Notes d and e.
	6.2.3	Secondary Containment Functional Design			See Notes d and e.
	6.2.4	Containment Isolation System			See Notes d and e.
	6.2.5	Combustible Gas Control in Containment		Acceptable	See Notes d, e, and f.
	6.2.6	Containment Leakage Testing		Acceptable	See Notes d, e, and f.

Table 1.9-202 (Sheet 9 of 27)[a]
Conformance with SRP Acceptance Criteria

	Criteria Section[b]		Reference Criteria	FSAR Position[c]	Comments/Summary of Exceptions
STD SUP 1.9-1	6.2.7	Fracture Prevention of Containment Pressure Boundary, Rev. 1, 03/2007			See Notes d and e.
	6.3	Emergency Core Cooling System		Acceptable	See Notes d, e, and f.
	6.4	Control Room Habitability System		Acceptable	See Notes d, e, and f.
	6.5.1	ESF Atmosphere Cleanup Systems			See Notes d and e.
	6.5.2	Containment Spray as a Fission Product Cleanup System, Rev. 4, 03/2007			See Notes d and e.
	6.5.3	Fission Product Control Systems and Structures			See Notes d and e.
	6.5.4	Ice Condenser as a Fission Product Cleanup System, Draft Rev. 4, 06/1996		N/A	
	6.5.5	Pressure Suppression Pool as a Fission Product Cleanup System, Rev. 1, 03/2007		N/A	
	6.6	Inservice Inspection and Testing of Class 2 and 3 Components, Rev. 2, 03/2007		Acceptable	See Notes d, e, and f.
	6.7	Main Steam Isolation Valve Leakage Control System (BWR), Draft Rev. 3, 06/1996		N/A	
	7	Instrumentation and Controls –Overview of Review Process, Rev. 5, 03/2007			See Notes d and e.
	Appendix 7.0-A	Review Process for Digital Instrumentation and Control Systems, Rev. 5, 03/2007			See Notes d and e.

Table 1.9-202 (Sheet 10 of 27)[a]
Conformance with SRP Acceptance Criteria

	Criteria Section[b]		Reference Criteria	FSAR Position[c]	Comments/Summary of Exceptions
STD SUP 1.9-1	7.1	Instrumentation and Controls –Introduction, Rev. 5, 03/2007			See Notes d and e.
	7.1-T Table 7-1	Regulatory Requirements, Acceptance Criteria, and Guidelines for Instrumentation and Control Systems Important to Safety, Rev. 5, 03/2007			See Notes d and e.
	Appendix 7.1-A	Acceptance Criteria and Guidelines for Instrumentation and Controls Systems Important to Safety, Rev. 5, 03/2007			See Notes d and e.
	Appendix 7.1-B	Guidance for Evaluation of Conformance to IEEE Std 279, Rev. 5, 03/2007			See Notes d and e.
	Appendix 7.1-C	Guidance for Evaluation of Conformance to IEEE Std 603, Rev. 5, 03/2007			See Notes d and e.
	Appendix 7.1-D	Guidance for Evaluation of the Application of IEEE Std 7-4.3.2 Initial Issuance 03/2007			See Notes d and e.
	7.2	Reactor Trip System, Rev. 5, 03/2007			See Notes d and e.
	7.3	Engineered Safety Features Systems, Rev. 5, 03/2007			See Notes d and e.
	7.4	Safe Shutdown Systems, Rev. 5, 03/2007			See Notes d and e.
	7.5	Information Systems Important to Safety, Rev. 5, 03/2007			See Notes d and e.
	7.6	Interlock Systems Important to Safety, Rev. 5, 03/2007			See Notes d and e.

Table 1.9-202 (Sheet 11 of 27)[a]
Conformance with SRP Acceptance Criteria

	Criteria Section[b]		Reference Criteria	FSAR Position[c]	Comments/Summary of Exceptions
STD SUP 1.9-1	7.7	Control Systems, Rev. 5, 03/2007			See Notes d and e.
	7.8	Diverse Instrumentation and Control Systems, Rev. 5, 03/2007			See Notes d and e.
	7.9	Data Communication Systems, Rev. 5, 03/2007			See Notes d and e.
	8.1	Electric Power – Introduction		N/A	No specific acceptance criteria associated with these general requirements.
	8.2	Offsite Power System, Rev. 4, 03/2007		Acceptable	See Notes d, e, and f
	8.3.1	A-C Power Systems (Onsite)		Acceptable	See Notes d, e, and f.
	8.3.2	D-C Power Systems (Onsite)		Acceptable	See Notes d, e, and f.
	8.4	Station Blackout, Initial Issuance, 03/2007			See Note g.
	9.1.1	Criticality Safety of Fresh and Spent Fuel Storage and Handling			See Notes d and e.
	9.1.2	New and Spent Fuel Storage, Rev. 4, 03/2007			See Notes d and e.
	9.1.3	Spent Fuel Pool Cooling and Cleanup System, Rev. 2, 03/2007			See Notes d and e.
	9.1.4	Light Load Handling System (Related to Refueling)		Acceptable	See Notes d, e, and f.
	9.1.5	Overhead Heavy Load Handling Systems, Rev. 1, 03/2007		Acceptable	See Notes d, e, and f.
	9.2.1	Station Service Water System, Rev. 5, 03/2007		Acceptable	See Notes d, e, and f.

Table 1.9-202 (Sheet 12 of 27)[a]
Conformance with SRP Acceptance Criteria

	Criteria Section[b]		Reference Criteria	FSAR Position[c]	Comments/Summary of Exceptions
STD SUP 1.9-1	9.2.2	Reactor Auxiliary Cooling Water Systems, Rev. 4, 03/2007			See Notes d and e.
	9.2.4	Potable and Sanitary Water Systems			See Notes d and e.
	9.2.5	Ultimate Heat Sink		Acceptable	See Notes d, e, and f.
	9.2.6	Condensate Storage Facilities		Acceptable	See Notes d, e, and f.
	9.3.1	Compressed Air System, Rev. 2, 03/2007		Acceptable	See Notes d, e, and f.
	9.3.2	Process and Post-accident Sampling Systems			See Notes d and e.
	9.3.3	Equipment and Floor Drainage System			See Notes d and e.
	9.3.4	Chemical and Volume Control System (PWR) (Including Boron Recovery System)			See Notes d and e.
	9.3.5	Standby Liquid Control System (BWR)		N/A	
	9.4.1	Control Room Area Ventilation System		Acceptable	See Notes d, e, and f.
	9.4.2	Spent Fuel Pool Area Ventilation System			See Notes d and e.
	9.4.3	Auxiliary and Radwaste Area Ventilation System			See Notes d and e.
	9.4.4	Turbine Area Ventilation System			See Notes d and e.
	9.4.5	Engineered Safety Feature Ventilation System			See Notes d and e.
	9.5.1	Fire Protection Program, Rev. 5, 03/2007		Acceptable	See Notes d, e, and f.
	9.5.2	Communications Systems		Acceptable	See Notes d, e, and f.
	9.5.3	Lighting Systems			See Notes d and e.

Table 1.9-202 (Sheet 13 of 27)[a]
Conformance with SRP Acceptance Criteria

	Criteria Section[b]		Reference Criteria	FSAR Position[c]	Comments/Summary of Exceptions
STD SUP 1.9-1	9.5.4	Emergency Diesel Engine Fuel Oil Storage and Transfer System		Acceptable	See Notes d, e, and f.
	9.5.5	Emergency Diesel Engine Cooling Water System			See Notes d and e.
	9.5.6	Emergency Diesel Engine Starting System			See Notes d and e.
	9.5.7	Emergency Diesel Engine Lubrication System			See Notes d and e.
	9.5.8	Emergency Diesel Engine Combustion Air Intake and Exhaust System			See Notes d and e.
	10.2	Turbine Generator		Acceptable	See Notes d, e, and f.
	10.2.3	Turbine Rotor Integrity, Rev. 2, 03/2007		Acceptable	See Notes d, e, and f.
	10.3	Main Steam Supply System, Rev. 4, 03/2007		Acceptable	See Notes d, e, and f.
	10.3.6	Steam and Feedwater System Materials		Acceptable	See Notes d, e, and f.
	10.4.1	Main Condensers			See Notes d and e.
	10.4.2	Main Condenser Evacuation System		Acceptable	See Notes d, e, and f.
	10.4.3	Turbine Gland Sealing System			See Notes d and e.
	10.4.4	Turbine Bypass System			See Notes d and e.
	10.4.5	Circulating Water System		Acceptable	See Notes d, e, and f.
	10.4.6	Condensate Cleanup System			See Notes d and e.
	10.4.7	Condensate and Feedwater System, Rev. 4, 03/2007		Acceptable	See Notes d, e, and f.
	10.4.8	Steam Generator Blowdown System (PWR)			See Notes d and e.

Table 1.9-202 (Sheet 14 of 27)[a]
Conformance with SRP Acceptance Criteria

	Criteria Section[b]		Reference Criteria	FSAR Position[c]	Comments/Summary of Exceptions
STD SUP 1.9-1	10.4.9	Auxiliary Feedwater System (PWR)			See Notes d and e.
	11.1	Source Terms			See Notes d and e.
VEGP SUP 1.9-2	11.2	Liquid Waste Management System		Acceptable	See Notes d, e, f, and h.
	11.3	Gaseous Waste Management System			See Notes d, e, f, and h.
STD SUP 1.9-1	11.4	Solid Waste Management System		Acceptable	See Notes d, e, and f.
	11.5	Process and Effluent Radiological Monitoring Instrumentation and Sampling Systems, Rev. 4, 03/2007		Acceptable	See Notes d, e, and f.

Table 1.9-202 (Sheet 15 of 27)[a]
Conformance with SRP Acceptance Criteria

	Criteria Section[b]		Reference Criteria	FSAR Position[c]	Comments/Summary of Exceptions
STD SUP 1.9-1	12.1	Assuring that Occupational Radiation Exposures Are As Low As Is Reasonably Achievable		Exception	See Notes d, e, and f. An exception is taken to following the guidance of RG 1.206 to address RG 8.20, 8.25, and RG 8.26. NUREG-1736, Final Report (published 2001) lists RG 8.20 and RG 8.26 as “outdated” and recommends the methods of RG 8.9 R1. RG 8.25 states it is not applicable to nuclear facilities licensed under 10 CFR Part 50, and, by extension, to 10 CFR Part 52. An exception is taken to RG 8.8 C.3.b. RG 1.16 C.1.b (3) data is no longer reported. Reporting per C.1.b (2) is also no longer required.

Table 1.9-202 (Sheet 16 of 27)[a]
Conformance with SRP Acceptance Criteria

	Criteria Section[b]		Reference Criteria	FSAR Position[c]	Comments/Summary of Exceptions
STD SUP 1.9-1	12.2	Radiation Sources		Exception	See Notes d, e, and f. A general description of miscellaneous sealed sources related to radiography is provided in FSAR text. Other requested details are maintained on-site for NRC review and audit upon their procurement.
	12.3 – 12.4	Radiation Protection Design Features		Acceptable	See Notes d, e, and f.
	12.5	Operational Radiation Protection Program		Acceptable	See Notes d, e, and f.

Table 1.9-202 (Sheet 17 of 27)[a]
Conformance with SRP Acceptance Criteria

	Criteria Section[b]		Reference Criteria	FSAR Position[c]	Comments/Summary of Exceptions
STD SUP 1.9-1	13.1.1	Management and Technical Support Organization, Rev. 5, 03/2007		Exception	See Notes d, e, and f. Design and construction responsibilities are not defined in numbers. The experience requirements of corporate staff are set by corporate policy and not provided here in detail, however the experience level of the corporate staff, as discussed Subsections 13.1.1, 13.1.1.1, and Appendix 13AA, in the area of nuclear plant development, construction, and management establishes that the applicant has the necessary capability and staff to ensure that design and construction of the facility will be performed in an acceptable manner.

Table 1.9-202 (Sheet 18 of 27)[a]
Conformance with SRP Acceptance Criteria

	Criteria Section[b]		Reference Criteria	FSAR Position[c]	Comments/Summary of Exceptions
STD SUP 1.9-1					Resumes and/or other documentation of qualification and experience of initial appointees to appropriate management and supervisory positions are available for NRC after position vacancies are filled.
	13.1.2 –13.1.3	Operating Organization, Rev. 6, 03/2007		Exception	See Notes d, e, and f. The SRP requires resumes of personnel holding plant managerial and supervisory positions to be included in the FSAR. Current industry practice is to have the resumes available for review by the regulator when requested but not be kept in the FSAR. Additionally, at time of COLA, most positions are unfilled.

Table 1.9-202 (Sheet 19 of 27)[a]
Conformance with SRP Acceptance Criteria

	Criteria Section[b]		Reference Criteria	FSAR Position[c]	Comments/Summary of Exceptions
STD SUP 1.9-1	13.2.1	Reactor Operator Requalification Program; Reactor Operator Training		Exception	See Notes d, e, and f. SRP requires meeting the guidance of NUREG-0711. NEI 06-13A, Technical Report on a Template for an Industry Training Program Description, which is incorporated by reference in FSAR 13.2, does not address meeting the guidance of NUREG-0711. NEI 06-13A, is approved by NRC to meet the regulatory requirements for the FSAR description of the Training Program. SRP requires meeting the guidance of Regulatory Guide 1.149, “Nuclear Power Plant Simulation Facilities for Use in Operator Training and License Examinations” RG 1.149 is not addressed in NEI 06-13A. Level of detail is consistent with NEI 06-13A.

Table 1.9-202 (Sheet 20 of 27)[a]
Conformance with SRP Acceptance Criteria

	Criteria Section[b]		Reference Criteria	FSAR Position[c]	Comments/Summary of Exceptions
STD SUP 1.9-1	13.2.2	Non-Licensed Plant Staff Training		Exception	See Notes d, e, and f. Level of detail is consistent with NEI 06-13A.
VEGP SUP 1.9-2	13.3	Emergency Planning			See Notes d, e, f, and h.
STD SUP 1.9-1	13.4	Operational Programs		Acceptable	See Notes d, e, and f.
	13.5.1.1	Administrative Procedures – General, Initial Issuance, 03/2007		Exception	The procedure development schedule is addressed in the COL application (not in the SAR as requested by this SRP).
	13.5.2.1	Operating and Emergency Operating Procedures, Rev. 2, 03/2007		Exception	See Notes d, e, and f. Procedures are generally identified in this section by topic, type, or classification in lieu of the specific title and represent general areas of procedural coverage.
	13.6	Physical Security		Acceptable	See Security Plan developed in accordance with NEI 03-12.
	13.6.1	Physical Security - Combined License Review Responsibilities, Initial Issuance, 03/2007		Acceptable	See Security Plan developed in accordance with NEI 03-12
	13.6.2	Physical Security - Design Certification, Initial Issuance, 03/2007			See notes d and e.

Table 1.9-202 (Sheet 21 of 27)[a]
Conformance with SRP Acceptance Criteria

	Criteria Section[b]		Reference Criteria	FSAR Position[c]	Comments/Summary of Exceptions
VEGP SUP 1.9-2	13.6.3	Physical Security - Early Site Permit, Initial Issuance, 03/2007			See Note h.
STD SUP 1.9-1	14.2	Initial Plant Test Program - Design Certification and New License Applicants		Exception	See Notes d, e, and f. The level of detail is consistent with DCD section content addressing nonsafety-related systems.
	14.2.1	Generic Guidelines for Extended Power Uprate Testing Programs, Initial Issuance, 08/2006		N/A	No power uprate is sought.
	14.3	Inspections, Tests, Analyses, and Acceptance Criteria, Initial Issuance, 03/2007)		Acceptable	
	14.3.1	[Reserved]			
	14.3.2	Structural and Systems Engineering - Inspections, Tests, Analyses, and Acceptance Criteria, Initial Issuance, 03/2007			See Notes d and e.
	14.3.3	Piping Systems and Components - Inspections, Tests, Analyses, and Acceptance Criteria, Initial Issuance, 03/2007			See Notes d and e.
	14.3.4	Reactor Systems - Inspections, Tests, Analyses, and Acceptance Criteria, Initial Issuance, 03/2007			See Notes d and e.

Table 1.9-202 (Sheet 22 of 27)[a]
Conformance with SRP Acceptance Criteria

	Criteria Section[b]		Reference Criteria	FSAR Position[c]	Comments/Summary of Exceptions
STD SUP 1.9-1	14.3.5	Instrumentation and Controls - Inspections, Tests, Analyses, and Acceptance Criteria, Initial Issuance, 03/07			See Notes d and e.
	14.3.6	Electrical Systems - Inspections, Tests, Analyses, and Acceptance Criteria, Initial Issuance, 03/07			See Notes d and e.
	14.3.7	Plant Systems - Inspections, Tests, Analyses, and Acceptance Criteria, Initial Issuance, 03/07		Acceptable	See Notes d, e, and f.
	14.3.8	Radiation Protection - Inspections, Tests, Analyses, and Acceptance Criteria, Initial Issuance, 03/07			See Notes d and e.
	14.3.9	Human Factors Engineering - Inspections, Tests, Analyses, and Acceptance Criteria, Initial Issuance, 03/2007			See Notes d and e.
VEGP SUP 1.9-2	14.3.10	Emergency Planning - Inspections, Tests, Analyses, and Acceptance Criteria, Initial Issuance, 03/2007		Exception	See Subsection 14.3.2.3.3.
STD SUP 1.9-1	14.3.11	Containment Systems - Inspections, Tests, Analyses, and Acceptance Criteria, Initial Issuance, 03/2007			See Notes d and e.
	14.3.12	Physical Security Hardware - Inspections, Tests, Analyses, and Acceptance Criteria, Initial Issuance, 03/2007		Acceptable	See Notes d, e, and f.

Table 1.9-202 (Sheet 23 of 27)[a]
Conformance with SRP Acceptance Criteria

	Criteria Section[b]		Reference Criteria	FSAR Position[c]	Comments/Summary of Exceptions
STD SUP 1.9-1	15	Introduction —Transient and Accident Analysis			See Notes d and e.
	15.0.1	Radiological Consequence Analyses Using Alternative Source Terms, Rev. 0, 07/2000			See Notes d and e.
	15.0.2	Review of Transient and Accident Analysis Method, Rev. 0, 12/2005			See Notes d and e.
	15.0.3	Design Basis Accident Radiological Consequences of Analyses for Advanced Light Water Reactors, Initial Issuance, 03/2007			See Notes d and e.
	15.1.1 – 15.1.4	Decrease in Feedwater Temperature, Increase in Feedwater Flow, Increase in Steam Flow, and Inadvertent Opening of a Steam Generator Relief or Safety Valve, Rev. 2, 03/2007			See Notes d and e.
	15.1.5	Steam System Piping Failures Inside and Outside of Containment (PWR)			See Notes d and e.
	15.2.1 – 15.2.5	Loss of External Load; Turbine Trip; Loss of Condenser Vacuum; Closure of Main Steam Isolation Valve (BWR); and Steam Pressure Regulator Failure (Closed), Rev. 2, 03/2007			See Notes d and e.
	15.2.6	Loss of Nonemergency AC Power to the Station Auxiliaries, Rev. 2, 03/2007			See Notes d and e.
	15.2.7	Loss of Normal Feedwater Flow, Rev. 2, 03/2007			See Notes d and e.

Table 1.9-202 (Sheet 24 of 27)[a]
Conformance with SRP Acceptance Criteria

	Criteria Section[b]		Reference Criteria	FSAR Position[c]	Comments/Summary of Exceptions
STD SUP 1.9-1	15.2.8	Feedwater System Pipe Breaks Inside and Outside Containment (PWR), Rev. 2, 03/2007			See Notes d and e.
	15.3.1 – 15.3.2	Loss of Forced Reactor Coolant Flow Including Trip of Pump Motor and Flow Controller Malfunctions, Rev. 2, 03/2007			See Notes d and e.
	15.3.3 – 15.3.4	Reactor Coolant Pump Rotor Seizure and Reactor Coolant Pump Shaft Break			See Notes d and e.
	15.4.1	Uncontrolled Control Rod Assembly Withdrawal from a Subcritical or Low Power Startup Condition			See Notes d and e.
	15.4.2	Uncontrolled Control Rod Assembly Withdrawal at Power			See Notes d and e.
	15.4.3	Control Rod Misoperation (System Malfunction or Operator Error)			See Notes d and e.
	15.4.4 –15.4.5	Startup of an Inactive Loop or Recirculation Loop at an Incorrect Temperature, and Flow Controller Malfunction Causing an Increase in BWR Core Flow Rate, Rev. 2, 03/2007			See Notes d and e.
	15.4.6	Inadvertent Decrease in Boron Concentration in the Reactor Coolant System (PWR), Rev. 2, 03/2007			See Notes d and e.

Table 1.9-202 (Sheet 25 of 27)[a]
Conformance with SRP Acceptance Criteria

	Criteria Section[b]		Reference Criteria	FSAR Position[c]	Comments/Summary of Exceptions
STD SUP 1.9-1	15.4.7	Inadvertent Loading and Operation of a Fuel Assembly in an Improper Position, Rev. 2, 03/2007			See Notes d and e.
	15.4.8	Spectrum of Rod Ejection Accidents (PWR)			See Notes d and e.
	15.4.8.A	Radiological Consequences of a Control Rod Ejection Accident (PWR) , Rev. 1, 07/1981			See Notes d and e.
	15.4.9	Spectrum of Rod Drop Accidents (BWR)		N/A	
	15.5.1 – 15.5.2	Inadvertent Operation of ECCS and Chemical and Volume Control System Malfunction that Increases Reactor Coolant Inventory, Rev. 2, 03/2007			See Notes d and e.
	15.6.1	Inadvertent Opening of a PWR Pressurizer Pressure Relief Valve or a BWR Pressure Relief Valve, Rev. 2, 03/2007			See Notes d and e.
	15.6.5	Loss-of-Coolant Accidents Resulting From Spectrum of Postulated Piping Breaks Within the Reactor Coolant Pressure Boundary			See Notes d and e.
	15.8	Anticipated Transients Without Scram, Rev. 2, 03/2007			See Notes d and e.
	15.9	Boiling Water Reactor Stability, Initial Issuance, 03/2007		N/A	
	16	Technical Specifications, Rev. 2, 03/2007		Acceptable	See Notes d, e, and f.

Table 1.9-202 (Sheet 26 of 27)[a]
Conformance with SRP Acceptance Criteria

	Criteria Section[b]		Reference Criteria	FSAR Position[c]	Comments/Summary of Exceptions
STD SUP 1.9-1	16.1	Risk-informed Decision Making: Technical Specifications, Rev. 1, 03/2007		N/A	This SRP applies to the Technical Specifications change process.
	17.1	Quality Assurance During the Design and Construction Phases, Rev. 2, 07/1981		Acceptable	See Notes d, e, and f.
	17.2	Quality Assurance During the Operations Phase, Rev. 2, 07/1981			See Notes d and e.
	17.3	Quality Assurance Program Description, Rev. 0, 08/1990			See Notes d and e.
	17.4	Reliability Assurance Program (RAP), Initial Issuance, 03/2007			See Notes d and e.
	17.5	Quality Assurance Program Description - Design Certification, Early Site Permit and New License Applicants, Initial Issuance, 03/2007		Acceptable	See Notes d, e, and f. This section covers the requirements of SRP Section 17.5 through reference to Quality Assurance Program Description which is maintained separately and developed in accordance with NEI 06-14A.
VEGP SUP 1.9-2	17.6	Maintenance Rule, Rev 1, 08/2007		Acceptable	Content developed in accordance with NEI 07-02A
STD SUP 1.9-1	18.0	Human Factors Engineering, Rev. 2, 03/2007		Acceptable	See Notes d, e, and f.

Table 1.9-202 (Sheet 27 of 27)[a]
Conformance with SRP Acceptance Criteria

	Criteria Section[b]		Reference Criteria	FSAR Position[c]	Comments/Summary of Exceptions
STD SUP 1.9-1	19.0	Probabilistic Risk Assessment and Severe Accident Evaluation for New Reactors, Rev. 2, 06/2007		Acceptable	See Notes d, e, and f.
	19.1	Determining the Technical Adequacy of Probabilistic Risk Assessment Results for Risk-Informed Activities, Rev. 2, 06/2007		Acceptable	See Notes d, e, and f.
	19.2	Review of Risk Information Used to Support Permanent Plant-Specific Changes to the Licensing Basis: General Guidance, Initial Issuance, 06/2007			See Note g.

a) This table is provided as a one-time aid to facilitate NRC review. This table becomes historical information and need not be updated

b) If no revision or date is specified, it is Rev. 3, 03/2007.

c) Consult the AP1000 Design Control Document (DCD) Appendix 1A and Appendix 1AA to determine extent of conformance with Regulatory Guides (except Regulatory Guide 1.206).

d) Conformance with a previous revision of this SRP is documented in AP1000 Design Control Document (Section 1.9.2 and WCAP-15799)

e) Conformance with the design aspects of this SRP is as stated in the AP1000 DCD.

f) Conformance with the plant or site-specific aspects of this SRP is as stated under “FSAR Position.”

g) This SRP is not applicable to the AP1000 certified design.

VEGP SUP 1.9-2 h) Conformance with RS-002 and NUREG-0800 criteria contained in referenced ESPA. Refer to ESPA SSAR Table 1-2.

STD COL 1.9-3

Table 1.9-203 (Sheet 1 of 15)
Listing Of Unresolved Safety Issues And Generic Safety Issues

Action Plan Item/Issue No.	Title	Applicable Screening Criteria	Notes
TMI Action Plan Items			
I.A.1.1	Shift Technical Advisor	f	Resolved per NUREG-0933
I.A.1.2	Shift Supervisor Administrative Duties	f	Resolved per NUREG-0933
I.A.1.3	Shift Manning	f	Resolved per NUREG-0933
I.A.1.4	Long-Term Upgrading	f	Resolved per NUREG-0933
I.A.2.1(1)	Qualifications - Experience	f	Resolved per NUREG-0933
I.A.2.1(2)	Immediate Upgrading of RO & SRO Training and Qualifications, Training	f	Resolved per NUREG-0933
I.A.2.1(3)	Facility Certification of Competence and Fitness of Applicants for Operator and Senior Operator Licenses	f	Resolved per NUREG-0933
I.A.2.3	Administration of Training Programs	f	Resolved per NUREG-0933
I.A.2.4	NRR Participation in Inspector Training	d	Not applicable to new plants
I.A.2.6(1)	Revise Regulatory Guide 1.8	f	Resolved per NUREG-0933
I.A.3.1	Revise Scope of Criteria for Licensing Examinations	f	Resolved per NUREG-0933
I.A.3.5	Establish Statement of Understanding with INPO and DOE	d	Not applicable to new plants
I.A.4.1(2)	Interim Changes in Training Simulators	f	Resolved per NUREG-0933
I.A.4.2(1)	Research on Training Simulators	f	Resolved per NUREG-0933
I.A.4.2(2)	Upgrade Training Simulator Standards	f	Resolved per NUREG-0933
I.A.4.2(3)	Regulatory Guide on Training Simulators	f	Resolved per NUREG-0933
I.A.4.2(4)	Review Simulators for Conformance to Criteria	f	Resolved per NUREG-0933
I.A.4.3	Feasibility Study of Procurement of NRC Training Simulator	d	Not applicable to new plants

STD COL 1.9-3

Table 1.9-203 (Sheet 2 of 15)
Listing Of Unresolved Safety Issues And Generic Safety Issues

Action Plan Item/Issue No.	Title	Applicable Screening Criteria	Notes
I.A.4.4	Feasibility Study of NRC Engineering Computer	d	Not applicable to new plants
I.B.1.3(1)	Require Licensees to Place Plant in Safest Shutdown Cooling Following a Loss of Safety Function Due to Personnel Error	d	Not applicable to new plants
I.B.1.3(2)	Use Existing Enforcement Options to Accomplish Safest Shutdown Cooling	d	Not applicable to new plants
I.B.1.3(3)	Use Non-Fiscal Approaches to Accomplish Safest Shutdown Cooling	d	Not applicable to new plants
I.B.2.1(1)	Verify the Adequacy of Management and Procedural Controls and Staff Discipline	d	Not applicable to new plants
I.B.2.1(2)	Verify that Systems Required to Be Operable Are Properly Aligned	d	Not applicable to new plants
I.B.2.1(3)	Follow-up on Completed Maintenance Work Orders to Ensure Proper Testing and Return to Service	d	Not applicable to new plants
I.B.2.1(4)	Observe Surveillance Tests to Determine Whether Test Instruments Are Properly Calibrated	d	Not applicable to new plants
I.B.2.1(5)	Verify that Licensees Are Complying with Technical Specifications	d	Not applicable to new plants
I.B.2.1(6)	Observe Routine Maintenance	d	Not applicable to new plants
I.B.2.1(7)	Inspect Terminal Boards, Panels, and Instrument Racks for Unauthorized Jumpers and Bypasses	d	Not applicable to new plants
I.B.2.2	Resident Inspector at Operating Reactors	d	Not applicable to new plants
I.B.2.3	Regional Evaluations	d	Not applicable to new plants
I.B.2.4	Overview of Licensee Performance	d	Not applicable to new plants
I.C.1(1)	Small Break LOCAs	f	Resolved per NUREG-0933
I.C.1(2)	Inadequate Core Cooling	f	Resolved per NUREG-0933
I.C.1(3)	Transients and Accidents	f	Resolved per NUREG-0933
I.C.2	Shift and Relief Turnover Procedures	f	Resolved per NUREG-0933

STD COL 1.9-3

Table 1.9-203 (Sheet 3 of 15)
Listing Of Unresolved Safety Issues And Generic Safety Issues

Action Plan Item/Issue No.	Title	Applicable Screening Criteria	Notes
I.C.3	Shift Supervisor Responsibilities	f	Resolved per NUREG-0933
I.C.4	Control Room Access	f	Resolved per NUREG-0933
I.C.6	Procedures for Verification of Correct Performance of Operating Activities	f	Resolved per NUREG-0933
I.C.7	NSSS Vendor Review of Procedures	f	Resolved per NUREG-0933
I.C.8	Pilot Monitoring of Selected Emergency Procedures for Near-Term Operating License Applicants	f	Resolved per NUREG-0933
I.D.5(5)	Disturbance Analysis Systems	d	Not applicable to new plants
I.D.6	Technology Transfer Conference	d	Not applicable to new plants
I.E.1	Office for Analysis and Evaluation of Operational Data	d	Not applicable to new plants
I.E.2	Program Office Operational Data Evaluation	d	Not applicable to new plants
I.E.3	Operational Safety Data Analysis	d	Not applicable to new plants
I.E.4	Coordination of Licensee, Industry, and Regulatory Programs	d	Not applicable to new plants
I.E.5	Nuclear Plant Reliability Data Systems	d	Not applicable to new plants
I.E.6	Reporting Requirements	d	Not applicable to new plants
I.E.7	Foreign Sources	d	Not applicable to new plants
I.E.8	Human Error Rate Analysis	d	Not applicable to new plants
I.F.2(6)	Increase the Size of Licensees' QA Staff	f	Resolved per NUREG-0933
I.F.2(9)	Clarify Organizational Reporting Levels for the QA Organization	f	Resolved per NUREG-0933
I.G.1	Training Requirements	f	Resolved per NUREG-0933

STD COL 1.9-3

Table 1.9-203 (Sheet 4 of 15)
Listing Of Unresolved Safety Issues And Generic Safety Issues

Action Plan Item/Issue No.	Title	Applicable Screening Criteria	Notes
I.G.2	Scope of Test Program	f	Resolved per NUREG-0933
II.B.4	Training for Mitigating Core Damage	f	Resolved per NUREG-0933
II.B.5(1)	Behavior of Severely Damages Fuel	d	Not applicable to new plants
II.B.5(2)	Behavior of Core Melt	d	Not applicable to new plants
II.B.5(3)	Effect of Hydrogen Burning and Explosions on Containment Structures	d	Not applicable to new plants
II.B.6	Risk Reduction for Operating Reactors at Sites with High Population Densities	f	Resolved per NUREG-0933
II.E.1.3	Update Standard Review Plan and Develop Regulatory Guide	d	Resolved per NUREG-0933
II.E.6.1	Test Adequacy Study	d	Resolved per NUREG-0933
II.F.5	Classification of Instrumentation, Control, and Electrical Equipment	d	Not applicable to new plants
II.H.4	Determine Impact of TMI on Socioeconomic and Real Property Values	d	Not applicable to new plants
II.J.1.1	Establish a Priority System for Conducting Vendor Inspections	d	Not applicable to new plants
II.J.1.2	Modify Existing Vendor Inspection Program	d	Not applicable to new plants
II.J.1.3	Increase Regulatory Control Over Present Non-Licensees	d	Not applicable to new plants
II.J.1.4	Assign Resident Inspectors to Reactor Vendors and Architect-Engineers	d	Not applicable to new plants
II.J.2.1	Reorient Construction Inspection Program	d	Not applicable to new plants
II.J.2.2	Increase Emphasis on Independent Measurement in Construction Inspection Program	d	Not applicable to new plants
II.J.2.3	Assign Resident Inspectors to All Construction Sites	d	Not applicable to new plants

STD COL 1.9-3

Table 1.9-203 (Sheet 5 of 15)
Listing Of Unresolved Safety Issues And Generic Safety Issues

Action Plan Item/Issue No.	Title	Applicable Screening Criteria	Notes
II.J.3.1	Organization and Staffing to Oversee Design and Construction	f	Not applicable to new plants
II.J.4.1	Revise Deficiency Reporting Requirements	f	Resolved per NUREG-0933
II.K.1(1)	Review TMI-2 PNs and Detailed Chronology of the TMI-2 Accident	f	Resolved per NUREG-0933
II.K.1(3)	Review Operating Procedures for Recognizing, Preventing, and Mitigating Void Formation in Transients and Accidents	f	Resolved per NUREG-0933
II.K.1(4)	Review Operating Procedures and Training Instructions	f	Resolved per NUREG-0933
II.K.1(5)	Safety-Related Valve Position Description	f	Resolved per NUREG-0933
II.K.1(6)	Review Containment Isolation Initiation Design and Procedures	f	Resolved per NUREG-0933
II.K.1(9)	Review Procedures to Assure That Radioactive Liquids and Gases Are Not Transferred out of Containment Inadvertently	f	Resolved per NUREG-0933
II.K.1(10)	Review and Modify Procedures for Removing Safety-Related Systems from Service	f	Resolved per NUREG-0933
II.K.1(11)	Make All Operating and Maintenance Personnel Aware of the Seriousness and Consequences of the Erroneous Actions Leading up to, and in Early Phases of, the TMI-2 Accident	f	Resolved per NUREG-0933
II.K.1(12)	One Hour Notification Requirement and Continuous Communications Channels	f	Resolved per NUREG-0933
II.K.1(13)	Propose Technical Specification Changes Reflecting Implementation of All Bulletin Items	f	Resolved per NUREG-0933
II.K.1(14)	Review Operating Modes and Procedures to Deal with Significant Amounts of Hydrogen	f	Resolved per NUREG-0933
II.K.1(15)	For Facilities with Non-Automatic AFW Initiation, Provide Dedicated Operator in Continuous Communication with CR to Operate AFW	f	Resolved per NUREG-0933
II.K.1(16)	Implement Procedures That Identify PZR PORV "Open" Indications and That Direct Operator to Close Manually at "Reset" Setpoint	f	Resolved per NUREG-0933

STD COL 1.9-3

Table 1.9-203 (Sheet 6 of 15)
Listing Of Unresolved Safety Issues And Generic Safety Issues

Action Plan Item/Issue No.	Title	Applicable Screening Criteria	Notes
II.K.1(17)	Trip PZR Level Bistable so That PZR Low Pressure Will Initiate Safety Injection	f	Resolved per NUREG-0933
II.K.1(26)	Revise Emergency Procedures and Train ROs and SROs	f	Resolved per NUREG-0933
II.K.3(3)	Report Safety and Relief Valve Failures Promptly and Challenges Annually	f	Resolved per NUREG-0933
II.K.3(5)	Automatic Trip of Reactor Coolant Pumps	f	Resolved per NUREG-0933
II.K.3(10)	Anticipatory Trip Modification Proposed by Some Licensees to Confine Range of Use to High Power Levels	f	Resolved per NUREG-0933
II.K.3(11)	Control Use of PORV Supplied by Control Components, Inc. Until Further Review Complete	f	Resolved per NUREG-0933
II.K.3(12)	Confirm Existence of Anticipatory Trip Upon Turbine Trip	f	Resolved per NUREG-0933
II.K.3(30)	Revised Small-Break LOCA Methods to Show Compliance with 10 CFR 50, Appendix K	f	Resolved per NUREG-0933
II.K.3(31)	Plant-Specific Calculations to Show Compliance with 10 CFR 50.46	f	Resolved per NUREG-0933
III.A.1.1(1)	Implement Action Plan Requirements for Promptly Improving Licensee Emergency Preparedness	f	Resolved per NUREG-0933
III.A.1.1(2)	Perform an Integrated Assessment of the Implementation	f	Not applicable to new plants
III.A.2.1(1)	Publish Proposed Amendments to the Rules	d	Resolved per NUREG-0933
III.A.2.1(2)	Conduct Public Regional Meetings	d	Not applicable to new plants
III.A.2.1(3)	Prepare Final Commission Paper Recommending Adoption of Rules	d	Not applicable to new plants
III.A.2.1(4)	Revise Inspection Program to Cover Upgraded Requirements	d	Resolved per NUREG-0933
III.A.2.2	Development of Guidance and Criteria	d	Resolved per NUREG-0933

STD COL 1.9-3

Table 1.9-203 (Sheet 7 of 15)
Listing Of Unresolved Safety Issues And Generic Safety Issues

Action Plan Item/Issue No.	Title	Applicable Screening Criteria	Notes
III.A.3.3	Communications	d	Resolved per NUREG-0933
III.C.1(1)	Review Publicly Available Documents	d	Not applicable to new plants
III.C.1(2)	Recommend Publication of Additional Information	d	Not applicable to new plants
III.C.1(3)	Program of Seminars for News Media Personnel	d	Not applicable to new plants
III.C.2(1)	Develop Policy and Procedures for Dealing With Briefing Requests	d	Not applicable to new plants
III.C.2(2)	Provide Training for Member of the Technical Staff	d	Not applicable to new plants
III.D.2.4(2)	Place 50 TLDs Around Each Site	d	Not applicable to new plants
III.D.2.6	Independent Radiological Measurements	d	Not applicable to new plants
III.D.3.2(1)	Amend 10 CFR 20	d	Not applicable to new plants
III.D.3.2(2)	Issue a Regulatory Guide	d	Not applicable to new plants
III.D.3.2(3)	Develop Standard Performance Criteria	d	Not applicable to new plants
III.D.3.2(4)	Develop Method for Testing and Certifying Air-Purifying Respirators	d	Not applicable to new plants
III.D.3.3	In-Plant Radiation Monitoring	COL Item 12.3-2	12.3.4, Appendix 12AA
III.D.3.5(1)	Develop Format for Data To Be Collected by Utilities Regarding Total Radiation Exposure to Workers	d	Not applicable to new plants
III.D.3.5(2)	Investigate Methods of Obtaining Employee Health Data by Nonlegislative Means	d	Not applicable to new plants
III.D.3.5(3)	Revise 10 CFR 20	d	Not applicable to new plants
IV.A.1	Seek Legislative Authority	d	Not applicable to new plants
IV.A.2	Revise Enforcement Policy	d	Not applicable to new plants

STD COL 1.9-3

Table 1.9-203 (Sheet 8 of 15)
Listing Of Unresolved Safety Issues And Generic Safety Issues

Action Plan Item/Issue No.	Title	Applicable Screening Criteria	Notes
IV.B.1	Revise Practices for Issuance of Instructions and Information to Licensees	d	Not applicable to new plants
IV.D.1	NRC Staff Training	d	Not applicable to new plants
IV.E.1	Expand Research on Quantification of Safety Decision-Making	d	Not applicable to new plants
IV.E.2	Plan for Early Resolution of Safety Issues	d	Not applicable to new plants
IV.E.3	Plan for Resolving Issues at the CP Stage	d	Not applicable to new plants
IV. E.4	Resolve Generic Issues by Rulemaking	d	Not applicable to new plants
IV.G.1	Develop a Public Agenda for Rulemaking	d	Not applicable to new plants
IV.G.2	Periodic and Systematic Reevaluation of Existing Rules	d	Not applicable to new plants
IV.G.3	Improve Rulemaking Procedures	d	Not applicable to new plants
IV.G.4	Study Alternatives for Improved Rulemaking Process	d	Not applicable to new plants
IV.H.1	NRC Participation in the Radiation Policy Council	d	Not applicable to new plants
V.A.1	Develop NRC Policy Statement on Safety	d	Not applicable to new plants
V.B.1	Study and Recommend, as Appropriate, Elimination of Nonsafety Responsibilities	d	Not applicable to new plants
V.C.1	Strengthen the Role of Advisory Committee on Reactor Safeguards	d	Not applicable to new plants
V.C.2	Study Need for Additional Advisory Committees	d	Not applicable to new plants
V.C.3	Study the Need to Establish an Independent Nuclear Safety Board	d	Not applicable to new plants
V.D.1	Improve Public and Intervenor Participation in the Hearing Process	d	Not applicable to new plants
V.D.2	Study Construction-During-Adjudication Rules	d	Not applicable to new plants

STD COL 1.9-3

Table 1.9-203 (Sheet 9 of 15)
Listing Of Unresolved Safety Issues And Generic Safety Issues

Action Plan Item/Issue No.	Title	Applicable Screening Criteria	Notes
V.D.3	Reexamine Commission Role in Adjudication	d	Not applicable to new plants
V.D.4	Study the Reform of the Licensing Process	d	Not applicable to new plants
V.E.1	Study the Need for TMI-Related Legislation	d	Not applicable to new plants
V.F.1	Study NRC Top Management Structure and Process	d	Not applicable to new plants
V.F.2	Reexamine Organization and Functions of the NRC Offices	d	Not applicable to new plants
V.F.3	Revise Delegations of Authority to Staff	d	Not applicable to new plants
V.F.4	Clarify and Strengthen the Respective Roles of Chairman, Commission, and Executive Director for Operations	d	Not applicable to new plants
V.F.5	Authority to Delegate Emergency Response Functions to a Single Commissioner	d	Not applicable to new plants
V.G.1	Achieve Single Location, Long-Term	d	Not applicable to new plants
V.G.2	Achieve Single Location, Interim	d	Not applicable to new plants
Task Action Plan Items			
A-3	Westinghouse Steam Generator Tube Integrity (former USI)	COL Item 5.4-1	5.4.2.5
A-19	Digital Computer Protection System	d	Not applicable to new plants
A-20	Impacts of the Coal Fuel Cycle	d	Not applicable to new plants
A-23	Containment Leak Testing	COL Item 6.2-1	6.2.5.1
A-27	Reload Applications	d	Not applicable to new plants
B-1	Environmental Technical Specifications	d	Not applicable to new plants
B-2	Forecasting Electricity Demand	d	Not applicable to new plants
B-11	Subcompartment Standard Problems	d	Not applicable to new plants

STD COL 1.9-3

Table 1.9-203 (Sheet 10 of 15)
Listing Of Unresolved Safety Issues And Generic Safety Issues

Action Plan Item/Issue No.	Title	Applicable Screening Criteria	Notes
B-13	Marviken Test Data Evaluation	d	Not applicable to new plants
B-20	Standard Problem Analysis	d	Not applicable to new plants
B-25	Piping Benchmark Problems	d	Not applicable to new plants
B-27	Implementation and Use of Subsection NF	d	Not applicable to new plants
B-28	Radionuclide/Sediment Transport Program	d	Not applicable to new plants
B-29	Effectiveness of Ultimate Heat Sinks	d	Not applicable to new plants
B-30	Design Basis Floods and Probability	d	Not applicable to new plants
B-33	Dose Assessment Methodology	d	Not applicable to new plants
B-35	Confirmation of Appendix I Models for Calculations of Releases of Radioactive Materials in Gaseous and Liquid Effluents from Light Water Cooled Power Reactors	d	Not applicable to new plants
B-37	Chemical Discharges to Receiving Waters	d	Not applicable to new plants
B-42	Socioeconomic Environmental Impacts	d	Not applicable to new plants
B-43	Value of Aerial Photographs for Site Evaluation	d	Not applicable to new plants
B-44	Forecasts of Generating Costs of Coal and Nuclear Plants	d	Not applicable to new plants
B-49	Inservice Inspection Criteria and Corrosion Prevention Criteria for Containments	d	Not applicable to new plants
B-59	(N-1) Loop Operation in BWRs and PWRs	d	Not applicable to new plants
B-64	Decommissioning of Reactors	f	Resolved per NUREG-0933.
B-72	Health Effects and Life Shortening from Uranium and Coal Fuel Cycles	d	Not applicable to new plants

Table 1.9-203 (Sheet 11 of 15)
STD COL 1.9-3 Listing Of Unresolved Safety Issues And Generic Safety Issues

Action Plan Item/Issue No.	Title	Applicable Screening Criteria	Notes
C-4	Statistical Methods for ECCS Analysis	d	Not applicable to new plants
C-5	Decay Heat Update	d	Not applicable to new plants
C-6	LOCA Heat Sources	d	Not applicable to new plants
New Generic Issues			
43.	Reliability of Air Systems	f, j	Resolved per NUREG-0933.
59.	Technical Specification Requirements for Plant Shutdown when Equipment for Safe Shutdown is Degraded or Inoperable	d	Not applicable to new plants
67.2.1	Integrity of Steam Generator Tube Sleeves	d	Not applicable to new plants
67.5.1	Reassessment of Radiological Consequences	d	Not applicable to new plants
67.5.2	Reevaluation of SGTR Design Basis	d	Not applicable to new plants
67.10.0	Supplement Tube Inspections	d	Not applicable to new plants
99.	RCS/RHR Suction Line Valve Interlock on PWRs	f	Resolved per NUREG-0933.
111.	Stress Corrosion Cracking of Pressure Boundary Ferritic Steels in Selected Environments	d	Not applicable to new plants
112.	Westinghouse RPS Surveillance Frequencies and Out-of-Service Times	d	Not applicable to new plants
118.	Tendon Anchorage Failure	f	Resolved per NUREG-0933.
119.1	Piping Rupture Requirements and Decoupling of Seismic and LOCA Loads	d	Not applicable to new plants
119.3	Decoupling the OBE from the SSE	d	Not applicable to new plants
119.4	BWR Piping Materials	d	Not applicable to new plants
119.5	Leak Detection Requirements	d	Not applicable to new plants

STD COL 1.9-3

Table 1.9-203 (Sheet 12 of 15)
Listing Of Unresolved Safety Issues And Generic Safety Issues

Action Plan Item/Issue No.	Title	Applicable Screening Criteria	Notes
128.	Electrical Power Reliability	h (High)	Resolved per NUREG-0933.
130.	Essential Service Water Pump Failures at Multiplant Sites	f	See DCD Subsection 1.9.4, item 130
133.	Update Policy Statement on Nuclear Plant Staff Working Hours	d	Not applicable to new plants
136.	Storage and Use of Large Quantities of Cryogenic Combustibles On Site	d	Not applicable to new plants
139.	Thinning of Carbon Steel Piping in LWRs	d	Not applicable to new plants
146.	Support Flexibility of Equipment and Components	d	Not applicable to new plants
147.	Fire-Induced Alternate Shutdown Control Room Panel Interactions	d	Not applicable to new plants
148.	Smoke Control and Manual Fire-Fighting Effectiveness	d	Not applicable to new plants
155.2	Establish Licensing Requirements For Non-Operating Facilities	d	Not applicable to new plants
156	Systematic Evaluation Program	f	Not applicable to new plants
156.6.1	Pipe Break Effects on Systems and Components	High	The AP1000 is a new plant that takes the effects of a pipe break into account and therefore issue 156.6.1 is not applicable.
163	Multiple Steam Generator Tube Leakage	h (High)	See DCD Subsection 1.9.4.2.3, item 163
168	Environmental Qualification Of Electrical Equipment	f	Not applicable to new plants
178	Effect Of Hurricane Andrew On Turkey Point	d	Not applicable to new plants
180	Notice Of Enforcement Discretion	d	Not applicable to new plants

STD COL 1.9-3

Table 1.9-203 (Sheet 13 of 15)
Listing Of Unresolved Safety Issues And Generic Safety Issues

Action Plan Item/Issue No.	Title	Applicable Screening Criteria	Notes
181	Fire Protection	d	Not applicable to new plants
183	Cycle-Specific Parameter Limits In Technical Specifications	d	Not applicable to new plants
184	Endangered Species	d	Not applicable to new plants
185	Control of Recriticality following Small-Break LOCA in PWRs	h	Not applicable to new plants
186	Potential Risk and Consequences of Heavy Load Drops in Nuclear Power Plants	Continue	1.9.4.2.3 9.1.5.3
189	Susceptibility of Ice Condenser and Mark III Containments to Early Failure from Hydrogen Combustion During a Severe Accident Description	Continue	Not applicable to the AP1000.
191	Assessment Of Debris Accumulation On PWR Sump Performance	h (High)	See DCD Subsections 6.3.2.2.7 and 1.9.4.2.3, item 191
199	Implications of Updated Probabilistic Seismic Hazard Estimates in Central and Eastern United States	Issue to be Prioritized by NRC in the Future	2.5
Human Factors Issues			
HF1.1	Shift Staffing	f	13.1.2.1.4 18.6
HF2.1	Evaluate Industry Training	d	Not applicable to new plants
HF2.2	Evaluate INPO Accreditation	d	Not applicable to new plants
HF2.3	Revise SRP Section 13.2	d	Not applicable to new plants
HF3.1	Develop Job Knowledge Catalog	d	Not applicable to new plants
HF3.2	Develop License Examination Handbook	d	Not applicable to new plants
HF3.5	Develop Computerized Exam System	d	Not applicable to new plants

STD COL 1.9-3

Table 1.9-203 (Sheet 14 of 15)
Listing Of Unresolved Safety Issues And Generic Safety Issues

Action Plan Item/Issue No.	Title	Applicable Screening Criteria	Notes
HF4.2	Procedures Generation Package Effectiveness Evaluation	d	Not applicable to new plants
HF7.1	Human Error Data Acquisition	d	Not applicable to new plants
HF7.2	Human Error Data Storage and Retrieval	d	Not applicable to new plants
HF7.3	Reliability Evaluation Specialist Aids	d	Not applicable to new plants
HF7.4	Safety Event Analysis Results Applications	d	Not applicable to new plants
Chernobyl Issues			
CH1.1A	Symptom-Based EOPs	d	Not applicable to new plants
CH1.1B	Procedure Violations	d	Not applicable to new plants
CH1.2A	Test, Change, and Experiment Review Guidelines	d	Not applicable to new plants
CH1.2B	NRC Testing Requirements	d	Not applicable to new plants
CH1.3A	Revise Regulatory Guide 1.47	d	Not applicable to new plants
CH1.4A	Engineered Safety Feature Availability	d	Not applicable to new plants
CH1.4B	Technical Specification Bases	d	Not applicable to new plants
CH1.4C	Low Power and Shutdown	d	Not applicable to new plants
CH1.5	Operating Staff Attitudes Toward Safety	d	Not applicable to new plants
CH1.6A	Assessment of NRC Requirements on Management	d	Not applicable to new plants
CH1.7A	Accident Management	d	Not applicable to new plants
CH2.1A	Reactivity Transients	d	Not applicable to new plants
CH2.3B	Contamination Outside Control Room	d	Not applicable to new plants

STD COL 1.9-3

Table 1.9-203 (Sheet 15 of 15)
Listing Of Unresolved Safety Issues And Generic Safety Issues

Action Plan Item/Issue No.	Title	Applicable Screening Criteria	Notes
CH2.3C	Smoke Control	d	Not applicable to new plants
CH2.3D	Shared Shutdown Systems	d	Not applicable to new plants
CH2.4A	Firefighting With Radiation Present	d	Not applicable to new plants
CH3.1A	Containment Performance	d	Not applicable to new plants
CH3.2A	Filtered Venting	d	Not applicable to new plants
CH4.3A	Ingestion Pathway Protective Measures	d	Not applicable to new plants
CH4.4A	Decontamination	d	Not applicable to new plants
CH4.4B	Relocation	d	Not applicable to new plants
CH5.1A	Mechanical Dispersal in Fission Product Release	d	Not applicable to new plants
CH5.1B	Stripping in Fission Product Release	d	Not applicable to new plants
CH5.2A	Steam Explosions	d	Not applicable to new plants
CH6.1B	Structural Graphite Experiments	d	Not applicable to new plants
CH6.2	Assessment	d	Not applicable to new plants

Notes (from DCD Table 1.9-2):

(d) Issue is not a design issue (Environmental, Licensing, or Regulatory Impact Issue; or covered in an existing NRC program).

(f) Issue is not an AP1000 design certification issue. Issue is applicable to current operating plants or is programmatic in nature.

(h) Issue is unresolved pending generic resolution (for example, prioritized as High, Medium, or possible resolution identified).

(j) The AP600 DSER (Draft NUREG-0612) identified this item as required to be discussed.

STD COL 1.9-2

Table 1.9-204 (Sheet 1 of 6)
Generic Communications Assessment

Number	Title	Comment
BULLETIN		
80-06	Engineered Safety Feature (ESF) Reset Controls (3/80)	See Note a.
80-10	Contamination of Nonradioactive System and Resulting Potential for Unmonitored, Uncontrolled Release of Radioactivity to Environment (5/80)	Appendix 12AA
80-15	Possible Loss of Emergency Notification System (ENS) with Loss of Offsite Power (6/80)	9.5.2.5.1
02-01	Reactor Pressure Vessel Head Degradation and Reactor Coolant Pressure Boundary Integrity	5.2.4 See Note a.
02-02	Reactor Pressure Vessel Head and Vessel Head Penetration Nozzle Inspection Programs	5.2.4 See Note a.
03-01	Potential Impact of Debris Blockage on Emergency Sump Recirculation at Pressurized-Water Reactors	6.3 See Note a.
03-02	Leakage from Reactor Pressure Vessel Lower Head Penetrations and Reactor Coolant Pressure Boundary Integrity	5.2.4.3 See Note a.
03-03	Potentially Defective 1-inch Valves for Uranium Hexafluoride Cylinders	N/A
03-04	Rebaselining of Data in the Nuclear Materials Management and Safeguards System	N/A One time report.
04-01	Inspection of Alloy 82/182/600 Materials Used in the Fabrication of Pressurizer Penetrations and Steam Space Piping Connections at Pressurized-Water Reactors	See Note a.

STD COL 1.9-2

Table 1.9-204 (Sheet 2 of 6)
Generic Communications Assessment

Number	Title	Comment
05-01	Material Control and Accounting at Reactors and Wet Spent Fuel Storage Facilities	13.6
05-02	Emergency Preparedness and Response Actions for Security-Based Events	13.3
GENERIC LETTERS		
80-22	Transmittal of NUREG-0654 “Criteria for Preparation and Evaluation of Radiological Emergency Response Plans” (3/80)	13.3
80-26	Qualifications of Reactor Operators (3/80)	13.2 18.10
80-51	On-Site Storage Of Low-Level Waste (6/90)	11.4.6
80-55	Possible Loss of Hotline With Loss Of Off-Site Power	See Bulletin 80-15
80-77	Refueling Water Level (8/80)	16.1 See Note a.
80-094	Emergency Plan (11/80)	13.3
80-099	Technical Specification Revisions for Snubber Surveillance (11/80)	Snubbers no longer in generic Tech Specs See Note a.
80-108	Emergency Planning (12/80)	13.3
81-02	Analysis, Conclusions and Recommendations Concerning Operator Licensing (1/81)	13.2
81-10	Post-TMI Requirements for the Emergency Operations Facility (2/81)	13.3
81-38	Storage of Low-Level Radioactive Waste at Power Reactor Sites (11/81)	11.4.6

STD COL 1.9-2

Table 1.9-204 (Sheet 3 of 6)
Generic Communications Assessment

	Number	Title	Comment
	81-40	Qualifications of Reactor Operators (12/81)	13.1 13.2
	82-02	Commission Policy on Overtime (2/82)	16.1
	82-04	Use of INPO See-in Program (3/82)	13.1 13.5
VEGP COL 1.9-2	82-12	Nuclear Power Plant Staff Working Hours (6/82)	13.1.2.1.2 13.1.2.1.3 13.1.2.1.4
STD COL 1.9-2	82-13	Reactor Operator and Senior Reactor Operator Examinations (6/82)	For information only.
	82-18	Reactor Operator and Senior Reactor Operator Requalification Examinations (10/82)	13.2
	83-06	Certificates and Revised Format For Reactor Operator and Senior Reactor Operator Licenses (1/83)	13.2
	83-11	Licensee Qualification for Performing Safety Analyses in Support of Licensing Actions (2/83)	13.1 See Note a.
	83-12	Issuance of NRC FORM 398 - Personal Qualifications Statement - Licensee (2/83)	13.2
	83-17	Integrity of the Requalification Examinations for Renewal of Reactor Operator and Senior Reactor Operator Licenses (4/83)	13.1
	83-22	Safety Evaluation of "Emergency Response Guidelines" (6/83)	18.9
	83-40	Operator Licensing Examination (12/83)	13.2
	84-10	Administration of Operating Tests Prior to Initial Criticality (10 CFR 55.25) (4/84)	13.2

STD COL 1.9-2

Table 1.9-204 (Sheet 4 of 6)
Generic Communications Assessment

Number	Title	Comment
84-14	Replacement and Requalification Training Program (5/84)	13.2
84-17	Annual Meeting to Discuss Recent Developments Regarding Operator Training, Qualifications, and Examinations (7/84)	Administrative
84-20	Scheduling Guidance for Licensee Submittals of Reloads That Involve Unreviewed Safety Questions (8/84)	13.5
85-04	Operating Licensing Examinations (1/85)	Administrative
85-14	Commercial Storage At Power Reactor Sites Of Low Level Radioactive Waste Not Generated By The Utility (8/85)	Administrative
85-18	Operator Licensing Examinations (9/85)	Administrative
85-19	Reporting Requirements On Primary Coolant Iodine Spikes (9/85)	16.1
86-14	Operator Licensing Examinations (8/86)	Administrative
87-14	Operator Licensing Examinations (8/87)	Administrative
88-05	Boric Acid Corrosion of Carbon Steel Reactor Pressure Boundary Components in PWR Plants (3/88)	5.2.4 See Note a.
88-18	Plant Record Storage on Optical Disk (10/88)	17
89-07	Power Reactors Safeguards Contingency Planning for Surface Vehicle Bombs (4/89)	13.6
89-07 S1	Power Reactor Safeguards Contingency Planning for Surface Vehicle Bombs	13.6
89-12	Operator Licensing Examination (7/89)	13.2

STD COL 1.9-2

Table 1.9-204 (Sheet 5 of 6)
Generic Communications Assessment

Number	Title	Comment
89-15	Emergency Response Data System (8/89)	9.5.2 13.3
89-17	Planned Administrative Changes to the NRC Operator Licensing Written Examination Process (9/89)	N/A
91-14	Emergency Telecommunications (9/91)	9.5.2 13.3
91-16	Licensed Operators and Other Nuclear Facility Personnel Fitness for Duty (10/91)	13.7
92-01	Reactor Vessel Structural Integrity (1/92)	5.3.2.6.3
93-01	Emergency Response Data System Test Program	13.3
93-03	Verification of Plant Records	17
96-02	Reconsideration of Nuclear Power Plant Security Requirements Associated with an Internal Threat (2/96)	13.6
03-01	Control Room Habitability	6.4 See Note a.
04-01	Requirements for Steam Generator Tube Inspections	5.4.2.5 16.1 See Note a.
04-02	Potential Impact of Debris Blockage on Emergency Recirculation during Design Basis Accidents at Pressurized-Water Reactors	6.3.8.1 See Note a.
06-01	Steam Generator Tube Integrity and Associated Technical Specifications	5.4.2.5 16.1 See Note a.

STD COL 1.9-2

Table 1.9-204 (Sheet 6 of 6)
Generic Communications Assessment

Number	Title	Comment
06-02	Grid Reliability and the Impact on Plant Risk and the Operability of Offsite Power	8.2.1.1 8.2.2 See Note a.
06-03	Potentially Nonconforming Hemyc and MT Fire Barrier Configurations	9.5.1 See Note a.
07-01	Inaccessible or Underground Power Cable Failures that Disable Accident Mitigation Systems or Cause Plant Transients.	17.6 See Note a.

(a) The design aspects of this topic are as stated in the AP1000 DCD.

Add the following section after DCD Section 1.9.

1.10 NUCLEAR POWER PLANTS TO BE OPERATED ON MULTI-UNIT SITES

STD SUP 1.10-1 The certification for the AP1000 is for a single unit. Dual siting of AP1000 is achievable, provided that the centerlines of the units are sufficiently separated. The primary consideration in setting this separation distance is the space needed to support plant construction via the use of a heavy-lift crane.

Security controls during construction and operation are addressed in the Physical Security Plan.

Management and administrative controls are established to identify potential hazards to structures, systems, and components (SSCs) of an operating unit as a result of construction activities at a unit under construction. Controls within this section are not required unless there is an operating unit on the site, i.e., a unit with fuel loaded into the reactor vessel. Advance notification, scheduling and planning allow site management to implement interim controls to reduce the potential for impact to SSCs.

This section presents an assessment of the potential impacts of construction of one unit on SSCs important to safety for an operating unit, in accordance with 10 CFR 52.79(a)(31). This assessment includes:

- Identification of potential construction activity hazards
- Identification of SSCs important to safety and limiting conditions for operation (LCOs) for the operating unit
- Identification of potentially impacted SSCs and LCOs
- Identification of applicable managerial and administrative controls

1.10.1 POTENTIAL CONSTRUCTION ACTIVITY HAZARDS

VEGP SUP 1.10-1 The power blocks for Units 3 and 4 have a minimum separation of at least 800 feet between plant centerlines.

STD SUP 1.10-1 Construction activities may include site exploration, grading, clearing, and installation of drainage and erosion-control measures; boring, drilling, dredging, pile driving and excavating; transportation, storage and warehousing of equipment; and construction, erection, and fabrication of new facilities.

Construction activities and their representative hazards to an operating unit are shown in Table 1.10-201.

1.10.2 POTENTIALLY IMPACTED SSCS AND LIMITING CONDITIONS FOR OPERATION

The construction activities described above were reviewed for possible impact to operating unit SSCs important to safety.

VEGP SUP 1.10-1

- VEGP Unit 1 and Unit 2 SSCs important to safety are described in Chapter 3 of the Updated Final Safety Analysis Report (UFSAR).
- VEGP Unit 1 and Unit 2 LCOs are located in Appendix A of the Unit 1 and Unit 2 Operating Licenses (Technical Specifications).
- Unit 3 and Unit 4 SSCs important to safety are described in FSAR Chapter 3.
- As indicated in Chapter 16, the LCOs for Units 3 and 4 are located in Part 4 of the COL Application.

STD SUP 1.10-1

This assessment identified administrative and managerial controls to avoid impacts to SSCs from construction. The results of the assessment are presented in Table 1.10-202.

1.10.3 MANAGERIAL AND ADMINISTRATIVE CONTROLS

To eliminate or mitigate construction hazards that could potentially impact operating unit SSCs important to safety, specific managerial and administrative controls have been identified as shown in Table 1.10-203.

Although not all of the managerial and administrative construction controls are necessary to protect the operating unit, the identified controls are applied to any operating unit as a conservative measure. This conservative approach provides reasonable assurance of protecting the identified SSCs from potential construction hazards and preventing the associated LCOs specified in the operating unit Technical Specifications from being exceeded as a result of construction activities, as discussed below.

The majority of the operating unit SSCs important to safety are contained and protected within safety-related structures. The managerial controls protect these internal SSCs from postulated construction hazards by maintaining the integrity and design basis of the safety-related structures and foundations. Heavy load drop controls, crane boom failure standoff requirements, ground vibration controls

and construction generated missile(s) control are examples of managerial controls that provide this protection.

Other managerial controls support maintaining offsite power, control of hazardous materials and gases, and protection of cooling water supplies and safety system instrumentation. These managerial controls prevent or mitigate external construction impacts that could affect SSCs important to safety. These controls also prevent or mitigate unnecessary challenges to safety systems caused by plant construction hazards, such as disruption of offsite transmission lines or impact to plant cooling water supplies.

STD SUP 1.10-1

Table 1.10-201 (Sheet 1 of 3)
Potential Hazards from Construction Activities

CONSTRUCTION ACTIVITY HAZARD	POTENTIAL IMPACT
Site Exploration, Grading, Clearing, Installation of Drainage and Erosion Control Measures	• Overhead Power Lines • Transmission Towers • Underground Conduits, Piping, Tunnels, etc. • Site Access and Egress • Drainage Facilities and Structures • Onsite Transportation Routes • Slope Stability • Soil Erosion and Local Flooding • Construction-Generated Dust and Equipment Exhausts • Encroachment on Plant Control Boundaries • Encroachment on Structures and Facilities
Boring, Drilling, Pile Driving, Dredging, Demolition, Excavation	• Underground Conduits, Piping, Tunnels, etc. • Foundation Integrity • Structural Integrity • Slope Stability • Erosion and Turbidity Control • Groundwater and Groundwater Monitoring Facilities • Dewatering Structures, Systems and Components • Nearby Structures, Systems and Components • Vibratory Ground Motion

STD SUP 1.10-1

Table 1.10-201 (Sheet 2 of 3)
Potential Hazards from Construction Activities

CONSTRUCTION ACTIVITY HAZARD	POTENTIAL IMPACT
Equipment Movement, Material Delivery, Vehicle Traffic	• Overhead Power Lines • Transmission Towers • Underground Conduits, Piping, Tunnels • Crane Load Drops • Crane or Crane Boom Failures • Vehicle Accidents • Rail Car Derailments
Equipment and Material Laydown, Storage, Warehousing	• Releases of Stored Flammable, Hazardous or Toxic Materials • Wind-Generated, Construction-Related Debris and Missiles
General Construction, Erection, Fabrication	• Physical Integrity of Structures, Systems and Components • Adjacent or Nearby Structures, Systems and Components • Instrumentation and Control Systems and Components • Electrical Systems and Components·Cooling Water Systems and Components • Waste Heat Environmental Controls and Parameters • Radioactive Waste Release Points and Parameters • Abandonment of Structures, Systems or Components • Relocation of Structures, Systems or Components • Removal of Structures, Systems or Components

STD SUP 1.10-1

Table 1.10-201 (Sheet 3 of 3)
Potential Hazards from Construction Activities

CONSTRUCTION ACTIVITY HAZARD	POTENTIAL IMPACT
Connection, Integration, Testing	• Instrumentation and Control Systems and Components • Electrical and Power Systems and Components • Cooling Water Systems and Components

STD SUP 1.10-1

Table 1.10-202 (Sheet 1 of 2)
Hazards During Construction Activities

CONSTRUCTION HAZARD	IMPACTED SSCs
Impact on Overhead Power Lines	• Offsite Power System
Impact on Transmission Towers	• Offsite Power Systems
Impact on Utilities, Underground Conduits, Piping, Tunnels, Tanks	• Fire Protection System • Service Water System[1]
Impact of Construction-Generated Dust and Equipment Exhausts	• Control Room Emergency HVAC Systems[1] • Diesel Generators
Impact of Vibratory Ground Motion	• Offsite Power System • Onsite Power Systems • Instrumentation and Seismic Monitors
Impact of Crane or Crane Boom Failures	• Safety-Related Structures
Impact of Releases of Flammable, Hazardous or Toxic Materials	• Control Room Emergency HVAC Systems[1]
Impact of Wind-Generated, Construction-Related Debris and Missiles	• Safety-Related Structures • Control Room Emergency HVAC Systems[1]
Impact on Electrical Systems and Components	• Offsite Power System • Onsite Power Systems
Impact on Cooling Water Systems and Components	• Service Water System[1] • Ultimate Heat Sink[1]
Impact on Radioactive Waste Release Points and Parameters	• Gaseous and Liquid Radioactive Waste Management Systems

STD SUP 1.10-1

Table 1.10-202 (Sheet 2 of 2)
Hazards During Construction Activities

CONSTRUCTION HAZARD	IMPACTED SSCs
Impact of Relocation of Structures, Systems or Components	• Fire Protection System • Service Water System[1]
Impact of Site Groundwater Depression and Dewatering	• Safety-Related Structures and Foundations
Impact of Equipment Delivery and Heavy Equipment Delivery	• Safety-Related Structures and Foundations

[1] Not applicable to AP1000 operating units.

STD SUP 1.10-1

Table 1.10-203 (Sheet 1 of 2)
Managerial and Administrative Construction Controls

CONSTRUCTION HAZARDS TO SSCs	MANAGERIAL CONTROL
Impact on Transmission Power Lines and Offsite Power Lines	• Safe standoff clearance distances are established for transmission power lines, including verification of standoff distance for modules, the reactor vessel and other equipment to be transported beneath energized electric lines to meet minimum standoff clearance requirements. • Physical warning or caution barriers and signage are erected along transport routes.
Impact on Transmission Towers	• Establish controls or physical barriers to avoid equipment collisions with electric transmission support towers
Impact on Utilities, Underground Conduits, Piping, Tunnels, Tanks	• Grading, excavation, and pile driving require location and identification of equipment or underground structures that must be relocated, removed, or left in place and protected prior to the work activity.
Impact of Construction-Generated Dust and Equipment Exhausts	• Fugitive dust and dust generation is controlled. Potentially affected system air intakes and filters are periodically monitored.
Impact of Vibratory Ground Motion	• Construction administrative procedures, methods, and controls are implemented to prevent exceeding ground vibration and instrumentation limit settings.
Impact of Crane or Crane Boom Failures	• Construction standoff distance controls prevent heavy load impacts from crane boom failures and crane load drops. Drop analyses may be substituted if minimum standoff distances are not practical.

STD SUP 1.10-1

Table 1.10-203 (Sheet 2 of 2)
Managerial and Administrative Construction Controls

CONSTRUCTION HAZARDS TO SSCs	MANAGERIAL CONTROL
Impact of Releases of Flammable, Hazardous or Toxic Materials and Missile Generation	• Environmental, safety and health controls limit transport, storage, quantities, type and use of flammable, hazardous, toxic materials and compressed gasses. Construction safety and storage controls maintain potential missile generation events from compressed gasses within the operating unit design basis.
Impact of Wind-Generated, Construction-Related Debris and Missiles	• Administrative controls address equipment, material storage and transport during high winds or high wind warnings. • Plant procedures are followed during severe weather conditions which may call for power reduction or shut down.
Impact on Electrical Systems and Components	• Affected operating unit electrical systems and components within the construction area are identified and isolated or relocated or otherwise protected.
Impact on Cooling Water Systems and Components	• Transport of heavy load equipment over buried cooling water piping is prohibited without evaluation.
Impact on Radioactive Waste Release Points and Parameters	• Engineering evaluation and managerial controls are implemented, as necessary, to prevent radioactive releases beyond the established limits due to construction activity.
Impact of Relocation of Structures, Systems or Components	• Administrative controls identify SSCs that require relocation. Temporary or permanent design changes are implemented if necessary.
Impact of Equipment Delivery and Heavy Equipment Delivery	• Rail transport speed limits and maximum rail loading weights onsite are established. • General equipment and heavy equipment movement controls and limitations are established.

APPENDIX 1A
CONFORMANCE WITH REGULATORY GUIDES

This section of the referenced DCD is incorporated by reference with the following departures and/or supplements.

STD COL 1.9-1 Appendix 1AA is provided to supplement the information in DCD Appendix 1A.

APPENDIX 1B
SEVERE ACCIDENT MITIGATION DESIGN ALTERNATIVES

VEGP SUP 1B-1 DCD Appendix 1B is not incorporated into this FSAR. Rather, the severe accident mitigation design alternatives were addressed in the ESP Environmental Report and evaluated in the Draft Environmental Impact Statement for an Early Site Permit (ESP) at the Vogtle Electric Generating Plant Site. As indicated in 10 CFR Part 52, Appendix D, Section III.B, "...the evaluation of severe accident mitigation design alternatives in appendix 1B of the generic DCD are not part of this appendix."

APPENDIX 1AA
CONFORMANCE WITH REGULATORY GUIDES

STD COL 1.9-1

DIVISION 1 — Power Reactors

Regulatory Guide 1.7, Rev. 3, 03/07 – Control of Combustible Gas Concentrations in Containment

Conformance with Revision 2 of the Regulatory Guide is documented in the DCD.

Regulatory Guide 1.8, Rev. 3, 5/00 – Qualification and Training of Personnel for Nuclear Power Plants

Criteria Section	Referenced Criteria	FSAR Position	Clarification/ Summary Description of Exceptions
C.1		Conforms	
C.2	Section 4 of ANSI/ANS-3.1-1993	Exception	Not able to meet Regulatory Guide 1.8, Rev. 3 qualification requirements for licensed personnel prior to operations.

Regulatory Guide 1.12, Rev. 2, 3/97 – Nuclear Power Plant Instrumentation for Earthquakes

Conformance of the design aspects is as stated in the DCD. Conformance with Revision 2 of this Regulatory Guide for programmatic and/or operational aspects is documented below.

C.8		Conforms	

Regulatory Guide 1.13, Rev. 2, 03/07 - Spent Fuel Storage Facility Design Basis

Conformance with Revision 1 of the Regulatory Guide is documented in the DCD.

Regulatory Guide 1.16, Rev. 4, 8/75 – Reporting of Operating Information – Appendix A Technical Specifications

C.1.a		Conforms	
C.1.b,c		Exception	The annual operating report and monthly operating report are submitted in accordance with the Technical Specifications
C.2, C.4		Exception	Event reporting is performed in accordance with 10 CFR 50.72 and 50.73 utilizing the guidance of NUREG-1022.
C.3		Exception	Technical Specification reporting requirements are implemented, as required.

	Criteria Section	Referenced Criteria	FSAR Position	Clarification/ Summary Description of Exceptions
STD COL 1.9-1	**Regulatory Guide 1.20, Rev. 3, 3/07 – Comprehensive Vibration Assessment Program For Reactor Internals During Preoperational and Initial Startup Testing**			
	Conformance with Revision 2 of the Regulatory Guide is documented in the DCD.			
	Regulatory Guide 1.21, Rev. 1, 6/74 – Measuring Evaluating, and Reporting Radioactivity in Solid Wastes and Releases of Radioactive Materials in Liquid and Gaseous Effluents From Light-Water-Cooled Nuclear Power Plants			
	Conformance of the design aspects is as stated in the DCD. Conformance with Revision 1 of this Regulatory Guide for programmatic and/or operational aspects is documented below.			
	C.1		Conforms	
	C.3-C.5		Conforms	
	C.6		Exception	ANSI N13.1-1999 is used.
	C.7-C.14		Conforms	
VEGP COL 1.9-1	**Regulatory Guide 1.23, Pr-1, September 1980 – Meteorological Monitoring Programs for Nuclear Power Plants**			
	General		Note a	
STD COL 1.9-1	**Regulatory Guide 1.26, Rev. 4, 3/07 – Quality Group Classifications and Standards for Water-, Steam-, and Radioactive-Waste-Containing Components of Nuclear Power Plants**			
	Conformance with Revision 3 of the Regulatory Guide is documented in the DCD.			
VEGP COL 1.9-1	**Regulatory Guide 1.29, Rev. 3, 9/78 and Rev. 4, 3/07 – Seismic Design Classification**			
	Conformance with Revision 3 of the Regulatory Guide is documented in the DCD.			
			Note a	
STD COL 1.9-1	**Regulatory Guide 1.30, Rev. 0, 8/72 – Quality Assurance Requirements for the Installation, Inspection, and Testing of Instrumentation and Electric Equipment**			
			Exception	Quality assurance is in accordance with the QAPD.
	Regulatory Guide 1.32, Rev. 3, 03/04 – Criteria for Power Systems for Nuclear Power Plants			
	Conformance with Revision 2 of the Regulatory Guide is documented in the DCD.			

Criteria Section	Referenced Criteria	FSAR Position	Clarification/ Summary Description of Exceptions

STD COL 1.9-1

Regulatory Guide 1.33, Rev. 2, 2/78 – Quality Assurance Program Requirements (Operation)

Exception Quality assurance is in accordance with the QAPD.

Regulatory Guide 1.37, Rev. 1, 3/07 – Quality Assurance Requirements for Cleaning of Fluid Systems and Associated Components of Water Cooled Nuclear Power Plants

Conformance with Revision 0 of the Regulatory Guide is documented in the DCD. Conformance of the design aspects is as stated in the DCD. Conformance with Revision 1 of this Regulatory Guide for programmatic and/or operational aspects is documented below.

Exception Quality assurance is in accordance with the QAPD.

Regulatory Guide 1.38, Rev. 2, 5/77 – Quality Assurance Requirements for Packaging, Shipping, Receiving, Storage and Handling of Items for Water-Cooled Nuclear Power Plants

Conformance of the design aspects is as stated in the DCD. Conformance with Revision 2 of this Regulatory Guide for programmatic and/or operational aspects is documented below.

Exception Quality assurance is in accordance with the QAPD.

Regulatory Guide 1.39, Rev. 2, 9/77 – Housekeeping Requirements for Water-Cooled Nuclear Power Plants

Conformance of the design aspects is as stated in the DCD. Conformance with Revision 2 of this Regulatory Guide for programmatic and/or operational aspects is documented below.

Exception Quality assurance is in accordance with the QAPD.

Regulatory Guide 1.53, Rev. 2, 11/03 – Application of the Single-Failure Criterion to Nuclear Power Plant Protection Systems

Conformance with Revision 0 of the Regulatory Guide is documented in the DCD.

Conforms

	Criteria Section	Referenced Criteria	FSAR Position	Clarification/ Summary Description of Exceptions
STD COL 1.9-1	**Regulatory Guide 1.54, Rev. 1, 7/00 – Service Level I, II, And III Protective Coatings Applied To Nuclear Power Plants**			
	Conformance of the design aspects is as stated in the DCD. Conformance with Revision 1 of this Regulatory Guide for programmatic and/or operational aspects is documented below.			
			Conforms	
	Regulatory Guide 1.57, Rev. 1, 3/07 – Design Limits and Loading Combinations for Metal Primary Reactor Containment System Components			
	Conformance with Revision 0 of the Regulatory Guide is documented in the DCD.			
			Conforms	
VEGP COL 1.9-1	**Regulatory Guide 1.59, Rev. 2, 8/77 – Design Basis Floods for Nuclear Power Plants**			
			Note a	
	Regulatory Guide 1.60, Rev. 1, 12/73 – Design Response Spectra for Seismic Design of Nuclear Power Plants			
			Note a	
STD COL 1.9-1	**Regulatory Guide 1.61, Rev. 1, 3/07 – Damping Values for Seismic Design of Nuclear Power Plants**			
	Conformance with Revision 0 of the Regulatory Guide is documented in the DCD.			
	Regulatory Guide 1.68, Rev. 3, 3/07 – Initial Test Program for Water-Cooled Nuclear Power Plants			
	Conformance with Revision 2 of the Regulatory Guide is documented in the DCD. Conformance of the design aspects is as stated in the DCD. Conformance with Revision 3 of this Regulatory Guide for programmatic and/or operational aspects is documented below.			
	C2-C.9 Appendix B Appendix C		Conforms	
VEGP COL 1.9-1	**Regulatory Guide 1.70, Rev. 3, 11/78, Standard Format and Content of Safety Analysis Reports for Nuclear Power Plants (LWR Edition)**			
	General		Exception	The format and content of the FSAR follow Regulatory Guide 1.206 and AP 1000 Design Control Document as required by Appendix D of 10 CFR Part 52. Note a

	Criteria Section	Referenced Criteria	FSAR Position	Clarification/ Summary Description of Exceptions
STD COL 1.9-1	**Regulatory Guide 1.71, Rev. 1, 3/07 – Welder Qualification for Areas of Limited Accessibility**			
	Conformance with Revision 0 of the Regulatory Guide is documented in the DCD.			
	Regulatory Guide 1.75, Rev. 3, 2/05 – Criteria for Independence of Electrical Safety Systems			
	Conformance with Revision 2 of the Regulatory Guide is documented in the DCD.			
VEGP COL 1.9-1	**Regulatory Guide 1.76, Rev. 1, 3/07 – Design-Basis Tornado and Tornado Missiles for Nuclear Power Plants**			
			Note a	
	Conformance with Revision 0 of the Regulatory Guide is documented in the DCD.			
	Regulatory Guide 1.78, Rev. 1, 12/01 – Evaluating the Habitability of a Nuclear Power Plant Control Room During a Postulated Hazardous Chemical Release			
			Note a	
STD COL 1.9-1	**Regulatory Guide 1.82, Rev. 3, 11/03 – Water Sources for Long-Term Recirculation Cooling Following a Loss-of-Coolant Accident**			
	Conformance with Revision 2 of the Regulatory Guide is documented in the DCD.			
	Regulatory Guide 1.84, Rev. 33, 8/05 – Design, Fabrication, and Materials Code Case Acceptability, ASME Section III			
	Conformance with Revision 31 of the Regulatory Guide is documented in the DCD.			
	Regulatory Guide 1.86, Rev. 0, 6/74 - Termination of Operating Licenses for Nuclear Reactors			
	This Regulatory Guide is outside the scope of the FSAR.			
VEGP COL 1.9-1	**Regulatory Guide 1.91, Rev. 1, 2/78 – Evaluations of Explosions Postulated to Occur on Transportation Routes Near Nuclear Power Plants**			
	Conformance of the design aspects is as stated in the DCD. Conformance with Revision 1 of this Regulatory Guide for programmatic and/or operational aspects is documented below.			
			Note a	
STD COL 1.9-1	**Regulatory Guide 1.92, Rev. 2, 07/06 – Combining Modal Responses and Spatial Components in Seismic Response Analysis**			
	Conformance with Revision 1 of the Regulatory Guide is documented in the DCD.			

	Criteria Section	Referenced Criteria	FSAR Position	Clarification/ Summary Description of Exceptions
STD COL 1.9-1	**Regulatory Guide 1.94, Rev. 1, 4/76 – Quality Assurance Requirements for Installation, Inspection and Testing of Structural Concrete and Structural Steel During the Construction Phase of Nuclear Power Plants**			
			Exception	Quality assurance is in accordance with the QAPD.
	Regulatory Guide 1.97, Rev. 4, 6/06 – Criteria For Accident Monitoring Instrumentation For Nuclear Power Plants			
	Conformance with Revision 3 of the Regulatory Guide is documented in the DCD.			
VEGP COL 1.9-1	**Regulatory Guide 1.101, Rev. 5, 6/05 – Emergency Response Planning and Preparedness for Nuclear Power Reactors**			
			Note a	
	Regulatory Guide 1.102, Rev. 1, 9/76 – Flood Protection for Nuclear Power Plants			
			Note a	
	Regulatory Guide 1.109, Rev. 1, 10/77 – Calculation of Annual Doses to Man from Routine Releases of Reactor Effluents for the Purpose of Evaluating Compliance with 10 CFR Part 50, Appendix I			
	Conformance of the design aspects is as stated in the DCD. Conformance with Revision 1 of this Regulatory Guide for programmatic and/or operational aspects is documented below.			
			Note a	
STD COL 1.9-1	**Regulatory Guide 1.110, Rev. 0, 3/76 – Cost-Benefit Analysis for Radwaste Systems for Light-Water-Cooled Nuclear Power Reactors**			
	Conformance of the design aspects is as stated in the DCD. Conformance with Revision 0 of this Regulatory Guide for programmatic and/or operational aspects is documented below.			
	General		Conforms	
VEGP COL 1.9-1	**Regulatory Guide 1.111, Rev. 1, 7/77 – Methods for Estimating Atmospheric Transport and Dispersion of Gaseous Effluents in Routine Releases from Light-Water-Cooled Reactors**			
			Note a	

	Criteria Section	Referenced Criteria	FSAR Position	Clarification/ Summary Description of Exceptions
STD COL 1.9-1	**Regulatory Guide 1.112, Rev. 1, 3/07 – Calculation of Releases of Radioactive Materials in Gaseous and Liquid Effluents from Light-Water-Cooled Power Reactors**			
			Note a	
VEGP COL 1.9-1	**Regulatory Guide 1.113, Rev. 1, 4/77 – Estimating Aquatic Dispersion of Effluents from Accidental and Routine Reactor Releases for the Purpose of Implementing Appendix I**			
			Note a	
STD COL 1.9-1	**Regulatory Guide 1.114, Rev. 2, 5/89 – Guidance to Operators at the Controls and to Senior Operators in the Control Room of a Nuclear Power Unit**			
	General		Conforms	
	Regulatory Guide 1.115, Rev. 1, 7/77 – Protection Against Low-Trajectory Turbine Missiles			
	Conformance of the design aspects is as stated in the DCD. Conformance with Revision 1 of this Regulatory Guide for programmatic and/or operational aspects is documented below.			
	General		Conforms	
	Regulatory Guide 1.116, Rev. 0-R, 5/77 – Quality Assurance Requirements for Installation, Inspection, and Testing of Mechanical Equipment and Systems			
			Exception	Quality assurance is in accordance with the QAPD.
	Regulatory Guide 1.124, Rev. 2, 02/07 – Service Limits and Loading Combinations for Class 1 Linear-Type Supports			
	Conformance with Revision 1 of the Regulatory Guide is documented in the DCD.			
VEGP COL 1.9-1	**Regulatory Guide 1.125, Rev. 1, 10/78 – Physical Models for Design and Operation of Hydraulic Structures and Systems of Nuclear Power Plants**			
			Note a	
STD COL 1.9-1	**Regulatory Guide 1.128, Rev. 2, 2/07 – Installation Design and Installation of Vented Lead-Acid Storage Batteries for Nuclear Power Plants**			
	Conformance with Revision 1 of the Regulatory Guide is documented in the DCD.			
	Regulatory Guide 1.129, Rev. 2, 2/07 – Maintenance, Testing, and Replacement of Vented Lead-Acid Storage Batteries for Nuclear Power Plants			

	Criteria Section	Referenced Criteria	FSAR Position	Clarification/ Summary Description of Exceptions
	General	IEEE Std. 450-2002	Exception	Approved Generic Technical Specifications are based on IEEE Std 450-1995.
STD COL 1.9-1	**Regulatory Guide 1.130, Rev. 2, 3/07 - Service Limits and Loading Combinations for Class 1 Plate-And-Shell-Type Supports**			
	Conformance with Revision 1 of the Regulatory Guide is documented in the DCD.			
VEGP COL 1.9-1	**Regulatory Guide 1.132, Rev. 2, 10/03 – Site Investigations for Foundations of Nuclear Power Plants**			
			Note a	
STD COL 1.9-1	**Regulatory Guide 1.133, Rev. 1, 5/81 – Loose-Part Detection Program for the Primary System of Light-Water-Cooled Reactors**			
	Conformance of the design aspects is as stated in the DCD. Conformance with Revision 1 of this Regulatory Guide for programmatic and/or operational aspects is documented below.			
	C.3a		Conforms	
	C.6		Conforms	
	Regulatory Guide 1.134, Rev. 3, 3/98 – Medical Evaluation of Licensed Personnel at Nuclear Power Plants			
	General		Conforms	
	Regulatory Guide 1.135, Rev. 0, 9/77 – Normal Water Level and Discharge at Nuclear Power Plants			
	Conformance of the design aspects is as stated in the DCD. Conformance with Revision 0 of this Regulatory Guide for programmatic and/or operational aspects is documented below.			
	General		Conforms	
VEGP COL 1.9-1	**Regulatory Guide 1.138, Rev. 2, 12/03 – Laboratory Investigations of Soils and Rocks for Engineering Analysis and Design of Nuclear Power Plants**			
			Note a	
STD COL 1.9-1	**Regulatory Guide 1.139, Rev. 0, 5/78 – Guidance for Residual Heat Removal**			
	Conformance of the design aspects is as stated in the DCD. Conformance with Revision 0 of this Regulatory Guide for programmatic and/or operational aspects is documented below.			
	C.7		Exception	Quality assurance is in accordance with the QAPD.

	Criteria Section	Referenced Criteria	FSAR Position	Clarification/ Summary Description of Exceptions
STD COL 1.9-1	**Regulatory Guide 1.140, Rev. 2, 6/01 – Design, Inspection, and Testing Criteria for Air Filtration and Adsorption Units of Normal Atmosphere Cleanup Systems in Light-Water-Cooled Nuclear Power Plants**			
	Conformance of the design aspects is as stated in the DCD. Conformance with Revision 2 of this Regulatory Guide for inspection/testing programmatic and/or operational aspects is documented below.			
	C.1		Conforms	Testing is in accordance with this Regulatory Guide.
	C.4		Conforms	Component qualification testing is in accordance with this Regulatory Guide.
	C.6		Conforms	In-place testing is in accordance with this Regulatory Guide.
	C.7		Conforms	Laboratory testing criteria for activated carbon is in accordance with this Regulatory Guide.
	Regulatory Guide 1.143, Rev. 2, 11/01 – Design Guidance for Radioactive Waste Management Systems, Structures, and Components Installed in Light-Water-Cooled Nuclear Power Plants			
	Conformance of the design aspects is as stated in the DCD. Conformance with Revision 2 of this Regulatory Guide for programmatic and/or operational aspects is documented below.			
	General		Conforms	
VEGP COL 1.9-1	**Regulatory Guide 1.145, Rev. 1, 11/82 (Revised 2/83 to correct page 1.145-7) – Atmospheric Dispersion Models for Potential Accident Consequence Assessments at Nuclear Power Plants**			
			Note a	
STD COL 1.9-1	**Regulatory Guide 1.147, Rev. 15, 10/07 – Inservice Inspection Code Case Acceptability, ASME Section XI, Division 1**			
	Conformance with Revision 12 of the Regulatory Guide is documented in the DCD. Conformance of the design aspects is as stated in the DCD. Conformance with Revision 14 of this Regulatory Guide for programmatic and/or operational aspects is documented below.			
	General		Conforms	

Criteria Section	Referenced Criteria	FSAR Position	Clarification/ Summary Description of Exceptions
STD COL 1.9-1	**Regulatory Guide 1.149, Rev. 3, 10/01 – Nuclear Power Plant Simulation Facilities for Use in Operator Training and License Examinations**		
C.1		Conforms	During cold licensing, training is conducted using a simulator with limited scope in accordance with Appendix D of ANSI/ ANS-3.5-1998. Operator Licensing examinations are conducted on a simulator meeting the applicable requirements of ANSI/ANS-3.5-1998.
	Regulatory Guide 1.150, Rev. 1, 2/83 – Ultrasonic Testing of Reactor Vessel Welds During Preservice and Inservice Examinations		
	Conformance with Revision 1 of the Regulatory Guide is documented in the DCD. Conformance of the design aspects is as stated in the DCD. The programmatic and/or operational aspects are not applicable since this guidance was withdrawn by NRC (Ref. 73 FR 776602/11/2008)		
	Regulatory Guide 1.152, Rev. 2, 1/06 – Criteria for Use of Computers in Safety Systems of Nuclear Power Plants		
	Conformance with Revision 1 of the Regulatory Guide is documented in the DCD. Conformance of the design aspects is as stated in the DCD. Conformance with Revision 2 of this Regulatory Guide for programmatic and/or operational aspects is documented below.		
General		Exception	Conformance is to Revision 1 of Regulatory Guide 1.152.
	Regulatory Guide 1.154, Rev. 0, 1/87 – Format and Content of Plant-Specific Pressurized Thermal Shock Safety Analysis Reports for Pressurized Water Reactors		
General		Conforms	
	Regulatory Guide 1.159, Rev. 1, 10/03 – Assuring the Availability of Funds for Decommissioning Nuclear Reactors		
General		N/A	This Regulatory Guide is outside the scope of the FSAR.
	Regulatory Guide 1.160, Rev. 2, 3/97 – Monitoring the Effectiveness of Maintenance at Nuclear Power Plants		
General		Conforms	
	Regulatory Guide 1.161, Rev. 0, 6/95 – Evaluation of Reactor Pressure Vessels with Charpy Upper-Shelf Energy Less Than 50 Ft-Lb.		

	Criteria Section	Referenced Criteria	FSAR Position	Clarification/ Summary Description of Exceptions
	Conformance of the design aspects is as stated in the DCD. Conformance with Revision 0 of this Regulatory Guide for programmatic and/or operational aspects is documented below.			
	General		Conforms	
STD COL 1.9-1	**Regulatory Guide 1.162, Rev. 0, 2/96 – Format and Content of Report for Thermal Annealing of Reactor Pressure Vessels**			
			N/A	This Regulatory Guide is outside the scope of the FSAR.
	Regulatory Guide 1.163, Rev. 0, 9/95 – Performance-Based Containment Leak-Test Program			
	Conformance of the design aspects is as stated in the DCD. Conformance with Revision 0 of this Regulatory Guide for programmatic and/or operational aspects is documented below.			
	General		Conforms	
VEGP COL 1.9-1	**Regulatory Guide 1.165, Rev. 0, 3/97 – Identification and Characterization of Seismic Sources and Determination of Safe Shutdown Earthquake Ground Motion**			
			Note a	
STD COL 1.9-1	**Regulatory Guide 1.166, Rev. 0, 3/97 – Pre-Earthquake Planning and Immediate Nuclear Power Plant Operator Postearthquake Actions**			
	General		Conforms	
	Regulatory Guide 1.167, Rev. 0, 3/97 – Restart of a Nuclear Power Plant Shut Down by a Seismic Event			
	General		Conforms	
	Regulatory Guide 1.168, Rev. 1, 2/04 – Verification, Validation, Reviews, and Audits for Digital Computer Software Used in Safety Systems of Nuclear Power Plants			
	Conformance with Revision 0 of the Regulatory Guide is documented in the DCD.			
	Regulatory Guide 1.174, Rev. 1, 11/02 – An Approach for Using Probabilistic Risk Assessment in Risk-Informed Decisions on Plant-Specific Changes to the Licensing Basis			
	General		Conforms	

	Criteria Section	Referenced Criteria	FSAR Position	Clarification/ Summary Description of Exceptions
STD COL 1.9-1	**Regulatory Guide 1.175, Rev. 0, 8/98 – An Approach for Plant-Specific, Risk-Informed Decisionmaking: Inservice Testing**			
	General		Conforms	
	Regulatory Guide 1.177, Rev. 0, 8/98 – An Approach for Plant-Specific, Risk-Informed Decisionmaking: Technical Specifications			
	General		Conforms	
	Regulatory Guide 1.178, Rev. 1, 9/03 – An Approach for Plant-Specific Risk-Informed Decisionmaking for Inservice Inspection of Piping			
	General		Conforms	
	Regulatory Guide 1.179, Rev. 0, 1/99 – Standard Format and Content of License Termination Plans for Nuclear Power Reactors			
			N/A	This Regulatory Guide is outside the scope of the FSAR.
	Regulatory Guide 1.180, Rev. 1, 10/03 – Guidelines for Evaluating Electromagnetic and Radio-Frequency Interference in Safety-Related Instrumentation and Control Systems			
	Conformance with Revision 0 of the Regulatory Guide is documented in the DCD.			
	Regulatory Guide 1.181, Rev. 0, 9/99 – Content of the Updated Final Safety Analysis Report in Accordance with 10 CFR 50.71(e)			
	General		Conforms	
	Regulatory Guide 1.182, Rev. 0, 5/00 – Assessing and Managing Risk Before Maintenance Activities at Nuclear Power Plants			
	General		Conforms	
VEGP COL 1.9-1	**Regulatory Guide 1.183, Rev. 0, 7/00 – Alternative Radiological Source Terms for Evaluating Design Basis Accidents at Nuclear Power Reactors**			
			Note a	
STD COL 1.9-1	**Regulatory Guide 1.184, Rev. 0, 7/00 – Decommissioning of Nuclear Power Reactors**			
			N/A	This Regulatory Guide is outside the scope of the FSAR.
	Regulatory Guide 1.185, Rev. 0, 7/00 – Standard Format and Content for Post-shutdown Decommissioning Activities Report			

Criteria Section	Referenced Criteria	FSAR Position	Clarification/ Summary Description of Exceptions
		N/A	This Regulatory Guide is outside the scope of the FSAR.

STD COL 1.9-1

Regulatory Guide 1.186, Rev. 0, 12/00 – Guidance and Examples for Identifying 10 CFR 50.2 Design Bases

		N/A	This Regulatory Guide is outside the scope of the FSAR.

Regulatory Guide 1.187, Rev. 0, 11/00 – Guidance for Implementation of 10 CFR 50.59, Changes, Tests, and Experiments

General		Conforms	

Regulatory Guide 1.188, Rev. 1, 9/05 – Standard Format and Content for Applications To Renew Nuclear Power Plant Operating Licenses

		N/A	This Regulatory Guide is outside the scope of the FSAR.

Regulatory Guide 1.189, Rev. 1, 3/07 – Fire Protection for Nuclear Power Plants

Conformance with Revision 0 of the Regulatory Guide is documented in the DCD. Conformance of the design aspects is as stated in the DCD. Conformance with Revision 1 of this Regulatory Guide for programmatic and/or operational aspects is documented below.

General		Conforms	

Regulatory Guide 1.191, Rev. 0, 5/01 – Fire Protection Program for Nuclear Power Plants During Decommissioning and Permanent Shutdown

		N/A	This Regulatory Guide is outside the scope of the FSAR.

Regulatory Guide 1.192, Rev. 0, 6/03 – Operation and Maintenance Code Case Acceptability, ASME OM Code

General		Conforms	

Regulatory Guide 1.193, Rev. 1, 8/05– ASME Code Cases Not Approved for Use

General		Conforms	

Regulatory Guide 1.194, Rev. 0, 6/03 – Atmospheric Relative Concentrations for Control Room Radiological Habitability Assessments at Nuclear Power Plants

General		Conforms	

	Criteria Section	Referenced Criteria	FSAR Position	Clarification/ Summary Description of Exceptions
STD COL 1.9-1	**Regulatory Guide 1.195, Rev. 0, 5/03 – Methods and Assumptions for Evaluating Radiological Consequences of Design Basis Accidents at Light-Water Nuclear Power Reactors**			
	This Regulatory Guide is not applicable to the AP1000 certified design.			
	Regulatory Guide 1.196, Rev. 1, 1/07 – Control Room Habitability at Light-Water Nuclear Power Reactors			
	Conformance with Revision 1 of this Regulatory Guide for programmatic and/or operational aspects is documented below. This Regulatory Guide is not applicable to the AP1000 certified design.			
	General		Conforms	
	Regulatory Guide 1.197, Rev. 0, 5/03 – Demonstrating Control Room Envelope Integrity at Nuclear Power Reactors			
	General		Conforms	
VEGP COL 1.9-2	**Regulatory Guide 1.198, Rev. 0, 11/03 – Procedures and Criteria for Assessing Seismic Soil Liquefaction at Nuclear Power Plant Sites**			
			Note a	
STD COL 1.9-1	**Regulatory Guide 1.199, Rev. 0, 11/03 – Anchoring Components and Structural Supports in Concrete**			
			N/A	This Regulatory Guide is not applicable to the AP1000 certified design.
	Regulatory Guide 1.200, Rev. 1, 1/07 – An Approach for Determining the Technical Adequacy of Probabilistic Risk Assessment Results for Risk-Informed Activities			
	General		Conforms	
	Regulatory Guide 1.201, Rev. 1, 5/06 – Guidelines for Categorizing Structures, Systems, and Components in Nuclear Power Plants According to Their Safety Significance			
	This Regulatory Guide is not applicable to the AP1000 certified design.			
	Regulatory Guide 1.202, Rev. 0, 2/05 – Standard Format and Content of Decommissioning Cost Estimates for Nuclear Power Reactors			
	This Regulatory Guide is outside the scope of the FSAR.			
	Regulatory Guide 1.203, Rev. 0, 12/05 – Transient and Accident Analysis Methods			
	This Regulatory Guide is not applicable to the AP1000 certified design.			

	Criteria Section	Referenced Criteria	FSAR Position	Clarification/ Summary Description of Exceptions
STD COL 1.9-1	**Regulatory Guide 1.204, Rev. 0, 11/05 – Guidelines for Lightning Protection of Nuclear Power Plants**			
	General		Conforms	
	Regulatory Guide 1.205, Rev. 0, 5/06 – Risk-Informed, Performance-Based Fire Protection for Existing Light-Water Nuclear Power Plants			
	This Regulatory Guide is not applicable to the AP1000 certified design.			
	Regulatory Guide 1.206, Rev. 0, 6/07 – Combined License Applications for Nuclear Power Plants (LWR Edition)			
	General	Format	Conforms	
	General	Content	Exception	Exceptions to content are identified in Table 1.9-202.
	Regulatory Guide 1.207, Rev. 0, 3/07 – Guidelines for Evaluating Fatigue Analyses Incorporating the Life Reduction of Metal Components Due to the Effects of the Light-Water Reactor Environment for New Reactors			
	This Regulatory Guide is not applicable to the AP1000 certified design.			
	Regulatory Guide 1.208, Rev. 0, 3/07 – A Performance-Based Approach to Define the Site-Specific Earthquake Ground Motion			
			N/A	Performance-based analysis per RG 1.165 and ASCE 43-05. See note a.
	Regulatory Guide 1.209, Rev. 0, 3/07 – Guidelines for Environmental Qualification of Safety-Related Computer-Based Instrumentation and Control Systems in Nuclear Power Plants			
	This Regulatory Guide is not applicable to the AP1000 certified design.			
	DIVISION 4 — Environmental and Siting			
VEGP COL 1.9-1	**Regulatory Guide 4.2 & Supp. 1, Rev. 2, 7/76, S-1, 9/00 – Preparation of Environmental Reports for Nuclear Power Stations**			
			Note a	
	Regulatory Guide 4.7 Rev. 2, 4/98 – General Site Suitability Criteria for Nuclear Power Stations			
			Note a	

Criteria Section	Referenced Criteria	FSAR Position	Clarification/ Summary Description of Exceptions
STD COL 1.9-1	**Regulatory Guide 4.15 Rev. 2, 7/07 – Quality Assurance for Radiological Monitoring Programs (Inception through Normal Operations to License Termination) – Effluent Streams and the Environment**		
		Exception	The Guidance of Rev. 1, February 1979 will be followed.
	DIVISION 5 — Materials and Plant Protection		
	Regulatory Guide 5.9 Rev. 2, 12/83 – Guidelines for Germanium Spectroscopy Systems for Measurement of Special Nuclear Material		
		N/A	This Regulatory Guide is outside the scope of the FSAR.
	Regulatory Guide 5.12, Rev. 0, 11/73 – General Use of Locks in the Protection and Control of Facilities and Special Nuclear Materials		
	Conformance of the design aspects is as stated in the DCD.		
		N/A	This Regulatory Guide is outside the scope of the FSAR.
	Regulatory Guide 5.65, Rev. 0, 9/86 – Vital Area Access Controls, Protection of Physical Security Equipment, and Key and Lock Controls		
	Conformance of the design aspects is as stated in the DCD.		
		N/A	This Regulatory Guide is outside the scope of the FSAR.
	DIVISION 8 — Occupational Health		
	Regulatory Guide 8.2, Rev. 0, 2/73 – Guide for Administrative Practices in Radiation Monitoring		
General	10 CFR Part 20; ANSI 13.2-1969	Exception	The reference to 10 CFR 20.401 is no longer valid in the current version of 10 CFR Part 20. ANSI N13.2-1969 was reaffirmed in 1988.

	Criteria Section	Referenced Criteria	FSAR Position	Clarification/ Summary Description of Exceptions
	Regulatory Guide 8.4, Rev. 0, 2/73 - Direct-Reading and Indirect-Reading Pocket Dosimeters			
STD COL 1.9-1	General	10 CFR Part 20 ANSI N13.5-1972	Exception	The reference to 10 CFR 20.202 (a) and 20.401 is no longer valid in the current version of 10 CFR Part 20. ANSI N13.5-1972 was reaffirmed in 1989. The two performance criteria specified in Regulatory Guide 8.4 (accuracy and leakage) for these devices are met using acceptance standards in ANSI N322-1997 “American National Standard Inspection, Test, Construction, and Performance Requirements for Direct Reading Electrostatic/Electroscope Type Dosimeters”.
	Regulatory Guide 8.5, Rev. 1, 3/81 - Criticality and Other Interior Evacuation Signals			
	General		Conforms	
	Regulatory Guide 8.6, Rev. 0, 5/73 - Standard Test Procedure for Geiger-Muller Counters			
	General		Exception	Instrument calibration program is based upon criteria in ANSI N323-1978 (R1993) “Radiation Protection Instrumentation and Calibration.”
	Regulatory Guide 8.7, Rev. 2, 11/05 - Instructions for Recording and Reporting Occupational Radiation Dose Data			
	General		Conforms	

STD COL 1.9-1

Criteria Section	Referenced Criteria	FSAR Position	Clarification/ Summary Description of Exceptions
Regulatory Guide 8.8, Rev. 3, 6/78 – Information Relevant to Ensuring That Occupational Radiation Exposures at Nuclear Power Stations Will Be As Low As Is Reasonably Achievable			
Conformance of the design aspects is as stated in the DCD. Conformance with Revision 3 of this Regulatory Guide for programmatic and/or operational aspects is documented below.			
C.1		Conforms	
C.3.a		Conforms	
C.3.b		Exception	Regulatory Guide 1.16 C.1.b.(3) data is no longer reported. Reporting per C.1.b(2) is also no longer required.
C.3.c		Conforms	
C.4.b-C.4.d	ANSI Z-88.2, Regulatory Guide 8.15, NUREG-0041	Conforms	Conformance is with the latest revision of NUREG-0041.
Regulatory Guide 8.9, Rev. 1, 7/93 – Acceptable Concepts, Models, Equations, and Assumptions for a Bioassay Program			
General		Conforms	
Regulatory Guide 8.10, Rev. 1-R, 5/77 – Operating Philosophy For Maintaining Occupational Radiation Exposures as Low as is Reasonably Achievable			
General		Conforms	
Regulatory Guide 8.13, Rev. 3, 6/99 – Instruction Concerning Prenatal Radiation Exposure			
General		Conforms	
Regulatory Guide 8.15, Rev. 1, 10/99 – Acceptable Programs for Respiratory Protection			
General		Conforms	
Regulatory Guide 8.27, Rev. 0, 3/81 – Radiation Protection Training for Personnel at Light-Water-Cooled Nuclear Power Plants			
General		Conforms	

STD COL 1.9-1

Criteria Section	Referenced Criteria	FSAR Position	Clarification/ Summary Description of Exceptions
Regulatory Guide 8.28, Rev. 0, 8/81 – Audible-Alarm Dosimeters			
General	ANSI N13.7-1981	Conforms	ANSI N13.7-1981 was reaffirmed in 1992.
Regulatory Guide 8.29, Rev. 1, 2/96 – Instruction Concerning Risks from Occupational Radiation Exposure			
General		Conforms	
Regulatory Guide 8.34, Rev. 0, 7/92 – Monitoring Criteria and Methods To Calculate Occupational Radiation Doses			
General		Conforms	
Regulatory Guide 8.35, Rev. 0, 6/92 – Planned Special Exposures			
General		Conforms	
Regulatory Guide 8.36, Rev. 0, 7/92 – Radiation Dose to the Embryo/Fetus			
General		Conforms	
Regulatory Guide 8.38, Rev. 1, 5/06 – Control of Access to High and Very High Radiation Areas in Nuclear Power Plants			
Conformance of the design aspects is as stated in the DCD. Conformance with Revision 1 of this Regulatory Guide for programmatic and/or operational aspects is documented below.			
General		Conforms	

APPENDIX 1AA Note a. Refer to ESPA SSAR Tables 1-2 and 1-3.

CHAPTER 2

SITE CHARACTERISTICS

TABLE OF CONTENTS

Section	Title	Page
2.0	SITE CHARACTERISTICS	2.0-1
2.1	GEOGRAPHY AND DEMOGRAPHY	2.1-1
2.1.4	COMBINED LICENSE INFORMATION FOR GEOGRAPHY AND DEMOGRAPHY	2.1-1
2.2	NEARBY INDUSTRIAL, TRANSPORTATION, AND MILITARY FACILITIES	2.2-1
2.2.3	EVALUATION OF POTENTIAL ACCIDENTS	2.2-1
2.2.3.2	Hazardous Chemicals	2.2-1
2.2.3.2.3.1	Hydrazine Hazard from Onsite Storage Tanks	2.2-1
2.2.3.2.3.2	Other Chemical Hazards from Onsite Storage Tanks	2.2-5
2.2.3.3	Fires	2.2-5
2.2.3.3.1	Forest Fires	2.2-5
2.2.3.3.2	Fire Due to an Accident at Offsite Industrial Storage Facility	2.2-6
2.2.3.4	Radiological Hazards	2.2-7
2.2.4	COMBINED LICENSE INFORMATION FOR IDENTIFICATION OF SITE-SPECIFIC POTENTIAL HAZARDS	2.2-8
2.3	METEOROLOGY	2.3-1
2.3.1.3.4	Precipitation Extremes	2.3-1
2.3.3.4	VEGP Meteorological Monitoring Program Compliance	2.3-2
2.3.4	SHORT-TERM DIFFUSION ESTIMATES	2.3-2
2.3.4.3	Radiological Accident Dispersion Estimates at the Control Room	2.3-3
2.3.4.3.1	Regulatory Basis and Technical Approach	2.3-4
2.3.4.3.2	ARCON96 Modeling Results	2.3-7
2.3.4.4	Dispersion Estimates Associated with Accidental Onsite and Offsite Hazardous Material Releases	2.3-7
2.3.5	LONG-TERM DIFFUSION ESTIMATES	2.3-8
2.3.6	COMBINED LICENSE INFORMATION	2.3-8
2.3.6.1	Regional Climatology	2.3-8
2.3.6.2	Local Meteorology	2.3-8
2.3.6.3	Onsite Meteorological Measurements Program	2.3-9
2.3.6.4	Short-Term Diffusion Estimates	2.3-9
2.3.6.5	Long Term Diffusion Estimates	2.3-9
2.3.7	REFERENCES	2.3-9

Section	Title	Page
2.4	HYDROLOGIC ENGINEERING	2.4-1
2.4.2	FLOODS	2.4-1
2.4.2.3	Effects of Local Intense Precipitation	2.4-1
2.4.10	FLOODING PROTECTION REQUIREMENTS	2.4-5
2.4.14	TECHNICAL SPECIFICATIONS AND EMERGENCY OPERATION REQUIREMENTS	2.4-6
2.4.15	COMBINED LICENSE INFORMATION	2.4-6
2.4.15.1	Hydrological Description	2.4-6
2.4.15.2	Floods	2.4-6
2.4.15.3	Cooling Water Supply	2.4-6
2.4.15.4	Groundwater	2.4-7
2.4.15.5	Accidental Release of Liquid Effluents into Ground and Surface Water	2.4-7
2.4.15.6	Emergency Operation Requirement	2.4-7
2.4.16	REFERENCES	2.4-7
2.5	GEOLOGY, SEISMOLOGY, AND GEOTECHNICAL ENGINEERING	2.5-1
2.5.7	COMBINED LICENSE INFORMATION	2.5-1
2.5.7.1	Basic Geologic and Seismic Information	2.5-1
2.5.7.2	Site Seismic and Tectonic Characteristics Information	2.5-1
2.5.7.3	Geoscience Parameters	2.5-1
2.5.7.4	Surface Faulting	2.5-1
2.5.7.5	Site and Structures	2.5-1
2.5.7.6	Properties of Underlying Materials	2.5-2
2.5.7.7	Excavation and Backfill	2.5-2
2.5.7.8	Groundwater Conditions	2.5-2
2.5.7.9	Liquefaction Potential	2.5-2
2.5.7.10	Bearing Capacity	2.5-2
2.5.7.11	Earth Pressures	2.5-2
2.5.7.12	Static and Dynamic Stability of Facilities	2.5-2
2.5.7.13	Subsurface Instrumentation	2.5-2
2.5.7.14	Stability of Slopes	2.5-3
2.5.7.15	Embankments and Dams	2.5-3
2.5.7.16	Settlement of Nuclear Island	2.5-3

LIST OF TABLES

Number	Title
2.0-201	Comparison of AP1000 DCD Site Parameters and Vogtle Electric Generating Plant Units 3 & 4 Site Characteristics
2.0-202	Comparison of Control Room Atmospheric Dispersion Factors for Accident Analysis for AP1000 DCD and VEGP Units 3 & 4
2.2-201	AP1000 (VEGP Units 3 and 4) Onsite Chemicals
2.3-201	ARCON96 X/Q Values at the Control Room HVAC Intake
2.3-202	ARCON96 X/Q Values at the Annex Building Access Door
2.4-201	Rainfall Depths Used as Input for Frequency Storm HEC-HMS Module
2.4-202	Subbasin Parameters for Entry in Unit 3 & 4 Drainage System HEC-HMS Model
2.4-203	Routing Parameters for Reaches in South-Side Drainage System Model
2.4-204	Summary Results of HEC-HMS Model of Unit 3 & 4 PMP Drainage System (Sheet 1 of 2)
2.4-204	Summary Results of HEC-HMS Model of Unit 3 & 4 PMP Drainage System (Sheet 2 of 2)
2.4-205	Location of Main Channel Discharge Points in HEC-RAS Model
2.4-206	Location of Main Channel Discharge Points in HEC-RAS Model
2.4-207	Summary of HEC-RAS output for PMP Profile (Sheet 1 of 3)
2.4-207	Summary of HEC-RAS output for PMP Profile (Sheet 2 of 3)
2.4-207	Summary of HEC-RAS output for PMP Profile (Sheet 3 of 3)

LIST OF FIGURES

Number	Title
2.4-201	Site Plan with PMP Drainage Boundaries and Flow Paths
2.4-202	PMP Hyetograph Determined in Frequency Storm Module of HEC-HMS
2.4-203	HEC-HMS PMP Runoff Hydrographs at Points along Main Ditch

CHAPTER 2

SITE CHARACTERISTICS

The introductory information at the beginning of Chapter 2 of the referenced DCD is incorporated by reference with the following departures and/or supplements.

ESPA SSAR Section 1.3 is incorporated by reference with no variances or supplements.

Insert the following subsection at the end of the introductory text of DCD Chapter 2, prior to DCD Section 2.1.

2.0 SITE CHARACTERISTICS

VEGP SUP 2.0-1 Chapter 2 describes the characteristics and site-related design parameters of the Vogtle Electric Generating Plant (VEGP), Units 3 and 4. The site location, characteristics and parameters, as described in the following five sections are provided in sufficient detail to support a safety assessment:

- Geography and Demography (Section 2.1)
- Nearby industrial, Transportation, and Military Facilities (Section 2.2)
- Meteorology (Section 2.3)
- Hydrologic Engineering (Section 2.4)
- Geology, Seismology, and Geotechnical Engineering (Section 2.5)

Table 2.0-201 provides a comparison of site-related design parameters for which the AP1000 plant is designed and site characteristics specific to VEGP in support of this safety assessment. The first two columns of Table 2.0-201 are a compilation of the site parameters from DCD Table 2-1 and DCD Tier 1 Table 5.0-1. The third column of Table 2.0-201 is the corresponding site characteristic for the VEGP. The fourth column denotes the place where this data is presented. The last column indicates whether or not the site characteristic falls within the AP1000 site parameters. “Yes” indicates the site characteristic falls within the parameter. Control room atmospheric dispersion factors (χ/Q) for accident dose analysis are presented in Table 2.0-202. All of the control room χ/Q values fall within the AP1000 parameters.

VEGP SUP 2.0-1

Table 2.0-201 (Sheet 1 of 7)
Comparison of AP1000 DCD Site Parameters and Vogtle Electric Generating Plant Units 3 & 4 Site Characteristics

	AP1000 DCD Site Parameter[a]	VEGP Site Characteristic	VEGP Reference	VEGP Within Site Parameter
Air Temperature				
Maximum Safety[b]	115°F dry bulb/80°F coincident wet bulb	115°F dry bulb/77.7°F coincident wet bulb	ESPA SSAR Table 1-1	Yes
	85.5°F wet bulb (noncoincident)	83.9°F wet bulb (noncoincident)	ESPA SSAR Table 1-1	Yes
Minimum Safety[b]	-40°F	-8°F	ESPA SSAR Table 1-1	Yes
Maximum Normal[c]	100°F dry bulb/80.1°F coincident wet bulb	94°F dry bulb/78°F coincident wet bulb	ESPA SSAR Table 1-1	Yes
	80.1°F wet bulb (noncoincident)[d]	78°F wet bulb (noncoincident)	ESPA SSAR Table 1-1	Yes
Minimum Normal[c]	-10°F	-8°F	ESPA SSAR Table 1-1	Yes
Wind Speed				
Operating Basis	145 mph (3 second gust); importance factor 1.15 (safety), 1.0 (nonsafety); exposure C; topographic factor 1.0	104 mph (3 second gust); exposure C; topographic factor 1.0. (Importance factor is not a property of the wind speed.)	ESPA SSAR Table 1-1	Yes
Tornado	300 mph	300 mph	ESPA SSAR Table 1-1	Yes
	Maximum pressure differential of 2.0 lb/in^2	2.0 lb/in^2	ESPA SSAR Table 1-1	Yes

VEGP SUP 2.0-1

Table 2.0-201 (Sheet 2 of 7)
Comparison of AP1000 DCD Site Parameters and Vogtle Electric Generating Plant Units 3 & 4 Site Characteristics

	AP1000 DCD Site Parameter[a]	VEGP Site Characteristic	VEGP Reference	VEGP Within Site Parameter
Seismic				
SSE	SSE free field peak ground acceleration of 0.30 g with modified Regulatory Guide 1.60 response spectra (See Figures 5.0-1 and 5.0-2.). Seismic input is defined at finished grade except for sites where the nuclear island is founded on hard rock. If the site-specific spectra exceed the response spectra in Figures 5.0-1 and 5.0-2 at any frequency, or if soil conditions are outside the range evaluated for AP1000 design certification, a site-specific evaluation can be performed. This evaluation will consist of a site-specific dynamic analysis and generation of in-structure response spectra at key locations to be compared with the floor response spectra of the certified design at 5-percent damping. The site is acceptable if the floor response spectra from the site-specific evaluation do not exceed the AP1000 spectra for each of the locations or the exceedances are justified. The hard rock high frequency (HRHF) ground motion spectra (GMRS) are shown in Figure 5.0-3 and Figure 5.0-4 defined at the foundation level for 5% damping. The HRHF GMRS provide an alternative set of spectra for evaluation of site specific GMRS. A site is acceptable if its site specific GMRS fall within the AP1000 HRHF GMRS.	Site-specific GMRS values specified and illustrated in ESPA SSAR Section 2.5.2. The seismic design of AP-1000 nuclear island is discussed in Section 3.7.1.1.1. Site-specific evaluation performed in ESPA SSAR Appendix 2.5E	ESPA SSAR Table 1-1 FSAR 3.7.1.1.1 ESPA SSAR Appendix 2.5E	Yes

VEGP SUP 2.0-1

Table 2.0-201 (Sheet 3 of 7)
Comparison of AP1000 DCD Site Parameters and Vogtle Electric Generating Plant Units 3 & 4 Site Characteristics

	AP1000 DCD Site Parameter[a]	VEGP Site Characteristic	VEGP Reference	VEGP Within Site Parameter
Fault Displacement Potential	Negligible	No fault displacement potential within the investigative area.	ESPA SSAR Table 1-1	Yes
Soil				
Average Allowable Static Bearing Capacity	Greater than or equal to 8,600 lb/ft² over the footprint of the nuclear island at its excavation depth	34,000 lb ft^2	ESPA SSAR Table 1-1	Yes
Maximum Allowable Dynamic Bearing Capacity for Normal Plus Safe Shutdown Earthquake (SSE)	Greater than or equal to 35,000 lb/ft² at the edge of the nuclear island at its excavation depth	42,000 lb/ft^2	ESPA SSAR Table 1-1	Yes
Shear Wave Velocity	Greater than or equal to 1,000 ft/sec based on low-strain best-estimate soil properties over the footprint of the nuclear island at its excavation depth	Greater than 1000 ft/sec	ESPA SSAR Table 1-1	Yes
Lateral Variability	Soils supporting the nuclear island should not have extreme variations in subgrade stiffness. This may demonstrated by one of the following:			
	1 Soils supporting the nuclear island are uniform in accordance with Regulatory Guide 1.132 if the geologic and stratigraphic features at depths less than 120 feet below grade can be correlated from one boring or sounding location to the next with relatively smooth variations in thickness or properties of the geologic units, or	Site is uniform based on boring data and placement of engineered backfill	ESPA SSAR 2.5.4.4 and 2.5.4.5	Yes

VEGP SUP 2.0-1

Table 2.0-201 (Sheet 4 of 7)
Comparison of AP1000 DCD Site Parameters and Vogtle Electric Generating Plant Units 3 & 4 Site Characteristics

		AP1000 DCD Site Parameter[a]	VEGP Site Characteristic	VEGP Reference	VEGP Within Site Parameter
Lateral Variability (Continued)	2	Site specific assessment of subsurface conditions demonstrates that the bearing pressures below the footprint of the nuclear island do not exceed 120% of those from the generic analyses of the nuclear island at a uniform site, or	N/A		
	3	Site specific analysis of the nuclear island basemat demonstrates that the site specific demand is within the capacity of the basemat.	N/A		
		As an example of sites that are considered uniform, the variation of shear wave velocity in the material below the foundation to a depth of 120 feet below finished grade within the nuclear island footprint meets the criteria in the case outlined below:			
		Case 1: For a layer with a low strain shear wave velocity greater than or equal to 2500 feet per second, the layer should have approximately uniform thickness, should have a dip not greater than 20 degrees, and should have less than 20 percent variation in the shear wave velocity from the average velocity than any layer.	N/A		

VEGP SUP 2.0-1

Table 2.0-201 (Sheet 5 of 7)
Comparison of AP1000 DCD Site Parameters and Vogtle Electric Generating Plant Units 3 & 4 Site Characteristics

	AP1000 DCD Site Parameter[a]	VEGP Site Characteristic	VEGP Reference	VEGP Within Site Parameter
Liquefaction Potential	Negligible.	None.	ESPA SSAR Table 1-1	Yes
Minimum Soil Angle of Internal Friction	Greater than or equal to 35 degrees below footprint of nuclear island at its excavation depth.	36 degrees	ESPA SSAR Table 1-1	Yes
Missiles				
Tornado	4000-lb automobile at 105 mph horizontal, 74 mph vertical 275-lb, 8-in. shell at 105 mph horizontal, 74 mph vertical 1-inch-diameter steel ball at 105 mph in the most damaging direction	4000-lb automobile at 105 mph horizontal, 74 mph vertical 275-lb, 8-in. shell at 105 mph horizontal, 74 mph vertical 1-inch-diameter steel ball at 105 mph in the most damaging direction	Subsection 3.5.1.5 DCD Section 3.5.1.4 APP-GW-GLR-020, "Wind and Tornado Site Interface Criteria," Westinghouse Electric Company LLC.[e]	Yes
Flood Level	Less than plant elevation 100 feet	The design basis river flood level is El. 178.10 ft MSL, which is 41.9 feet below plant elevation (220 ft MSL). Maximum local PMP flood elevation is 219.45 ft MSL, which is 0.55 feet below plant elevation (220 ft MSL).	ESPA SSAR Table 1-1 Subsection 2.4.2	Yes
Ground Water Level	Less than plant elevation 98 feet	The maximum groundwater level is 165 ft MSL which is 55 feet below plant elevation (220 ft MSL).	ESPA SSAR Table 1-1	Yes

VEGP SUP 2.0-1

Table 2.0-201 (Sheet 6 of 7)
Comparison of AP1000 DCD Site Parameters and Vogtle Electric Generating Plant Units 3 & 4 Site Characteristics

	AP1000 DCD Site Parameter[a]	VEGP Site Characteristic	VEGP Reference	VEGP Within Site Parameter
Plant Grade Elevation	Less than plant elevation 100 feet, except for portion at a higher elevation adjacent to the annex building	The standard plant-floor elevation of the safety-related facilities is established at plant elevation 220 ft MSL; the finished plant grade elevation slopes away from plant structures	Figure 2.4-201	Yes
Precipitation				
Rain	19.4 in/hr (6.3 in/5 min)	19.2 in/hr (6.2 in/5 min)	ESPA SSAR Table 1-1	Yes
Snow/Ice	75 pounds per square foot on ground with exposure factor of 1.0 and importance factors of 1.2 (safety) and 1.0 (non-safety)	10.0 pounds per square foot	ESPA SSAR Table 1-1	Yes
Atmospheric Dispersion Values - χ/Q[f]				
Site Boundary (annual average)	$\leq 2.0 \times 10^{-5}$ sec/m^3	0.55×10^{-5} sec/m^3	ESPA SSAR Table 1-1	Yes
Site Boundary (0-2 hr)	$\leq 1.0 \times 10^{-3}$ sec/m^3 [g]	3.49×10^{-4} sec/m^3	ESPA SSAR Table 1-1	Yes
Low population zone boundary[g]				
0–8 hr	$\leq 5.0 \times 10^{-4}$ sec/m^3	7.04×10^{-5} sec/m^3	ESPA SSAR Table 1-1	Yes
8–24 hr	$\leq 3.0 \times 10^{-4}$ sec/m^3	5.25×10^{-5}sec/m^3	ESPA SSAR Table 1-1	Yes
24–96 hr	$\leq 1.5 \times 10^{-4}$ sec/m^3	2.77×10^{-5} sec/m^3	ESPA SSAR Table 1-1	Yes
96–720 hr	$\leq 8.0 \times 10^{-5}$ sec/m^3	1.11×10^{-5} sec/m^3	ESPA SSAR Table 1-1	Yes
Control Room	Table 2.0-202	Table 2.0-202	Table 2.0-202	Yes

VEGP SUP 2.0-1

Table 2.0-201 (Sheet 7 of 7)
Comparison of AP1000 DCD Site Parameters and Vogtle Electric Generating Plant Units 3 & 4 Site Characteristics

	AP1000 DCD Site Parameter[a]	VEGP Site Characteristic	VEGP Reference	VEGP Within Site Parameter
Population Distribution[g]				
Exclusion area (site)	0.5 mi.	The minimum distance from the effluent release boundary to the exclusion area boundary is 0.50 mile.[f]	ESPA SSAR Table 1-1	Yes

a) AP1000 DCD Site Parameters are a compilation of DCD Tier 1 Table 5.0-1 and DCD Tier 2 Table 2-1.
b) Maximum and minimum safety values are based on historical data and exclude peaks of less than 2 hours duration.
c) Maximum and minimum normal values are the 1 percent exceedance magnitudes.
d) The noncoincident wet bulb temperature is applicable to the cooling tower only.
e) Per APP-GW-GLR-020, the kinetic energies of the missiles discussed in DCD Section 3.5 are greater than the kinetic energies of the missiles discussed in Regulatory Guide 1.76 and result in a more conservative design.
f) For AP1000, the term “site boundary” and “exclusion area boundary” are used interchangeably. Thus, the χ/Q specified for the site boundary applies whenever a discussion refers to the exclusion area boundary. At VEGP the “site boundary” and ”exclusion area boundary” are not interchangeable. See Figure 1.1-202.
g) Site Interface Values for Post-Accident Dose Consequences and Minimum Distance to Site Boundary are reported per ESPA SSAR Section 1.3 and Table 1-1. Cooling Tower Make-up Flow Rate, which is not an AP1000 DCD Site Parameter, is 61,145 gpm (2 units) per ESPA SSAR Table 1-1.

VEGP SUP 2.0-1

Table 2.0-202
Comparison of Control Room Atmospheric Dispersion Factors for Accident Analysis for AP1000 DCD and VEGP Units 3 & 4 (Sheet 1 of 2)

X/Q (sec/m^3) at HVAC Intake for the Identified Release Points[a]

	Plant Vent or PCS Air Diffuser[b]	Plant Vent	PCS Air Diffuser	**Ground Level Containment Release Points[c]**	Ground Level Containment Release Points	**PORV and Safety Valve Releases[d]**	PORV and Safety Valve Releases	**Condenser Air Removal Stack[g]**	Condenser Air Removal Stack	**Steam Line Break Releases**	Steam Vent	**Fuel Handling Area[e]**	Fuel Handling Area Blowout Panel	Fuel Handling Area Truck Bay Door
Release Time	**DCD**	VEGP	VEGP	**DCD**	VEGP	**DCD**	VEGP	**DCD**	VEGP	**DCD**	VEGP	**DCD**	VEGP	VEGP
0 – 2 hours	**3.0E-3**	2.02E-03	1.68E-03	**6.0E-3**	3.20E-03	**2.0E-2**	1.31E-02	**6.0E-3**	1.54E-03	**2.4E-2**	1.48E-02	**6.0E-3**	1.54E-03	1.15E-03
2 – 8 hours	**2.5E-3**	1.58E-03	1.29E-03	**4.5E-3**	1.82E-03	**1.8E-2**	1.02E-02	**4.0E-3**	1.17E-03	**2.0E-2**	1.20E-02	**4.0E-3**	1.11E-03	8.29E-04
8 – 24 hours	**1.0E-3**	6.37E-04	5.47E-04	**2.0E-3**	8.27E-04	**7.0E-3**	4.62E-03	**2.0E-3**	5.36E-04	**7.5E-3**	5.41E-03	**2.0E-3**	4.42E-04	3.35E-04
1 – 4 days	**8.0E-4**	5.12E-04	4.55E-04	**1.8E-3**	7.22E-04	**5.0E-3**	3.29E-03	**1.5E-3**	3.94E-04	**5.5E-3**	3.93E-03	**1.5E-3**	3.57E-04	2.62E-04
4 – 30 days	**6.0E-4**	3.82E-04	3.34E-04	**1.5E-3**	5.70E-04	**4.5E-3**	2.77E-03	**1.0E-3**	2.78E-04	**5.0E-3**	3.26E-03	**1.0E-3**	2.59E-04	1.86E-04

X/Q (sec/m^3) at Control Room Door for the Identified Release Points[f]

	Plant Vent or PCS Air Diffuser[b]	Plant Vent	PCS Air Diffuser	**Ground Level Containment Release Points[c]**	Ground Level Containment Release Points	**PORV and Safety Valve Releases[d]**	PORV and Safety Valve Releases	**Condenser Air Removal Stack[g]**	Condenser Air Removal Stack	**Steam Line Break Releases**	Steam Vent	**Fuel Handling Area[e]**	Fuel Handling Area Blowout Panel	Fuel Handling Area Truck Bay Door
Release Time	**DCD**	VEGP	VEGP	**DCD**	VEGP	**DCD**	VEGP	**DCD**	VEGP	**DCD**	VEGP	**DCD**	VEGP	VEGP
0 – 2 hours	**1.0E-3**	4.32E-04	4.48E-04	**1.0E-3**	3.93E-04	**4.0E-3**	9.81E-04	**2.0E-2**	4.00E-03	**4.0E-3**	9.23E-04	**6.0E-3**	3.77E-04	3.48E-04
2 – 8 hours	**7.5E-4**	3.52E-04	3.38E-04	**7.5E-4**	3.16E-04	**3.2E-3**	7.69E-04	**1.8E-2**	3.15E-03	**3.2E-3**	7.31E-04	**4.0E-3**	2.84E-04	2.60E-04
8 – 24 hours	**3.5E-4**	1.44E-04	1.44E-04	**3.5E-4**	1.32E-04	**1.2E-3**	3.12E-04	**7.0E-3**	1.35E-03	**1.2E-3**	2.98E-04	**2.0E-3**	1.18E-04	1.09E-04
1 – 4 days	**2.8E-4**	1.15E-04	1.17E-04	**2.8E-4**	1.07E-04	**1.0E-3**	2.49E-04	**5.0E-3**	1.04E-03	**1.0E-3**	2.37E-04	**1.5E-3**	9.50E-05	8.75E-05
4 – 30 days	**2.5E-4**	8.47E-05	8.77E-05	**2.5E-4**	8.14E-05	**8.0E-4**	1.87E-04	**4.5E-3**	8.05E-04	**8.0E-4**	1.75E-04	**1.0E-3**	6.83E-05	6.16E-05

VEGP SUP 2.0-1

Table 2.0-202
Comparison of Control Room Atmospheric Dispersion Factors for Accident Analysis for AP1000 DCD and VEGP Units 3 & 4 (Sheet 2 of 2)

a. These dispersion factors are to be used 1) for the time period preceding the isolation of the main control room and actuation of the emergency habitability system, 2) for the time after 72 hours when the compressed air supply in the emergency habitability system would be exhausted and outside air would be drawn into the main control room, and 3) for the determination of control room doses when the non-safety ventilation system is assumed to remain operable such that the emergency habitability system is not actuated.

b. These dispersion factors are used for analysis of the doses due to a postulated small line break outside of containment. The plant vent and PCS air diffuser are potential release paths for other postulated events (loss of-coolant accident, rod ejection accident, and fuel handling accident inside the containment); however, the values are bounded by the dispersion factors for ground level releases.

c. The listed values represent modeling the containment shell as a diffuse area source, and are used for evaluating the doses in the main control room for a loss-of-coolant accident, for the containment leakage of activity following a rod ejection accident, and for a fuel handling accident occurring inside the containment.

d. The listed values bound the dispersion factors for releases from the steam line safety & power-operated relief valves. These dispersion factors would be used for evaluating the doses in the main control room for a steam generator tube rupture, a main steam line break, a locked reactor coolant pump rotor, and for the secondary side release from a rod ejection accident.

e. The listed values bound the dispersion factors for releases from the fuel storage and handling area. The listed values also bound the dispersion factors for releases from the fuel storage area in the event that spent fuel boiling occurs and the fuel handling area relief panel opens on high temperature. These dispersion factors are used for the fuel handling accident occurring outside containment and for evaluating the impact of releases associated with spent fuel pool boiling.

f. These dispersion factors are to be used when the emergency habitability system is in operation and the only path for outside air to enter the main control room is that due to ingress/egress.

g. This release point is included for information only as a potential activity release point. None of the design basis accident radiological consequences analyses model release from this point.

2.1 GEOGRAPHY AND DEMOGRAPHY

This section of the referenced DCD is incorporated by reference with the following departures and/or supplements.

This section of the referenced ESPA SSAR is incorporated by reference with no variances or supplements.

VEGP DEP 1.1-1 Subsection 2.1.1 of the DCD is renumbered as Subsection 2.1.4 and moved to the end of Section 2.1. This is being done to accommodate the incorporation of Regulatory Guide 1.206 numbering conventions for Section 2.1.

VEGP DEP 1.1-1

2.1.4 COMBINED LICENSE INFORMATION FOR GEOGRAPHY AND DEMOGRAPHY

VEGP COL 2.1-1 This COL item is addressed in Subsections 1.1.1 and 1.2.2 and in ESPA SSAR Section 2.1.

2.2 NEARBY INDUSTRIAL, TRANSPORTATION, AND MILITARY FACILITIES

This section of the referenced DCD is incorporated by reference with the following departure(s) and/or supplement(s).

This section of the referenced ESPA SSAR is incorporated by reference with the following variances and/or supplements.

VEGP DEP 1.1-1

Subsection 2.2.1 of the DCD is renumbered as Subsection 2.2.4 and moved to the end of Section 2.2. This is being done to accommodate the incorporation of Regulatory Guide 1.206 numbering conventions for Section 2.2.

2.2.3 EVALUATION OF POTENTIAL ACCIDENTS

2.2.3.2 Hazardous Chemicals

Add the following after the first paragraph in ESPA SSAR Section 2.2.3.2.3.

The impact on the new Units 3 and 4 due to an accidental hydrazine release is evaluated in Subsection 2.2.3.2.3.1 below.

VEGP COL 2.2-1
VEGP COL 6.4-1

2.2.3.2.3.1 Hydrazine Hazard from Onsite Storage Tanks

VEGP ESP COL 2.2-1

Impact on control room habitability for Units 3 and 4 due to accidental release of hydrazine was not previously evaluated in the ESPA SSAR, but is evaluated below. Hydrazine is listed in ESPA SSAR Table 2.2-5 as a chemical used for Units 1 and 2.

The Areal Locations of Hazardous Atmospheres (ALOHA) code (Reference 202) and the TNT equivalency method is used to determine the minimum safe distances for hydrazine that is stored onsite at VEGP. These minimum safe distances for Unit 3 control room are then compared to the distances from where hydrazine is stored to Unit 3. Since the Unit 4 control room is further west of Unit 3, the evaluation is based on Unit 3 only and then the results are applied to Unit 4. The four scenarios evaluated are: toxicity of a vapor cloud, flammability of a vapor cloud, explosive vapor cloud, and a tank explosion. The conservative assumptions for vapor cloud scenarios used include the following:

- It is assumed that 35% Hydrazine is pure hydrazine.

- It is assumed that the atmospheric air flow is turbulent in only one direction (no cross flow) such that the released gases spread downstream in a Gaussian manner.

- It is assumed that the total quantity of hydrazine is released and forms an evaporating puddle with a depth of 1 cm (NUREG-0570). This provides a significant surface area to maximize evaporation and the formation of a vapor cloud.

- It is assumed that the ambient temperature is 25°C, the relative humidity is 50%, and the atmospheric pressure is 1 atmosphere (40 CFR 68.22).

- The meteorological conditions are assumed to be F (stable) stability class and a wind speed of 1 m/s. F stability represents the worst 5% of meteorological conditions observed at a majority of nuclear plant sites (RG 1.78). Typically, wind speeds of about 1 m/s represent the worst 5% (Reference 201). This is a bounding assumption.

- The ground roughness was assumed to be that for "Open Country" which is equivalent to rural topography (40 CFR 68.22).

- The cloud cover was assumed to be 50%. This is the default value for ALOHA.

- The time of accidental release was assumed to be 12:00 pm on July 1, 2007. This day and time were chosen because temperatures are highest in the summer during midday. Higher temperatures lead to a higher evaporation rate and thus, a larger vapor cloud. With this time it is necessary to override the stability class to ensure that F stability is achieved. Otherwise a less stable condition is used and the cloud will disperse more.

- The wind input height was assumed to be 10 meters. ALOHA calculates a wind profile based on where the meteorological data is taken. ALOHA assumes that the MET station is at a height of 10 meters. The National Weather Service usually reports wind speeds from the height of 10 meters.

- It is assumed that there will be no temperature inversion.

- It is not known how long after a release ignition occurs for vapor cloud explosions. Therefore, the "unknown" time of vapor cloud ignition option was selected for this case. ALOHA will run explosion scenarios for a range of ignition times that encompass all of the possible ignition times for a scenario. ALOHA takes the results from all of these scenarios and combines them on a single Threat Zone plot.

- The type of vapor cloud ignition is assumed to be "ignited by detonation." This is the worst case scenario for an accidental explosion.

The conservative assumptions for tank explosion (TNT mass equivalency) scenario used include the following:

- It is assumed that 35% Hydrazine is pure hydrazine. This is conservative since hydrazine makes up only a portion of the total quantity.
- The air temperature is assumed to be 25°C which corresponds to an air density of 0.074 lb/ft^3.
- It is assumed that a detonation occurs for each tank analyzed.
- All vapor explosions are treated as if they are completely confined. Thus, a yield factor of 100% is used for all confined vapor explosions (NUREG-1805).

Toxicity of a Hydrazine Vapor Cloud

For assessing the toxicity of a vapor cloud from hydrazine release, it is necessary to determine the maximum distance at which the Immediately Dangerous to Life or Health (IDLH) value exists (RG 1.78). This distance represents the minimum safe distance from the hydrazine storage area that a nuclear power plant can operate. The distance depends on the prevailing meteorological conditions, wind speed, relative humidity, atmospheric pressure, ambient temperature, toxicity and the quantity of hydrazine released. It is also necessary to determine the resulting concentration of hydrazine inside the control room to ascertain the effects of a toxic vapor on the operators. ALOHA calculated both the inside and outside concentrations of the control room over time (0 to 1 hour). For this evaluation, a release of 6,644 gallons of hydrazine is assumed.

The hydrazine tank is located east of the Unit 1 Turbine Building, 2,200 feet from the Unit 3 control room. The evaluation considers a control room air exchange rate of 0.391 exchanges per hour, and an IDLH for hydrazine of 50 ppm. Using the same meteorological assumptions, the maximum concentration of hydrazine inside the control room is calculated to be 9.5 ppm. The resulting hydrazine concentrations inside the Units 3 and 4 control rooms are within the IDLH limit value of 50 ppm.

Results indicate that operators in the Units 3 and 4 control rooms are not impacted by the potential toxicity from a hydrazine vapor cloud.

Flammability of a Hydrazine Vapor Cloud

For assessing the flammability of a vapor cloud from a hydrazine release, the ALOHA air dispersion model was used to determine the distances where the vapor cloud may exist between the upper flammability limit (UFL) and lower flammability limit (LFL) (40 CFR 68.22). Once the concentration of the hydrazine vapor cloud is above the UFL or below the LFL, the vapor is no longer flammable.

For this evaluation, a release of 6,644 gallons of hydrazine is analyzed for potential flammable hydrazine vapor threats.

Hydrazine has an LFL of 4.7% and a UFL of 99.9%. Using the same meteorological assumptions as mentioned above, the distance from the leak source to the UFL calculated is 93 feet and to the LFL is 102 feet.

The distance from the hydrazine storage tanks to where the hydrazine vapor cloud exists between the UFL and the LFL is less than the distance from the storage tanks to the Units 3 and 4 control rooms. Therefore, results indicate that there is no potential flammable, hydrazine vapor cloud reaching the operators in the Units 3 and 4 control rooms.

Explosive Hydrazine Vapor Cloud

For assessing the explosion from a vapor cloud due to hydrazine release, it is necessary to determine the “safe distance”, the minimum distance required for an explosion to have less than or equal to 1 psi peak incident pressure (RG 1.91). This is the minimum safe distance for no impacts from an explosion of a hydrazine vapor cloud. A peak overpressure of 1 psi will shatter glass but not significantly cause structural damage to buildings (RG 1.91). The peak overpressure to the Unit 3 control room is also established. For this evaluation, a release of 6,644 gallons of hydrazine is analyzed for potential explosive vapor threats.

Using the same meteorological conditions as mentioned above, the ALOHA analysis indicates that the vapor cloud does not reach the LFL and therefore does not explode. Since there is no explosion, the operators working in the Units 3 and 4 control rooms are not impacted.

Hazard from a Tank Explosion

The methodology presented below is for a confined explosion occurring within some form of a storage container (i.e. tank). Since only vapor will burn or explode, the methodology employed considers the maximum vapor within the hydrazine storage tank as explosive (equivalent TNT). For atmospheric liquid storage, this maximum vapor would involve the container to be completely empty of liquid and filled only with air and chemical vapor at UFL conditions (NUREG-1805). Due to complete confinement and the use of only the UFL vapor mass, a 100% yield factor is attributed to the explosion (NUREG-1805). The equivalent mass of TNT is calculated by taking into account the product of the vapor mass (within the flammable range), heat of combustion, and the explosion yield factor. Once the equivalent mass of TNT is calculated, a radial distance generating a 1 psi peak incident pressure (“safe distance”) is calculated by taking the product of the factor 45 and the cube root of the equivalent mass of TNT (RG 1.91).

The evaluation is based on a 6,644 gallon hydrazine release. For the assumed atmospheric conditions, hydrazine vapor pressure of 0.2784 psi, heat of combustion of 8,345 Btu/lb, and a vapor specific gravity of 1.1, the equivalent

mass of TNT is calculated to be 302 pounds and the resulting “safe distance” is 302 feet.

Results from the TNT equivalency method indicate that there are no potential explosive, vapor threats from hydrazine storage tanks to operators in the Units 3 and 4 control rooms.

Insert the following subsection heading before the third paragraph of ESPA SSAR Subsection 2.2.3.2.3.

VEGP COL 2.2-1
VEGP COL 6.4-1
VEGP ESP COL 2.2-2

2.2.3.2.3.2 Other Chemical Hazards from Onsite Storage Tanks

Insert the following new paragraph as the last paragraph of new Subsection 2.2.3.2.3.2.

Table 2.2-201 provides specific information about the chemicals described in ESPA SSAR Table 2.2-6. This includes chemical names or limiting types and quantities. Except as noted, these chemicals have been suggested by Westinghouse for use in the AP1000 and have been evaluated in conjunction with AP1000 standard design and found not to present a hazard to the control room operators or to safety-related systems, structures, or components. In some instances, alternative chemicals to those proposed by Westinghouse have been suggested for use in the Turbine Island Chemical Feed System. These chemicals are comparable in function to those proposed by Westinghouse and are the same as those already in use for similar applications in VEGP Units 1 and 2. These chemicals also have been evaluated and found not to present a hazard to the control room operators or to safety-related systems, structures, or components. Therefore, no further analysis is required.

2.2.3.3 Fires

Add the following after the last paragraph in ESPA SSAR Subsection 2.2.3.3.

VEGP COL 2.2-1
VEGP COL 6.4-1

The specific application to Units 3 and 4 of these forest and industrial fire evaluations is further described below.

2.2.3.3.1 Forest Fires

The surrounding plant terrain is characterized by gently rolling hills and is approximately 30-percent farmland, with the remainder primarily wooded areas.

The nearest forest to the Units 1 and 2 control room is the Sandhill-Upland hardwood pine forest with an assumed total area of approximately 3,169 acres and an assumed distance of 1,836 feet away. Based on historical data on forest fires from the state of Georgia, the average size of a forest fire typically is approximately 11.4 acres. The rate of spread is conservatively assumed to be 8 feet per minute with a duration of 4 hours.

The toxic chemicals emitted from a forest fire are CO, NO_2, and CH_4. The emission concentrations in the control room air intake were calculated using the infinite line source diffusion equation with the wind direction perpendicular to the line source and blowing directly toward the control room intake, and the Briggs plume rise equation, which accounts for the buoyancy effect from the heat of the fire. For Units 1 and 2, calculations were performed to demonstrate that the pollutant concentrations outside the control room air intake for a variety of wind speeds (from 0.25 to 10 m/sec) and the Pasquill stability category G are effectively zero. Therefore, the release of toxic combustion products from the onsite forest fire did not pose a hazard to the Units 1 and 2 control room operators.

Using the methodology described in NUREG/CR-1748, the heat flux and resultant temperature rise on plant structures due to a forest fire were also evaluated for Units 1 and 2. The calculated temperature rise (~46.5°C) is less than the allowable temperature rise (bulk 194°C and local 361°C). Therefore, a forest fire will not cause thermal damage to VEGP safety-related structures, based on the distance from the forest.

The centerline of VEGP Units 3 and 4 is approximately 2,100 feet west and 400 feet south of the center of the Unit 2 containment building. The Unit 4 containment is approximately 800 feet west of the Unit 3 containment. It is assumed that the distance from the nearest forest to VEGP Units 3 and 4 is the same as that from the forest to VEGP Units 1 and 2. Since Units 3 and 4 are approximately adjacent to Units 1 and 2 and the vegetation in the vicinity remains the same even after revegetation of the Units 3 and 4 construction site, the toxic chemicals emitted from a forest fire and the emission concentrations in the control room would have the same effect for Units 3 and 4. Therefore, the release of toxic combustion products from the onsite forest fire does not pose a hazard to the Units 3 and 4 control room operators.

2.2.3.3.2 Fire Due to an Accident at Offsite Industrial Storage Facility

Georgia Power Company's combustion turbine plant (Plant Wilson) is located approximately 1,350 meters from the VEGP Units 1 and 2 control room. Of the chemicals and toxic substances stored at this location, diesel fuel oil and miscellaneous oils are flammable. Based on a previous evaluation, a diesel fuel oil fire at Plant Wilson bounds the impacts from any fires of miscellaneous oils stored at Plant Wilson. One of the three tanks containing no. 2 diesel fuel oil is assumed to burn. The entire tank volume of 3×10^6 gallons is spilled into a dike area of 8,756 m^2.

The primary products of combustion emitted from a diesel fuel oil fire at Plant Wilson are CO, CO_2, CH_4, NO_2, SO_2, and SO_3. The toxicity limits in ppm for these constituents are 50 (CO), 5,000 (CO_2), 1.43×10^5 (CH_4), 2 (SO_2 and SO_3), and 3 (NO_2). Using the Briggs plume rise equations and by assuming the maximum burning rate of 0.12 inches/min, the maximum emission rate, duration of fire (8 hours), class A stability, and wind speeds (0.25-10 m/s), it was determined that the resulting concentrations of the primary products of combustion outside the Units 1 and 2 control room air intakes would not approach the above listed toxicity limits.

Using the methodology described in NUREG/CR-1748, the heat flux and resultant temperature rise on the VEGP structures due to a diesel fuel oil fire at Plant Wilson were also evaluated for the Units 1 and 2 control rooms. The calculated temperature rise (115°C) is less than the maximum allowable temperature rise (bulk 194°C and local 361°C). Since a fire at Plant Wilson is limiting (the largest source at the closest distance to the VEGP site), it is concluded that source fires and vapor cloud fires resulting from a delayed ignition at nearby industrial facilities will not cause thermal damage to safety-related structures at VEGP Units 1 and 2.

Units 3 and 4 are located at a farther distance from Plant Wilson than Units 1 and 2. Drawing from the conclusion based on the previous evaluation of Units 1 and 2, any industrial fire due to diesel oil or miscellaneous oils stored at Plant Wilson would not have an impact on control room habitability or cause thermal damage to safety-related structures at Units 3 and 4.

2.2.3.4 Radiological Hazards

Insert the following paragraph after the first paragraph in ESPA SSAR Subsection 2.2.3.4.

VEGP COL 2.2-1 The effect on the control rooms of VEGP Unit 3 and 4 of a postulated design basis accident (DBA) in Unit 1 or 2 was evaluated based on a LOCA in Unit 1 or 2, at uprated conditions, using the releases produced from the alternate source term (AST) methodology. The dose at the Unit 3 and 4 control rooms were determined considering the time-dependent source terms, the atmospheric dispersion factors (χ/Q values), the assumed occupancy rates, the volume of the control room, the HVAC filtration and flow rates, and the operator breathing rates. The χ/Q values from the containment of Unit 2 to the Units 3 and 4 control room air intakes were conservatively calculated using the same methodology and meteorology as was used to calculate the control room χ/Q values presented in Section 2.3.4. Breathing rates were assumed to be constant for the control room operators for the duration of the period evaluated. The occupancy rate in the control room was assumed to be 100 percent for the first 24 hours and then decreasing to 60 percent for the next 3 days and then to 40 percent over the remainder of the 30

day period. The resultant dose from this analysis is comparable to the dose reported in DCD Tier 2, Table 15.6.5-3 for a postulated LOCA in the AP1000 and is less than the GDC 19 limits.

VEGP DEP 1.1-1

2.2.4 COMBINED LICENSE INFORMATION FOR IDENTIFICATION OF SITE-SPECIFIC POTENTIAL HAZARDS

VEGP COL 2.2-1

This COL item is addressed in Subsections 2.2.3.2.3.1, 2.2.3.2.3.2, 2.2.3.3, 2.2.3.4, and ESPA SSAR Section 2.2.

Add the following new reference in the Section 2.2 References list.

VEGP SUP 2.2-1

201. Murphy, K.G., and K.M. Campe, “Nuclear Power Plant Control Room Ventilation System Design for Meeting General Criterion 19,” U.S. Atomic Energy Commission, 13th Air Cleaning Conference, 1974.

202. U.S. Environmental Protection Agency, “ALOHA (Areal Location of Hazardous Atmospheres),” Version 5.4.1, February 2007.

VEGP COL 6.4-1

Table 2.2-201 (Sheet 1 of 2)
AP1000 (VEGP Units 3 and 4) Onsite Chemicals

SYSTEM	FUNCTION	CHEMICAL[a]	QUANTITY (Gallons)
Turbine Island Chemical Feed System (CFS)			
ASS, FWS, BDS, (SG W/L)	Oxygen Scavenger	Hydrazine Carbohydrazine (S/D)	800
CDS	Oxygen Scavenger	Hydrazine Carbohydrazine (S/D)	800
FWS, ASS, BDS, (SG W/L)	pH Control	Sulfuric Acid Ammonium Hydroxide Methylphosphonic Acid (MPS) Morpholine Methoxypropylamine (MPA)[e]	800
CDS	pH Control	Sulfuric Acid Ammonium Hydroxide Methylphosphonic Acid (MPS) Morpholine Methoxypropylamine (MPA)[e]	800
ASS	Various (Cleaning/Lay-up)	ASS Batch Chemicals	240
SWS, CWS	Dispersant,Scale/ Corrosion Inhibitor	Polyacrylate Orthopolyphosphate Phosphonate Sodium Molybdate Tolytriazole Phosphinosuccinic Oligomer (PSO)[e] Phosphoric Acid[e] Proprietary tagged high strength polymer[e]	10000
DTS	Scale Inhibitor	Phosphonate Polyacrylate	800
SWS, CWS	Algaecide	Quaternary Amine	800
SWS, CWS	Biocide	Sodium Hypochlorite Stabilized bromine[e] Sodium bromide[e]	10000
SWS, CWS	pH Control	Sulfuric Acid Ammonium Hydroxide Methylphosphonic Acid (MPS) Morpholine	10000
DTS	pH Control	Sulfuric Acid Ammonium Hydroxide Methylphosphonic Acid (MPS) Morpholine	800

VEGP COL 6.4-1

Table 2.2-201 (Sheet 2 of 2)
AP1000 (VEGP Units 3 and 4) Onsite Chemicals

SYSTEM	FUNCTION	CHEMICAL[a]	QUANTITY (Gallons)
CWS	Detoxification	Aluminum bisulfite[e]	1000
Standby Diesel Fuel Oil System (DOS)			
DOS	Standby Diesel Fuel	No. 2 Diesel Fuel Oil	122600[b]
Plant Gas System (PGS)			
PGS	–	Nitrogen	1500 27735 scf[c]
PGS	–	Hydrogen	1500 500 scf
PGS	–	Carbon Dioxide	6 tons 104800 scf
Central Chilled Water System (VWS)			
VWS	Corrosion Inhibitor	Sodium Molybdate Tolytriazole	45[d]
VWS	Antifreeze	Ethylene/Propylene Glycol	45[d]

a) The chemicals listed in this column represent all chemicals listed for the specific use in the adjacent column.

b) This value is derived from the change from 85,000 gallons of fuel oil to 60,000 gallons (x 2 tanks) plus the same 1300 gallon volume for the two day tanks in the DG Building.

c) This value represents the total volume of all three high pressure nitrogen gas bottles in standard cubic feet. The bottle volume is 58 cubic feet each.

d) This tank volume is based on the 30 gallon high capacity chemical feed tank and the 15 gallon low capacity feed tank. This value represents the potential of having both tanks filled with the same solution, though it may be unlikely that this will occur at the same time. It is assumed that the solution inside the chemical addition tanks would be no more than 50% by volume of the chemical, greatly limiting their potential for flammability or explosion.

e) These chemicals are in addition to those proposed by Westinghouse for use in the Turbine Island Chemical Feed System. These are comparable in function and are the same as those used for similar applications in VEGP Units 1 and 2.

2.3 METEOROLOGY

This section of the referenced DCD is incorporated by reference with the following departures and/or supplements.

This section of the referenced ESPA SSAR is incorporated by reference with the following variances and/or supplements.

2.3.1.3.4 Precipitation Extremes

Insert the following after the last paragraph of ESPA SSAR Subsection 2.3.1.3.4.

VEGP SUP 2.3-1 The AP1000 safety-related roofs are sloped and designed to handle winter snowpack with margin to handle rainfall on top of the snowpack. The AP1000 design basis snow load of 75 psf (ground) and 63 psf (roof) has sufficient margin to include the weight of rain water adding to a pre-existing snow pack. Using ASCE 7-98 the design snow load 50 psf (ground) converts to 42 psf (roof). Therefore, the AP1000 design includes a 21 psf (63 - 42) margin above the design ASCE 7-98 requirement. This margin could accommodate the equivalent weight of 4" of water within the snow on the roof.

Winter PMP loads in excess of this loading are not considered credible based on the design of the roof. The safety related roofs are constructed of 15" thick reinforced concrete supported by steel beams. The roofs will not deflect enough to hold water under the snow load; therefore, ponding of rain water with pre-existing snow pack conditions will not occur. The physical arrangement of the AP1000 sloped roof is designed such that the 100-year snow pack will not prevent the winter PMP water from draining off the sloped roof system.

In addition the AP1000 roof includes R10 insulation that assures uniform temperatures on the roof surface. This minimizes the potential for ice dams that are typically formed across roofs with a temperature differential.

For the VEGP site, the 100 year snow load is 10 psf which is well within the 63 psf design basis snow load of the AP1000. Thus, for the VEGP site, a 53 psf margin is available to accommodate winter PMP water that may be impounded in the 100-year snow pack as the water flows off of the roof.

Insert the following new subsection after ESPA SSAR Subsection 2.3.3.3.

VEGP COL 2.3-3

2.3.3.4 VEGP Meteorological Monitoring Program Compliance

The meteorological monitoring program operated in support of VEGP Units 1 and 2 will also support the operation of VEGP Units 3 and 4. Characteristics of this monitoring program, include:

- siting of the meteorological tower with respect to potential obstructions to air flow (e.g., containment structures, cooling towers, tree lines),
- descriptions of the meteorological instrumentation (e.g., performance specifications, methods and equipment for recording sensor output, QA program for sensors and recorders, and data acquisition and reduction procedures), and
- operation, maintenance, and calibration procedures.

The NRC evaluated the meteorological monitoring program as part of the ESPA SSAR safety evaluation site audit on December 6, 2006 and through their review of ESPA SSAR Subsection 2.3.3.

The current monitoring program and its implementation were determined to meet the guidance in Proposed Revision 1 to Regulatory Guide 1.23 and found to provide an acceptable basis for estimating atmospheric dispersion conditions for accidental and routine releases of radioactive material to the atmosphere.

2.3.4 SHORT-TERM DIFFUSION ESTIMATES

Insert the following text at the beginning of ESPA SSAR Subsection 2.3.4.

VEGP COL 2.3-4

This subsection addresses the determination of conservative, short-term atmospheric dispersion estimates due to postulated design-basis, accidental releases of radioactive material to the ambient air for receptors located:

- on the Exclusion Area Boundary (EAB) and the outer boundary of the Low Population Zone (LPZ) (ESPA SSAR Subsections 2.3.4.1 and 2.3.4.2) to support the evaluation of offsite radiological consequences; and
- at air intake points to the control room (Subsection 2.3.4.3) to support the evaluation of personnel exposures inside the control room and the design of the control room habitability system.

This subsection also briefly addresses the determination of accident-related concentrations at the control room due to onsite and/or offsite airborne releases of

hazardous materials such as flammable vapor clouds, toxic chemicals, and smoke from fires (Subsection 2.3.4.4).

In the AP1000 reactor DCD, the terms “site boundary” and “exclusion area boundary” are used interchangeably. Thus, the χ/Q value specified for the site boundary applies whenever a discussion in the DCD refers to the exclusion area boundary. In the ESPA SSAR Subsections 2.3.4.1 and 2.3.4.2 site specific χ/Q calculations, the term “Dose Calculation EAB” is equivalent to the DCD term “EAB”.

Short-term, dispersion-related site parameters at the site boundary and the LPZ boundary, on which the AP1000 design is based, are identified in DCD Tier 1, Table 5.0-1, DCD Tier 2, Table 2-1, and DCD Tier 2, Table 15A-5. As indicated above, site-specific dispersion characteristics that correspond to these site parameters are presented in ESPA SSAR Subsections 2.3.4.1 and 2.3.4.2.

Short-term, dispersion-related site parameters at the control room, also incorporated in the AP1000 design, are identified in DCD Tier 1, Table 5.0-1, DCD Tier 2, Table 2-1, and DCD Tier 2, Table 15A-6. Site-specific dispersion characteristics that correspond to these site parameters are presented in Subsection 2.3.4.3.

Tables 2.0-201 and 2.0-202 compare the applicable site parameters and corresponding site-specific characteristic values.

Insert the following text after the summary of PAVAN χ/Q Results at the end of ESPA SSAR Subsection 2.3.4.2.

VEGP COL 2.3-4 Using the same assumptions and methodology as described in the ESPA SSAR (which relied on DCD Revision 15), the short-term (accidental release) dispersion estimates at the EAB and the LPZ boundary were evaluated using the revised building dimensions provided in DCD Revision 16. That evaluation confirmed that the χ/Q values for the EAB and LPZ remain the same. This result is reasonable given that the designated receptor points at the EAB and the LPZ boundary are beyond the distance that would be influenced by building wake.

2.3.4.3 Radiological Accident Dispersion Estimates at the Control Room

Subsection 2.3.4.3.1 describes the dispersion modeling analysis used to determine short-term, relative concentration estimates associated with a postulated design-basis, accidental release of radioactive material to the atmosphere. The results of this dispersion analysis for receptors at air intake points to the control room are summarized in Subsection 2.3.4.3.2.

2.3.4.3.1 Regulatory Basis and Technical Approach

General Design Criterion 19 (*Control Room*) under 10 CFR Part 50, Appendix A, requires that the control room remain functional so that actions can be taken to operate the nuclear power unit safely under normal conditions and to maintain the plant in a safe state under accident conditions.

Regulatory Guide 1.194, *Atmospheric Relative Concentrations for Control Room Radiological Habitability Assessments at Nuclear Power Plants*, June 2003 (RG 1.194), provides guidance on utilizing the ARCON96 dispersion model to characterize atmospheric dispersion conditions (χ/Q values) that are input to the evaluation of the consequences of accidental airborne radiological releases on control room habitability. The ARCON96 dispersion model is described in NUREG/CR-6331 (*Atmospheric Relative Concentrations in Building Wakes*, PNNL-10521, Revision 1, May 1997). [Reference 201]

Five consecutive calendar years (from 1998 through 2002) of sequential hourly meteorological data, from the onsite monitoring program operated in support of VEGP Units 1 & 2, were input to ARCON96 in model-required format. As such, the estimated χ/Q values represent the composite 5-year period of record. Wind data from both the 10- and 60-m measurement levels were included. Wind speed units of measure were in meters per second.

Joint data recovery of atmospheric stability class and 10-m level wind speed and wind direction was greater than 94 percent for each of the five years. Data recoveries for 60-m level wind data exceeded 95 percent for wind speed during each year, and ranged from about 93 to 97 percent for wind direction for all years except 1998 (at slightly more than 88 percent). Subsections 2.3.2 and 2.3.3 establish that these data are representative of site dispersion characteristics.

χ/Q values were estimated at two air intake points leading to the control room—at the Heating Ventilation and Air Conditioning (HVAC) system intake and at the annex building access door (i.e., the pathway for outside air to the control room is that due to building ingress/egress). These two air intake points, designated as Receptors 1 and 2, respectively, are illustrated in DCD Figure 15A-1.

These receptors may be contaminated by accidental radiological releases from any of eight potential sources (the two- or four-letter Source Indicator is included in the ARCON96 model):

- plant vent (Source Indicator - PV);
- passive containment cooling system (PCS) air diffuser (Source Indicator - AD);
- fuel building blowout panel (Source Indicator - BP);
- fuel building rail bay door (Source Indicator - BD);

- a steam vent (or line) break (Source Indicator - SV);
- Power Operated Relief Valves (PORV) and safety valves (Source Indicator - PORV);
- condenser air removal stack (Source Indicator - AR); and
- the containment shell (Source Indicator - CS).

These potential release points, designated as Sources 1 to 8, respectively, are also illustrated in DCD Figure 15A-1. Note that Source 4, the fuel building rail bay door in the list above, is referred to as the "Radwaste Building Truck Staging Area Door" in DCD Figure 15A-1.

The receptor locations are also reflected in the ARCON96 model and may be distinguished by the respective two-letter indicators "CR" (i.e., control room HVAC intake) and "AN" (annex building access door).

The release types used in the ARCON96 modeling analyses follow those specified in DCD Tier 2, Chapter 15, Appendix 15A. DCD Figure 15A-1 shows that among the potential release sources, the containment shell is considered to be a diffuse area source. All other releases are considered to be point sources.

The Regulatory Position in Section 3.2.2 of RG 1.194 specifies that the stack release mode in ARCON96 is appropriate for releases from a freestanding, vertical, uncapped stack that is outside the directionally dependent zone of influence of adjacent structures. Furthermore, RG 1.194 states that such a stack should be more than 2-1/2 times the height of adjacent structures. From DCD Table 15A-7, the height of the plant vent is 55.7 m above grade; the condenser air removal stack only 38.4 m above grade. Given that the PCS air diffuser sits atop the containment shield building at an elevation of 69.8 m above grade, the vertical criterion for stack releases is not met. Therefore, modeling these sources in stack release mode was not considered.

The Regulatory Position in Section 3.2.3 of RG 1.194 states that modeling sources using the vent release mode "may not be sufficiently conservative for accident evaluations" and so "should not be used in design basis assessments". As neither a release from the condenser air removal stack nor the plant vent can be represented as stack releases, both potential sources were considered to be ground-level releases in the ARCON96 modeling analyses.

Different building cross-sectional areas were input to the model depending on the receptor being evaluated. For the annex building access door, a building cross-sectional area of 2,636 m^2 was used. This receptor, at an assumed elevation of 1.5 m, is located in a region where the air flow is under the influence of the combined structural wakes generated by the entire containment shield building, the auxiliary building, and the annex building. However, for this modeling analysis, the wake effects induced by the auxiliary building and the annex building were not

considered. By excluding these two structures, the total building cross-sectional area is reduced, which is a relatively conservative assumption in that a smaller cross-sectional area results in higher χ/Q values.

The 2,636 m^2 cross-sectional area is based on an assumed diameter of the containment shield building of 43.3 m and an effective structural height of 60.9 m. The assumed diameter of the containment is slightly smaller than the actual diameter and is conservative since the smaller diameter results in a higher χ/Q. The effective structural height takes into account the fact that the containment shield building is a tapered structure beginning at elevation 170.84 ft above grade. The overall height of this building is 228.75 ft above grade. The effective structural height is taken, then, as the mid-point between the start of the taper and the overall building height—that is, 199.8 ft or 60.9 m.

For the receptor at the control room HVAC system intake, a cross-sectional area of 1,805 m^2 was assumed. This receptor, at an elevation of 19.9 m above grade, is located within the wake generated by that portion of the containment shield building that extends above the roof of the auxiliary building where this receptor is situated. The difference between the effective structural height of the containment shield building (i.e., 60.9 m, as discussed above) and the roof height of this part of the auxiliary building (i.e., 19.2 m above grade) is multiplied by the diameter of the containment shield building (i.e., 43.3 m) to yield the cross-sectional area input to the ARCON96 model for estimating χ/Q values at this receptor.

Specification of initial diffusion coefficients is only applicable to a hypothetical release from the containment shell which was modeled as a diffuse area source, as indicated previously. The Regulatory Positions in Sections 3.2.4.4 and 3.2.4.5 of RG 1.194 indicate that in the absence of site-specific empirical data, as is the case here, the initial horizontal and vertical diffusion coefficients may be estimated as follows:

- Sigma-y_o = Area Source Width ÷ 6; and
- Sigma-z_o = Area Source Height ÷ 6.

Consistent with those regulatory positions, the area source width and height are based on the horizontal and vertical dimensions used to determine the building cross-sectional areas input to the ARCON96 modeling analyses. For the receptor at the annex building access door, Sigma-y_o and Sigma-z_o are estimated to be 7.2 m (i.e., 43.3 m ÷ 6) and 10.2 m (i.e., 60.9 m ÷ 6), respectively. For the receptor at the control room HVAC intake, Sigma-y_o and Sigma-z_o are estimated to be 7.2 m (i.e., 43.3 m ÷ 6) and 7.0 m (i.e., 41.7 m ÷ 6), respectively.

Other parameters input to ARCON96 that are based on the recommendations in RG 1.194, Table A-2 (which are different, in some cases, than the default values in the model user's guidance, Reference 201) include:

- Surface Roughness Length = 0.2 (rather than the model default value of 0.1);
- Averaging Sector Width Constant = 4.3 (rather than the model default value of 4.0);
- Vertical Velocity, Stack Radius, and Stack Flow = 0 (all sources are assumed to be ground-level releases and so vertical velocity and stack radius are not used; stack flow during the course of an accident cannot be demonstrated with reasonable assurance);
- Release Height Elevation Difference = 0 (differences in grade elevations between all sources and receptors are only a few feet or less); and
- Wind Direction Window = 90 (default value in both RG 1.194 and Reference 201).

Finally, DCD Table 15A-7 lists the heights of the two modeled receptors and the eight potential sources of radioactive releases, the straight-line distances between these sources and the respective receptors.

2.3.4.3.2 ARCON96 Modeling Results

The χ/Qs determined by the ARCON96 dispersion model represent 95th-percentile values based on all of the hourly relative concentrations calculated using the 5-year meteorological data set input to the model. χ/Q values at the control room HVAC intake and at the annex building access door for time averaging intervals of 0-2 hours, 2-8 hours, 8-24 hours, 1-4 days, and 4-30 days are summarized in Tables 2.3-201 and 2.3-202, respectively.

2.3.4.4 Dispersion Estimates Associated with Accidental Onsite and Offsite Hazardous Material Releases

Potential control room habitability effects and personnel exposures at VEGP Units 3 & 4 due to:

- postulated accidental releases of chemicals and other hazardous materials stored onsite, and at offsite locations within 5 miles of the units;
- for toxic or flammable materials carried over nearby transportation routes (e.g., roadways, railways, and waterways); and
- explosions

were addressed in Subsection 2.2.3 and in ESPA SSAR Section 2.2.

Concentrations at the control room HVAC intake and at the annex building access door due to accidental hazardous chemical releases were determined and

evaluated in consideration of the guidance in Regulatory Guide 1.78, *Evaluating the Habitability of a Nuclear Power Plant Control Room During a Postulated Hazardous Chemical Release*, Revision 1, December 2001.

2.3.5 LONG-TERM DIFFUSION ESTIMATES

Insert the following text after the last paragraph of ESPA SSAR Subsection 2.3.5.

VEGP COL 2.3-5 In the AP1000 reactor DCD, the terms “site boundary” and “exclusion area boundary” (EAB) are used interchangeably. Thus, the χ/Q specified for the site boundary applies whenever a discussion in the DCD refers to the exclusion area boundary. In ESPA SSAR Subsection 2.3.5 site specific χ/Q calculations, the term “Dose Calculation EAB” is equivalent to the DCD term “EAB”.

Using the same assumptions and methodology as described in the ESPA SSAR (which relied on DCD Revision 15), along with the building dimensions provided in DCD Revision 16, the long-term (routine release) dispersion and deposition estimates were evaluated at the Dose Calculation EAB and at the various receptor locations described in the ESPA SSAR. This evaluation confirmed that the χ/Q values for the EAB and the various receptor locations are bounded by those provided in the ESPA. This result is reasonable given that the designated receptor points at the EAB and the various receptor locations are beyond the distance that would be influenced by building wake.

2.3.6 COMBINED LICENSE INFORMATION

2.3.6.1 Regional Climatology

VEGP COL 2.3-1 This COL item is addressed in ESPA SSAR Subsection 2.3.1

2.3.6.2 Local Meteorology

VEGP COL 2.3-2 This COL item is addressed in ESPA SSAR Subsection 2.3.2

2.3.6.3 Onsite Meteorological Measurements Program

VEGP COL 2.3-3 This COL item is addressed in Subsection 2.3.3.4 and ESPA SSAR Subsection 2.3.3

2.3.6.4 Short-Term Diffusion Estimates

VEGP COL 2.3-4 This COL item is addressed in Subsections 2.3.4, 15.6.5.3.7.3, Appendix 15A.3.3, and ESPA SSAR Subsection 2.3.4

2.3.6.5 Long Term Diffusion Estimates

VEGP COL 2.3-5 This COL item is addressed in Subsection 2.3.5 and ESPA SSAR Subsection 2.3.5

Add the following information after DCD Subsection 2.3.6.5

VEGP SUP 2.3-2

2.3.7 REFERENCES

201. NUREG/CR-6331, *Atmospheric Relative Concentrations in Building Wakes*, PNNL-10521, Revision 1, May 1997.

VEGP COL 2.3-4

Table 2.3-201
ARCON96 X/Q Values at the
Control Room HVAC Intake

Release Point	0 – 2 hours	2 – 8 hours	8 – 24 hours	1 – 4 days	4 – 30 days
Plant Vent	**2.02E-03**	**1.58E-03**	**6.37E-04**	**5.12E-04**	**3.82E-04**
PCS Air Diffuser	**1.68E-03**	**1.29E-03**	**5.47E-04**	**4.55E-04**	**3.34E-04**
Fuel Building Blowout Panel	**1.54E-03**	**1.11E-03**	**4.42E-04**	**3.57E-04**	**2.59E-04**
Fuel Building Rail Bay Door	**1.15E-03**	**8.29E-04**	**3.35E-04**	**2.62E-04**	**1.86E-04**
Steam Line Break	**1.48E-02**	**1.20E-02**	**5.41E-03**	**3.93E-03**	**3.26E-03**
PORV & Safety Valves	**1.31E-02**	**1.02E-02**	**4.62E-03**	**3.29E-03**	**2.77E-03**
Condenser Air Removal Stack	**1.54E-03**	**1.17E-03**	**5.36E-04**	**3.94E-04**	**2.78E-04**
Containment Shell (As Diffuse Area Source)	**3.20E-03**	**1.82E-03**	**8.27E-04**	**7.22E-04**	**5.70E-04**

VEGP COL 2.3-4

Table 2.3-202
ARCON96 X/Q Values at the Annex Building Access Door

Release Point	0 – 2 hours	2 – 8 hours	8 – 24 hours	1 – 4 days	4 – 30 days
Plant Vent	**4.32E-04**	**3.52E-04**	**1.44E-04**	**1.15E-04**	**8.47E-05**
PCS Air Diffuser	**4.48E-04**	**3.38E-04**	**1.44E-04**	**1.17E-04**	**8.77E-05**
Fuel Building Blowout Panel	**3.77E-04**	**2.84E-04**	**1.18E-04**	**9.50E-05**	**6.83E-05**
Fuel Building Rail Bay Door	**3.48E-04**	**2.60E-04**	**1.09E-04**	**8.75E-05**	**6.16E-05**
Steam Line Break	**9.23E-04**	**7.31E-04**	**2.98E-04**	**2.37E-04**	**1.75E-04**
PORV & Safety Valves	**9.81E-04**	**7.69E-04**	**3.12E-04**	**2.49E-04**	**1.87E-04**
Condenser Air Removal Stack	**4.00E-03**	**3.15E-03**	**1.35E-03**	**1.04E-03**	**8.05E-04**
Containment Shell (As Diffuse Area Source)	**3.93E-04**	**3.16E-04**	**1.32E-04**	**1.07E-04**	**8.14E-05**

2.4 HYDROLOGIC ENGINEERING

This section of the referenced DCD is incorporated by reference with the following departures and/or supplements.

This section of the referenced ESPA SSAR is incorporated by reference with the following variances and/or supplements.

VEGP DEP 1.1-1 Subsection 2.4.1 of the DCD is renumbered as Subsection 2.4.15. This is being done to accommodate the incorporation of Regulatory Guide 1.206 numbering conventions for Section 2.4.

2.4.2 FLOODS

2.4.2.3 Effects of Local Intense Precipitation

Add the following to the end of ESPA SSAR Subsection 2.4.2.3.

VEGP COL 2.4-2 Based on work subsequent to the submittal of the referenced ESPA SSAR, the design elements of the VEGP Units 3 and 4 storm water management system pertaining to the local PMP flood event are described below.

As shown in Figure 2.4-201, the VEGP Units 3 and 4 power block is graded to direct runoff east and west to three north-south ditches which will outfall to the concrete-lined main ditch, running east and west for 2,000 feet along the south side of the power block. The trapezoidal ditch cross section has a 10-foot bottom width with 2:1 side slopes, sized to provide adequate conveyance for PMP discharges. At the southwest corner of the power block, the main ditch turns due south, and the bottom width is increased to 14 feet. From the west, it intercepts runoff from the construction laydown area; from the east it intercepts discharge from three ditches draining the cooling tower block.

The main ditch has a mild slope (0.22%) for its first 3,800 feet, at which point the slope increases to over 5% before outfalling about 4,500 feet from its upstream end into Debris Basin No. 2, which drains to an unnamed tributary of Daniels Branch, about 2,500 feet upstream of Telfair Pond.

The main ditch drains runoff from a total area of about 473 acres during the PMP event, including about 80 acres from the VEGP Units 3 and 4 power block, 97 acres from the cooling tower area, 56 acres south of the cooling tower, and 82

acres from the laydown area. An additional 133 acres from an area north of the haul road and 25 acres from VEGP Units 1 and 2 power block are assumed to drain to the main ditch for the PMP design rainfall event due to blocked culverts.

The local PMP event was modeled in HEC-HMS, which is an industry standard program for this application. For inputs of rainfall and drainage basin characteristics, the program outputs stream flow hydrographs at selected locations within the drainage basin (Reference 203).

The design rainfall hyetograph was developed in HEC-HMS utilizing the frequency storm option in the Meteorologic Models module (Reference 204). This option requires the input of PMP point depths for durations of 5, 15, 60, 120, 180, and 360 minutes.

Based on the logarithmic fit to the data shown in ESPA SSAR Table 2.4.2-3, a PMP total depth was estimated for the missing durations, as indicated in Table 2.4-201. An intensity position of 50 percent was selected for the HEC-HMS calculation, consistent with the alternating block pattern used in standard analysis (Reference 201). The rainfall hyetograph developed from the data is shown in Figure 2.4-202.

Elements within the HEC-HMS basin model include subbasins, reaches, and junctions. Runoff hydrographs were developed for subbasins and were routed through the channel system along reaches connected by junctions (Reference 204).

This calculation utilized the SCS Hydrograph Methodology (Reference 204), which requires the following parameters for each subbasin:

- Drainage Area, in square miles
- Runoff Curve Number and Initial Abstractions
- Lag Time, in minutes
- Base flow, in cfs

Drainage areas were delineated and measured for each subbasin shown in Figure 2.4-201.

The runoff curve number (CN) was selected as 98 for all types of cover to provide a conservative estimate of runoff volume and peak discharges and to account for nonlinear basin response to extreme rainfall events. Under normal flood conditions, the area-weighted average for each subbasin could be expected to vary between 50 and 75, while a CN value of 98 is typically used for impervious areas.

The lag time was estimated as 60 percent of the time of concentration, which is the time required for all areas of the drainage basin to be contributing to outflow. It was calculated for each subbasin as the sum of the overland, shallow concentrated, and channel flow times along the critical flow through the basin using standardized equations (Reference 204).

An assumption of the PMP design storm is that a 50-percent PMP storm has occurred 3 days prior to the start of the rainfall associated with the actual PMP event, so some flow in the drainage ditches would be expected as the result of interflow draining from the pervious areas of the upstream watershed, although it would not be a significant quantity for this site, considering the limited drainage area. For this site, base flow is taken as zero for subbasins that are completely paved. Base flow is estimated on a 100 cfs per square mile basis for subbasins with uncovered ground.

The SCS unit hydrograph parameters calculated for each of the subbasins in the HEC-HMS models are provided in Table 2.4-202.

The subbasin hydrographs are added at junctions and routed through channel reaches. Straight lag time was used for the smaller reaches; the kinematic wave routing option for most of the main channel reaches. The routing parameters are shown in Table 2.4-203.

Peak discharges from all subbasins, at all junctions, and at the downstream end of each of the routing reaches resulting from modeling the PMP rainfall event in HEC-HMS are summarized in Table 2.4-204. The highlighted entries indicate junctions along the main ditch. The hydrographs simulated for these junctions are shown in Figure 2.4-203.

The backwater analysis for the PMP drainage network was developed in HEC-RAS (Reference 205). Cross sections were developed for the main drainage ditch and feeder channels with topographic data for the overbank area, using the proposed geometric configuration for the channels, with adjustments to conveyance as necessary to eliminate flooding.

The assumptions made and the data utilized in the development of the hydraulic model are as follows:

- All channels are concrete lined, so no local scoured-out cross sections are utilized in the model.
- All culverts in the power block area are assumed to be 100% blocked by debris collected from the catchment.
- The blocked culverts within the power block area are modeled as in-line weirs in HEC-RAS following common hydraulic engineering practice (Reference 205).

- Peak discharges from the HEC-HMS model were used at all sections in a steady-state calculation. Based on the close coincidence in time of peak discharges along the main channel and in the contributing subbasins, as shown in Table 2.4-204 and Figure 2.4-202, this was considered to be a reasonable simplification.

Peak PMP discharges simulated in HEC-HMS at eight locations along the main channel (nodes M1 through M8, as shown in Figure 2.4-201) were utilized in HEC-RAS at the cross sections indicated in Table 2.4-205.

In HEC-HMS, discharge was calculated at two points along each of the feeder ditches 1, 2, and 3, within the power block area. To better represent the lateral inflow to the feeder ditches along their entire length, the discharge from the two HEC-HMS nodes for each ditch were distributed linearly to each section in the models of the respective ditches to better represent lateral inflow, as summarized in Table 2.4-206.

The model was run with the mixed flow regime option with the downstream boundary condition taken as normal depth at Section 45+00, with the energy slope equal to the channel slope at that point of 5 percent (section stationing is shown at 500-foot intervals in Figure 2.4-201). The upstream boundary conditions were also taken as normal depth with an energy slope of 0.0001 to account for the severe backwater effect at the upstream ends of the branches of the drainage system.

The Manning's n roughness values used in the model were selected for standard conservative assumptions (Reference 202) as follows:

- concrete feeder ditches (assumed to be well maintained) with n = .014 and overbank areas assumed to be gravel bottom and concrete curbs with n = .020

- all other ditches assumed to be float-finished concrete lining with n = .015 and overbank areas assumed to be short grass with n = .030

The results of the mixed-flow regime back water calculation for PMP discharges in the drainage network are presented in Table 2.4-207. Flow is supercritical in the steep reach of the main ditch from the downstream section up to section 37+00, with control (Froude No. = 1) at section 38+00, with a velocity of 16.6 fps and a depth of 14.14 feet. Velocities decrease and depths generally increase in the mild-sloped (S = .0022) reach upstream of that section to 3.4 fps and 15.98 feet respectively at section 20+00, and 0.9 fps and 11.96 feet respectively at section 1+00.

The feeder ditches draining the power block area are subject to high tailwater conditions in the main ditch for the PMP runoff event. The HEC-RAS output indicates that the maximum floodwater surface elevation would be between 219.34 ft msl in the SW corner and 219.45 ft msl in the NE corner of the VEGP

Units 3 and 4 power block. As all safety-related facilities have entry elevations at or above 220 ft msl, it has been determined that the maximum local PMP flood elevation is at least 0.55 ft below any entry to any safety related facility, and the flooding of safety-related facilities due to this PMP event does not occur.

In summary, the main ditch system has been designed to convey the peak discharge of the PMP flood event safely offsite. In addition, site grading is sufficiently sloped to convey runoff overland from the local PMP event away from all buildings and safety-related equipment, without flooding.

2.4.10 FLOODING PROTECTION REQUIREMENTS

Add the following paragraphs at the end of ESPA SSAR Subsection 2.4.10.

VEGP COL 2.4-2 The maximum flood elevation in the Savannah River at the VEGP site is El. 178.10 ft msl, resulting from the cascading failure of upstream dams including wind setup and wave run-up, as discussed in ESPA SSAR Subsection 2.4.4. This elevation is well below the VEGP site grade at El. 220 ft msl.

Subsection 2.4.2 subsequently considered the flooding effects of local intense precipitation (also termed as the local probable maximum precipitation or local PMP) on the Units 3 and 4 safety-related structures at the VEGP site. A local PMP drainage analysis was performed by conservatively assuming that all underground storm drains and culverts were clogged. Details of the local PMP analysis and the resulting flood levels are presented in Subsection 2.4.2. As indicated in Subsection 2.4.2, the maximum water level in the Units 3 and 4 power block area due to the local PMP flood event is calculated to be at El. 219.45 ft msl. The entrances and openings for all safety-related facilities are located at or above the VEGP site grade of EL. 220 ft msl.

Thus, none of the VEGP Units 3 and 4 safety-related structures will be adversely affected by any flood event. Consequently, no flood protection measures are required for VEGP Units 3 and 4. Additionally, no technical specifications or emergency procedures to implement flood protection activities are required.

Furthermore, the design of VEGP Units 3 and 4 drainage facilities incorporates measures to ensure that VEGP Units 1 and 2 safety-related facilities are not subject to flooding during construction and operation of VEGP Units 3 and 4. Drainage from the VEGP Units 3 and 4 portion of the site during construction and operation of Units 3 and 4 is directed away from the drainage facilities of Units 1 and 2. Hence, drainage from the VEGP Units 3 and 4 site area do not affect the safety-related structures, systems, and components of VEGP Units 1 and 2.

As discussed in Subsection 3.4.1.1 of the AP1000 DCD (Tier 2), the roofs of all safety-related structures are designed to prevent flooding of, or leakage into, safety-related structures, systems, and components as a result of the PMP on the

roofs. The design basis combination of a 100-year return period ground-level snowpack and 48-hour probable maximum winter precipitation, as applied to safety-related roofs, is discussed in ESPA SSAR Subsection 2.3.1.3.4.

Add the following new subsections after ESPA Subsection 2.4.13.

2.4.14 TECHNICAL SPECIFICATIONS AND EMERGENCY OPERATION REQUIREMENTS

VEGP COL 2.4-6 The elevation (220 ft MSL) of the VEGP is above the design basis river flood elevation and the probable maximum precipitation flood elevation; therefore, due to design there are no requirements for emergency protective measures designed to minimize the impact of hydrology-related events on safety-related facilities, and none are incorporated into the technical specifications or emergency procedures.

VEGP DEP 1.1-1

2.4.15 COMBINED LICENSE INFORMATION

2.4.15.1 Hydrological Description

VEGP COL 2.4-1 This COL item is addressed in ESPA SSAR Subsection 2.4.1.

2.4.15.2 Floods

VEGP COL 2.4-2 This COL item is addressed in Subsection 2.4.2, Subsection 2.4.10 and ESPA SSAR Subsections 2.4.2, 2.4.3, 2.4.4, 2.4.5, 2.4.6, and 2.4.10.

2.4.15.3 Cooling Water Supply

VEGP COL 2.4-3 This COL item is addressed in ESPA SSAR Subsection 2.4.12.

2.4.15.4 Groundwater

VEGP COL 2.4-4 This COL item is addressed in ESPA SSAR Subsection 2.4.12.

2.4.15.5 Accidental Release of Liquid Effluents into Ground and Surface Water

VEGP COL 2.4-5 This COL item is addressed in ESPA SSAR Subsection 2.4.13.

2.4.15.6 Emergency Operation Requirement

VEGP COL 2.4-6 This COL item is addressed in Subsection 2.4.14.

2.4.16 REFERENCES

201. Chow, Maidment, and Mays, “Applied Hydrology,” McGraw-Hill, 1988.

202. Chow, Ven T., “Open Channel Hydraulics,” McGraw-Hill, 1959.

203. United States Army Corps of Engineers, “HEC-HMS Hydrologic Modeling System,” Version 3.0.1 User’s Manual, April 2006.

204. United States Army Corps of Engineers, “HEC-RAS River Analysis,” Version 3.0.1 Technical Reference Manual, March 2000.

205. United States Army Corps of Engineers, “HEC-RAS River Analysis System,” Version 3.1 User’s Manual, November 2002.

VEGP COL 2.4-2

Table 2.4-201
Rainfall Depths Used as Input for Frequency Storm HEC-HMS Module

Duration, Minutes	Depth, Inches
5	6.20[a]
15	9.80[a]
60	19.20[a]
120	23.52[b]
180	25.95[b]
360	31.00[a]

a) Calculated with HMR51/52

b) Calculated by curve fitting

VEGP COL 2.4-2

Table 2.4-202
Subbasin Parameters for Entry in Unit 3 & 4 Drainage System
HEC-HMS Model

Subbasin	Subbasin Area			Base flow?	Baseflow, cfs	Tc, min	Lag, min
	sq. ft	acres	sq. mi.	0:no, 1: yes			
FD1W	222,801	5.11	0.0080	0	0.0	13.9	8.4
FD2E	373,473	8.57	0.0134	0	0.0	26.4	15.8
FD2W	265,336	6.09	0.0095	0	0.0	24.8	14.9
FD3E	387,040	8.89	0.0139	0	0.0	10.8	6.5
FD3W	576,756	13.24	0.0207	1	2.1	22.2	13.3
FD5aN	555,561	12.75	0.0199	0	0.0	9.9	5.9
FD6aE	407,411	9.35	0.0146	1	1.5	18.7	11.2
FD6bE	872,411	20.03	0.0313	1	3.1	22.8	13.7
LD2	885,606	20.33	0.0318	1	3.2	13.7	8.2
LD3	295,463	6.78	0.0106	1	1.1	12.9	7.7
LD4	302,610	6.95	0.0109	1	1.1	12.0	7.2
LD5	133,962	3.08	0.0048	1	0.5	9.8	5.9
M1S	245,755	5.64	0.0088	0	0.0	9.1	5.5
M1W	210,975	4.84	0.0076	0	0.0	8.7	5.2
M2E	354,572	8.14	0.0127	0	0.0	10.6	6.3
M2S	650,674	14.94	0.0233	0	0.0	21.4	12.8
M2W	252,841	5.80	0.0091	0	0.0	8.9	5.4
M3E	406,105	9.32	0.0146	0	0.0	8.1	4.9
M3S	821,527	18.86	0.0295	0	0.0	15.6	9.3
M3W	578,010	13.27	0.0207	1	2.1	18.7	11.2
M4W	94,250	2.16	0.0034	1	0.3	15.3	9.2
M5W	289,232	6.64	0.0104	1	1.0	15.9	9.5
M6E	744,743	17.10	0.0267	0	0.0	11.3	6.8
M6W	394,537	9.06	0.0142	1	1.4	14.5	8.7
M7E	544,496	12.50	0.0195	1	2.0	20.1	12.1
M7W	290,945	6.68	0.0104	1	1.0	14.2	8.5
M8Cat	1,831,895	42.05	0.0657	1	6.6	37.6	22.6
M8W	326,470	7.49	0.0117	1	1.2	14.3	8.6
OF1	4,204,636	96.53	0.1508	1	15.1	45.5	27.3
OF2	1,597,617	36.68	0.0573	1	5.7	32.0	19.2
UN12-N	762,505	17.50	0.0274	0	0.0	25.1	15.1
UN12-S	758,482	17.41	0.0272	0	0.0	25.1	15.1
Totals:	20,638,697	473.80	0.7403	0	48.9		

VEGP COL 2.4-2

Table 2.4-203
Routing Parameters for Reaches in South-Side Drainage System Model

Direct Lag Reaches:

Reach	Length, ft.	vel., fps	lag. min.
FD1-M1	600	2	5.0
FD2-M2	600	1	10.0
FD3-M3	700	3.5	3.3
FD5a-M6	1150	3.5	5.5
FD6a-M7	1150	3.5	5.5
FD6b-a	900	3.5	4.3
M3-M4	200	5	0.7
OF1-FD3	N/A	*	23.9
OF2-FD3	N/A	**	10.0
RROF2-M3	775	2.1	6.2
RROF3-M5	600	2.1	4.8
RROF4-M6	600	2.1	4.8
RROF5-M7	600	2.1	4.8

* Use the time of concentration for subbasin FD3W for lag time.
** Use shallow concentrated flow velocity from FD3W for 350 feet and total ditch flow time.

Kinematic Wave Reaches:

Reach	Length, ft.	slope ft./ft.	n	# Subreaches	Shape	W, ft.	XH:1V
M1-M2	900	0.0022	0.015	2	TRAP	10	2
M2-M3	1,100	0.0022	0.015	2	TRAP	10	2
M4-M5	500	0.0022	0.015	2	TRAP	14	2
M5-M6	600	0.0022	0.015	2	TRAP	14	2
M6-M7	450	0.0022	0.015	2	TRAP	14	2
M7-M8	670	0.0526	0.015	2	TRAP	14	2

VEGP COL 2.4-2

Table 2.4-204
Summary Results of HEC-HMS Model of Unit 3 & 4 PMP Drainage System (Sheet 1 of 2)

Element	Area, mi^2	Qpeak, cfs	Time of peak *	Runoff	
				inches	ac-ft
FD1	0.0354	698	01Jan2007, 03:15	30.68	57.9
FD1-M1	0.0354	698	01Jan2007, 03:20	30.68	57.9
FD1W	0.0080	200	01Jan2007, 03:10	30.68	13.1
FD2	0.0229	434	01Jan2007, 03:20	30.68	37.5
FD2E	0.0134	253	01Jan2007, 03:20	30.68	21.9
FD2-M2	0.0229	434	01Jan2007, 03:30	30.68	37.5
FD2W	0.0095	183	01Jan2007, 03:15	30.68	15.5
FD3	0.2427	2,924	01Jan2007, 03:45	34.19	442.5
FD3E	0.0139	380	01Jan2007, 03:10	30.68	22.7
FD3-M3	0.2427	2,924	01Jan2007, 03:50	34.19	442.5
FD3W	0.0207	426	01Jan2007, 03:15	34.45	38
FD5a	0.0199	547	01Jan2007, 03:10	30.68	32.6
FD5a-M6	0.0199	547	01Jan2007, 03:15	30.68	32.6
FD5aN	0.0199	547	01Jan2007, 03:10	30.68	32.6
FD6a	0.0459	902	01Jan2007, 03:20	34.41	84.2
FD6aE	0.0146	321	01Jan2007, 03:15	34.5	26.9
FD6a-M7	0.0459	902	01Jan2007, 03:25	34.41	84.2
FD6b	0.0313	635	01Jan2007, 03:15	34.36	57.4
FD6b-a	0.0313	629	01Jan2007, 03:20	34.36	57.4
FD6bE	0.0313	635	01Jan2007, 03:15	34.36	57.4
LD2	0.0318	808	01Jan2007, 03:10	34.42	58.4
LD3	0.0106	277	01Jan2007, 03:10	34.54	19.5
LD4	0.0109	291	01Jan2007, 03:10	34.43	20
LD5	0.0048	133	01Jan2007, 03:10	34.55	8.8
M1	0.0790	1,433	01Jan2007, 03:15	30.68	129.3
M1-M2	0.0790	1,420	01Jan2007, 03:20	30.7	129.3
M1S	0.0088	241	01Jan2007, 03:10	30.68	14.4
M1W	0.0076	207	01Jan2007, 03:10	30.68	12.4

* for an assumed start of storm time of 01 Jan 2007, 0:00 hours

VEGP COL 2.4-2

Table 2.4-204
Summary Results of HEC-HMS Model of Unit 3 & 4 PMP Drainage System (Sheet 2 of 2)

Element	Area, mi^2	Qpeak, cfs	Time of peak *	Runoff	
				inches	ac-ft
M2	0.1470	2,546	01Jan2007, 03:15	30.69	240.6
M2E	0.0127	349	01Jan2007, 03:10	30.68	20.8
M2-M3	0.1470	2,530	01Jan2007, 03:15	30.7	240.7
M2S	0.0233	486	01Jan2007, 03:15	30.68	38.1
M2W	0.0091	249	01Jan2007, 03:10	30.68	14.9
M3	0.4863	6,291	01Jan2007, 03:15	32.84	851.8
M3E	0.0146	403	01Jan2007, 03:05	30.68	23.9
M3-M4	0.4863	6,291	01Jan2007, 03:15	32.84	851.8
M3S	0.0295	699	01Jan2007, 03:10	30.68	48.3
M3W	0.0207	455	01Jan2007, 03:15	34.45	38
M4	0.4897	6,367	01Jan2007, 03:15	32.85	858
M4-M5	0.4897	6,336	01Jan2007, 03:15	32.86	858.1
M4W	0.0034	81	01Jan2007, 03:10	33.96	6.2
M5	0.5107	6,835	01Jan2007, 03:15	32.92	896.7
M5-M6	0.5107	6,790	01Jan2007, 03:15	32.93	896.8
M5W	0.0104	244	01Jan2007, 03:10	34.25	19
M6	0.5824	8,463	01Jan2007, 03:15	32.81	1019.1
M6E	0.0267	723	01Jan2007, 03:10	30.68	43.7
M6-M7	0.5824	8,431	01Jan2007, 03:15	32.82	1019.3
M6W	0.0142	351	01Jan2007, 03:10	34.35	26
M7	0.6630	9,919	01Jan2007, 03:15	33.01	1167.3
M7E	0.0195	418	01Jan2007, 03:15	34.49	35.9
M7-M8	0.6630	9,896	01Jan2007, 03:15	33.01	1167.4
M7W	0.0104	260	01Jan2007, 03:10	34.25	19
M8	0.7404	11,021	01Jan2007, 03:15	33.16	1309.5
M8Cat	0.0657	1,058	01Jan2007, 03:25	34.41	120.6
M8W	0.0117	291	01Jan2007, 03:10	34.49	21.5
OF1	0.1508	2,203	01Jan2007, 03:30	34.4	276.7
OF1-FD3	0.1508	2,178	01Jan2007, 03:55	34.4	276.7
OF2	0.0573	993	01Jan2007, 03:20	34.38	105.1
OF2-FD3	0.0573	993	01Jan2007, 03:30	34.38	105.1
RROF2	0.0318	808	01Jan2007, 03:10	34.42	58.4
RROF2-M3	0.0318	763	01Jan2007, 03:15	34.42	58.4
RROF3	0.0106	277	01Jan2007, 03:10	34.54	19.5
RROF3-M5	0.0106	267	01Jan2007, 03:15	34.54	19.5
RROF4	0.0109	291	01Jan2007, 03:10	34.43	20
RROF4-M6	0.0109	278	01Jan2007, 03:15	34.43	20
RROF5	0.0048	133	01Jan2007, 03:10	34.55	8.8
RROF5-M7	0.0048	124	01Jan2007, 03:15	34.55	8.8
UN12-N	0.0274	522	01Jan2007, 03:15	30.68	44.8
UN12-S	0.0272	518	01Jan2007, 03:15	30.68	44.5

* for an assumed start of storm time of 01 Jan 2007, 0:00 hours

VEGP COL 2.4-2

Table 2.4-205
Location of Main Channel Discharge Points in
HEC-RAS Model

Main Ditch Section	HEC-RAS Section	PMP Q, cfs	Comment	HEC-HMS node
0+00	46	759	Upstream end of model	M1S+UN12-S
0+60	45.1	1433	Confluence of Feeder Ditch 1	M1
10+00	36	2546	Confluence of Feeder Ditch 2	M2
20+00	26	6291	Confluence of Feeder Ditch 3	M3
22+00	24	6367	Confluence of Feeder Ditch 4	M4
27+00	19	6835	Local Inflow	M5
33+00	13	8463	Confluence of Feeder Ditch 5	M6
38+00	8	9919	Confluence of ditch (not modeled)	M7
45+00	1	11021	Local Inflow	M8

VEGP COL 2.4-2

Table 2.4-206
Location of Main Channel Discharge Points in
HEC-RAS Model

Feeder Ditch	HEC-RAS Section	PMP Q, cfs	Comment	HEC-HMS node
1	83	103	Distribute discretized HEC-HMS node flow between all HEC-RAS sections	
1	82	206		
1	81	309		
1	80	413		
1	79	516		
1	78	619		
1	77	722	Q = FD1W + UN12-N	FD1
1	76	843	Distribute discretized HEC-HMS node flow between all HEC-RAS sections	
1	75	964		
1	74	1085		
1	73	1205		
1	72	1326		
1	71	1447	Q = M1W + UN12-S + FD1W + UN12-N	U/S of M1
2	83	62	Distribute discretized HEC-HMS node flow between all HEC-RAS sections	
2	82	124		
2	81	186		
2	80	249		
2	79	311		
2	78	373		
2	77	435	Q = FD2W + FD2E	FD2
2	76	535	Distribute discretized HEC-HMS node flow between all HEC-RAS sections	
2	75	634		
2	74	734		
2	73	834		
2	72	933		
2	71	1033	Q = M2W + M2E + FD2W + FD2E	U/S of M2
3	83	568	Distribute discretized HEC-HMS node flow between all HEC-RAS sections	
3	82	1136		
3	81	1705		
3	80	2273		
3	79	2841		
3	78	3409		
3	77	3978	Q = FD3W + FD3E + OF1-FD3 + OF2-FD3	FD3
3	76	4172	Distribute discretized HEC-HMS node flow between all HEC-RAS sections	
3	75	4366		
3	74	4561		
3	73	4755		
3	72	4949		
3	71	5144	Q = Sum(FD3)+ M3E + RROF2-M3	U/S of M3

VEGP COL 2.4-2

Table 2.4-207
Summary of HEC-RAS output for PMP Profile
(Sheet 1 of 3)

HEC-RAS identification scheme			Section stationing	Q Total	Min Ch El	W.S. Elev	Crit W.S.	E.G. Elev	Vel Chnl	Froude # Chl
Channel	Reach	Station		(cfs)	(ft)	(ft)	(ft)	(ft)	(ft/s)	
Main Ditch	1	46	00+00	759	207.66	219.37	212.31	219.37	0.50	0.03
Main Ditch	1	45.5	00+30	759	207.66	219.37	212.31	219.37	0.50	0.03
Main Ditch	M1-M2	45.1	00+60	1433	207.56	219.37	214.47	219.37	0.94	0.05
Main Ditch	M1-M2	45	01+00	1433	207.41	219.37	213.84	219.37	0.93	0.05
Main Ditch	M1-M2	44	02+00	1433	207.19	219.37	213.68	219.37	0.90	0.05
Main Ditch	M1-M2	43	03+00	1433	206.98	219.37	213.54	219.37	0.88	0.05
Main Ditch	M1-M2	42	04+00	1433	206.76	219.37		219.37	0.84	0.05
Main Ditch	M1-M2	41	05+00	1433	206.54	219.36	212.99	219.37	0.88	0.05
Main Ditch	M1-M2	40	06+00	1433	206.32	219.36	212.32	219.37	1.05	0.06
Main Ditch	M1-M2	39	07+00	1433	206.11	219.36	212.09	219.37	0.94	0.05
Main Ditch	M1-M2	38	08+00	1433	205.89	219.36	211.83	219.37	0.90	0.05
Main Ditch	M2-M3	37	09+00	1433	205.67	219.36	211.87	219.37	0.92	0.05
Main Ditch	M2-M3	36	10+00	2546	205.45	219.35	213.59	219.37	1.61	0.09
Main Ditch	M2-M3	35	11+00	2546	205.24	219.35	213.31	219.36	1.55	0.09
Main Ditch	M2-M3	34	12+00	2546	205.02	219.35	213.03	219.36	1.53	0.09
Main Ditch	M2-M3	33	13+00	2546	204.80	219.34	212.28	219.36	1.55	0.08
Main Ditch	M2-M3	32	14+00	2546	204.58	219.34	212.02	219.36	1.43	0.08
Main Ditch	M2-M3	31	15+00	2546	204.37	219.34	211.75	219.36	1.46	0.08
Main Ditch	M2-M3	30	16+00	2546	204.15	219.34	211.49	219.36	1.50	0.08
Main Ditch	M2-M3	29	17+00	2546	203.93	219.33	211.22	219.35	1.71	0.09
Main Ditch	M2-M3	28	18+00	2546	203.71	219.33	210.96	219.35	1.63	0.08
Main Ditch	M3-M8	27	19+00	2546	203.50	219.33	210.69	219.35	1.61	0.08
Main Ditch	M3-M8	26	20+00	6291	203.28	219.26		219.34	3.38	0.17
Main Ditch	M3-M8	25	21+00	6291	203.06	219.19		219.33	4.03	0.21
Main Ditch	M3-M8	24	22+00	6367	202.84	218.90		219.29	5.97	0.32
Main Ditch	M3-M8	23	23+00	6367	202.63	218.84		219.27	6.14	0.33
Main Ditch	M3-M8	22	24+00	6367	202.41	218.42		219.21	7.60	0.42
Main Ditch	M3-M8	21	25+00	6367	202.19	217.94	213.62	219.13	8.80	0.50
Main Ditch	M3-M8	20	26+00	6367	201.97	217.92		219.08	8.67	0.49
Main Ditch	M3-M8	19	27+00	6835	201.88	217.59		219.01	9.57	0.55
Main Ditch	M3-M8	18	28+00	6835	201.54	217.61		218.93	9.21	0.53
Main Ditch	M3-M8	17	29+00	6835	201.32	217.60		218.86	9.01	0.51
Main Ditch	M3-M8	16	30+00	6835	201.00	217.67		218.78	8.52	0.47
Main Ditch	M3-M8	15	31+00	6835	200.89	217.72		218.71	8.15	0.44
Main Ditch	M3-M8	14	32+00	6835	200.67	217.80		218.63	7.60	0.41
Main Ditch	M3-M8	13	33+00	8463	200.45	216.97		218.51	10.26	0.57
Main Ditch	M3-M8	12	34+00	8463	200.23	216.54	213.37	218.42	11.04	0.63
Main Ditch	M3-M8	11	35+00	8463	200.02	216.57		218.31	10.67	0.60
Main Ditch	M3-M8	10	36+00	8463	199.80	216.54		218.23	10.51	0.59
Main Ditch	M3-M8	9	37+00	8463	199.58	216.58		218.14	10.14	0.56
Main Ditch	M3-M8	8	38+00	9919	199.36	213.50	213.50	217.77	16.58	1.00
Main Ditch	M3-M8	7	39+00	9919	198.68	211.54	213.15	217.39	19.41	1.22
Main Ditch	M3-M8	6	40+00	9919	198.00	209.75	211.96	216.92	21.71	1.49
Main Ditch	M3-M8	5	41+00	9919	196.51	207.34	210.13	216.27	24.44	1.66
Main Ditch	M3-M8	4	42+00	9919	192.00	198.94	202.49	214.63	36.28	3.15
Main Ditch	M3-M8	3	43+00	9919	183.22	189.47	193.41	211.29	41.92	3.90
Main Ditch	M3-M8	2	44+00	9919	172.00	179.37	179.37	181.90	17.26	1.24
Main Ditch	M3-M9	1	45+00	11021	161.21	167.41	170.79	180.33	30.67	2.39

Table 2.4-207
Summary of HEC-RAS output for PMP Profile
(Sheet 2 of 3)

HEC-RAS identification scheme			Section	Q Total	Min Ch El	W.S. Elev	Crit W.S.	E.G. Elev	Vel Chnl	Froude #
Channel	Reach	Station	stationing	(cfs)	(ft)	(ft)	(ft)	(ft)	(ft/s)	Chl
Feeder Ditch 3	1	83	83+00	568	211.70	219.42	214.83	219.42	0.37	0.02
Feeder Ditch 3	1	82	82+00	1136	211.20	219.41		219.42	0.75	0.05
Feeder Ditch 3	1	81.9	81+90	1136	211.15	219.41	215.22	219.42	0.74	0.05
Feeder Ditch 3	1	81.75	81+75	Inl Struct						
Feeder Ditch 3	1	81.6	81+60	1136	211.00	219.40		219.41	0.70	0.05
Feeder Ditch 3	1	81	81+00	1705	210.70	219.39		219.40	1.54	0.10
Feeder Ditch 3	1	80	80+00	2273	210.20	219.38		219.40	1.98	0.12
Feeder Ditch 3	1	79	79+00	2841	209.70	219.36		219.40	2.53	0.16
Feeder Ditch 3	1	78	78+00	3409	209.20	219.34		219.39	3.05	0.19
Feeder Ditch 3	1	77	77+00	3978	208.70	219.31		219.38	3.46	0.21
Feeder Ditch 3	1	76	76+00	4172	208.20	219.32		219.37	2.99	0.18
Feeder Ditch 3	1	75	75+00	4366	207.70	219.32		219.37	2.90	0.17
Feeder Ditch 3	1	74	74+00	4561	207.20	219.30		219.36	3.11	0.18
Feeder Ditch 3	1	73	73+00	4755	206.70	219.29		219.35	3.23	0.19
Feeder Ditch 3	1	72	72+00	4949	206.20	219.28		219.35	3.34	0.19
Feeder Ditch 3	1	71	71+00	5144	205.70	219.26		219.34	3.44	0.19
Feeder Ditch 2	1	83	83+00	62	214.26	219.40	214.99	219.40	0.05	0.00
Feeder Ditch 2	1	82	82+00	124	212.76	219.40		219.40	0.12	0.01
Feeder Ditch 2	1	81.95	81+95	124	212.74	219.40	214.85	219.40	0.11	0.01
Feeder Ditch 2	1	81.65	81+65	Inl Struct						
Feeder Ditch 2	1	81.35	81+35	124	212.44	219.39		219.39	0.10	0.01
Feeder Ditch 2	1	81	81+00	186	212.26	219.39		219.39	0.17	0.01
Feeder Ditch 2	1	80.65	80+65	186	212.06	219.39	214.65	219.39	0.16	0.01
Feeder Ditch 2	1	80.3	80+30	Inl Struct						
Feeder Ditch 2	1	80	80+00	249	211.76	219.39		219.39	0.24	0.02
Feeder Ditch 2	1	79.95	79+95	249	211.74	219.39		219.39	0.24	0.02
Feeder Ditch 2	1	79	79+00	311	211.26	219.39		219.39	0.29	0.02
Feeder Ditch 2	1	78.45	78+45	311	210.98	219.39	213.92	219.39	0.26	0.02
Feeder Ditch 2	1	78.2	78+20	Inl Struct						
Feeder Ditch 2	1	78	78+00	373	210.76	219.38		219.38	0.35	0.02
Feeder Ditch 2	1	77.95	77+95	373	210.74	219.38		219.38	0.34	0.02
Feeder Ditch 2	1	77	77+00	435	210.26	219.38		219.38	0.46	0.03
Feeder Ditch 2	1	76	76+00	535	209.76	219.38		219.38	0.78	0.05
Feeder Ditch 2	1	75	75+00	634	209.26	219.38		219.38	0.64	0.04
Feeder Ditch 2	1	74.95	74+95	634	209.24	219.38	213.35	219.38	0.63	0.04
Feeder Ditch 2	1	74.7	74+70	Inl Struct						
Feeder Ditch 2	1	74.45	74+45	634	208.99	219.37		219.37	0.59	0.04
Feeder Ditch 2	1	74.15	74+15	734	208.33	219.37	212.75	219.37	0.57	0.04
Feeder Ditch 2	1	74.1	74+10	Inl Struct						
Feeder Ditch 2	1	73.35	73+35	734	208.43	219.36		219.37	0.72	0.05
Feeder Ditch 2	1	73	73+00	834	208.26	219.36		219.37	0.77	0.05
Feeder Ditch 2	1	72	72+00	933	207.76	219.36		219.37	0.84	0.05
Feeder Ditch 2	1	71	71+00	1033	207.26	219.36		219.37	0.92	0.06
Feeder Ditch 1	1	83	83+00	103	216.00	219.45	216.65	219.45	0.18	0.02
Feeder Ditch 1	1	82	82+00	206	215.70	219.45	216.85	219.45	0.37	0.03

VEGP COL 2.4-2

Table 2.4-207
Summary of HEC-RAS output for PMP Profile
(Sheet 3 of 3)

HEC-RAS identification scheme			Section stationing	Q Total	Min Ch El	W.S. Elev	Crit W.S.	E.G. Elev	Vel Chnl	Froude # Chl
Channel	Reach	Station		(cfs)	(ft)	(ft)	(ft)	(ft)	(ft/s)	
Feeder Ditch 1	1	81.9	81+90	206	215.65	219.45	216.81	219.45	0.36	0.03
Feeder Ditch 1	1	81.75	81+75	Inl Struct						
Feeder Ditch 1	1	81.6	81+60	206	215.50	219.44	216.67	219.44	0.35	0.03
Feeder Ditch 1	1	81	81+00	309	215.20	219.44	217.02	219.44	0.57	0.05
Feeder Ditch 1	1	80	80+00	413	214.70	219.44	217.15	219.44	0.78	0.07
Feeder Ditch 1	1	79	79+00	516	214.20	219.44	217.26	219.44	1.01	0.09
Feeder Ditch 1	1	78	78+00	619	213.70	219.43	217.35	219.44	1.26	0.10
Feeder Ditch 1	1	77	77+00	722	213.20	219.42	217.40	219.44	1.54	0.12
Feeder Ditch 1	1	76	76+00	843	212.70	219.41	217.43	219.43	1.82	0.14
Feeder Ditch 1	1	75.1	75+10	843	212.25	219.41	217.30	219.43	1.68	0.13
Feeder Ditch 1	1	75	75+00	964	212.20	219.41	217.41	219.43	1.88	0.14
Feeder Ditch 1	1	74.85	74+85	Inl Struct						
Feeder Ditch 1	1	74.7	74+70	964	212.05	219.40	217.26	219.42	1.76	0.13
Feeder Ditch 1	1	74	74+00	1085	211.70	219.36	217.38	219.41	2.44	0.18
Feeder Ditch 1	1	73	73+00	1205	211.20	219.36	217.29	219.40	2.34	0.17
Feeder Ditch 1	1	72	72+00	1326	210.70	219.35	217.13	219.40	2.52	0.18
Feeder Ditch 1	1	71	71+00	1447	210.20	219.33	216.22	219.39	2.69	0.19

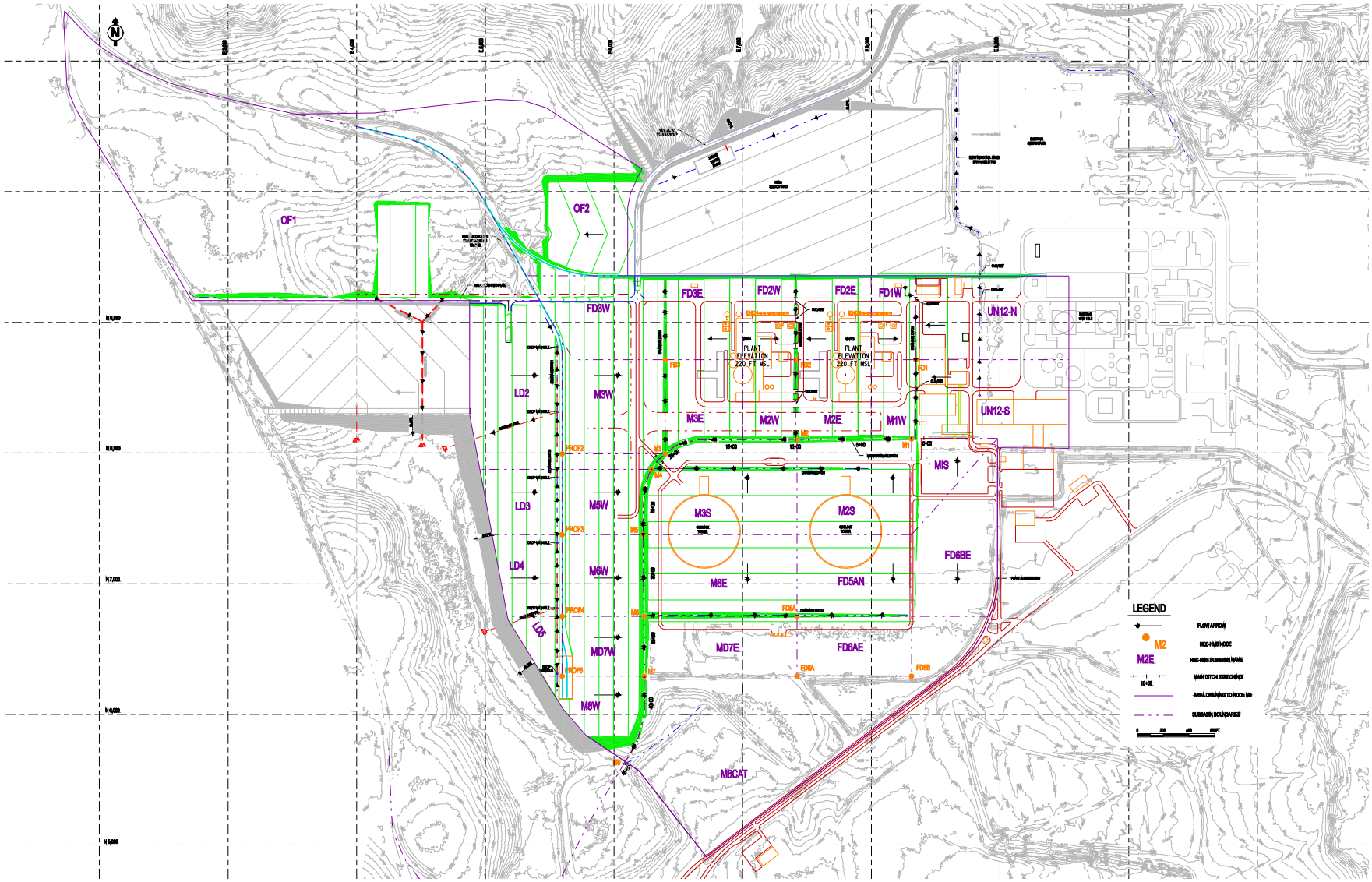

VEGP COL 2.4-2

Figure 2.4-201
Site Plan with PMP Drainage Boundaries and Flow Paths

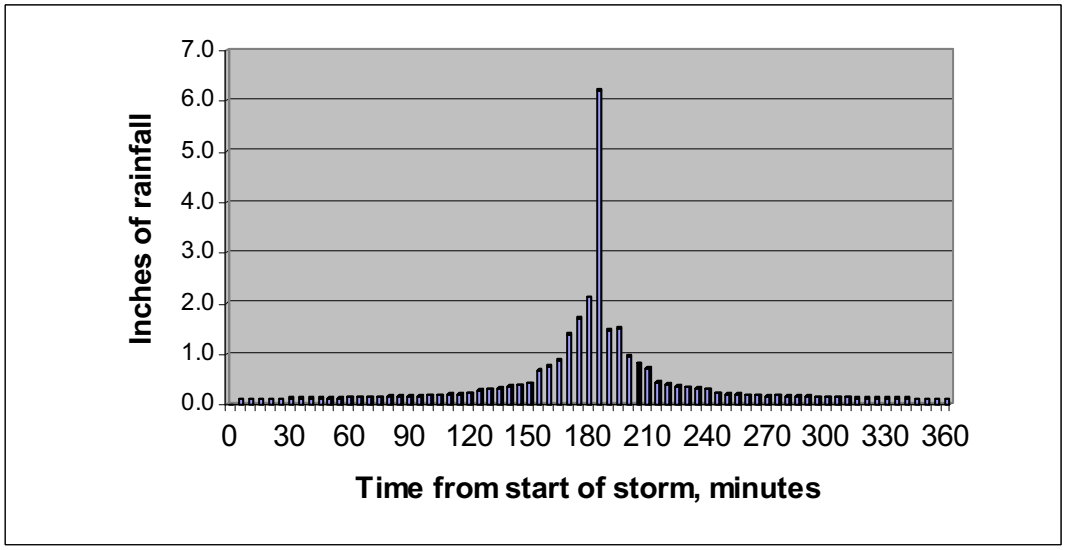

VEGP COL 2.4-2

Figure 2.4-202
PMP Hyetograph Determined in Frequency Storm Module of HEC-HMS

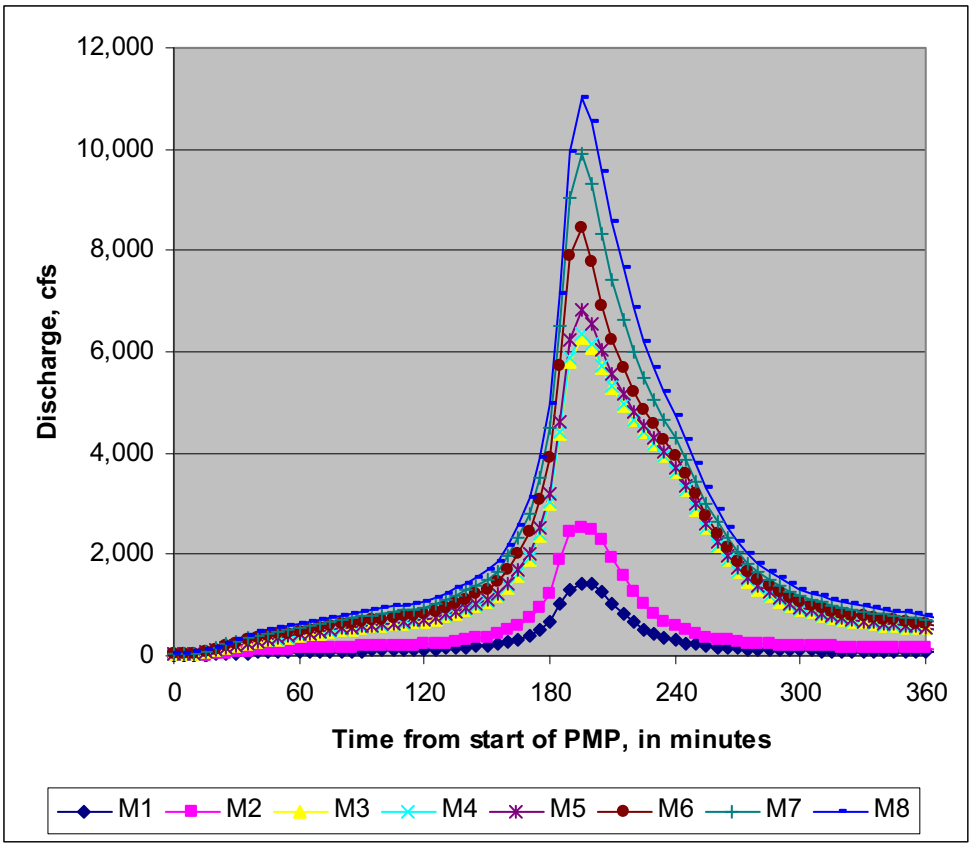

VEGP COL 2.4-2

Figure 2.4-203
HEC-HMS PMP Runoff Hydrographs at Points along Main Ditch

2.5 GEOLOGY, SEISMOLOGY, AND GEOTECHNICAL ENGINEERING

This section of the referenced DCD is incorporated by reference with the following departures and/or supplements.

This section of the referenced ESPA SSAR is incorporated by reference with no variances and/or supplements.

VEGP DEP 1.1-1 This section is numbered in accordance with the referenced ESPA SSAR. The COL Information Items in DCD Subsections 2.5.1 through 2.5.6 are addressed in Subsection 2.5.7.

VEGP DEP 1.1-1

2.5.7 COMBINED LICENSE INFORMATION

2.5.7.1 Basic Geologic and Seismic Information

VEGP COL 2.5-1 This COL item is addressed in ESPA SSAR Subsections 2.5.1, 2.5.2, and 2.5.4.

2.5.7.2 Site Seismic and Tectonic Characteristics Information

VEGP COL 2.5-2 This COL item is addressed in ESPA SSAR Subsections 2.5.2 and 2.5.4.

2.5.7.3 Geoscience Parameters

VEGP COL 2.5-3 This COL item is addressed in ESPA SSAR Subsections 2.5.2 and 2.5.4.

2.5.7.4 Surface Faulting

VEGP COL 2.5-4 This COL item is addressed in ESPA SSAR Subsection 2.5.3.

2.5.7.5 Site and Structures

VEGP COL 2.5-5 This COL item is addressed in ESPA SSAR Subsection 2.5.4.

2.5.7.6 Properties of Underlying Materials

VEGP COL 2.5-6 This COL item is addressed in ESPA SSAR Subsection 2.5.4.

2.5.7.7 Excavation and Backfill

VEGP COL 2.5-7 This COL item is addressed in ESPA SSAR Subsection 2.5.4.

2.5.7.8 Groundwater Conditions

VEGP COL 2.5-8 This COL item is addressed in ESPA SSAR Subsection 2.5.4.

2.5.7.9 Liquefaction Potential

VEGP COL 2.5-9 This COL item is addressed in ESPA SSAR Subsection 2.5.4.

2.5.7.10 Bearing Capacity

VEGP COL 2.5-10 This COL item is addressed in ESPA SSAR Subsection 2.5.4.

2.5.7.11 Earth Pressures

VEGP COL 2.5-11 This COL item is addressed in ESPA SSAR Subsection 2.5.4.

2.5.7.12 Static and Dynamic Stability of Facilities

VEGP COL 2.5-12 This COL item is addressed in ESPA SSAR Subsection 2.5.4.

2.5.7.13 Subsurface Instrumentation

VEGP COL 2.5-13 This COL item is addressed in ESPA SSAR Subsection 2.5.4.

2.5.7.14 Stability of Slopes

VEGP COL 2.5-14 This COL item is addressed in ESPA SSAR Subsection 2.5.5.

2.5.7.15 Embankments and Dams

VEGP COL 2.5-15 This COL item is addressed in ESPA SSAR Subsection 2.5.6.

2.5.7.16 Settlement of Nuclear Island

VEGP COL 2.5-16 This COL item is addressed in ESPA SSAR Subsection 2.5.4.

CHAPTER 3

DESIGN OF STRUCTURES, COMPONENTS, EQUIPMENT AND SYSTEMS

TABLE OF CONTENTS

Section	Title	Page
3.1	CONFORMANCE WITH NUCLEAR REGULATORY COMMISSION GENERAL DESIGN CRITERIA	3.1-1
3.2	CLASSIFICATION OF STRUCTURES, COMPONENTS, AND SYSTEMS	3.2-1
3.2.1	SEISMIC CLASSIFICATION	3.2-1
3.2.2	AP1000 CLASSIFICATION SYSTEM	3.2-1
3.3	WIND AND TORNADO LOADINGS	3.3-1
3.3.1.1	Design Wind Velocity	3.3-1
3.3.2.1	Applicable Design Parameters	3.3-1
3.3.2.3	Effect of Failure of Structures or Components Not Designed for Tornado Loads	3.3-1
3.3.3	COMBINED LICENSE INFORMATION	3.3-2
3.4	WATER LEVEL (FLOOD) DESIGN	3.4-1
3.4.1.1.1	Protection from External Flooding	3.4-1
3.4.1.3	Permanent Dewatering System	3.4-1
3.4.3	COMBINED LICENSE INFORMATION	3.4-1
3.5	MISSILE PROTECTION	3.5-1
3.5.1.3	Turbine Missiles	3.5-1
3.5.1.5	Missiles Generated by Events Near the Site	3.5-1
3.5.1.6	Aircraft Hazards	3.5-2
3.5.4	COMBINED LICENSE INFORMATION	3.5-2
3.6	PROTECTION AGAINST THE DYNAMIC EFFECTS ASSOCIATED WITH THE POSTULATED RUPTURE OF PIPING	3.6-1
3.6.4.1	Pipe Break Hazard Analysis	3.6-1
3.6.4.4	Primary System Inspection Program for Leak-before-Break Piping	3.6-1
3.7	SEISMIC DESIGN	3.7-1

TABLE OF CONTENTS (Continued)

Section	Title	Page
3.7.1.1.1	Design Ground Motion Response Spectra	3.7-1
3.7.2.8.1	Annex Building	3.7-2
3.7.2.12	Methods for Seismic Analysis of Dams	3.7-2
3.7.4.1	Comparison with Regulatory Guide 1.12	3.7-2
3.7.4.2.1	Triaxial Acceleration Sensors	3.7-2
3.7.4.4	Comparison of Measured and Predicted Responses	3.7-3
3.7.4.5	Tests and Inspections	3.7-3
3.7.5	COMBINED LICENSE INFORMATION	3.7-3
3.7.5.1	Seismic Analysis of Dams	3.7-3
3.7.5.2	Post-Earthquake Procedures	3.7-4
3.7.5.3	Seismic Interaction Review	3.7-4
3.7.5.4	Reconciliation of Seismic Analyses of Nuclear Island Structures	3.7-4
3.7.5.5	Free Field Acceleration Sensor	3.7-4
3.8	DESIGN OF CATEGORY I STRUCTURES	3.8-1
3.8.4.3	Loads and Load Combinations	3.8-1
3.8.5.1	Description of the Foundations	3.8-1
3.9	MECHANICAL SYSTEMS AND COMPONENTS	3.9-1
3.9.3.1.2	Loads for Class 1 Components, Core Support, and Component Supports	3.9-1
3.9.3.4.4	Inspection, Testing, Repair and/or Replacement of Snubbers	3.9-2
3.9.6	INSERVICE TESTING OF PUMPS AND VALVES	3.9-4
3.9.6.2.2	Valve Testing	3.9-5
3.9.6.2.4	Valve Preservice Tests	3.9-7
3.9.6.2.5	Valve Replacement, Repair, and Maintenance	3.9-7
3.9.6.3	Relief Requests	3.9-7
3.9.8	COMBINED LICENSE INFORMATION	3.9-8
3.9.8.2	Design Specifications and Reports	3.9-8
3.9.8.3	Snubber Operability Testing	3.9-8
3.9.8.4	Valve Inservice Testing	3.9-8
3.9.8.5	Surge Line Thermal Monitoring	3.9-8
3.9.9	REFERENCES	3.9-9
3.10	SEISMIC AND DYNAMIC QUALIFICATION OF SEISMIC CATEGORY I MECHANICAL AND ELECTRICAL EQUIPMENT	3.10-1
3.11	ENVIRONMENTAL QUALIFICATION OF MECHANICAL AND ELECTRICAL EQUIPMENT	3.11-1

TABLE OF CONTENTS (Continued)

Section	Title	Page
3.11.5	COMBINED LICENSE INFORMATION ITEM FOR EQUIPMENT QUALIFICATION FILE	3.11-1
APP. 3A	HVAC DUCTS AND DUCT SUPPORTS	3A-1
APP. 3B	LEAK-BEFORE-BREAK EVALUATION OF THE AP1000 PIPING	3B-1
APP. 3C	REACTOR COOLANT LOOP ANALYSIS METHODS	3C-1
APP. 3D	METHODOLOGY FOR QUALIFYING AP1000 SAFETY-RELATED ELECTRICAL AND MECHANICAL EQUIPMENT	3D-1
APP. 3E	HIGH-ENERGY PIPING IN THE NUCLEAR ISLAND	3E-1
APP. 3F	CABLE TRAYS AND CABLE TRAY SUPPORTS	3F-1
APP. 3G	NUCLEAR ISLAND SEISMIC ANALYSES	3G-1
APP. 3H	AUXILIARY AND SHIELD BUILDING CRITICAL SECTIONS	3H-1
APP. 3I	EVALUATION FOR HIGH FREQUENCY SEISMIC INPUT	3I-1

LIST OF TABLES

Number	Title
3.2-201	Seismic Classification of Building Structures

LIST OF FIGURES

Number	Title
3.7-201	VEGP AP1000 Horizontal Spectra Comparison
3.7-202	VEGP AP1000 Vertical Spectra Comparison

CHAPTER 3

DESIGN OF STRUCTURES, COMPONENTS, EQUIPMENT AND SYSTEMS

3.1 CONFORMANCE WITH NUCLEAR REGULATORY COMMISSION GENERAL DESIGN CRITERIA

This section of the referenced DCD is incorporated by reference with no departures or supplements.

3.2 CLASSIFICATION OF STRUCTURES, COMPONENTS, AND SYSTEMS

This section of the referenced DCD is incorporated by reference with the following departures and/or supplements.

3.2.1 SEISMIC CLASSIFICATION

Add the following text to the end of DCD Subsection 3.2.1.

VEGP SUP 3.2-1 There are no safety-related structures, systems, or components outside the scope of the DCD, except for engineered fill which is classified as a Seismic Category I, safety-related structure. See Table 3.2-201. Refer to ESPA SSAR Subsection 2.5.4 for a discussion of safety-related backfill.

3.2.2 AP1000 CLASSIFICATION SYSTEM

Add the following text to the end of DCD Subsection 3.2.2.

VEGP SUP 3.2-1 There are no safety-related structures, systems, or components outside the scope of the DCD, except for engineered fill which is classified as a Seismic Category I, safety-related structure. See Table 3.2-201. Refer to ESPA SSAR Subsection 2.5.4 for a discussion of safety-related backfill.

Table 3.2-201
Seismic Classification of Building Structures

Structure	Category
Safety-Related Backfill	C-I

C-I: Seismic Category I

3.3 WIND AND TORNADO LOADINGS

This section of the referenced DCD is incorporated by reference with the following departures and/or supplements.

3.3.1.1 Design Wind Velocity

Add the following text to the end of DCD Subsection 3.3.1.1.

VEGP COL 3.3-1 The wind velocity characteristics for the Vogtle Electric Generating Plant, Units 3 and 4 (VEGP), are given in ESPA SSAR Subsection 2.3.1.3.1. Per ASCE 7-95 and the topography of the VEGP site per ESPA SSAR Figure 2.5.1-32, Site Topographic Map, the topographical factor for wind design is 1.00. Also, per ASCE 7-95, the importance factor is 1.15. These values are bounded by the design wind velocity values given in DCD Subsection 3.3.1.1 for the AP1000 plant.

3.3.2.1 Applicable Design Parameters

Add the following text to the end of DCD Subsection 3.3.2.1.

VEGP COL 3.3-1 The tornado characteristics for the VEGP are given in ESPA SSAR Subsection 2.3.1.3.2. These values are bounded by the tornado design parameters given in DCD Subsection 3.3.2.1 for the AP1000 plant.

3.3.2.3 Effect of Failure of Structures or Components Not Designed for Tornado Loads

---

Add the following text to the end of DCD Subsection 3.3.2.3.

VEGP COL 3.3-1 Consideration of the effects of wind and tornado due to failures in an adjacent AP1000 plant and VEGP Units 1 and 2 are bounded by the evaluation of the buildings and structures in a single unit.

3.3.3 COMBINED LICENSE INFORMATION

Add the following text to the end of DCD Subsection 3.3.3.

VEGP COL 3.3-1 The VEGP site satisfies the site interface criteria for wind and tornado (see Subsections 3.3.1.1, 3.3.2.1 and 3.3.2.3) and will not have a tornado-initiated failure of structures and components within the applicant's scope that compromises the safety of AP1000 safety-related structures and components (see also Subsection 3.5.4).

3.4 WATER LEVEL (FLOOD) DESIGN

This section of the referenced DCD is incorporated by reference with the following departures and/or supplements.

3.4.1.1.1 Protection from External Flooding

Replace the thirteenth paragraph of DCD Subsection 3.4.1.1.1 with the following text:

VEGP DEP 3.4-1

An alternate waterproofing approach has been developed for Units 3 and 4. This waterproofing system is addressed in ESPA SSAR Subsections 2.5.4.5 , 2.5.4.5.7, and 3.8.5 and is shown in ESPA SSAR Figure 2.5.4-17.

3.4.1.3 Permanent Dewatering System

Add the following text to the end of DCD Subsection 3.4.1.3.

VEGP COL 3.4-1

No permanent dewatering system is required because site groundwater levels are two feet or more below site grade level as described in ESPA SSAR Subsection 2.4.12.

3.4.3 COMBINED LICENSE INFORMATION

Replace the first paragraph of DCD Subsection 3.4.3 with the following text.

VEGP COL 3.4-1

The site-specific water levels given in Subsection 3.4.1.3 and ESPA SSAR Subsection 2.4 satisfy the interface requirements identified in DCD Section 2.4.

3.5 MISSILE PROTECTION

This section of the referenced DCD is incorporated by reference with the following departures and/or supplements.

3.5.1.3 Turbine Missiles

Add the following text to the end of DCD Subsection 3.5.1.3.

STD SUP 3.5-1 The potential for a turbine missile from another AP1000 plant in close proximity has been considered. As noted in DCD Subsection 10.2.2, the probability of generation of a turbine missile is less than 1×10^{-5} per year. Given this generation probability and the protection provided by the reinforced concrete shield building and auxiliary building walls, roofs, and floors, the guidance of Regulatory Guide 1.115 is satisfied for two AP1000 plants side by side.

VEGP SUP 3.5-1 The orientation of the Units 1 and 2 turbines has been evaluated and Vogtle Units 3 and 4 are located outside of the low trajectory strike zones as described in Regulatory Guide 1.115. Therefore, there is no potential for a turbine missile from Units 1 and 2 to impact Units 3 and 4.

STD SUP 3.5-2 The turbine system maintenance and inspection program is discussed in Subsection 10.2.3.6.

3.5.1.5 Missiles Generated by Events Near the Site

Add the following text to the end of DCD Subsection 3.5.1.5.

VEGP COL 3.5-1 The primary access point, administrative building, communications support center, warehouse and shops, engineering and administrative building, maintenance support building and miscellaneous structures are common structures that are located at a nuclear power plant. They are of similar design and construction to those that are typical at nuclear power plants. Therefore, any missiles resulting from a tornado-initiated failure are not more energetic than tornado missiles postulated for design of the AP1000. Additionally, there are no other structures adjacent to the nuclear island other than the turbine building, annex building, radwaste building and passive containment cooling ancillary water storage tank.

In accordance with ESPA SSAR Subsection 2.2.3, the effects of explosions have been evaluated and it has been determined that the overpressure criteria of Regulatory Guide 1.91 is not exceeded. Consistent with Regulatory Guide 1.91, the effects of blast-generated missiles will be less than those associated with the blast overpressure levels considered; therefore, no further evaluation of blast-generated missiles is required.

3.5.1.6 Aircraft Hazards

This section of the referenced ESPA SSAR is incorporated by reference with no variances or supplements.

3.5.4 COMBINED LICENSE INFORMATION

VEGP COL 3.5-1 This COL Item is addressed in Subsection 3.5.1.5 and ESPA SSAR Subsection 3.5.1.6.

3.6 PROTECTION AGAINST THE DYNAMIC EFFECTS ASSOCIATED WITH THE POSTULATED RUPTURE OF PIPING

This section of the referenced DCD is incorporated by reference with the following departures and/or supplements.

3.6.4.1 Pipe Break Hazard Analysis

Replace the last paragraph in DCD Subsection 3.6.4.1 with the following text.

STD COL 3.6-1 The pipe whip restraint design and an as-designed pipe break hazards analysis will be completed in accordance with the criteria outlined in DCD Subsections 3.6.1.3.2 and 3.6.2.5. The as-designed pipe rupture hazard analysis including break locations based on as-designed pipe analysis will be documented in an as-designed Pipe Rupture Hazards Analysis Report. The design, analysis and the report will be completed prior to fuel load.

A pipe rupture hazard analysis is part of the piping design. It is used to identify postulated break locations and layout changes, support design, whip restraint design, and jet shield design. The final design for these activities will be completed prior to fabrication and installation of the piping and connected components. The as-built reconciliation of the pipe break hazards analysis in accordance with the criteria outlined in DCD Subsections 3.6.1.3.2 and 3.6.2.5 will be completed prior to fuel load.

3.6.4.4 Primary System Inspection Program for Leak-before-Break Piping

---

Replace the first paragraph of DCD Subsection 3.6.4.4 with the following text.

STD COL 3.6-4 Alloy 690 is not used in leak-before-break piping. No additional or augmented inspections are required beyond the inservice inspection program for leak-before-break piping. An as-built verification of the leak-before-break piping is required to verify that no change was introduced that would invalidate the conclusion reached in this subsection.

3.7 SEISMIC DESIGN

This section of the referenced DCD is incorporated by reference with the following departures and/or supplements.

Add Subsection 3.7.1.1.1 as follows:

VEGP SUP 3.7-3

3.7.1.1.1 Design Ground Motion Response Spectra

The Vogtle site-specific safe shutdown earthquake (SSE) design response spectra (DRS) are the site-specific ground motion response spectra (GMRS) determined in ESPA SSAR Subsection 2.5.2.6. These response spectra are determined in the free-field on the ground surface.

The Vogtle foundation input response spectra (FIRS) are at an outcrop located at the 40' depth. The development of these FIRS is discussed in ESPA SSAR Subsection 2.5.2.7. These Vogtle response spectra are compared to the AP1000 SSE design response spectra that are also referred to as the AP1000 certified seismic design response spectra (CSDRS). The CSDRS also represents the AP1000 FIRS. This is because: (1) the CSDRS at a hard rock site is essentially the same at grade and at foundation; and (2) the CSDRS envelopes the in-column motions of the other generic soil conditions. The AP1000 CSDRS are applied at the foundation level in the free field at hard rock sites, and at the finished grade for the other soil generic conditions. The comparisons are shown in in Figures 3.7-201 and 3.7-202. As seen from this comparison there are exceedances above the CSDRS; therefore, a plant specific seismic evaluation is performed to demonstrate that the AP1000 plant designed for the CSDRS is acceptable for the Vogtle site. The results from the Vogtle site specific seismic evaluation that demonstrates the acceptability of the Vogtle site is given in ESPA SSAR Appendix 2.5E. Based on this Vogtle site specific seismic evaluation it can also be concluded that the standard AP1000 plant certified design is fully acceptable to a SSE design response spectra level of the CSDRS at Vogtle's plant grade.

The operating basis earthquake ground motion (OBE) spectral values are used as one measure of potential damage to those structures, systems, and components designed to the SSE design ground motion to determine the severity of the seismic event and make a determination of whether the plant must be shut down. For the AP1000 certified design, OBE is not an explicit design load; as such it is therefore defined as one-third the CSDRS. Since it has been demonstrated that the Vogtle site characteristics do not limit the AP1000 design to the CSDRS, the Vogtle OBE for the AP1000 is defined as one-third the AP1000 CSDRS.

The FIRS and the CSDRS in the horizontal direction in the free-field at the foundation of the AP1000 Nuclear Island exceed the minimum spectrum requirements of 10 CFR50 Appendix S.

3.7.2.8.1 Annex Building

Add the following text to the end of DCD Subsection 3.7.2.8.1.

STD SUP 3.7-4 The annex building is designed so that it will not collapse and damage the safety related auxiliary building and shield building.

3.7.2.12 Methods for Seismic Analysis of Dams

Add the following text to the end of DCD Subsection 3.7.2.12.

VEGP COL 3.7-1 The evaluation of existing dams whose failure could affect the site interface flood level specified in DCD Subsection 2.4.1.2, is included in ESPA SSAR Subsection 2.4.4. As discussed in ESPA SSAR Subsection 2.4.1.2.4, the U.S. Army Corps of Engineers has no current plans for the construction of additional reservoirs on the Savannah River.

3.7.4.1 Comparison with Regulatory Guide 1.12

Add the following text to the end of DCD Subsection 3.7.4.1.

STD SUP 3.7-1 Administrative procedures define the maintenance and repair of the seismic instrumentation to keep the maximum number of instruments in-service during plant operation and shutdown in accordance with Regulatory Guide 1.12.

3.7.4.2.1 Triaxial Acceleration Sensors

Add the following text to the end of DCD Subsection 3.7.4.2.1.

VEGP COL 3.7-5 A free-field sensor will be located and installed to record the ground surface motion representative of the site. To be representative of this site in regards to seismic response of structures, systems, and components, the free-field sensor is

located on the ground surface of the engineered backfill. The backfill directly supports the Nuclear Island and the adjacent structures and extends out from these structures a significant distance. The free-field sensor is located where the backfill vertically extends from the top of the Blue Bluff Marl to the ground surface, but horizontally at a distance where possible effects on recorded ground motion associated with surface features, buildings, and components would be minimized.

3.7.4.4 Comparison of Measured and Predicted Responses

Add the following text to the end of DCD Subsection 3.7.4.4.

VEGP COL 3.7-2 Post-earthquake operating procedures utilize the guidance of EPRI Reports NP-5930, TR-100082, and NP-6695, as modified and endorsed by the NRC in Regulatory Guides 1.166 and 1.167. A response spectrum check up to 10Hz and the cumulative absolute velocity will be calculated based on the recorded motions at the free field instrument. If the operating basis earthquake ground motion is exceeded or significant plant damage occurs, the plant must be shutdown in an orderly manner.

3.7.4.5 Tests and Inspections

Add the following text to the end of DCD Subsection 3.7.4.5.

STD SUP 3.7-2 Installation and acceptance testing of the triaxial acceleration sensors described in DCD Subsection 3.7.4.2.1 is completed prior to initial startup. Installation and acceptance testing of the time-history analyzer described in DCD Subsection 3.7.4.2.2 is completed prior to initial startup.

3.7.5 COMBINED LICENSE INFORMATION

3.7.5.1 Seismic Analysis of Dams

VEGP COL 3.7-1 This COL Item is addressed in Subsection 3.7.2.12 and ESPA SSAR Subsection 2.4.4.

3.7.5.2 Post-Earthquake Procedures

STD COL 3.7-2 This COL Item is addressed in Subsection 3.7.4.4.

3.7.5.3 Seismic Interaction Review

Replace DCD Subsection 3.7.5.3 with the following text.

STD COL 3.7-3 The seismic interaction review will be updated for as-built information. This review is performed in parallel with the seismic margin evaluation. The review is based on as-procured data, as well as the as-constructed condition. The as-built seismic interaction review is completed prior to fuel load.

3.7.5.4 Reconciliation of Seismic Analyses of Nuclear Island Structures

Replace DCD Subsection 3.7.5.4 with the following text.

STD COL 3.7-4 The seismic analyses described in DCD Subsection 3.7.2 will be reconciled for detailed design changes, such as those due to as-procured or as-built changes in component mass, center of gravity, and support configuration based on as-procured equipment information. Deviations are acceptable based on an evaluation consistent with the methods and procedure of DCD Section 3.7 provided the amplitude of the seismic floor response spectra, including the effect due to these deviations, does not exceed the design basis floor response spectra by more than 10 percent. This reconciliation will be completed prior to fuel load.

3.7.5.5 Free Field Acceleration Sensor

VEGP COL 3.7-5 This COL Item is addressed in Subsection 3.7.4.2.1.

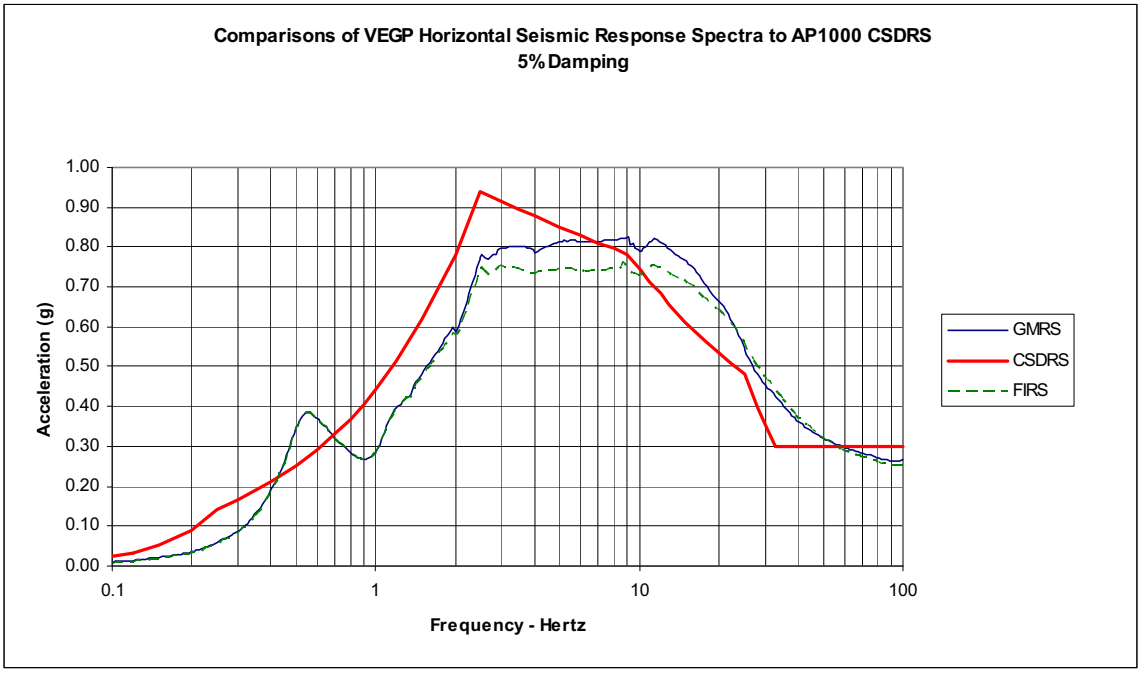

VEGP SUP 3.7-3

Figure 3.7-201
VEGP AP1000 Horizontal Spectra Comparison

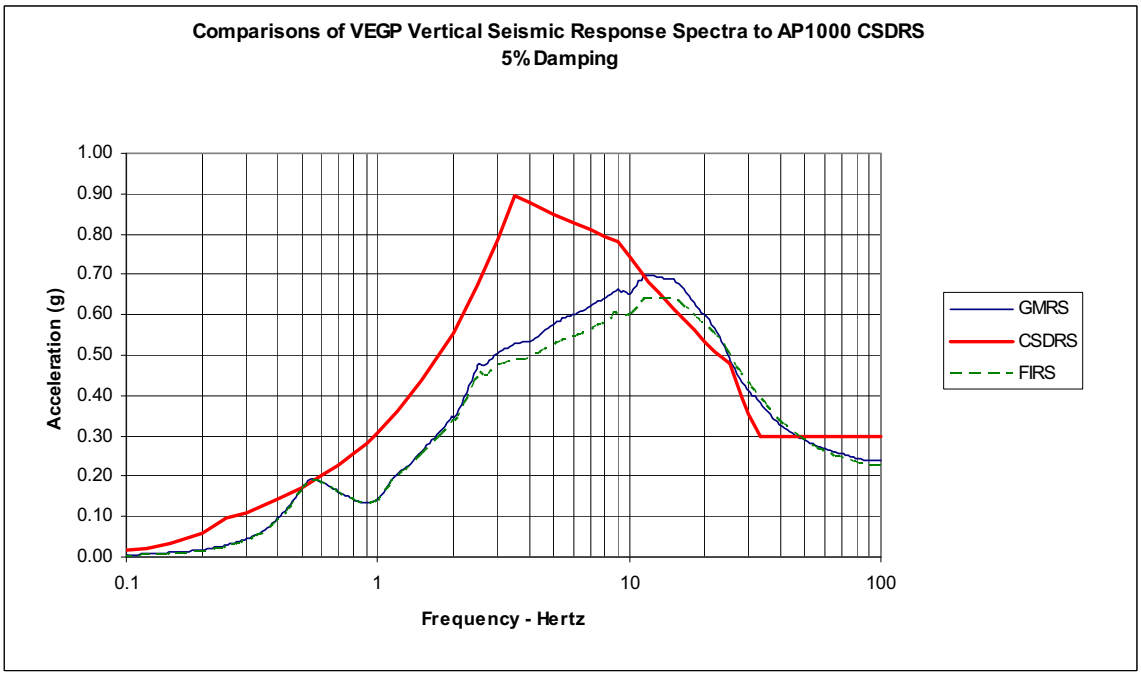

VEGP SUP 3.7-3

Figure 3.7-202
VEGP AP1000 Vertical Spectra Comparison

3.8 DESIGN OF CATEGORY I STRUCTURES

This section of the referenced DCD is incorporated by reference with the following departures and/or supplements.

3.8.4.3 Loads and Load Combinations

Add the following to the end of Subsection 3.8.4.3.1.3:

VEGP SUP 3.8-2 The application of the 48-hour PMWP and the 100-year return period ground-level snowpack in the roof design of safety-related structures is addressed in ESPA SSAR Subsection 2.3.1.3.4.

3.8.5.1 Description of the Foundations

Add the following text after paragraph one of DCD Subsection 3.8.5.1.

VEGP SUP 3.8-1 The depth of overburden and depth of embedment are given in ESPA SSAR Subsection 2.5.4.5.

VEGP SUP 3.8-3 A description of the safety-related backfill, which supports Category I structures, is given in ESPA SSAR Subsection 2.5.4.5.

VEGP ESP VAR 1.6-2 Subsection 3.8.5 of the referenced ESPA SSAR is incorporated by reference after the last paragraph of DCD Subsection 3.8.5.1 with the following variance:

The first two paragraphs of ESPA SSAR Subsection 3.8.5, which pertain to DCD Revision 15, are not incorporated by reference.

3.9 MECHANICAL SYSTEMS AND COMPONENTS

This section of the referenced DCD is incorporated by reference with the following departures and/or supplements.

3.9.3.1.2 Loads for Class 1 Components, Core Support, and Component Supports

---

STD COL 3.9-5 Add the following after the last paragraph under DCD subheading Request 3) and prior to DCD subheading Other Applications.

PRESSURIZER SURGE LINE MONITORING

General

The pressurizer surge line is monitored at the first AP1000 plant to record temperature distributions and thermal displacements of the surge line piping, as well as pertinent plant parameters. This monitoring occurs during the hot functional testing and first fuel cycle. The resulting monitoring data is evaluated to verify that the pressurizer surge line is within the bounds of the analytical temperature distributions and displacements. The pressurizer surge line monitoring activities include the following methodology and requirements:

Monitoring Method

The pressurizer surge line pipe wall is instrumented with outside mounted temperature and displacement sensors. The data from this instrumentation is supplemented by plant computer data from related process and control parameters.

Locations to be Monitored

In addition to the existing permanent plant temperature instrumentation, temperature and displacement monitoring will be included at critical locations on the surge line.

Data Evaluation

Data evaluation is performed at the completion of the monitoring period (one fuel cycle). The evaluation includes a comparison of the data evaluation results with the thermal profiles and transient loadings defined for the pressurizer surge line, accounting for expected pipe outside wall temperatures. Interim evaluations of the data are performed during the hot functional testing period, up to the start of normal power operation, and again once three months worth of normal operating

data has been collected, to identify any unexpected conditions in the pressurizer surge line.

3.9.3.4.4 Inspection, Testing, Repair and/or Replacement of Snubbers

---

Add the following text after the last paragraph of DCD Subsection 3.9.3.4.4:

STD COL 3.9-3 The program description of the inservice testing program in this section is based on the ASME OM Code 2001 Edition through 2003 Addenda. The initial inservice testing program incorporates the latest edition and addenda of the ASME OM Code approved in 10 CFR 50.55a(f) on the date 12 months before initial fuel load. Limitations and modifications set forth in 10 CFR 50.55a are incorporated.

a. Snubber Design and Testing

1. A list of snubbers on systems which experience sufficient thermal movement to measure cold to hot position is included as part of the testing program after the piping analysis has been completed.

2. The snubbers are tested to verify they can perform as required during the seismic events, and under anticipated operational transient loads or other mechanical loads associated with the design requirements for the plant. Production and qualification test programs for both hydraulic and mechanical snubbers are carried out by the snubber vendors in accordance with design specifications. Acceptance criteria for compliance with ASME Section III Subsection NF are cited, and applicable codes and standards are referenced. The following test requirements are included:

   - Snubbers are subjected to force or displacement versus time loading at frequencies within the range of significant modes of the piping system.

   - Dynamic cyclic load tests are conducted for hydraulic snubbers to determine the operational characteristics of the snubber control valve.

   - Displacements are measured to determine the performance characteristics specified.

   - Tests are conducted at various temperatures to verify operability over the specified range.

- Peak test loads in both tension and compression are equal to or higher than the rated load requirements.

- The snubbers are tested for various abnormal environmental conditions. Upon completion of the abnormal environmental transient test, the snubber is tested dynamically at a frequency within a specified frequency range. The snubber must operate normally during the dynamic test.

3. Safety-related components which utilize snubbers in their support systems are identified including the following:

   - identification of systems and components

   - number of snubbers utilized in each system and on that component

   - snubber type (s) – (hydraulic or mechanical)

   - constructed to ASME Code Section III, Subsection NF or other

   - snubber use such as shock, vibration, or dual purpose

   - those snubbers identified as dual purpose or vibration arrestor type, indication of fatigue strength evaluation for both snubber and component

b. Snubber Installation Requirements

Installation instructions contain instructions for storage, handling, erection, and adjustments (if necessary) of snubbers. Each snubber has an installation location drawing that contains the installation location of the snubber on the pipe and structure, the hot and cold settings, and additional information needed to install the particular snubber.

c. Snubber Preservice and Inservice Examination and Testing

The pre-service examination plan for applicable snubbers is prepared in accordance with the requirements of the ASME Code for Operation and Maintenance of Nuclear Power Plants (OM Code), Subsection ISTD, and the additional requirements of this Section. This examination is made after snubber installation but not more than 6 months prior to initial system preoperational testing. The pre-service examination verifies the following:

1. There are no visible signs of damage or impaired operational readiness as a result of storage, handling, or installation.

2. The snubber load rating, location, orientation, position setting, and configuration (attachments, extensions, etc.) are according to design drawings and specifications.

3. Snubbers are not seized, frozen or jammed.

4. Adequate swing clearance is provided to allow snubber movements.

5. If applicable, fluid is to the recommended level and is not to be leaking from the snubber system.

6. Structural connections such as pins, fasteners and other connecting hardware such as lock nuts, tabs, wire, cotter pins are installed correctly.

If the period between the initial pre-service examination and initial system preoperational tests exceeds 6 months, reexamination of Items 1, 4, and 5 is performed. Snubbers, which are installed incorrectly or otherwise fail to meet the above requirements, are repaired or replaced and re-examined in accordance with the above criteria.

The inservice examination and testing plan for applicable snubbers is prepared in accordance with the requirements of the ASME OM Code, Subsection ISTD. Snubber maintenance, repairs, replacements and modifications are performed in accordance with the requirements of the ASME OM Code, Subsection ISTD. Details of the inservice examination and testing program, including test schedules and frequencies, are reported in the inservice inspection and testing plan.

3.9.6 INSERVICE TESTING OF PUMPS AND VALVES

Revise the third sentence of the third paragraph of DCD Subsection 3.9.6, and add information between the third and fourth sentences as follows:

STD COL 3.9-4 The edition and addenda to be used for the inservice testing program are administratively controlled; the description of the inservice testing program in this section is based on the ASME OM Code 2001 Edition through 2003 Addenda. The initial inservice testing program incorporates the latest edition and addenda of the ASME OM Code approved in 10 CFR 50.55a(f) on the date 12 months before initial fuel load. Limitations and modifications set forth in 10 CFR 50.55a are incorporated.

Revise the fifth sentence of the sixth paragraph of DCD Subsection 3.9.6 as follows:

STD COL 3.9-4 Alternate means of performing these tests and inspections that provide equivalent demonstration may be developed in the inservice test program ~~as described in subsection 3.9.8~~.

Revise the first two sentences of the final paragraph of DCD Subsection 3.9.6 to read as follows:

STD COL 3.9-4 A preservice test program, which identifies the required functional testing, is to be submitted to the NRC prior to performing the tests and following the start of construction. The inservice test program, which identifies requirements for functional testing, is to be submitted to the NRC prior to the anticipated date of commercial operation as described above.

Add the following text after the last paragraph of DCD Subsection 3.9.6:

Table 13.4-201 provides milestones for preservice and inservice test program implementation.

3.9.6.2.2 Valve Testing

Add the following at the end of the last sentence of the paragraph containing the subheading "Power-Operated Valve Operability Tests" in DCD Subsection 3.9.6.2.2:

STD COL 3.9-4 , and for motor-operated valves the JOG MOV PV study and ASME Code Case OMN-1, Revision 1

Table 13.4-201 provides milestones for the MOV program implementation.

Revise the first sentence of the second paragraph under the paragraph with subheading "Power-Operated Valve Operability Tests" in DCD Subsection 3.9.6.2.2 to read as follows:

STD COL 3.9-4 Static and dynamic testing with diagnostic measurements will be performed on these valves as described below.

Insert the following as the last sentence in the paragraph under the bulleted item titled "Risk Ranking" in DCD Subsection 3.9.6.2.2:

STD COL 3.9-4 Guidance for this process is outlined in the JOG MOV PV Study, MPR-2524-A.

Insert the following text after the last paragraph under the sub-heading of "Power-Operated Valve Operability Tests" and before the sub-heading "Check Valve Tests" in DCD Subsection 3.9.6.2.2:

STD COL 3.9-4 **Active MOV Test Frequency Determination** - The ability of a valve to meet its design basis functional requirements (i.e. required capability) is verified during the valve's operability test. The required capability of the MOV is a calculated value. The preservice operability test measures the valve's actual actuator output capability, which is then compared to the valve's required capability. For an MOV, functional margin is that increment by which the MOV's actual capability exceeds the capability required to operate the MOV under design basis conditions. Using the valve functional margin and risk ranking, a periodic verification test interval/ frequency is determined. This determined test frequency is first compared to the valve's historical data to verify that any potential valve degradation during the test period would not reduce the functional margin to less than zero prior to the next scheduled periodic verification test. If the data shows that the functional margin may be reduced to less than zero, the frequency is reduced to perform the next periodic verification test prior to a loss of functional margin. If there is not sufficient data to determine whether there will be a loss of functional margin prior to the next periodic verification test, the test frequency is limited to not exceed two (2) refueling cycles or three (3) years, whichever is longer, for high risk safety significant components, and is limited to not exceed three (3) refueling cycles or five (5) years, whichever is longer, for low risk safety significant components.

A motor operated valve with an adequate functional margin is capable of opening and/or closing under design basis conditions.

Design Basis Verification Test - Prior to power operation a design basis verification (operability) test will be performed on each motor-operated valve so as to verify the capability of each valve to meet it's safety-related design requirements. The test is performed at conditions that are as close to design basis conditions as practicable.

Other Power-Operated Valve Operability Tests - Power-Operated valves other than active MOVs are exercised quarterly in accordance with ASME OM ISTC, unless justification is provided in the inservice testing program for testing these valves at other than Code mandated frequencies. Active and passive power-operated valves upon which operability testing may be performed are identified in DCD Table 3.9-16.

Add Subsections 3.9.6.2.4 and 3.9.6.2.5 following the last paragraph of DCD Subsection 3.9.6.2.3:

3.9.6.2.4 Valve Preservice Tests

STD COL 3.9-4 Preservice tests for valves are performed in accordance with ASME OM, ISTC-3100.

3.9.6.2.5 Valve Replacement, Repair, and Maintenance

STD COL 3.9-4 Testing in accordance with ASME OM, ISTC-3310 is performed after a valve is replaced, repaired, or undergoes maintenance.

3.9.6.3 Relief Requests

Insert the following text after the first paragraph in DCD Subsection 3.9.6.3:

STD COL 3.9-4 The IST Program described herein utilizes Code Case OMN-1, Revision 1, "Alternative Rules for the Preservice and Inservice Testing of Certain Electric Motor-Operated Valve Assemblies in Light Water Reactor Power Plants." Code Case OMN-1 establishes alternate rules and requirements for preservice and inservice testing to assess the operational readiness of certain motor operated valves in lieu of the requirements set forth in ASME OM Code Subsection ISTC. Implementation of the program described will require request for relief, unless Code Case OMN-1, Revision 1 is approved by the NRC in Regulatory Guide 1.192, or the case has been incorporated into the OM Code on which the IST program is based, and that code is approved in 10 CFR 50.55a(b).

Normal residual heat removal system containment penetration relief valve (RNS-V021) and containment isolation motor-operated valve (RNS-V023) are subjected to containment leak testing by pressurizing the lines in the reverse direction to the flow of a containment leak via this path. This test method requires a Relief Request in the IST Program.

DCD Table 3.9-16, Note 20 applies to the main steam isolation valves and main feedwater isolation valves (SGS-V040A/B, V057A/B). The valves are not full stroke tested quarterly at power since full valve stroking results in a plant transient during normal power operation. Therefore, these valves are full stroke tested on a cold shutdown frequency basis. The full stroke testing is a full "slow" closure operation. The large size and fast stroking nature of the valve makes it advantageous to limit the number of fast closure operations which the valve experiences. The timed slow closure verifies the valves operability status and that

the valve is not mechanically bound but does not fully satisfy Code exercising requirements. This test condition requires a Relief Request in the IST Program.

3.9.8 COMBINED LICENSE INFORMATION

3.9.8.2 Design Specifications and Reports

Add the following text after the second paragraph in DCD Subsection 3.9.8.2.

STD COL 3.9-2 The design specifications and as-designed design reports prepared for major ASME Section III components and ASME Code, Section III piping will be available for NRC audit prior to fuel load.

The design specifications prepared for ASME Section III auxiliary components and valves will be available for NRC audit prior to fuel load.

Reconciliation of the as-built piping (verification of the thermal cycling and stratification loading considered in the stress analysis discussed in DCD Subsection 3.9.3.1.2) is completed after the construction of the piping systems and prior to fuel load.

3.9.8.3 Snubber Operability Testing

STD COL 3.9-3 This COL Item is addressed in Subsection 3.9.3.4.4.

3.9.8.4 Valve Inservice Testing

STD COL 3.9-4 This COL Item is addressed in Subsections 3.9.6, 3.9.6.2.2, 3.9.6.2.4, 3.9.6.2.5, and 3.9.6.3.

3.9.8.5 Surge Line Thermal Monitoring

STD COL 3.9-5 This COL item is addressed in Subsection 3.9.3.1.2.

3.9.9 REFERENCES

201. Joint Owners Group (JOG) Motor Operated Valve Periodic Verification Study, MPR 2524-A, ADAMS ML063490199, November 2006.

202. ASME Code Case OMN-1, Revision 1, “Alternative Rules for the Preservice and Inservice Testing of Certain Electric Motor-Operated Valve Assemblies in Light Water Reactor Power Plants.”

3.10 SEISMIC AND DYNAMIC QUALIFICATION OF SEISMIC CATEGORY I MECHANICAL AND ELECTRICAL EQUIPMENT

This section of the referenced DCD is incorporated by reference with no departures or supplements.

3.11 ENVIRONMENTAL QUALIFICATION OF MECHANICAL AND ELECTRICAL EQUIPMENT

This section of the referenced DCD is incorporated by reference with the following departures and/or supplements.

3.11.5 COMBINED LICENSE INFORMATION ITEM FOR EQUIPMENT QUALIFICATION FILE

Add the following text to the end of DCD Subsection 3.11.5.

STD COL 3.11-1 The COL holder is responsible for the maintenance of the equipment qualification file upon receipt from the reactor vendor. The documentation necessary to support the continued qualification of the equipment installed in the plant that is within the Environmental Qualification (EQ) Program scope is available in accordance with 10 CFR Part 50 Appendix A, General Design Criterion 1.

EQ files developed by the reactor vendor are maintained as applicable for equipment and certain post-accident monitoring devices that are subject to a harsh environment. The contents of the qualification files are discussed in DCD Section 3D.7. The files are maintained for the operational life of the plant.

For equipment not located in a harsh environment, design specifications received from the reactor vendor are retained. Any plant modifications that impact the equipment use the original specifications for modification or procurement. This process is governed by applicable plant design control or configuration control procedures.

Central to the EQ Program is the EQ Master Equipment List (EQMEL). This EQMEL identifies the electrical and mechanical equipment or components that must be environmentally qualified for use in a harsh environment. The EQMEL consists of equipment that is essential to emergency reactor shutdown, containment isolation, reactor core cooling, or containment and reactor heat removal, or that is otherwise essential in preventing significant release of radioactive material to the environment. This list is developed from the equipment list provided in AP1000 DCD Table 3.11-1. The EQMEL and a summary of equipment qualification results are maintained as part of the equipment qualification file for the operational life of the plant.

Administrative programs are in place to control revision to the EQ files and the EQMEL. When adding or modifying components in the EQ Program, EQ files are generated or revised to support qualification. The EQMEL is revised to reflect these new components. To delete a component from the EQ Program, a deletion justification is prepared that demonstrates why the component can be deleted.

This justification consists of an analysis of the component, an associated circuit review if appropriate, and a safety evaluation. The justification is released and/or referenced on an appropriate change document. For changes to the EQMEL, supporting documentation is completed and approved prior to issuing the changes. This documentation includes safety reviews and new or revised EQ files. Plant modifications and design basis changes are subject to change process reviews, e.g. reviews in accordance with 10 CFR 50.59 or Section VIII of Appendix D to 10 CFR Part 52, in accordance with appropriate plant procedures. These reviews address EQ issues associated with the activity. Any changes to the EQMEL that are not the result of a modification or design basis change are subject to a separate review that is accomplished and documented in accordance with plant procedures.

Engineering change documents or maintenance documents generated to document work performed on an EQ component, which may not have an impact on the EQ file, are reviewed against the current revision of the EQ files for potential impact. Changes to EQ documentation may be due to, but not limited to, plant modifications, calculations, corrective maintenance, or other EQ concerns.

Table 13.4-201 provides milestones for EQ implementation.

APPENDIX 3A
HVAC DUCTS AND DUCT SUPPORTS

This section of the referenced DCD is incorporated by reference with no departures or supplements.

APPENDIX 3B
LEAK-BEFORE-BREAK EVALUATION OF THE AP1000 PIPING

This section of the referenced DCD is incorporated by reference with no departures or supplements.

APPENDIX 3C
REACTOR COOLANT LOOP ANALYSIS METHODS

This section of the referenced DCD is incorporated by reference with no departures or supplements.

APPENDIX 3D
METHODOLOGY FOR QUALIFYING AP1000 SAFETY-RELATED ELECTRICAL AND MECHANICAL EQUIPMENT

This section of the referenced DCD is incorporated by reference with no departures or supplements.

APPENDIX 3E
HIGH-ENERGY PIPING IN THE NUCLEAR ISLAND

This section of the referenced DCD is incorporated by reference with no departures or supplements.

APPENDIX 3F
CABLE TRAYS AND CABLE TRAY SUPPORTS

This section of the referenced DCD is incorporated by reference with no departures or supplements.

APPENDIX 3G
NUCLEAR ISLAND SEISMIC ANALYSES

This section of the referenced DCD is incorporated by reference with no departures or supplements.

APPENDIX 3H
AUXILIARY AND SHIELD BUILDING CRITICAL SECTIONS

This section of the referenced DCD is incorporated by reference with no departures or supplements.

APPENDIX 3I
EVALUATION FOR HIGH FREQUENCY SEISMIC INPUT

This section of the referenced DCD is incorporated by reference with no departures or supplements.

CHAPTER 4

REACTOR

TABLE OF CONTENTS

Section	Title	Page
4.1	SUMMARY DESCRIPTION	4.1-1
4.2	FUEL SYSTEM DESIGN	4.2-1
4.3	NUCLEAR DESIGN	4.3-1
4.4	THERMAL AND HYDRAULIC DESIGN	4.4-1
4.4.7	COMBINED LICENSE INFORMATION	4.4-1
4.5	REACTOR MATERIALS	4.5-1
4.6	FUNCTIONAL DESIGN OF REACTIVITY CONTROL SYSTEMS	4.6-1

CHAPTER 4

REACTOR

4.1 SUMMARY DESCRIPTION

This section of the referenced DCD is incorporated by reference with no departures or supplements.

4.2 FUEL SYSTEM DESIGN

This section of the referenced DCD is incorporated by reference with no departures or supplements.

4.3 NUCLEAR DESIGN

This section of the referenced DCD is incorporated by reference with no departures or supplements.

4.4 THERMAL AND HYDRAULIC DESIGN

This section of the referenced DCD is incorporated by reference with the following departures and/or supplements.

4.4.7 COMBINED LICENSE INFORMATION

Replace the second paragraph in DCD Subsection 4.4.7 with the following:

STD COL 4.4-2 Following selection of the actual plant operating instrumentation and calculation of the instrumentation uncertainties of the operating plant parameters as discussed in DCD Subsection 7.1.6, the design limit DNBR values will be calculated. The calculations will be completed using the RTDP with these instrumentation uncertainties and confirm that either the design limit DNBR values as described in DCD Section 4.4 remain valid or that the safety analysis minimum DNBR bounds the new design limit DNBR values plus DNBR penalties, such as rod bow penalty. This will be completed prior to fuel load.

4.5 REACTOR MATERIALS

This section of the referenced DCD is incorporated by reference with no departures or supplements.

4.6 FUNCTIONAL DESIGN OF REACTIVITY CONTROL SYSTEMS

This section of the referenced DCD is incorporated by reference with no departures or supplements.

CHAPTER 5

REACTOR COOLANT SYSTEM AND CONNECTED SYSTEMS

TABLE OF CONTENTS

Section	Title	Page
5.1	SUMMARY DESCRIPTION	5.1-1
5.2	INTEGRITY OF REACTOR COOLANT PRESSURE BOUNDARY	5.2-1
5.2.1.1	Compliance with 10 CFR 50.55a	5.2-1
5.2.3.2.1	Chemistry of Reactor Coolant	5.2-1
5.2.4	INSERVICE INSPECTION AND TESTING OF CLASS 1 COMPONENTS	5.2-1
5.2.4.1	System Boundary Subject to Inspection	5.2-2
5.2.4.3	Examination Techniques and Procedures	5.2-4
5.2.4.3.1	Examination Methods	5.2-4
5.2.4.3.2	Qualification of Personnel and Examination Systems for Ultrasonic Examination	5.2-5
5.2.4.4	Inspection Intervals	5.2-6
5.2.4.5	Examination Categories and Requirements	5.2-6
5.2.4.6	Evaluation of Examination Results	5.2-7
5.2.4.8	Relief Requests	5.2-7
5.2.4.9	Preservice Inspection of Class 1 Components	5.2-7
5.2.4.10	Program Implementation	5.2-7
5.2.6	COMBINED LICENSE INFORMATION ITEMS	5.2-8
5.2.6.1	ASME Code and Addenda	5.2-8
5.2.6.2	Plant-Specific Inspection Program	5.2-8
5.2.7	REFERENCES	5.2-8
5.3	REACTOR VESSEL	5.3-1
5.3.2.6	Material Surveillance	5.3-1
5.3.2.6.3	Report of Test Results	5.3-1
5.3.3.2	Operating Procedures	5.3-1
5.3.6	COMBINED LICENSE INFORMATION	5.3-2
5.3.6.1	Pressure-Temperature Limit Curves	5.3-2
5.3.6.2	Reactor Vessel Materials Surveillance Program	5.3-2
5.3.6.4	Reactor Vessel Materials Properties Verification	5.3-2
5.3.6.4.1	Reactor Vessel Materials Properties Verification	5.3-2
5.4	COMPONENT AND SUBSYSTEM DESIGN	5.4-1
5.4.2.5	Steam Generator Inservice Inspection	5.4-1
5.4.15	COMBINED LICENSE INFORMATION ITEMS	5.4-1
5.4.16	REFERENCES	5.4-2

CHAPTER 5

REACTOR COOLANT SYSTEM AND CONNECTED SYSTEMS

5.1 SUMMARY DESCRIPTION

This section of the referenced DCD is incorporated by reference with no departures or supplements.

5.2 INTEGRITY OF REACTOR COOLANT PRESSURE BOUNDARY

This section of the referenced DCD is incorporated by reference with the following departures and/or supplements.

5.2.1.1 Compliance with 10 CFR 50.55a

Add the following text after the second sentence the second paragraph of DCD Subsection 5.2.1.1.

STD COL 5.2-1 If a later Code year/addenda than the Design Certification Code year/addenda is used by the material and/or component supplier, then a code reconciliation is performed. The reconciliation is performed using the methodology set forth in ASME Section XI for the repair and replacement of components. The later Code year/addenda must be authorized in 10 CFR 50.55a or in a specific authorization as provided in 50.55a(a)(3). Similarly, if Code Cases other than those included in DCD Table 5.2-3 are used, a similar review and reconciliation is performed.

5.2.3.2.1 Chemistry of Reactor Coolant

Add the following text to the end of DCD Subsection 5.2.3.2.1.

STD SUP 5.2-1 Monitoring of water chemistry is implemented using the guidance of EPRI TR-1002884 “Pressurized Water Reactor Primary Water Chemistry Guidelines: Volume 1” (Reference 201), Appendix F.

5.2.4 INSERVICE INSPECTION AND TESTING OF CLASS 1 COMPONENTS

Add the following after the first paragraph in DCD Subsection 5.2.4:

STD COL 5.2-2 The initial inservice inspection program incorporates the latest edition and addenda of the ASME Boiler and Pressure Vessel Code approved in 10 CFR 50.55a(b) on the date 12 months before initial fuel load. Inservice examination of components and system pressure tests conducted during successive 120-month inspection intervals must comply with the requirements of the latest edition and addenda of the Code incorporated by reference in 10 CFR 50.55a(b) 12 months before the start of the 120-month inspection interval (or the optional ASME Code

cases listed in NRC Regulatory Guide 1.147, that are incorporated by reference in 10 CFR 50.55a(b)), subject to the limitations and modifications listed in 10 CFR 50.55a(b).

5.2.4.1 System Boundary Subject to Inspection

Add the following at the end of DCD Subsection 5.2.4.1:

STD COL 5.2-2 The Class 1 system boundary for both preservice and inservice inspection programs and the system pressure test program includes those items within the Class 1 and Quality Group A (Equipment Class A per DCD Subsection 3.2.2 and DCD Table 3.2-3) boundary. Based on 10 CFR Part 50 and Regulatory Guide 1.26, the Class 1 boundary includes the following:

- Reactor pressure vessel;
- Portions of the Reactor System (RXS);
- Portions of the Chemical and Volume Control System (CVS);
- Portions of the Incore Instrumentation System (IIS);
- Portions of the Passive Core Cooling System (PXS);
- Portions of the Reactor Coolant System (RCS); and
- Portions of the Normal Residual Heat Removal System (RNS).

Those portions of the above systems within the Class 1 boundary are those items that are part of the reactor coolant pressure boundary as defined in Section 5.2.

Exclusions

Portions of the systems within the reactor coolant pressure boundary (RCPB), as defined above, that are excluded from the Class 1 boundary in accordance with 10 CFR Part 50, Section 50.55a, are as follows:

- Those components where, in the event of postulated failure of the component during normal reactor operation, the reactor can be shut down and cooled down in an orderly manner, assuming makeup is provided by the reactor coolant makeup system only; or
- Components that are or can be isolated from the reactor coolant system by two valves in series (both closed, both open, or one closed and the

other open). Each open valve is capable of automatic actuation and, assuming the other valve is open, its closure time is such that, in the event of postulated failure of the component during normal reactor operation, each valve remains operable and the reactor can be shut down and cooled down in an orderly manner, assuming makeup is provided by the reactor coolant makeup system only.

The description of portions of systems excluded from the RCPB does not address Class 1 components exempt from inservice examinations under ASME Code Section XI rules. The Class 1 components exempt from inservice examinations are defined by ASME Section XI, IWB-1220, except as modified by 10 CFR 50.55a.

NRC First Revised Order EA-03-009, “Interim Inspection Requirements for Reactor Pressure Vessel Heads at Pressurized Water Reactors,” established required inspections of reactor pressure vessel heads and associated penetration nozzles at PWRs in response to primary water stress corrosion cracking. A calculation to determine the susceptibility of the reactor pressure vessel head to primary water stress corrosion cracking is completed for the end of each operating cycle. The calculated value and previous inspection findings are used to determine the appropriate susceptibility category and the associated inspection criteria and inspection frequency for the reactor pressure vessel head and penetration nozzles during each refueling outage. ASME Code Case N-729-1, “Alternative Examination Requirements for Pressurized-Water Reactor (PWR) Vessel Upper Heads With Nozzles Having Pressure-Retaining Partial-Penetration Welds, “provides alternative examination requirements in lieu of the requirements in the order. ASME Code Case N-729-1 as modified by the NRC Staff Position on the use of ASME Code Case N-729-1 may be used to perform the inspection the AP1000 reactor pressure vessel head. The staff position on this code case is included as an attachment to NRC letter from John A. Globe, NRC to James H. Riley, NEI dated August 9, 2006. A report is submitted to the NRC detailing the inspection results within 60 days after returning the plant to operation. In addition to the required inspections resulting from the susceptibility category, a visual inspection to identify potential boric acid leaks from pressure-retaining components above the reactor pressure vessel head is performed each refueling outage.

Boric acid corrosion control procedures require inspection of the reactor coolant pressure boundary subject to leakage that can cause boric acid corrosion of the reactor coolant pressure boundary materials. The procedures determine the principal locations where leaks can cause degradation of the primary pressure boundary by boric acid corrosion. Potential paths of the leaking coolant are established. The boric acid corrosion control procedures also contain methods for conducting examinations and performing engineering evaluations to establish the impact on the reactor coolant pressure boundary when leakage is located.

The boric acid corrosion control procedures consist of:

1. Visual inspections of component surfaces that are potentially exposed to borated water leakage.
2. Discovery of leak path and removal of boric acid residue.
3. Assessment of the corrosion.
4. Follow-up inspection for adequacy of corrective actions, as appropriate.

Add the following text at the end of DCD Subsection 5.2.4.1:

STD SUP 5.2-2 The inservice inspection program, along with the boric acid corrosion control procedures, provides guidance for inspecting the integrity of bolting and threaded fasteners.

5.2.4.3 Examination Techniques and Procedures

Add the following at the end of DCD Subsection 5.2.4.3:

5.2.4.3.1 Examination Methods

Ultrasonic Examination of the Reactor Vessel

STD COL 5.2-2 Ultrasonic examination for the RPV is conducted in accordance with the ASME Code, Section XI. The design of the RPV considered the requirements of the ASME Code Section XI with regard to performance of preservice inspection. For the required preservice examinations, the reactor vessel meets the acceptance standards of Section XI, IWB-3510. The RPV shell welds are designed for 100% accessibility for both preservice and inservice inspection. RPV shell welds may be examined from the inside or outside diameter surfaces (or a combination of those techniques) using automated ultrasonic examination equipment. The RPV nozzle-to-shell welds are 100% accessible for preservice inspection but might have limited areas that may not be accessible from the outer surface for inservice examination techniques. If accessibility is limited, an inservice inspection program relief request is prepared and submitted for review approval by the NRC.

Inner radius examinations are performed from the outside of the nozzle using several compound angle transducer wedges to obtain complete coverage of the required examination volume. Alternatively, nozzle inner radius examinations

may be performed using enhanced visual techniques, as allowed by 10 CFR 50.55a(b)(2)(xxi).

Visual Examination

Visual examination methods VT-1, VT-2 and VT-3 are conducted in accordance with ASME Section XI, IWA-2210. In addition, VT-2 examinations meet the requirements of IWA-5240.

Where direct visual VT-1 examinations are conducted without the use of mirrors or with other viewing aids, clearance is provided where feasible for the head and shoulders of a man within a working arm's length of the surface to be examined.

Surface Examination

Magnetic particle and liquid penetrant examination techniques are performed in accordance with ASME Section XI, IWA-2221 and IWA-2222, respectively. Direct examination access for magnetic particle (MT) and liquid penetrant (PT) examination is the same as that required for direct visual (VT-1) examination (see Visual Examination), except that additional access is provided as necessary to enable physical contact with the item in order to perform the examination. Remote MT and PT generally are not appropriate as a standard examination process; however, boroscopes and mirrors can be used at close range to improve the angle of vision.

Volumetric Ultrasonic Direct Examination

Volumetric ultrasonic direct examination is performed in accordance with ASME Section XI, IWA-2232, which references mandatory Appendix I.

Alternative Examination Techniques

As provided by ASME Section XI, IWA-2240, alternative examination methods, a combination of methods, or newly developed techniques may be substituted for the methods specified for a given item in this section, provided that they are demonstrated to be equivalent or superior to the specified method. This provision allows for the use of newly developed examination methods, techniques, etc., which may result in improvements in examination reliability and reductions in personnel exposure. In accordance with 10 CFR 50.55a(b)(2)(xix), IWA-2240 as written in the 1997 Addenda of ASME Section XI must be used when applying these provisions.

5.2.4.3.2 Qualification of Personnel and Examination Systems for Ultrasonic Examination

Personnel performing examinations shall be qualified in accordance with ASME Section XI, Appendix VII. Ultrasonic examination systems shall be qualified in accordance with industry accepted programs for implementation of ASME Section

XI, Appendix VIII. Qualification to ASME Section XI, Appendix VIII, is in compliance with the provisions of 10 CFR 50.55a.

5.2.4.4 Inspection Intervals

Add the following after the second sentence of the first paragraph of DCD Subsection 5.2.4.4:

STD COL 5.2-2 Because 10 CFR 50.55a(g)(4) requires 120-month inspection intervals, Inspection Program B of IWB-2400 must be chosen. The inspection interval is divided into three periods. Period one comprises the first three years of the interval, period two comprises the next four years of the interval, and period three comprises the remaining three years of the inspection interval. Each period can be extended for up to one year to enable an inspection to coincide with a plant outage. The adjustment of period end dates shall not alter the rules and requirements for scheduling inspection intervals.

5.2.4.5 Examination Categories and Requirements

Add the following after the first sentence of DCD Subsection 5.2.4.5:

STD COL 5.2-2 Class 1 piping supports will be examined in accordance with ASME Section XI, IWF-2500.

Preservice examinations required by design specification and preservice documentation are in accordance with ASME Section III, NB-5280. Components exempt from preservice examination are described in ASME Section III, NB-5283.

Add the following after the last sentence of DCD Subsection 5.2.4.5:

The preservice examination is performed once in accordance with ASME XI, IWB-2200, on all of the items selected for inservice examination, with the exception of the examinations specifically excluded by ASME Section XI from preservice requirements, such as VT-3 examination of valve body and pump casing internal surfaces (B-L-2 and B-M-2 examination categories, respectively) and the visual VT-2 examinations for category B-P.

5.2.4.6 Evaluation of Examination Results

Add the following at the end of DCD Subsection 5.2.4.6:

STD COL 5.2-2 Components containing flaws or relevant conditions and accepted for continued service in accordance with the requirements of IWB-3132.4 or IWB-3142.4 are subjected to successive period examinations in accordance with the requirements of IWB-2420. Examinations that reveal flaws or relevant conditions exceeding Table IWB-3410-1 acceptance standards are extended to include additional examinations in accordance with the requirements of IWB-2430.

STD COL 5.2-2 Add Subsections 5.2.4.8, 5.2.4.9, and 5.2.4.10 after the last paragraph of DCD Subsection 5.2.4.7:

5.2.4.8 Relief Requests

The specific areas where the applicable ASME Code requirements cannot be met are identified after the initial examinations are performed. Should relief requests be required, they will be developed through the regulatory process and submitted to the NRC for approval in accordance with 10 CFR 50.55a(a)(3) or 50.55a(g)(5). The relief requests include appropriate justifications and proposed alternative inspection methods.

5.2.4.9 Preservice Inspection of Class 1 Components

Preservice examinations required by design specification and preservice documentation are in accordance with ASME Section III, NB-5281. Volumetric and surface examinations are performed as specified in ASME Section III, NB-5282. Components described in ASME Section III, NB-5283 are exempt from preservice examination.

5.2.4.10 Program Implementation

The milestones for preservice and inservice inspection program implementation are identified in Table 13.4-201.

5.2.6 COMBINED LICENSE INFORMATION ITEMS

5.2.6.1 ASME Code and Addenda

STD COL 5.2-1 This COL Item is addressed in Subsection 5.2.1.1.

5.2.6.2 Plant-Specific Inspection Program

STD COL 5.2-2 This COL Item is addressed in Subsections 5.2.4, 5.2.4.1, 5.2.4.3.1, 5.2.4.3.2, 5.2.4.4, 5.2.4.5, 5.2.4.6, 5.2.4.8, 5.2.4.9, and 5.2.4.10.

5.2.7 REFERENCES

Add the following information at the end of DCD Subsection 5.2.7.

201. EPRI, “Pressurized Water Reactor Primary Water Chemistry Guidelines: Volume 1,” EPRI TR-1002884, Revision 5, October 2003.

5.3 REACTOR VESSEL

This section of the referenced DCD is incorporated by reference with the following departures and/or supplements.

5.3.2.6 Material Surveillance

Add the following information between the first and second paragraphs of DCD Subsection 5.3.2.6.

STD COL 5.3-2 Reactor materials do not begin to be affected by neutron fluence until the reactor begins critical operation. Table 13.4-201 provides milestones for reactor vessel material surveillance program implementation.

Add the following subsection after DCD Subsection 5.3.2.6.2.2.

5.3.2.6.3 Report of Test Results

STD COL 5.3-2 A summary technical report for each capsule withdrawn with the test results is submitted, as specified in 10 CFR 50.4, within one year of the date of capsule withdrawal unless an extension is granted by the Director, Office of Nuclear Reactor Regulation.

The report includes the data required by ASTM E185-82, as specified in paragraph III.B.1 of 10 CFR Part 50, Appendix H, and includes the results of the fracture toughness tests conducted on the beltline materials in the irradiated and unirradiated conditions.

If the test results indicate a change in the Technical Specifications is required, either in the pressure-temperature limits or in the operating procedures required to meet the limits, the expected date for submittal of the revised Technical Specification is provided with the report.

Add the following subsection after DCD Subsection 5.3.3.1.

5.3.3.2 Operating Procedures

STD SUP 5.3-1 Plant operating procedures are developed and maintained to prevent exceeding the pressure-temperature limits identified in reactor coolant system pressure and

temperature limits report, as required by Technical Specification 5.6.6, during normal and abnormal operating conditions and system tests.

5.3.6 COMBINED LICENSE INFORMATION

5.3.6.1 Pressure-Temperature Limit Curves

Replace the text in DCD Subsection 5.3.6.1 with the following.

STD COL 5.3-1 The pressure-temperature curves shown in DCD Figures 5.3-2 and 5.3-3 are generic curves for AP1000 reactor vessel design, and they are the limiting curves based on copper and nickel material composition. Plant-specific curves will be developed based on material composition of copper and nickel. Use of plant-specific curves will be addressed during procurement and fabrication of the reactor vessel. As noted in the bases to Technical Specification 3.4.14, use of plant-specific curves requires evaluation of the LTOP system. This includes an evaluation of the setpoint pressure for the RNS relief valve to determine if the setpoint pressure needs to be changed based on the plant-specific pressure-temperature curves. The development of the plant-specific curves and evaluation of the setpoint pressure are required prior to fuel load.

5.3.6.2 Reactor Vessel Materials Surveillance Program

STD COL 5.3-2 This COL Item is addressed in Subsection 5.3.2.6.

5.3.6.4 Reactor Vessel Materials Properties Verification

Replace the text in DCD Subsection 5.3.6.4.1 with the following.

5.3.6.4.1 Reactor Vessel Materials Properties Verification

STD COL 5.3-4 The verification of plant-specific belt line material properties consistent with the requirements in DCD Subsection 5.3.3.1 and DCD Tables 5.3-1 and 5.3-3 will be completed prior to fuel load. The verification will include a pressurized thermal shock evaluation based on as procured reactor vessel material data and the

projected neutron fluence for the plant design objective of 60 years. This evaluation report will be submitted for NRC staff review.

5.4 COMPONENT AND SUBSYSTEM DESIGN

This section of the referenced DCD is incorporated by reference with the following departures and/or supplements.

5.4.2.5 Steam Generator Inservice Inspection

Add the following information at the end of DCD Subsection 5.4.2.5.

STD COL 5.4-1 A steam generator tube surveillance program is implemented in accordance with the recommendations and guidance of Nuclear Energy Institute (NEI) 97-06, "Steam Generator Program Guidelines" (Reference 201). A program for periodic monitoring of degradation of steam generator internals is also implemented in accordance with NEI 97-06. Applicable Electric Power Research Institute (EPRI) Steam Generator Management Program (SGMP) guidelines are followed as described in the NEI 97-06. The Programs are in compliance with applicable sections of ASME Section XI.

NEI 97-06 and the referenced EPRI SGMP guidelines provide recommendations concerning the inspection of tubes, which cover inspection equipment, baseline inspections, tube selection, sampling and frequency of inspection, methods of recording, required actions based on findings, and tube plugging. The minimum requirements for inservice inspection of steam generators, including plugging criteria, are established in Technical Specification 5.5.4.

The tube surveillance and degradation monitoring programs include provisions to maintain the compatibility of steam generator tubing with primary and secondary coolant to limit the steam generators' susceptibility to corrosion. These provisions are in accordance with NEI 97-06.

5.4.15 COMBINED LICENSE INFORMATION ITEMS

STD COL 5.4-1 This COL Item is addressed in Subsection 5.4.2.5.

5.4.16 REFERENCES

Insert the following information at the end of DCD Subsection 5.4.16.

201. Nuclear Energy Institute, “Steam Generator Program Guidelines,” NEI 97-06, Revision 2, May 2005.

CHAPTER 6

ENGINEERED SAFETY FEATURES

TABLE OF CONTENTS

Section	Title	Page
6.0	ENGINEERED SAFETY FEATURES	6.0-1
6.1	ENGINEERED SAFETY FEATURES MATERIALS	6.1-1
6.1.1.2	Fabrication Requirements	6.1-1
6.1.2.1.6	Quality Assurance Features	6.1-1
6.1.3	COMBINED LICENSE INFORMATION ITEMS	6.1-2
6.1.3.1	Procedure Review	6.1-2
6.1.3.2	Coating Program	6.1-2
6.2	CONTAINMENT SYSTEMS	6.2-1
6.2.5.1	Design Basis	6.2-1
6.2.5.2.2	System Operation	6.2-1
6.2.6	COMBINED LICENSE INFORMATION FOR CONTAINMENT LEAK RATE TESTING	6.2-3
6.3	PASSIVE CORE COOLING SYSTEM	6.3-1
6.3.8	COMBINED LICENSE INFORMATION	6.3-1
6.3.8.1	Containment Cleanliness Program	6.3-1
6.3.8.2	Verification of Water Sources for Long-Term Recirculation Cooling Following a LOCA	6.3-2
6.4	HABITABILITY SYSTEMS	6.4-1
6.4.3	SYSTEM OPERATION	6.4-1
6.4.4	SYSTEM SAFETY EVALUATION	6.4-1
6.4.4.1	Dual Unit Analysis	6.4-1
6.4.4.2	Toxic Chemical Habitability Analysis	6.4-2
6.4.7	COMBINED LICENSE INFORMATION	6.4-2
6.5	FISSION PRODUCT REMOVAL AND CONTROL SYSTEMS	6.5-1
6.6	INSERVICE INSPECTION OF CLASS 2, 3, AND MC COMPONENTS	6.6-1
6.6.1	COMPONENTS SUBJECT TO EXAMINATION	6.6-1
6.6.2	ACCESSIBILITY	6.6-1
6.6.3	EXAMINATION TECHNIQUES AND PROCEDURES	6.6-2

TABLE OF CONTENTS (Continued)

Section	Title	Page
6.6.3.1	Examination Methods	6.6-2
6.6.3.2	Qualification of Personnel and Examination Systems for Ultrasonic Examination	6.6-3
6.6.3.3	Relief Requests	6.6-3
6.6.4	INSPECTION INTERVALS	6.6-4
6.6.6	EVALUATION OF EXAMINATION RESULTS	6.6-4
6.6.9	COMBINED LICENSE INFORMATION ITEMS	6.6-5
6.6.9.1	Inspection Programs	6.6-5
6.6.9.2	Construction Activities	6.6-5
APP. 6A	FISSION PRODUCT DISTRIBUTION IN THE AP1000 POST-DESIGN BASIS ACCIDENT CONTAINMENT ATMOSPHERE	6A-1

CHAPTER 6

ENGINEERED SAFETY FEATURES

6.0 ENGINEERED SAFETY FEATURES

This section of the referenced DCD is incorporated by reference with no departures or supplements.

6.1 ENGINEERED SAFETY FEATURES MATERIALS

This section of the referenced DCD is incorporated by reference with the following departures and/or supplements.

6.1.1.2 Fabrication Requirements

Add the following information to the end of DCD Subsection 6.1.1.2:

STD COL 6.1-1

In accordance with Appendix B to 10 CFR Part 50, the quality assurance program establishes measures to provide control of special processes. One element of control is the review and acceptance of vendor procedures that pertain to the fabrication, welding, and other quality assurance methods for safety related component to determine both code and regulatory conformance. Included in this review and acceptance process are those vendor procedures necessary to provide conformance with the requirements of Regulatory Guides 1.31 and 1.44 for engineered safety features components as discussed in DCD Section 6.1 and reactor coolant system components as discussed in DCD Subsection 5.2.3.

6.1.2.1.6 Quality Assurance Features

STD COL 6.1-2

Replace the third paragraph under the subsection titled “Service Level I and Service Level III Coatings” within DCD Subsection 6.1.2.1.6 with the following information.

The protective coatings program controls the procurement, application, inspection, and monitoring of Service Level I and Service Level III coatings with the quality assurance features discussed above.

The protective coatings program complies with Regulatory Guide 1.54, and is controlled and implemented by administrative procedures.

6.1.3 COMBINED LICENSE INFORMATION ITEMS

6.1.3.1 Procedure Review

STD COL 6.1-1 This COL Item is addressed in Subsection 6.1.1.2.

6.1.3.2 Coating Program

STD COL 6.1-2 This COL Item is addressed in Subsection 6.1.2.1.6.

6.2 CONTAINMENT SYSTEMS

This section of the referenced DCD is incorporated by reference with the following departures and/or supplements.

6.2.5.1 Design Basis

Add the following information at the end of DCD Subsection 6.2.5.1, as identified in Appendix A to NuStart Technical Report AP-TR-NS01-A, Rev 2, “Containment Leak Rate Test Program Description.”

STD COL 6.2-1 The Containment Leak Rate Test Program using 10 CFR Part 50, Appendix J Option B is established in accordance with NEI 94-01 (DCD Subsection 6.2.7, Reference 30), as modified and endorsed by the NRC in Regulatory Guide 1.163. Table 13.4-201 provides milestones for containment leak rate testing implementation.

6.2.5.2.2 System Operation

STD COL 6.2-1 Add the following information at the end of the subsection "Scheduling and Reporting of Periodic Tests" within DCD Subsection 6.2.5.2.2, as identified in Appendix A to NuStart Technical Report AP-TR-NS01-A, Rev 2, “Containment Leak Rate Test Program Description.”

Schedules for the performance of periodic Type A, B, and C leak rate tests are in accordance with NEI 94-01, as endorsed and modified by Regulatory Guide 1.163, and described below:

Type A Tests

A preoperational Type A test is conducted prior to initial fuel load. If initial fuel load is delayed longer than 36 months after completion of the preoperational Type A test, a second preoperational Type A test shall be performed prior to initial fuel load. The first periodic Type A test is performed within 48 months after the successful completion of the last preoperational Type A test. Periodic Type A tests are performed at a frequency of at least once per 48 months, until acceptable performance is established. The interval for testing begins at initial reactor operation. Each test interval begins upon completion of a Type A test and ends at the start of the next test. The extension of the Type A test interval is determined in accordance with NEI 94-01.

Type A testing is performed during a period of reactor shutdown at a frequency of at least once per 10 years based on acceptable performance history. Acceptable performance history is defined as successful completion of two consecutive Type A tests where the calculated performance leakage rate was less than 1.0 L_a. A preoperational Type A test may be used as one of the two Type A tests that must be successfully completed to extend the test interval, provided that an engineering analysis is performed to document why a preoperational Type A test can be treated as a periodic test. Elapsed time between the first and last tests in a series of consecutive satisfactory tests used to determine performance shall be at least 24 months.

Type B Tests (Except Containment Airlocks)

Type B tests are performed prior to initial entry into Mode 4. Subsequent periodic Type B tests are performed at a frequency of at least once per 30 months, until acceptable performance is established. The test intervals for Type B penetrations may be increased based upon completion of two consecutive periodic as-found Type B tests where results of each test are within allowable administrative limits. Elapsed time between the first and last tests in a series of consecutive satisfactory tests used to determine performance shall be 24 months or the nominal test interval (e.g., refueling cycle) for the component prior to implementing Option B of 10 CFR Part 50, Appendix J. An extended test interval for Type B tests may be increased to a specific value in a range of frequencies from greater than once per 30 months up to a maximum of once per 120 months. The extension of specific test intervals for Type B penetrations is determined in accordance with NEI 94-01.

Type B Tests (Containment Airlocks)

Containment airlock(s) are tested at an internal pressure of not less than P_{ac}. (Prior to a preoperational Type A test P_{ac}= P_a.) Subsequent periodic tests are performed at a frequency of at least once per 30 months. In addition, equalizing valves, door seals, and penetrations with resilient seals (i.e., shaft seals, electrical penetrations, view port seals and other similar penetrations) that are testable, are tested at a frequency of once per 30 months.

For periods of multiple containment entries where the airlock doors are routinely used for access more frequently than once every seven days (e.g., shift or daily inspection tours of the containment), door seals may be tested once per 30 days during this time period.

Airlock door seals are tested prior to a preoperational Type A test. When containment integrity is required, airlock door seals are tested within seven days after each containment access.

Type C Tests

Type C tests are performed prior to initial entry into Mode 4. Subsequent periodic Type C tests are performed at a frequency of at least once per 30 months, until

adequate performance has been established. Test intervals for Type C valves may be increased based upon completion of two consecutive periodic as-found Type C tests where the result of each test is within allowable administrative limits. Elapsed time between the first and last tests in a series of consecutive passing tests used to determine performance shall be 24 months or the nominal test interval (e.g., refueling cycle) for the valve prior to implementing Option B of 10 CFR Part 50, Appendix J. Intervals for Type C testing may be increased to a specific value in a range of frequencies from 30 months up to a maximum of 60 months. Test interval extensions for Type C valves are determined in accordance with NEI 94-01.

Reporting

A post-outage report is prepared presenting results of the previous cycle's Type B and Type C tests, and Type A, Type B and Type C tests, if performed during that outage. The report is available on-site for NRC review. The report shows that the applicable performance criteria are met, and serves as a record that continuing performance is acceptable.

STD COL 6.2-1 Add the following subsection at the end of DCD Subsection 6.2.5.2.2, as identified in Appendix A to NuStart Technical Report AP-TR-NS01-A, Rev 2, “Containment Leak Rate Test Program Description.”

Acceptance Criteria

Acceptance criteria for Type A, B and C Tests are established in Technical Specification 5.5.8.

6.2.6 COMBINED LICENSE INFORMATION FOR CONTAINMENT LEAK RATE TESTING

STD COL 6.2-1 This COL item is addressed in Subsections 6.2.5.1 and 6.2.5.2.2.

6.3 PASSIVE CORE COOLING SYSTEM

This section of the referenced DCD is incorporated by reference with the following departures and/or supplements.

6.3.8 COMBINED LICENSE INFORMATION

6.3.8.1 Containment Cleanliness Program

Insert the following information at the end of DCD Subsection 6.3.8.1:

This COL Item is addressed below.

STD COL 6.3-1 Administrative procedures implement the containment cleanliness program. Implementation of the program minimizes the amount of debris that might be left in containment following refueling and maintenance outages. The program is consistent with the containment cleanliness program used in the evaluation discussed in DCD Subsection 6.3.8.2. The program includes as a minimum the following:

Responsibilities

The program defines the organizational responsibilities for implementing the program; defines personnel and material controls; and defines the inspection and reporting requirements.

Implementation

Containment Entry

- Controls to account for the quantities and types of materials introduced into the containment.
- Limits on the types and quantities of materials, including scaffolding and tools, for a particular entry.
- Defined prohibited materials and limits on quantities of materials that may generate hydrogen when exposed to the containment environment.
- Personnel responsible for authorizing the types and quantities of material that may be introduced into containment, and approving the leaving of these materials unattended in containment.

- Controls for loose items, such as keys and pens, which could be inadvertently left in containment.
- Methods and controls for securing any items and materials left unattended in containment.

Containment Exit

- Controls for accounting for tools, equipment and other material left unattended in containment necessary for ongoing work.
- Controls for accounting of the permanent removal of materials previously introduced into the containment.
- Limits on the types and quantities of materials, including scaffolding and tools, that may be left unattended in containment during outages and power operation. Types of materials considered are tape, labels, plastic film, and paper and cloth products.
- Requirements and actions to be taken for unaccounted for material.
- Requirements for final containment cleanliness inspections.
- Record keeping requirements for entry/exit logs.

6.3.8.2 Verification of Water Sources for Long-Term Recirculation Cooling Following a LOCA

Insert the following information between the first and second paragraphs of DCD Subsection 6.3.8.2.

STD COL 6.3-2 An assessment of the acceptability of the screen performance will be provided by performing testing and analysis of the screens. Downstream effects will be assessed to confirm the coolability of the core. The testing, analysis, and assessments will be completed prior to fuel load.

6.4 HABITABILITY SYSTEMS

This section of the referenced DCD is incorporated by reference with the following departures and/or supplements.

6.4.3 SYSTEM OPERATION

Add the following information at the end of DCD Subsection 6.4.3:

STD COL 6.4-2 Generic Issue 83 addresses the importance of maintaining control room habitability following an accidental release of external toxic or radioactive material or smoke and the capability of the control room operators to safely control the reactor. Procedures and training for control room habitability are written in accordance with Section 13.5 for control room operating procedures, and Section 13.2 for operator training. The procedures and training are verified to be consistent to the intent of Generic Issue 83.

6.4.4 SYSTEM SAFETY EVALUATION

Insert the following subsections at the end of DCD Subsection 6.4.4.

6.4.4.1 Dual Unit Analysis

STD SUP 6.4-1 Credible events that could put the control room operators at risk from a dose standpoint at a single AP1000 unit have been evaluated and addressed in the DCD. The dose to the control room operators at an adjacent AP1000 unit due to a radiological release from another unit is bounded by the dose to control room operators on the affected unit. While it is possible that a unit may be downwind in an unfavorable location, the dose at the downwind unit would be bounded by what has already been evaluated for a single unit AP1000. Simultaneous accidents at multiple units at a common site are not considered to be a credible event.

VEGP SUP 6.4-2 The hazard due to the effects of a Design Basis Accident (DBA) from Units 1 and 2 is discussed in ESPA SSAR Subsection 2.2.3.4.

6.4.4.2 Toxic Chemical Habitability Analysis

VEGP COL 6.4-1
VEGP COL 9.4-1b

Evaluation of control room habitability for a postulated release of chemicals is addressed in Section 2.2.

During a toxic gas emergency, the control room operators have the option of manually actuating the emergency habitability system (DCD Subsection 1.9.4.2.3, Issue 83). This action activates isolation dampers for the control room and supplies positive internal pressure and breathing air via bottled gas. Because the emergency habitability system isolates and pressurizes the control room, the activation of the system stabilizes and begins to decrease the concentration of toxic gas in the control room at the actuation value.

Normal HVAC operation would resume after the gas cloud passes the site, rapidly dropping the remaining elevated levels of toxic gas in the control room to non-detectable levels.

6.4.7 COMBINED LICENSE INFORMATION

VEGP COL 6.4-1

This COL Item is addressed in Subsections 2.2.3.2.3.1, 2.2.3.2.3.2, 2.2.3.3, and 6.4.4.2.

STD COL 6.4-2

This COL Item is addressed in Subsection 6.4.3.

6.5 FISSION PRODUCT REMOVAL AND CONTROL SYSTEMS

This section of the referenced DCD is incorporated by reference with no departures or supplements.

6.6 INSERVICE INSPECTION OF CLASS 2, 3, AND MC COMPONENTS

This section of the referenced DCD is incorporated by reference with the following departures and/or supplements.

Add the following to DCD Section 6.6 ahead of Subsection 6.6.1 heading:

STD COL 6.6-1 The initial inservice inspection program incorporates the latest edition and addenda of the ASME Boiler and Pressure Vessel Code approved in 10 CFR 50.55a(b) on the date 12 months before initial fuel load. Inservice examination of components and system pressure tests conducted during successive 120-month inspection intervals must comply with the requirements of the latest edition and addenda of the Code incorporated by reference in 10 CFR 50.55a(b) 12 months before the start of the 120-month inspection interval (or the optional ASME Code cases listed in Regulatory Guide 1.147, that are incorporated by reference in 10 CFR 50.55a(b), subject to the limitations and modifications listed in 10 CFR 50.55a(b)).

6.6.1 COMPONENTS SUBJECT TO EXAMINATION

Add the following to the end of DCD Subsection 6.6.1:

STD COL 6.6-1 Class 2 and 3 components are included in the equipment designation list and the line designation list contained in the inservice inspection program.

6.6.2 ACCESSIBILITY

Revise the first and last sentences of the third paragraph in DCD Subsection 6.6.2 to add supplemental information as follows:

STD SUP 6.6-1 Considerable experience has been drawn on in designing, locating, and supporting Quality Group B and C (ASME Class 2 and 3) and Class MC pressure-retaining components to permit pre-service and inservice inspection required by Section XI of the ASME Code. Factors such as examination requirements, examination techniques, accessibility, component geometry, and material selections are used in establishing the designs. The inspection design goals are to eliminate uninspectable components, reduce occupational radiation exposure, reduce inspection times, allow state-of-the-art inspection systems, and enhance

detection and the reliability of flaw characterization. There are no Quality Group B and C components or Class MC components, which require inservice inspection during reactor operation.

Add the following to the end of DCD Subsection 6.6.2:

STD COL 6.6-2 During the construction phase of the project, anomalies and construction issues are addressed using change control procedures. Modifications reviewed following design certification adhere to the same level of review as the certified design per 10 CFR Part 50, Appendix B as implemented by the Westinghouse Quality Management System (QMS). The QMS requires that changes to approved design documents, including field changes, are subject to the same review and approval process as the original design. This explicitly requires the field change process to follow the same level of review that was required during the design process. Accessibility and inspectability are key components of the design process.

Control of accessibility for inspectability and testing during post-design certification activities is provided via procedures for design control and plant modifications.

6.6.3 EXAMINATION TECHNIQUES AND PROCEDURES

Add the following Subsections 6.6.3.1, 6.6.3.2 and 6.6.3.3 to the end of DCD Subsection 6.6.3:

6.6.3.1 Examination Methods

Visual Examination

STD COL 6.6-1 Visual examination methods VT-1, VT-2 and VT-3 are conducted in accordance with ASME Section XI, IWA-2210. In addition, VT-2 examinations meet the requirements of IWA-5240.

Where direct visual VT-1 examinations are conducted without the use of mirrors or with other viewing aids, clearance is provided in accordance with Table IWA-2210-1.

Surface Examination

Magnetic particle, liquid penetrant, and eddy current examination techniques are performed in accordance with ASME Section XI, IWA-2221, IWA-2222, and

IWA-2223 respectively. Direct examination access for magnetic particle (MT) and liquid penetrant (PT) examination is the same as that required for direct visual (VT-1) examination (see Visual Examination), except that additional access is provided as necessary to enable physical contact with the item in order to perform the examination. Remote MT and PT generally are not appropriate as a standard examination process; however, boroscopes and mirrors can be used at close range to improve the angle of vision.

Ultrasonic Examination

Volumetric ultrasonic direct examination is performed in accordance with ASME Section XI, IWA-2232, which references mandatory Appendix I.

Alternative Examination Techniques

As provided by ASME Section XI, IWA-2240, alternative examination methods, a combination of methods, or newly developed techniques may be substituted for the methods specified for a given item in this section, provided that they are demonstrated to be equivalent or superior to the specified method. This provision allows for the use of newly developed examination methods, techniques, etc., which may result in improvements in examination reliability and reductions in personnel exposure. In accordance with 10 CFR 50.55a(b)(2)(xix), IWA-2240 as written in the 1997 Addenda of ASME Section XI must be used when applying these provisions.

6.6.3.2 Qualification of Personnel and Examination Systems for Ultrasonic Examination

Personnel performing examinations shall be qualified in accordance with ASME Section XI, Appendix VII. Ultrasonic examination systems shall be qualified in accordance with industry accepted programs for implementation of ASME Section XI, Appendix VIII.

6.6.3.3 Relief Requests

The specific areas where the applicable ASME Code requirements cannot be met are identified after the examinations are performed. Should relief requests be required, they will be developed through the regulatory process and submitted to the NRC for approval in accordance with 10 CFR 50.55a(a)(3) or 50.55a(g)(5). The relief requests include appropriate justifications and proposed alternative inspection methods.

6.6.4 INSPECTION INTERVALS

Add the following to the end of DCD Subsection 6.6.4:

STD COL 6.6-1 Because 10 CFR 50.55a(g)(4) requires 120-month inspection intervals, Inspection Program B of IWB-2400 must be chosen. The inspection interval is divided into three periods. Period one comprises the first three years of the interval, period two comprises the next four years of the interval, and period three comprises the remaining three years of the inspection interval. The periods within each inspection interval may be extended by as much as one year to permit inspections to be concurrent with plant outages. The adjustment of period end dates shall not alter the rules and requirements for scheduling inspection intervals. It is intended that inservice examinations be performed during normal plant outages, such as refueling shutdown or maintenance shutdowns occurring during the inspection interval.

6.6.6 EVALUATION OF EXAMINATION RESULTS

Add the following new paragraph at the end of DCD Subsection 6.6.6:

STD COL 6.6-1 Components containing flaws or relevant conditions and accepted for continued service in accordance with the requirements of IWC-3122.3 or IWC-3132.3 for Class 2 components, IWD-3000 for Class 3 components, IWE-3122.3 for Class MC components, or IWF-3112.2 or IWF-3122.2 for component supports, are subjected to successive period examinations in accordance with the requirements of IWC-2420, IWD-2420, IWE-2420, or IWF-2420, respectively. Examinations that reveal flaws or relevant conditions exceeding Table IWC-3410-1, IWD-3000, IWE-3000, or IWF-3400 acceptance standards are extended to include additional examinations in accordance with the requirements of IWC-2430, IWD-2430, or IWF-2430, respectively.

6.6.9 COMBINED LICENSE INFORMATION ITEMS

6.6.9.1 Inspection Programs

STD COL 6.6-1 This COL Item is addressed in Section 6.6 introduction, and in Subsections 6.6.1, 6.6.3.1, 6.6.3.2, 6.6.3.3, 6.6.4, and 6.6.6.

6.6.9.2 Construction Activities

STD COL 6.6-2 This COL Item is addressed in Subsection 6.6.2.

APPENDIX 6A
FISSION PRODUCT DISTRIBUTION IN THE AP1000 POST-DESIGN BASIS ACCIDENT CONTAINMENT ATMOSPHERE

This section of the referenced DCD is incorporated by reference with no departures or supplements.

CHAPTER 7

INSTRUMENTATION AND CONTROLS

TABLE OF CONTENTS

Section	Title	Page
7.1	INTRODUCTION	7.1-1
7.2	REACTOR TRIP	7.2-1
7.3	ENGINEERED SAFETY FEATURES	7.3-1
7.4	SYSTEMS REQUIRED FOR SAFE SHUTDOWN	7.4-1
7.5	SAFETY-RELATED DISPLAY INFORMATION	7.5-1
7.6	INTERLOCK SYSTEMS IMPORTANT TO SAFETY	7.6-1
7.7	CONTROL AND INSTRUMENTATION SYSTEMS	7.7-1

CHAPTER 7

INSTRUMENTATION AND CONTROLS

7.1 INTRODUCTION

This section of the referenced DCD is incorporated by reference with no departures or supplements.

7.2 REACTOR TRIP

This section of the referenced DCD is incorporated by reference with no departures or supplements.

7.3 ENGINEERED SAFETY FEATURES

This section of the referenced DCD is incorporated by reference with no departures or supplements.

7.4 SYSTEMS REQUIRED FOR SAFE SHUTDOWN

This section of the referenced DCD is incorporated by reference with no departures or supplements.

7.5 SAFETY-RELATED DISPLAY INFORMATION

This section of the referenced DCD is incorporated by reference with no departures or supplements.

7.6 INTERLOCK SYSTEMS IMPORTANT TO SAFETY

This section of the referenced DCD is incorporated by reference with no departures or supplements.

7.7 CONTROL AND INSTRUMENTATION SYSTEMS

This section of the referenced DCD is incorporated by reference with no departures or supplements.

CHAPTER 8

ELECTRIC POWER

TABLE OF CONTENTS

Section	Title	Page
8.1	INTRODUCTION	8.1-1
8.1.1	UTILITY GRID DESCRIPTION	8.1-1
8.1.4.3	Design Criteria, Regulatory Guides, and IEEE Standards	8.1-2
8.2	OFFSITE POWER SYSTEM	8.2-1
8.2.1	SYSTEM DESCRIPTION	8.2-1
8.2.1.1	Transmission Switchyard	8.2-3
8.2.1.2	Transformer Area	8.2-7
8.2.1.2.1	Switchyard Protection Relay Scheme	8.2-8
8.2.1.3	Switchyard Control Building	8.2-8
8.2.1.4	Switchyard and Transmission Lines Testing and Inspection	8.2-8
8.2.2	GRID STABILITY	8.2-10
8.2.5	COMBINED LICENSE INFORMATION FOR OFFSITE ELECTRICAL POWER	8.2-12
8.3	ONSITE POWER SYSTEMS	8.3-1
8.3.1.1.1	Onsite AC Power System	8.3-1
8.3.1.1.2.3	Onsite Standby Power System Performance	8.3-1
8.3.1.1.2.4	Operation, Inspection, and Maintenance	8.3-1
8.3.1.1.6	Containment Building Electrical Penetrations	8.3-1
8.3.1.1.7	Grounding System	8.3-2
8.3.1.1.8	Lightning Protection	8.3-2
8.3.2.1.1.1	Class 1E DC Distribution	8.3-3
8.3.2.1.4	Maintenance and Testing	8.3-3
8.3.3	COMBINED LICENSE INFORMATION FOR ONSITE ELECTRICAL POWER	8.3-3
8.3.4	REFERENCES	8.3-4

LIST OF TABLES

Number	Title
8.1-201	Site-Specific Guidelines For Electric Power Systems

LIST OF FIGURES

Number	Title
8.2-201	Offsite Power System One-Line Diagram
8.2-202	Switchyard General Arrangement

CHAPTER 8

ELECTRIC POWER

8.1 INTRODUCTION

This section of the referenced DCD is incorporated by reference with the following departures and/or supplements.

8.1.1 UTILITY GRID DESCRIPTION

Replace the existing information in DCD Subsection 8.1.1 with the following information.

VEGP SUP 8.1-1 VEGP is interconnected to the Southern Balancing Authority Area (SBAA) transmission grid operated by Southern Company Transmission (SCT). The SBAA transmission grid consists of transmission facilities owned by Alabama Power Company, Georgia Power Company, Gulf Power Company, and Mississippi Power Company, all subsidiaries of the Southern Company and Georgia Transmission Corporation, the Municipal Electric Authority of Georgia and Dalton Utilities, who along with Georgia Power Company are participants in and make up the Georgia Integrated Transmission System. The SBAA transmission grid is interconnected with Duke Power Company, South Carolina Electric and Gas Company, South Carolina Public Service Authority (Santee Cooper), Florida Power and Light Company, Progress Energy, City of Tallahassee, Entergy Gulf States, Entergy Louisiana, Mississippi Power and Light, and the Tennessee Valley Authority. The SBAA transmission grid interconnects hydro plants, fossil-fueled plants, and nuclear plants supplying electric energy over a transmission grid consisting of various voltages up to 500 kV.

VEGP Units 3 and 4 are located in eastern Burke County, Georgia, approximately 26 miles southeast of Augusta, Georgia and 100 miles northwest of Savannah, Georgia, directly across the Savannah River from the US Department of Energy's Savannah River Site in Barnwell County, South Carolina. VEGP Units 1 and 2, which are two Westinghouse Electric Company, LLC (Westinghouse) pressurized water reactors (PWRs), have been in commercial operation since 1987 and 1989, respectively. Plant Wilson, a six-unit oil-fueled combustion turbine facility owned by Georgia Power Company (GPC), is also located on the VEGP site. VEGP Units 3 and 4 are adjacent to and west of VEGP Units 1 and 2. VEGP Units 1 and 2 are co-owned by Georgia Power Company, Oglethorpe Power Corporation, the Municipal Electric Authority of Georgia, and the City of Dalton, Georgia. Southern Nuclear Operating Company (SNC) is the licensed operator of the nuclear facilities at the VEGP site, with control of the nuclear facilities, including complete authority to regulate any and all access and activity within the plant exclusion area boundary. GPC and SNC are subsidiaries of Southern Company.

VEGP Unit 3 is connected to the Units 1, 2 and 3, 230/500 kV switchyard at the 230 kV level. The 230 kV and 500 kV levels of the Units 1, 2 and 3, 230/500 kV switchyard are arranged in a breaker-and-a-half configuration and are interconnected through two, 230/500 kV autotransformers. VEGP Unit 4 is connected to the Unit 4, 500 kV switchyard. This switchyard is also arranged in a breaker-and-a-half configuration. The Unit 4, 500 kV switchyard is connected to the 500 kV section of the Units 1, 2 and 3, 230/500 kV switchyard by overhead lines. The Reserve Auxiliary Transformers (RATs) for Units 3 and 4 are supplied by two overhead lines from a 230 kV switchyard with a ring bus configuration. Five, 230 kV and three, 500 kV transmission lines connect the VEGP high voltage switchyards to the remainder of the SBAA transmission grid.

8.1.4.3 Design Criteria, Regulatory Guides, and IEEE Standards

---

VEGP SUP 8.1-2 Add the following information between the second and third paragraphs of this subsection.

Offsite and onsite ac power systems' conformance to Regulatory Guides and IEEE Standards identified by DCD Table 8.1-1 as site-specific and to other applicable Regulatory Guides is as indicated in Table 8.1-201.

Table 8.1-201
Site-Specific Guidelines For Electric Power Systems

	Criteria			Applicability (FSAR[a] Section/Subsection)			Remarks
				8.2	8.3.1	8.3.2	
1.	Regulatory Guides						
	a.	RG 1.129	Maintenance, Testing, and Replacement of Vented Lead-Acid Storage Batteries for Nuclear Power Plants			G	Battery Service tests are performed in accordance with the Regulatory Guide.
	b.	RG 1.155	Station Blackout				Not applicable[b]
	c.	RG 1.204	Guidelines for Lightning Protection of Nuclear Power Plants	G	G		Implemented via IEEE 665.
	d.	RG 1.206	Combined License Applications for Nuclear Power Plants (LWR Edition)	G	G	G	
2.	Branch Technical Positions						
	a.	BTP 8-3 (BTP ICSB-11 in DCD)	Stability of Offsite Power Systems	G			Stability Analysis of the Offsite Power System is performed in accordance with the BTP.

a) "G" denotes guidelines as defined in NUREG-0800, Rev. 3, Table 8-1 (SRP). No letter denotes "Not Applicable."
b) Station Blackout and the associated guidelines were addressed as a design issue in the DCD.

8.2 OFFSITE POWER SYSTEM

This section of the referenced DCD is incorporated by reference with the following departures and/or supplements.

8.2.1 SYSTEM DESCRIPTION

Delete the first, second, and sixth paragraphs and the first and last sentences of the fourth paragraph, of DCD Section 8.2.1. Add the following information before the fifth paragraph of DCD Subsection 8.2.1.

VEGP COL 8.2-1 The Southern Balancing Authority Area (SBAA) transmission grid supplies the off-site AC power (preferred and maintenance power) for Vogtle Electric Generating Plant (VEGP) Units 3 and 4 via three, high voltage switchyards located north of the facility. The three, high voltage switchyards are defined as follows:

- Units 1, 2 and 3, 230/500 kV switchyard
- Unit 4, 500 kV switchyard
- Units 3 and 4, Reserve Auxiliary Transformer (RAT) supply, 230 kV switchyard

The interconnection of the three switchyards, and the 230 kV and 500 kV transmission lines are shown on Figures 8.2-201 and 8.2-202.

VEGP Units 3 and 4 are connected into a transmission grid supplying large load centers. Unit 3 is tied into the 230 kV transmission grid via the Units 1, 2 and 3, 230/500 kV switchyard. Unit 4 is tied into the 500 kV transmission grid via the Unit 4, 500 kV switchyard.

The Units 3 and 4, RAT supply, 230 kV switchyard, consists of 4 breakers installed in a ring bus configuration. The Augusta Newsprint transmission line and the Units 1, 2 and 3, 230/500 kV switchyard are connected to the Units 3 and 4, RAT supply, 230kV switchyard.

<u>230 kV Overhead Transmission Lines</u>

Five, 230 kV overhead transmission lines connect the Units 1, 2 and 3, 230/500 kV switchyard to other substations throughout the transmission grid. Each 230 kV transmission line is connected to a Georgia Integrated Transmission System or a South Carolina Electric and Gas (SCEG) substation. The five, 230 kV transmission lines originate at the VEGP switchyards and connect to various substations as shown below.

230 kV Line	Termination Point	Length (miles)	Thermal Rating (MVA)
Augusta Newsprint	Augusta Newsprint Sub	20	596
Goshen White	Goshen Sub	19	866
Goshen Black	Goshen Sub	19	866
SCEG	Savannah River Plant Sub	22	1020
Plant Wilson	Plant Wilson Sub	1	718

The Augusta Newsprint, Goshen White and Goshen Black 230 kV lines are on a common right-of-way for the first 18.75 miles from the plant. The lines exit the north side of the switchyard and leave the plant site to the northwest. Approximately 0.5 miles from the plant, the Units 3 and 4, RAT supply, 230 kV switchyard is installed along the Augusta Newsprint transmission line.

The SCEG 230 kV line exits the north side of the switchyard, crosses the Savannah River and continues to the Savannah River Plant Substation in South Carolina.

The 230 kV transmission line from the Unit 3 generator to the Units 1, 2 and 3, 230/500 kV switchyard travels under these four transmission lines. All high voltage equipment and conductors are designed to meet the requirements of the National Electrical Safety Code (NESC) and Georgia Power Company (GPC) engineering standards. Electrical clearances phase-to-phase and phase-to-ground are determined by NESC and engineering requirements.

The Plant Wilson 230 kV line exits the north side of the switchyard and leaves the plant site traveling southeast to the Wilson switchyard less than 1 mile away.

500 kV Overhead Transmission Lines

Three 500 kV overhead transmission lines connect the Units 1, 2 and 3, 230/500 kV switchyard and the Unit 4, 500 kV switchyard to other substations throughout the SBAA transmission grid. Each 500 kV transmission line is connected to a Georgia Integrated Transmission System substation. The three, 500 kV transmission lines originate at the VEGP switchyards and connect to various substations as shown below.

500kV Line	Termination Point	Length (miles)	Thermal Rating (MVA)
West McIntosh	West McIntosh Sub	69	2439
Scherer	Scherer Sub	154	2701
Thomson	Thomson Sub	52	2701

The Thomson 500 kV line exits the switchyard to the north and crosses over the 230 kV transmission line from the Unit 3 generator and then west over the 230 kV transmission lines to the Units 3 and 4 RATs. All high voltage equipment and conductors are designed to meet the requirements of the National Electrical Safety Code (NESC) and GPC engineering standards. After leaving the plant, the Thomson and Scherer 500 kV lines are on a common right-of-way for approximately the first 5 miles. The lines exit the north side of the switchyard and leave the plant site to the west.

The West McIntosh 500 kV line exits the north side of the switchyard and leaves the plant site traveling to the west before changing direction to the southeast.

All transmission lines connected to the VEGP switchyards are suspended from steel, lattice-type towers designed to provide clearances consistent with NESC and GPC engineering standards. Electrical clearances phase-to-ground are determined by NESC and engineering requirements, but are not less than 27 feet for 230 kV transmission lines and 32 feet for 500 kV transmission lines. Transmission towers include overhead ground wires. All towers are grounded with either ground rods or a counterpoise system.

VEGP CDI

A transformer area containing the generator step-up transformers (GSU), the unit auxiliary transformers (UATs), and reserve auxiliary transformers (RATs) is located next to each turbine building.

8.2.1.1 Transmission Switchyard

Replace the information in DCD Subsection 8.2.1.1 with the following information.

VEGP COL 8.2-1

A 230 kV air insulated switchyard, installed along the Augusta Newsprint transmission line, supplies power to the Units 3 and 4 RATs and is located approximately 3500 feet to the north of Units 3 and 4. This arrangement provides

the power supply to the RATs from the Units 1, 2 and 3, 230/500 kV switchyard or directly from the Augusta Newsprint transmission line. Two overhead transmission lines connect the Units 3 and 4, RAT supply, 230 kV switchyard to the two RATs for Unit 3 and the two RATs for Unit 4. One overhead transmission line supplies RAT "A" for Units 3 and 4 and the other overhead transmission line supplies RAT "B" for Units 3 and 4. The RATs may be used to distribute power for plant auxiliaries when the GSUs or UATs are out of service. The Units 1, 2 and 3, 230/500 kV switchyard is used to transmit electrical power output from Unit 3 to the SBAA transmission grid. The 230 kV section of the switchyard is interconnected to the 500 kV section through two, 230/500 kV autotransformers.

A 500 kV air insulated switchyard is located 500 feet north of Unit 4 and 1500 feet to the west of the Units 1, 2 and 3, 230/500 kV switchyard. The Unit 4, 500kV switchyard is interconnected to the 500 kV section of the Units 1, 2 and 3, 230/500 kV switchyard by two overhead lines. These two lines cross over the 230 kV lines for the Unit 3 generator and the supply lines for the Units 3 and 4 RATs. The Unit 4, 500 kV switchyard is used to transmit electrical power output from Unit 4 to the SBAA transmission grid.

The Unit 3 generator is connected to the Units 1, 2 and 3, 230/500 kV switchyard by overhead tie lines that exit the north side of the switchyard and travel west, and then south to the GSU. The Unit 4 generator is connected to the Unit 4, 500kV switchyard by overhead tie lines that exit the south side of the switchyard and travel south to the GSU.

The high voltage circuit breakers in all three switchyards are sized with sufficient continuous current carrying capacity and fault interrupting capability to perform their intended function. The switchyard disconnect switches are rated equal to or greater than the continuous current basis of their associated circuit breakers. The Units 1, 2 and 3, 230/500 kV switchyard, the Unit 4, 500 kV switchyard and the Units 3 and 4, RAT supply, 230 kV switchyard are shown on the offsite power system one-line diagram and the switchyard general arrangement, Figures 8.2-201 and 8.2-202 respectively.

Failure Analysis

VEGP SUP 8.2-1 The design of the offsite power system provides for a robust system that supports reliable power production. Offsite power is not required to meet any safety function, and physical independence is not necessary. The certified design has been granted a partial exemption to GDC 17 by the NRC. Multiple, reliable transmission circuits are provided to support operation of the facility. Neither the accident analysis nor the Probabilistic Risk Assessment has identified the non-safety related offsite power system as risk significant for normal plant operation.

VEGP Units 3 and 4 are supplied with off-site power from the SBAA 230 kV and 500 kV transmission grid via two separate switchyard buses and backfed through

the GSUs. The VEGP switchyards are connected to eight transmission lines. No single transmission line is designated as the preferred circuit, but analysis shows that with any one of these transmission lines out of service, the transmission grid can supply the switchyard with sufficient power for the safety related systems and other auxiliary loads for normal, abnormal and accident conditions on Units 3 and 4.

For the portions of the switchyards associated with VEGP Units 3 and 4, a failure modes and effects analysis (FMEA) confirmed that a single initiating event, such as a transmission line fault, plus a single breaker not operating, does not cause failure of more than one single transmission line, or a loss of offsite power to either Unit 3 or 4 via the GSU. This evaluation recognizes that a single failure of some switchyard components could directly cause the loss of the switchyard feed to the GSU, such as a fault on this feed. Evaluated events include a breaker not operating during a fault condition; a fault on a switchyard bus; a spurious relay trip; and a loss of control power supply. In summary:

- In the event of a fault on a 230 kV or 500 kV transmission line, the associated bus breakers trip and both buses stay energized and both units continue operation.

- In the event of a fault on a 230 kV or 500 kV transmission line concurrent with a stuck bus breaker, the affected bus differential relays cause circuit breakers on the affected bus to trip and thereby isolate the affected bus. Both units continue operation through the non-affected bus.

- In the event of a 230 kV or 500 kV bus fault, bus differential relays sense the fault and the breakers associated with the affected bus trip, thereby isolating the faulted bus. In this event, both units continue normal operation through the non-affected bus.

- In the event of a 230 kV or 500 kV bus fault concurrent with a stuck breaker, the adjacent breaker senses the fault and trips, which isolates the faulted bus. If the stuck breaker is associated with the output of either the Unit 3 or Unit 4 GSU, opening of the adjacent breaker interrupts power to the associated GSU and UATs resulting in a reactor trip. The unaffected unit continues operation through the non-affected bus.

- In the event of transmission line relay mis-operation, both associated switchyard breakers trip, isolating one of the transmission lines from the yard. In this event, both switchyard buses stay energized and both units continue normal operation.

- In the case of a loss of DC control power, the loss of control power to a breaker or to a transmission line primary relay is compensated for by redundant trip coils powered from a different source which allows the protective function to occur. Both units continue normal operation.

- In the event of a fault on the 230 kV Augusta Newsprint line concurrent with a stuck breaker, power will be lost to either the Units 3 and 4 RAT "A" or Units 3 and 4 RAT "B" by tripping the adjacent circuit breaker with the stuck breaker relay protection schemes. In this event, both units continue normal operation and the maintenance power supply to the "A" or "B" RATs will be lost.

The results of the analysis show that a single fault in any section of the 230 kV or 500 kV bus is cleared by the adjacent breakers and does not interrupt operation of the remaining part of the switchyard bus or the connection of the unaffected transmission lines. A bus fault with a stuck breaker associated with the output of either the Unit 3 or Unit 4 GSU causes the loss of power to, and a reactor trip in the associated unit. A bus fault concurrent with any other stuck breaker does not cause a loss of power to either unit.

Transmission System Operator (TSO)

Southern Company Transmission (SCT) is the TSO within the SBAA and is responsible for the safe and reliable operation of the SBAA transmission grid. The SBAA is located within the SERC Reliability Corporation, one of the regional corporations within the North American Electric Reliability Corporation (NERC). SCT has responsibility for Transmission Planning and Operation of the bulk power transmission system. The Operation is performed by the Georgia Transmission Control Center (GCC) in Atlanta, Georgia and Bulk Power Operations (BPO) organization. The BPO control center is also known as the Power Coordination Center (PCC) and is located in Birmingham, Alabama.

SCT and VEGP have an agreement and protocols in place to provide safe and reliable operation of the transmission grid and equipment at VEGP Units 3 and 4. Elements of this agreement are implemented in accordance with the procedures of both parties.

The TSO establishes a voltage schedule for the 230 kV and 500 kV switchyards. VEGP Units 3 and 4, while generating, are expected to supply or absorb reactive power to help regulate voltage in the 230 kV and 500 kV switchyards in accordance with TSO voltage schedule criteria. VEGP maintains switchyard voltage such that steady state voltage on the 26 kV generator terminals is within 0.95 – 1.05 per unit (p.u.) of its nominal value.

VEGP provides the TSO with a nuclear plant interface agreement that specifies the detailed voltage and other requirements necessary to ensure safe and reliable
VEGP SUP 8.2-1 operation of VEGP. The minimum and maximum switchyard voltage at VEGP is maintained in accordance with this interface agreement. These voltage levels are maintained without any reactive power support from VEGP Units 3 and 4.

VEGP SUP 8.2-4 The agreement between VEGP and SCT demonstrates protocols in place for the plant to remain cognizant of grid vulnerabilities so that they can make informed decisions regarding maintenance activities critical to the electrical system. As part

of its operational responsibilities, the PCC continuously monitors real-time power flows and assesses contingency impacts through the use of a state-estimator tool. The PCC/GCC continuously monitors and evaluates grid reliability and switchyard voltages, and informs plant operations of any potential grid instability or voltage inadequacies. They also work to maintain local voltage requirements as required by VEGP. Operational planning studies are also performed using offline power flow study tools to assess near term operating conditions under varying load, generation, and transmission topology patterns. If a condition arises where the SBAA transmission grid cannot supply adequate offsite power, plant operators are notified and appropriate actions are taken.

VEGP plant operations reviews input from the GCC/PCC to make informed decisions regarding plant activities that may affect plant reliability or impacts to the transmission grid. In addition, plant operators inform the PCC/GCC of changes in generation ramp rates and notify them of any developing problems that may impact generation.

VEGP SUP 8.2-2 An agreement between VEGP and SCT sets the requirements for transmission grid studies and analyses. These analyses demonstrate the capability of the offsite power system to support plant start up and shutdown.

VEGP SUP 8.2-3 SCT conducts planning studies of the transmission grid on an ongoing basis. Model data used to perform simulation studies of projected future conditions is maintained and updated as load forecasts and future generation/transmission changes evolve. Studies are updated periodically to assess future system performance in accordance with NERC Reliability Standards. These studies form a basis for identifying future transmission expansion needs.

8.2.1.2 Transformer Area

Add the following paragraph and subsections at the end of the DCD Subsection 8.2.1.2.

VEGP COL 8.2-1 The transformer area for each unit contains the GSU (three single phase transformers plus one spare), three UATs, and two RATs. The two RATs are connected to the Units 3 and 4, RAT supply, 230 kV switchyard via overhead tie lines. The secondary windings (230 kV side) of the Unit 3 GSU are connected in a wye configuration and connected to the Units 1, 2 and 3, 230/500 kV switchyard. The secondary windings (500 kV side) of the Unit 4 GSU are connected in a wye configuration and connected to the Unit 4, 500 kV switchyard.

8.2.1.2.1 Switchyard Protection Relay Scheme

VEGP COL 8.2-2 The switchyards are designed to provide high speed fault clearing while also maintaining high reliability and operational flexibility. The arrangement of the switchyards allow for isolation of components and buses, while preserving VEGP's connection to the grid.

Under normal operating conditions all 230 kV and 500 kV circuit breakers and all bus sectionalizing motor operated disconnect switches are closed and all bus sections are energized.

Each 230 kV and 500 kV transmission line is protected by two independent protection schemes (primary and secondary) to achieve high speed clearing for a fault anywhere on the line and to provide remote back-up protection for remote faults. Each scheme has a pilot protection package and a stand alone step distance line protection package. The breaker failure scheme is initiated by either of the primary or secondary protection schemes and operates through a timing relay, and should a breaker fail to trip within the time setting of its timing relay, the associated breaker failure trip relay will trip and lock out all necessary breakers to isolate the faulted area.

8.2.1.3 Switchyard Control Building

VEGP COL 8.2-1 A separate control building is provided to serve the requirements of each of the three high voltage switchyards. Each control building houses switchyard batteries (redundant battery systems are housed in separate battery rooms and appropriately ventilated) and accommodates a sufficient number of relay/control panels.

The 230 kV and 500 kV switchyard breakers associated with the GSU and RATs are under the functional control of the plant. Transmission line circuit breakers and switches in the switchyards are under the control of the GCC. The 230 kV and 500 kV disconnect switches associated with the GSU and RATs are under the control of the plant. All plant switchyard switching is coordinated between the GCC and the VEGP control room operators.

8.2.1.4 Switchyard and Transmission Lines Testing and Inspection

An agreement between VEGP and SCT for development, maintenance, calibration, testing and modification of transmission lines, switchyards, transformer yards and associated transmission equipment, provides the procedure, policy and organization to carry out maintenance, calibration, testing and inspection of transmission lines and switchyards.

This agreement defines the interfaces and working relationship between VEGP and SCT. As a service to VEGP, SCT performs maintenance, calibration, and testing of VEGP transformer assets at Southern Company nuclear sites. VEGP and SCT are responsible for control of plant/grid interface activities. For reliability, VEGP and SCT coordinate maintenance and testing of off-site power systems. SCT and GPC establish communication and coordination protocols for restoration of external power supply to the nuclear plant on a priority basis.

For performance of maintenance, testing, calibration and inspection, SCT follows its own field test manuals, vendor manuals and drawings, industry's maintenance practices and observes NERC reliability standards, including the following:

- PRC-005-1 Transmission and Generation Protection System Maintenance and Testing.
- PRC-008-0 Under Frequency Load Shedding Equipment Maintenance Program.
- PRC-011-0 Under Voltage Load Shedding System Maintenance and Testing, and Field Test Procedure.

SCT verifies that these test results demonstrate compliance with design requirements and takes corrective actions as necessary. SCT plans and schedules maintenance activities, notifying the plant and PCC/GCC in advance. SCT also procures and stores necessary spare parts prior to the commencement of inspection, testing, and maintenance activities.

Transmission lines are currently inspected through an aerial inspection program at least six times per year. Four times per year or more, these inspections focus on conductor, hardware and structure condition assessment. Twice per year, the inspection has a specific focus on right of way encroachments and vegetation management. An integrated vegetation management program, consisting of periodic mechanical mowing or hand clearing, and herbicide application, is used to control vegetation within the boundaries of the transmission line rights of way. Patrols to identify and remove danger trees beyond the formal right-of-way, which could adversely affect the operation of the transmission line, are performed twice per year.

In addition to the aerial patrols, each transmission line structure is inspected every six years by ground crew personnel. These crews perform an in-depth, on-site assessment of the structure, conductor, and hardware. Any maintenance work required is noted and scheduled for a follow-up crew if the inspection crew cannot complete the task while on-site.

The interconnecting switchyard, as well as other substation facilities, has multiple levels of inspection and maintenance, including the following:

- Walk throughs and visual inspections of the entire substation facility.

- Relay functional tests.
- Oil sampling of large power transformers. Oil samples are evaluated through the use of gas chromatography and dielectric breakdown analysis.
- Power circuit breakers are subjected to several levels of inspection and maintenance. The frequency of each is a function of the number of operations and the length of time in service. Maintenance leverages the use of external visual inspection of all functional systems, an external test, and an internal inspection. Frequency of the various maintenance/ inspection efforts is based on a combination of operating history of the type of breaker, industry practice and manufacturer's recommended maintenance requirements.
- A power factor test (Doble Test) is typically performed on oil filled equipment.
- Thermography is used to identify potential thermal heating issues on buses, conductors, connectors and switches.

8.2.2 GRID STABILITY

Add the following information at the end of DCD Subsection 8.2.2.

VEGP COL 8.2-2 SCT Transmission Planning has performed a transmission system study of the offsite power system. In order to maintain Reactor Coolant Pump (RCP) operation for three seconds following a turbine trip as specified in DCD Subsection 8.2.2, the grid voltage at the high-side of the GSU, and RATs cannot drop more than 15 percent from the pre-trip steady-state voltage.

The study analyzes transient stability utilizing an appropriate load flow case while considering various fault contingencies. In order to complete the forward looking study, the following assumptions are made:

- Grid voltage is 235 kV and 517 kV
- Unit 3 GSU voltage ratio 230/26 kV with a 1.05 p.u. tap setting
- Unit 4 GSU voltage ratio 525/26 kV with a 1.0 p.u. tap setting
- The 2015 summer off-peak case was used as a starting point for the study. The SBAA load was scaled down to a valley load condition of ~38% of peak and the generation was re-dispatched. Valley load conditions provide the most conservative stability results for nuclear units.

The computer analysis was performed using the Siemens Power Technology International Software PSS/E. The analysis examines two conditions:

- Normal Running
- Turbine Trip

Other conditions (i.e. startup and normal shutdown) are bounded by these analyses.

The results of the study conclude that the transmission system remains stable preserving the grid connection, and supporting RCP operation for at least three seconds following a turbine trip under the modeled conditions.

In addition to turbine trip, the grid stability analysis also considered normally-cleared three-phase faults on the transmission system and three-phase faults followed by breaker failure at the VEGP 500 kV and 230 kV switchyards. A 500 kV line out for maintenance with a normally cleared fault on another 500 kV line
VEGP SUP 8.2-4 was also studied. The results demonstrate that the grid remains stable for the loss of the most critical transmission line, the loss of the largest load, and the loss of the largest generating unit. For these contingencies, the generator bus voltages and switchyard voltages (after fault clearing) remain well within the required limits.

The grid stability analysis confirmed that the interface requirements for steady state load, nominal voltage, allowable voltage regulation, nominal frequency, allowable frequency fluctuation, maximum frequency decay rate, and limiting under frequency value for RCP have been met.

VEGP SUP 8.2-5 From January 1, 1992 to November 30, 2007, the average grid availability for the two transmission voltages is as follows:

<u>500 kV Transmission Voltage:</u> The West McIntosh and Scherer 500 kV transmission lines for VEGP have an availability of 99.9 % with 25 forced outages. The 500 kV Thomson transmission line is not in service during this time period. The average frequency of forced line outages since 1992 is less than two per year. The leading cause of forced outages of significant duration is lightning and the resulting damage. Other failures of significant line outage duration are substation equipment problems and storms not associated with lightning.

<u>230 kV Transmission Voltage:</u> The five 230 kV transmission lines for VEGP have an availability of 99.6 % with 26 forced outages. The average frequency of forced line outages since 1992 is less than two per year. The leading cause of forced outages of significant duration is a line structure failure (which only occurred once). Other failures of significant line outage duration are substation equipment problems.

8.2.5 COMBINED LICENSE INFORMATION FOR OFFSITE ELECTRICAL POWER

VEGP COL 8.2-1 This COL item is addressed in Subsections 8.2.1, 8.2.1.1, 8.2.1.2, 8.2.1.3 and 8.2.1.4.

VEGP COL 8.2-2 This COL item is addressed in Subsections 8.2.1.2.1 and 8.2.2.

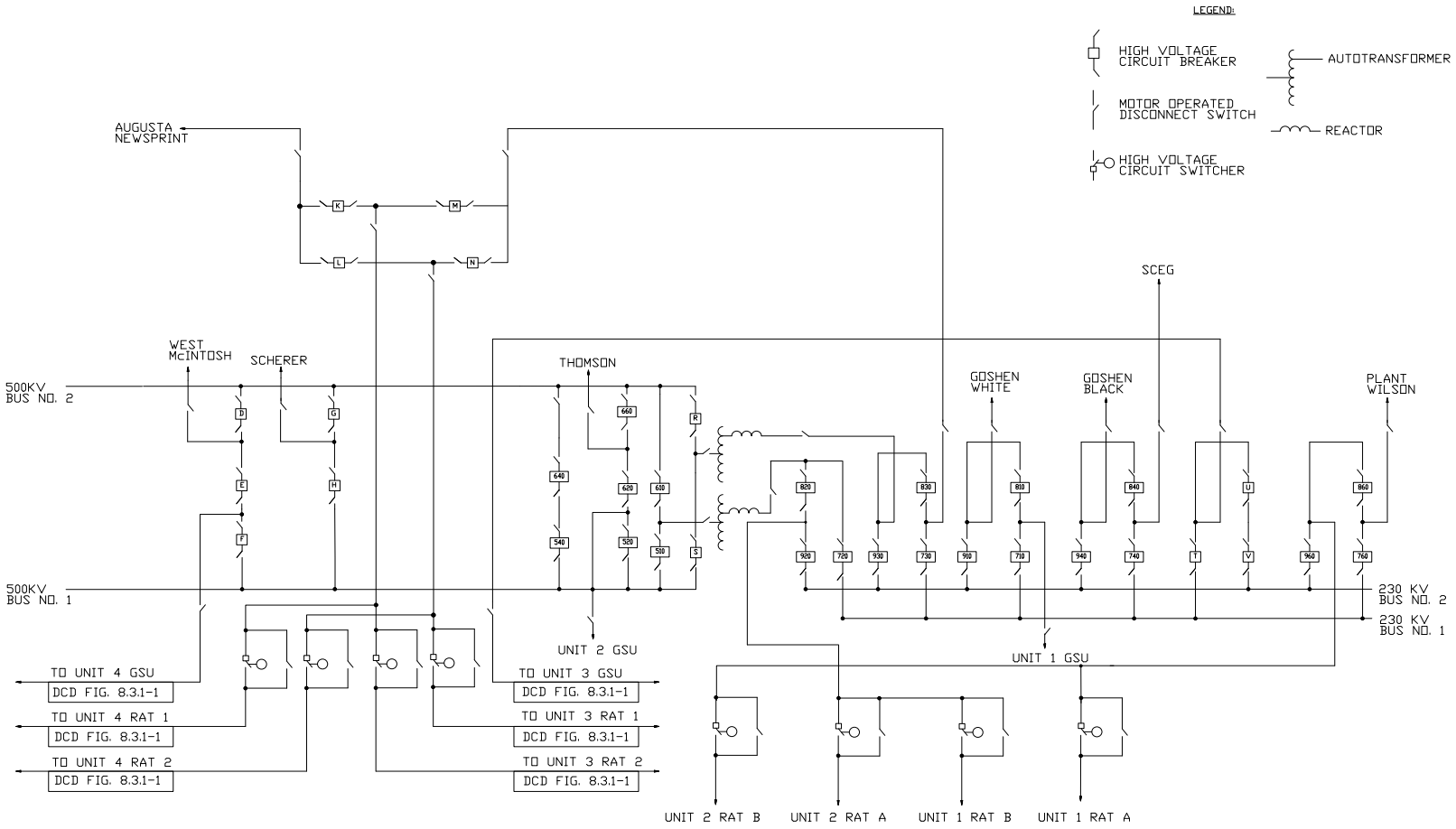

VEGP COL 8.2-1

Figure 8.2-201
Offsite Power System One-Line Diagram

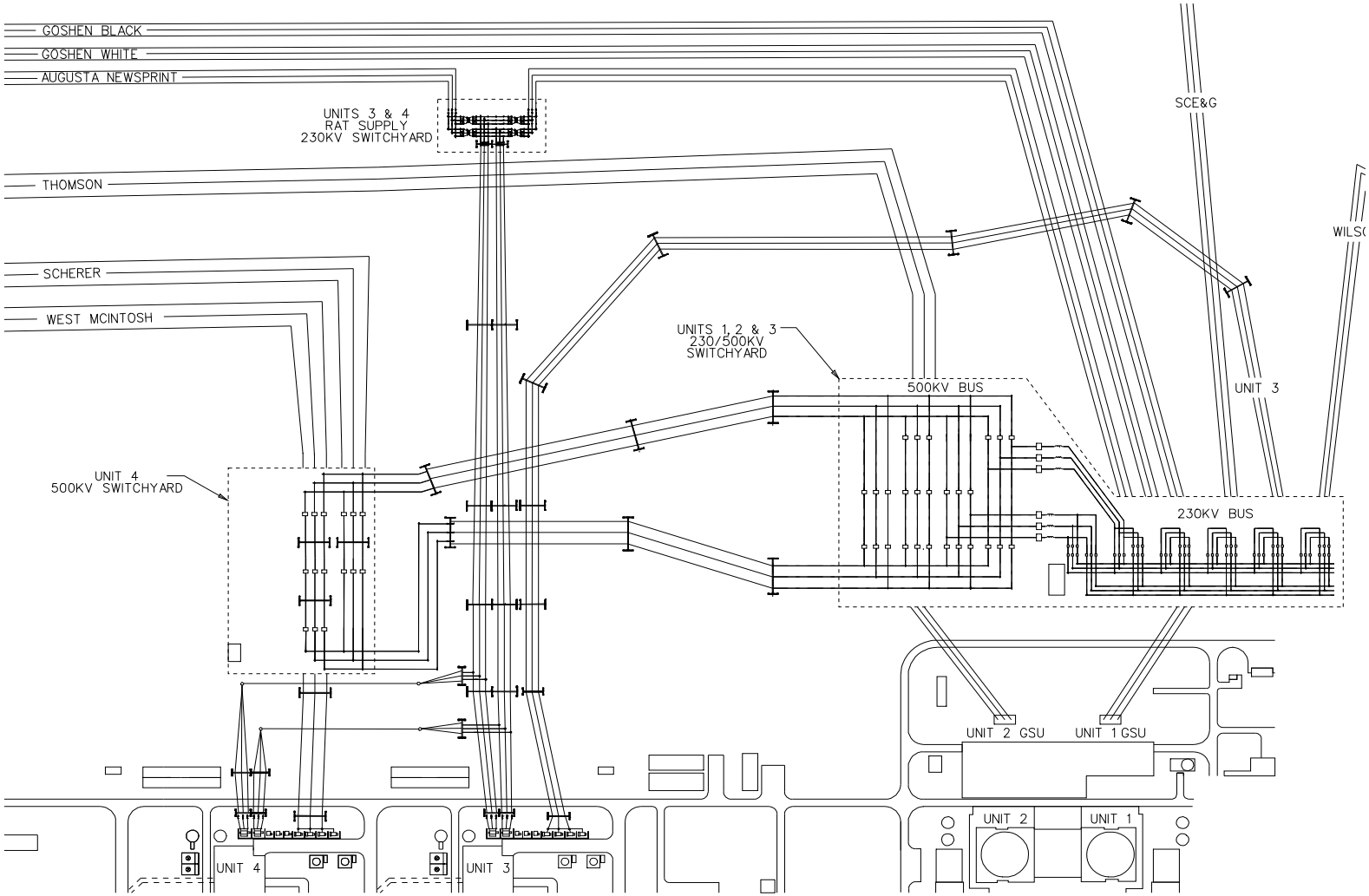

VEGP COL 8.2-1

Figure 8.2-202
Switchyard General Arrangement

8.3 ONSITE POWER SYSTEMS

This section of the referenced DCD is incorporated by reference with the following departures and/or supplements.

8.3.1.1.1 Onsite AC Power System

Add the following to the end of the fourth paragraph of DCD Subsection 8.3.1.1.1.

VEGP SUP 8.3-2 The site specific switchyard and transformer voltage is shown on Figure 8.2-201.

8.3.1.1.2.3 Onsite Standby Power System Performance

Add the following text between the second and third paragraphs of DCD Subsection 8.3.1.1.2.3.

VEGP SUP 8.3-1 The VEGP site conditions provided in Section 2.3 are bounded by the standard site conditions used to rate both the diesel engine and the associated generator in DCD Subsection 8.3.1.1.2.3.

Add the following subsection after DCD Subsection 8.3.1.1.2.3.

8.3.1.1.2.4 Operation, Inspection, and Maintenance

STD COL 8.3-2 Operation, inspection and maintenance procedures consider both the diesel generator manufacturer's recommendations and industry diesel working group recommendations.

8.3.1.1.6 Containment Building Electrical Penetrations

Add the following text at the end of DCD Subsection 8.3.1.1.6.

STD COL 8.3-2 Procedures implement periodic testing of protective devices that provide penetration overcurrent protection. A sample of each different type of overcurrent device is selected for periodic testing during refueling outages. Testing includes:

- Verification of thermal and instantaneous trip characteristics of molded case circuit breakers.
- Verification of long time, short time, and instantaneous trips of medium voltage air circuit breakers.
- Verification of long time, short time, and instantaneous trips of low voltage air circuit breakers.

8.3.1.1.7 Grounding System

Replace the sixth paragraph of DCD Subsection 8.3.1.1.7 with the following information.

VEGP COL 8.3-1 A grounding grid system design within the plant boundary includes step and touch potentials near equipment that are within the acceptable limit for personnel safety. Actual resistivity measurements from soil samples taken at the plant site were analyzed to create a soil model. The ground grid conductor size was then determined using the methodology outlined in IEEE 80, “IEEE Guide for Safety in AC Substation Grounding” (Reference 201) and a grid configuration for the site was created. The grid configuration was modeled in conjunction with the soil model. The resulting step and touch potentials are within the acceptable limits.

8.3.1.1.8 Lightning Protection

Replace the third paragraph of DCD Subsection 8.3.1.1.8 with the following information.

VEGP COL 8.3-1 In accordance with IEEE 665, "IEEE Standard for Generating Station Grounding" (DCD Section 8.3 Reference 18), a lightning protection risk assessment for the buildings comprising the VEGP Units 3 and 4 was performed based on the methodology in NFPA 780 (DCD Section 8.3 Reference 19). The tolerable lightning frequency for each of the buildings was determined to be less than the expected lightning frequency; therefore, lightning protection is required for the VEGP Units 3 and 4 buildings based on the design in accordance with NFPA 780. The zone of protection is based on the elevations and geometry of the structures.

It includes the space covered by a rolling sphere having a radius sufficient enough to cover the building to be protected. The zone of protection method is based on the use of ground masts, air terminals and shield wires. Either copper or aluminum is used for lightning protection. Lightning protection grounding is interconnected with the station or switchyard grounding system.

8.3.2.1.1.1 Class 1E DC Distribution

Add the following text at the end of DCD Subsection 8.3.2.1.1.1.

STD SUP 8.3-1 No site-specific non-Class 1E dc loads are connected to the Class 1E dc system.

8.3.2.1.4 Maintenance and Testing

Add the following text at the end of DCD Subsection 8.3.2.1.4.

STD COL 8.3-2 Procedures are established for inspection and maintenance of Class 1E and non-Class 1E batteries. Class 1E battery maintenance and service testing is performed in conformance with Regulatory Guide 1.129. Batteries are inspected periodically to verify proper electrolyte levels, specific gravity, cell temperature and battery float voltage. Cells are inspected in conformance with IEEE 450 and vendor recommendations.

The clearing of ground faults on the Class 1E dc system is also addressed by procedure. The battery testing procedures are written in conformance with IEEE 450 and the Technical Specifications.

8.3.3 COMBINED LICENSE INFORMATION FOR ONSITE ELECTRICAL POWER

VEGP COL 8.3-1 This COL Item is addressed in Subsections 8.3.1.1.7 and 8.3.1.1.8.

STD COL 8.3-2 This COL Item is addressed in Subsections 8.3.1.1.2.4, 8.3.1.1.6 and 8.3.2.1.4.

8.3.4 REFERENCES

201. Institute of Electrical and Electronics Engineers (IEEE), "IEEE Guide for Safety in AC Substation Grounding," IEEE Std 80-2000, August 4, 2000.

CHAPTER 9

AUXILIARY SYSTEMS

TABLE OF CONTENTS

Section	Title	Page
9.1	FUEL STORAGE AND HANDLING	9.1-1
9.1.4.3.8	Radiation Monitoring	9.1-1
9.1.4.4	Inspection and Testing Requirements	9.1-1
9.1.5.3	Safety Evaluation	9.1-1
9.1.5.4	Inservice Inspection/Inservice Testing	9.1-2
9.1.6	COMBINED LICENSE INFORMATION FOR FUEL STORAGE AND HANDLING	9.1-2
9.2	WATER SYSTEMS	9.2-1
9.2.5	POTABLE WATER SYSTEM	9.2-1
9.2.5.2.1	General Description	9.2-1
9.2.5.2.2	Component Description	9.2-1
9.2.5.3	System Operation	9.2-2
9.2.5.6	Instrumentation Applications	9.2-2
9.2.6	SANITARY DRAINS	9.2-3
9.2.6.2.1	General Description	9.2-3
9.2.6.5	Instrument Application	9.2-3
9.2.8	TURBINE BUILDING CLOSED COOLING WATER SYSTEM	9.2-3
9.2.8.1	Design Basis	9.2-4
9.2.8.1.1	Safety Design Basis	9.2-4
9.2.8.1.2	Power Generation Design Basis	9.2-4
9.2.8.2	System Description	9.2-5
9.2.8.2.1	General Description	9.2-5
9.2.8.2.2	Component Description	9.2-6
9.2.8.2.3	System Operation	9.2-7
9.2.8.3	Safety Evaluation	9.2-8
9.2.8.4	Tests and Inspections	9.2-8
9.2.8.5	Instrument Applications	9.2-8
9.2.9	WASTE WATER SYSTEM	9.2-9
9.2.9.2.1	General Description	9.2-9
9.2.9.2.2	Component Description	9.2-9
9.2.9.5	Instrumentation Applications	9.2-10
9.2.11	RAW WATER SYSTEM	9.2-10
9.2.11.1	Design Basis	9.2-11
9.2.11.1.1	Safety Design Basis	9.2-11
9.2.11.1.2	Power Generation Design Basis	9.2-11
9.2.11.2	System Description	9.2-12

TABLE OF CONTENTS (Continued)

Section	Title	Page
9.2.11.2.1	General Description	9.2-12
9.2.11.2.1.1	RWS River Water Subsystem	9.2-12
9.2.11.2.1.2	RWS Well Water Subsystem	9.2-12
9.2.11.2.2	Component Description	9.2-13
9.2.11.2.2.1	RWS River Water Subsystem	9.2-13
9.2.11.2.2.2	RWS Well Water Subsystem	9.2-14
9.2.11.3	System Operation	9.2-14
9.2.11.3.1	RWS River Water Subsystem	9.2-14
9.2.11.3.2	RWS Well Water Subsystem	9.2-15
9.2.11.4	Safety Evaluation	9.2-15
9.2.11.5	Tests and Inspections	9.2-15
9.2.11.6	Instrumentation Applications	9.2-15
9.2.11.6.1	RWS River Water Subsystem	9.2-15
9.2.11.6.2	RWS Well Water Subsystem	9.2-15
9.2.12	COMBINED LICENSE INFORMATION	9.2-16
9.2.12.1	Potable Water	9.2-16
9.2.12.2	Waste Water Retention Basins	9.2-16
9.2.13	REFERENCES	9.2-16
9.3	PROCESS AUXILIARIES	9.3-1
9.3.7	COMBINED LICENSE INFORMATION	9.3-1
9.4	AIR-CONDITIONING, HEATING, COOLING, AND VENTILATION SYSTEM	9.4-1
9.4.1.4	Tests and Inspection	9.4-1
9.4.7.4	Tests and Inspections	9.4-2
9.4.12	COMBINED LICENSE INFORMATION	9.4-2
9.4.13	REFERENCES	9.4-3
9.5	OTHER AUXILIARY SYSTEMS	9.5-1
9.5.1.2.1.3	Fire Water Supply System	9.5-1
9.5.1.6	Personnel Qualification and Training	9.5-1
9.5.1.8	Fire Protection Program	9.5-1
9.5.1.8.1	Fire Protection Program Implementation	9.5-2
9.5.1.8.1.1	Fire Protection Program Criteria	9.5-2
9.5.1.8.1.2	Organization and Responsibilities	9.5-2
9.5.1.8.2	Fire Brigade	9.5-5
9.5.1.8.2.1	General	9.5-5
9.5.1.8.2.2	Fire Brigade Training	9.5-5
9.5.1.8.2.2.1	Classroom Instruction	9.5-6
9.5.1.8.2.2.2	Retraining	9.5-7

TABLE OF CONTENTS (Continued)

Section	Title	Page
9.5.1.8.2.2.3	Practice	9.5-7
9.5.1.8.2.2.4	Drills	9.5-7
9.5.1.8.2.2.5	Meetings	9.5-8
9.5.1.8.3	Administrative Controls	9.5-8
9.5.1.8.4	Control of Combustible Materials, Hazardous Materials, and Ignition Sources	9.5-9
9.5.1.8.5	Control of Radioactive Materials	9.5-11
9.5.1.8.6	Testing and Inspection	9.5-11
9.5.1.8.7	Personnel Qualification and Training	9.5-12
9.5.1.8.8	Fire Doors	9.5-12
9.5.1.8.9	Emergency Planning	9.5-12
9.5.1.9	Combined License Information	9.5-12
9.5.1.9.1	Qualification Requirements for Fire Protection Program	9.5-12
9.5.1.9.2	Fire Protection Analysis Information	9.5-13
9.5.1.9.3	Regulatory Conformance	9.5-13
9.5.1.9.4	NFPA Exceptions	9.5-13
9.5.1.9.6	Verification of Field Installed Fire Barriers	9.5-13
9.5.1.9.7	Establishment of Procedures to Minimize Risk for Fire Areas Breached During Maintenance	9.5-13
9.5.2.5	Combined License Information	9.5-13
9.5.2.5.1	Offsite Interfaces	9.5-13
9.5.2.5.2	Emergency Offsite Communications	9.5-14
9.5.2.5.3	Security Communications	9.5-14
9.5.4.5.2	Fuel Oil Quality	9.5-14
9.5.4.7	Combined License Information	9.5-15
9.5.4.7.2	Fuel Degradation Protection	9.5-15
9.5.5	REFERENCES	9.5-16
APP. 9A	FIRE PROTECTION ANALYSIS	9A-1
9A.2	FIRE PROTECTION METHODOLOGY	9A-1
9A.2.1	Fire Area Description	9A-1
9A.3.3	Yard Area and Outlying Buildings	9A-1
9A.4	REFERENCES	9A-2

LIST OF TABLES

Number	Title
9.5-201	AP1000 Fire Protection Program Compliance with BTP CMEB 9.5-1
9.5-202	Exceptions to NFPA Standard Requirements

LIST OF FIGURES

Number	Title
9.2-201	Raw Water System Flow Diagram (Sheet 1 and 2)
9A-201	Annex I & II Building Fire Areas Plan at Elevation 100’-0” & 107’-2”

CHAPTER 9

AUXILIARY SYSTEMS

9.1 FUEL STORAGE AND HANDLING

This section of the referenced DCD is incorporated by reference with the following departures and/or supplements.

Add the following subsection after DCD Subsection 9.1.4.3.7.

9.1.4.3.8 Radiation Monitoring

STD COL 9.1-6 Plant procedures require that an operating radiation monitor is mounted on any machine when it is handling fuel. Refer to DCD Subsection 11.5.6.4 for a discussion of augmented radiation monitoring during fuel handling operations.

9.1.4.4 Inspection and Testing Requirements

Add the following paragraph at the end of DCD Subsection 9.1.4.4.

STD COL 9.1-5 The above requirements are part of the plant inspection program for the light load handling system, which is implemented through procedures. In addition to the above inspections, the procedures reflect the manufacturers' recommendations for inspection.

9.1.5.3 Safety Evaluation

Add the following information at the end of DCD Subsection 9.1.5.3.

STD SUP 9.1-1 There are no planned heavy load lifts outside those already described in the DCD. However, over the plant life there may be occasions when heavy loads not presently addressed need to be lifted (i.e., in support of special maintenance/ repairs). For these occasions, special procedures are generated that address, as a minimum, the following:

- The special procedure complies with NUREG-0612.

- A safe load path is determined. Mechanical and/or electrical stops are incorporated in the hardware design to prohibit travel outside the safe load path. Maximum lift heights are specified to minimize the impact of an unlikely load drop.
- Where a load drop could occur over irradiated fuel or safe shutdown equipment, the consequence of the load drop is evaluated. If the evaluation concludes that the load drop is not acceptable, an alternate path is evaluated, or the lift is prohibited.
- The lifting equipment is in compliance with applicable ANSI standards and has factors of safety that meet or exceed the requirements of the applicable standards.
- Operator training is provided prior to actual lifts.
- Inspection of crane components is performed in accordance with the manufacturer recommendations.

STD COL 9.1-6 Plant procedures require that an operating radiation monitor is mounted on any crane when it is handling fuel. Refer to DCD Subsection 11.5.6.4 for a discussion of augmented radiation monitoring during fuel handling operations.

9.1.5.4 Inservice Inspection/Inservice Testing

Add the following paragraph at the end of DCD Subsection 9.1.5.4.

STD COL 9.1-5 The above requirements are part of the plant inspection program for the overhead heavy load handling system, which is implemented through procedures. In addition to the above inspections, the procedures reflect the manufacturers' recommendations for inspection and the NUREG-0612 recommendations.

9.1.6 COMBINED LICENSE INFORMATION FOR FUEL STORAGE AND HANDLING

STD COL 9.1-5 This COL Item is addressed in Subsections 9.1.4.4 and 9.1.5.4.

STD COL 9.1-6 This COL Item is addressed in Subsections 9.1.4.3.8 and 9.1.5.3.

9.2 WATER SYSTEMS

This section of the referenced DCD is incorporated by reference with the following departures and/or supplements.

9.2.5 POTABLE WATER SYSTEM

9.2.5.2.1 General Description

Replace the second paragraph of DCD Subsection 9.2.5.2.1 with the following information.

VEGP COL 9.2-1 The source of water for the potable water system is the site well water subsystem of the Raw Water System (RWS). The potable water system is a common system that consists of a potable water storage tank, two potable water pumps, a jockey pump, and a distribution header that serves the Unit 3 and 4 power blocks and associated buildings. The potable water storage tank is located to the south of the CWS cooling towers. The potable water pumps are housed in a pump house near the tank. The system is not shared with the Units 1 and 2 potable water system. The design of this water supply meets or exceeds the pressure, capacity, and quality requirements in the DCD Subsection 9.2.5.

9.2.5.2.2 Component Description

Add the following text to the end of DCD Subsection 9.2.5.2.2.

Potable Water Storage Tank

The potable water storage tank is sized to provide sufficient potable water to meet
VEGP COL 9.2-1 system demands. The tank is designed and constructed in accordance with the applicable AWWA and Georgia Environmental Protection Division standards.

Potable Water Pumps

Each of the two motor-driven potable water pumps takes suction from the potable water storage tank and discharges to the domestic water distribution header. The pumps are operated as required to meet the potable water demand in the plant and still maintain a minimum 20 psig pressure at the furthermost point in the distribution system.

Jockey Pump

A continuously operated jockey pump is used to supply potable water to the distribution header and maintain the pressure of the system during periods of low demand. This motor-driven pump takes suction from the potable water storage tank and pumps water through the distribution system. A recirculation line to the potable water storage tank is provided to allow continuous running of the jockey pump when system demand is low.

9.2.5.3 System Operation

Replace the first and second paragraphs of DCD Subsection 9.2.5.3 with the following information.

VEGP DEP 9.2-1
VEGP COL 9.2-1

The RWS well water subsystem provides well water to the potable water storage tank. An RWS fill valve is automatically opened and closed based on potable water storage tank level.

VEGP COL 10.4-3

The well water is disinfected at the potable water storage tank. Sodium hypochlorite is used as the disinfectant. A minimum residual chlorine level of 0.2 ppm is maintained in the system in accordance with Georgia Safe Drinking Water standards.

Two potable water pumps and a system jockey pump are used to supply potable water throughout the system. The potable water system pumps are activated sequentially to maintain the required pressure throughout the distribution system. A pressure transmitter is provided downstream of the potable water system pumps to control their start/stop sequences. The jockey pump operates continuously to maintain system pressure.

9.2.5.6 Instrumentation Applications

Add the following text to the end of DCD Subsection 9.2.5.6.

VEGP COL 9.2-1

Instrumentation on the potable water storage tank includes level indication for alarm signals and control signals for the fill valve and the potable water system pumps. The potable water system pumps automatically trip on low tank level and automatically restart when level is restored.

Instrumentation is provided to control the feed of disinfectant to maintain adequate residual chlorine levels in the potable water system.

A pressure transmitter located downstream of the potable water system pumps controls the stop/start sequence of the pumps. The jockey pump runs continuously to maintain system pressure. If the jockey pump is unable to maintain system pressure, a potable water system pump is started. The second potable water system pump starts if the first potable water pump cannot maintain acceptable system pressure.

9.2.6 SANITARY DRAINS

Add the following text to the end of DCD Subsection 9.2.6.

VEGP SUP 9.2-1 The SDS transports wastes to the Units 1 and 2 sewage treatment plant for treatment, dilution, and discharge.

9.2.6.2.1 General Description

Add the following to the third paragraph of DCD Subsection 9.2.6.2.1.

VEGP SUP 9.2-1 The site-specific waste treatment plant for VEGP Units 3 and 4 is the Units 1 and 2 sewage treatment plant. The Units 1 and 2 sewage treatment plant has sufficient capacity to process the sanitary waste from all four units.

9.2.6.5 Instrument Application

Add the following to the first paragraph of DCD Subsection 9.2.6.5.

VEGP SUP 9.2-1 The instrumentation associated with the Unit 1 and 2 sewage treatment plant is sufficient for operation of the treatment plant with waste streams from all four units.

Subsection 9.2.8 is modified using full text incorporation to provide site-specific information to replace the DCD conceptual design information (CDI).

9.2.8 TURBINE BUILDING CLOSED COOLING WATER SYSTEM

VEGP CDI The turbine building closed cooling water system (TCS) provides chemically treated, demineralized cooling water for the removal of heat from nonsafety-related heat exchangers in the turbine building and rejects the heat to the circulating water system.

9.2.8.1 Design Basis

9.2.8.1.1 Safety Design Basis

DCD The turbine building closed cooling water system has no safety-related function and therefore has no nuclear safety design basis.

9.2.8.1.2 Power Generation Design Basis

The turbine building closed cooling water system provides corrosion-inhibited, demineralized cooling water to the equipment shown in Table 9.2.8-1 during normal plant operation.

VEGP CDI During power operation, the turbine building closed cooling water system provides a continuous supply of cooling water to turbine building equipment at a temperature of 105°F or less assuming a circulating water temperature of 100°F or less.

DCD The cooling water is treated with a corrosion inhibitor and uses demineralized water for makeup. The system is equipped with a chemical addition tank to add chemicals to the system.

VEGP CDI The heat sink for the turbine building closed cooling water system is the circulating water system. The heat is transferred to the circulating water through plate type heat exchangers which are components of the turbine building closed cooling water system.

DCD A surge tank is sized to accommodate thermal expansion and contraction of the fluid due to temperature changes in the system.

One of the turbine building closed cooling system pumps or heat exchangers may be unavailable for operation or isolated for maintenance without impairing the function of the system.

The turbine closed cooling water pumps are provided ac power from the 6900V switchgear bus. The pumps are not required during a loss of normal AC power.

9.2.8.2 System Description

9.2.8.2.1 General Description

VEGP CDI

Classification of equipment and components is given in Section 3.2. The system consists of two 100-percent capacity pumps, three 50-percent capacity heat exchangers (connected in parallel), one surge tank, one chemical addition tank and associated piping, valves, controls, and instrumentation. Heat is removed from the turbine building closed cooling water system by the circulating water system via the heat exchangers.

DCD

The pumps take suction from a single return header. Either of the two pumps can operate in conjunction with any two of the three heat exchangers. Discharge flows from the heat exchangers combine into a single supply header. Branch lines then distribute the cooling water to the various coolers in the turbine building. The flow rates to the individual coolers are controlled either by flow restricting orifices or by control valves, according to the requirements of the cooled systems. Individual coolers can be locally isolated, where required, to permit maintenance of the cooler while supplying the remaining components with cooling water. A bypass line with a manual valve is provided around the turbine building closed cooling water system heat exchangers to help avoid overcooling of components during startup/low-load conditions or cold weather operation.

The system is kept full of demineralized water by a surge tank which is located at the highest point in the system. The surge tank connects to the system return header upstream of the pumps. The surge tank accommodates thermal expansion and contraction of cooling water resulting from temperature changes in the system. It also accommodates a minor leakage into or out of the system. Water makeup to the surge tank, for initial system filling or to accommodate leakage from the system, is provided by the demineralized water transfer and storage system. The surge tank is vented to the atmosphere.

A line from the pump discharge header bank to the pump suction header contains valves and a chemical addition tank to facilitate mixing chemicals into the closed loop system to inhibit corrosion in piping and components.

A turbine building closed cooling water sample is periodically taken and analyzed to verify that water quality is maintained.

9.2.8.2.2 Component Description

Surge Tank

A surge tank accommodates changes in the cooling water volume due to changes in operating temperature. The tank also temporarily accommodates leakage into or out of the system. The tank is constructed of carbon steel.

Chemical Addition Tank

The chemical addition tank is constructed of carbon steel. The tank is normally isolated from the system and is provided with a hinged closure for addition of chemicals.

Pumps

Two pumps are provided. Either pump provides the pumping capacity for circulation of cooling water throughout the system. The pumps are single stage, horizontal, centrifugal pumps, are constructed of carbon steel, and have flanged suction and discharge nozzles. Each pump is driven by an ac powered induction motor.

Heat Exchangers

Three heat exchangers are arranged in a parallel configuration. Two of the heat exchangers are in use during normal power operation and turbine building closed cooling water flow divides between them.

VEGP CDI

The heat exchangers are plate type heat exchangers. Turbine building closed cooling water circulates through one side of the heat exchangers while circulating water flows through the other side. During system operation, the turbine building closed cooling water in the heat exchangers is maintained at a higher pressure than the circulating water so leakage of circulating water into the closed cooling water system does not occur. The heat exchangers are constructed of titanium plates with a carbon steel frame.

Valves

DCD

Manual isolation valves are provided upstream and downstream of each pump. The pump isolation valves are normally open but may be closed to isolate the non-operating pump and allow maintenance during system operation. Manual isolation valves are provided upstream and downstream of each turbine building closed cooling water heat exchanger. One heat exchanger is isolated from system flow during normal power operation. A manual bypass valve can be opened to

bypass flow around the turbine building closed cooling water heat exchanger when necessary to avoid low cooling water supply temperatures.

Flow control valves are provided to restrict or shut off cooling water flow to those cooled components whose function could be impaired by overcooling. The flow control valves are air operated and fail open upon loss of control air or electrical power. An air operated valve is provided to control demineralized makeup water to the surge tank for system filling and for accommodating leakage from the system. The makeup valve fails closed upon loss of control air or electrical power.

A TCS heat exchanger can be taken out of service by closing the inlet isolation valve. Water chemistry in the isolated heat exchanger train is maintained by a continuous flow of circulating water through a small bypass valve around the inlet isolation valve.

Backwashable strainers are provided upstream of each TCS heat exchanger. They are actuated by a timer and have a backup starting sequence initiated by a high differential pressure across each individual strainer. The backwash can be manually activated.

Piping

System piping is made of carbon steel. Piping joints and connections are welded, except where flanged connections are used for accessibility and maintenance of components. Nonmetallic piping may be used in accordance with ASME B31.1 and as demonstrated by evaluation.

9.2.8.2.3 System Operation

The turbine building closed cooling water system operates during normal power operation. The system does not operate with a loss of normal ac power.

Startup

VEGP CDI

The turbine building closed cooling water system is placed in operation during the plant startup sequence prior to the operation of systems that require turbine building closed cooling water flow. The system is filled by the demineralized water transfer and storage system through a fill line to the surge tank. The system is placed in operation by starting one of the pumps.

DCD

Normal Operation

During normal operation, one turbine building closed cooling water system pump and two heat exchangers provide cooling to the components listed in

Table 9.2.8-1. The other pump is on standby and aligned to start automatically upon low discharge header pressure.

During normal operation, leakage from the system will be replaced by makeup from the demineralized water transfer and storage system through the automatic makeup valve. Makeup can be controlled either manually or automatically upon reaching low level in the surge tank.

Shutdown

The system is taken out of service during plant shutdown when no longer needed by the components being cooled. The standby pump is taken out of automatic control, and the operating pump is stopped.

9.2.8.3 Safety Evaluation

The turbine building closed cooling water system has no safety-related function and therefore requires no nuclear safety evaluation.

9.2.8.4 Tests and Inspections

Pre-operational testing is described in Chapter 14. The performance, structural, and leaktight integrity of system components is demonstrated by operation of the system.

9.2.8.5 Instrument Applications

Parameters important to system operation are monitored in the main control room. Flow indication is provided for individual cooled components as well as for the total system flow.

Temperature indication is provided for locations upstream and downstream of the turbine building closed cooling water system heat exchangers. High temperature of the cooling water supply alarms in the main control room. Temperature test points are provided at locations to facilitate thermal performance testing.

Pressure indication is provided for the pump suction and discharge headers. Low pressure at the discharge header automatically starts the standby pump.

Level instrumentation on the surge tank provides level indication and both low- and high-level alarms in the main control room. On low tank level, a valve in the makeup water line automatically actuates to provide makeup flow from the demineralized water transfer and storage system.

9.2.9 WASTE WATER SYSTEM

9.2.9.2.1 General Description

Add the following sentence to the fourth paragraph of DCD Subsection 9.2.9.2.1.

VEGP COL 9.2-2 The wastewater retention basin transfer pumps discharge the basin effluent to the blowdown sump which then mixes with the high volume waste stream (circulating water system cooling tower blowdown) prior to discharge to the Savannah River via the outfall piping.

VEGP SUP 9.2-2 Design and routing of the condenser waterbox drains is addressed in Subsection 10.4.5.2.2.

9.2.9.2.2 Component Description

Replace the paragraph in the Waste Water Retention Basin portion of DCD Subsection 9.2.9.2.2 with the following text.

VEGP COL 9.2-2 The waste water retention basin is a lined basin with two compartments and is constructed such that its contents, dissolved or suspended, do not penetrate the liner and leach into the ground. Either of these compartments can receive waste streams for holdup, or if required, for treatment to meet specific environmental discharge requirements.

The configuration and size of the wastewater retention basin allows settling of solids larger than 10 microns. Wastewater can be sampled prior to discharge from the wastewater retention basin. The wastewater retention basins are located northwest of each power block.

Add the following paragraphs at the end of DCD Subsection 9.2.9.2.2.

Basin Transfer Pumps

VEGP COL 9.2-2 Two submersible-type pumps send waste water from the retention basin to the blowdown sump. In the event of oily waste leakage into the retention basin, a

recirculation line is provided to recycle the oil/water waste from the basin to the oil separator. In the event of radioactive contamination, this same line can be used to send the contents of the basin to the liquid radioactive waste system (WLS). Controls are provided for automatic or manual operation of the pumps based on the level of the retention basin.

Blowdown Sump

VEGP SUP 9.2-3 A blowdown sump common to both Units 3 and 4 receives input from the wastewater retention basins and the circulating water system (CWS) cooling tower blowdown. These inputs are mixed with a dechlorination chemical, as needed, to produce an effluent that meets the NPDES permit requirements. This effluent then flows from the blowdown sump to the outfall structure, and then finally to the river.

Plant Outfall

The plant outfall is the final discharge point for Units 3 and 4. Effluent from the blowdown sump mixes with a small waste stream from the liquid radioactive waste system monitor tanks and is discharged to the Savannah River. Dilution water from the raw water system may be supplied to the blowdown sump for radioactive waste discharges when the circulating water cooling tower blowdown is not available.

9.2.9.5 Instrumentation Applications

Add the following at the end of the first paragraph of DCD Subsection 9.2.9.5.

VEGP COL 9.2-2 The wastewater retention basin high-level alarms will indicate the basin level where operator action is required.

VEGP DEP 1.1-1 Add the following subsection after DCD Subsection 9.2.10. DCD Subsections 9.2.11 and 9.2.12 are renumbered as Subsections 9.2.12 and 9.2.13, respectively.

9.2.11 RAW WATER SYSTEM

VEGP SUP 9.2-4 The raw water system consists of two subsystems.

The RWS river water subsystem provides river water for makeup to the CWS cooling tower. The river water subsystem also provides dilution water to the Units 3 and 4 blowdown sump and fill water for the CWS piping.

The RWS well water subsystem provides well water for makeup to the service water system (SWS), potable water system (PWS), fire protection system (FPS), and demineralized water treatment system (DTS). The well water subsystem also provides lubrication and cooling water to the CWS pumps and well water for miscellaneous plant uses.

9.2.11.1 Design Basis

9.2.11.1.1 Safety Design Basis

The RWS serves no safety-related function and therefore has no nuclear safety design basis.

Failure of the RWS or its components does not affect the ability of safety-related systems to perform their intended function.

No interconnections exist between the RWS and any potentially radioactive system.

9.2.11.1.2 Power Generation Design Basis

The RWS river water subsystem provides a continuous supply of river water for the following services:

- CWS fill and makeup.
- Dilution water for radwaste discharge when the CWS is not available. Dilution water is provided to the Units 3 and 4 blowdown sump for this purpose.

The RWS well water subsystem provides well water for the following services:

- SWS fill and makeup.
- PWS fill and makeup.
- DTS feed.
- CWS pump lubrication and cooling water.
- Well water for miscellaneous uses, such as equipment washdown.
- Normal filling and makeup to the FPS primary and secondary fire water storage tanks.

- Alternate supply of water for makeup to the SWS from the secondary fire water tank clearwell.

9.2.11.2 System Description

9.2.11.2.1 General Description

Classification of components and equipment for the RWS is given in Section 3.2.

9.2.11.2.1.1 RWS River Water Subsystem

The source of water for the river water subsystem of the RWS is the Savannah River. The river water subsystem is shown in Figure 9.2-201 (Sheet 1).

For the river water subsystem, the water is drawn through an intake canal that extends from the river to an intake structure. Refer to ESPA Subsection 2.4.8.1 for additional description of the intake canal.

The intake structure is divided into a total of nine independent pump bays. Three bays are dedicated to Unit 3, three bays are dedicated to Unit 4, and the last three bays are empty (to be used for a future unit if pursued). Each Unit 3 and 4 bay is equipped with a river water pump, a trash rack, and a traveling screen. Two bays per unit are equipped with screen wash pumps.

The river water pumps draw untreated river water and forward it to the CWS natural draft cooling tower basins. A side connection provides dilution water to the blowdown sump if required.

9.2.11.2.1.2 RWS Well Water Subsystem

Source water for the well water subsystem is from two deep wells located to the south of the CWS cooling towers. The well water subsystem is shown in Figure 9.2-201 (Sheet 2).

The makeup well water pumps supply well water to the well water storage tank. The well water transfer pumps supply well water to the SWS mechanical draft cooling tower basin and the Demineralized Water Treatment System (DTS). A normally closed connection from the secondary fire water tank clearwell provides an alternate source of makeup to the SWS mechanical draft cooling tower basin by gravity feed.

The well water subsystem also provides well water for filling and makeup to the primary and secondary fire water storage tanks.

PWS and miscellaneous well water users also receive water from the well water subsystem.

9.2.11.2.2 Component Description

9.2.11.2.2.1 RWS River Water Subsystem

Trash Rack

A rack located near the entrance to the pump bays prevents large debris in the river from entering the bays. A trash rake is provided to clear the rack.

Traveling Screens

Traveling screens at the inlet to each of the intake pump bays provide screening of floating and suspended solids in the river water, and minimize entrainment of aquatic life in the water entering each bay. The screens are sized so that the through screen velocity is less than 0.5 feet per second to reduce impingement mortality of aquatic biota. Buildup on the screens is washed off with spray water and sluiced into the river. Each traveling screen is powered by an electric motor powered from the normal AC power system.

Screen Wash Pumps

Two screen wash pumps for each unit provide spray water to remove debris and aquatic biota from the operational traveling screens. One pump operates to provide normal screen wash requirements, with the other pump in standby. The screen wash pumps are vertical shaft, constant speed electric motor-driven pumps. They are powered from the normal AC power system.

River Water Pumps

Three 50 percent river water pumps draw river water and forward it to the CWS natural draft cooling tower basin. Two pumps operate to furnish normal CWS makeup requirements, with one pump in standby. The river water pumps are vertical turbine, constant speed electric motor-driven pumps. They are powered from the normal AC power system.

Piping

The river water piping is designed to accommodate transient effects that may be generated by the starting and stopping of pumps, opening and closing of valves, or other operating events. The system is designed so that high points do not lead to the formation of vapor voids upon loss of system pumping. Air release valves are provided in the makeup pump discharge piping to vent air on pump start.

9.2.11.2.2.2 RWS Well Water Subsystem

Makeup Wells

Two makeup wells supply well water for Units 3 and 4 via makeup well water pumps to a storage tank.

Well Water Tank

The well water tank is supplied by the makeup well water pumps. For normal plant operations, water is provided from this tank via the well water transfer pumps to meet the water demands for both Units 3 and 4.

Makeup Well Water Pumps

Two makeup well water pumps are provided. During normal operation, one makeup well water pump is capable of supplying sufficient well water to the well water tank to support normal well water demands. During periods of high demand, the standby makeup well water pumps will start as required to support demand. The makeup well water pumps are vertical shaft, constant speed, electric motor-driven well pumps. The makeup well water pumps are powered from a diesel-backed power supply.

Well Water Transfer Pumps

Well water transfer pumps are provided downstream of the well water tank. During normal operation, one well water transfer pump taking suction from the well water tank will provide sufficient well water to meet normal demands of both Units 3 and 4. The other well water transfer pumps will remain in standby. During periods of high demand, the standby well water transfer pumps will start as required to support demand. The well water transfer pumps are housed in the well water and PWS pumphouse. The well water transfer pumps are horizontal shaft, centrifugal, constant speed, electric motor-driven pumps powered from a diesel-backed power supply.

9.2.11.3 System Operation

9.2.11.3.1 RWS River Water Subsystem

The RWS river water subsystem operates during normal modes of operation, including startup, power operation, cooldown, shutdown, and refueling.

Makeup flow to the CWS is not normally required during plant shutdown and refueling modes and the river water pumps are shut off. However, the system is operated as required to support filling of the CWS basin and piping and to support dilution of plant discharges during these modes. The RWS river water pumps are not available or required during a loss of offsite power (LOOP).

9.2.11.3.2 RWS Well Water Subsystem

The RWS well water subsystem operates to meet varying well water demands during normal modes of operation, including startup, power operation, cooldown, shutdown, and refueling.

The makeup well water pumps and the well water transfer pumps are available for operation during a LOOP to support the SWS. Only one makeup well water pump and one well water transfer pump is required to support both units SWS during a LOOP.

9.2.11.4 Safety Evaluation

The RWS has no safety-related function, and therefore, requires no nuclear safety evaluation. It has no interconnection with any system that contains radioactive fluids.

9.2.11.5 Tests and Inspections

System performance and structural and pressure integrity of system components is demonstrated by operation of the system, monitoring of system parameters such as flow, level and pressure, and visual inspections.

9.2.11.6 Instrumentation Applications

9.2.11.6.1 RWS River Water Subsystem

Level indication at the CWS cooling tower basin is used to control the makeup valve to maintain the appropriate water level in the basin.

Level indication is provided in the river intake structure pump bays.

Flow indication is provided for the RWS river water pipe lines to the individual CWS cooling tower basins.

Pressure indication is provided for the RWS river water pump discharge and header piping.

9.2.11.6.2 RWS Well Water Subsystem

Level indication is provided at the well water storage tank. High and low level signals provide inputs to the makeup well water pump control logic. A low-low level signal will trip the well water transfer pumps.

Flow indication is provided at the discharge of each well water makeup pump and each well water transfer pump.

Pressure indication is provided at the discharge of each well water makeup and each well water transfer pump.

VEGP DEP 1.1-1

9.2.12 COMBINED LICENSE INFORMATION

9.2.12.1 Potable Water

VEGP COL 9.2-1

This COL item is addressed in Subsections 9.2.5.2.1, 9.2.5.2.2, 9.2.5.3, and 9.2.5.6.

9.2.12.2 Waste Water Retention Basins

VEGP COL 9.2-2

This COL item is addressed in Subsections 9.2.9.2.1, 9.2.9.2.2, and 9.2.9.5.

VEGP DEP 1.1-1

9.2.13 REFERENCES

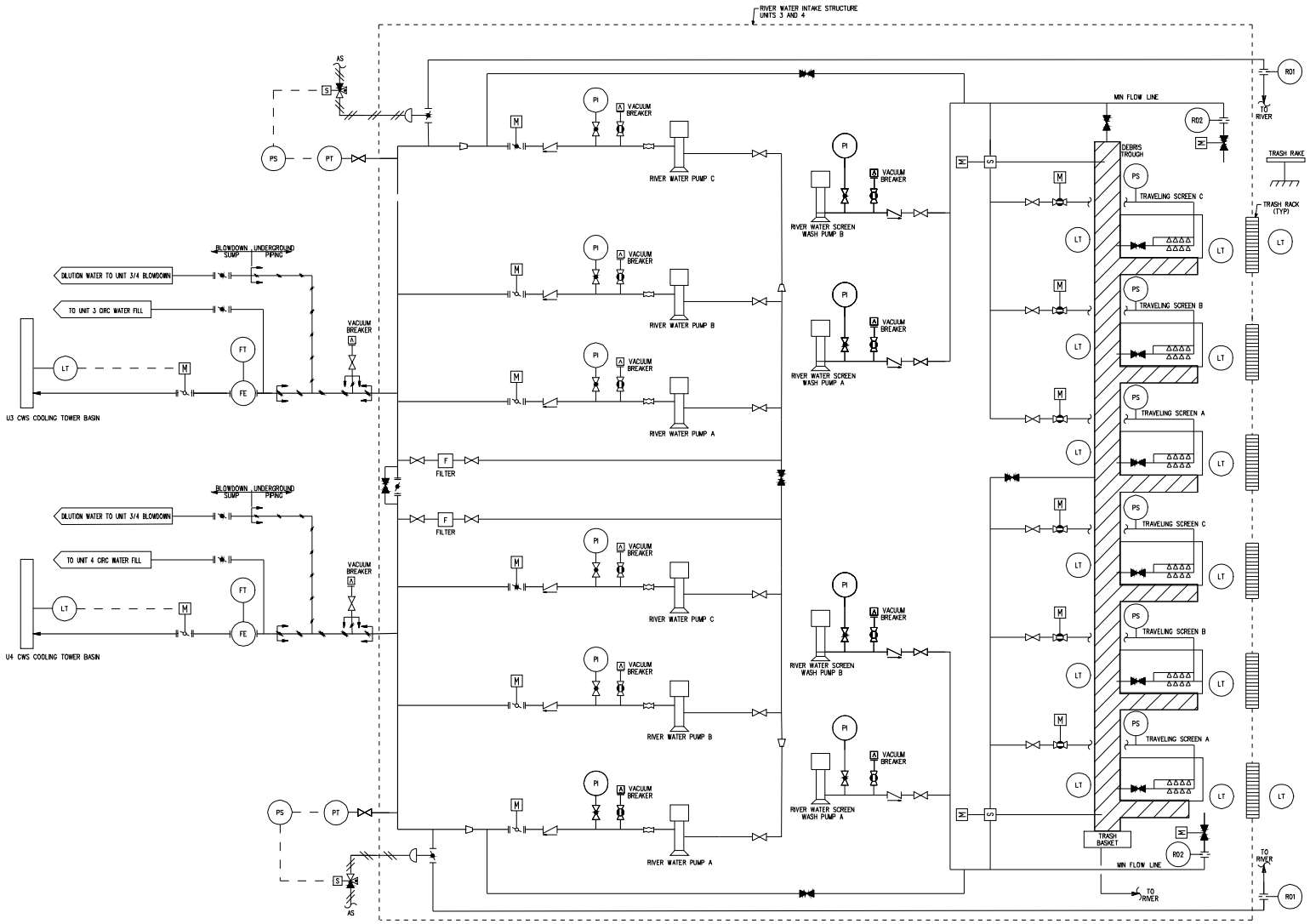

VEGP COL 9.2-1

Figure 9.2-201
Raw Water System River Water Subsystem (Sheet 1 of 2)

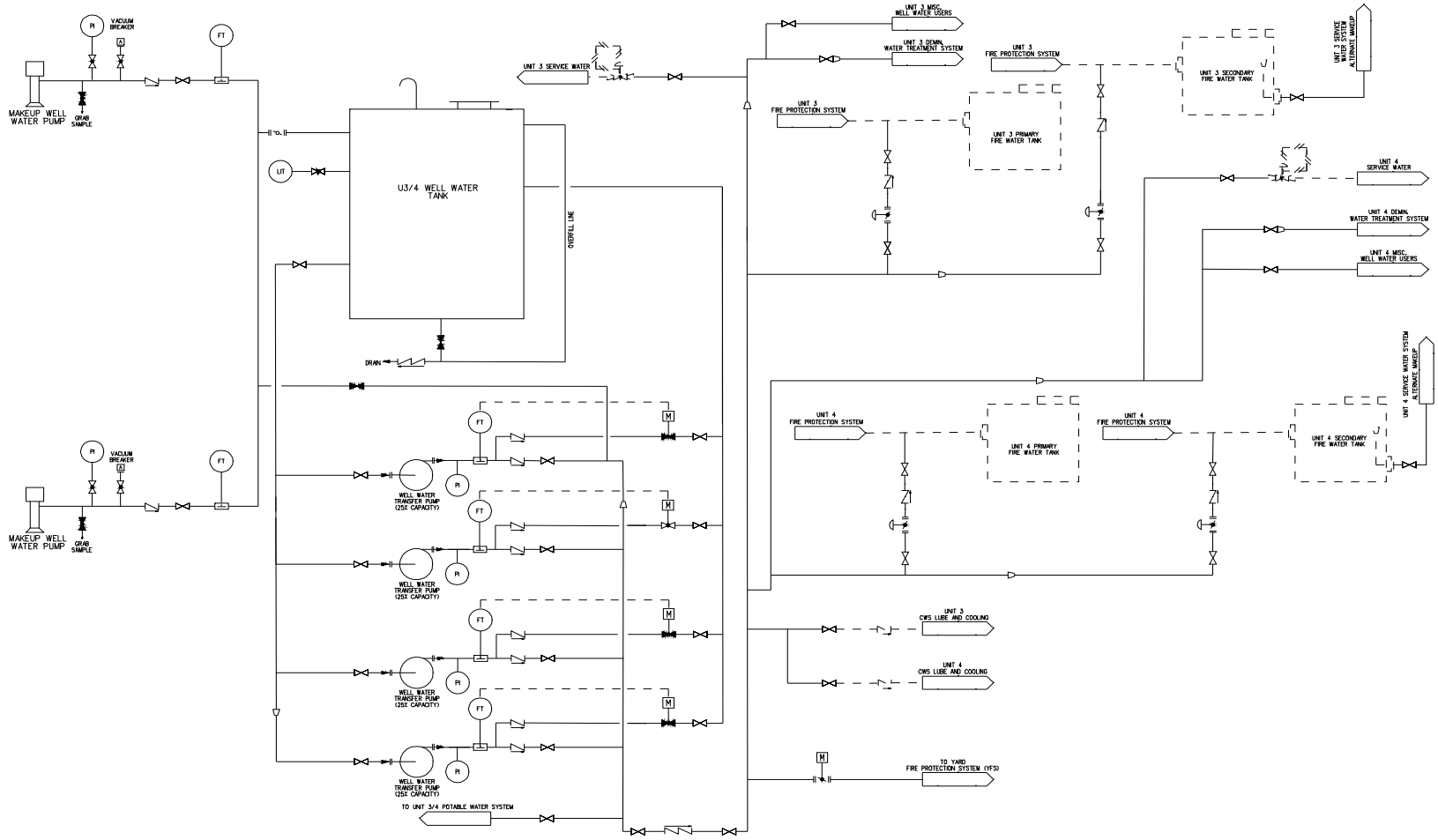

VEGP COL 9.2-1

Figure 9.2-201
Raw Water System Well Water Subsystem (Sheet 2 of 2)

9.3 PROCESS AUXILIARIES

This section of the referenced DCD is incorporated by reference with the following departures and/or supplements:

9.3.7 COMBINED LICENSE INFORMATION

STD COL 9.3-1 This COL Item is addressed below.

Generic Issue 43, and the concerns of Generic Letter 88-14 and NUREG-1275 regarding degradation or malfunction of instrument air supply and safety-related valve failure, are addressed by the training and procedures for operations and maintenance of the instrument air subsystem and air-operated valves.

Plant systems, including the compressed and instrument air system, are maintained in accordance with procedures . Maintenance procedures are discussed in Subsection 13.5.2.2.6. The instrument air supply subsystem components are maintained and tested in accordance with manufacturers' recommendations and procedures. The safety-related air-operated valves are maintained in accordance with manufacturers' recommendations and tested in accordance with plant procedures to allow proper function on loss of air. The instrument air is periodically sampled and tested for compliance with the quality requirements of ANSI/ISA-S7.3-1981.

Operators are provided training on loss of instrument air in accordance with abnormal operating procedures. Plant systems, including the compressed and instrument air system, are operated in accordance with system operating procedures, abnormal operating procedures, and alarm response procedures which are written in accordance with Subsection 13.5.2. The training program for operations and maintenance personnel is discussed in Section 13.2.

9.4 AIR-CONDITIONING, HEATING, COOLING, AND VENTILATION SYSTEM

This section of the referenced DCD is incorporated by reference with the following departures and/or supplements.

9.4.1.4 Tests and Inspection

STD COL 9.4-1a Add the following text at the end of DCD subsection 9.4.1.4.

The main control room/control support area HVAC subsystem of the nuclear island nonradioactive ventilation system (VBS) is tested and inspected in accordance with ASME/ANSI AG-1-1997 and Addenda AG-1a-2000 (Reference 201), ASME N509-1989, ASME N510-1989, and Regulatory Guide 1.140.

The VBS is tested as separate components and as an integrated system. Surveillance tests are performed to monitor the condition of the system. Testing methods include:

- Visual inspection
- Duct and housing leak tests
- Airflow capacity and distribution tests
- Air-aerosol mixing uniformity test
- HEPA filter bank and adsorber bank in-place leak tests
- Duct damper bypass tests
- System bypass tests
- Air heater performance tests
- Laboratory testing of adsorbers
- Ductwork inleakage test

Testing is performed at the frequency provided in Table 1 of ASME N510-1989.

9.4.7.4 Tests and Inspections

Add the following text at the end of DCD Subsection 9.4.7.4.

STD COL 9.4-1a The exhaust subsystem of the containment air filtration system (VFS) is tested and inspected in accordance with ASME/ANSI AG-1-1997 and Addenda AG-1a-2000 (Reference 201), ASME N509-1989, ASME N510-1989, and Regulatory Guide 1.140.

The VFS is tested as separate components and as an integrated system. Surveillance tests are performed to monitor the condition of the system. Testing methods include:

- Visual inspection
- Airflow capacity and distribution tests
- HEPA filter bank and adsorber bank in-place leak tests
- System bypass tests
- Air heater performance tests
- Laboratory testing of adsorbers
- Ductwork inleakage test

Testing is performed at the frequency provided in Table 1 of ASME N510-1989.

9.4.12 COMBINED LICENSE INFORMATION

STD COL 9.4-1a This COL Item is addressed in Subsections 9.4.1.4 and 9.4.7.4.

VEGP COL 9.4-1b Section 6.4 does not identify any toxic emergencies that require the main control room/control support area HVAC to enter recirculation mode.

9.4.13 REFERENCES

201. ASME/ANSI AG-1a-2000, Addenda to ASME AG-1-1997 Code on Nuclear Air and Gas Treatment, Section HA, “Housings.”

9.5 OTHER AUXILIARY SYSTEMS

This section of the referenced DCD is incorporated by reference with the following departures and/or supplements.

9.5.1.2.1.3 Fire Water Supply System

STD SUP 9.5-1 Add the following paragraph at the end of DCD Subsection 9.5.1.2.1.3.

Threads compatible with those used by the off-site fire department are provided on all hydrants, hose couplings and standpipe risers, or a sufficient number of thread adapters compatible with the off-site fire department are provided.

9.5.1.6 Personnel Qualification and Training

STD COL 9.5-1 Add the following paragraph at the end of DCD Subsection 9.5.1.6.

Subsections 9.5.1.8.2 and 9.5.1.8.7 summarize the qualification and training programs that are established and implemented for the Fire Protection Program.

VEGP DEP 1.1-1 Insert the following subsections after DCD Subsection 9.5.1.7. DCD Subsection 9.5.1.8 is renumbered as Subsection 9.5.1.9

9.5.1.8 Fire Protection Program

STD COL 9.5-1 The fire protection program is established such that a fire does not prevent safe shutdown of the plant and does not endanger the health and safety of the public. Fire protection at the plant uses a defense-in-depth concept that includes fire prevention, detection, control and extinguishing systems and equipment, administrative controls and procedures, and trained personnel. These defense-in-depth principles are achieved by meeting the following objectives:

- Prevent fires from starting.
- Detect rapidly, control, and extinguish promptly those fires that do occur.

- Provide protection for structures, systems, and components important to safety so that a fire that is not promptly extinguished by the fire suppression activities does not prevent the safe shutdown of the plant.

- Minimize the potential for radiological releases.

9.5.1.8.1 Fire Protection Program Implementation

As indicated in Table 13.4-201, the required elements of the fire protection program are fully operational prior to receipt of new fuel for buildings storing new fuel and adjacent fire areas that could affect the fuel storage area in that reactor unit. Other required elements of the fire protection program described in this section are fully operational prior to initial fuel loading in that reactor unit.

Elements of the fire protection program are reviewed on a frequency established by procedures and updated as necessary.

9.5.1.8.1.1 Fire Protection Program Criteria

STD COL 9.5-3 The fire protection program is based on the criteria of several industry and regulatory documents referenced in FSAR Subsection 9.5.5 and DCD Subsection 9.5.5, and also based on the guidance provided in Regulatory Guide 1.189. DCD Tables 9.5.1-1 and FSAR Table 9.5-201 provide a cross-reference to information addressing compliance with BTP CMEB 9.5-1.

STD COL 9.5-4 Exceptions to the National Fire Protection Association (NFPA) Standards beyond those included in DCD Table 9.5.1-3, and exceptions taken to the NFPA Standards listed in FSAR Subsection 9.5.5, are identified in FSAR Table 9.5-202.

9.5.1.8.1.2 Organization and Responsibilities

STD COL 9.5-1 The organizational structure of the fire protection personnel is discussed in Subsection 13.1.1.2.10.

The site executive in charge of the fire protection program, through the engineer in charge of fire protection, is responsible for the following:

a. Programs and periodic inspections are implemented to:

   1. Minimize the amount of combustibles in safety-related areas.

   2. Determine the effectiveness of housekeeping practices.

   3. Provide for availability and acceptability of the following:

i. Fire protection system and components.

ii. Manual firefighting equipment.

iii. Emergency breathing apparatus.

iv. Emergency lighting.

v. Portable communication equipment.

STD COL 9.5-8

STD COL 9.5-1

vi. Fire barriers including fire rated walls, floors and ceilings, fire rated doors, dampers, etc., fire stops and wraps, and fire retardant coating. Procedures address the administrative controls in place, including fire watches, when a fire area is breached for maintenance.

STD COL 9.5-1

4. Confirm prompt and effective corrective actions are taken to correct conditions adverse to fire protection and preclude their recurrence.

b. Conducting periodic maintenance and testing of fire protection systems, components, and manual firefighting equipment, evaluating test results, and determining the acceptability of systems under test in accordance with established plant procedures.

c. Designing and selecting equipment related to fire protection.

d. Reviewing and evaluating proposed work activities to identify potential transient fire loads.

e. Managing the plant fire brigade, including:

1. Developing, implementing, and administering the fire brigade training program.

2. Scheduling and conducting fire brigade drills.

3. Critiquing fire drills to determine if training objectives are met.

4. Performing a periodic review of the fire brigade roster and initiating changes as needed.

5. Maintaining the fire training program records for members of the fire brigade and other personnel.

6. Maintaining a sufficient number of qualified fire brigade personnel to respond to fire emergencies for each shift.

f. Developing and conducting the fire extinguisher training program.

g. Implementing a program for indoctrination of personnel gaining unescorted access to the protected area in appropriate procedures which implement the fire protection program, such as fire prevention and fire reporting procedures, plant emergency alarms, including evacuation.

h. Implementing a program for instruction of personnel on the proper handling of accidental events such as leaks or spills of flammable materials.

i. Preparing procedures to meet possible fire situations in the plant and for ensuring assistance is available for fighting fires in radiological areas.

j. Implementing a program that uses a permit system that controls and documents inoperability of fire protection systems and equipment. This program initiates proper notifications and compensatory actions, such as fire watches, when inoperability of any fire protection system or component is identified.

k. Developing and implementing preventive maintenance, corrective maintenance, and surveillance test fire protection procedures.

l. Confirming that plant modifications, new procedures and revisions to procedures associated with fire protection equipment and systems that have significant impact on the fire protection program, are reviewed by an individual who possesses the qualifications of a fire protection engineer.

m. Continuing evaluation of fire hazards during construction or modification of other units on the site. Special considerations, such as fire barriers, fire protection capability, and administrative controls are provided as necessary to protect the operating unit(s) from construction or modification activities.

n. Establishing a fire prevention surveillance plan using the guidance of NFPA 804 (DCD Reference 9.5.5.2), and training plant personnel on that plan.

o. Developing prefire plans and making them available to the fire brigade and control room.

The responsibilities of the engineer in charge of fire protection and his staff are discussed in Subsection 13.1.1.2.10.

9.5.1.8.2 Fire Brigade

9.5.1.8.2.1 General

The organization of the fire brigade is discussed in Subsection 13.1.2.1.5.

To qualify as a member of the fire brigade, an individual must meet the following criteria:

a. Has attended the required training sessions for the position occupied on the fire brigade.

b. Has passed an annual physical exam including demonstrating the ability for performing strenuous activity and the use of respiratory protection.

9.5.1.8.2.2 Fire Brigade Training

A training program is established so that the capability to fight fires is developed and documented. The program consists of classroom instruction supplemented with periodic classroom retraining, practice in firefighting, and fire drills. Classroom instruction and training is conducted by qualified individuals knowledgeable in fighting the types of fires that could occur within the plant and its environs and using onsite firefighting equipment. Individual records of training provided to each fire brigade member, including drill critiques, are maintained as part of the permanent plant files for at least three years to document that each member receives the required training.

The fire brigade leader and at least two brigade members per shift have sufficient training and knowledge of plant safety-related systems to understand the effects of fire and fire suppressants on safe shutdown capability.

Personnel assigned as fire brigade members receive formal training prior to assuming brigade duties. The course subject matter is selected to satisfy the requirements of Regulatory Guide 1.189. Course material selection also includes guidance from NFPA 600 (Reference 204) and 1500 (Reference 210) as appropriate. Additional training may also include material selected from NFPA 1404 (Reference 208) and 1410 (Reference 209).

The minimum equipment provided for the fire brigade consists of personal protective equipment such as turnout coats, boots, gloves, hard hats, emergency communications equipment, portable lights, portable ventilation equipment, and portable extinguishers. Self-contained breathing apparatus (SCBA) approved by NIOSH, using full face positive pressure masks, are provided for selected fire brigade, emergency repair, and control room personnel. At least ten masks are provided for fire brigade personnel. At least two extra air bottles are located onsite for each SCBA. An additional onsite 6-hour supply of reserve air is provided to permit quick and complete replenishment of exhausted supply air bottles. DCD Subsection 6.4.2.3 discusses the portable breathing apparatus for

control room personnel. Additional SCBAs are provided near the personnel containment entrance for the exclusive use of the fire brigade. The fire brigade leader has ready access to keys for any locked fire doors.

The on-duty shift manager has responsibility for taking certain actions based on an assessment of the magnitude of the fire emergency. These actions include safely shutting down the plant, making recommendations for implementing the Emergency Plan, notification of emergency personnel, and requesting assistance from off-duty personnel, if necessary. Emergency Plan consideration of fire emergencies includes the guidance of Regulatory Guide 1.101.

9.5.1.8.2.2.1 Classroom Instruction

Fire brigade members receive classroom instruction in fire protection and firefighting techniques prior to qualifying as members of the fire brigade. This instruction includes:

a. Identification of the types of fire hazards along with their location within the plant and its environs.

b. Identification of the types of fires that could occur within the plant and its environs.

c. Identification of the location of onsite fire fighting equipment and familiarization with the layout of the plant including ingress and egress routes to each area.

d. The proper use of onsite fire fighting equipment and the correct method of fighting various types of fires.

e. Review of each individual’s responsibilities under the Fire Protection Program.

f. Proper use of communication, lighting, ventilation, and emergency breathing equipment.

g. Fire brigade leader direction and coordination of firefighting activities.

h. Toxic and radiological characteristics of expected combustion products.

i. Proper methods of fighting fires inside buildings and confined spaces.

j. Review of firefighting procedures and procedure changes.

k. Indoctrination of the plant firefighting plans, identification of each individual's responsibilities, and review of changes in the firefighting plans resulting from fire protection-related plant modifications.

l. Coordination between the fire brigade and offsite fire departments that have agreed to assist during a major fire onsite is provided to establish responsibilities and duties. Educating the offsite organization in operational precautions when fighting fires on nuclear power plant sites, and awareness of special hazards and the need of radiological protection of personnel.

9.5.1.8.2.2.2 Retraining

Classroom refresher training is scheduled on a biennial basis to supplement retention of the initial training. These sessions may be concurrent with the regular planned meetings.

9.5.1.8.2.2.3 Practice

Practice sessions are held for fire brigade members on the proper method of fighting various types of fires which might occur in the plant. These sessions are scheduled on an annual basis and provide brigade members with team experience in actual fire fighting and the use of emergency breathing apparatus under strenuous conditions encountered in fire fighting.

9.5.1.8.2.2.4 Drills

Fire brigade drills are conducted at least once per calendar quarter for each shift. Each fire brigade member participates in at least two drills annually. Drills are either announced or unannounced. At least one unannounced drill is held annually for each shift fire brigade. At least one drill is performed annually on a “back shift” for each shift’s fire brigade. The drills provide for offsite fire department participation at least annually. Triennially, a randomly selected, unannounced drill shall be conducted and critiqued by qualified individuals independent of the plant staff. Training objectives are established prior to each drill and reviewed by plant management. Drills are critiqued on the following points:

a. Assessment of fire alarm effectiveness.

b. Assessment of time required to notify and assemble the fire brigade.

c. Assessment of the selection, placement, and use of equipment.

d. Assessment of the fire brigade leader’s effectiveness in directing the firefighting effort.

e. Assessment of each fire brigade member’s knowledge of firefighting strategy, procedures, and simulated use of equipment.

f. Assessment of the fire brigade’s performance as a team.

Performance deficiencies identified, based on these assessments, are used as the basis for additional training and repeat drills. Unsatisfactory drill performance is followed by a repeat drill within 30 days.

9.5.1.8.2.2.5 Meetings

Regular planned meetings are held at least quarterly for the fire brigade members to review changes in the Fire Protection Program and other subjects as necessary.

9.5.1.8.3 Administrative Controls

Administrative controls for the Fire Protection Program are implemented through plant administrative procedures. Applicable industry publications are used as guidance in developing those procedures.

Administrative controls include procedures to:

a. Control actions to be taken by an individual discovering a fire, such as notification of the control room, attempting to extinguish the fire, and actuation of local fire suppression systems.

b. Control actions to be taken by the control room operator, such as sounding fire alarms, and notifying the shift manager of the type, size, and location of the fire.

c. Control actions to be taken by the fire brigade after notification of a fire, including location to assemble, directions given by the fire brigade leader, the responsibilities of brigade members, such as selection of firefighting and protective equipment, and use of preplanned strategies for fighting fires in specific areas.

d. Control actions to be taken by the security force upon notification of a fire.

e. Define the strategies established for fighting fires in safety-related areas and areas presenting a hazard to safety-related equipment, including the designation of the:

    1. Fire hazards in each plant area/zone covered by a firefighting procedure (prefire plan). Prefire plans use the guidance of NFPA 1620 (Reference 205).

    2. Fire extinguishers best suited for controlling fires with the combustible loadings of each zone and the nearest location of these extinguishers.

    3. Most favorable direction from which to attack a fire in each area in view of the ventilation direction, access hallways, stairs, and doors

that are most likely to be free of fire, and the best station or elevation for fighting the fire. Access and egress routes that involve locked doors are specifically identified in the procedure with the appropriate precautions and methods for access specified.

4. Plant systems that should be managed to reduce the damage potential during a local fire and the location of local and remote controls for such management (e.g., any hydraulic or electrical system in the zone covered by the specific firefighting procedure that could increase the hazards in the area because of overpressurization or electrical hazards).

5. Vital heat-sensitive system components that need to be kept cool while fighting a local fire. Particularly hazardous combustibles that need cooling are designated.

6. Potential radiological and toxic hazards in fire zones.

7. Ventilation system operation that provides desired plant air distribution when the ventilation flow is modified for fire containment or smoke clearing operations.

8. Operations requiring control room and shift manager coordination or authorization.

9. Instructions for plant operators and other plant personnel during a fire.

f. Organize the fire brigade and assign special duties according to job title so that the firefighting functions are covered for each shift by personnel trained and qualified to perform these functions. These duties include command control of the brigade, transporting fire suppression, and support equipment to the fire scenes, applying the extinguishing agent to the fire, communication with the control room, and coordination with offsite fire departments.

9.5.1.8.4 Control of Combustible Materials, Hazardous Materials, and Ignition Sources

The control of combustible materials is defined by administrative procedures. These procedures impose the following controls:

a. Prohibit the storage of combustible materials (including unused ion exchange resins) in areas that contain or expose safety-related equipment, or establish designated storage areas with appropriate fire protection.

b. Govern the handling of and limit transient fire loads such as flammable liquids, wood, and plastic materials in buildings containing safety-related systems or equipment.

c. Assign responsibility to the appropriate supervisor for reviewing work activities to identify transient fire loads.

d. Govern the use of ignition sources by use of a flame permit system to control welding, flame cutting, grinding, brazing and soldering operations, and temporary electrical power cables. A separate permit is issued for each area where such work is done. If work continues over more than one shift, the permit is valid for not more than 24 hours when the plant is operating or for the duration of a particular job during plant shutdown. NFPA 51B (Reference 202) and 241 (Reference 203) are used as guidance.

e. Minimize waste, debris, scrap, and oil spills or other combustibles resulting from a work activity in the safety-related area while work is in progress, and remove the same upon completion of the activity or at the end of each work shift.

f. Govern periodic inspections for accumulation of combustibles for continued compliance with these administrative controls.

g. Prohibit the storage of acetylene-oxygen and other compressed gasses in areas that contain or expose safety-related equipment or the fire protection system that serves those areas. A permit system is required to control the use of this equipment in safety-related areas of the plant.

h. Govern the use and storage of hazardous chemicals in areas that contain or expose safety-related equipment.

i. Control the use of specific combustibles in safety-related areas. Wood used in safety-related areas during maintenance, modification, or refueling operation (such as lay-down blocks or scaffolding) is treated with a flame retardant in accordance with NFPA 703 (Reference 207). Use of wood inside buildings containing systems or equipment important to safety is only permitted when suitable noncombustible substitutes are not available. Equipment or supplies (such as new fuel) shipped in untreated combustible packing containers are unpacked in safety-related areas if required for valid operating reasons. However, combustible materials are removed from the area immediately following unpacking. Such transient combustible material, unless stored in approved containers, is not left unattended during lunch breaks, shift changes, or other similar periods. Loose combustible packing material, such as wood or paper excelsior, or polyethylene sheeting, is placed in metal containers with tight-fitting self-closing metal covers. Only noncombustible panels or flame-retardant tarpaulins or approved materials of equivalent fire-retardant characteristics

are used. Any other fabrics or plastic films used are certified to conform to the large-scale fire test described in NFPA 701 (Reference 206).

j. Govern the control of electrical appliances in areas that contain or expose safety-related equipment.

9.5.1.8.5 Control of Radioactive Materials

The plant is designed with provisions for sampling of liquids resulting from fire emergencies that may contain radioactivity and may be released to the environment. Plant operating procedures require such liquids to be collected, sampled, and analyzed prior to discharge. Liquid discharges are required to be below activity limits prior to discharge.

9.5.1.8.6 Testing and Inspection

Testing and inspection requirements are imposed through administrative procedures. Maintenance or modifications to the fire protection system are subject to inspection for conformation to design requirements. Installation of portions of the system where performance cannot be verified through preoperational tests, such as penetration seals, fire retardant coatings, cable routing, and fire barriers are inspected. Inspections are performed by individuals knowledgeable of fire protection design and installation requirements. Open flame or combustion-generated smoke is not used for leak testing or similar procedures such as air flow determination. Inspection and testing procedures address the identification of items to be tested or inspected, responsible organizations for the activity, acceptance criteria, documentation requirements and sign-off requirements.

Fire protection materials subject to degradation (such as fire stops, seals, and fire retardant coatings are visually inspected periodically for degradation or damage. Fire hoses are hydrostatically tested in accordance with NFPA 1962 (Reference 201). Hoses stored in outside hose stations are tested annually and interior standpipe hoses are tested every three years.

The fire protection system is periodically tested in accordance with plant procedures. Testing includes periodic operational tests and visual verification of damper and valve positions. Fire doors and their closing and latching mechanisms are also included in these procedures.

STD COL 9.5-6 The preoperational testing program describes the procedures for confirming that the as-installed configuration of fire barriers matches the tested configurations. The procedures describe the process for identifying and dispositioning deviations.

9.5.1.8.7 Personnel Qualification and Training

STD COL 9.5-1 The engineer in charge of fire protection is responsible for the formulation and implementation of the fire protection program and meets the qualification requirements listed in Subsection 13.1.1.2.10.

Qualification and training of other plant personnel involved in the fire protection program is governed by plant qualification procedures and is conducted by personnel qualified by training and experience in these areas. These classifications include training personnel, maintenance personnel assigned to work on the fire protection system, and operations personnel assigned to system operation and testing.

9.5.1.8.8 Fire Doors

STD COL 9.5-3 Fire doors separating safety-related areas are self-closing or provided with closing mechanisms and are inspected semiannually to verify that the automatic hold open, release and closing mechanisms and latches are operable. Watertight and missile resistant doors are not provided with closing mechanisms. Fire doors with automatic hold open and release mechanisms are inspected daily to verify that the doorways are free of obstructions.

Fire doors separating safety-related areas are normally closed and latched. Fire doors that are locked closed are inspected weekly to verify position. Fire doors that are closed and latched are inspected daily to ensure that they are in the closed position. Fire doors that are closed and electrically supervised at a continuously manned location are not inspected.

9.5.1.8.9 Emergency Planning

Emergency planning is described in Section 13.3.

VEGP DEP 1.1-1 9.5.1.9 Combined License Information

9.5.1.9.1 Qualification Requirements for Fire Protection Program

STD COL 9.5-1 This COL Item is addressed as follows:

Qualification requirements for individuals responsible for development of the Fire Protection Program are discussed in Subsections 9.5.1.6 and 9.5.1.8.7.

Training of firefighting personnel is discussed in Subsections 9.5.1.8, 9.5.1.8.2, and 9.5.1.8.7.

Administrative procedures and controls governing the Fire Protection Program during plant operation are discussed in Subsections 9.5.1.8.1.2, 9.5.1.8.3, 9.5.1.8.4, 9.5.1.8.5, and 9.5.1.8.6.

Fire protection system maintenance is discussed in Subsection 9.5.1.8.6.

9.5.1.9.2 Fire Protection Analysis Information

VEGP COL 9.5-2 This COL Item is addressed in Subsection 9A.3.3.

9.5.1.9.3 Regulatory Conformance

STD COL 9.5-3 This COL Item is addressed in Subsections 9.5.1.8.1.1, 9.5.1.8.8, and 9.5.1.8.9 and in Table 9.5-201.

9.5.1.9.4 NFPA Exceptions

STD COL 9.5-4 This COL item is addressed in Subsection 9.5.1.8.1.1.

9.5.1.9.6 Verification of Field Installed Fire Barriers

STD COL 9.5-6 This COL Item is addressed in Subsection 9.5.1.8.6.

9.5.1.9.7 Establishment of Procedures to Minimize Risk for Fire Areas Breached During Maintenance

STD COL 9.5-8 This COL item is addressed in Subsection 9.5.1.8.1.2.

9.5.2.5 Combined License Information

9.5.2.5.1 Offsite Interfaces

VEGP COL 9.5-9 This COL Item is addressed in ESPA Emergency Plan Section F.

9.5.2.5.2 Emergency Offsite Communications

VEGP COL 9.5-10 This COL Item is addressed in ESPA Emergency Plan Section F.

9.5.2.5.3 Security Communications

STD COL 9.5-11 This COL Item is addressed in the Physical Security Plan.

Add the following subsection after DCD Subsection 9.5.4.5.1.

9.5.4.5.2 Fuel Oil Quality

STD COL 9.5-13 High fuel oil quality is provided by specification of the required grade and properties of the fuel oil for procurement, by testing of samples of new fuel oil prior to addition into the tanks, and by monitoring the fuel oil for contamination and degradation with periodic testing of samples from the storage tanks in accordance with manufacturer's recommendations.

The fuel oil storage tanks are inspected at least once per 92 days to check for and remove accumulated water.

The fuel oil quality is verified by sampling and testing from the storage tanks at least once per 92 days. New fuel oil is tested prior to its addition to the storage tanks to verify that the sample meets the following minimum requirements:

- Water and sediment content of less than or equal to 0.05 volume percent.
- Kinematic viscosity at 40° C of greater than or equal to 1.9 mm^2/s (1.9 centistokes), but less than or equal to 4.1 mm^2/s (4.1 centistokes).
- Specific gravity as specified by the manufacturer at 16/16° C (60/60° F), or an API gravity at 16° C (60° F), within limits established in accordance with manufacturer's recommendations.

- Tested impurity level of less than 2 mg of insolubles per 100 ml. The analysis is completed within 7 days after obtaining the sample, but may be performed after the addition of new oil.

9.5.4.7 Combined License Information

9.5.4.7.2 Fuel Degradation Protection

STD COL 9.5-13 This COL Item is addressed in Subsection 9.5.4.5.2.

9.5.5 REFERENCES

201. National Fire Protection Association, “Standard for Inspection, Care, and Use of Fire Hose, Couplings, and Nozzles and the Service Testing of Fire Hose,” NFPA 1962, 2003.

202. National Fire Protection Association, “Standard for Fire Prevention During Welding, Cutting, and Other Hot Work,” NFPA 51B, 2003.

203. National Fire Protection Association, “Standard for Safeguarding Construction, Alteration, and Demolition Operations,” NFPA 241, 2004.

204. National Fire Protection Association, “Standard on Industrial Fire Brigades,” NFPA 600, 2005.

205. National Fire Protection Association, “Recommended Practice for Pre-incident Planning,” NFPA 1620, 2003.

206. National Fire Protection Association, “Standard Methods of Fire Tests for Flame Propagation of Textiles and Films,” NFPA 701, 2004.

207. National Fire Protection Association, “Standard for Fire-Retardant Treated Wood and Fire-Retardant Coatings for Building Materials,” NFPA 703, 2006.

208. National Fire Protection Association, “Standard for Fire Service Respiratory Protection Training,” NFPA 1404, 2006.

209. National Fire Protection Association, “Standard on Training for Initial Emergency Scene Operations,” NFPA 1410, 2005.

210. National Fire Protection Association, “Standard on Fire Department Occupational Safety and Health Program,” NFPA 1500, 2007.

STD COL 9.5-3
STD COL 9.5-4

Table 9.5-201[a] (Sheet 1 of 7)
AP1000 Fire Protection Program Compliance with
BTP CMEB 9.5-1

BTP CMEB 9.5-1 Guideline	Paragraph	Comp	Remarks
Fire Protection Program			
1. Direction of fire protection program; availability of personnel.	C.1.a(1)	C	Comply. Subsections 9.5.1.8.1.2 and 13.1.1.2.10 address this requirement.
2. Defense-in-depth concept; objective of fire protection program.	C.1.a(2)	C	Comply. Subsections 9.5.1.8 and 9.5.1.8.1 address this requirement.
3. Management responsibility for overall fire protection program; delegation of responsibility to staff.	C.1.a(3)	C	Comply. Subsections 9.5.1.8.1.2 and 13.1.1.2.10
4. The staff should be responsible for:	C.1.a(3)	C	Comply. Subsection 13.1.1.2.10 addresses this requirement.
a. Fire protection program requirements.			
b. Post-fire shutdown capability.			
c. Design, maintenance, surveillance, and quality assurance of fire protection features.			
d. Fire prevention activities.			
e. Fire brigade organization and training.			
f. Prefire planning.			

STD COL 9.5-3
STD COL 9.5-4

Table 9.5-201[a] (Sheet 2 of 7)
AP1000 Fire Protection Program Compliance with
BTP CMEB 9.5-1

	BTP CMEB 9.5-1 Guideline	Paragraph	Comp	Remarks
5.	The organizational responsibilities and lines of communication pertaining to fire protection should be defined through the use of organizational charts and functional descriptions.	C.1.a(4)	C	Comply. Organization and lines of communication are addressed in Figure 13.1-201. Functional descriptions are addressed in Subsections 13.1.1.2.10, 13.1.1.3.1.3, and 13.1.2.1.5.
6.	Personnel qualification requirements for fire protection engineer, reporting to the position responsible for formulation and implementation of the fire protection program.	C.1.a(5)(a)	C	Comply. Subsection 13.1.1.2.10 addresses this requirement.
7.	The fire brigade members' qualifications should include a physical examination for performing strenuous activity, and the training described in Position C.3.d.	C.1.a(5)(b)	C	Comply. Subsections 9.5.1.8.2.1 and 9.5.1.8.2.2 addresses this requirement.
8.	The personnel responsible for the maintenance and testing of the fire protection systems should be qualified by training and experience for such work.	C.1.a(5)(c)	C	Comply. Subsection 9.5.1.8.7 addresses this requirement.
9.	The personnel responsible for the training of the fire brigade should be qualified by training and experience for such work.	C.1.a(5)(d)	C	Comply. Subsection 9.5.1.8.2.2 addresses this requirement.
10.	The following NFPA publications should be used for guidance to develop the fire protection program: No. 4, No. 4A, No. 6, No. 7, No. 8, and No. 27.	C.1.a(6)	C	Alternate Compliance. The NFPA codes cited in BTP CMEB 9.5-1 are historical. Current NFPA codes are referenced for guidance for the fire protection program. Subsection 9.5.1.8.1.1 addresses this requirement.

STD COL 9.5-3
STD COL 9.5-4

Table 9.5-201[a] (Sheet 3 of 7)
AP1000 Fire Protection Program Compliance with
BTP CMEB 9.5-1

	BTP CMEB 9.5-1 Guideline	Paragraph	Comp	Remarks
11.	On sites where there is an operating reactor, and construction or modification of other units is underway, the superintendent of the operating plant should have a lead responsibility for site fire protection.	C.1.a(7)	C	Comply. Subsection 13.1.1.2.10 addresses this requirement.
Fire Protection Analysis				
14.	Fires involving facilities shared between units should be considered.	C.1.b	C	Comply. The FHA demonstrates the plant's ability to perform safe shutdown functions and minimize radioactive releases to the environment. Postulated fires in shared facilities that do not contain SSCs important to safety and do not contain radioactive materials do not affect these functions.
15.	Fires due to man-made site-related events that have a reasonable probability of occurring and affecting more than one reactor unit should be considered.	C.1.b	C	Comply. Subsections 2.2 and 3.5 establish that these events are not credible.
Fire Suppression System Design Basis				
22.	Fire protection systems should retain their original design capability for potential man-made, site-related events that have a reasonable probability of occurring at a specific plant site.	C.1.c(4)	C	Comply. Subsections 2.2 and 3.5 establish that these events are not credible.
Fire Protection Program Implementation				
26.	The fire protection program for buildings storing new reactor fuel and for adjacent fire areas that could affect the fuel storage area should be fully operational before fuel is received at the site.	C.1.e(1)	C	Comply. Subsection 9.5.1.8.1 addresses this requirement.

STD COL 9.5-3
STD COL 9.5-4

Table 9.5-201[a] (Sheet 4 of 7)
AP1000 Fire Protection Program Compliance with
BTP CMEB 9.5-1

	BTP CMEB 9.5-1 Guideline	Paragraph	Comp	Remarks
27.	The fire protection program for an entire reactor unit should be fully operational prior to initial fuel loading in that unit.	C.1.e(2)	C	Comply. Subsection 9.5.1.8.1 addresses this requirement.
28.	Special considerations for the fire protection program on reactor sites where there is an operating reactor and construction or modification of other units is under way.	C.1.e(3)	C	Comply. Subsection 9.5.1.8.1.2.m addresses this requirement.
29.	Establishing administrative controls to maintain the performance of the fire protection system and personnel.	C.2	C	Comply. Subsection 9.5.1.8.1.2 addresses this requirement.
Fire Brigade				
30.	The guidance in Regulatory Guide 1.101 should be followed as applicable.	C.3.a	C	Comply. Subsection 9.5.1.8.2.2 addresses this requirement.
31.	Establishing site brigade: minimum number of fire brigade members on each shift; qualification of fire brigade members; competence of brigade leader.	C.3.b	C	Comply. Subsection 9.5.1.8.2.2 and 13.1.2.1.5 address this requirement.
32.	The minimum equipment provided for the brigade should consist of turnout coats, boots, gloves, hard hats, emergency communications equipment, portable ventilation equipment, and portable extinguishers.	C.3.c	C	Comply. Subsection 9.5.1.8.2.2 addresses this requirement.
33.	Recommendations for breathing apparatus for fire brigade, damage control, and control room personnel.	C.3.c	C	Comply. Subsection 9.5.1.8.2.2 and DCD Subsection 6.4.3.1 address these requirements.
34.	Recommendations for the fire brigade training program.	C.3.d	C	Comply. Subsection 9.5.1.8.2.2 addresses this requirement.

STD COL 9.5-3
STD COL 9.5-4

Table 9.5-201[a] (Sheet 5 of 7)
AP1000 Fire Protection Program Compliance with
BTP CMEB 9.5-1

	BTP CMEB 9.5-1 Guideline	Paragraph	Comp	Remarks
Quality Assurance Program				
35.	Establishing quality assurance (QA) programs by applicants and contractors for the fire protection systems for safety-related areas; identification of specific criteria for quality assurance programs.	C.4	C	Comply. DCD Subsection 9.5.1.7 and Chapter 17 address this requirement.
Building Design				
50.	Fire doors should be inspected semiannually to verify that automatic hold-open, release, and closing mechanisms and latches are operable.	C.5.a (5)	C	Comply. Subsection 9.5.1.8.8 addresses this requirement.
51.	Alternative means for verifying that fire doors protect the door opening as required in case of fire.	C.5.a (5)	C	Comply. Subsection 9.5.1.8.8 addresses this requirement.
52.	The fire brigade leader should have ready access to keys for any locked fire doors.	C.5.a (5)	C	Comply. Subsection 9.5.1.8.2.2 addresses this requirement.
55.	Stairwells serving as escape routes, access routes for firefighting, or access routes to areas containing equipment necessary for safe shutdown should be enclosed in masonry or concrete towers with a minimum fire resistance rating of 2 hours and self-closing Class B fire doors.	C.5.A (6)	C	Comply. Subsection 9A.3.3 addresses this requirement for miscellaneous buildings located in the yard.
56.	Fire exit routes should be clearly marked.	C.5.a (7)	C	Comply. DCD Subsection 9.5.1.2.1.1 addresses this requirement.
71.	Water drainage from areas that may contain radioactivity should be collected, sampled, and analyzed before discharge to the environment.	C.5.a(14)	C	Comply. Capability is provided. Subsection 9.5.1.8.5 addresses this requirement.

STD COL 9.5-3
STD COL 9.5-4

Table 9.5-201[a] (Sheet 6 of 7)
AP1000 Fire Protection Program Compliance with
BTP CMEB 9.5-1

	BTP CMEB 9.5-1 Guideline	Paragraph	Comp	Remarks
Control of Combustibles				
80.	Use of compressed gases inside buildings should be controlled.	C.5.d (2)	C	Comply. Subsection 9.5.1.8.4.g addresses this requirement.
Lighting and Communication				
111.	A portable radio communications system should be provided for use by the fire brigade and other operations personnel required to achieve safe plant shutdown.	C.5.g (4)	C	Comply. Subsections 9.5.1.8.1.2.a.3.v, 9.5.1.8.2.2, and DCD Subsection 9.5.2.2.1 address this requirement.
Water Sprinkler and Hose Standpipe Systems				
149.	All valves in the fire protection system should be periodically checked to verify position.	C.6.c (2)	C	Comply. Subsection 9.5.1.8.6 addresses this requirement.
157.	The fire hose should be hydrostatically tested in accordance with NFPA 1962. Hoses stored in outside hose houses should be tested annually. The interior standpipe hose should be tested every 3 years.	C.6.c (6)	C	Comply. Subsection 9.5.1.8.6 addresses this requirement.
Primary and Secondary Containment				
174.	Self-contained breathing apparatus should be provided near the containment entrances for fire fighting and damage control personnel. These units should be independent of any breathing apparatus provided for general plant activities.	C.7.a (2)	C	Comply. Subsection 9.5.1.8.2.2 addresses this requirement.
Main Control Room Complex				
180.	Breathing apparatus for main control room operators should be readily available.	C.7.b	C	Comply. DCD Subsection 6.4.2.3 addresses this requirement.

STD COL 9.5-3
STD COL 9.5-4

Table 9.5-201[a] (Sheet 7 of 7)
AP1000 Fire Protection Program Compliance with
BTP CMEB 9.5-1

	BTP CMEB 9.5-1 Guideline	Paragraph	Comp	Remarks
Cooling Towers				
225.	Cooling towers should be of noncombustible construction or so located and protected that a fire will not adversely affect any safety-related systems or equipment.	C.7.q	C	Comply. Subsection 9A.3.3 addresses this requirement.
Storage of Acetylene-Oxygen Fuel Gases				
228.	Gas cylinder storage locations should not be in areas that contain or expose safety-related equipment or the fire protection systems that serve those safety-related areas.	C.8.a	C	Comply. Subsection 9.5.1.8.4.g addresses this requirement.
229.	A permit system should be required to use this equipment in safety-related areas of the plant.	C.8.a	C	Comply. Subsection 9.5.1.8.4.g addresses this requirement.
Storage Areas for Ion Exchange Resins				
230.	Unused ion exchange resins should not be stored in areas that contain or expose safety-related equipment.	C.8.b	C	Comply. Subsection 9.5.1.8.4.a addresses this requirement.
Hazardous Chemicals				
231.	Hazardous chemicals should not be stored in areas that contain or expose safety-related equipment.	C.8.c	C	Comply. Subsection 9.5.1.8.4.h addresses this requirement.

a) This table supplements DCD Table 9.5.1-1.

STD COL 9.5-4

Table 9.5-202[a]
Exceptions to NFPA Standard Requirements

Requirement	AP1000 Exception or Clarification
NFPA 804 contains requirements specific to light water reactors.	Compliance with portions of this standard is as identified within DCD Section 9.5.1 and WCAP-15871. The intake structure is non-combustible construction, does not provide any safety function, and does not contain any equipment important to safety. Automatic sprinkler protection is not warranted and is not provided.

a) This table supplements DCD Table 9.5.1-3.

APPENDIX 9A
FIRE PROTECTION ANALYSIS

This section of the referenced DCD is incorporated by reference with the following departures and/or supplements.

9A.2 FIRE PROTECTION METHODOLOGY

9A.2.1 Fire Area Description

Add the following information at the end of the first paragraph in DCD Subsection 9A.2.1:

VEGP DEP 18.8-1 Figure 9A-201 replaces DCD Figure 9A-3 (Sheet 1), to reflect the relocation of the Operations Support Center.

9A.3.3 Yard Area and Outlying Buildings

Replace the second sentence of subsection 9A.3.3 with the following information.

VEGP COL 9.5-2 Miscellaneous yard areas do not contain safety-related components or systems, do not contain radioactive materials, and are located such that a fire or effects of a fire, including smoke, do not adversely affect any safety-related systems or equipment. Miscellaneous areas include such structures, for example, as maintenance shops, warehouses, the administrative building, training/office centers, and flammable and combustible material storage tanks. The intake structure is nonsafety-related, does not contain any safety-related equipment, and is remotely located from safety-related structures, systems and components. The miscellaneous areas are located outside of the nuclear island, which is separated from the other yard areas by 3-hour fire rated barriers. Fire detection and suppression are provided as determined by the fire hazards analysis and applicable building codes and insurance company loss prevention standards. Water-based fire suppression systems are supplied by a separate yard main that is independent of AP1000 fire loops. The separate yard main is designed and constructed in accordance with applicable NFPA and local codes and applicable insurance company loss prevention standards.

The cooling tower is not used as the ultimate heat sink or for fire protection purposes. Therefore, the guidance specified in BTP CMEB 9.5-1 is not applicable. The cooling tower serves no safety function and has no safety design basis. The cooling tower does not contain any equipment capable of releasing radioactivity to the atmosphere. The cooling tower fill is a PVC material with a

flame spread rating of 25 or less. The cooling tower is remotely located from HVAC air intakes such that smoke and products of combustion do not affect any safety-related plant areas.

STD COL 9.5-3 Stairwells in miscellaneous buildings located in the yard serving as escape routes or access routes for firefighting, are enclosed in masonry or concrete towers with a minimum fire resistance rating of 2 hours and self-closing Class B fire doors.

9A.4 REFERENCES

201. National Fire Protection Association, "Standard for Fire Protection for Advanced Light Water Reactor Electric Generating Plants," NFPA 804, 2001.

Security-Related Information — Withhold Under 10 CFR 2.390(d)
(See Part 9 of this COL Application)

(Note: This figure replaces DCD Figure 9A-3 Sheet 1 of 3.)

VEGP DEP 18.8-1

Figure 9A-201
Annex I and II Building Fire Areas Plan at Elevation 100'-0" and 107'-2"

CHAPTER 10

STEAM AND POWER CONVERSION

TABLE OF CONTENTS

Section	Title	Page
10.1	SUMMARY DESCRIPTION	10.1-1
10.1.3	COMBINED LICENSE INFORMATION ON EROSION-CORROSION MONITORING	10.1-1
10.1.3.1	Erosion-Corrosion Monitoring	10.1-1
10.1.3.1.1	Analysis	10.1-1
10.1.3.1.2	Industry Experience	10.1-1
10.1.3.1.3	Inspections	10.1-1
10.1.3.1.4	Training and Engineering Judgement	10.1-2
10.1.3.1.5	Long-Term Strategy	10.1-2
10.1.3.2	Procedures	10.1-2
10.1.3.2.1	Generic Plant Procedure	10.1-2
10.1.3.2.2	Implementing Procedures	10.1-2
10.1.3.3	Plant Chemistry	10.1-3
10.2	TURBINE-GENERATOR	10.2-1
10.2.2	SYSTEM DESCRIPTION	10.2-1
10.2.3	TURBINE ROTOR INTEGRITY	10.2-1
10.2.3.6	Maintenance and Inspection Program Plan	10.2-1
10.2.6	COMBINED LICENSE INFORMATION ON TURBINE MAINTENANCE AND INSPECTION	10.2-2
10.3	MAIN STEAM SUPPLY SYSTEM	10.3-1
10.3.2.2.1	Main Steam Piping	10.3-1
10.3.5.4	Chemical Addition	10.3-1
10.3.6.2	Material Selection and Fabrication	10.3-1
10.4	OTHER FEATURES OF STEAM AND POWER CONVERSION SYSTEM	10.4-1
10.4.2.2.1	General Description	10.4-1
10.4.2.2.2	Component Description	10.4-1
10.4.5	CIRCULATING WATER SYSTEM	10.4-1
10.4.5.1	Design Basis	10.4-1
10.4.5.1.1	Safety Design Basis	10.4-1
10.4.5.1.2	Power Generation Design Basis	10.4-2
10.4.5.2	System Description	10.4-2
10.4.5.2.1	General Description	10.4-2

TABLE OF CONTENTS (Continued)

Section	Title	Page
10.4.5.2.2	Component Description	10.4-2
10.4.5.2.3	System Operation	10.4-6
10.4.5.3	Safety Evaluation	10.4-8
10.4.5.4	Tests and Inspections	10.4-8
10.4.5.5	Instrumentation Applications	10.4-8
10.4.7.2.1	General Description	10.4-9
10.4.12	COMBINED LICENSE INFORMATION	10.4-10
10.4.12.1	Circulating Water System	10.4-10
10.4.12.2	Condensate, Feedwater and Auxiliary Steam System Chemistry Control.	10.4-10
10.4.12.3	Potable Water	10.4-10

LIST OF TABLES

Number	Title
10.4-201	Supplemental Main Condenser Design Data
10.4-202	Supplemental Design Parameters for Major Circulating Water System Components

LIST OF FIGURES

Number	Title
10.4-201	Circulating Water System Diagram

CHAPTER 10

STEAM AND POWER CONVERSION

10.1 SUMMARY DESCRIPTION

This section of the referenced DCD is incorporated by reference with the following departures and/or supplements.

10.1.3 COMBINED LICENSE INFORMATION ON EROSION-CORROSION MONITORING

Add the following text at the end of DCD Subsection 10.1.3.

10.1.3.1 Erosion-Corrosion Monitoring

STD COL 10.1-1 The flow accelerated corrosion (FAC) monitoring program analyzes, inspects, monitors and trends those nuclear power plant components that are potentially susceptible to erosion-corrosion damage such as carbon steel components that carry wet steam. In addition, the FAC monitoring program considers the information of Generic Letter 89-08 and industry guidelines.

10.1.3.1.1 Analysis

An industry-sponsored program is used to identify the most susceptible components and to evaluate the rate of wall thinning for components and piping potentially susceptible to FAC. Each susceptible component is tracked in a database and is inspected, based on susceptibility. Analytical methods utilize the results of plant-specific inspection data to develop plant-specific correction factors. This correction accounts for uncertainties in plant data, and for systematic discrepancies caused by plant operation. For each piping component, the analytical method predicts the wear rate, and the estimated time until it must be re-inspected, repaired, or replaced. Carbon steel piping (ASME III and B31.1) that is used for single or multi-phase high temperature flow are the most susceptible to erosion-corrosion damage and receive the most critical analysis.

10.1.3.1.2 Industry Experience

Review and incorporation of industry experience provides a valuable supplement to plant analysis. Industry experience is used to update the program by identifying susceptible components or piping features.

10.1.3.1.3 Inspections

Wall thickness measurements establish the extent of wear in a given component, provide data to help evaluate trends, and provide data to refine the predictive

model. Components are inspected for wear using ultrasonic techniques (UT), radiography techniques (RT), or by visual observation. The initial inspections are used as a baseline for later inspections. Each subsequent inspection determines the wear rate for the piping and components and the need for inspection frequency adjustment for those components.

10.1.3.1.4 Training and Engineering Judgement

The FAC program is administered by both trained and experienced personnel. Task specific training is provided for plant personnel that implement the monitoring program. Specific non-destructive examination (NDE) is carried out by personnel qualified in the given NDE method. Inspection data is analyzed by engineers or other experienced personnel to determine the overall effect on the system or component.

10.1.3.1.5 Long-Term Strategy

This strategy focuses on reducing wear rates and performing inspections on the most susceptible locations.

10.1.3.2 Procedures

10.1.3.2.1 Generic Plant Procedure

The FAC monitoring program is governed by procedure. This procedure contains the following elements:

- A requirement to monitor and control FAC.
- Identification of the tasks to be performed and associated responsibilities.
- Identification of the position that has overall responsibility for the FAC monitoring program at each plant.
- Communication requirements between the coordinator and other departments that have responsibility for performing support tasks.
- Quality Assurance requirements.
- Identification of long-term goals and strategies for reducing high FAC wear rates.
- A method for evaluating plant performance against long-term goals.

10.1.3.2.2 Implementing Procedures

The FAC implementing procedures provide guidelines for controlling the major tasks. The plant procedures for major tasks are as follows:

- Identifying susceptible systems.
- Performing FAC analysis.
- Selecting and scheduling components for initial inspection.
- Performing inspections.
- Evaluating degraded components.
- Repairing and replacing components when necessary.
- Selecting and scheduling locations for the follow-on inspections.
- Collection and storage of inspections records.

10.1.3.3 Plant Chemistry

The responsibility for system chemistry is under the purview of the plant chemistry section. The plant chemistry section specifies chemical addition in accordance with plant procedures.

10.2 TURBINE-GENERATOR

This section of the referenced DCD is incorporated by reference with the following departures and/or supplements.

10.2.2 SYSTEM DESCRIPTION

Add the following sentence at the end of the second paragraph of DCD Subsection 10.2.2.

STD SUP 10.2-1 Subsection 3.5.1.3 addresses the probability of generation of a turbine missile for AP1000 plants in a side-by-side configuration.

Add the following statement at the end of DCD Subsection 10.2.2.

STD SUP 10.2-4 Preoperational and startup tests provide guidance to operations personnel to ensure the proper operability of the turbine generator system.

10.2.3 TURBINE ROTOR INTEGRITY

Add the following statement at the end of DCD Subsection 10.2.3.

STD SUP 10.2-5 Operations and maintenance procedures mitigate the following potential degradation mechanisms in the turbine rotor and buckets/blades: pitting, stress corrosion cracking, corrosion fatigue, low-cycle fatigue, erosion, and erosion-corrosion.

10.2.3.6 Maintenance and Inspection Program Plan

Add the following at the end of the third bullet of DCD Subsection 10.2.3.6.

STD SUP 10.2-2 The main steam stop and control valves are exercised at a frequency recommended by the turbine vendor or valve manufacturer.

Add the following at the end of DCD Subsection 10.2.3.6.

STD SUP 10.2-3 The inservice inspection (ISI) program for the turbine assembly provides assurance that rotor flaws that lead to brittle fracture of a rotor are detected. The ISI program also coincides with the ISI schedule during shutdown, as required by the ASME Boiler and Pressure Vessel Code, Section XI, and includes complete inspection of all significant turbine components, such as couplings, coupling bolts, turbine shafts, low-pressure turbine blades, low-pressure rotors, and high-pressure rotors. This inspection consists of visual, surface, and volumetric examinations required by the code.

10.2.6 COMBINED LICENSE INFORMATION ON TURBINE MAINTENANCE AND INSPECTION

Replace the text in DCD Subsection 10.2.6 with the following:

STD COL 10.2-1 A turbine maintenance and inspection program will be submitted to the NRC staff for review prior to fuel load. The program will be consistent with the maintenance and inspection program plan activities and inspection intervals identified in DCD Subsection 10.2.3.6. Plant-specific turbine rotor test data and calculated toughness curves, that support the material property assumptions in the turbine rotor analysis after the fabrication of the turbine will be available for review prior to fuel load.

10.3 MAIN STEAM SUPPLY SYSTEM

This section of the referenced DCD is incorporated by reference with the following departures and/or supplements.

10.3.2.2.1 Main Steam Piping

Add the following at the end of DCD Subsection 10.3.2.2.1.

STD SUP 10.3-1 Operations and maintenance procedures include adequate precautions to avoid steam hammer and relief valve discharge reaction load occurrences.

10.3.5.4 Chemical Addition

Add the following at the end of DCD Subsection 10.3.5.4.

STD SUP 10.3-2 Alkaline chemistry supports maintaining iodine compounds in their nonvolatile form. When iodine is in its elemental form, it is volatile and free to react with organic compounds to create organic iodine compounds, which are not assumed to remain in solution. It is noted that no significant level of organic compounds is expected in the secondary system. The secondary water chemistry, thus, does not directly impact the radioactive iodine partition coefficients.

10.3.6.2 Material Selection and Fabrication

Add the following at the end of DCD Subsection 10.3.6.2.

STD SUP 10.3-3 Appropriate operations and maintenance procedures provide the necessary controls during operation to minimize the susceptibility of components made of stainless steel and nickel-based materials to intergranular stress-corrosion cracking by controlling chemicals that are used on system components.

10.4 OTHER FEATURES OF STEAM AND POWER CONVERSION SYSTEM

This section of the referenced DCD is incorporated by reference with the following departures and/or supplements.

10.4.2.2.1 General Description

Revise the first sentence of the third paragraph of DCD Subsection 10.4.2.2.1 to remove the brackets.

VEGP CDI

The circulating water system (CWS) provides the cooling water for the vacuum pump seal water heat exchangers.

10.4.2.2.2 Component Description

Revise the fourth sentence of the first paragraph of DCD Subsection 10.4.2.2.2 to remove the brackets.

VEGP CDI

Seal water flows through the shell side of the seal water heat exchanger and circulating water flows through the tube side.

Subsection 10.4.5 is modified using full text incorporation to provide site specific information to replace the DCD conceptual design information (CDI).

DCD

10.4.5 CIRCULATING WATER SYSTEM

10.4.5.1 Design Basis

10.4.5.1.1 Safety Design Basis

The circulating water system (CWS) serves no safety-related function and therefore has no nuclear safety design basis.

10.4.5.1.2 Power Generation Design Basis

VEGP CDI

The CWS supplies cooling water to remove heat from the main condensers. The CWS also supplies cooling water to the turbine building closed cooling water system (TCS) heat exchangers and the condenser vacuum pump seal water heat exchangers under varying conditions of power plant loading and design weather conditions.

DCD

10.4.5.2 System Description

10.4.5.2.1 General Description

Classification of components and equipment in the circulating water system is given in Section 3.2.

VEGP COL 10.4-1

The CWS and the cooling tower provide a heat sink for the waste heat exhausted from the steam turbine. Additional cooling is supplied from the CWS through a tap in the main supply header for the TCS heat exchangers and the condenser vacuum pump seal water heat exchangers. CWS design parameters are provided in Table 10.4-201 and Table 10.4-202.

VEGP CDI

The CWS consists of three 33-1/3-percent-capacity circulating water pumps, one hyperbolic natural draft cooling tower (NDCT), and associated piping, valves, and instrumentation.

DCD

Makeup water to the CWS is provided by the raw water system (RWS). In addition, water chemistry is controlled by the turbine island chemical feed system (CFS).

10.4.5.2.2 Component Description

Circulating Water Pumps

VEGP CDI

The three circulating water pumps are vertical, wet pit, single-stage, mixed-flow pumps driven by electric motors. The pumps are mounted in a pump pit, which is attached to the cooling tower basin. The three pump discharge lines connect to a

common header which connects to the two inlet water boxes of the condenser and may also supply cooling water to the TCS and condenser vacuum pump seal water heat exchangers. Each pump discharge line has a motor-operated butterfly valve located between the pump discharge and the main header. This permits isolation of one pump for maintenance and allows for two-pump operation.

Cooling Tower

The hyperbolic NDCT is designed to reject the full-load waste heat to the atmosphere by evaporation as the circulating water passes through the heat exchanger section. The cooling tower is designed to cool the circulating water to 91°F based on a design wet bulb temperature of 80°F.

The cooling tower is located approximately 1000 ft. south of the plant and has a basin water level of approximately 219 ft. MSL. Should a cooling tower basin wall break, little, if any, water would reach the plant because of the remote location of the tower and the grading of the site. The height of the cooling tower is approximately 600 ft., thus, there is no potential for the cooling tower to fall and damage safety related structures or components. Because of the remote location and the height of the cooling towers the plumes will dissipate before they will affect any plant ventilation intake or the plant switchyard. Because of the height of cooling tower it is unlikely there will be fogging near the plant as a result of the cooling tower plume.

Cooling Tower Makeup and Blowdown

DCD The circulating water system makeup is provided by the raw water system.

VEGP CDI Makeup to and blowdown from the CWS is controlled by the makeup and blowdown control valves. The makeup control valves maintain the cooling tower basin level. These valves, along with the turbine island chemical feed system, provide chemistry control in the circulating water in order to maintain a noncorrosive, nonscale-forming condition and limit biological growth in circulating water system components.

DCD **Piping and Valves**

VEGP CDI The underground portions of the CWS piping are constructed of prestressed concrete pressure piping. The remainder of the piping is carbon steel and is coated internally with a corrosion-resistant compound.

Condenser water box drains allow the condenser to be drained to the cooling tower basin.

DCD Motor-operated butterfly valves are provided in each of the circulating water lines at their inlet to and exit from the condenser shell to allow isolation of portions of the condenser.

VEGP CDI Control valves provide regulation of cooling tower makeup and blowdown.

DCD The circulating water system is designed to withstand the maximum operating discharge pressure of the circulating water pumps.

VEGP CDI Piping includes the expansion joints, butterfly valves, condenser water boxes, and tube bundles.

The piping design pressure of the CWS is 115 psig.

DCD **Circulating Water Chemical Injection**

Circulating water chemistry is maintained by the turbine island chemical feed system.

VEGP CDI Turbine island chemical equipment injects the required chemicals into the circulating water downstream of the CWS pumps.

DCD This maintains a noncorrosive, nonscale-forming condition and limits the biological film formation that reduces the heat transfer rate in the condenser and the heat exchangers supplied by the circulating water system.

VEGP COL 10.4-1 The specific chemicals used within the system are determined by the site water conditions and are monitored by plant chemistry personnel.

DCD

The chemicals can be divided into six categories based upon function: biocide, algaecide, pH adjuster, corrosion inhibitor, scale inhibitor, and a silt dispersant. The pH adjuster, corrosion inhibitor, scale inhibitor, and dispersant are metered into the system continuously or as required to maintain proper concentrations. The biocide application frequency may vary with seasons.

VEGP CDI

The algaecide is applied, as necessary, to control algae formation on the cooling tower.

VEGP COL 10.4-1

The following chemicals are used to control circulating water chemistry:

- Biocide - Sodium hypochlorite, sodium bromide, stabilized bromine
- Algaecide - Biocide treatment is adequate for algae control
- pH Adjuster - No pH adjustment expected to be required at anticipated cycles of concentration
- Corrosion Inhibitor - Proprietary blend of phosphonate, phosphinosuccinic oligomer (PSO) and phosphoric acid
- Scale Inhibitor - Phosphonate
- Silt Dispersant - Proprietary tagged high-strength polymer

DCD

Addition of biocide and water treatment chemicals is performed by turbine island chemical feed injection metering pumps and is adjusted as required.

VEGP CDI

Chemical concentrations are measured through analysis of grab samples from the CWS.

DCD

Residual chlorine is measured to monitor the effectiveness of the biocide treatment.

10.4.5.2.3 System Operation

VEGP CDI

The three circulating water pumps take suction from the circulating water pump pit and circulate the water through the tube side of the main condenser, with smaller flows to the TCS, the condenser vacuum pump seal water heat exchangers, and back through the piping discharge network to the NDCT. See Figure 10.4-201. The NDCT cools the circulating water by discharging the water through nozzles in the tower distribution headers. The water is then diffused through fill material to the basin beneath the tower and, in the process, rejects heat to the atmosphere. Provisions are made during freezing weather to minimize the possibility of ice accumulation.

A 100 percent capacity bypass system has also been provided on the warm water inlet to prevent icing of the fill during a freezing weather start-up. When the tower is started during freezing weather, the warm water flow will bypass the fill into the cold water basin through the bypass line. The bypass is normally used only during plant startup in freezing weather or to maintain CWS temperature above 40°F while operating at partial load during periods of freezing weather.

VEGP CDI

The raw water system supplies makeup water to the cooling tower basin to replace water losses due to evaporation, wind drift, and blowdown. A separate connection is also provided between the RWS and CWS to fill the CWS piping.

DCD

A condenser tube cleaning system is installed to clean the circulating water side of the main condenser tubes.

VEGP CDI

Blowdown from the CWS is taken from the discharge of the CWS pumps and is discharged to the plant outfall.

DCD

The circulating water system is used to supply cooling water to the main condenser to condense the steam exhausted from the main turbine.

VEGP CDI

If the circulating water pumps, the cooling tower, or the circulating water piping malfunction such that condenser backpressure rises above the maximum allowable value, the main condenser will no longer be able to adequately support unit operation.

DCD

Cooldown of the reactor may be accomplished by using the power-operated atmospheric steam relief valves or safety valves rather than the turbine bypass system when the condenser is not available.

Passage of condensate from the main condenser into the circulating water system through a condenser tube leak is not possible during power generation operation, since the circulating water system operates at a greater pressure than the condenser.

VEGP CDI

Turbine building closed cooling water in the TCS heat exchangers is maintained at a higher pressure than the circulating water to prevent leakage of the circulating water into the closed cooling water system.

Cooling water to the condenser vacuum pump seal water heat exchangers is supplied from the circulating water system. Cooling water flow from the circulating water system is normally maintained through all four heat exchangers to facilitate placing the spare condenser vacuum pump in service.

DCD

Isolation valves are provided for the condenser vacuum pump seal water heat exchanger cooling water supply lines to facilitate maintenance.

Small circulating water system leaks in the turbine building will drain into the waste water system. Large circulating water system leaks due to pipe failures will be indicated in the control room by a loss of vacuum in the condenser shell. The effects of flooding due to a circulating water system failure, such as the rupture of an expansion joint, will not result in detrimental effects on safety-related equipment since there is no safety-related equipment in the turbine building and the base slab of the turbine building is located at grade elevation. Water from a system rupture will run out of the building through a relief panel in the turbine building west wall before the level could rise high enough to cause damage. Site grading will carry the water away from safety-related buildings.

VEGP CDI

The cooling tower is located so that collapse of the tower has no potential to damage equipment, components, or structures required for safe shutdown of the plant.

DCD

10.4.5.3 Safety Evaluation

The circulating water system has no safety-related function and therefore requires no nuclear safety evaluation.

10.4.5.4 Tests and Inspections

Components of the circulating water system are accessible as required for inspection during plant power generation.

VEGP CDI

The circulating water pumps are tested in accordance with standards of the Hydraulic Institute.

DCD

Performance, hydrostatic, and leakage tests associated with preinstallation and preoperational testing are performed on the circulating water system. The system performance and structural and leaktight integrity of system components are demonstrated by continuous operation.

10.4.5.5 Instrumentation Applications

VEGP CDI

Instrumentation provided indicates the open and closed positions of motor-operated butterfly valves in the circulating water piping. The motor-operated valve at each pump discharge is interlocked with the pump so that the pump trips if the discharge valve fails to reach the full-open position shortly after starting the pump.

Local grab samples are used to periodically test the circulating water quality to limit harmful effects to the system piping and valves due to improper water chemistry.

Pressure indication is provided on the circulating water pump discharge lines.

DCD

A differential pressure transmitter is provided between one inlet and outlet branch to the condenser. This differential pressure transmitter is used to determine the frequency of operating the condenser tube cleaning system (CES).

VEGP CDI

Temperature indication is supplied on the common CWS inlet header to the TCS heat exchanger trains. This temperature is also representative of the inlet cooling water temperature to the main condenser.

A flow element is provided on the common discharge line from the TCS heat exchangers to allow monitoring of the total flow through the TCS heat exchangers. Flow measurement for the raw water makeup to the cooling tower and for the cooling tower blowdown is also provided.

VEGP CDI

Level instrumentation provided in the circulating water pump intake structure activates makeup flow from the RWS to the cooling tower basin when required. Level instrumentation also annunciates a low-water level in the pump structure and a high-water level in the cooling tower basin.

VEGP COL 10.4-1

The circulating water chemistry is controlled by regulating cooling tower blowdown and by chemical addition to maintain the circulating water with an acceptable Langelier Index and is maintained in range established by plant chemistry personnel.

VEGP CDI

The system accomplishes this by regulating the blowdown valve. This regulation causes the tower basin water level to fluctuate. This fluctuation is sensed by a level controller that operates the makeup valve to the cooling tower basin.

DCD

The control approach is to allow the makeup water to concentrate naturally to its upper limit. Provisions are made to add chemicals for pH control.

VEGP CDI

The cycles of concentration at which the cooling tower is operated is dependent on the quality of the cooling tower makeup water. Cooling tower blowdown is discharged to the Savannah River via the waste water system.

DCD

Monitoring of the circulating water system is performed through the data display and processing system. Control functions are performed by the plant control system. Appropriate alarms and displays are available in the control room. See Chapter 7.

10.4.7.2.1 General Description

Replace the last sentence of the sixth paragraph of DCD Subsection 10.4.7.2.1 as follows.

VEGP COL 10.4-2 The oxygen scavenger agent is hydrazine and the pH control agent is methoxypropylamine (MPA). During shutdown conditions, carbohydrazide may be used in place of hydrazine.

Add new paragraph at the end of the DCD Subsection 10.4.7.2.1:

STD SUP 10.4-1 Operations and maintenance procedures include appropriate precautions to avoid steam/water hammer occurrences.

10.4.12 COMBINED LICENSE INFORMATION

10.4.12.1 Circulating Water System

VEGP COL 10.4-1 This COL Item is addressed in Subsection 10.4.5.2.1, 10.4.5.2.2, and 10.4.5.5.

10.4.12.2 Condensate, Feedwater and Auxiliary Steam System Chemistry Control.

VEGP COL 10.4-2 This COL Item is addressed in Subsection 10.4.7.2.1.

10.4.12.3 Potable Water

Replace the entire paragraph for DCD Subsection 10.4.12.3 with the following.

VEGP COL 10.4-3 Potable water is produced on site by the Potable Water System (PWS). Source water for the PWS is from the well water subsystem to the Raw Water System. Sodium hypochlorite is used as the biocide. The PWS is discussed in Subsection 9.2.5.

Table 10.4-201
Supplemental Main Condenser Design Data

	Condenser Data	
VEGP CDI	Circulating water flow	600,000 gpm

Note: This table supplements DCD Table 10.4.1-1.

VEGP COL 10.4-1

Table 10.4-202
Supplemental Design Parameters for Major Circulating Water System Components

Circulating Water Pump	
Quantity	Three per unit
Flow rate (gal/min)	215,180 (note 2)
Natural Draft Cooling Tower	
Quantity	One per unit
Approach temperature (°F)	11
Inlet temperature (°F)	114.9 (note 3)
Outlet temperature (°F)	91
Approximate Temperature range (°F)	25.2
Flow rate (gal/min)	631,100
Heat transfer (Btu/hr)	$7{,}628 \times 10^6$ (note 3)
Wind velocity design (mph)	110
Seismic design criteria per Uniform Building Code	

Notes:

1. This table supplements DCD Table 10.4.5-1.
2. Nominal CWS pump flow rate includes blowdown (14,440 gpm nominal) which is discharged from the pump discharge common header.
3. The inlet temperature (°F) is approximately 114.9°F, as the condenser outlet flow is expected to be cooled by the return flow stream from the TCS.

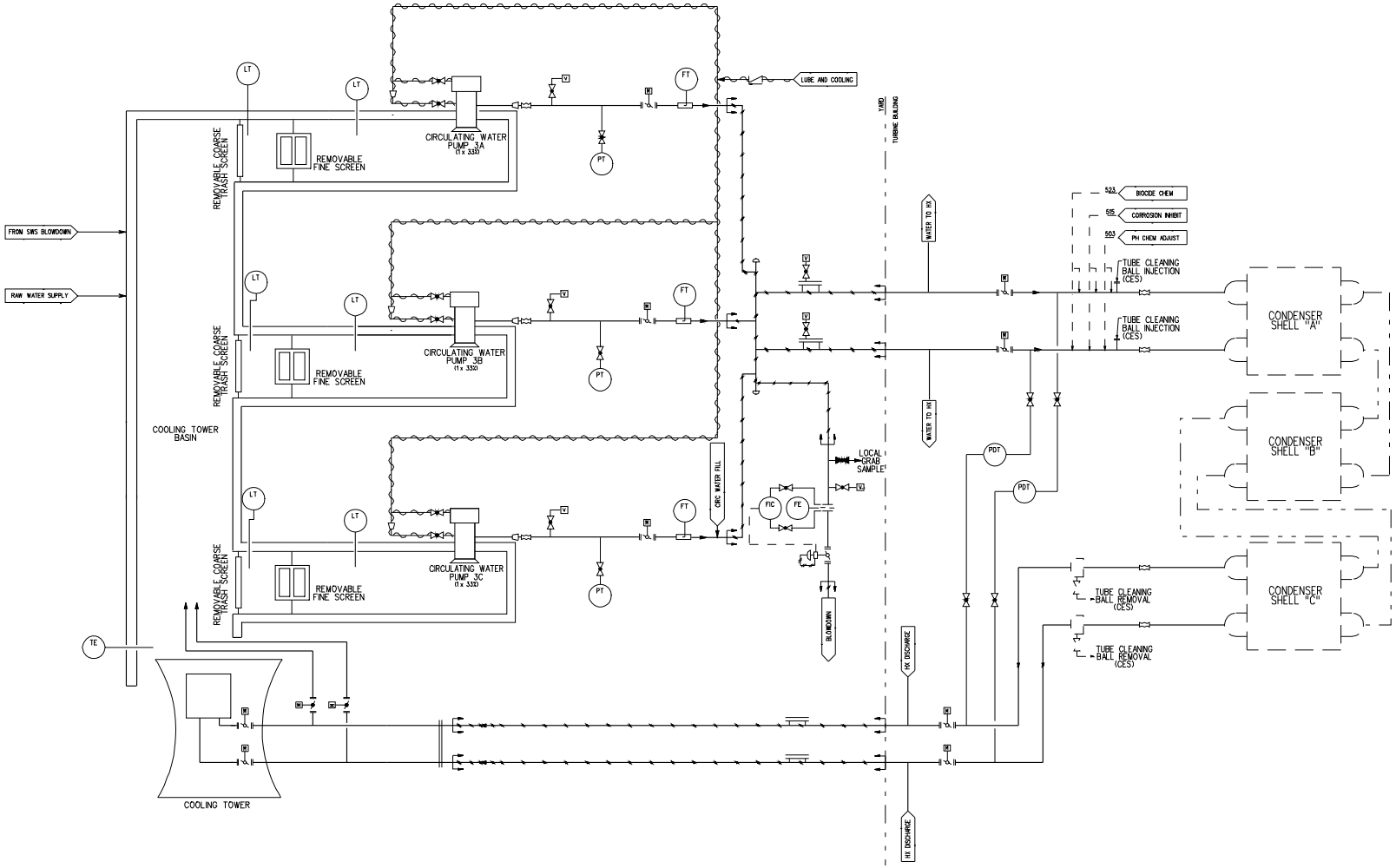

Figure 10.4-201
Circulating Water System Diagram

CHAPTER 11

RADIOACTIVE WASTE MANAGEMENT

TABLE OF CONTENTS

Section	Title	Page
11.1	SOURCE TERMS	11.1-1
11.2	LIQUID WASTE MANAGEMENT SYSTEMS	11.2-1
11.2.1.2.5.2	Use of Mobile and Temporary Equipment	11.2-1
11.2.3.3	Dilution Factor	11.2-2
11.2.3.5	Estimated Doses	11.2-2
11.2.3.6	Quality Assurance	11.2-3
11.2.5	COMBINED LICENSE INFORMATION	11.2-3
11.2.5.1	Liquid Radwaste Processing by Mobile Equipment	11.2-3
11.2.5.2	Cost Benefit Analysis of Population Doses	11.2-3
11.2.6	REFERENCES	11.2-4
11.3	GASEOUS WASTE MANAGEMENT SYSTEM	11.3-1
11.3.3.4	Estimated Doses	11.3-1
11.3.3.6	Quality Assurance	11.3-1
11.3.5	COMBINED LICENSE INFORMATION	11.3-2
11.3.5.1	Cost Benefit Analysis of Population Doses	11.3-2
11.3.6	REFERENCES	11.3-2
11.4	SOLID WASTE MANAGEMENT	11.4-1
11.4.5	QUALITY ASSURANCE	11.4-1
11.4.6	COMBINED LICENSE INFORMATION FOR SOLID WASTE MANAGEMENT SYSTEM PROCESS CONTROL PROGRAM	11.4-1
11.4.6.1	Procedures	11.4-2
11.4.6.2	Third Party Vendors	11.4-2
11.4.6.3	Long Term On-Site Storage Facility	11.4-2
11.4.7	REFERENCES	11.4-3
11.5	RADIATION MONITORING	11.5-1
11.5.1.2	Power Generation Design Basis	11.5-1
11.5.2.4	Inservice Inspection, Calibration, and Maintenance	11.5-1
11.5.3	EFFLUENT MONITORING AND SAMPLING	11.5-1
11.5.4	PROCESS AND AIRBORNE MONITORING AND SAMPLING	11.5-2
11.5.4.1	Effluent Sampling	11.5-2
11.5.4.2	Representative Sampling	11.5-2
11.5.6.5	Quality Assurance	11.5-3

TABLE OF CONTENTS (Continued)

Section	Title	Page
11.5.7	COMBINED LICENSE INFORMATION	11.5-4
11.5.8	REFERENCES	11.5-4

LIST OF TABLES

Number	Title
11.5-201	Minimum Sampling Frequency
11.5-202	Minimum Sensitivities

CHAPTER 11

RADIOACTIVE WASTE MANAGEMENT

11.1 SOURCE TERMS

This section of the referenced DCD is incorporated by reference with no departures or supplements.

11.2 LIQUID WASTE MANAGEMENT SYSTEMS

This section of the referenced DCD is incorporated by reference with the following departures and/or supplements.

11.2.1.2.5.2 Use of Mobile and Temporary Equipment

Add the following information at the end of DCD Subsection 11.2.1.2.5.2:

STD COL 11.2-1 When mobile or temporary equipment is selected to process liquid effluents, the equipment design and testing meets the applicable requirements of Regulatory Guide 1.143. When confirmed through sampling that the radioactive waste contents do not exceed the A_2 quantities for radionuclides specified in Appendix A to 10 CFR Part 71, the mobile or temporary equipment may be installed in the Radwaste Building. When the A_2 quantities are exceeded, liquid effluent is processed in the Seismic Category I auxiliary building.

Mobile or temporary equipment is designed in accordance with the codes and standards listed in Table 1 and Regulatory Position C.1.1.2 of Regulatory Guide 1.143.

Mobile or temporary equipment has the following features:

- Level indication and alarms (high-level) on tanks.
- Screwed connections are permitted only for instrument connections beyond the first isolation valve.
- Remote operated valves are used where operations personnel would be required to frequently manipulate a valve.
- Local control panels are located away from the equipment, in low dose areas.
- Instrumentation readings are accessible from the local control panels (i.e., temperature, flow, pressure, liquid level, etc.).
- Wetted parts are 300 series stainless steel, except flexible hose and gaskets.
- Flexible hose is used only for mobile equipment within the designated “black box” locations between mobile components and at the interface with the permanent plant piping.

- The contents of tanks are capable of being mixed, either through recirculation or with a mixer.
- Grab sample points are located in tanks and upstream and downstream of the process equipment.

Inspection and testing of mobile or temporary equipment is in accordance with the codes and standards listed in Table 1 of Regulatory Guide 1.143 with the following additions:

- After placement in the station, the mobile or temporary equipment is hydrostatically, or pneumatically, tested prior to tie-in to permanent plant piping.
- A functional test, using demineralized water, is performed. Remote operated valves are stroked (open-closed-open or closed-open-closed) under full flow conditions. The proper function of the instrumentation, including alarms, is verified. The operating procedures are verified correct during the functional test.
- Tank overflows are routed to floor drains.
- Floor drains are confirmed to be functional prior to placing mobile or temporary equipment into operation.

11.2.3.3 Dilution Factor

Add the following information at the end of DCD Subsection 11.2.3.3.

VEGP COL 11.2-2 The site-specific dilution factor is addressed in Subsection 11.2.3.5.

11.2.3.5 Estimated Doses

Replace DCD Subsection 11.2.3.5 with the following.

VEGP COL 11.5-3 Subsection 11.2.3 of the referenced ESPA SSAR is incorporated by reference with the following variances and/or supplements.

Add the following at the end of ESPA SSAR Subsection 11.2.3.2.

VEGP COL 11.2-2 ESPA SSAR Table 11.2-7 reports a total body population dose from liquid effluents within 50 miles of VEGP Units 3 and 4 of 0.037 person-rem/year or 0.019 person-rem/year per reactor. In addition, the corresponding thyroid dose has been calculated to be 0.0022 person-rem/year per reactor.

This section adopts NEI 07-11 (Reference 201), which is currently under review by the NRC staff. The application of the methodology of NEI 07-11 satisfies the cost-benefit analysis requirements of 10 CFR Part 50, Appendix I, Section II.D. The augments provided in NEI 07-11 were reviewed and were found not to be cost beneficial due to the low VEGP population doses.

11.2.3.6 Quality Assurance

STD SUP 11.2-1 Add the following to the end of DCD Subsection 11.2.3.6:

Since the impact of radwaste systems on safety is limited, the extent of control required by Appendix B to 10 CFR Part 50 is similarly limited. Thus, a supplemental quality assurance program applicable to design, construction, installation and testing provisions of the liquid radwaste system is established by procedures that complies with the guidance presented in Regulatory Guide 1.143.

11.2.5 COMBINED LICENSE INFORMATION

11.2.5.1 Liquid Radwaste Processing by Mobile Equipment

STD COL 11.2-1 This COL Item is addressed in Subsection 11.2.1.2.5.2.

11.2.5.2 Cost Benefit Analysis of Population Doses

VEGP COL 11.2-2 This COL Item is addressed in Subsections 11.2.3.3 and 11.2.3.5.

11.2.6 REFERENCES

201. NEI 07-11, “Generic Template Guidance for Cost-Benefit Analysis for Radwaste Systems for Light-Water-Cooled Nuclear Power Reactors,” Revision 0, September 2007.

11.3 GASEOUS WASTE MANAGEMENT SYSTEM

This section of the referenced DCD is incorporated by reference with the following departures and/or supplements.

11.3.3.4 Estimated Doses

Replace DCD Subsection 11.3.3.4 with the following.

VEGP COL 11.5-3 Subsection 11.3.3 of the referenced ESPA SSAR is incorporated by reference with the following variances and/or supplements.

Add the following at the end of ESPA SSAR Subsection 11.3.3.2.

VEGP COL 11.3-1 ESPA SSAR Table 11.3-8 reports a total body population dose from gaseous effluents within 50 miles of VEGP Units 3 and 4 of 1.8 person-rem/year or 0.9 person-rem/per reactor. In addition, the corresponding thyroid dose has been calculated to be 3.0 person-rem/year per reactor.

This section adopts NEI 07-11 (Reference 201), which is currently under review by the NRC staff. The application of the methodology of NEI 07-11 satisfies the cost-benefit analysis requirements of 10 CFR Part 50, Appendix I, Section II.D. The augments provided in NEI 07-11 were reviewed and were found not to be cost beneficial due to the low VEGP population doses.

11.3.3.6 Quality Assurance

STD SUP 11.3-1 Add the following to the end of DCD Subsection 11.3.3.6:

Since the impact of radwaste systems on safety is limited, the extent of control required by Appendix B to 10 CFR Part 50 is similarly limited. Thus, a supplemental quality assurance program applicable to design, construction, installation, and testing provisions of the gaseous radwaste system is established by procedures that complies with the guidance presented in Regulatory Guide 1.143.

11.3.5 COMBINED LICENSE INFORMATION

11.3.5.1 Cost Benefit Analysis of Population Doses

VEGP COL 11.3-1 This COL Item is addressed in Subsection 11.3.3.4.

11.3.6 REFERENCES

201. NEI 07-11, "Generic Template Guidance for Cost-Benefit Analysis for Radwaste Systems for Light-Water-Cooled Nuclear Power Reactors," Revision 0, September 2007.

11.4 SOLID WASTE MANAGEMENT

This section of the referenced DCD is incorporated by reference with the following departures and/or supplements.

11.4.5 QUALITY ASSURANCE

Add the following to the end of DCD Subsection 11.4.5:

STD SUP 11.4-1 Since the impact of radwaste systems on safety is limited, the extent of control required by Appendix B to 10 CFR Part 50 is similarly limited. Thus, a supplemental quality assurance program applicable to design, construction, installation and testing provisions of the solid radwaste system is established by procedures that complies with the guidance presented in Regulatory Guide 1.143.

11.4.6 COMBINED LICENSE INFORMATION FOR SOLID WASTE MANAGEMENT SYSTEM PROCESS CONTROL PROGRAM

Add the following information to the end of DCD Subsection 11.4.6.

This COL Item is addressed below.

STD COL 11.4-1 This section adopts NEI 07-10 (Reference 201) which is currently under review by the NRC staff. The Process Control Program (PCP) describes the administrative and operational controls used for the solidification of liquid or wet solid waste and the dewatering of wet solid waste. Its purpose is to provide the necessary controls such that the final disposal waste product meets applicable federal regulations (10 CFR Parts 20, 50, 61, 71, and 49 CFR Part 173), state regulations, and disposal site waste form requirements for burial at a low level waste (LLW) disposal site that is licensed in accordance with 10 CFR Part 61.

Waste processing (solidification or dewatering) equipment and services may be provided by the plant or by third-party vendors. Each process used meets the applicable requirements of the PCP.

No additional onsite radwaste storage is required beyond that described in the DCD.

Table 13.4-201 provides milestones for PCP implementation.

11.4.6.1 Procedures

STD SUP 11.4-1 Operating procedures specify the processes to be followed to ship waste that complies with the waste acceptance criteria (WAC) of the disposal site, 10 CFR 61.55 and 61.56, and the requirements of third party waste processors.

Each waste stream process is controlled by procedures that specify the process for packaging, shipment, material properties, destination (for disposal or further processing), testing to verify compliance, the process to address non-conforming materials, and required documentation.

Where materials are to be disposed of as non-radioactive waste (as described in DCD Subsection 11.4.2.3.3), final measurements of each package are performed to verify there has not been an accumulation of licensed material resulting from a buildup of multiple, non-detectable quantities. These measurements are obtained using sensitive scintillation detectors, or instruments of equal sensitivity, in a low-background area.

Procedures document maintenance activities, spill abatement, upset condition recovery, and training.

Procedures document the periodic review and revision, as necessary, of the PCP based on changes to the disposal site, WAC regulations, and third party PCPs.

11.4.6.2 Third Party Vendors

Third party equipment suppliers and/or waste processors are required to supply approved PCPs. Third party vendor PCPs describe compliance with Regulatory Guide 1.143, Generic Letter 80-09, and Generic Letter 81-39. Third party vendor PCPs are referenced appropriately in the plant PCP before commencement of waste processing.

11.4.6.3 Long Term On-Site Storage Facility

VEGP SUP 11.4-1 Storage space for six-month's volume of packaged waste is provided in the radwaste building. Radioactive waste generated by VEGP Units 3 and 4 will normally be shipped to a licensed disposal facility. However, should disposal facilities not be available, the planned VEGP Units 1 and 2 Low Level Radwaste Storage Facility will be available to provide storage for VEGP Units 3 and 4.

11.4.7 REFERENCES

201. NEI 07-10, “Generic FSAR Template Guidance for Process Control Program (PCP) Description,” Revision 1, October 2007.

11.5 RADIATION MONITORING

This section of the referenced DCD is incorporated by reference with the following departures and/or supplements.

11.5.1.2 Power Generation Design Basis

Revise the fourth bullet in DCD Subsection 11.5.1.2 as follows:

STD COL 11.5-2

- Data collection and data storage to support compliance reporting for the applicable NRC requirements and guidelines, such as General Design Criterion 64 and Regulatory Guide 1.21 and Regulatory Guide 4.15, Revision 1.

11.5.2.4 Inservice Inspection, Calibration, and Maintenance

Add the following information at the end of DCD Subsection 11.5.2.4:

STD COL 11.5-2

Daily checks of effluent monitoring system operability are made by observing channel behavior. Detector response is routinely observed with a remotely-positioned check source in accordance with plant procedures. Instrument background count rate is also observed to determine proper functioning of the monitors. Any detector whose response cannot be verified by observation during normal operation or by using the remotely-positioned check source can have its response checked with a portable check source. A record is maintained showing the background radiation level and the detector response.

Calibration of the continuous radiation monitors is done with commercial radionuclide standards that have been standardized using a measurement system traceable to the National Institute of Standards and Technology.

11.5.3 EFFLUENT MONITORING AND SAMPLING

Add the following information at the end of the DCD Subsection 11.5.3.

VEGP COL 11.5-2

SNC is extending the existing SNC program for quality assurance of radiological effluent and environmental monitoring that is based on Regulatory Guide 4.15, Revision 1, to apply to Vogtle Units 3 and 4. Regulatory Guide 4.15, Revision 1, is a proven methodology for quality assurance of radiological effluent and environmental monitoring programs that is acceptable to the NRC staff as a method for demonstrating compliance with applicable requirements of 10 CFR Parts 20, 50, 52, 61, and 72. Use of Revision 2 of Regulatory Guide 4.15 would

necessitate conducting two separate programs involving the use of common staff facilities and equipment, which will create an undue burden and may lead to an increased possibility for human error. Therefore, SNC commits to use Regulatory Guide 4.15, Revision 1, methodology for Vogtle Units 3 and 4 for optimal consistency, efficiency, and practicality.

11.5.4 PROCESS AND AIRBORNE MONITORING AND SAMPLING

STD COL 11.5-2 Add the following information at the end of the first paragraph in DCD Subsection 11.5.4.

The sampling program for liquid and gaseous effluents will conform to Regulatory Guide 4.15, Revision 1 (See Appendix 1AA).

Add the following information at the end of DCD Subsection 11.5.4.

11.5.4.1 Effluent Sampling

STD COL 11.5-2 Effluent sampling of potential radioactive liquid and gaseous effluent paths is conducted on a periodic basis to verify effluent processing meets the discharge limits to offsite areas. The effluent sampling program provides the information for the effluent measuring and reporting required by 10 CFR 50.36a and 10 CFR Part 20 and implemented through the Offsite Dose Calculation Manual (ODCM) and plant procedures. The frequency of the periodic sampling and analyses described herein are nominal and may be increased as permitted by procedure. Tables 11.5-201 and 11.5-202 summarize the sample and analysis schedules and sensitivities, respectively. The information contained in Tables 11.5-201 and 11.5-202 are derived from Regulatory Guide 1.21.

Laboratory isotopic analyses are performed on continuous and batch effluent releases in accordance with the ODCM. Results of these analyses are compiled and appropriate portions are utilized to produce the Radioactive Effluent Release Report.

11.5.4.2 Representative Sampling

The pressure head of the fluid, if available, is used for taking samples. If sufficient pressure head is not available to take samples, then sample pumps are used to draw the sample from the process fluid to the detector panels and back to the process.

For obtaining representative samples in unfiltered ducts, isokinetic probes are used as recommended by ANSI N13.1 (Reference 201).

Analytical Procedures

Typically, samples of process and effluent gases and liquids are analyzed in the station laboratory or by an outside laboratory via the following techniques:

- Gross alpha/beta counting
- Gamma spectrometry
- Liquid scintillation counting

"Available" instrumentation and counting techniques change as other instruments and techniques become available. For this reason, the frequency of sampling and the analysis of samples are generalized in this subsection.

Gross alpha/beta analysis may be performed directly on unprocessed samples (e.g., air filters) or on processed samples (e.g., evaporated liquid samples). Sample volume, counting geometry, and counting time are chosen to match measurement capability with sample activity. Correction factors for sample-detector geometry, self-absorption and counter resolving time are applied to provide the required accuracy.

Liquid effluent samples are prepared for alpha/beta counting by evaporation onto steel planchets. Gamma analysis may be done on any type of sample (gas, solid or liquid) in a gamma spectrometer.

Tritiated water vapor samples are collected by condensation or adsorption, and the resultant liquid is analyzed by liquid scintillation counting techniques.

Radiochemical separations are used for the routine analysis of Sr-89 and Sr-90.

Liquid samples are collected in polyethylene bottles to minimize absorption of nuclides onto container walls.

11.5.6.5 Quality Assurance

Add the following information at the end of DCD Subsection 11.5.6.5.

STD COL 11.5-2 The sampling program and the associated monitors conform to Regulatory Guide 4.15, Revision 1 (See Appendix 1AA).

11.5.7 COMBINED LICENSE INFORMATION

STD COL 11.5-1 This section adopts NEI 07-09 (Reference 202), which is currently under review by NRC staff. The ODCM program description contains the methodology and parameters used for calculating doses resulting from liquid and gaseous effluents. The ODCM program description addresses operational setpoints, including planned discharge rates, for radiation monitors and monitoring programs (process and effluent monitoring and environmental monitoring) for the control and assessment of the release of radioactive material to the environment. The ODCM program description provides the limitations on operation of the radwaste systems, including functional capability of monitoring instruments, concentrations of effluents, sampling, analysis, 10 CFR Part 50, Appendix I dose and dose commitments, and reporting. The ODCM program description will be finalized prior to fuel load with site-specific information.

Table 13.4-201 provides milestones for ODCM implementation.

STD COL 11.5-2 This COL Item is addressed in Subsections 11.5.1.2, 11.5.2.4, 11.5.4, 11.5.4.1, 11.5.4.2, and 11.5.6.5.

VEGP COL 11.5-2 This COL Item is addressed in Subsection 11.5.3.

STD COL 11.5-3 This COL Item is addressed in Subsection 11.2.3.5 and 11.3.3.4 for liquid and gaseous effluents, respectively.

Add the following subsection after DCD Subsection 11.5.7.

11.5.8 REFERENCES

201. ANSI N13.1-1999, “Sampling and Monitoring Releases of Airborne Radioactive Substances from the Stacks and Ducts of Nuclear Facilities.”

202. NEI 07-09, “Generic FSAR Template Guidance for Offsite Dose Calculation Manual (ODCM) Program Description,” Revision 0, September 2007.

STD COL 11.5-2

Table 11.5-201 (Sheet 1 of 2)
Minimum Sampling Frequency

Stream	Sampled Medium	Frequency
Gaseous	Continuous Release	A sample is taken within one month of initial criticality, and at least weekly thereafter to determine the identity and quantity for principal nuclides being released. A similar analysis of samples is performed following each refueling, process change, or other occurrence that could alter the mixture of radionuclides. When continuous monitoring shows an unexplained variance from an established norm. Monthly for tritium.
	Batch Release	Prior to release to determine the identity and quantity of the principal radionuclides (including tritium).
	Filters (particulates)	Weekly. Quarterly for Sr-89 and Sr-90. Monthly for gross alpha.

STD COL 11.5-2

Table 11.5-201 (Sheet 2 of 2)
Minimum Sampling Frequency

Stream	Sampled Medium	Frequency
Liquid	Continuous Releases	Weekly for principal gamma-emitting radionuclides.
		Monthly, a composite sample for tritium and gross alpha.
		Monthly, a representative sample for dissolved and entrained fission and activation gases.
		Quarterly, a composite sample for Sr-89, Sr-90, and Fe-55.
	Batch Releases	Prior to release for principal gamma-emitting radionuclides.
		Monthly, a composite sample for tritium and gross alpha.
		Monthly, a representative sample from at least one representative batch for dissolved and entrained fission and activation gases.
		Quarterly, a composite sample for Sr-89, Sr-90 and Fe-55.

STD COL 11.5-2

Table 11.5-202
Minimum Sensitivities

Stream	Nuclide	Sensitivity
Gaseous	Fission & Activation Gases	1.0E-04 μCi/cc
	Tritium	1.0E-06 μCi/cc
	Iodines & Particulates	Sufficient to permit measurement of a small fraction of the activity that would result in annual exposures of 15 mrem to thyroid for iodines, and 15 mrem to any organ for particulates, to an individual in an unrestricted area.
	Gross Radioactivity	Sufficient to permit measurement of a small fraction of the activity that would result in annual air dose of 1) 10 mrad due to gamma, and 2) 20 mrad of beta at any location near ground level at or beyond the site boundary.
Liquid	Gross Radioactivity	1.0E-07 μCi/ml
	Gamma-emitters	5.0E-07 μCi/ml
	Dissolved & Entrained Gases	1.0E-05 μCi/ml
	Gross Alpha	1.0E-07 μCi/ml
	Tritium	1.0E-05 μCi/ml
	Sr-89 & Sr-90	5.0E-08 μCi/ml
	Fe-55	1.0E-06 μCi/ml

CHAPTER 12

RADIATION PROTECTION

TABLE OF CONTENTS

Section	Title	Page
12.1	ASSURING THAT OCCUPATIONAL RADIATION EXPOSURES ARE AS-LOW-AS-REASONABLY ACHIEVABLE (ALARA)	12.1-1
12.1.2.4.3	Equipment Layout	12.1-1
12.1.3	COMBINED LICENSE INFORMATION	12.1-1
12.2	RADIATION SOURCES	12.2-1
12.2.1.1.10	Miscellaneous Sources	12.2-1
12.2.3	COMBINED LICENSE INFORMATION	12.2-2
12.3	RADIATION PROTECTION DESIGN FEATURES	12.3-1
12.3.1	FACILITY DESIGN FEATURES	12.3-1
12.3.1.2	Radiation Zoning and Access Control	12.3-1
12.3.4	AREA RADIATION AND AIRBORNE RADIOACTIVITY MONITORING INSTRUMENTATION	12.3-1
12.3.5.1	Administrative Controls for Radiological Protection	12.3-5
12.3.5.2	Criteria and Methods for Radiological Protection	12.3-5
12.3.5.3	Groundwater Monitoring Program	12.3-5
12.3.5.4	Record of Operational Events of Interest for Decommissioning	12.3-5
12.4	DOSE ASSESSMENT	12.4-1
12.4.1.9	Radiation Exposure to Construction Workers	12.4-1
12.4.1.9.1	Site Layout	12.4-1
12.4.1.9.2	Radiation Sources	12.4-1
12.4.1.9.2.1	Direct Radiation	12.4-1
12.4.1.9.2.2	Gaseous Effluents	12.4-1
12.4.1.9.2.3	Liquid Effluents	12.4-2
12.4.1.9.3	Measured and Calculated Dose Rates	12.4-2
12.4.1.9.3.1	Direct Radiation	12.4-2
12.4.1.9.3.2	Gaseous Effluents	12.4-3
12.4.1.9.3.3	Liquid Effluents	12.4-3
12.4.1.9.4	Construction Worker Doses	12.4-4
12.4.1.9.4.1	Direct Radiation	12.4-4
12.4.1.9.4.2	Gaseous Effluents	12.4-4
12.4.1.9.4.3	Liquid Effluents	12.4-4
12.4.1.9.4.4	Total Doses	12.4-5

TABLE OF CONTENTS (Continued)

Section	Title	Page
12.4.4	REFERENCES	12.4-5
12.5	HEALTH PHYSICS FACILITIES DESIGN	12.5-1
12.5.2.2	Facilities	12.5-1
12.5.5	COMBINED LICENSE INFORMATION	12.5-1
12AA	RADIATION PROTECTION PROGRAM DESCRIPTION	12AA-1
12AA.5.4.13	Groundwater Monitoring Program	12AA-3
12AA.5.4.14	Record of Operational Events of Interest for Decommissioning	12AA-3

LIST OF TABLES

Number	Title
12.4-201	Annual Construction Worker Doses
12.4-202	Comparison with 10 CFR 20.1301 Criteria for Doses to Members of the Public
12.4-203	Comparison with 40 CFR 190 Criteria for Doses to Members of the Public
12.4-204	Comparison with 10 CFR 50, Appendix I Criteria for Effluent Doses

LIST OF FIGURES

Number	Title
12.3-201	Radiation Zones, Normal Operations/Shutdown Annex Building, Elevation 100'-0" & 107'-2"
12.3-202	Radiation Zones, Post-Accident Annex Building, Elevation 100'-0" & 107'-2"
12.3-203	Radiological Access Controls, Normal Operations/ Shutdown Annex Building, Elevation 100'-0" & 107'-2"

CHAPTER 12

RADIATION PROTECTION

12.1 ASSURING THAT OCCUPATIONAL RADIATION EXPOSURES ARE AS-LOW-AS-REASONABLY ACHIEVABLE (ALARA)

This section of the referenced DCD is incorporated by reference with the following departures and/or supplements.

STD COL 12.1-1 This section incorporates by reference NEI 07-08, Generic FSAR Template Guidance for Ensuring That Occupational Radiation Exposures Are As Low As Is Reasonably Achievable (ALARA), Revision 0, which is currently under review by the NRC staff. See Table 1.6-201.

Add the following information at the end of DCD Subsection 12.1.2.4:

12.1.2.4.3 Equipment Layout

STD SUP 12.1-1 A video record of the equipment layout in areas where radiation fields are expected to be high following operations may be used to assist in ALARA planning and to facilitate decommissioning.

12.1.3 COMBINED LICENSE INFORMATION

STD COL 12.1-1 This COL item is addressed in NEI 07-08 and Appendix 12AA.

VEGP COL 12.1-1

12.2 RADIATION SOURCES

This section of the referenced DCD is incorporated by reference with the following departures and/or supplements.

12.2.1.1.10 Miscellaneous Sources

Add the following information at the end of DCD Subsection 12.2.1.1.10:

STD COL 12.2-1 Licensed sources containing byproduct, source, and special nuclear material that warrant shielding design consideration meet the applicable requirements of 10 CFR Parts 20, 30, 31, 32, 33, 34, 40, 50, and 70.

There are byproduct and source materials with known isotopes and activity manufactured for the purpose of measuring, checking, calibrating, or controlling processes quantitatively or qualitatively.

These sources include but are not limited to:

- Sources in field monitoring equipment.
- Sources in radiation monitors to maintain a threshold sensitivity.
- Sources used for radiographic operations.
- Depleted uranium slabs used to determine beta response and correction factors for portable monitoring instrumentation.
- Sources used to calibrate and response check field monitoring equipment (portable and fixed).
- Liquid standards and liquids or gases used to calibrate and verify calibration of laboratory counting and analyzing equipment.
- Radioactive waste generated by the use of radioactive sources.

Specific details of these sources are maintained in a database on-site following procurement. This database, at a minimum, contains the following information:

- Isotopic composition
- Location in the plant
- Source strength

- Source geometry

Written procedures are established and implemented that address procurement, receipt, inventory, labeling, leak testing, surveillance, control, transfer, disposal, storage, issuance and use of these radioactive sources. These procedures are developed in accordance with the radiation protection program to comply with 10 CFR Parts 19 and 20. A supplementary warning symbol is used in the presence of large sources of ionizing radiation consistent with the guidance in Regulatory Issue Summary (RIS) 2007-03.

Sources maintained on-site for instrument calibration purposes are shielded while in storage to keep personnel exposure ALARA. Sources used to service or calibrate plant instrumentation are also routinely brought on-site by contractors. Radiography is performed by the licensed utility group or licensed contractors. These sources are maintained and used in accordance with the provisions of the utility group's or contractor's license. Additional requirements and restrictions may apply depending on the type of source, use, and intended location of use. If the utility group or contractor source must be stored on-site, designated plant personnel must approve the storage location, and identify appropriate measures for maintaining security and personnel protection.

12.2.3 COMBINED LICENSE INFORMATION

STD COL 12.2-1 This COL item is addressed in Subsection 12.2.1.1.10.

12.3 RADIATION PROTECTION DESIGN FEATURES

This section of the referenced DCD is incorporated by reference with the following departures and/or supplements.

12.3.1 FACILITY DESIGN FEATURES

12.3.1.2 Radiation Zoning and Access Control

VEGP DEP 18.8-1 Add the following information at the end of the second paragraph in DCD Subsection 12.3.1.2.

Figure 12.3-201, Figure 12.3-202, and Figure 12.3-203 replace DCD Figure 12.3-1 (sheet 11), DCD Figure 12.3-2 (sheet 11), and DCD Figure 12.3-3 (sheet 11), respectively, to reflect the relocation of the Operations Support Center.

12.3.4 AREA RADIATION AND AIRBORNE RADIOACTIVITY MONITORING INSTRUMENTATION

Add the following text to the end of DCD Subsection 12.3.4.

STD COL 12.3-2 Procedures detail the criteria and methods for obtaining representative measurement of radiological conditions, including in-plant airborne radioactivity concentrations in accordance with applicable portions of 10 CFR Part 20 and consistent with the guidance in Regulatory Guides 1.21-Appendix A, 8.2, 8.8, and 8.10. Additional discussion of radiological surveillance practices is included in the radiation protection program description provided in Appendix 12AA.

Surveillance requirements are determined by the functional manager in charge of radiation protection based on actual or potential radiological conditions encountered by personnel and the need to identify and control radiation, contamination, and airborne radioactivity. These requirements are consistent with the operational philosophy in Regulatory Guide 8.10. Frequency of scheduled surveillance may be altered by permission of the functional manager in charge of radiation protection or their designee. Radiation Protection periodically provides cognizant personnel with survey data that identifies radiation exposure gradients in area resulting from identified components. This data includes recent reports, with survey data, location and component information.

The following are typical criteria for frequencies and types of surveys:

Job Coverage Surveys

- Radiation, contamination, and/or airborne surveys are performed and documented to support job coverage.
- Radiation surveys are sufficient in detail for Radiation Protection to assess the radiological hazards associated with the work area and the intended/ specified work scope.
- Surveys are performed commensurate with radiological hazard, nature and location of work being conducted.
- Job coverage activities may require surveys to be conducted on a daily basis where conditions are likely to change.

Radiation Surveys

- Radiation surveys are performed at least monthly in any radiological controlled area (RCA) where personnel may frequently work or enter. Survey frequencies may be modified by the functional manager in charge of radiation protection as previously noted.
- Radiation surveys are performed prior to or during entry into known or suspected high radiation areas for which up to date survey data does not exist.
- Radiation surveys are performed prior to work involving highly contaminated or activated materials or equipment.
- Radiation surveys are performed at least semiannually in areas outside the RCA. Areas to be considered include shops, offices, and storage areas.
- Radiation surveys are performed to support movement of highly radioactive material.
- Neutron radiation surveys are performed when personnel may be exposed to neutron emitting sources.

Contamination Surveys

- Contamination surveys are performed at least monthly in any RCA where personnel may frequently work or enter. Survey frequencies may be modified by the functional manager in charge of radiation protection as previously noted.

- Contamination surveys are performed during initial entry into known or suspected contamination area(s) for which up to date survey data does not exist.

- Contamination surveys are performed at least daily at access points, change areas, and high traffic walkways in RCAs that contain contaminated areas. Area access points to a High Radiation Area or Very High Radiation Area are surveyed prior to or upon access by plant personnel or if access has occurred.

- Contamination surveys are performed at least semiannually in areas outside the RCA. Areas to be considered include shops, offices, and storage areas.

- A routine surveillance is conducted in areas designated by the functional manager in charge of radiation protection or their designee likely to indicate alpha radioactivity. If alpha contamination is identified, frequency and scope of the routine surveillance is increased.

Airborne Radioactivity Surveys

- Airborne radioactivity surveys are performed during any work or operation in the RCA known or suspected to cause airborne radioactivity (e.g., grinding, welding, burning, cutting, hydrolazing, vacuuming, sweeping, use of compressed air, using volatiles on contaminated material, waste processing, or insulation).

- Airborne radioactivity surveys are performed during a breach of a radioactive system, which contains or is suspected of containing significant levels of contamination.

- Airborne radioactivity surveys are performed during initial entry (and periodically thereafter) into any known or suspected airborne radioactivity area.

- Airborne radioactivity surveys are performed immediately following the discovery of a significant radioactive spill or spread of radioactive contamination, as determined by the functional manager in charge of radiation protection.

- Airborne radioactivity surveys are performed daily in occupied radiological controlled areas where the potential for airborne radioactivity exists, including containment.

- Airborne radioactivity surveys are performed any time respiratory protection devices, alternative tracking methods such as derived air concentration-hour (DAC-hr), and/or engineering controls are used to control internal exposure.

- Airborne radioactivity surveys are performed using continuous air monitors (CAMs) for situations in which airborne radioactivity levels can fluctuate and early detection of airborne radioactivity could prevent or minimize inhalations of radioactivity by workers. Determination of air flow patterns are considered for locating air samplers.

- Airborne radioactivity surveys are performed prior to use and monthly during use on plant service air systems used to supply air for respiratory protection to verify the air is free of radioactivity.

- Tritium sampling is performed near the spent fuel pit when irradiated fuel is in the pit and other areas of the plant where primary system leaks occur and tritium is suspected.

Appropriate counting equipment is used based on the sample type and the suspected identity of the radionuclides for which the sample is being done. Survey results are documented, retrievable, and processed per site document control and records requirements consistent with Regulatory Guide 8.2. Completion of survey documentation includes the update of room/area posting maps and revising area or room postings and barricades as needed.

Air samples indicating activity levels greater than a procedure specified percentage of DAC are forwarded to the radiochemistry laboratory for isotopic analysis. Samples which cannot be analyzed on-site are forwarded to a contractor for analysis; or, the DAC percentage may be hand calculated using appropriate values from 10 CFR Part 20, Appendix B.

The responsible radiation protection personnel review survey documentation to evaluate if surveys are appropriate and obtained when required, records are complete and accurate, and adverse trends are identified and addressed.

An in-plant radiation monitoring program maintains the capability to accurately determine the airborne iodine concentration in areas within the facility where personnel may be present under accident conditions. This program includes the training of personnel, procedures for monitoring, and provisions for maintenance of sampling and analysis equipment consistent with Regulatory Guides 1.21 (Appendix A) and 8.8. Training and personnel qualifications are discussed in Appendix 12AA.

A portable monitor system meeting the requirements of NUREG-0737, Item III.D.3.3, is available. The system uses a silver zeolite or charcoal iodine sample cartridge and a single-channel analyzer. The use of this portable monitor is incorporated in the emergency plan implementing procedures. The portable monitor is part of the in-plant radiation monitoring program. It is used to determine the airborne iodine concentration in areas where plant personnel may be present during an accident. Accident monitoring instrumentation complies with applicable parts of 10 CFR Part 50, Appendix A.

Sampling cartridges can be removed to a low background area for further analysis. These cartridge samples can be purged of any entrapped noble gases, when necessary, prior to being analyzed.

12.3.5.1 Administrative Controls for Radiological Protection

STD COL 12.3-1
VEGP COL 12.3-1

This COL Item is addressed in Appendix 12AA.

12.3.5.2 Criteria and Methods for Radiological Protection

STD COL 12.3-2

This COL Item is addressed in Subsection 12.3.4.

12.3.5.3 Groundwater Monitoring Program

STD COL 12.3-3

This COL Item is addressed in Appendix 12AA.

12.3.5.4 Record of Operational Events of Interest for Decommissioning

STD COL 12.3-4

This COL Item is addressed in Appendix 12AA.

Security-Related Information — Withhold Under 10 CFR 2.390(d)
(See Part 9 of this COL Application)

(Note: This figure replaces DCD Figure 12.3-1 Sheet 11 of 16.)

VEGP DEP 18.8-1

Figure 12.3-201
Radiation Zones, Normal Operations /Shutdown Annex Building Elevation 100'-00" & 107'-2"

Security-Related Information — Withhold Under 10 CFR 2.390(d)
(See Part 9 of this COL Application)

(Note: This figure replaces DCD Figure 12.3-2 Sheet 11 of 15.)

VEGP DEP 18.8-1

Figure 12.3-202
Radiation Zones, Post-Accident Annex Building,
Elevation 100'-0" & 107'-2"

Security-Related Information — Withhold Under 10 CFR 2.390(d)
(See Part 9 of this COL Application)

(Note: This figure replaces DCD Figure 12.3-3 Sheet 11 of 16.)

VEGP DEP 18.8-1

Figure 12.3-203
Radiological Access Controls, Normal Operations/Shutdown
Annex Building Elevation 100'-0" & 107'-2"

12.4 DOSE ASSESSMENT

This section of the referenced DCD is incorporated by reference with the following departures and/or supplements.

VEGP SUP 12.4-1 Add the following new subsections after DCD Subsection 12.4.1.8:

12.4.1.9 Radiation Exposure to Construction Workers

12.4.1.9.1 Site Layout

The physical location of VEGP Units 3 and 4 relative to Units 1 and 2 is depicted on Figure 1.1-202. As shown, Units 3 and 4 will be immediately west of Units 1 and 2. Construction activity will take place outside the Units 1 and 2 protected area, but inside the restricted area boundary.

12.4.1.9.2 Radiation Sources

During the construction of Units 3 and 4, the construction workers could be exposed to radiation sources from the routine operation of Units 1 and 2. Furthermore, Unit 4 construction workers could be exposed to radiation from Unit 3 operation.

12.4.1.9.2.1 Direct Radiation

The principal sources from Units 1 and 2 that contribute to direct radiation exposure at the construction site include the reactor buildings and the planned Independent Spent Fuel Storage Installation (ISFSI), which will be located west of Unit 2 (See Figure 1.1-202). In addition, workers constructing Unit 4 could be exposed to direct radiation from the Unit 3 reactor building.

12.4.1.9.2.2 Gaseous Effluents

Sources of gaseous releases for Units 1 and 2 are currently confined to the following paths: plant vents (Unit 1 and Unit 2), the condenser air ejector, the steam packing exhauster systems (Unit 1 and Unit 2), Radwaste Processing Facility and the DAW (Dry Active Waste Building). Waste gas decay tanks are batch released through the Unit 1 plant vent. The containment purges are released through their respective plant vents. (Reference 203)

The annual releases for the 2002 were reported as 26.3 Ci of fission and activation products, 0.0207 Ci of I-131, 1.67×10^{-5} Ci of particulates with half-lives greater than eight days, and 105 Ci of tritium (Reference 202). The annual releases for 2002 were selected because they resulted in the maximum exposure to the public among the years 2001-2004.

Unit 4 construction workers could also be exposed to radioactivity in gaseous effluents from Unit 3. DCD Table 11.3-3 presents the projected gaseous effluent releases for Unit 3.

12.4.1.9.2.3 Liquid Effluents

Effluents from the liquid waste disposal system result in small amounts of radioactivity in the Savannah River. The annual liquid radioactivity releases for 2001 were reported as 0.220 Ci of fission and activation products, 1,490 Ci tritium, and 0.000423 Ci of dissolved and entrained gases (Reference 201). The annual releases for 2001 were selected because they were reported as the maximum exposure to the public among the years 2001-2004.

Unit 4 construction workers could be exposed to radioactivity in liquid effluents from Unit 3, but that is unlikely given that drinking water is derived from sources other than the Savannah River. DCD Table 11.2-7 presents the projected liquid effluent releases for Unit 3. Applying the Units 1, 2, and 3 liquid effluent doses to Unit 4 construction workers is conservative in that it assumes these construction workers engage in the same activities that lead to the calculated liquid effluent doses (i.e., consuming fish and drinking surface water).

12.4.1.9.3 Measured and Calculated Dose Rates

The measured or calculated dose rates used to estimate worker doses are presented below.

12.4.1.9.3.1 Direct Radiation

<u>Units 1 and 2 External Radiation Exposure</u>

The average accumulated exposure from the six thermoluminescent dosimeters (TLDs) along the Units 1 and 2 Protected Area Fence closest to the construction site over a 365 day period is 115.9 mrem. The average TLD exposure from sixteen environmental locations surrounding the site over a 365 day period is 49.0 mrem. The measured radiation dose from the Protected Area Fence TLDs minus the Surrounding Environmental Site TLD's, is:

115.9 mrem per year - 49.0 mrem per year = 66.9 mrem per year

<u>Independent Spent Fuel Storage Installation (ISFSI)</u>

The estimated dose to construction workers from the planned ISFSI is estimated to be 15 mrem per year for the Unit 3 construction workforce and negligible for the Unit 4 construction workforce. It is conservatively assumed that SNC will put the ISFSI in service during Unit 3 construction and that the Unit 3 construction workers would be exposed for an entire year.

Unit 3 Direct Radiation Exposure to Unit 4 Construction Workers

Conservatively assuming that the 66.9 mrem per year value presented above for Units 1 and 2 is attributable only to direct radiation from these units, and assuming this would be representative of the direct radiation dose from Unit 3 to Unit 4 construction workers gives a direct radiation dose to Unit 4 construction workers from Unit 3 operations of:

66.9 mrem per year / 2 units = 33.5 mrem per year (for one unit)

Summary of External Radiation

From all of the above sources discussed above, the highest direct radiation dose to construction workers will be during Unit 4 construction and is estimated to be 100.4 mrem per year (66.9 mrem from Units 1 and 2 + 33.5 mrem from Unit 3). The highest direct radiation exposure during Unit 3 construction would be 81.9 mrem per year (66.9 mrem from Units 1 and 2 + 15 mrem from the ISFSI). Therefore the Unit 4 construction workers doses would be bounding and are discussed in the remainder of this section.

12.4.1.9.3.2 Gaseous Effluents

Units 1 and 2

The XOQDOQ and GASPAR II codes were used to calculate the dose to Unit 4 workers from Units 1 and 2 gaseous effluents. The calculation is analogous to that for Units 3 and 4 as described in Subsection 11.3.3.4. Unit 4 construction workers would receive a total body radiation dose of 0.077 mrem per year and a maximum organ (lung) dose of 0.16 mrem per year from Units 1 and 2 normal radiological releases.

Unit 3 Gaseous Effluent Exposure to Unit 4 Construction Workers

Using the XOQDOQ and GASPAR II codes, as described in Subsection 11.3.3.4, Unit 4 construction workers would receive a total body radiation dose of 0.74 mrem per year and a maximum organ (skin) dose of 2.51 mrem per year from Unit 3 normal radiological releases.

12.4.1.9.3.3 Liquid Effluents

Units 1 and 2

The Annual Radioactive Effluent Release Report for 2001 (Reference 201) reports a total body dose of 0.0907 mrem and a critical organ dose (GI-LLI) of 0.153 mrem to the maximally exposed member of the public due to the release of liquid effluents from Units 1 and 2, calculated in accordance with Units 1 and 2 Offsite Dose Calculation Manual (Reference 204). SNC assumes this dose rate represents the rate for construction workers from Units 1 and 2 releases.

Unit 3 Liquid Effluent Exposure to Unit 4 Construction Workers

Using the LADTAP II code, as described in Subsection 11.2.3.5, the maximally exposed member of the public would receive a total body radiation dose of 0.017 mrem per year and a maximum organ (liver) dose of 0.021 mrem per year from normal Unit 3 liquid radiological releases.

12.4.1.9.4 Construction Worker Doses

Construction worker doses were conservatively estimated using the following information:

- The estimated maximum dose rate for each pathway
- An exposure time of 2000 hours per year
- All gaseous releases assumed at ground level
- A peak loading of 4,400 construction workers per year total for two AP1000 units

The estimated maximum annual dose for each pathway as well as the total dose is shown in Table 12.4-201.

12.4.1.9.4.1 Direct Radiation

Subsection 12.4.1.9.3.1 indicates an average annual direct radiation dose of 100.4 mrem based on TLD measurements. These TLD measurements and calculated doses reflect continuous exposures for long periods of time. The average measured dose rate of 100.4 mrem/yr is based on continuous exposure.

Adjusting for an exposure time of 2000 hours/year yields an annual worker whole body dose or total effective dose equivalent (TEDE) of 22.9 mrem.

12.4.1.9.4.2 Gaseous Effluents

The annual gaseous effluent doses to a Unit 4 construction worker after Unit 3 is operating (Subsection 12.4.1.9.3.2), which accounts for an exposure time of 2,000 hours per year, are 0.077 mrem for the total body, and 0.16 mrem for the critical organ (lung) from Units 1 and 2 gaseous effluent releases and 0.74 mrem for the total body, and 2.51 mrem (skin) for the critical organ from Unit 3 gaseous effluent releases. The total dose is 0.81 mrem total body and 2.60 mrem to the critical organ (skin).

12.4.1.9.4.3 Liquid Effluents

As the annual liquid effluent doses to the maximally exposed member of the public in Subsection 12.4.1.9.3 are based on continuous occupancy, they were adjusted

for an exposure time of 2000 hr/yr. Although it is unlikely that the construction workers will be exposed to liquid effluent pathways, it is assumed that the liquid effluent dose rates to which the workers will be exposed are the same as those for the maximally exposed member of the public.

The resulting doses are 0.021 mrem for the total body and 0.035 mrem for the critical organ (GL-LLI) from Units 1 and 2 liquid effluent releases and 0.0038 mrem for the total body, and 0.0047 mrem for the critical organ (liver) from Unit 3 liquid effluent releases. The total annual dose is 0.025 mrem total body and 0.037 mrem to the critical organ (GI-LLI).

12.4.1.9.4.4 Total Doses

The annual doses from all three pathways are summarized in Table 12.4-201 and compared to the public dose criteria in the 10 CFR 20.1301 and 40 CFR 190 in Table 12.4-202 and Table 12.4-203, respectively. The unrestricted area dose rate in Table 12.4-202 was estimated from the annual TLD doses. Since the calculated doses (24.1 mrem per year and 0.012 mrem per hour) meet the public dose criteria of the 10 CFR 20.1301 and 40 CFR 190, the workers will not need to be classified as radiation workers. Table 12.4-204 provides documentation confirming that the doses also meet the design objectives of 10 CFR 50, Appendix I, for gaseous and liquid effluents.

The maximum annual collective dose to the AP1000 construction work force (4,400 workers) is estimated to be 106 person-rem. The calculated doses are based on available dose rate measurements and calculations. It is possible that these dose rates will increase in the future as site conditions change. However, the VEGP site will be continually monitored during the construction period and appropriate actions will be taken as necessary to ensure that the construction workers are protected from radiation.

Add the following new subsection after DCD Subsection 12.4.3

12.4.4 REFERENCES

201. Southern Nuclear Company, Vogtle Electric Generating Plant - Units 1 and 2, NRC Docket Nos. 50-424 and 50-425, Facility Operating License Nos. NPF-68 and NPF-81, Annual Radioactive Effluent Release Report for January 1, 2001 to December 31, 2001.

202. Southern Nuclear Company, Vogtle Electric Generating Plant - Units 1 and 2, NRC Docket Nos. 50-424 and 50-425, Facility Operating License Nos. NPF-68 and NPF-81, Annual Radioactive Effluent Release Report for January 1, 2002 to December 31, 2002.

203. Southern Nuclear Company, Vogtle Electric Generating Plant - Units 1 and 2, NRC Docket Nos. 50-424 and 50-425, Facility Operating License Nos. NPF-68 and NPF-81, Annual Radioactive Effluent Release Report for January 1, 2003 to December 31, 2003.

204. Southern Nuclear Company, Offsite Dose Calculation Manual for Southern Nuclear Operating Company Vogtle Electric Generating Plant, Version 22, June 25, 2004.

VEGP SUP 12.4-1

Table 12.4-201
Annual Construction Worker Doses

	Annual Dose (mrem)		
	Total Body	Critical Organ	Total Effective Dose Equivalent (TEDE)
Direct radiation	22.9	NA	22.9
Gaseous effluents	0.81	2.6 (skin)	1.16
Liquid effluents	0.025	0.037 (GI-LLI)	0.034
Total	23.8	2.6 (skin)	24.1

VEGP SUP 12.4-1

Table 12.4-202
Comparison with 10 CFR 20.1301 Criteria for Doses to Members of the Public

Criterion	Dose Limit	Estimated Dose (TEDE)
Annual dose (mrem)	100	24.1
Unrestricted area dose rate (mrem/hour)	2	0.012

Table 12.4-203
Comparison with 40 CFR 190 Criteria for Doses to Members of the Public

	Annual Dose (mrem)	
Organ	Limit	Estimated
Total body	25	23.8
Thyroid	75	1.4
Other organ	25	2.6 (skin)

Table 12.4-204
Comparison with 10 CFR 50,
Appendix I Criteria for Effluent Doses

	Annual Dose (mrem)	
	Limit	Estimated
Total body dose from liquid effluents	3	0.025
Organ dose from liquid effluents	10	0.037 (GI-LLI)
Total body dose from gaseous effluents	5	0.81
Organ dose from radioactive iodine and radioactive particulates in gaseous effluents	15	0.81 (thyroid)

12.5 HEALTH PHYSICS FACILITIES DESIGN

This section of the referenced DCD is incorporated by reference with the following departures and/or supplements.

12.5.2.2 Facilities

Revise the first sentence of DCD Subsection 12.5.2.2 to read:

VEGP DEP 18.8-1 The ALARA briefing room is located off the main corridor immediately beyond the main entry to the annex building.

12.5.5 COMBINED LICENSE INFORMATION

VEGP COL 12.5-1 This COL Item is addressed in Appendix 12AA.

Add the following Appendix after Section 12.5 of the DCD.

12AA RADIATION PROTECTION PROGRAM DESCRIPTION

VEGP COL 12.1-1
VEGP COL 12.3-1
VEGP COL 12.5-1

This appendix incorporates by reference NEI 07-03, Generic FSAR Template Guidance for Radiation Protection Program Description, Revision 4, which is currently under review by the NRC staff. See Table 1.6-201. The numbering of NEI 07-03 is revised from 12.5# to 12AA.5# through the document, with the following revisions and additions as indicated by strikethroughs and underlines. Table 13.4-201 provides milestones for radiation protection program implementation.

Revise the first paragraph of NEI 07-03 Subsection 12.5.2 as follows:

Qualification and training criteria for site personnel are consistent with the guidance in Regulatory Guide 1.8 and are described in Chapter 13. Specific radiation protection responsibilities for key positions within the plant organization are described in Section 13.1 ~~below~~.

Subsections 12.5.2.1 through 12.5.2.5 of NEI 07-03 are not incorporated into Appendix 12AA.

Subsections 12.5.3, 12.5.3.1 and 12.5.3.2 of NEI 07-03 are not incorporated into Appendix 12AA. Facilities, instrumentation and equipment are described in DCD Subsection 12.5.2.

Add the following text after the first paragraph of NEI 07-03 Subsection 12.5.3.3.

If circumstances arise in which NIOSH tested and certified respiratory equipment is not used, compliance with 10 CFR 20.1703(b) and 20.1705 is maintained.

The following headings and associated material are described in DCD Subsection 12.5.3, and are therefore not incorporated into Appendix 12AA:

- Radwaste Handling
- Spent Fuel Handling
- Normal Operation
- Sampling

Add the following text to the end of the discussion on normal operation in NEI 07-03 Subsection 12.5.4.2.

STD COL 12.3-1 A closed circuit television system may be installed in high radiation areas to allow remote monitoring of individuals entering high radiation areas by personnel qualified in radiation protection procedures.

Add the following text after the second paragraph of NEI 07-03 Subsection 12.5.4.4.

STD COL 12.3-1 In addition to the access control requirements for high radiation areas, the following control measures are implemented to control access to very high radiation areas in which radiation levels could be encountered at 500 rads or more in one hour at one meter from a radiation source or any surface through which the radiation penetrates:

- Sign(s) conspicuously posted stating GRAVE DANGER, VERY HIGH RADIATION AREA.
- Area is locked. Each lock shall have a unique core. The keys shall be administratively controlled by the functional manager in charge of radiation protection as described in Section 13.1.
- Plant Manager's (or designee) approval required for entry.
- Radiation Protection personnel shall accompany person(s) making the entry. Radiation Protection personnel shall assess the radiation exposure conditions at the time of the entry.

The locations and radiological controls of the radiation zones on plant diagrams are located in DCD Section 12.3.

Revise the third paragraph of NEI 07-03 Subsection 12.5.4.7 as follows.

VEGP COL 12.1-1
VEGP COL 12.3-1
VEGP COL 12.5-1

As described in Sections 12.1, ~~12.5.1~~Appendix 12AA and ~~12.5.2~~ 13.1, management policy is established, and organizational responsibilities and authorities are assigned to implement an effective program for maintaining occupational radiation exposures ALARA. Procedures are established and implemented that are in accordance with 10 CFR 20.1101 and consistent with the guidance in Regulatory Guides 8.8 and 8.10. Examples of such procedures include the following:

Revise the second bullet of NEI 07-03 Subsection 12.5.4.7 as follows.

II. Radiation Protection will assure that procedures and methods for operation, maintenance, repair, surveillance, refueling, and other activities that may involve significant exposures are reviewed prior

to initial use and periodically thereafter to assure measures are considered to minimize occupational and public radiation exposures. Significant exposures are defined by the functional manager in charge of radiation protection in procedures.

Add the following Subsection to the information incorporated from NEI 07-03.

STD COL 12.3-3 12AA.5.4.13 Groundwater Monitoring Program

A groundwater monitoring program beyond the normal radioactive effluent monitoring program is developed. If necessary to support this groundwater monitoring program, design features will be installed during the plant construction process. Areas of the site to be specifically considered in this groundwater monitoring program are:

- West of the auxiliary building in the area of the fuel transfer canal.
- West and south of the radwaste building.
- East of the auxiliary building rail bay and the radwaste building truck doors

---

STD SUP 12.5-1 Groundwater monitoring program implementation considerations include:

- Impacts on the foundation support if ground water or leaked liquids are extracted,
- Re-evaluation of the location and sampling frequency if contaminant is detected,
- Site specific models of contaminant migration, if contaminants are detected,
- Methods to isolate and collect liquid radioactive contaminants escaping to the subsurface to prevent abnormal release to ground water.

Add the following Subsection to the information incorporated from NEI 07-03.

STD COL 12.3-4 12AA.5.4.14 Record of Operational Events of Interest for Decommissioning

Procedures are established to document the operational events that are deemed of interest for decommissioning, beyond that required by 10 CFR 50.75. These documented operational events assist in developing a historical assessment of

the nuclear facilities, thereby reducing time, effort, and hazards to personnel during decommissioning planning. This documentation will include identification of the remediation of any leaks, which have the potential to contaminate groundwater.

CHAPTER 13

CONDUCT OF OPERATIONS

TABLE OF CONTENTS

Section	Title	Page
13.1	ORGANIZATIONAL STRUCTURE OF APPLICANT	13.1-1
13.1.1	MANAGEMENT AND TECHNICAL SUPPORT ORGANIZATION	13.1-1
13.1.1.1	Design, Construction, and Operating Responsibilities	13.1-1
13.1.1.2	Provisions for Technical Support Functions	13.1-2
13.1.1.2.1	Engineering	13.1-3
13.1.1.2.2	Safety Review	13.1-4
13.1.1.2.3	Quality Assurance	13.1-4
13.1.1.2.4	Chemistry	13.1-5
13.1.1.2.5	Radiation Protection	13.1-5
13.1.1.2.6	Fueling and Refueling Support	13.1-6
13.1.1.2.7	Training and Development	13.1-6
13.1.1.2.8	Maintenance Support	13.1-6
13.1.1.2.9	Operations Support	13.1-7
13.1.1.2.10	Fire Protection	13.1-7
13.1.1.2.11	Emergency Organization	13.1-7
13.1.1.2.12	Outside Contractual Assistance	13.1-8
13.1.1.3	Organizational Arrangement	13.1-8
13.1.1.3.1	Executive Management Organization	13.1-8
13.1.1.3.1.1	President and CEO	13.1-9
13.1.1.3.1.2	Senior Vice President — Nuclear Development	13.1-9
13.1.1.3.1.3	Executive Vice President/Chief Nuclear Officer	13.1-9
13.1.1.3.1.3.1	Site Vice President	13.1-9
13.1.1.3.1.3.2	Vice President-Fleet Operations Support	13.1-10
13.1.1.3.1.3.2.1	Manager of Fleet Security and Emergency Planning	13.1-10
13.1.1.3.1.3.2.2	Manager of Fleet Training and Performance Improvement	13.1-10
13.1.1.3.1.3.3	Fleet Oversight Manager (Quality Assurance)	13.1-10
13.1.1.3.1.4	Vice President-Engineering	13.1-11
13.1.1.3.1.5	Design Support Manager	13.1-11
13.1.1.3.1.5.1	Nuclear Licensing Manager	13.1-11
13.1.1.3.1.5.2	Nuclear Fuels Manager	13.1-11
13.1.1.3.1.6	Vice President and General Counsel	13.1-11
13.1.1.3.1.7	Chief Financial Officer and Vice President-Corporate Services	13.1-11
13.1.1.3.1.7.1	Supply Chain Manager	13.1-12
13.1.1.3.2	Site Support Organization	13.1-12
13.1.1.3.2.1	Site Support Manager	13.1-12

TABLE OF CONTENTS (Continued)

Section	Title	Page
13.1.1.3.2.2	Site Engineering Manager	13.1-12
13.1.1.4	Qualifications of Technical Support Personnel	13.1-12
13.1.2	OPERATING ORGANIZATION	13.1-13
13.1.2.1	Plant Organization	13.1-13
13.1.2.1.1	Plant Manager	13.1-14
13.1.2.1.2	Operations Department	13.1-15
13.1.2.1.2.1	Operations Manager	13.1-16
13.1.2.1.3	Conduct of Operations	13.1-17
13.1.2.1.4	Operating Shift Crews	13.1-17
13.1.2.1.5	Fire Brigade	13.1-18
13.1.3	QUALIFICATIONS OF NUCLEAR PLANT PERSONNEL	13.1-18
13.1.3.1	Qualification Requirements	13.1-18
13.1.3.2	Qualifications of Plant Personnel	13.1-18
13.1.4	COMBINED LICENSE INFORMATION ITEM	13.1-18
13.1.5	REFERENCES	13.1-19
13.2	TRAINING	13.2-1
13.2.1	COMBINED LICENSE INFORMATION ITEM	13.2-1
13.2.2	REFERENCES	13.2-1
13.3	EMERGENCY PLANNING	13.3-1
13.3.6	COMBINED LICENSE INFORMATION ITEM	13.3-1
13.3.7	NEW OR ADDITIONAL INFORMATION	13.3-2
13.3.8	ESP COL ACTION ITEMS	13.3-2
13.4	OPERATIONAL PROGRAMS	13.4-1
13.4.1	COMBINED LICENSE INFORMATION ITEM	13.4-1
13.4.2	REFERENCES	13.4-1
13.5	PLANT PROCEDURES	13.5-1
13.5.1	ADMINISTRATIVE PROCEDURES	13.5-1
13.5.2	OPERATING AND MAINTENANCE PROCEDURES	13.5-3
13.5.2.1	Operating and Emergency Operating Procedures	13.5-3
13.5.2.2	Maintenance and Other Operating Procedures	13.5-3
13.5.2.2.1	Plant Radiation Protection Procedures	13.5-3
13.5.2.2.2	Emergency Preparedness Procedures	13.5-4
13.5.2.2.3	Instrument Calibration and Test Procedures	13.5-4
13.5.2.2.4	Chemistry Procedures	13.5-4
13.5.2.2.5	Radioactive Waste Management Procedures	13.5-4

TABLE OF CONTENTS (Continued)

Section	Title	Page
13.5.2.2.6	Maintenance, Inspection, Surveillance, and Modification Procedures	13.5-4
13.5.2.2.6.1	Maintenance Procedures	13.5-4
13.5.2.2.6.2	Inspection Procedures	13.5-5
13.5.2.2.6.3	Modification Procedures	13.5-5
13.5.2.2.7	Material Control Procedures	13.5-5
13.5.2.2.8	Security Procedures	13.5-5
13.5.3	COMBINED LICENSE INFORMATION ITEM	13.5-6
13.5.4	REFERENCES	13.5-6
13.6	SECURITY	13.6-1
13.6.1	COMBINED LICENSE INFORMATION ITEM	13.6-1
13.6.2	ESP COL ACTION ITEMS	13.6-1
13.6.3	REFERENCES	13.6-1
13.7	FITNESS FOR DUTY	13.7-1
13.7.1	REFERENCES	13.7-1
APP. 13AA	CONSTRUCTION-RELATED ORGANIZATION	13AA-1
13AA.1.1.1.1	Design and Construction Activities	13AA-1
13AA.1.1.1.1.1	Principal Site-Related Engineering Work	13AA-1
13AA.1.1.1.1.2	Design of Plant and Ancillary Systems	13AA-3
13AA.1.1.1.1.3	Review and Approval of Plant Design Features	13AA-3
13AA.1.1.1.1.4	Site Layout with Respect to Environmental Effects and Security Provisions	13AA-3
13AA.1.1.1.1.5	Development of Safety Analysis Reports	13AA-3
13AA.1.1.1.1.6	Review and Approval of Material and Component Specifications	13AA-3
13AA.1.1.1.1.7	Procurement of Materials and Equipment	13AA-4
13AA.1.1.1.1.8	Management and Review of Construction Activities	13AA-4
13AA.1.1.1.2	Preoperational Activities	13AA-4
13AA.1.1.1.2.1	Development of Human Factors Engineering Design Objectives and Design Phase Review of Proposed Control Room Layouts	13AA-5
13AA.1.1.1.2.2	Preoperational and StartupTesting	13AA-5
13AA.1.1.1.2.3	Development and Implementation of Staff Recruiting and Training Programs	13AA-5

TABLE OF CONTENTS (Continued)

Section	Title	Page
APP. 13BB	STANDARD SUPPLEMENT TO GENERIC TEMPLATE NEI 06-13A	13BB-1
13BB.2.1.3	Licensed Operator Training Program Prior to Commercial Operation	13BB-1
13BB.2.1.3.1	Licensed Operator Continuing Training Prior to Commercial Operation	13BB-2
13BB.2.1.3.2	Licensed Operator Experience Requirements Prior to Commercial Operation	13BB-2
13BB.2.1.3.3	On-the-Job Training (OJT) Prior to Commercial Operation	13BB-3
13BB.2.1.3.4	Plant-Referenced Simulation Facilities Prior to Commercial Operation	13BB-3

LIST OF TABLES

Number	Title
13.1-202	Minimum On-Duty Operations Shift Organization for Two-Unit Plant
13.5-201	Pre-COL Phase Administrative Programs and Procedures

LIST OF FIGURES

Number	Title
13.1-201	Plant Management Organization
13.1-202	Shift Operations
13.1-203	Corporate and Engineering Organization
13AA-201	Construction Management Organization
13AA-202	Hiring Schedule for Plant Staff

CHAPTER 13

CONDUCT OF OPERATIONS

13.1 ORGANIZATIONAL STRUCTURE OF APPLICANT

This section of the referenced DCD is incorporated by reference with the following departures and/or supplements.

VEGP DEP 1.1-1 DCD Subsection 13.1.1, Combined License Information, is renumbered in this FSAR section to 13.1.4.

VEGP COL 13.1-1 This section describes organizational positions of a nuclear power station and owner/applicant corporations and associated functions and responsibilities. The position titles used in the text are generic and describe the function of the position. Table 13.1-201, Generic Position/Site-Specific Position Cross-Reference, provides a cross-reference to identify the corresponding site-specific position titles.

13.1.1 MANAGEMENT AND TECHNICAL SUPPORT ORGANIZATION

Southern Nuclear Operating Company, Inc. (SNC) has over 30 years of experience in the design, construction, and operation of nuclear generating plants. SNC, with its architectural engineering predecessor Southern Company Services, Inc., has designed, constructed, and currently operates six nuclear units at three sites: Edwin I. Hatch Nuclear Plant Units 1 and 2, Joseph M. Farley Nuclear Plant Units 1 and 2, and Vogtle Electric Generating Plant Units 1 and 2.

Vogtle 3 and 4 will be owned by Georgia Power Company, Oglethorpe Power Corporation, Municipal Electric Authority of Georgia, and the City of Dalton, and operated by SNC.

13.1.1.1 Design, Construction, and Operating Responsibilities

The chief executive officer has overall responsibility for functions involving design, construction, and operation. Line responsibilities for those functions are assigned to the senior vice president of nuclear development (ND) for the design and construction of new nuclear plants and to the chief nuclear officer (CNO) for operation. At the appropriate time after construction, the CNO accepts responsibility for the additional units at the VEGP site from the senior vice president-ND and then maintains direct control of nuclear plant operation through the site vice president, operations support, engineering, and other direct reports.

The first priority and responsibility of each member of the nuclear staff throughout the life of the plant is nuclear safety. Decision-making for plant activities is performed in a conservative manner with expectations of this core value regularly communicated to appropriate personnel by management interface, training, and plant directives. Lines of authority, decision making, and communication are clearly and unambiguously established to enable the understanding of the various project members, including contractors, that utility management is in charge of and directs on the project. Key executive and corporate management positions, functions, and responsibilities are discussed in Subsection 13.1.1.3.1. The corporate organization is shown in Figure 13.1-203. The management and technical support organization for design, construction, and preoperational activities is addressed in Appendix 13AA.

13.1.1.2 Provisions for Technical Support Functions

Before beginning preoperational testing, the site vice president, the vice president - fleet support, and the vice president-engineering establish the organization of managers, functional managers, supervisors, and staff sufficient to perform required functions for support of safe plant operation. These functions include the following:

- Nuclear, mechanical, civil, structural, electrical, thermal-hydraulic, metallurgical and material, and instrumentation and controls engineering
- Safety review
- Quality assurance, audit and surveillance
- Plant chemistry
- Radiation protection and environmental support
- Fueling and refueling operations support
- Training
- Maintenance support
- Operations support
- Fire protection
- Emergency planning
- Outside contractual assistance

In the event that plant personnel are not qualified to deal with a specific problem, the services of qualified individuals from other functions within the company or an

outside consultant are engaged. For example, major contractors, such as the reactor technology vendor or turbine generator manufacturer, provide technical support when equipment modifications or special maintenance problems are considered. Special studies, such as environmental monitoring, may be contracted to qualified consultants. Figure 13.1-201 illustrates the management and technical support organizations supporting operation of the plant. See Section 13.1.1.3.2 for description of responsibilities and authorities of management positions for organizations providing technical support. Table 13.1-201 shows the estimated number of positions required for each function.

Multiple layers of protection are provided to preserve unit integrity including organization. Organizationally, operators and other shift members are assigned to a specific unit, with the exception of some shared shift support supervisor and system operator positions. Physical separation of units helps to minimize wrong-unit activities. In addition, plant procedures and programs provide operating staff with methods to minimize human error including tagging programs, procedure adherence requirements, and training.

13.1.1.2.1 Engineering

The engineering department consists of system engineering, engineering programs, and engineering analysis. These groups are responsible for performing the site engineering activities as well as providing engineering expertise in other areas. Each of the engineering groups has a functional manager who reports to the engineering manager.

The engineering department is responsible for:

- Support of plant operations in the engineering areas of mechanical, structural, electrical, thermal-hydraulic, metallurgy and materials, electronic, instrument and control, and fire protection. Priorities for support activities are established based on input from the plant manager with emphasis on issues affecting safe operation of the plant.
- Engineering programs.
- Support of procurement, chemical, and environmental analysis and maintenance activities in the plant as requested by the plant manager.
- Performance of design engineering of plant modifications.
- Human factors engineering design process

Reactor engineering, part of system engineering, provides technical assistance in the areas of core design, core operations, core thermal limits, and core thermal hydraulics.

Engineering work may be contracted to and performed by outside companies in accordance with the quality assurance (QA) program.

Engineering resources are shared between units. A single management organization oversees the engineering work associated with the plant units.

13.1.1.2.2 Safety Review

Review and audit activities are addressed in Chapter 17. Oversight of safety review of plant programs, procedures, and activities is performed by a plant review board and a corporate safety review board.

Personnel who perform safety review are shared between units.

13.1.1.2.3 Quality Assurance

Safety-related activities associated with the operation of the plant are governed by QA direction established in Chapter 17 of the FSAR and the QA Program Description (QAPD). The requirements and commitments contained in the QAPD apply to activities associated with structures, systems, and components that are safety-related and are mandatory and must be implemented, enforced, and adhered to by individuals and organizations. QA requirements are implemented through the use of approved procedures, policies, directives, instructions, or other documents that provide written guidance for the control of quality-related activities and provide for the development of documentation to provide objective evidence of compliance. The QA function includes:

- Maintaining the QAPD.
- Coordinating the development of audit schedules.
- Auditing, performing surveillance, and evaluating nuclear division suppliers.
- Supporting general QA indoctrination and training for the nuclear station personnel.

The QA organization is independent of the plant management line organization.

Quality control (QC) inspection/testing activities to support plant operation, maintenance, and outages are independent of the plant management line organization.

Personnel resources of the QA organization are shared between units. A single management organization oversees the QA group for the plant units.

13.1.1.2.4 Chemistry

A chemistry program is established to monitor and control the chemistry of various plant systems such that corrosion of components and piping is minimized and radiation from corrosion byproducts is kept to levels that allow operations and maintenance with radiation doses as low as reasonably achievable.

The chemistry manager is responsible to the plant manager for maintaining chemistry programs and for monitoring and maintaining the water chemistry of plant systems. The staff of the chemistry department consists of laboratory technicians, support personnel, and supervisors who report to the chemistry manager.

Personnel resources of the chemistry organization are shared between units. A single management organization oversees the chemistry group for the plant units.

13.1.1.2.5 Radiation Protection

A radiation protection (RP) program is established to protect the health and safety of the public and the personnel working at the plant. The RP program is described in Chapter 12 of the FSAR. The program includes:

- Respiratory protection
- Personnel dosimetry
- Bioassay
- Survey instrument calibration and maintenance
- Radioactive source control
- Effluents and environmental monitoring and assessment
- Radioactive waste shipping
- Radiation work permits
- Job coverage
- Radiation monitoring and surveys

The RP department is staffed by RP technicians, support personnel, and supervisors who report to the functional manager in charge of radiation protection. To provide sufficient organizational freedom from operating pressures, the manager in charge of RP reports directly to the plant manager.

Personnel resources of the RP organization are shared between units. A single management organization oversees the RP group for both units.

The terms radiation protection and health physics are used interchangeably in function descriptions.

13.1.1.2.6 Fueling and Refueling Support

The function of fueling and refueling is performed by a combination of personnel from various departments including operations, maintenance, radiation protection, engineering, and reactor technology vendor or other contractor staff. Initial fueling and refueling operations are a function of the outage support organization. The manager in charge of outage support is responsible for planning and scheduling outages and for refueling support and reports to the plant manager.

Personnel resources of the outage support organization are shared between units. A single management organization oversees outage support work associated with the station units.

13.1.1.2.7 Training and Development

The training department is responsible for analysis, design, development, implementation and evaluation of plant training programs in accordance with regulatory requirements, accreditation standards, and company policies. The objective of the training programs is to qualify operations, maintenance, RP, chemistry, and engineering personnel to operate and maintain the plant in a safe and efficient manner and in compliance with the license, technical specifications, and applicable regulations. In addition, the training department administers plant access (general employee) training, radworker training, security training, and emergency response training. The training manager reports independently of the line organization to provide for independence from operating pressures. Plant training programs are described in Section 13.2 of the FSAR.

Personnel resources of the training department are shared between units. A single management organization provides oversight of plant training activities.

13.1.1.2.8 Maintenance Support

In support of maintenance activities, planners, schedulers, and parts specialists prepare work packages, acquire proper parts, and develop procedures that provide for the successful completion of maintenance tasks. Maintenance tasks are integrated into the plant schedule for evaluation of operating or safe shutdown risk elements and to provide for efficient and safe performance. The maintenance manager reports to the plant manager.

Personnel of the maintenance support organization are shared between units. A single management organization oversees the function of maintenance support for the plant units.

13.1.1.2.9 Operations Support

The operations support function is provided under the direction of the operations manager. Operations support includes the following programs:

- Operations procedures
- Operations surveillances
- Equipment tagging

13.1.1.2.10 Fire Protection

VEGP COL 9.5-1 The plant is committed to maintaining a fire protection program as described in Section 9.5. The site vice president is responsible for the fire protection program. Assigning the responsibilities at that level provides the authority to obtain the resources and assistance necessary to meet fire protection program objectives, resolve conflicts, and delegate appropriate responsibility to fire protection staff. The relationship of the site vice president to other staff personnel with fire protection responsibilities is shown on Figure 13.1-201. Fire protection for the facility is organized and administered by the engineer in charge of fire protection.

The site vice president, through the engineer in charge of fire protection, is responsible for developing and implementing the fire protection program including developing fire protection procedures, site personnel and fire brigade training, and inspections of fire protection systems and functions. The engineer in charge of fire protection reports to the site vice president and coordinates operations-related fire protection program activities with the operations manager or his designee. Functional descriptions of position responsibilities are included in appropriate procedures. Plant personnel are responsible for adhering to the fire protection/ prevention requirements detailed in Section 9.5. The site vice president has the lead responsibility for the overall site fire protection during construction of new units.

Personnel resources of the fire protection organization are shared between units. A single management organization oversees the fire protection group for the plant units.

13.1.1.2.11 Emergency Organization

VEGP COL 13.1-1 The emergency organization is a matrixed organization composed of personnel who have the experience, training, knowledge, and ability necessary to implement actions to protect the public in the case of emergencies. Managers and plant personnel assigned positions in the emergency organization are responsible for

supporting the emergency preparedness organization and emergency plan as required. The staff members of the emergency planning organization administrate and orchestrate drills and training to maintain qualification of plant staff members and develop procedures to guide and direct the emergency organization during an emergency. The staff is also responsible for maintaining emergency facilities and equipment. The functional manager in charge of emergency preparedness reports to the manager in charge of site support.

The site emergency plan organization is described in the Emergency Plan. Resources of the emergency planning group are shared between units. A single management organization oversees the emergency planning group for the plant units.

13.1.1.2.12 Outside Contractual Assistance

Contract assistance with vendors and suppliers of services not available from organizations established as part of utility staff is provided by the materials, purchasing, and contracts organization. Personnel in the materials, purchasing, and contracts organization perform the necessary functions to contract vendors of special services to perform tasks for which utility staff does not have the experience or equipment required. The functional manager in charge of materials, purchasing, and contracts reports to the department manager in charge of materials, purchasing, and contracts, and secondarily to the manager in charge of site support.

Resources of the materials, purchasing, and contracts organization are shared between units. A single management organization oversees the materials, purchasing, and contracts group for the plant units.

13.1.1.3 Organizational Arrangement

13.1.1.3.1 Executive Management Organization

The nuclear operations organization, under the supervision of the SNC president/ CEO, has direct responsibility for the operation and maintenance of Southern Company's nuclear plants. Executive management establishes expectations such that a high level of quality, safety, and efficiency is achieved in aspects of plant operations and support activities through an effective management control system and an organization selected and trained to meet the above objectives. A high-level chart of the utility headquarters and engineering organization is illustrated in Figure 13.1-203. Executives and management with direct line of authority for activities associated with operation of the plant are shown in Figure 13.1-201. The structure of the nuclear operations organization is described in the following paragraphs. Portions of the SNC Fleet Operations Support, Engineering, Corporate Services, General Counsel and External Affairs, and Human Resources organizations are also described in the following paragraphs.

13.1.1.3.1.1 President and CEO

The president/CEO is responsible for all aspects of operation of Southern Company's nuclear plants including employment decisions. The president/CEO is also responsible for all technical and administrative support activities provided by SNC and nonaffiliated contractors. The president/CEO directs the executive vice president, the senior vice president nuclear development, the vice president and corporate counsel; the chief financial officer and vice president corporate services; and the vice president-engineering in fulfillment of their responsibilities. The president/CEO reports to the Board of Directors with respect to all matters.

13.1.1.3.1.2 Senior Vice President — Nuclear Development

The senior vice president - nuclear development (SVP-ND) is responsible for new nuclear plant licensing, design, and construction as well as training and engineering for VEGP Units 3 and 4. The SVP-ND maintains control of nuclear plant construction through the management in charge of new nuclear plant licensing, project management, and the site vice president who reports to the SVP-ND until construction completion, following the guidelines of the Nuclear Development Quality Assurance Manual. The SVP-ND reports to the CEO.

13.1.1.3.1.3 Executive Vice President/Chief Nuclear Officer

The executive vice president (EVP) reports to the president/CEO. The EVP also serves as the CNO for SNC. The CNO assumes responsibility for the nuclear plant from the SVP-ND after construction of the plant. The CNO becomes responsible for overall plant nuclear safety and takes the measures needed to provide acceptable performance of the staff in operating, maintaining, and providing technical support to the plant. The EVP/CNO delegates authority and responsibility for the operation and support of the site through the site vice presidents, vice president of fleet operations support, vice president-engineering, and Fleet Oversight manager. It is the responsibility of the CNO to provide guidance and direction such that safety-related activities, including engineering, construction, operations, operations support, maintenance, and planning, are performed following the guidelines of the QA program for the operating units. The CNO has no ancillary responsibilities that might detract attention from nuclear safety matters. The EVP/CNO is also responsible for the safe, reliable, and efficient operation of the Edwin I. Hatch Nuclear Plant Units 1 and 2, the Joseph M. Farley Nuclear Plant Units 1 and 2, and the Vogtle Electric Generating Plant Units 1 and 2.

13.1.1.3.1.3.1 Site Vice President

The site vice president reports to the SVP-ND until construction completion. Following construction completion, the site vice president reports to the CNO. The site vice president is directly responsible for management and direction of activities associated with the efficient, safe, and reliable operation of the nuclear plant. The site vice president is assisted in management and technical support

activities by the plant manager, the site support manager, and the site engineering manager. The site vice president is responsible for the site fire protection program through the engineer in charge of fire protection. See Subsection 13.1.1.2.10.

13.1.1.3.1.3.2 Vice President-Fleet Operations Support

The vice president-fleet operations support reports to the executive vice president and is responsible for identifying and resolving fleet issues, and using trends, operating experience, and industry best practices to improve fleet performance. The vice president-fleet operations support directs the fleet improvement manager, the fleet maintenance and work controls manager, the fleet refueling outage manager, the fleet chemistry and health physics manager, the nuclear fleet security and emergency preparedness manager, and the fleet training and performance improvement manager.

13.1.1.3.1.3.2.1 Manager of Fleet Security and Emergency Planning

The Nuclear Fleet Security and Emergency Planning (NFSEP) Manager reports to the Vice President–Fleet Operations Support and is responsible for management of the NFSEP organization and the overall coordination of fleet security activities and programs, the corporate emergency planning programs (including the common Emergency Operations Facility) and the Access Authorization program. The NFSEP Manager also has responsibility for site emergency response communication. The NFSEP organization is responsible for providing information and support concerning emergency plans and security to the Nuclear Development organization.

13.1.1.3.1.3.2.2 Manager of Fleet Training and Performance Improvement

VEGP COL 18.10-1 The manager in charge of nuclear training is responsible for supporting the development of training programs and providing fleet guidance to the function manager in charge of training at the site. The manager in charge of nuclear training reports to the vice president-fleet operations support.

13.1.1.3.1.3.3 Fleet Oversight Manager (Quality Assurance)

VEGP COL 13.1-1 The Fleet Oversight Manager reports to the Executive Vice President for the operations activities and to the Senior Vice President–Nuclear Development for the new reactor activities and is responsible for developing and maintaining the quality assurance programs, evaluating compliance to the programs and managing the Fleet Oversight organization resources.

13.1.1.3.1.4 Vice President-Engineering

The vice president-engineering reports directly to the president/CEO. This organization includes both project-specific and generic engineering support organizations for operating plants. Additionally, the vice president-engineering is responsible for nuclear fuel and nuclear licensing activities as well as the design support function.

13.1.1.3.1.5 Design Support Manager

The design support manager reports to the vice president-engineering and acts as the design authority for SNC plants. The design support manager directs the activities associated with configuration management and major plant modifications.

13.1.1.3.1.5.1 Nuclear Licensing Manager

The nuclear licensing manager reports to the vice president - engineering and directs operating plant-specific licensing supervisors, the probabilistic risk assessment (PRA) supervisor, and their staffs. The licensing supervisors provide matrixed accountability to the site vice president for their respective plants.

13.1.1.3.1.5.2 Nuclear Fuels Manager

The nuclear fuels manager is responsible for providing nuclear fuel and related business and technical support consistent with the operational needs of the plant. Activities include scheduling and procuring uranium concentrates, conversion, enrichment, and fabrication services. The department provides expertise and support for high-level waste disposal management. The nuclear fuels manager is assisted by an engineering staff and reports directly to the vice president-engineering.

13.1.1.3.1.6 Vice President and General Counsel

The vice president and general counsel reports to the president/CEO. This individual is responsible for the legal, compliance, and external affairs associated with the SNC plants. This individual is also responsible for external affairs activities which include governmental affairs, corporate communications, and environmental affairs. The vice president and general counsel is also the corporate secretary and directs the managing attorney/compliance manager, the environmental affairs manager, and the public affairs manager.

13.1.1.3.1.7 Chief Financial Officer and Vice President-Corporate Services

The chief financial officer (CFO) and vice president-corporate services reports directly to the president/CEO. The chief financial officer and vice president-corporate services is responsible for providing corporate administrative services,

corporate security, nuclear operations related support functions (e.g., fitness for duty), supply chain management, general services, and financial services.

VEGP COL 13.1-1

13.1.1.3.1.7.1 Supply Chain Manager

The supply chain general manager is responsible for providing direction and guidance to the site-located functional manager in charge of supply chain. The supply chain manager reports to the CFO/vice president-corporate services.

13.1.1.3.2 Site Support Organization

As stated above, the site vice president is responsible for direct management of the plant, including industrial relations, planning, coordination, direction of operation, training, maintenance, refueling, and technical activities. Reporting to the site vice president in supportive roles are the site support manager and the site engineering manager.

13.1.1.3.2.1 Site Support Manager

The site support manager is responsible for supporting the operating units. Reporting to the site support manager are the training and emergency preparedness manager, the site security manager, and the performance analysis supervisor.

13.1.1.3.2.2 Site Engineering Manager

The site engineering manager is the onsite lead position for engineering and reports to the site vice president. The site engineering manager is responsible for engineering activities related to the operation or maintenance of the plant and design change implementation support activities. The site engineering manager directs functional managers responsible for system engineering, design engineering, engineering programs, and engineering analysis.

13.1.1.4 Qualifications of Technical Support Personnel

VEGP COL 18.6-1

The qualifications of managers and supervisors of the technical support organization meet the qualification requirements in education and experience for those described in ANSI/ANS-3.1-1993 (Reference 201) as endorsed and amended by Regulatory Guide 1.8. The qualification and experience requirements of headquarters staff is established in corporate policy and procedure manuals.

13.1.2 OPERATING ORGANIZATION

VEGP COL 13.1-1

13.1.2.1 Plant Organization

As stated above, the site vice president is responsible for direct management of the plant, including industrial relations, planning, coordination, direction of operation, training, maintenance, refueling, and technical activities. Reporting to the site vice president, in addition to the supportive roles, is the plant manager.

The plant management, technical support, and plant operating organizations are shown in Figure 13.1-201. The on-shift operating organization is presented in Figure 13.1-202 which shows those positions requiring NRC licenses. Additional personnel are required to augment normal staff during outages.

Nuclear plant employees are responsible for reporting problems with plant equipment and facilities. They are required to identify and document equipment problems in accordance with the QA program. QA program requirements as they apply to the operating organization are described in Chapter 17. Administrative procedures or standing orders include:

- Establishment of a QA program for the operational phase.
- Preparation of procedures necessary to carry out an effective QA program. See Section 13.5 for description of the plant procedure program.
- A program for review and audit of activities affecting plant safety. See Section 17.5 for description of plant review and audit programs.
- Programs and procedures for rules of practice as described in Section 5.2 of N18.7-1976/ANS-3.2 (Reference 203).

Managers and supervisors within the plant operating organization are responsible for establishing goals and expectations for their organization and to reinforce behaviors that promote radiation protection. Specifically, managers and supervisors are responsible for the following, as applicable to their position within the plant organization:

- Interface directly with RP staff to integrate RP measures into plant procedures and design documents and into the planning, scheduling, conduct, and assessment of operations and work.
- Notify RP personnel promptly when RP problems occur or are identified, take corrective actions, and resolve deficiencies associated with operations, procedures, systems, equipment, and work practices.
- Ensure department personnel receive RP training and periodic retraining, in accordance with 10 CFR 19 so that they are properly instructed and briefed for entry into restricted areas.

- Periodically observe and correct, as necessary, radiation worker practices.
- Support RP management in implementing the RP program.
- Maintain exposures to site personnel ALARA.

13.1.2.1.1 Plant Manager

The plant manager reports to the site vice president, is responsible for overall safe operation of the plant, and has control over those onsite activities necessary for safe operation and maintenance of the plant including the following:

- Operations
- Maintenance and modification
- Chemistry and radiochemistry
- Outage management

Additionally, the plant manager has overall responsibility for occupational and public radiation safety. RP responsibilities of the plant manager are consistent with the guidance in Regulatory Guide 8.8 and Regulatory Guide 8.10 including the following:

- Provide management RP policy throughout the plant organization.
- Provide an overall commitment to RP by the plant organization.
- Interact with and support the manager in charge of RP on implementation of the RP program.
- Support identification and implementation of cost-effective modifications to plant equipment, facilities, procedures, and processes to improve RP controls and reduce exposures.
- Establish plant goals and objectives for RP.
- Maintain exposures to site personnel ALARA.
- Support timely identification, analysis, and resolution of RP protection problems (e.g., through the plant corrective action program).
- Provide for training to site personnel on RP in accordance with 10 CFR 19.
- Establish an ALARA committee with delegated authority from the plant manager that includes, at a minimum, the managers in charge of operations, maintenance, engineering, and RP to help provide for effective

implementation of line organization responsibilities for maintaining worker doses ALARA.

As described in Subsection 13.1.2.1.2.1, the shift manager is the plant manager's direct representative for the conduct of operations. The succession of authority includes the authority to issue standing or special orders as required.

In the site vice president's absence, the plant manager assumes responsibility for the plant. The vice president-Vogtle will designate in writing other qualified personnel to assume overall plant responsibility in his absence. The line of succession of authority and responsibility for overall operations in the event of unexpected events of a temporary nature is:

a. Operations manager

b. Site support manager

c. Maintenance manager

13.1.2.1.2 Operations Department

Operations activities are conducted with safety of personnel, the public, and equipment as the overriding priority. The operations department is responsible for:

- Maintaining the plant in a safe condition at all times.
- Operating station equipment.
- Monitoring and surveillance of safety and nonsafety-related equipment.
- Fuel loading.
- Providing the nucleus of emergency and firefighting teams.

The operations department maintains sufficient licensed and senior licensed operators to staff the control room continuously using a crew rotation system. The operations department is under the authority of the operations manager, who, through his direct reports, directs the day-to-day operation of the plant.

Specific duties, functions, and responsibilities of key shift members are discussed in Subsection 13.1.2.1.2.1 and in plant administrative procedures and the technical specifications. The minimum shift manning requirements are shown in Table 13.1-202. Prior to fuel arriving on site, the necessary positions for unit operations will be filled.

Some resources of the operations organization are shared between units. Administrative and support personnel perform their duties on either unit. Additional operations staff is required to fill the on-shift staffing requirements of the

additional units. To operate, or supervise the operation of more than one unit, an operator (senior reactor operator [SRO] or reactor operator [RO]) must hold an appropriate, active license for each unit. A single management organization oversees the operations group for the plant units. See Table 13.1-201 for estimated number of staff in the operations department.

The operations support section is staffed with sufficient personnel to provide support activities for the operating shifts and overall operations department. The following is an overview of the operations organization.

13.1.2.1.2.1 Operations Manager

The operations manager has overall responsibility for the day-to-day operation of the plant. Reporting to the operations manager are the operations superintendents, operation support superintendent, and the shift managers. The operations superintendent (daily) directs day-to-day planning and provides technical support; the operations support superintendent supervises staff support functions and coordinates training of operations personnel. The operations superintendent (outage) prepares for and conducts outage-related activities and oversees outage work activities, surveillances, and tests.

The shift manager is responsible for seeing that plant operations are conducted in accordance with appropriate standing orders, unit operating procedures, and technical specifications. The shift manager's principal responsibility is ensuring safe operation during his assigned shift. The shift manager shall possess an SRO license.

The shift technical advisor position meets the intent of NUREG-0660, as clarified by NUREG-0737, Item I.A.1.1. The shift technical advisor position may be eliminated if the qualifications of the shift manager, shift supervisor, or SRO-licensed shift support supervisor meet the requirements of the shift technical advisor position. Section 13.2 describes shift technical advisor training, and Subsection 13.1.3 describes shift technical advisor qualifications.

A shift supervisor for each unit is under the supervision of the shift manager. Each shift supervisor shall possess an SRO license. Each shift supervisor is responsible for the safe and efficient operation of the unit. The shift supervisor for each unit keeps a record of the shift. The shift supervisor is responsible for directing and monitoring the activities of the ROs in accordance with appropriate standing orders, plant procedures, and technical specifications.

Also reporting to the shift supervisors are the shift support supervisors, plant operators, and systems operators.

Plant operators monitor the plant status and operate equipment as needed to maintain control of the various plant processes. Most of their duties are located in the control room; although, they may perform inspections in other areas of the plant.

13.1.2.1.3 Conduct of Operations

VEGP COL 13.1-1 Plant operations are controlled and/or coordinated through the control room. Maintenance activities, surveillances, and removal from/return to service of structures, systems, and components affecting the operation of the plant may not commence without the approval of senior control room personnel. The rules of practice for control room activities, as described by administrative procedures, which are based on Regulatory Guide 1.114, address the following:

- Position/placement of operator at the controls workstation and the expected area of the control room where the majority of the time of the supervisor/manager in charge on shift should be spent.
- Definition and outline of “surveillance area” and requirement for continuous surveillance by the operator at the controls.
- Relief requirements for operator at the controls and the supervisor/ manager in charge on shift.

In accordance with 10 CFR 50.54:

- Reactivity controls may be manipulated only by licensed ROs and SROs except as allowed for training under 10 CFR 55.
- Apparatus and mechanisms other than controls that may affect reactivity or power level of the reactor shall be operated only with the consent of the operator at the controls or the manager/supervisor in charge on-shift.
- During operation of the facility in modes other than cold shutdown or refueling, an SRO shall be in the control room and a licensed RO or SRO shall be present at the controls.

13.1.2.1.4 Operating Shift Crews

Plant administrative procedures implement the required shift staffing. These procedures establish crews with sufficient qualified plant personnel to staff the operational shifts and be readily available in the event of an abnormal or emergency situation. The objective is to operate the plant with the required staff and to develop work schedules that minimize overtime for plant staff members who perform safety-related functions. Work hour limitations and shift staffing requirements defined by TMI Action Plan I.A.1.3 are retained in plant procedures. When overtime is necessary, the provisions in the technical specifications and the plant administrative procedures apply. Shift crew staffing plans may be modified during refueling outages to accommodate safe and efficient completion of outage work in accordance with the proceduralized work hour limitations.

The minimum composition of the operating shift crew is contingent on the unit operating status. Position titles, license requirements, and minimum shift staffing for various modes of operation are contained in technical specifications, administrative procedures, and Table 13.1-202, and illustrated in Figure 13.1-202.

13.1.2.1.5 Fire Brigade

The station is designed and the fire brigade organized to be self-sufficient with respect to firefighting activities. The fire brigade is organized to deal with fires and related emergencies that could occur. It consists of a fire brigade leader and a sufficient number of team members to be consistent with the equipment that must be put in service during a fire emergency. A sufficient number of trained and physically qualified fire brigade members are available on site during each shift. The fire brigade consists of at least five members on each shift. Members of the fire brigade are knowledgeable of building layout and system design. The assigned fire brigade members for any shift does not include the shift manager nor any other members of the minimum shift operating crew necessary for safe shutdown of the unit. It does not include any other personnel required for other essential functions during a fire emergency. Fire brigade members for a shift are designated in accordance with established procedures at the beginning of the shift.

13.1.3 QUALIFICATIONS OF NUCLEAR PLANT PERSONNEL

VEGP COL 18.6-1

13.1.3.1 Qualification Requirements

VEGP COL 13.1-1

Qualifications of managers, supervisors, operators, and technicians of the operating organization meet the qualification requirements in education and experience for those described in ANSI/ANS-3.1-1993 (Reference 201), as endorsed and amended by Regulatory Guide 1.8, except for cold license operators as discussed in Appendix 13BB.

13.1.3.2 Qualifications of Plant Personnel

Résumés and/or other documentation of qualification and experience of initial appointees to appropriate management and supervisory positions are available for review by regulators upon request after position vacancies are filled.

13.1.4 COMBINED LICENSE INFORMATION ITEM

VEGP COL 13.1-1

This COL item is addressed in Subsections 13.1.1 through 13.1.3.

13.1.5 REFERENCES

201. American Nuclear Society, “American National Standard for Selection, Qualification, and Training of Personnel for Nuclear Power Plant,” ANSI/ ANS -3.1-1993.

202. U.S. Nuclear Regulatory Commission, “Generic Letter 86-04, Policy Letter, Engineering Expertise on Shift.”

203. American Nuclear Society, “American National Standard for Administrative Controls and Quality Assurance for the Operational Phase of Nuclear Power Plants,” N18.7-1976/ANS-3.2.

VEGP COL 18.6-1

Table 13.1-201 (Sheet 1 of 5)
Generic Position/Site-Specific Position Cross-Reference

VEGP COL 13.1-1

Nuclear Function	Function Position - ANSI/ANS-3.1-1993 section reference		Nuclear Plant Position (Site-Specific)	Expected Positions single unit	Expected additional positions 2nd unit
Executive management	chief executive officer		Chief Executive Officer (CEO)	1	-
	chief operating officer		N/A	N/A	-
	chief nuclear officer		Chief Nuclear Officer	1	-
	executive, nuclear generation and development		Senior Vice President, Nuclear Development	1	-
Nuclear support	executive, operations support		Fleet Operations Vice President	1	-
Plant management	executive		Site Vice President	1	-
	plant manager	4.2.1	Plant Manager	1	-
Engineering	executive		Engineering Vice President	1	-
	manager	4.2.4	Engineering Manager	1	-
system engineering	functional manager	4.3.9	Engineering Supervisor	1	-
	system engineer		Engineer	23	10
design engineering	functional manager	4.3.9	Design Manager	1	-
	design engineer		Design Engineer	15	2
engineering programs	functional manager	4.3.9	Engineering Supervisor	1	-
	programs engineer		Engineer	10	2
safety and engineering analysis	functional manager	4.3.9	Performance Improvement Supervisor	1	-
	analysis engineer		Engineer	3	-

VEGP COL 18.6-1

Table 13.1-201 (Sheet 2 of 5)
Generic Position/Site-Specific Position Cross-Reference

VEGP COL 13.1-1

Nuclear Function	Function Position - ANSI/ANS-3.1-1993 section reference		Nuclear Plant Position (Site-Specific)	Expected Positions single unit	Expected additional positions 2nd unit
reactor engineering	functional manager	4.3.9	Engineering Supervisor	1	-
	reactor engineer		Engineer	3	1
Maintenance	manager	4.2.3	Maintenance Manager	1	-
instrumentation and control	functional manager	4.3.4	Team Leader, Instrumentation and Control	1	-
	supervisor	4.4.7	Assistant Team Leader, Instrumentation and Control	4	4
	technician	4.5.3.3	Instrumentation and Control Technician	30	15
mechanical	functional manager	4.3.6	Team Leader, Mechanical	1	-
	supervisor	4.4.9	Assistant Team Leader, Mechanical	2	-
	technician	4.5.7.2	Mechanic	40	15
electrical	functional manager	4.3.5	Team Leader, Electrical	1	-
	supervisor	4.4.8	Assistant Team Leader, Electrical	2	-
	technician	4.5.7.1	Electrician	20	10
support	functional manager	4.3	Maintenance Superintendent	1	-
Operations	manager	4.2.2	Operations Manager	1	-
operations, plant	functional manager	4.3.8	Operations Superintendent	1	-
operations, admin	functional manager	4.3.8	Operations Superintendent	1	-
operations, (on-shift)	functional manager	4.4.1	Shift Manager	5	5

VEGP COL 18.6-1

Table 13.1-201 (Sheet 3 of 5)
Generic Position/Site-Specific Position Cross-Reference

VEGP COL 13.1-1

Nuclear Function	Function Position - ANSI/ANS-3.1-1993 section reference		Nuclear Plant Position (Site-Specific)	Expected Positions single unit	Expected additional positions 2nd unit
	supervisor	4.4.2	Shift Supervisor	5	5
	licensed operator	4.5.1	Plant Operator	10	10
	non-licensed operator	4.5.2	System Operator	30	30
	shift technical advisor	4.6.2	Shift Technical Advisor	5	5
Operations - rad waste	supervisor	4.4	N/A	-	-
Fire protection	supervisor	4.4	Fire Protection Engineer	1	-
Radiation protection	functional manager	4.3.3	Health Physics Manager	1	-
	supervisor	4.4.6	Health Physics Foreman	5	-
	technician	4.5.3.2	Health Physics Technician	18	9
	ALARA specialist		Health Physicist	3	1
Chemistry	functional manager	4.3.2	Chemistry Manager	1	-
	supervisor	4.4.5	Chemistry Foreman	5	-
	technician	4.5.3.1	Chemistry Technician	12	12
Nuclear safety assurance	manager	4.2	Nuclear Licensing Manager	1	-
licensing	functional manager	4.3	Site Nuclear Licensing Supervisor	1	-
	supervisor		N/A	-	-
	licensing engineer		Licensing Engineer	6	-

VEGP COL 18.6-1

Table 13.1-201 (Sheet 4 of 5)
Generic Position/Site-Specific Position Cross-Reference

VEGP COL 13.1-1

Nuclear Function	Function Position - ANSI/ANS-3.1-1993 section reference		Nuclear Plant Position (Site-Specific)	Expected Positions single unit	Expected additional positions 2nd unit
corrective action	functional manager	4.3	Fleet Training and Performance Improvement Manager	1	-
	corrective action specialist		Corrective Action Program Coordinator	2	1
emergency preparedness	functional manager	4.3	Emergency Preparedness Supervisor	1	-
	EP planner		EP Coordinator	2	-
Training	functional manager	4.3.1	Training Manager	1	-
	supervisor ops trng	4.4.4	Nuclear Operations Training Supervisor	1	1
	ops training instructor		Nuclear Operations Training Instructor	6	6
	supervisor tech staff/ maint trng		Training Supervisor	1	-
	tech staff/maint instructors		Nuclear Plant Instructor	8	2
Purchasing, and contracts	functional manager	4.3	Supply Chain Manager	1	-
Security	functional manager	4.3	Security Manager	1	-
Planning and scheduling	functional manager	4.3	Outage and Scheduling Manager	1	-
	functional manager	4.3	N/A	-	-
	supervisor	4.4	Scheduling Supervisor	2	-
Quality assurance	functional manager	4.3.7	Manager, Fleet Oversight	1	-

VEGP COL 18.6-1

Table 13.1-201 (Sheet 5 of 5)
Generic Position/Site-Specific Position Cross-Reference

VEGP COL 13.1-1

Nuclear Function	Function Position - ANSI/ANS-3.1-1993 section reference		Nuclear Plant Position (Site-Specific)	Expected Positions single unit	Expected additional positions 2nd unit
	supervisor	4.4.13	Quality Assurance Supervisor	1	-
	QA auditor		QA Auditor	6	2
	supervisor	4.4.13	Quality Control Supervisor	2	-
	QC inspector		QC Inspector	4	2
Startup testing	supervisor	4.4.11	Startup Testing Supervisor	1	-
	startup test engineer		Startup Test Engineer	6	-
	supervisor	4.4.12	Preop Testing Supervisor	1	-
	preop test engineer		Preop Test Engineer	20	-

VEGP COL 13.1-1
VEGP COL 18.6-1

Table 13.1-202
Minimum On-Duty Operations Shift Organization for Two-Unit Plant

Units Operating	Two Units Two Control Rooms
All Units Shutdown	1 SM (SRO) 2 RO 3 NLO
One Unit Operating[a]	1 SM (SRO) 1 SRO 3 RO 3 NLO
Two Units Operating[a]	1 SM (SRO) 2 SRO 4 RO 4 NLO
SM – shift manager SRO – Licensed Senior Reactor Operator	RO – Licensed Reactor Operator NLO – non-licensed operator

a) Operating modes other than cold shutdown or refueling.

Notes:

1. In addition, one Shift Technical Advisor (STA) is assigned per shift during plant operation. A shift manager or another SRO on shift, who meets the qualifications for the combined Senior Reactor Operator/Shift Technical Advisor position, as specified for option 1 of Generic Letter 86-04, (Reference 202) the commission's policy statement on engineering expertise on shift, may also serve as the STA. If this option is used for a shift, then the separate STA position may be eliminated for that shift.
2. In addition to the minimum shift organization above, during refueling a licensed senior reactor operator or senior reactor operator limited (fuel handling only) is required to directly supervise any core alteration activity.
3. A shift manager/supervisor (SRO licensed for each unit that is fueled), shall be on site at all times when at least one unit is loaded with fuel.
4. A radiation protection technician shall be on site at all times when there is fuel in a reactor.
5. A chemistry technician shall be on site during plant operation in modes other than cold shutdown or refueling.
6. To operate, or supervise the operation of more than one unit, an operator (SRO or RO) must hold an appropriate, current license for each unit.

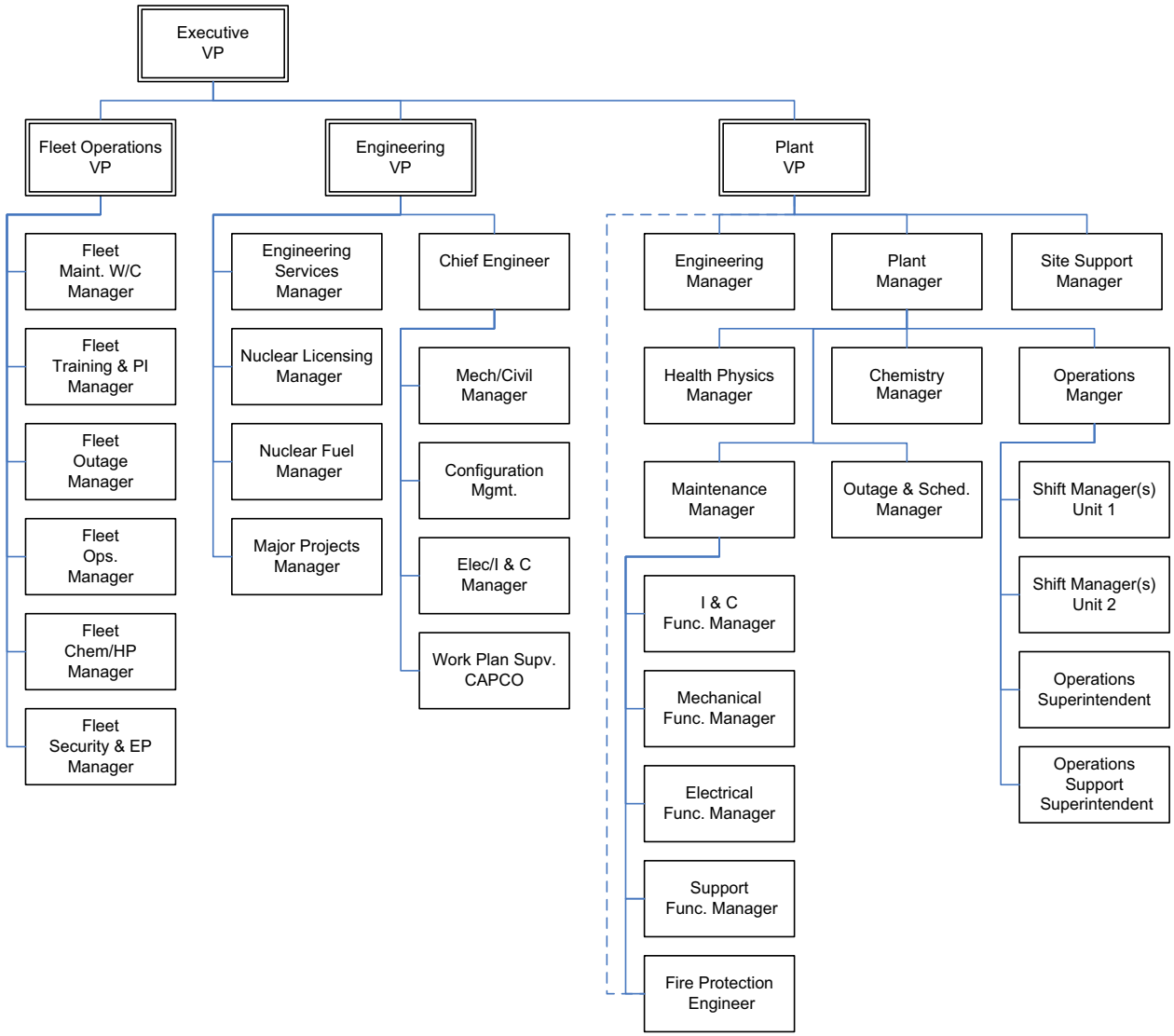

Figure 13.1-201
Plant Management Organization

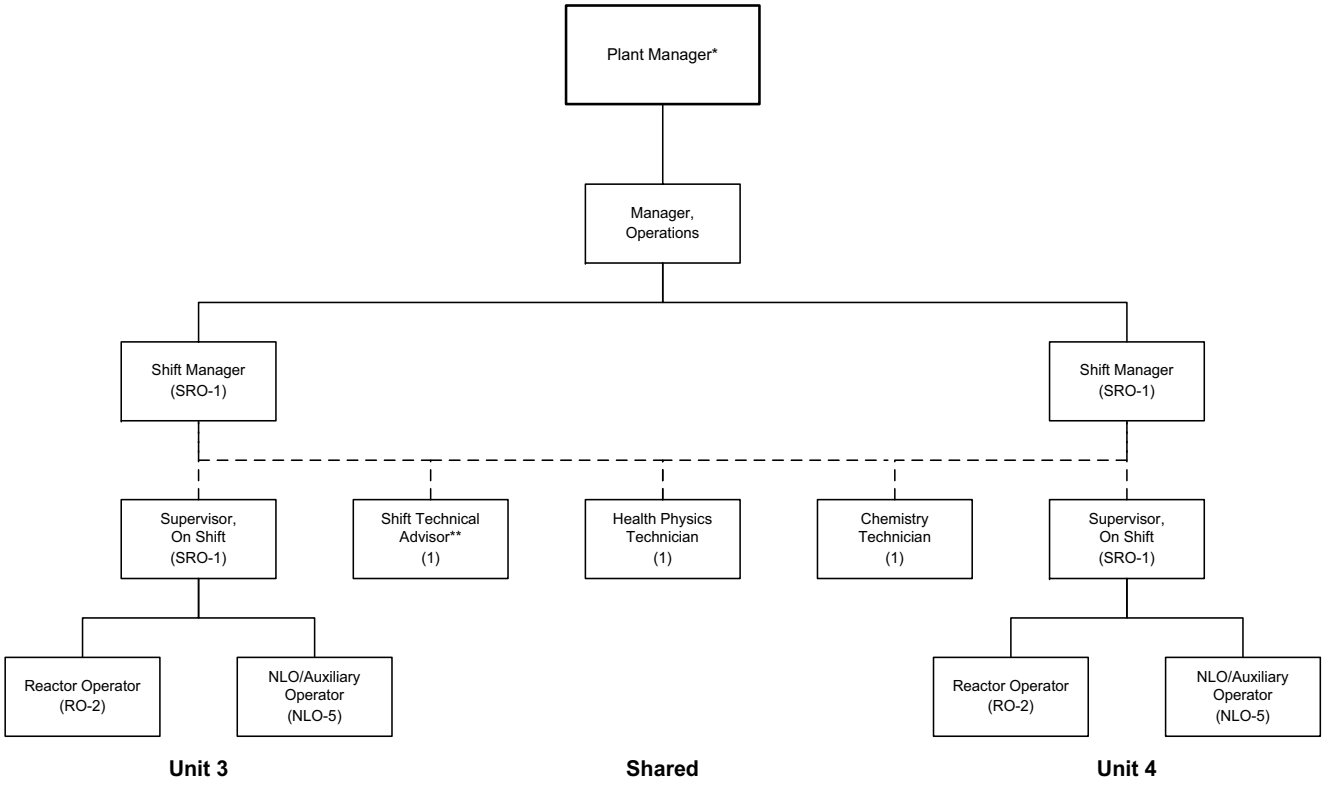

*position SRO-qualified
**may be met by onshift combined SRO/STA
SRO - licensed senior reactor operator
RO - licensed reactor operator
NLO - non-licensed operator
Shift Manning - 5 shifts (minimum)
(No.) - indicates number of positions per shift

VEGP COL 13.1-1

Figure 13.1-202
Shift Operations

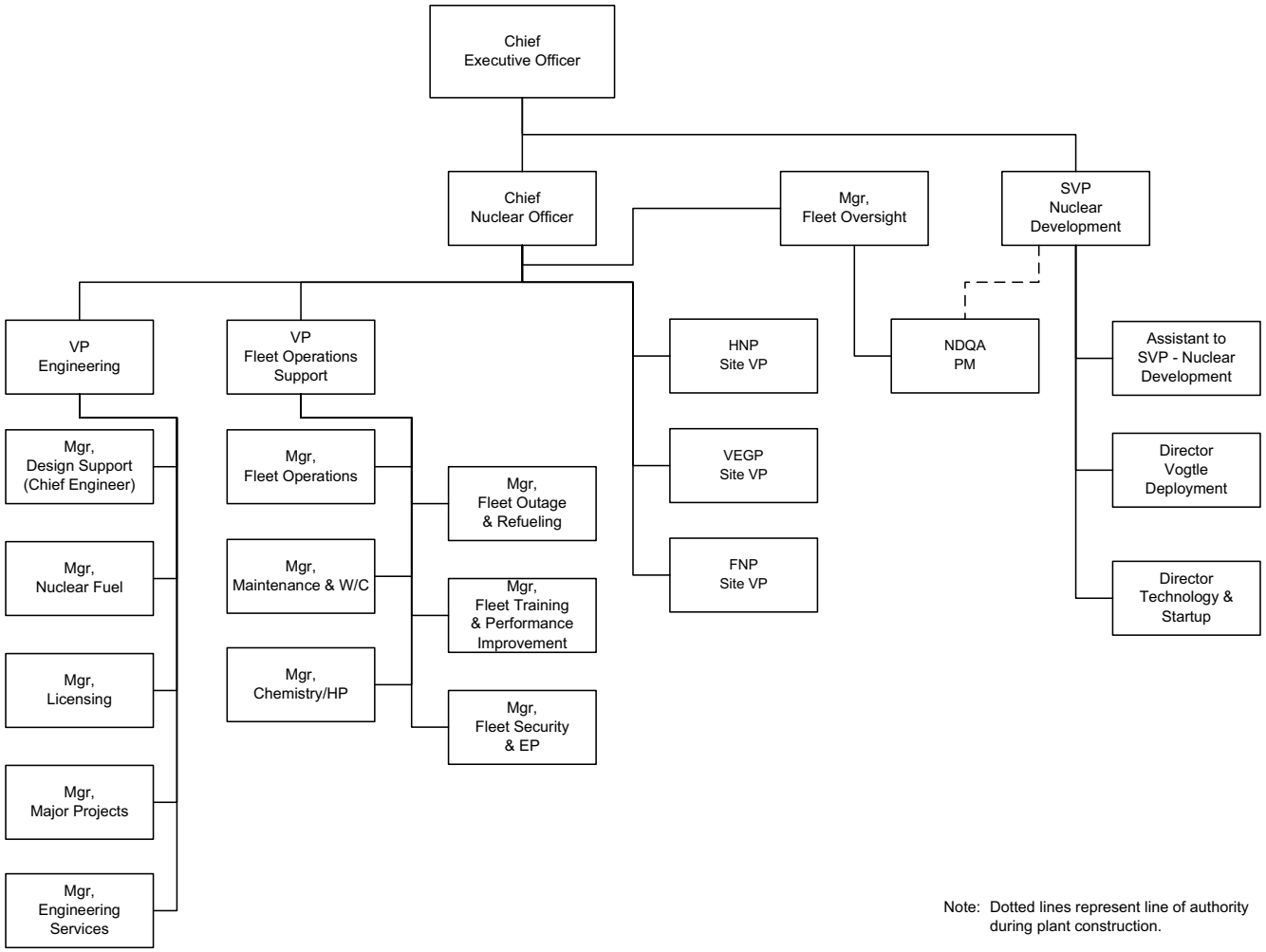

VEGP COL 13.1-1

Figure 13.1-203
Corporate and Engineering Organization

13.2 TRAINING

This section of the referenced DCD is incorporated by reference with the following departures and/or supplements.

STD COL 13.2-1 This section incorporates by reference NEI 06-13A, Technical Report on a Template for an Industry Training Program Description. See Table 1.6-201.

Appendix 13BB provides supplemental information to NEI 06-13A to address cold license operator training.

Table 13.4-201 provides milestones for training implementation.

STD COL 18.10-1 Operators involved in the Human Factors Engineering Verification and Validation (V&V) Program receive additional training specific to the task of performing V&V. A systematic approach to training is incorporated in developing this training program along with input from WCAP-14655, Designer's Input to the Training of the Human Factors Engineering Verification and Validation Personnel (Reference 201).

13.2.1 COMBINED LICENSE INFORMATION ITEM

STD COL 13.2-1 This COL Item is addressed in Section 13.2.

13.2.2 REFERENCES

---

201. Westinghouse, "Designer's Input to the Training of the Human Factors Engineering Verification and Validation Personnel," WCAP-14655, Revision 1, August 1996.

13.3 EMERGENCY PLANNING

This section of the referenced DCD is incorporated by reference with the following departures and/or supplements.

This section of the referenced ESPA SSAR is incorporated by reference with the following variances and/or supplements.

Add the following text after the last paragraph of ESPA SSAR Section 13.3.

VEGP SUP 13.3-1 The emergency planning information is submitted to the Nuclear Regulatory Commission as a separate licensing document. The emergency plan is provided in the VEGP Units 3 and 4 Early Site Permit Application.

STD COL 13.3-1 Post-72 hour support actions, as discussed in DCD Subsections 1.9.5.4 and 6.3.4, are addressed in DCD Subsections 6.2.2, 8.3, and 9.1.3. Provisions for establishing post-72 hour ventilation for the main control room, instrumentation and control rooms, and dc equipment rooms are established in operating procedures.

STD COL 13.3-2 The emergency plan describes the plans for coping with emergency situations, including communications interfaces and staffing of the emergency operations facility.

STD SUP 13.3-1 Table 13.4-201 provides milestones for emergency planning implementation.

Subsection 13.3.1 of the DCD is renumbered as 13.3.6 to allow for sequential numbering and incorporation of the ESPA SSAR Emergency Planning information in the FSAR.

VEGP DEP 1.1-1 ### 13.3.6 COMBINED LICENSE INFORMATION ITEM

STD COL 13.3-1 This COL Item is addressed in Section 13.3.

STD COL 13.3-2 This COL Item is addressed in Section 13.3 and in the Emergency Plan.

Add the following sections after Subsection 13.3.6.

VEGP SUP 13.3-2 ## 13.3.7 NEW OR ADDITIONAL INFORMATION

VEGP COL 13.3-1 In accordance with 10CFR 52.79(b)(4) and 10CFR 50.54(q), no new or additional emergency planning information that would materially change the bases for compliance with emergency planning requirements has been identified.

VEGP SUP 13.3-3 ## 13.3.8 ESP COL ACTION ITEMS

VEGP ESP COL 13.3-1 SNC will submit a revision to the VEGP Units 3 and 4 Emergency Action Levels (EALs) within 90 days of NRC endorsement of NEI 07-01.

VEGP ESP COL 13.3-2 SNC will submit a fully developed set of VEGP Units 3 and 4 EALs when design details are completed or propose ITAAC for those elements of the EAL scheme not completed.

VEGP ESP COL 13.3-3
VEGP DEP 18.8-1 Location of the Technical Support Center (TSC) is described in the ESPA emergency plan.

13.4 OPERATIONAL PROGRAMS

This section of the referenced DCD is incorporated by reference with the following departures and /or supplements.

STD COL 13.4-1 Operational programs are specific programs that are required by regulations. Table 13.4-201 lists each operational program, the regulatory source for the program, the section of the FSAR in which the operational program is described, and the associated implementation milestone(s).

13.4.1 COMBINED LICENSE INFORMATION ITEM

STD COL 13.4-1 This COL Item is addressed in Section 13.4.

13.4.2 REFERENCES

201. ASME Boiler and Pressure Vessel Code (B&PVC), “Section XI - Rules for Inservice Inspection of Nuclear Power Plant Components.”

202. ASME “OM Code for the Operation and Maintenance of Nuclear Power Plants.”

STD COL 13.4-1

Table 13.4-201 (Sheet 1 of 7)
Operational Programs Required by NRC Regulations

Item	Program Title	Program Source (Required by)	FSAR Section	Implementation Milestone	Implementation Requirement
1.	Inservice Inspection Program	10 CFR 50.55a(g)	5.2.4, 6.6	Prior to Commercial service	10 CFR 50.55a(g), ASME XI 2001 2004 IWA 2430(b) (Reference 201)
2.	Inservice Testing Program	10 CFR 50.55a(f); 10 CFR Part 50, Appendix A	3.9.6, 5.2.4	After generator online on nuclear heat[(a)]	10 CFR 50.55a(f), ASME OM Code (Reference 202)
3.	Environmental Qualification Program	10 CFR 50.49(a)	3.11	Prior to initial fuel load	License Condition
4.	Preservice Inspection Program	10 CFR 50.55a(g)	5.2.4, 6.6	Completion prior to initial plant start-up	10 CFR 55a(g); ASME Code Section XI IWB-2200(a) (Reference 201)
5.	Reactor Vessel Material Surveillance Program	10 CFR 50.60; 10 CFR 50.61; 10 CFR Part 50, Appendix H	5.3.2.6	Prior to initial criticality	License Condition
6.	Preservice Testing Program	10 CFR 50.55a(f)	3.9.6	Prior to initial fuel load	License Condition

STD COL 13.4-1

Table 13.4-201 (Sheet 2 of 7)
Operational Programs Required by NRC Regulations

Item	Program Title	Program Source (Required by)	FSAR Section	Implementation Milestone	Implementation Requirement
7.	Containment Leakage Rate Testing Program	10 CFR 50.54(o); 10 CFR 50, Appendix A (GDC 52); 10 CFR 50, Appendix J	6.2.5.1	Prior to Mode 4	License Condition
8.	Fire Protection Program	10 CFR 50.48	9.5.1.8	Prior to receipt of fuel onsite Prior to initial fuel load	License Condition
9.	Process and Effluent Monitoring and Sampling Program:				
	Radiological Effluent Technical Specifications/Standard Radiological Effluent Controls	10 CFR 20.1301 and 20.1302; 10 CFR 50.34a; 10 CFR 50.36a; 10 CFR 50, Appendix I, Section II and IV	11.5	Prior to initial fuel load	License Condition
	Offsite Dose Calculation Manual	Same as above	11.5	Prior to initial fuel load	License Condition
	Radiological Environmental Monitoring Program	Same as above	11.5	Prior to initial fuel load	License Condition
	Process Control Program	Same as above	11.4	Prior to initial fuel load	License Condition

STD COL 13.4-1

Table 13.4-201 (Sheet 3 of 7)
Operational Programs Required by NRC Regulations

Item	Program Title	Program Source (Required by)	FSAR Section	Implementation Milestone	Implementation Requirement
10.	Radiation Protection Program	10 CFR 20.1101	12.5	1. Prior to initial receipt of by-product, source, or special nuclear materials (excluding Exempt Quantities as described in 10 CFR 30.18) 2. Prior to receipt of fuel onsite 3. Prior to initial fuel load 4. Prior to first shipment of radioactive waste	License Condition
11.	Non Licensed Plant Staff Training Program	10 CFR 50.120	13.2	18 months prior to scheduled date of initial fuel load	10 CFR 50.120(b)

STD COL 13.4-1

Table 13.4-201 (Sheet 4 of 7)
Operational Programs Required by NRC Regulations

Item	Program Title	Program Source (Required by)	FSAR Section	Implementation	
				Milestone	Requirement
12.	Reactor Operator Training Program	10 CFR 55.13; 10 CFR 55.31; 10 CFR 55.41; 10 CFR 55.43; 10 CFR 55.45	13.2	18 months prior to scheduled date of initial fuel load	License Condition
13.	Reactor Operator Requalification Program	10 CFR 50.34(b); 10 CFR 50.54(i); 10 CFR 55.59	13.2	Within 3 months after the date the Commission makes the finding under 10 CFR 52.103(g)	10 CFR 50.54 (i-1)
14.	Emergency Planning	10 CFR 50.47; 10 CFR 50, Appendix E	13.3	Full participation exercise conducted within 2 years of scheduled date for initial loading of fuel.	10 CFR Part 50, Appendix E, Section IV.F.2.a(ii)
				Onsite exercise conducted within 1 year before the schedule date for initial loading of fuel	10 CFR Part 50, Appendix E, Section IV.F.2.a(ii)

STD COL 13.4-1

Table 13.4-201 (Sheet 5 of 7)
Operational Programs Required by NRC Regulations

Item	Program Title	Program Source (Required by)	FSAR Section	Implementation Milestone	Implementation Requirement
				Applicant's detailed implementing procedures for its emergency plan submitted at least 180 days prior to scheduled date for initial loading of fuel	10 CFR Part 50, Appendix E, Section V
15.	Security Program:	10 CFR 50.34(c);			
	Physical Security Program	10 CFR 73.55; 10 CFR 73.56; 10 CFR 73.57;	13.6	Prior to receipt of fuel onsite	License Condition
	Safeguards Contingency Program	10 CFR 50.34(d) 10 CFR Part 73, Appendix C	13.6	Prior to receipt of fuel onsite	License Condition
	Training and Qualification Program	10 CFR Part 73, Appendix B	13.6	Prior to receipt of fuel onsite	License Condition
	Fitness for Duty Program (Construction - Mgt. & Oversight Personnel)	10 CFR Part 26 Subparts A–H, N, and O	13.7	Prior to initiating construction	License Condition

STD COL 13.4-1

Table 13.4-201 (Sheet 6 of 7)
Operational Programs Required by NRC Regulations

Item	Program Title	Program Source (Required by)	FSAR Section	Implementation	
				Milestone	Requirement
	Fitness for Duty Program (Construction - Workers & First Line Supv.)	10 CFR Part 26 Subpart K	13.7	Prior to initiating construction	License Condition
	Fitness for Duty Program (Operation)	10 CFR Part 26	13.7	Prior to initial fuel load	License Condition
16.	Quality Assurance Program – Operation	10 CFR 50.54(a); 10 CFR Part 50, Appendix A (GDC 1); 10 CFR Part 50, Appendix B	17.5	30 days prior to scheduled date for the initial loading of fuel	10 CFR 50.54(a)(1)
17.	Maintenance Rule	10 CFR 50.65	17.6	Prior to fuel load authorization per 10 CFR 52.103(g)	10 CFR 50.65(a)(1)
18.	Motor-Operated Valve Testing	10 CFR 50.55a(b)(3)(ii)	3.9.6.2.2	Prior to initial fuel load	License Condition

STD COL 13.4-1

Table 13.4-201 (Sheet 7 of 7)
Operational Programs Required by NRC Regulations

Item	Program Title	Program Source (Required by)	FSAR Section	Implementation	
				Milestone	Requirement
19.	Initial Test Program	10 CFR 50.34; 10 CFR 52.79(a)(28)	14.2	Prior to the first construction test being conducted for the Construction Test Program Prior to the first preoperational test for the Preoperational Test Program Prior to initial fuel load for the Startup Test Program	License Condition

a) Inservice Testing Program will be fully implemented by generator on line on nuclear heat. Appropriate portions of the program are implemented as necessary to support the system operability requirements of the technical specifications.

13.5 PLANT PROCEDURES

This section of the referenced DCD is incorporated by reference with the following departures and/or supplements.

VEGP DEP 1.1-1 DCD Subsection 13.5.1, Combined License Information, is renumbered in this FSAR section to 13.5.3.

STD COL 13.5-1 This section of the FSAR describes the administrative and other procedures which are not described in the DCD that the operating organization (plant staff) uses to conduct the routine operating, abnormal, and emergency activities in a safe manner.

The Quality Assurance Program Description (QAPD), as discussed in Section 17.5, describes procedural document control, record retention, adherence, assignment of responsibilities, and changes.

Procedures are identified in this section by topic, type, or classification in lieu of the specific title and represent general areas of procedural coverage.

Procedures are issued prior to fuel load to allow sufficient time for plant staff familiarization and to develop operator licensing examinations.

The format and content of procedures are controlled by the applicable AP1000 Writer's Guideline.

Each procedure is sufficiently detailed for an individual to perform the required function without direct supervision, but does not provide a complete description of the system or plant process. The level of detail contained in the procedure is commensurate with the qualifications of the individual normally performing the function.

Procedures are developed consistent with guidance described in DCD Section 18.9, "Procedure Development" and with input from the human factors engineering process and evaluations.

13.5.1 ADMINISTRATIVE PROCEDURES

This section describes administrative procedures that provide administrative control over activities that are important to safety for the operation of the facility.

Procedures outline the essential elements of the administrative programs and controls as described in ANSI/ANS 3.2-1988 (Reference 201) and in Section 17.5. These procedures are organized such that the program elements are prescribed

in documents normally referred to as administrative procedures. Regulatory and industry guidance for the appropriate format, content and typical activities delineated in written procedures is implemented as appropriate.

Administrative procedures contain adequate programmatic controls to provide effective interface between organizational elements. This includes contractor and owner organizations providing support to the station operating organization.

A Writer's Guideline promotes the standardization and application of human factors engineering principles to procedures. The Writer's Guideline establishes the process for developing procedures that are complete, accurate, consistent, and easy to understand and follow. The Writer's Guideline provides objective criteria so that procedures are consistent in organization, style, and content. The Writer's Guideline includes criteria for procedure content and format including the writing of action steps and the specification of acceptable acronym lists and acceptable terms to be used.

Procedure maintenance and control of procedure updates are performed in accordance with the QAPD, as discussed in Section 17.5.

The administrative programs and associated procedures developed in the pre-COL phase are described in Table 13.5-201 (for future designation as historical information).

The plant administrative procedures provide procedural instructions for the following:

- Procedures review and approval.
- Equipment control procedures - These procedures provide for control of equipment, as necessary, to maintain personnel and reactor safety, and to avoid unauthorized operation of equipment.
- Control of maintenance and modifications.
- Crane Operation Procedures - Crane operators who operate cranes over fuel pools are qualified and conduct themselves in accordance with ANSI B30.2 (Chapter 2-3), "Overhead and Gantry Cranes" (Reference 202).
- Temporary changes to procedures.
- Temporary procedure issuance and control.
- Special orders of a temporary or self-canceling nature.
- Standing orders to shift personnel including the authority and responsibility of the shift manager, licensed senior reactor operator in the control room, control room operator and shift technical advisor.

- Manipulation of controls and assignment of shift personnel to duty stations per the requirements of 10 CFR 50.54 (i), (j), (k), (l), and (m) including delineation of the space designated for the "At the Controls" area of the control room.
- Shift relief and turnover procedures.
- Fitness for Duty.
- Control Room access.
- Working hour limitations.
- Feedback of design, construction, and applicable important industry and operating experience.
- Shift Manager administrative duties.
- Verification of correct performance of operational activities.
- A vendor interface program that provides vendor information for safety related components is incorporated into plant documentation.

13.5.2 OPERATING AND MAINTENANCE PROCEDURES

13.5.2.1 Operating and Emergency Operating Procedures

This information is addressed in the DCD.

13.5.2.2 Maintenance and Other Operating Procedures

The QAPD, as described in Section 17.5, provides guidance for procedural adherence. Regulatory and industry guidance for the appropriate format, content, and typical activities delineated in written procedures is implemented as appropriate.

13.5.2.2.1 Plant Radiation Protection Procedures

The plant radiation protection program is contained in procedures. Procedures are developed and implemented for such things as: maintaining personnel exposures, plant contamination levels, and plant effluents ALARA; monitoring both external and internal exposures of workers, considering industry-accepted techniques; routine radiation surveys; environmental monitoring in the vicinity of the plant; radiation monitoring of maintenance and special work activities; evaluation of radiation protection implications of proposed modifications; establishing quality assurance requirements applicable to the radiation protection program; and maintaining radiation exposure records of workers and others.

13.5.2.2.2 Emergency Preparedness Procedures

A discussion of emergency preparedness procedures can be found in the ESPA Emergency Plan.

13.5.2.2.3 Instrument Calibration and Test Procedures

The QAPD, as discussed in Section 17.5, provides a description of procedural requirements for instrumentation calibration and testing.

13.5.2.2.4 Chemistry Procedures

Procedures provided for chemical and radiochemical control activities include the nature and frequency of sampling and analyses; instructions for maintaining fluid quality within prescribed limits; the use of control and diagnostic parameters; and limitations on concentrations of agents that could cause corrosive attack, foul heat transfer surfaces or become sources of radiation hazards due to activation.

Procedures are also provided for the control, treatment, and management of radioactive wastes and control of radioactive calibration sources.

13.5.2.2.5 Radioactive Waste Management Procedures

Procedures for the operation of the radwaste processing systems provide for the control, treatment, and management of on-site radioactive wastes. Procedural controls are in place for radiological releases.

13.5.2.2.6 Maintenance, Inspection, Surveillance, and Modification Procedures

13.5.2.2.6.1 Maintenance Procedures

Maintenance procedures describe maintenance planning and preparation activities. Maintenance procedures are developed considering the potential impact on the safety of the plant, license limits, availability of equipment required to be operable, and possible safety consequences of concurrent or sequential maintenance, testing or operating activities.

Maintenance procedures contain sufficient detail to permit the maintenance work to be performed correctly and safely. Procedures include provisions for conducting and recording results of required tests and inspections, if not performed and documented under separate test and inspection procedures. References are made to vendor manuals, plant procedures, drawings, and other sources as applicable.

Instructions are included, or referenced, for returning the equipment to its normal operating status. Testing is commensurate with the maintenance that has been

performed. Testing may be included in the maintenance procedure or be covered in a separate procedure.

The preventive maintenance program, including preventive and predictive procedures, as appropriate for structures, systems and components, prescribes the frequency and type of maintenance to be performed. An initial program based on service conditions, experience with comparable equipment and vendor recommendations is developed prior to fuel loading. The program is revised and updated as experience is gained with the equipment. To facilitate this, equipment history files are created and kept current. The files are organized to provide complete and easily retrievable equipment history.

13.5.2.2.6.2 Inspection Procedures

The QAPD, as discussed in Section 17.5, provides a description of procedural requirements for inspections.

13.5.2.2.6.3 Modification Procedures

Plant modifications and changes to setpoints are developed in accordance with approved procedures. These procedures control necessary activities associated with the modifications such that they are carried out in a planned, controlled, and orderly manner. For each modification, design documents such as drawings, equipment and material specifications, and appropriate design analyses are developed or the as-built design documents are utilized. Separate reviews are conducted by individuals knowledgeable in both technical and QA requirements to verify the adequacy of the design effort.

Proposed modification(s) which involve a license amendment or a change to Technical Specifications are processed as proposed license amendment request(s).

Plant procedures impacted by modifications are changed prior to declaring the system operable to reflect revised plant conditions; and cognizant personnel who are responsible for operating and maintaining the modified equipment are adequately trained.

13.5.2.2.7 Material Control Procedures

The QAPD, as discussed in Section 17.5, provides a description of procedural requirements for material control.

13.5.2.2.8 Security Procedures

A discussion of security procedures is provided in the Security Plan.

13.5.3 COMBINED LICENSE INFORMATION ITEM

STD COL 13.5-1 Information for this COL item is addressed in Section 13.5.

13.5.4 REFERENCES

201. ANSI/ANS 3.2-1988, “Administrative Control and Quality Assurance for the Operational Phase of Nuclear Power Plants.”

202. ANSI B30.2 (Chapter 2-3), “Overhead and Gantry Cranes.”

Table 13.5-201
Pre-COL Phase Administrative Programs and Procedures

STD COL 13.5-1 (This table is included for future designation as historical information.)

- Design/Construction Quality Assurance Program
- Reporting of Defects and Noncompliance, 10 CFR Part 21 Program
- Design Reliability Assurance Program

13.6 SECURITY

This section of the referenced DCD is incorporated by reference with the following departures and /or supplements.

This section of the referenced ESPA SSAR is incorporated by reference with the following variances and/or supplements.

Add the following text after ESPA SSAR Section 13.6.

STD COL 13.6-1 The Security Plan consists of the Physical Security Plan, the Training and Qualification Plan, and the Safeguards Contingency Plan. The Security Plan is submitted to the Nuclear Regulatory Commission as a separate licensing document in order to fulfill the requirements of 10 CFR 52.79(a)(35). The Security Plan meets the requirements contained in 10 CFR Part 26 and 10 CFR Part 73 and will be maintained in accordance with the requirements of 10 CFR 52.98. The Plan is categorized as Security Safeguards Information and is withheld from public disclosure pursuant to 10 CFR 73.21.

The Physical Security Plan during construction, including control of access to the new plant construction site, is consistent with NEI 03-12, Appendix F (Reference 201), which is currently under NRC review.

Table 13.4-201 provides milestones for security program implementation.

13.6.1 COMBINED LICENSE INFORMATION ITEM

STD COL 13.6-1 Information for this COL item is addressed in Section 13.6.

13.6.2 ESP COL ACTION ITEMS

VEGP ESP COL 13.6-1 The specific access control measures to address the existing rail spur are addressed in Part 8, Security Plan, Section 6.2.

13.6.3 REFERENCES

201. NEI 03-12, “Appendix F, Security Measures during New Reactor Construction,” Revision 2, September 2007.

VEGP DEP 1.1-1 DCD Section 13.7 is renumbered to 13.8 to allow for sequential numbering of the Fitness for Duty section in FSAR.

Add the following new section after DCD Section 13.6.

This section of the referenced ESPA SSAR is incorporated by reference with the following variances and/or supplements.

13.7 FITNESS FOR DUTY

STD SUP 13.7-1 The Fitness for Duty (FFD) Program (Program) is implemented and maintained in two phases; the construction phase program and the operating phase program. The construction phase program is consistent with NEI 06-06 (Reference 201), which is currently under NRC review. The construction phase program is implemented as identified in Table 13.4-201. The operations phase program will be consistent with the pending revision to 10 CFR Part 26, when issued. The operations phase program is implemented as identified in Table 13.4-201.

The FFD Program is based on the pending revision of Part 26 because on-site construction activities subject to Part 26 are not scheduled to occur until after the new regulations take effect. A request for an exemption from the current Part 26 regulations is discussed in Part 7 of the COLA.

13.7.1 REFERENCES

201. Nuclear Energy Institute “Fitness for Duty Program Guidance for New Nuclear Power Plant Construction Sites,” NEI 06-06, Revision 1, ADAMS Accession Number ML072670126, September 2007.

Add the following new appendix at the end of DCD Chapter 13.

VEGP COL 13.1-1 APPENDIX 13AA CONSTRUCTION-RELATED ORGANIZATION

The information in this appendix is included for future designation as historical information. Paragraphs are numbered to be subsequent to Subsection 13.1.1.1.

13AA.1.1.1.1 Design and Construction Activities

The Westinghouse Electric Company (WEC) was selected to design, fabricate, deliver, and install the AP1000 advanced light water pressurized water reactors (PWR) and to provide technical direction for installation and startup of this equipment. DCD Subsection 1.4.1 provides detailed information regarding WEC past experience in design, development, and manufacturing of nuclear power facilities. Operating experience from design, construction, and operation of earlier WEC PWRs is applied in the design, construction, and operation of the AP1000 as described in numerous locations throughout the DCD (e.g., DCD Subsections 3.6.4.4, 3.9.4.2.1, 4.2.3.1.3).

A construction architect engineer (AE) provides the construction of the plant and additional design engineering for selected site specific portions of the plant. The AE is selected based on experience and proven technical capability in nuclear construction projects or projects of similar scope and complexity.

Other design and construction activities are generally contracted to qualified suppliers of such services. Implementation or delegation of design and construction responsibilities is described in the subsections below. Quality assurance aspects of these activities are described in Chapter 17.

13AA.1.1.1.1.1 Principal Site-Related Engineering Work

The principal site engineering activities accomplished towards the construction and operation of the plant are:

a. Meteorology

Information concerning local (site) meteorological parameters is developed and applied by station and contract personnel to assess the impact of the station on local meteorological conditions. An onsite meteorological measurements program is employed by station personnel to produce data for the purpose of making atmospheric dispersion estimates for postulated accidental and expected routine airborne releases of effluents. A maintenance program is established for surveillance, calibration, and repair of instruments. More information regarding the study and meteorological program is found in Section 2.3.

b. Geology

Information relating to site and regional geotechnical conditions is developed and evaluated by utility and contract personnel to determine if geologic conditions could present a challenge to the safety of the plant. Items of interest include geologic structure, seismicity, geological history, and ground water conditions. During construction, foundations within the power block area are mapped or visually inspected and photographed. Section 2.5 provides details of these investigations.

c. Seismology

Information relating to seismological conditions is developed and evaluated by utility and contract personnel to determine if the site location and area surrounding the site is appropriate from a safety standpoint for the construction and operation of a nuclear power plant. Information regarding tectonics, seismicity, correlation of seismicity with tectonic structure, characterization of seismic sources, and ground motion are assessed to estimate the potential for strong earthquake ground motions or surface deformation at the site. Section 2.5 provides details of these investigations.

d. Hydrology

Information relating to hydrological conditions at the plant site and the surrounding area is developed and evaluated by utility and contract personnel. The study includes hydrologic characteristics of streams, lakes, shore regions, the regional and local groundwater environments, and existing or proposed water control structures that could influence flood control and plant safety. Section 2.4 includes more detailed information regarding this subject.

e. Demography

Information relating to local and surrounding area population distribution is developed and evaluated by utility and contract personnel. The data is used to determine if requirements are met for establishment of exclusion area, low population zone, and population center distance. Section 2.1 includes more detailed information regarding population around the plant site.

f. Environmental Effects

Monitoring programs are developed to enable the collection of data necessary to determine possible impact on the environment due to construction, startup, and operational activities and to establish a baseline from which to evaluate future environmental monitoring.

13AA.1.1.1.1.2 Design of Plant and Ancillary Systems

Responsibility for design and construction of systems outside the power block such as circulating water, service water, switchyard, and secondary fire protection systems are delegated to qualified contractors.

13AA.1.1.1.1.3 Review and Approval of Plant Design Features

Design engineering review and approval is performed in accordance with the reactor technology vendor QA program and Section 17.1. The reactor technology vendor is responsible for design control of the power block. Verification is performed by competent individuals or groups other than those who performed the original design. Design issues arising during construction are addressed and implemented with notification and communication of changes to the manager in charge of engineering and site support for review. As systems are tested and approved for turnover and operation, control of design is turned over to plant staff. The manager in charge of engineering and site support, along with functional managers and staff, assumes responsibility for review and approval of modifications, additions, or deletions in plant design features, as well as control of design documentation, in accordance with the Operational QA Program. Design control becomes the responsibility of the manager in charge of engineering and site support prior to loading fuel. During construction, startup, and operation, changes to human-system interfaces of control room design are approved using a human factors engineering evaluation addressed within Chapter 18. See Organization Charts, Figures 13.1-201 and 13AA-201 for reporting relationships.

13AA.1.1.1.1.4 Site Layout with Respect to Environmental Effects and Security Provisions

Site layout was considered when determining the expected environmental effects from construction.

The Physical Security Plan is designed with provisions that meet the applicable NRC regulations. Site layout was considered when developing the Security Plan.

13AA.1.1.1.1.5 Development of Safety Analysis Reports

Information regarding the development of the Final Safety Analysis Report is found in Chapter 1.

13AA.1.1.1.1.6 Review and Approval of Material and Component Specifications

Safety-related material and component specifications of structures, systems, and components designed by the reactor technology vendor are reviewed and approved in accordance with the reactor technology vendor quality assurance program and Section 17.1. Review and approval of items not designed by the

reactor vendor are controlled for review and approval by Section 17.5 and the Quality Assurance Program Description.

13AA.1.1.1.1.7 Procurement of Materials and Equipment

Procurement of materials during the construction phase is the responsibility of the reactor technology vendor and constructor. The process is controlled by the construction QA programs of these organizations. Oversight of the inspection and receipt of materials process is the responsibility of the manager in charge of quality assurance.

13AA.1.1.1.1.8 Management and Review of Construction Activities

Overall management and responsibility for construction activities is assigned to the site executive in charge of plant management. The project director of the engineering, procurement, and construction (EPC) contractor is accountable to the site executive in charge of plant management for construction activities. See Organization Chart Figure 13AA-201. Monitoring and review of construction activities by utility personnel is a continuous process at the plant site. Contractor performance is monitored to provide objective data to utility management in order to identify problems early and develop solutions. Monitoring of construction activities verifies that contractors are in compliance with contractual obligations for quality, schedule, and cost. Monitoring and review of construction activities is divided functionally across the various disciplines of the utility construction staff, e.g. electrical, mechanical, instrument and control, etc., and tracked by schedule based on system and major plant components/areas.

After each system is turned over to plant staff the construction organization relinquishes responsibility for that system. At that time they will be responsible for completion of construction activities as directed by plant staff and available to provide support for preoperational and start-up testing as necessary.

13AA.1.1.1.2 Preoperational Activities

The plant manager reports to the site executive in charge of plant management. The plant manager, with the aid of those managers that report directly to the plant manager, (see Figure 13AA-201) is responsible for the activities required to transition the unit from the construction phase to the operational phase. These activities include turnover of systems from construction, preoperational testing, schedule management, procedure development for tests, fuel load, integrated startup testing, and turnover of systems to plant staff.

13AA.1.1.1.2.1 Development of Human Factors Engineering Design Objectives and Design Phase Review of Proposed Control Room Layouts

Human factors engineering (HFE) design objectives are initially developed by the reactor technology vendor in accordance with Chapter 18 of the FSAR and the Design Control Document (DCD). As a collaborative team, personnel from the reactor technology vendor design staff and personnel, including licensed operators, engineers, and instrumentation and control technicians from owner and other organizations in the nuclear industry, assess the design of the control room and man-machine interfaces to attain safe and efficient operation of the plant. See Section 18.2 for additional details of HFE program management.

Modifications to the certified design of the control room or man-machine interface described in the Design Control Document are reviewed per engineering and site support procedures, as required by Section 18.2, to evaluate the impact to plant safety. The manager in charge of engineering is responsible for the human factors engineering (HFE) design process and for the design commitment to HFE during construction and throughout the life of the plant as noted in Subsection 13.1.1.2.1. The HFE program is established in accordance with the description and commitments in Chapter 18.

13AA.1.1.1.2.2 Preoperational and StartupTesting

Preoperational and startup testing is conducted by the plant test and operations (PT&O) organization. The PT&O organization, functions, and responsibilities are addressed in Section 14.2. Sufficient numbers of personnel are assigned to perform preoperational and startup testing to facilitate safe and efficient implementation of the testing program. Plant-specific training provides instruction on the administrative controls of the test program. To improve operational experience, operations and technical staff are used as support in conducting the test program and in reviewing test results.

See Figure 13AA-201 for organization chart for preoperational and startup testing.

13AA.1.1.1.2.3 Development and Implementation of Staff Recruiting and Training Programs

Staffing plans are developed based on operating plant experience with input from the reactor technology vendor for safe operation of the plant as determined by HFE. See Section 18.6. These plans are developed under the direction and guidance of the site executive in charge of plant management, executive in charge of engineering and technical services, and executive in charge of operations support. Staffing plans are completed and manager level positions are filled prior to start of preoperational testing. Personnel selected to be licensed reactor operators and senior reactor operators along with other staff necessary to support the safe operation of the plant are hired with sufficient time available to complete appropriate training programs, and become qualified, and licensed, if

required, prior to fuel being loaded in the reactor vessel. See Figure 13AA-202 for an estimated timeline of hiring requirements for operator and technical staff relative to fuel load.

Because of the dynamic nature of the staffing plans and changes that occur over time, it is expected that specific numbers of personnel on site will change; however, Table 13.1-201 includes the initial estimated number of staff for selected positions and the estimated number of additional positions required for a second unit. Recruiting of personnel to fill positions is the shared responsibility of the manager in charge of human resources and the various heads of departments. The training program is described in Section 13.2.

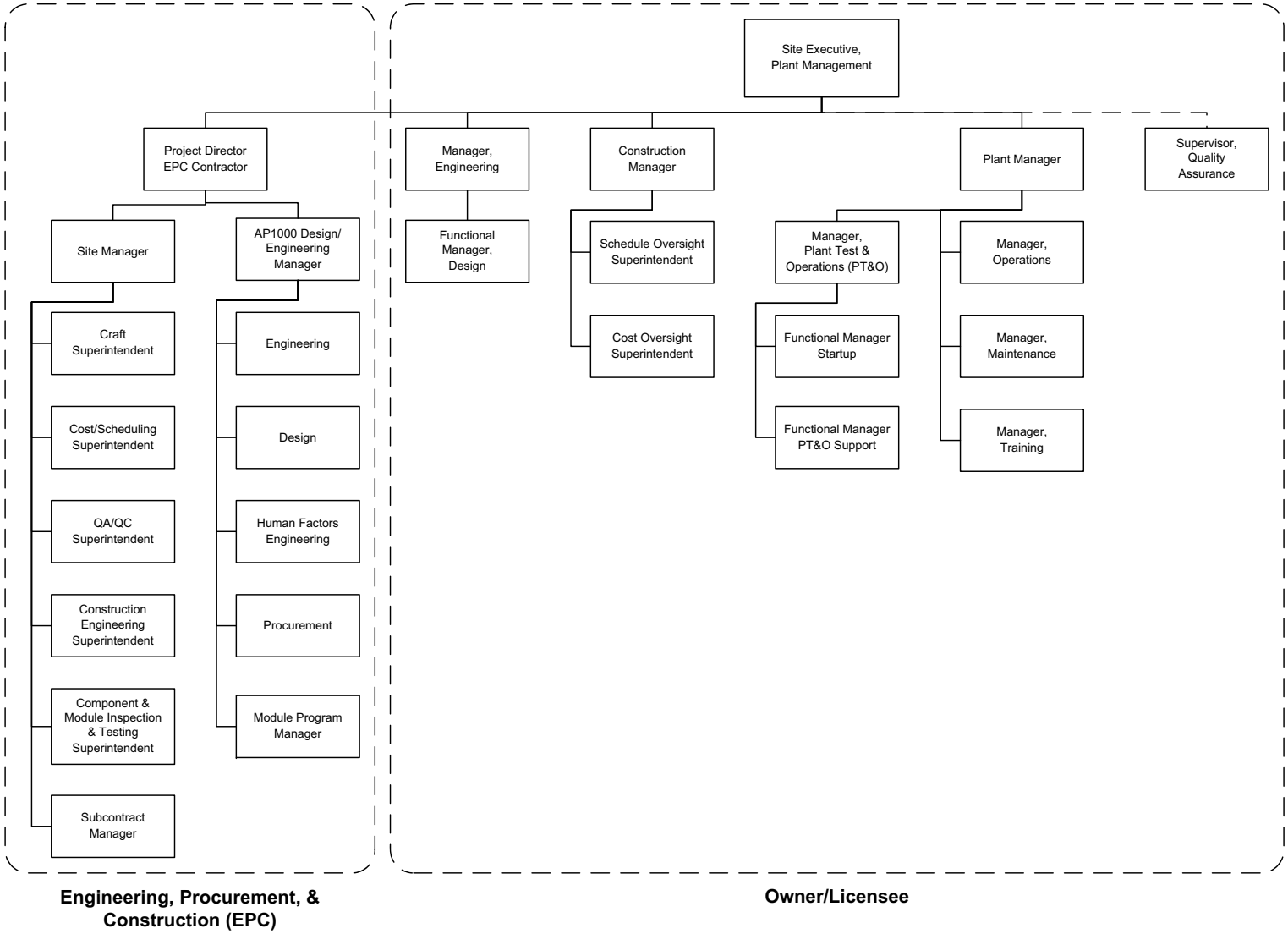

VEGP COL 13.1-1

Figure 13AA-201
Construction Management Organization

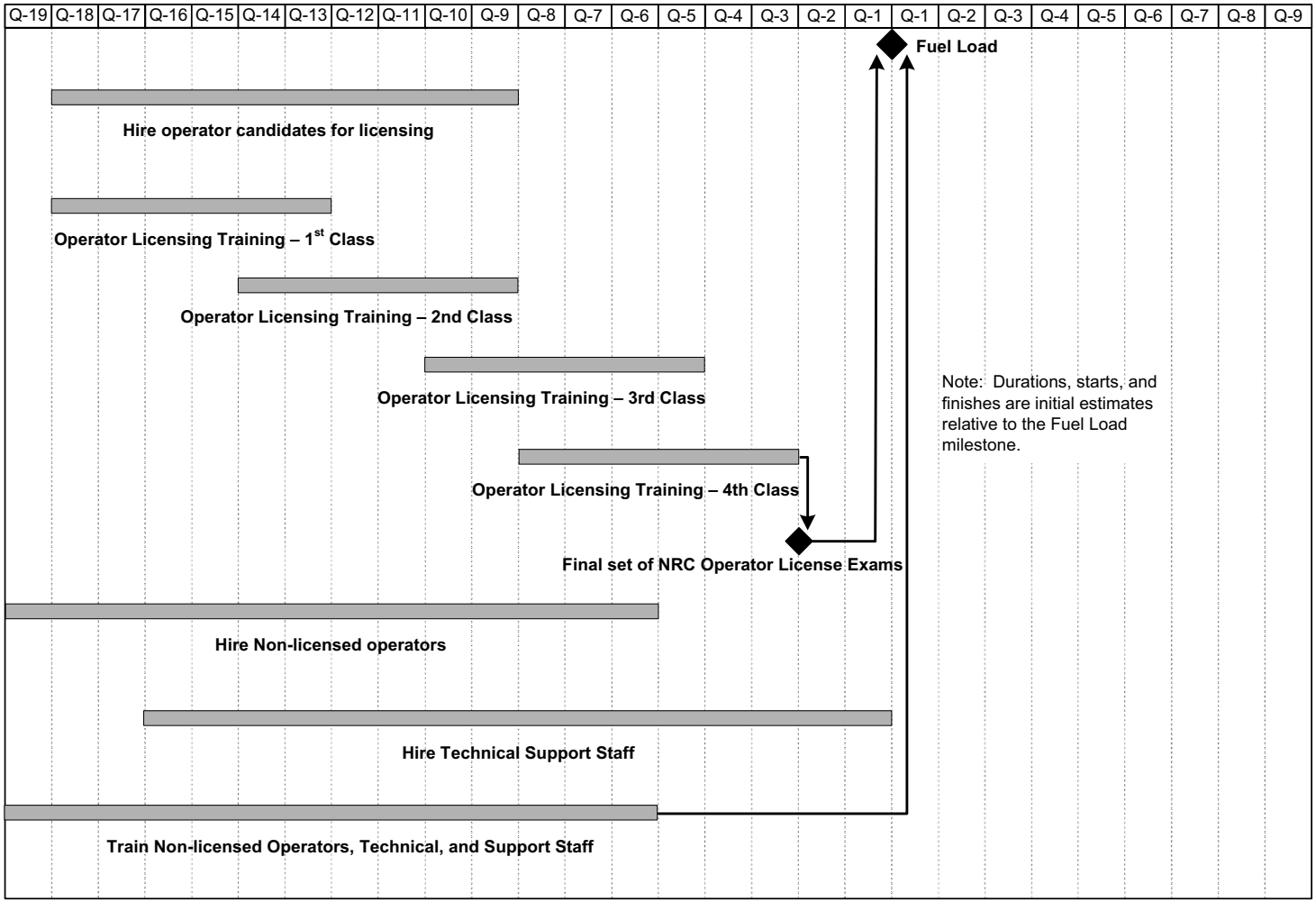

VEGP COL 13.1-1

Figure 13AA-202
Hiring Schedule for Plant Staff

The following new appendix is inserted as supplemental information to NEI 06-13A which is incorporated by reference in Section 13.2.

STD COL 13.2-1 APPENDIX 13BB STANDARD SUPPLEMENT TO GENERIC TEMPLATE NEI 06-13A

Insert the following paragraphs into the text of NEI 06-13A after the paragraph numbered 1.1.2.

13BB.2.1.3 Licensed Operator Training Program Prior to Commercial Operation

Prior to initial commercial operation, licensed operator training will be conducted in the construction phase to support preoperational testing and cold and hot functional activities. Licensed operator training conducted prior to commercial operation is referred to as “cold” license operator training. Cold license operator training will be conducted as described below.

Cold licensing of operators at a new plant provides the method for operations personnel to acquire the knowledge and experience required for licensed operator duties during the unique conditions of new plant construction.

Prior to commercial operation, plant experience requirements specified in Regulatory Guide 1.8 (Revision 3) and ANS/ANSI 3.1-1993 can not be met. Therefore, during cold license operator training, the Regulatory Position C.1.b of Regulatory Guide 1.8 (Revision 2) applies: cold license operator candidates will meet the training elements defined in ANS/ANSI 3.1 but are exempt from the experience requirements defined in ANS/ANSI 3.1. Alternate methods of gaining plant experience, in addition to those referenced in Regulatory Guide 1.8 and associated ANS/ANSI standards, are described in Subsection 13BB.2.1.3.2.

Approximately 18 months prior to expected fuel load, the NRC examination will be administered for cold license operator candidates and will include a written examination, simulator examination, and in-plant job performance measures (JPMs). Sufficient operator licenses will be obtained to support operational shifts prior to first fuel load.

The cold license operator training process will terminate when the last licensed operator training class initiated during the plant construction/preoperational test phase has taken a scheduled NRC license examination or the plant becomes operational, whichever is later.

13BB.2.1.3.1 Licensed Operator Continuing Training Prior to Commercial Operation

The SAT process will be utilized to determine continuing training needs for cold license operator candidates following completion of the initial phases of their training. Structured continuing training will be provided to maintain the license candidates' knowledge and ability and will include topics related to plant modifications, construction, functional testing, and OE related to construction activities.

An accredited licensed operator requalification training program will be implemented within 90 days following the issuance of the first NRC operator licenses. This will facilitate maintaining the licensed operators' knowledge and ability and meet the milestone guidance related to the Reactor Operator Requalification Training Program provided in Section C.I.13.4 of Regulatory Guide 1.206.

13BB.2.1.3.2 Licensed Operator Experience Requirements Prior to Commercial Operation

Each cold license operator candidate's operational experience is assessed prior to selection for a licensed training program; however, experience requirements are not required to be fully met prior to enrolling in an operator training program. In addition, total experience requirements and one year on-site experience requirements not fully met at the time of the licensed operator application submittal shall be met prior to issuing the individual's NRC operator license. Following satisfactory completion of an NRC license examination, the licensee will notify the NRC when the candidate's experience requirements have been met.

Experience may be gained anytime prior to fuel load by participating in construction and testing activities. Operational experience on a one-for-one basis may be achieved during the construction and testing phases while performing one or more of the following tasks:

- Plant operating procedure development and verification
- Human engineering and task analysis verification
- Preoperational testing of plant systems
- Participating in the cold and hot functional testing program
- Acting as an operations classroom, simulator, or on-the-job training (OJT) instructor

The above practical work assignments provide experience and may fulfill the one year on-site experience requirement cited in Regulatory Guide 1.8 and the three month on-shift requirement cited in ANS/ANSI 3.1. On-site experience may also

be gained on a one-for-one basis at a nuclear reactor site of similar design (e.g., PWR or BWR).

An RO candidate who completes a site-specific non-licensed operator training program for critical non-licensed operator tasks, and completes a site familiarization course designed on a systematic evaluation of site design features and operator site familiarization needs, satisfies the requirement of one year on-site experience and the requirement of six months as a non-licensed operator at the facility for which the license is sought, both of which are cited in Regulatory Guide 1.8.

A non-degreed SRO candidate who completes a combined RO and SRO course and completes a site familiarization course designed on a systematic evaluation of site design features and operator site familiarization needs satisfies the one year experience requirement as a licensed RO cited in Regulatory Guide 1.8.

For a degreed SRO, performing construction and testing activities described above on a one-for-one basis satisfies the six month on-site experience requirement as a staff engineer cited in Regulatory Guide 1.8.

An SRO candidate (degreed or non-degreed) who completes a plant referenced simulator course or an observation course at an operating reactor of similar design meets the special experience requirements related to at power and startup operations described in ANS/ANSI 3.1. These courses are based on a systematic analysis of the supervisory skill, knowledge, and ability required of a SRO. A systematic process to identify the objectives associated with experience gained at an operating facility coupled with high fidelity simulation provides assurance that the requisite knowledge, skill, and ability level has been achieved.

13BB.2.1.3.3 On-the-Job Training (OJT) Prior to Commercial Operation

Until equipment installation is sufficiently complete, viable alternatives for performance of in-plant JPMs will be identified including, but not limited to, discussions, mockups, virtual presentations and part-task simulation. Time spent in OJT training may be counted as on-site and total nuclear power plant experience.

Until the plant becomes operational, viable alternatives for the main control room OJT (three months on-shift as an extra person) will be identified including, but not limited to, preoperational testing activities, simulator time focused on crew operations, or dedicated observation time in the main control room of an operating nuclear power plant.

13BB.2.1.3.4 Plant-Referenced Simulation Facilities Prior to Commercial Operation

The initial phase of licensed operator simulator training will be performed with a simulation facility modeled in accordance with the guidance of Regulatory Guide

1.149 and its associated ANSI/ANS standards as describe below. The simulation facility will be a high fidelity/quality training device and will be maintained in accordance with the criteria of ANSI-3.5 1998, Appendix D.

Simulation models are updated as information concerning plant design and performance is obtained. These updates will ensure the simulator is current with plant design and can be used as a reliable training tool.

The following provides a generic simulator training sequence indicating the use of part task/limited scope simulator and plant referenced simulator for licensed operator training. The actual sequence may vary depending on plant construction scheduling.

- Phase 1 (approximately 40 months prior to fuel load) – The part task/ limited scope simulator is used to provide licensed operator training based on standardized design simulator modeling and operating procedures.

- Phase 2 (approximately 24 months prior to fuel load) – An ANSI/ANS 3.5 1998 plant referenced simulator is used in final phase of licensed operator initial training to perform reactivity manipulations and complete required NRC license candidate training.

- Phase 3 (approximately 18 months prior to fuel load) – An ANSI/ANS 3.5 1998 plant referenced simulator is used for performance of NRC operator initial license examinations.

Prior to conducting the simulator portion of licensed operator examination, the plant-referenced simulator response will be tested and validated against plant design data to ensure the simulator meets the operational and testing criteria of 10 CFR 55.46 paragraph (c).

CHAPTER 14

INITIAL TEST PROGRAM

TABLE OF CONTENTS

Section	Title	Page
14.1	SPECIFIC INFORMATION TO BE INCLUDED IN PRELIMINARY/FINAL SAFETY ANALYSIS REPORTS	14.1-1
14.2	SPECIFIC INFORMATION TO BE INCLUDED IN STANDARD SAFETY ANALYSIS REPORTS	14.2-1
14.2.2	ORGANIZATION, STAFFING, AND RESPONSIBILITIES	14.2-1
14.2.2.1	PT&O Organization	14.2-1
14.2.2.1.1	Manager In Charge of PT&O	14.2-1
14.2.2.1.2	Functional Manager In Charge of PT&O Support	14.2-2
14.2.2.1.3	PT&O Engineers	14.2-2
14.2.2.1.4	Functional Manager In Charge of Startup	14.2-2
14.2.2.1.5	Startup Engineers	14.2-3
14.2.2.2	PT&O Organization Personnel Qualifications and Training	14.2-3
14.2.3.2	Review of Test Results	14.2-3
14.2.9.4.15	Seismic Monitoring System Testing	14.2-4
14.2.9.4.22	Storm Drains	14.2-4
14.2.9.4.23	Off-site AC Power Systems	14.2-5
14.2.9.4.24	Raw Water System	14.2-6
14.2.9.4.25	Sanitary Drainage System	14.2-6
14.2.9.4.26	Fire Brigade Support Equipment	14.2-7
14.2.9.4.27	Portable Personnel Monitors and Radiation Survey Instruments	14.2-8
14.2.10.4.29	Cooling Tower(s)	14.2-8
14.2.11	REFERENCES	14.2-9
14.3	CERTIFIED DESIGN MATERIAL	14.3-1
14.3.2.3	Site-Specific ITAAC (SS-ITAAC)	14.3-1
14.3.2.3.1	Emergency Planning ITAAC (EP-ITAAC)	14.3-2
14.3.2.3.2	Physical Security ITAAC (PS-ITAAC)	14.3-3
14.3.2.3.3	Other Site-Specific Systems	14.3-3
14.3.3	CDM SECTION 3.0, NON-SYSTEM BASED DESIGN DESCRIPTIONS AND ITAAC	14.3-3
14.3.3.1	Non-System Based Site Specific ITAAC	14.3-3
14.4	COMBINED LICENSE APPLICANT RESPONSIBILITIES	14.4-1
14.4.1	ORGANIZATION AND STAFFING	14.4-1
14.4.2	TEST SPECIFICATIONS AND PROCEDURES	14.4-1

TABLE OF CONTENTS (Continued)

Section	Title	Page
14.4.4	REVIEW AND EVALUATION OF TEST RESULTS	14.4-1
14.4.5	INTERFACE REQUIREMENTS	14.4-1
14.4.6	FIRST-PLANT-ONLY AND THREE-PLANT-ONLY TESTS	14.4-2

LIST OF TABLES

Number	Title
14.3-201	ITAAC Screening Summary

CHAPTER 14

INITIAL TEST PROGRAM

14.1 SPECIFIC INFORMATION TO BE INCLUDED IN PRELIMINARY/FINAL SAFETY ANALYSIS REPORTS

This section of the referenced DCD is incorporated by reference with no departures or supplements.

14.2 SPECIFIC INFORMATION TO BE INCLUDED IN STANDARD SAFETY ANALYSIS REPORTS

This section of the referenced DCD is incorporated by reference with the following departures and/or supplements.

14.2.2 ORGANIZATION, STAFFING, AND RESPONSIBILITIES

Replace the existing information in DCD Subsection 14.2.2 with the following new paragraph and subsections.

STD COL 14.4-1 The AP1000 plant test and operations (PT&O) organization is described in Subsection 14.2.2.1. The organization for operating and maintaining the AP1000 plant is described in Section 13.1.

Table 13.4-201 provides milestones for initial test program implementation.

14.2.2.1 PT&O Organization

The Initial Test Program (ITP) is the responsibility of the PT&O Organization. The ITP includes three phases of testing:

- Construction and Installation Testing
- Preoperational Testing
- Startup Testing

14.2.2.1.1 Manager In Charge of PT&O

The manager in charge of PT&O reports directly to the plant manager. The manager in charge of PT&O manages the ITP.

The manager in charge of PT&O is responsible for:

- Staffing the PT&O Organization.
- Developing, reviewing, and approving the administrative and technical procedures associated with the preoperational and startup phases.
- Managing the ITP and personnel.
- Implementing the ITP schedule.
- Managing contracts associated with the ITP.

14.2.2.1.2 Functional Manager In Charge of PT&O Support

The functional manager in charge of PT&O support reports directly to the manager in charge of PT&O. The functional manager in charge of PT&O support plans and schedules procedure development to support startup. The functional manager in charge of PT&O support verifies that the test documents conform to the approved project procedures.

The functional manager in charge of PT&O support reviews and approves test procedures. These procedures are used to demonstrate that a system and its components meet the design and performance criteria.

14.2.2.1.3 PT&O Engineers

The PT&O engineers report directly to the functional manager in charge of PT&O support. The PT&O engineers are responsible for developing system test procedures.

14.2.2.1.4 Functional Manager In Charge of Startup

The functional manager in charge of startup reports directly to the manager in charge of PT&O. The functional manager in charge of startup manages the preoperational and startup testing. The functional manager in charge of startup is responsible for:

- Participating in the Joint Test Working Group (JTWG) and ensuring that the JTWG reviews and approves administrative and test procedures. The JTWG structure and responsibilities are defined in the “AP1000 Startup Site Administrative Manual - Program Management Description” (found in Reference 201).
- Preparing a detailed preoperational and startup testing schedule.
- Coordinating construction turnover to the PT&O organization.
- Informing the functional manager in charge of PT&O when vendor support essential to preoperational and startup testing is required, and coordinating vendor participation.
- Supervising and directing the startup engineers.
- Involving operations personnel in testing activities. Utilizing operations personnel, to the extent practical, as test witnesses or test performers to provide the operations personnel with experience and knowledge.
- Developing and implementing administrative controls to address system and equipment configuration control.

- Maintaining the startup schedule.
- Maintaining a daily startup log and issuing periodic progress reports that identify overall progress and potential challenges.

14.2.2.1.5 Startup Engineers

The startup engineers report directly to the functional manager in charge of startup.

The startup engineers are responsible for:

- Complying with administrative controls.
- Identifying any special or temporary equipment or services needed to support testing.
- Coordinating testing with involved groups.
- Reviewing and evaluating test results.

14.2.2.2 PT&O Organization Personnel Qualifications and Training

Personnel in the PT&O organization are qualified and trained in accordance with the “AP1000 Startup Site Administrative Manual - Program Management Description” (found in Reference 201).

14.2.3.2 Review of Test Results

Add the following text at the end of DCD Subsection 14.2.3.2:

STD COL 14.4-4 Upon completion of a test, the startup engineer is responsible for:

- Reviewing the test data.
- Evaluating the test results.
- Verifying that the acceptance criteria are met.
- Verifying that the test results that do not meet acceptance criteria are entered into the corrective action program.

Test results are reviewed and approved by the JTWG. Review and approval of test results are kept current such that succeeding tests are not dependent on systems

or components that have not been adequately tested. Test exceptions which do not meet acceptance criteria are identified to the affected and responsible design organizations and entered into the corrective action program. Implementation of corrective actions and retests are performed as required.

Prior to initial fuel load, the results of the preoperational test phase are comprehensively reviewed by the PT&O organization and the JTWG to verify the results indicate that the required plant structures, systems, and components are capable of supporting the initial fuel load and subsequent startup testing. The plant manager approves fuel loading.

Each area of startup testing is reviewed and evaluated by the PT&O organization and the JTWG. The test results at each power ascension testing power plateau are reviewed and evaluated by the PT&O organization and the JTWG and approved by the plant manager before proceeding to the next plateau. Startup test reports are prepared in accordance with Regulatory Guide 1.16, “Reporting of Operating Information -- Appendix A Technical Specifications.”

14.2.9.4.15 Seismic Monitoring System Testing

Add the following text at the beginning of DCD Subsection 14.2.9.4.15:

STD COL 14.4-5 The seismic monitoring system testing described in this section of the DCD also applies to site-specific seismic sensors.

Add the following subsections after DCD Subsection 14.2.9.4.21:

14.2.9.4.22 Storm Drains

STD COL 14.4-5 **Purpose**

Storm drain system testing verifies that the drains prevent plant flooding by diverting storm water away from the plant, as described in Section 2.4.

Prerequisites

Construction of the storm drain system is completed, and the system is operational.

General Test Methods and Acceptance Criteria

The storm drain system is visually inspected to verify the flow path is unobstructed. The system is observed under simulated or actual precipitation events to verify that the runoff from roof drains and the plant site and adjacent areas does not result in unacceptable soil erosion adjacent to, or flooding of, Seismic Category I structures.

14.2.9.4.23 Off-site AC Power Systems

Purpose

Off-site alternating current (ac) power system testing demonstrates the energization and proper operation of the as-installed switchyard components, as described in Section 8.2.

Prerequisites

Construction testing of plant off-site ac power systems, supporting systems, and components is completed. The components are operational and the switchyard equipment is ready to be energized. The required test instrumentation is properly calibrated and operational. The off-site grid connection is complete and available.

General Test Methods and Acceptance Criteria

The plant off-site ac power system components undergo a series of individual component and integrated system tests to verify that the off-site ac power system performs in accordance with the associated component design specifications. The individual component and integrated tests include:

a. Availability of ac and direct current (dc) power to the switchyard equipment is verified.

b. Operation of high voltage (HV) circuit breakers is verified.

c. Operation of HV disconnect switches and ground switches is verified.

d. Operation of substation transformers is verified.

e. Operation of current transformers, voltage transformers, and protective relays is verified.

f. Operation of switchyard equipment controls, metering, interlocks, and alarms that affect plant off-site ac power system performance is verified.

g. Design limits of switchyard voltages and stability are verified.

h. Under simulated fault conditions, proper function of alarms and protective relaying circuits is verified.

The test results confirm that the off-site ac power systems meet the technical and operational requirements described in Section 8.2.

14.2.9.4.24 Raw Water System

Purpose

Raw water system testing verifies that the as-installed components supply raw water to the circulating water cooling tower basin, service water system cooling tower basin, fire protection water storage tanks, and other systems, as described in Subsection 9.2.11.

Prerequisites

Construction testing of the raw water system is completed. The components are operational and the storage tanks and cooling tower basins are able to accept water. Required support systems, electrical power supplies, and control circuits are operational.

General Test Methods and Acceptance Criteria

The raw water system component and integrated system performance is observed to verify that the system functions, as described in Subsection 9.2.11 and in appropriate design specifications. The individual component and integrated system tests include:

a. Operation of the system pumps, traveling screens, automatic strainers, and valves is verified.

b. Operation of the system instrumentation, controls, actuation signals, alarms, and interlocks is verified.

c. Operation of heat tracing on system piping is verified.

14.2.9.4.25 Sanitary Drainage System

Purpose

Sanitary drainage system testing verifies that the as-installed components properly collect and discharge sanitary waste, as described in DCD Subsection 9.2.6.

Prerequisites

Construction testing of the sanitary drainage system is completed. Required support systems, electrical power supplies, and control circuits are operational.

General Test Methods and Acceptance Criteria

The sanitary drainage system component and integrated system performance is observed to verify that the system functions, as described in Subsection 9.2.6.2.1 and in appropriate design specifications. The individual component and integrated system tests include:

a. Operation of lift stations and valves is verified.

b. Operation of the system instrumentation, controls, actuation signals, and interlocks is verified.

14.2.9.4.26 Fire Brigade Support Equipment

Purpose

Fire brigade support equipment testing verifies that the equipment operates and is available when needed to perform the fire brigade functions, as described in Section 9.5.

Prerequisites

Equipment is ready and available for testing.

General Test Methods and Acceptance Criteria

The fire brigade support equipment undergoes a series of inspections to verify availability and operability. Equipment is available for selection and use, based on the hazard. Fire brigade support equipment tests include:

a. Location of portable extinguishers is verified; portable extinguishers are verified fully charged.

b. Operation of portable ventilation equipment is verified.

c. Operation of communication equipment is verified.

d. Operation of portable lighting is verified.

e. Operation of self-contained breathing apparatus and face masks is verified.

f. Operation of keys to open locked fire area doors is verified.

g. Turnout gear functionality and availability is verified.

14.2.9.4.27 Portable Personnel Monitors and Radiation Survey Instruments

Purpose

Portable personnel monitors and radiation survey instruments testing verifies that the devices operate in accordance with their intended function in support of the radiation protection program, as described in Chapter 12.

Prerequisites

Portable personnel monitors, radiation survey instruments, and appropriate certified test sources are on site.

General Test Method and Acceptance Criteria

The portable personnel monitors and radiation survey instruments are source checked and tested in accordance with the manufacturers' recommendations.

Add the following subsection after DCD Subsection 14.2.10.4.28:

14.2.10.4.29 Cooling Tower(s)

STD COL 14.4-5 **Objectives**

- Verify proper cooling tower(s) function. Provide thermal acceptance testing of the cooling tower's heat removal capabilities.

Prerequisites

- The cooling tower(s) is structurally complete and in good operating condition.
- Circulating water system testing is complete.
- Required support systems, electrical power supplies, and control circuits are operational.

Test Method

Thermal performance of the cooling towers is tested and verified using established industry test standards.

Performance Criteria

The cooling tower(s) perform as described in Subsection 10.4.5 and in appropriate design specifications.

Add the following subsection after DCD Subsection 14.2.10:

14.2.11 REFERENCES

201. Westinghouse Electric Company (WEC), “AP1000 Conduct of Test Program,” Document Number APP-GW-GLR-038, Revision 1, May 2007.

14.3 CERTIFIED DESIGN MATERIAL

This section of the referenced DCD is incorporated by reference with the following departures and/or supplements.

Add the following subsections after DCD Subsection 14.3.2.2.

14.3.2.3 Site-Specific ITAAC (SS-ITAAC)

STD SUP 14.3-1 A table of inspections, tests, analyses, and acceptance criteria (ITAAC) entries is provided for each site-specific system described in this FSAR that meets the selection criteria, and that is not included in the certified design. The intent of these ITAAC is to define activities that are undertaken to verify the as-built system conforms with the design features and characteristics defined in the system design description. ITAAC are provided in tables with the following three-column format:

Design Commitment	Inspection, Tests, Analysis	Acceptance Criteria

Each design commitment in the left-hand column of the ITAAC tables has associated inspections, tests, or analyses (ITA) requirements specified in the middle column. The acceptance criteria for the ITA are defined in the right-hand column.

SS-ITAAC do not address ancillary buildings and structures on the site, such as administrative buildings, parking lots, warehouses, training facilities, etc.

Selection Criteria

- In determining those structures, systems, or components for which ITAAC must be prepared, the following questions are considered for each structure, system, or component:
  - Are any features or functions classified as Class A, B, or C?
  - Are any defense-in-depth features or functions provided?
  - For nonsafety-related systems, are any features or functions credited for mitigation of design basis events?
  - For nonsafety-related systems, are there any features or functions that have been identified in DCD Section 16.3 as candidates for additional regulatory oversight?

If the answer to any of the above questions is yes, then ITAAC are prepared.

STD SUP 14.3-1

- The scope and content of the ITAAC correspond to the scope and content of the site-specific system design description.
- One inspection, test, or analysis may verify one or more provisions in the system design description. An ITAAC that specifies a system functional test or an inspection may verify a number of provisions in the system design description. There is not necessarily a one-to-one correspondence between the ITAAC and the system design descriptions.
- As required by 10 CFR 52.103, the inspections, tests, and analyses are completed (and the acceptance criteria satisfied) prior to initial fuel loading.
- The ITAAC verify the as-built configuration and performance characteristics of structures, systems, and components as identified in the system design descriptions.

Selection Methodology – Using the selection criteria, ITAAC table entries are developed for each selected system. This is achieved by evaluating the design features and performance characteristics defined in the system design descriptions and preparing an ITAAC table entry for each design description criterion that satisfies the selection criteria. A close correlation exists between the left-hand column of the ITAAC and the corresponding design description entries.

The ITAAC table is completed by selecting the method to be used for verification (either a test, an inspection, or an analysis) and the acceptance criteria for the as-built feature.

The approach used to perform the tests, inspections, or analyses is similar to that described in DCD Subsection 14.3.2.2.

14.3.2.3.1 Emergency Planning ITAAC (EP-ITAAC)

VEGP SUP 14.3-1

EP-ITAAC were developed in the Early Site Permit (ESP) Application to address implementation of elements of the Emergency Plan. Site-specific EP-ITAAC are based on the generic ITAAC provided in Table 13.3-1 of SECY-05-0197. These ITAAC have been tailored to the specific reactor design and emergency planning program requirements.

14.3.2.3.2 Physical Security ITAAC (PS-ITAAC)

STD SUP 14.3-1 Generic PS-ITAAC have been developed in a coordinated effort between the NRC and the Nuclear Energy Institute (NEI) as outlined in Appendix C.II.I-C of Regulatory Guide 1.206. These generic ITAAC have been tailored to the AP1000 design and site-specific security requirements.

14.3.2.3.3 Other Site-Specific Systems

No additional site-specific systems meet the ITAAC selection criteria. Systems not meeting the selection criteria are subject to the normal functional testing to verify that newly designed and installed systems, structures, or components perform as designed.

VEGP SUP 14.3-2 A summary of the AP1000 structures, systems, or components considered for selection is given in Table 14.3-201. This table supplements DCD Table 14.3-1.

14.3.3 CDM SECTION 3.0, NON-SYSTEM BASED DESIGN DESCRIPTIONS AND ITAAC

Add the following new subsection after the first paragraph in DCD Subsection 14.3.3

14.3.3.1 Non-System Based Site Specific ITAAC

VEGP SUP 14.3-3 Site specific ITAAC (SS-ITAAC) for the Nuclear Island engineered backfill and waterproof membrane are provided in ESPA SSAR Subsections 2.5.4.5.5 and 3.8.5 respectively.

Table 14.3-201
ITAAC Screening Summary

	Structure/ System Acronym	Structure/System Description	Selected for ITAAC
VEGP SUP 14.3-2	DRS	Storm Drain System	XX
	MES	Meteorological and Environmental Monitoring System	XX
	RWS	Raw Water System	XX
	TVS	Closed Circuit TV System	XX
	VPS	Pump House Building Ventilation System	NA
	ZBS	Transmission Switchyard and Offsite Power System	XX

Legend: XX = Site-specific system selected for ITAAC – title only, no entry for COLA

NA = System is not part of VEGP design

14.4 COMBINED LICENSE APPLICANT RESPONSIBILITIES

This section of the referenced DCD is incorporated by reference with the following departures and/or supplements.

14.4.1 ORGANIZATION AND STAFFING

STD COL 14.4-1 This COL Item is addressed in Section 14.2.

14.4.2 TEST SPECIFICATIONS AND PROCEDURES

STD COL 14.4-2 Preoperational and startup procedures are provided for the NRC in accordance with the requirements of DCD Subsection 14.2.3.

14.4.4 REVIEW AND EVALUATION OF TEST RESULTS

STD COL 14.4-4 Review and evaluation of individual test results, as well as final review of overall test results and selected milestones or hold points is addressed in Subsection 14.2.3.2. Test exceptions or results that do not meet acceptance criteria are identified to the affected and responsible design organizations, and corrective actions and retests, as required, are performed.

14.4.5 INTERFACE REQUIREMENTS

STD COL 14.4-5 This COL Item is addressed in Subsections 14.2.9.4.15, 14.2.9.4.22 through 14.2.9.4.27, 14.2.10.4.29, and in the Physical Security Plan.

14.4.6 FIRST-PLANT-ONLY AND THREE-PLANT-ONLY TESTS

STD COL 14.4-6 First-plant-only and first-three-plant-only tests either are performed in accordance with DCD Section 14.2.5 or a justification is provided that the results of the first-plant-only and first-three-plant-only tests are applicable to a subsequent plant. If the tests are not performed, the justification is provided prior to fuel loading.

CHAPTER 15

ACCIDENT ANALYSES

TABLE OF CONTENTS

Section	Title	Page
15.0	ACCIDENT ANALYSES	15.0-1
15.1	INCREASE IN HEAT REMOVAL FROM THE PRIMARY SYSTEM	15.1-1
15.2	DECREASE IN HEAT REMOVAL BY THE SECONDARY SYSTEM	15.2-1
15.3	DECREASE IN REACTOR COOLANT SYSTEM FLOW RATE	15.3-1
15.4	REACTIVITY AND POWER DISTRIBUTION ANOMALIES	15.4-1
15.5	INCREASE IN REACTOR COOLANT INVENTORY	15.5-1
15.6	DECREASE IN REACTOR COOLANT INVENTORY	15.6-1
15.6.5.3.7.3	Atmospheric Dispersion Factors	15.6-1
15.7	RADIOACTIVE RELEASE FROM A SUBSYSTEM OR COMPONENT	15.7-1
15.7.6	COMBINED LICENSE INFORMATION	15.7-1
15.8	ANTICIPATED TRANSIENTS WITHOUT SCRAM	15.8-1
APP. 15A	EVALUATION MODELS AND PARAMETERS FOR ANALYSIS OF RADIOLOGICAL CONSEQUENCES OF ACCIDENTS	15A-1
15A.3.3	Atmospheric Dispersion Factors	15A-1
APP. 15B	REMOVAL OF AIRBORNE ACTIVITY FROM THE CONTAINMENT ATMOSPHERE FOLLOWING A LOCA	15B-1

CHAPTER 15

ACCIDENT ANALYSES

15.0 ACCIDENT ANALYSES

This section of the referenced DCD is incorporated by reference with no departures or supplements.

15.1 INCREASE IN HEAT REMOVAL FROM THE PRIMARY SYSTEM

This section of the referenced DCD is incorporated by reference with no departures or supplements.

15.2 DECREASE IN HEAT REMOVAL BY THE SECONDARY SYSTEM

This section of the referenced DCD is incorporated by reference with no departures or supplements.

15.3 DECREASE IN REACTOR COOLANT SYSTEM FLOW RATE

This section of the referenced DCD is incorporated by reference with no departures or supplements.

15.4 REACTIVITY AND POWER DISTRIBUTION ANOMALIES

This section of the referenced DCD is incorporated by reference with no departures or supplements.

15.5 INCREASE IN REACTOR COOLANT INVENTORY

This section of the referenced DCD is incorporated by reference with no departures or supplements.

15.6 DECREASE IN REACTOR COOLANT INVENTORY

This section of the referenced DCD is incorporated by reference with the following departures and/or supplements.

15.6.5.3.7.3 Atmospheric Dispersion Factors

Add the following paragraph at the end of DCD Subsection 15.6.5.3.7.3.

VEGP COL 2.3-4 Site-specific χ/Q values provided in Section 2.3 are bounded by the values given in DCD Tables 15A-5 and 15A-6.

15.7 RADIOACTIVE RELEASE FROM A SUBSYSTEM OR COMPONENT

This section of the referenced DCD is incorporated by reference with the following departures and/or supplements.

15.7.6 COMBINED LICENSE INFORMATION

VEGP COL 15.7-1 This COL item is addressed in ESPA SSAR Subsection 2.4.13.

15.8 ANTICIPATED TRANSIENTS WITHOUT SCRAM

This section of the referenced DCD is incorporated by reference with no departures or supplements.

APPENDIX 15A
EVALUATION MODELS AND PARAMETERS FOR ANALYSIS OF RADIOLOGICAL CONSEQUENCES OF ACCIDENTS

This section of the referenced DCD is incorporated by reference with the following departures and/or supplements.

15A.3.3 Atmospheric Dispersion Factors

Replace the third paragraph in DCD Subsection 15A.3.3 with the following:

VEGP COL 2.3-4 Site-specific χ/Q values provided in Section 2.3 are bounded by the values given in DCD Tables 15A-5 and 15A-6.

APPENDIX 15B
REMOVAL OF AIRBORNE ACTIVITY FROM THE CONTAINMENT ATMOSPHERE FOLLOWING A LOCA

This section of the referenced DCD is incorporated by reference with no departures or supplements.

CHAPTER 16

TECHNICAL SPECIFICATIONS

TABLE OF CONTENTS

Section	Title	Page
16.1	TECHNICAL SPECIFICATIONS	16.1-1
16.1.1	INTRODUCTION TO TECHNICAL SPECIFICATIONS	16.1-1
16.2	DESIGN RELIABILITY ASSURANCE PROGRAM	16.2-1
16.3	INVESTMENT PROTECTION	16.3-1
16.3.1	INVESTMENT PROTECTION SHORT-TERM AVAILABILITY CONTROLS	16.3-1
16.3.2	COMBINED LICENSE INFORMATION	16.3-1

CHAPTER 16

TECHNICAL SPECIFICATIONS

16.1 TECHNICAL SPECIFICATIONS

Subsections 16.1.1 and 16.1.2 of the DCD are incorporated by reference with no departures or supplements. The generic technical specifications and bases in Chapter 16 of the DCD are not considered Tier 2 information; therefore they are not incorporated by reference within this FSAR. However, the generic technical specifications and bases provided with Chapter 16 of the DCD are incorporated by reference into the plant-specific technical specifications provided in Part 4 of this COL application. In addition, a full information set of the plant-specific technical specifications and bases are provided in Part 4 of this COL application.

16.1.1 INTRODUCTION TO TECHNICAL SPECIFICATIONS

Combined License Information

VEGP COL 16.1-1 This COL Item (i.e., information addressing each of the remaining brackets [ ] in the AP1000 generic technical specifications) is addressed in Part 4 of the COLA.

16.2 DESIGN RELIABILITY ASSURANCE PROGRAM

This section of the referenced DCD is incorporated by reference with no departures or supplements.

16.3 INVESTMENT PROTECTION

This section of the referenced DCD is incorporated by reference with the following departures and/or supplements.

16.3.1 INVESTMENT PROTECTION SHORT-TERM AVAILABILITY CONTROLS

Add the following paragraph after the bulleted items at the end of the second paragraph of DCD Subsection 16.3.1:

STD COL 16.3-1 Station procedures govern and control the operability of investment protection systems, structures, and components, in accordance with Table 16.3-2 of the DCD, and provide the operating staff with instruction for implementing required actions when operability requirements are not met. Procedure development is addressed in FSAR Section 13.5.

16.3.2 COMBINED LICENSE INFORMATION

STD COL 16.3-1 This COL Item is addressed in Subsection 16.3.1.

CHAPTER 17

QUALITY ASSURANCE

TABLE OF CONTENTS

Section	Title	Page
17.1	QUALITY ASSURANCE DURING THE DESIGN AND CONSTRUCTION PHASES	17.1-1
17.2	QUALITY ASSURANCE DURING THE OPERATIONS PHASE	17.2-1
17.3	QUALITY ASSURANCE DURING DESIGN, PROCUREMENT, FABRICATION, INSPECTION, AND/OR TESTING OF NUCLEAR POWER PLANT ITEMS	17.3-1
17.4	DESIGN RELIABILITY ASSURANCE PROGRAM	17.4-1
17.5	QUALITY ASSURANCE PROGRAM DESCRIPTION - NEW LICENSE APPLICANTS	17.5-1
17.6	MAINTENANCE RULE PROGRAM	17.6-1
17.7	COMBINED LICENSE INFORMATION ITEMS	17.7-1
17.8	REFERENCES	17.8-1

CHAPTER 17

QUALITY ASSURANCE

17.1 QUALITY ASSURANCE DURING THE DESIGN AND CONSTRUCTION PHASES

This section of the referenced DCD is incorporated by reference with the following departures and/or supplements.

Replace the information in DCD Section 17.1 with the following information.

VEGP COL 17.5-1 SNC is responsible for the establishment and execution of quality assurance program requirements during the design, construction, and operations phases of VEGP Units 3 and 4. SNC may delegate the work of establishing and executing the quality assurance program, or any parts thereof, but retains responsibility for the quality assurance program.

Southern Nuclear has contracted with several vendors to develop the VEGP Units 3 and 4 COL application, including site characterization activities. The process of collection, review, and analysis of specific data was performed principally either under the Bechtel Corporation QA program or the MacTec QA program. SNC oversight is provided through its review and approval of these QA plans, by conducting QA audits and surveillances, and by direct participation in and oversight of the COL application development activities. The later includes provide site specific applicant input and review of COL application content, signing the COL application as applicant at submittal, and working directly with these and other contractors to respond to NRC requests for additional information.

The “Quality Assurance Program Description” (QAPD) discussed in Section 17.5 establishes the QA program under which this COL application was developed and further established the requirements for the remaining portion of the design and construction phases.

17.2 QUALITY ASSURANCE DURING THE OPERATIONS PHASE

This section of the referenced DCD is incorporated by reference with no departures or supplements.

17.3 QUALITY ASSURANCE DURING DESIGN, PROCUREMENT, FABRICATION, INSPECTION, AND/OR TESTING OF NUCLEAR POWER PLANT ITEMS

This section of the referenced DCD is incorporated by reference with no departures or supplements.

17.4 DESIGN RELIABILITY ASSURANCE PROGRAM

This section of the referenced DCD is incorporated by reference with no departures or supplements.

VEGP DEP 1.1-1

17.5 QUALITY ASSURANCE PROGRAM DESCRIPTION - NEW LICENSE APPLICANTS

VEGP COL 17.5-1

STD COL 17.5-2

STD COL 17.5-4

STD COL 17.5-8

The Quality Assurance Program in place during the design, construction, and operations phases is described in the QAPD, which is maintained as a separate document. This QAPD is based on NEI 06-14A, “Quality Assurance Program Description,” which was approved by the NRC as indicated in Reference 201.

Table 13.4-201 provides milestones for operational quality assurance program implementation.

VEGP DEP 1.1-1

17.6 MAINTENANCE RULE PROGRAM

STD SUP 17.6-1 This section incorporates by reference NEI 07-02A, "Generic FSAR Template Guidance for Maintenance Rule Program Description for Plants Licensed Under 10 CFR Part 52," with the following supplemental information. See Table 1.6-201.

Table 13.4-201 provides milestones for maintenance rule program implementation.

The text of the template provided in NEI 07-02A is generically numbered as "17.X." When the template is incorporated by reference into this FSAR, section numbering is changed from "17.X" to "17.6."

STD SUP 17.6-1 Descriptions of the programs listed in Subsection 17.6.3 of NEI 07-02A are provided in the following FSAR chapters/sections:

The maintenance rule program (Section 17.6)

The quality assurance program (Section 17.5)

Inservice inspection program (Sections 5.2 and 6.6)

Inservice testing program (Section 3.9)

The technical specifications surveillance test program (Chapter 16)

VEGP DEP 1.1-1

17.7 COMBINED LICENSE INFORMATION ITEMS

Section 17.5 of the referenced DCD is incorporated by reference with the following departures and/or supplements.

VEGP COL 17.5-1 This COL Item is addressed in Sections 17.1 and 17.5.

STD COL 17.5-2 This COL Item is addressed in Section 17.5.

STD COL 17.5-4 This COL Item is addressed in Section 17.5.

STD COL 17.5-8 This COL Item is addressed in Section 17.5.

VEGP DEP 1.1-1

17.8 REFERENCES

Section 17.6 of the referenced DCD is incorporated by reference with the following departures and/or supplements.

---

201. U.S. Nuclear Regulatory Commission, “Final Safety Evaluation Report for Technical Report NEI 06-14A “Quality Assurance Program Description,” Rev. 4, ML072200084, July 2007.

CHAPTER 18

HUMAN FACTORS ENGINEERING

TABLE OF CONTENTS

Section	Title	Page
18.1	OVERVIEW	18.1-1
18.2	HUMAN FACTORS ENGINEERING PROGRAM MANAGEMENT	18.2-1
18.2.1.3	Applicable Facilities	18.2-1
18.2.6	COMBINED LICENSE INFORMATION	18.2-1
18.2.6.2	Emergency Operations Facility	18.2-1
18.2.7	REFERENCES	18.2-1
18.3	OPERATING EXPERIENCE REVIEW	18.3-1
18.4	FUNCTIONAL REQUIREMENTS ANALYSIS AND ALLOCATION	18.4-1
18.5	AP1000 TASK ANALYSIS IMPLEMENTATION PLAN	18.5-1
18.6	STAFFING	18.6-1
18.6.1	COMBINED LICENSE INFORMATION ITEM	18.6-2
18.6.2	REFERENCES	18.6-2
18.7	INTEGRATION OF HUMAN RELIABILITY ANALYSIS WITH HUMAN FACTORS ENGINEERING	18.7-1
18.8	HUMAN SYSTEM INTERFACE DESIGN	18.8-1
18.8.3.5	Technical Support Center Mission and Major Tasks	18.8-1
18.8.3.6	Operational Support Center Mission and Major Tasks	18.8-1
18.9	PROCEDURE DEVELOPMENT	18.9-1
18.10	TRAINING PROGRAM DEVELOPMENT	18.10-1
18.10.1	COMBINED LICENSE INFORMATION	18.10-1
18.11	HUMAN FACTORS ENGINEERING VERIFICATION AND VALIDATION	18.11-1
18.12	INVENTORY	18.12-1
18.13	DESIGN IMPLEMENTATION	18.13-1

TABLE OF CONTENTS (Continued)

Section	Title	Page
18.14	HUMAN PERFORMANCE MONITORING	18.14-1

CHAPTER 18

HUMAN FACTORS ENGINEERING

18.1 OVERVIEW

This section of the referenced DCD is incorporated by reference with no departures or supplements.

18.2 HUMAN FACTORS ENGINEERING PROGRAM MANAGEMENT

This section of the referenced DCD is incorporated by reference with the following departures and/or supplements.

18.2.1.3 Applicable Facilities

Add the following information at the end of DCD subsection 18.2.1.3

VEGP COL 18.2-2 A common EOF is located in Birmingham, Alabama, and it supports all of SNC's units including VEGP Units 3 and 4. The EOF communications strategy is described in the Emergency Plan.

The scope of functions and tasks to which the AP1000 Human Factors Engineering Program Plan will be applied to the TSC and the EOF are identified and addressed in Westinghouse Technical Report APP-GW-GLR-136 (Reference 201).

18.2.6 COMBINED LICENSE INFORMATION

18.2.6.2 Emergency Operations Facility

VEGP COL 18.2-2 This COL item is addressed in Section 18.2.1.3.

18.2.7 REFERENCES

201. Westinghouse "AP1000 Human Factors Program Implementation for the Emergency Operations Facility and Technical Support Center," APP-GW-GLR-136, Rev. 1, October 2007.

18.3 OPERATING EXPERIENCE REVIEW

This section of the referenced DCD is incorporated by reference with no departures or supplements.

18.4 FUNCTIONAL REQUIREMENTS ANALYSIS AND ALLOCATION

This section of the referenced DCD is incorporated by reference with no departures or supplements.

18.5 AP1000 TASK ANALYSIS IMPLEMENTATION PLAN

This section of the referenced DCD is incorporated by reference with no departures or supplements.

18.6 STAFFING

This section of the referenced DCD is incorporated by reference with the following departures and/or supplements.

STD COL 18.6-1 Replace the DCD paragraph in Section 18.6 with the following information.

Table 13.1-201 contains the estimated staffing levels for those categories of personnel that are addressed by the Human Factors Engineering program per NUREG-0711, "Human Factors Engineering Program Review Model" (Reference 201), as follows:

- Licensed operators
- Shift Supervisors
- Non-licensed operators
- Shift technical advisors
- Instrumentation and control technicians
- Mechanical maintenance technicians
- Electrical maintenance technicians
- Radiation protection technicians
- Chemistry technicians
- Engineering support

The minimum level of staffing for control room personnel who directly monitor and control the plant is stated in Table 13.1-202 and meets the requirements of 10 CFR 50.54(m). Information about the staffing levels of security personnel is contained in the separately submitted physical security plan.

Qualification requirements of plant personnel listed above are discussed in Subsections 13.1.1.4, Qualifications of Technical Support Personnel, and 13.1.3, Qualification Requirements of Nuclear Plant Personnel, and, for security personnel, in the physical security plan.

The baseline level of staffing for the categories of personnel discussed above is derived from experience in current operating nuclear power plants. The number of personnel in operating plants has evolved over many years to a level that is safe and efficient and provides adequate personnel to operate the plant under all

conditions, including abnormal and emergency, meets regulatory requirements, and supports individual training and personal needs.

Iterative adjustments are implemented to the level of staffing, as necessary, based on findings and input from periodic reviews and staffing analysis. Input to this analysis includes information derived from the other elements of the human factors engineering program, particularly operating experience review, functional requirements analysis and function allocation, task analysis, human reliability analysis, human-system interface design, procedure development, and training program development.

In addition to the regulatory requirements referenced, input to the analyses and the level of staffing is provided by WCAP-14694, "Designer's Input to Determination of the AP600 Main Control Room Staffing Level" (DCD Section 18.6, Reference 1), AP1000 Combined License Technical Report APP-GW-GLR-010, "AP1000 Main Control Room Staff Roles and Responsibilities" (Reference 202), and EPRI Technical Report 1011717, "Program on Technology Innovation: Staff Optimization Scoping Study for New Nuclear Power Plants" (Reference 203).

18.6.1 COMBINED LICENSE INFORMATION ITEM

STD COL 18.6-1 This COL Item is addressed in Section 18.6.

18.6.2 REFERENCES

201. United States Nuclear Regulatory Commission, "Human Factors Engineering Program Review Model," NUREG-0711, Revision 2, February 2004.

202. Westinghouse, "AP1000 Main Control Room Staff Roles and Responsibilities," APP-GW-GLR-010, Rev. 2, June 2007.

203. EPRI, "Program on Technology Innovation: Staff Optimization Scoping Study for New Nuclear Power Plants," Technical Report 1011717, Final Report, August 2005.

18.7 INTEGRATION OF HUMAN RELIABILITY ANALYSIS WITH HUMAN FACTORS ENGINEERING

This section of the referenced DCD is incorporated by reference with no departures or supplements.

18.8 HUMAN SYSTEM INTERFACE DESIGN

This section of the referenced DCD is incorporated by reference with the following departures and/or supplements.

18.8.3.5 Technical Support Center Mission and Major Tasks

Replace the last sentence of the first paragraph with the following:

VEGP DEP 18.8-1 The Technical Support Center (TSC) location is described in the Emergency Plan.

18.8.3.6 Operational Support Center Mission and Major Tasks

Replace the last sentence of the first paragraph with the following:

VEGP DEP 18.8-1 The Operations Support Center (OSC) location is described in the Emergency Plan.

18.9 PROCEDURE DEVELOPMENT

This section of the referenced DCD is incorporated by reference with no departures or supplements.

18.10 TRAINING PROGRAM DEVELOPMENT

This section of the referenced DCD is incorporated by reference with the following departures and/or supplements.

Add the following paragraphs at the end of DCD subsection 18.10:

STD COL 18.10-1 Information regarding training program development is located in Section 13.2, Training. The training organization and roles and responsibilities of training personnel are discussed in Section 13.1, Organizational Structure of Applicant.

18.10.1 COMBINED LICENSE INFORMATION

STD COL 18.10-1 This COL Item is addressed in Section 18.10, 13.1 and 13.2.

18.11 HUMAN FACTORS ENGINEERING VERIFICATION AND VALIDATION

This section of the referenced DCD is incorporated by reference with no departures or supplements.

18.12 INVENTORY

This section of the referenced DCD is incorporated by reference with no departures or supplements.

18.13 DESIGN IMPLEMENTATION

This section of the referenced DCD is incorporated by reference with no departures or supplements.

18.14 HUMAN PERFORMANCE MONITORING

This section of the referenced DCD is incorporated by reference with the following departures and/or supplements.

Replace the DCD paragraph with the following text.

STD COL 18.14-1 Human performance monitoring applies after the plant is placed in operation. The human performance monitoring process implements the guidance and methods as described in DCD Section 18.14 Reference 1.

The human performance monitoring process provides reasonable assurance that:

- The design can be effectively used by personnel, including within the control room and between the control room and local control stations and support centers.
- Changes made to the human system interface(s), procedures, and training do not have adverse effects on personnel performance, (e.g., a change does not interfere with previously trained skills).
- Human actions can be accomplished within time and performance criteria.
- The acceptable level of performance established during the design integrated system validation is maintained.

The human performance monitoring process is structured such that:

- Human actions are monitored commensurate with their safety importance.
- Feedback of information and corrective actions are accomplished in a timely manner.
- Degradation in performance can be detected and corrected before plant safety is compromised (e.g., by use of the plant simulator during training exercises).

The human performance monitoring process for risk-informed changes is integrated into the corrective action program, training program and other programs as appropriate. Identified human performance conditions/issues are evaluated for human factors engineering applicability.

Human factors engineering conditions are assigned specific human factors cause determination codes, trended for indications of degraded performance or potential human performance failures and have specific corrective actions identified.

The cause investigation:

- Identifies the cause of the failure or degraded performance to the extent that corrective action can be taken consistent with the corrective action program requirements.

- Addresses failure significance which includes the circumstances surrounding the failure or degraded performance, the characteristics of the failure, and whether the failure is isolated or has generic or common cause implications.

- Identifies and establishes corrective actions necessary to preclude the recurrence of unacceptable failures or degraded performance in the case of a significant condition adverse to quality.

When appropriate, design changes are integrated into training exercises to monitor for degradation in performance and allow for early detection and corrective actions before plant safety is challenged (e.g., by use of the plant simulator during training exercises).

Plant or personnel performance under actual design conditions may not be readily measurable. When actual conditions cannot be simulated, monitored, or measured, the available information that most closely approximates performance data in actual conditions should be used.

Monitoring strategies for human performance trending after the implementation of design changes is capable of demonstrating that performance is consistent with that assumed in the various analyses conducted to justify the change.

Risk-informed changes are screened commensurate with their safety importance to determine if the change requires monitoring of actions. For changes which require monitoring, the appropriate monitoring requirements are determined and implemented in the training program or other program as appropriate.

CHAPTER 19

PROBABILISTIC RISK ASSESSMENT

TABLE OF CONTENTS

Section	Title	Page
19.1	INTRODUCTION	19.1-1
19.2	INTERNAL INITIATING EVENTS	19.2-1
19.3	MODELING OF SPECIAL INITIATORS	19.3-1
19.4	EVENT TREE MODELS	19.4-1
19.5	SUPPORT SYSTEMS	19.5-1
19.6	SUCCESS CRITERIA ANALYSIS	19.6-1
19.7	FAULT TREE GUIDELINES	19.7-1
19.8	PASSIVE CORE COOLING SYSTEM - PASSIVE RESIDUAL HEAT REMOVAL	19.8-1
19.9	PASSIVE CORE COOLING SYSTEM - CORE MAKEUP TANKS	19.9-1
19.10	PASSIVE CORE COOLING SYSTEM - ACCUMULATOR	19.10-1
19.11	PASSIVE CORE COOLING SYSTEM - AUTOMATIC DEPRESSURIZATION SYSTEM	19.11-1
19.12	PASSIVE CORE COOLING SYSTEM - IN-CONTAINMENT REFUELING WATER STORAGE TANK	19.12-1
19.13	PASSIVE CONTAINMENT COOLING	19.13-1
19.14	MAIN AND STARTUP FEEDWATER SYSTEM	19.14-1
19.15	CHEMICAL AND VOLUME CONTROL SYSTEM	19.15-1
19.16	CONTAINMENT HYDROGEN CONTROL SYSTEM	19.16-1
19.17	NORMAL RESIDUAL HEAT REMOVAL SYSTEM	19.17-1
19.18	COMPONENT COOLING WATER SYSTEM	19.18-1
19.19	SERVICE WATER SYSTEM	19.19-1

TABLE OF CONTENTS (Continued)

Section	Title	Page
19.20	CENTRAL CHILLED WATER SYSTEM	19.20-1
19.21	AC POWER SYSTEM	19.21-1
19.22	CLASS 1E DC & UPS SYSTEM	19.22-1
19.23	NON-CLASS 1E DC & UPS SYSTEM	19.23-1
19.24	CONTAINMENT ISOLATION	19.24-1
19.25	COMPRESSED AND INSTRUMENT AIR SYSTEM	19.25-1
19.26	PROTECTION AND SAFETY MONITORING SYSTEM	19.26-1
19.27	DIVERSE ACTUATION SYSTEM	19.27-1
19.28	PLANT CONTROL SYSTEM	19.28-1
19.29	COMMON CAUSE ANALYSIS	19.29-1
19.30	HUMAN RELIABILITY ANALYSIS	19.30-1
19.31	OTHER EVENT TREE NODE PROBABILITIES	19.31-1
19.32	DATA ANALYSIS AND MASTER DATA BANK	19.32-1
19.33	FAULT TREE AND CORE DAMAGE QUANTIFICATION	19.33-1
19.34	SEVERE ACCIDENT PHENOMENA TREATMENT	19.34-1
19.35	CONTAINMENT EVENT TREE ANALYSIS	19.35-1
19.36	REACTOR COOLANT SYSTEM DEPRESSURIZATION	19.36-1
19.37	CONTAINMENT ISOLATION	19.37-1
19.38	REACTOR VESSEL REFLOODING	19.38-1
19.39	IN-VESSEL RETENTION OF MOLTEN CORE DEBRIS	19.39-1
19.40	PASSIVE CONTAINMENT COOLING	19.40-1
19.41	HYDROGEN MIXING AND COMBUSTION ANALYSIS	19.41-1

TABLE OF CONTENTS (Continued)

Section	Title	Page
19.42	CONDITIONAL CONTAINMENT FAILURE PROBABILITY DISTRIBUTION	19.42-1
19.43	RELEASE FREQUENCY QUANTIFICATION	19.43-1
19.44	MAAP4.0 CODE DESCRIPTION AND AP1000 MODELING	19.44-1
19.45	FISSION PRODUCT SOURCE TERMS	19.45-1
19.46	DELETED	19.46-1
19.47	DELETED	19.47-1
19.48	DELETED	19.48-1
19.49	OFFSITE DOSE EVALUATION	19.49-1
19.50	IMPORTANCE AND SENSITIVITY ANALYSIS	19.50-1
19.51	UNCERTAINTY ANALYSIS	19.51-1
19.52	DELETED	19.52-1
19.53	DELETED	19.53-1
19.54	LOW POWER AND SHUTDOWN PRA ASSESSMENT	19.54-1
19.55	SEISMIC MARGIN ANALYSIS	19.55-1
19.56	PRA INTERNAL FLOODING ANALYSIS	19.56-1
19.57	INTERNAL FIRE ANALYSIS	19.57-1
19.58	WINDS, FLOODS, AND OTHER EXTERNAL EVENTS	19.58-1
19.59	PRA RESULTS AND INSIGHTS	19.59-1
19.59.10.5	Combined License Information	19.59-1
19.59.10.6	PRA Configuration Controls	19.59-2
APP. 19A	THERMAL HYDRAULIC ANALYSIS TO SUPPORT SUCCESS CRITERIA	19A-1
APP. 19B	EX-VESSEL SEVERE ACCIDENT PHENOMENA	19B-1

TABLE OF CONTENTS (Continued)

Section	Title	Page
APP. 19C	ADDITIONAL ASSESSMENT OF AP1000 DESIGN FEATURES	19C-1
APP. 19D	EQUIPMENT SURVIVABILITY ASSESSMENT	19D-1
APP. 19E	SHUTDOWN EVALUATION	19E-1

CHAPTER 19

PROBABILISTIC RISK ASSESSMENT

19.1 INTRODUCTION

This section of the referenced DCD is incorporated by reference with no departures or supplements.

19.2 INTERNAL INITIATING EVENTS

This section of the referenced DCD is incorporated by reference with no departures or supplements.

19.3 MODELING OF SPECIAL INITIATORS

This section of the referenced DCD is incorporated by reference with no departures or supplements.

19.4 EVENT TREE MODELS

This section of the referenced DCD is incorporated by reference with no departures or supplements.

19.5 SUPPORT SYSTEMS

This section of the referenced DCD is incorporated by reference with no departures or supplements.

19.6 SUCCESS CRITERIA ANALYSIS

This section of the referenced DCD is incorporated by reference with no departures or supplements.

19.7 FAULT TREE GUIDELINES

This section of the referenced DCD is incorporated by reference with no departures or supplements.

19.8 PASSIVE CORE COOLING SYSTEM - PASSIVE RESIDUAL HEAT REMOVAL

This section of the referenced DCD is incorporated by reference with no departures or supplements.

19.9 PASSIVE CORE COOLING SYSTEM - CORE MAKEUP TANKS

This section of the referenced DCD is incorporated by reference with no departures or supplements.

19.10 PASSIVE CORE COOLING SYSTEM - ACCUMULATOR

This section of the referenced DCD is incorporated by reference with no departures or supplements.

19.11 PASSIVE CORE COOLING SYSTEM - AUTOMATIC DEPRESSURIZATION SYSTEM

This section of the referenced DCD is incorporated by reference with no departures or supplements.

19.12 PASSIVE CORE COOLING SYSTEM - IN-CONTAINMENT REFUELING WATER STORAGE TANK

This section of the referenced DCD is incorporated by reference with no departures or supplements.

19.13 PASSIVE CONTAINMENT COOLING

This section of the referenced DCD is incorporated by reference with no departures or supplements.

19.14 MAIN AND STARTUP FEEDWATER SYSTEM

This section of the referenced DCD is incorporated by reference with no departures or supplements.

19.15 CHEMICAL AND VOLUME CONTROL SYSTEM

This section of the referenced DCD is incorporated by reference with no departures or supplements.

19.16 CONTAINMENT HYDROGEN CONTROL SYSTEM

This section of the referenced DCD is incorporated by reference with no departures or supplements.

19.17 NORMAL RESIDUAL HEAT REMOVAL SYSTEM

This section of the referenced DCD is incorporated by reference with no departures or supplements.

19.18 COMPONENT COOLING WATER SYSTEM

This section of the referenced DCD is incorporated by reference with no departures or supplements.

19.19 SERVICE WATER SYSTEM

This section of the referenced DCD is incorporated by reference with no departures or supplements.

19.20 CENTRAL CHILLED WATER SYSTEM

This section of the referenced DCD is incorporated by reference with no departures or supplements.

19.21 AC POWER SYSTEM

This section of the referenced DCD is incorporated by reference with no departures or supplements.

19.22 CLASS 1E DC & UPS SYSTEM

This section of the referenced DCD is incorporated by reference with no departures or supplements.

19.23 NON-CLASS 1E DC & UPS SYSTEM

This section of the referenced DCD is incorporated by reference with no departures or supplements.

19.24 CONTAINMENT ISOLATION

This section of the referenced DCD is incorporated by reference with no departures or supplements.

19.25 COMPRESSED AND INSTRUMENT AIR SYSTEM

This section of the referenced DCD is incorporated by reference with no departures or supplements.

19.26 PROTECTION AND SAFETY MONITORING SYSTEM

This section of the referenced DCD is incorporated by reference with no departures or supplements.

19.27 DIVERSE ACTUATION SYSTEM

This section of the referenced DCD is incorporated by reference with no departures or supplements.

19.28 PLANT CONTROL SYSTEM

This section of the referenced DCD is incorporated by reference with no departures or supplements.

19.29 COMMON CAUSE ANALYSIS

This section of the referenced DCD is incorporated by reference with no departures or supplements.

19.30 HUMAN RELIABILITY ANALYSIS

This section of the referenced DCD is incorporated by reference with no departures or supplements.

19.31 OTHER EVENT TREE NODE PROBABILITIES

This section of the referenced DCD is incorporated by reference with no departures or supplements.

19.32 DATA ANALYSIS AND MASTER DATA BANK

This section of the referenced DCD is incorporated by reference with no departures or supplements.

19.33 FAULT TREE AND CORE DAMAGE QUANTIFICATION

This section of the referenced DCD is incorporated by reference with no departures or supplements.

19.34 SEVERE ACCIDENT PHENOMENA TREATMENT

This section of the referenced DCD is incorporated by reference with no departures or supplements.

19.35 CONTAINMENT EVENT TREE ANALYSIS

This section of the referenced DCD is incorporated by reference with no departures or supplements.

19.36 REACTOR COOLANT SYSTEM DEPRESSURIZATION

This section of the referenced DCD is incorporated by reference with no departures or supplements.

19.37 CONTAINMENT ISOLATION

This section of the referenced DCD is incorporated by reference with no departures or supplements.

19.38 REACTOR VESSEL REFLOODING

This section of the referenced DCD is incorporated by reference with no departures or supplements.

19.39 IN-VESSEL RETENTION OF MOLTEN CORE DEBRIS

This section of the referenced DCD is incorporated by reference with no departures or supplements.

19.40 PASSIVE CONTAINMENT COOLING

This section of the referenced DCD is incorporated by reference with no departures or supplements.

19.41 HYDROGEN MIXING AND COMBUSTION ANALYSIS

This section of the referenced DCD is incorporated by reference with no departures or supplements.

19.42 CONDITIONAL CONTAINMENT FAILURE PROBABILITY DISTRIBUTION

This section of the referenced DCD is incorporated by reference with no departures or supplements.

19.43 RELEASE FREQUENCY QUANTIFICATION

This section of the referenced DCD is incorporated by reference with no departures or supplements.

19.44 MAAP4.0 CODE DESCRIPTION AND AP1000 MODELING

This section of the referenced DCD is incorporated by reference with no departures or supplements.

19.45 FISSION PRODUCT SOURCE TERMS

This section of the referenced DCD is incorporated by reference with no departures or supplements.

19.46 DELETED

This section of the referenced DCD is incorporated by reference with no departures or supplements.

19.47 DELETED

This section of the referenced DCD is incorporated by reference with no departures or supplements.

19.48 DELETED

This section of the referenced DCD is incorporated by reference with no departures or supplements.

19.49 OFFSITE DOSE EVALUATION

This section of the referenced DCD is incorporated by reference with no departures or supplements.

19.50 IMPORTANCE AND SENSITIVITY ANALYSIS

This section of the referenced DCD is incorporated by reference with no departures or supplements.

19.51 UNCERTAINTY ANALYSIS

This section of the referenced DCD is incorporated by reference with no departures or supplements.

19.52 DELETED

This section of the referenced DCD is incorporated by reference with no departures or supplements.

19.53 DELETED

This section of the referenced DCD is incorporated by reference with no departures or supplements.

19.54 LOW POWER AND SHUTDOWN PRA ASSESSMENT

This section of the referenced DCD is incorporated by reference with no departures or supplements.

19.55 SEISMIC MARGIN ANALYSIS

This section of the referenced DCD is incorporated by reference with no departures or supplements.

19.56 PRA INTERNAL FLOODING ANALYSIS

This section of the referenced DCD is incorporated by reference with no departures or supplements.

19.57 INTERNAL FIRE ANALYSIS

This section of the referenced DCD is incorporated by reference with no departures or supplements.

19.58 WINDS, FLOODS, AND OTHER EXTERNAL EVENTS

This section of the referenced DCD is incorporated by reference with no departures or supplements.

19.59 PRA RESULTS AND INSIGHTS

This section of the referenced DCD is incorporated by reference with the following departures and/or supplements.

19.59.10.5 Combined License Information

STD COL 19.59.10-1

A review of the differences between the as-built plant and the design used as the basis for the AP1000 seismic margins analysis will be completed prior to fuel load. A verification walkdown will be performed with the purpose of identifying differences between the as-built plant and the design. Any differences will be evaluated to determine if there is a significant adverse effect on the seismic margins analysis results. A comparison of the as-built SSC high confidence, low probability of failures (HCLPFs) to those assumed in the AP1000 seismic margin evaluation will be performed prior to fuel load. Deviations from the HCLPF values or assumptions in the seismic margin evaluation due to the as-built configuration and final analysis will be evaluated to determine if vulnerabilities have been introduced.

VEGP COL 19.59.10-2

A review of the differences between the as-built plant and the design used as the basis for the AP1000 PRA and DCD Table 19.59-18 will be completed prior to fuel load. The PRA will be updated to reflect these differences if they potentially result in a significant increase in core damage frequency or large release frequency.

It has been confirmed that the Winds, Floods, and Other External Events analysis documented in DCD Section 19.58 is applicable to the site. The site-specific design has been evaluated and is consistent with the AP1000 PRA assumptions. Therefore, Chapter 19 of the AP1000 DCD is applicable to this design.

STD COL 19.59.10-3

A review of the differences between the as-built plant and the design used as the basis for the AP1000 internal fire and internal flood analysis will be completed prior to fuel load. Differences will be evaluated to determine if there is significant adverse effect on the internal fire and internal flood analysis results.

STD COL 19.59.10-4

The AP1000 Severe Accident Management Guidance from APP-GW-GLR-070, Reference 1 to DCD Section 19.59, will be implemented on a site-specific basis. The Severe Accident Management Guidance (SAMG) implementation will include: providing the appropriate SAMG information in the control room and TSC; defining the roles and responsibilities of the plant Emergency Response

Organization (ERO) with respect to usage of the SAMG; and providing SAMG training for the appropriate ERO members.

STD COL 19.59.10-5

A thermal lag assessment of the as-built equipment required to mitigate severe accidents (hydrogen igniters and containment penetrations) will be performed to provide additional assurance that this equipment can perform its severe accident functions during environmental conditions resulting from hydrogen burns associated with severe accidents. This assessment will be performed prior to fuel load and is required only for equipment used for severe accident mitigation that has not been tested at severe accident conditions. The ability of the as-built equipment to perform during severe accident hydrogen burns will be assessed using the Environment Enveloping method or the Test Based Thermal Analysis method discussed in EPRI NP-4354 (DCD Section 19.59, Reference 3).

Add the following new information after DCD Subsection 19.59.10.5:

STD SUP 19.59-1

19.59.10.6 PRA Configuration Controls

PRA configuration controls contain the following key elements:

- A process for monitoring PRA inputs and collecting new information.
- A process that maintains and updates the PRA to be reasonably consistent with the as-built, as operated plant.
- A process that considers the cumulative impact of pending changes when applying the PRA.
- A process that evaluates the impact of changes on currently implemented risk-informed decisions that have used the PRA.
- A process that maintains configuration control of computer codes used to support PRA quantification.
- A process for upgrading the PRA to meet PRA standards that the NRC has endorsed.
- Documentation of the PRA.

PRA configuration controls are consistent with the regulatory positions on maintenance and upgrades in Regulatory Guide 1.200.

Schedule for Maintenance and Upgrades of the PRA

The PRA update process is a means to reasonably reflect the as designed and as operated plant configurations in the PRA models. The PRA upgrade process includes an update of the PRA plus a general review of the entire PRA model, and as applicable the application of new software that implements a different methodology, implementation of new modeling techniques, as well as a comprehensive documentation effort.

- During construction, the PRA is upgraded prior to fuel load to cover those initiating events and modes of operation contained in NRC-endorsed consensus standards on PRA in effect one year prior to the scheduled date of the initial fuel load for a Level 1 and Level 2 PRA.

- Prior to license renewal the PRA is upgraded to include all modes of operation.

- During operation, PRA updates are completed as part of the upgrade process at least once every four years.

- A screening process is used to determine whether a PRA update should be performed more frequently based upon the nature of the changes in design or procedures. The screening process considers whether the changes affect the PRA insights. Changes that do not meet the threshold for immediate update are tracked for the next regulatory scheduled update. If the screening process determines that the changes do warrant a PRA update, the update is made as soon as practicable consistent with the required change importance and the applications being used.

PRA upgrades are performed in accordance with 10 CFR 50.71(h).

Process for Maintenance and Upgrades of the PRA

Various information sources are monitored to determine changes or new information that affects the model assumptions or quantification. Plant specific design, procedure, and operational changes are reviewed for risk impact. Information sources include applicable operating experience, plant modifications, engineering calculation revisions, procedure changes, industry studies, and NRC information.

The PRA upgrade includes initiating events and modes of operation contained in NRC-endorsed consensus standards on PRA in effect one year prior to each required upgrade.

This PRA maintenance and update incorporates the appropriate new information including significant modeling errors discovered during routine use of the PRA.

Once the PRA model elements requiring change are identified, the PRA computer models are modified and appropriate documents revised. Documentation of modifications to the PRA model include the changes as well as the upgraded portions clearly indicating what has been changed. The impact on the risk insights is clearly indicated.

PRA Quality Assurance

Maintenance and upgrades of the PRA are subject to the following quality assurance provisions:

Procedures identify the qualifications of personnel who perform the maintenance and upgrade of the PRA.

Procedures provide for the control of PRA documentation, including revisions.

For updates of the PRA, procedures provide for independent review, or checking of the calculations and information.

Procedures provide for an independent review of the model after an upgrade is completed. Additionally, after the PRA is upgraded, the PRA is reviewed by outside PRA experts such as industry peer review teams and the comments incorporated to maintain the PRA current with industry practices. Peer review findings are entered into a tracking system. PRA upgrades receive a peer review for those aspects of the PRA that are upgraded.

PRA models and applications are documented in a manner that facilitates peer review as well as future updates and applications of the PRA by describing the processes that were used, and provide details of the assumptions made and their bases. PRA documentation is developed such that traceability and reproducibility is maintained. PRA documentation is maintained in accordance with Regulatory Position 1.3 of Regulatory Guide 1.200.

Procedures provide for appropriate attention or corrective actions if assumptions, analyses, or information used previously are changed or determined to be in error. Potential impacts to the PRA model (i.e., design change notices, calculations, and procedure changes) are tracked. Errors found in the PRA model between periodic updates are tracked using the site tracking system.

PRA-Related Input to Other Programs and Processes

The PRA provides input to various programs and processes, such as the Maintenance Rule implementation, reactor oversight process, the RAP, and the RTNSS program. The use of the PRA in these programs is discussed below, or cross-references to the appropriate FSAR sections are provided.

PRA Input to Design Programs and Processes

The PRA insights identified during the design development are discussed in DCD Subsection 19.59.10.4 and summarized in DCD Table 19.59-18.
DCD Section 14.3 summarizes the design material contained in AP1000 that has been incorporated into the Tier 1 information from the PRA. A discussion of the plant features important to reducing risk is provided in DCD Subsection 19.59.9.

PRA Input to the Maintenance Rule Implementation

The PRA is used as an input in determining the safety significance classification and bases of in-scope SSCs. SSCs identified as risk-significant via the Reliability Assurance Program for the design phase (DRAP, Section 17.4) are included within the initial Maintenance Rule scope as high safety significance SSCs.

For risk-significant SSCs identified via DRAP, performance criteria are established, by the Maintenance Rule expert panel using input from the reliability and availability assumptions used in the PRA, to monitor the effectiveness of the maintenance performed on the SSCs.

The Maintenance Rule implementation is discussed in Section 17.6.

PRA Input to the Reactor Oversight Process

The mitigating systems performance indicators (MSPI) are evaluated based on the indicators and methodologies defined in NEI 99-02.

The Significance Determination Process (SDP) uses risk insights, where appropriate, to determine the safety significance of inspection findings.

PRA Input to the Reliability Assurance Program

The PRA input to the Reliability Assurance Program is discussed in DCD Subsection 19.59.10.1.

PRA Input to the Regulatory Treatment of Nonsafety-Related Systems Programs

The importance of nonsafety-related SSCs in the AP1000 has been evaluated using PRA insights to identify SSCs that are important in protecting the utility's investment and for preventing and mitigating severe accidents. These investment protection systems, structures and components are included in the D-RAP/MR Program (refer to Section 17.4), which provides confidence that availability and reliability are designed into the plant and that availability and reliability are maintained throughout plant life through the maintenance rule. Technical Specifications are not required for these SSCs because they do not meet the selection criteria applied to the AP1000 (refer to Subsection 16.1.1).

MOV Program

The MOV Program includes provisions to accommodate the use of risk-informed inservice testing of MOVs (Subsection 3.9.6).

APPENDIX 19A
THERMAL HYDRAULIC ANALYSIS TO SUPPORT SUCCESS CRITERIA

This section of the referenced DCD is incorporated by reference with no departures or supplements.

APPENDIX 19B
EX-VESSEL SEVERE ACCIDENT PHENOMENA

This section of the referenced DCD is incorporated by reference with no departures or supplements.

APPENDIX 19C
ADDITIONAL ASSESSMENT OF AP1000 DESIGN FEATURES

This section of the referenced DCD is incorporated by reference with no departures or supplements.

APPENDIX 19D
EQUIPMENT SURVIVABILITY ASSESSMENT

This section of the referenced DCD is incorporated by reference with no departures or supplements.

APPENDIX 19E
SHUTDOWN EVALUATION

This section of the referenced DCD is incorporated by reference with no departures or supplements.