Entergy

Entergy Operations, Inc.
1448 S.R. 333
Russellville, AR 72802
Tel 479-858-3110

Timothy G. Mitchell
Vice President, Operations
Arkansas Nuclear One

1CAN040802

April 3, 2008

U.S. Nuclear Regulatory Commission
Attn: Document Control Desk
Washington, DC 20555

SUBJECT: Supplement to Amendment Request
Regarding Technical Specification Changes and Analyses Relating
to Use of Alternate Source Term
Arkansas Nuclear One, Unit 1
Docket No. 50-313
License No. DPR-51

REFERENCE:
1. Entergy letter dated October 22, 2007, "License Amendment Request: Technical Specification Changes and Analyses Relating to Use of Alternate Source Term" (1CAN100703) (TAC NO: MD7178)
2. Entergy letter dated March 27, 2008, "Supplement to Amendment Request: Technical Specification Changes and Analyses Relating to Use of Alternate Source Term" (1CAN030803) (TAC NO: MD7178)

Dear Sir or Madam:

By letter (Reference 1), Entergy Operations, Inc. (Entergy) proposed a change to the Arkansas Nuclear One, Unit 1 (ANO-1) Technical Specifications (TSs) to support adoption and use of Alternate Source Term (AST) in the ANO-1 Safety Analyses.

On February 27, 2008, Entergy received a request for additional information (RAI) with regard to the subject letter (Reference 1). Entergy submitted additional information on March 27, 2008 (Reference 2) which included files on an enclosed Compact Disc (CD). The NRC subsequently rejected the letter of Reference 2 because the file formats included on the enclosed CD did not meet NRC electronic file criteria. In accordance with discussion held with the NRC on March 31, 2008, this letter resubmits the requested additional information, removing the Adobe-based calculations that were previously contained on the CD and attaching them to this letter. The relevant remaining data files are included on the new CD enclosed with this letter, "unzipped" in order to meet NRC expectations.

A001
NRR

Therefore, Attachment 1 includes Entergy's response to this RAI. Attachment 2 provides additional information with regard to AST application. Attachment 3 provides a mark-up of the ANO-1 Safety Analysis Report (SAR). Attachment 4 contains a copy of Engineering Calculation 95-E-0030-09, "Control Room Atmospheric Diversion Factors (Chi/Q's) for LOCA and MHA Accidents at ANO Units 1 and 2." Attachment 5 contains a copy of Engineering Calculation 95-E-0030-10, "Control Room Atmospheric Diversion Factors (Chi/Q's) for non-LOCA Accidents at ANO Units 1 and 2." Where appropriate, the responses provided in Attachment 1 identify where detailed information may be found in these other attachments/files in order to limit repetition.

There are no technical changes proposed that impact the original no significant hazards consideration included in Reference 1. There are no new commitments contained in this letter.

If you have any questions or require additional information, please contact David Bice at 479-858-5338.

I declare under penalty of perjury that the foregoing is true and correct. Executed on April 3, 2008.

Sincerely,

TGM/dbb

Attachments:
1. Response to Request for Additional Information Regarding Technical Specification Changes and Analyses Relating to Use of Alternate Source Term
2. Additional Information Regarding Use of Alternate Source Term
3. Markup of ANO-1 Safety Analysis Report
4. Engineering Calculation 95-E-0030-09
5. Engineering Calculation 95-E-0030-10

Enclosure: CD Rom containing data files

cc: Mr. Elmo E. Collins
Regional Administrator
U. S. Nuclear Regulatory Commission
Region IV
611 Ryan Plaza Drive, Suite 400
Arlington, TX 76011-8064

NRC Senior Resident Inspector
Arkansas Nuclear One
P. O. Box 310
London, AR 72847

U. S. Nuclear Regulatory Commission
Attn: Mr. Alan B. Wang
MS O-7 D1
Washington, DC 20555-0001

Mr. Bernard R. Bevill
Director Division of Radiation
Control and Emergency Management
Arkansas Department of Health & Human Services
P.O. Box 1437
Slot H-30
Little Rock, AR 72203-1437

Attachment 1

To

1CAN040802

Response to Request for Additional Information Regarding Technical Specification Changes and Analyses Relating to Use of Alternate Source Term

Response to Request for Additional Information Regarding Technical Specification Changes and Analyses Relating to Use of Alternate Source Term

A. INTEGRITY OF FACILITY DESIGN BASIS

1. *Paragraph 50.67(b) of Title 10 of the Code of Federal Regulations (10 CFR), "Accident source term", requires that applications under this section contain an evaluation of the consequences of applicable DBAs previously analyzed in the plant's updated final safety analysis report (UFSAR). Also, RG 1.183 provides guidance to licensees of operating power reactors on acceptable applications of AST; the scope, nature, and documentation of associated analyses and evaluations; consideration of impacts on analyzed risk; and content of submittals. RG 1.183 Regulatory Position 1.1.3, "Integrity of Facility Design Basis" states in principal that a complete re-assessment of all facility radiological analyses would be desirable.*

   a. *Provide details regarding the scope of the ANO-1 AST application as defined in RG 1.183 Regulatory Positions 1.2 and 1.3.*

      Response:

      Please see Sections 1.2, 1.3, and 2.7 of Attachment 2.

   b. *Please list the ANO-1 current licensing basis (CLB) dose consequence events as described in its UFSAR (see RG 1.183 Regulatory Position 1.3.2).*

      Response:

      Please see Attachment 2, Section 1.2. The ANO-1 CLB also includes analyses of "Loss of Load (LOL)," "Loss of AC Power (LOAC)," "Maximum Hypothetical Accident (MHA)," and "Waste Gas Decay Tank Rupture (WGDTR)."

2. *RG 1.183 Regulatory Position 1.3.3, "Use of Sensitivity or Scoping Analyses," states that it may be possible to demonstrate by sensitivity or scoping evaluations that existing analyses have sufficient margin and need not be recalculated.*

   a. *For any CLB dose consequence DBAs that were not re-evaluated as part of this AST LAR, provide the justification for omitting these from the AST DBA analysis and explain if they will be removed from the proposed updated AST licensing basis for ANO-1 (see RG 1.183 Regulatory Position 1.3.4).*

      Response:

      The loss of power cases were not re-evaluated because they are enveloped by the results of the Main Steam Line Break (MSLB) analysis, which includes consideration of loss of offsite power. The CLB MHA and Loss of Coolant Accident (LOCA) events are replaced with a single LOCA event. The WGDTR event was not re-evaluated because its analysis uses a source term that is not impacted by adoption of AST. Based on the above, the LOAC power and MHA analyses are deleted. The analysis of a Loss of Load (LOL) event is maintained because this analysis uses 10 CFR 20 values in lieu of 10 CFR 100 values for acceptance criteria.

b. *For the dose consequence DBAs that have been evaluated for the proposed AST LAR, provide the basic parameters used in the analyses. For each parameter, please indicate the CLB value, the revised value where applicable, as well as the basis for any changes to the CLB. The NRC staff requests that the licensee expand the information in the Attachment 3 tables of the ANO-1 LAR to include CLB parameters whether or not the individual parameter has changed for this amendment (see RG 1.183 Regulatory Position 1.3.2 and 1.3.4 and RIS 2006-04).*

Response:

Attachment 2 provides a discussion of individual analysis parameters, including the basis of the value selected and its relevance to RG 1.183 or the CLB, as applicable. Expanding the Attachment 3 tables included in the original ANO-1 LAR did not appear to add significant benefit since each value illustrated would require a discussion of its origins. Therefore, these tables are not expanded. However, additional tables are included in Attachment 2 of this supplement, which are used to support the aforementioned discussions.

B. ACCIDENT SOURCE TERM

1. *Describe in detail the specific assumptions including the fuel type, cycle length, fuel enrichment, fuel burn up, core power, calculation methodology and conservative assumptions used to determine the inventory of fission products in the reactor core available for release in the ANO-1 AST reanalysis for the analyzed dose consequence DBAs. Describe in detail how ANO-1 met (or deviated from) the guidance in RG 1.183 Section 3.0 and the specific accident appendices of RG 1.183.*

Response:

Please see Section 1.7 of Attachment 2.

2. *Describe the specific assumptions used for the recalculation of the ANO-1 reactor coolant source term (see RG 1.183 Regulatory Position 3.5). Describe in detail the analysis methods and the change in the ANO-1 iodine appearance rates and iodine spiking and if any assumptions are different from the ANO-1 CLB calculations. Also, provide the regulatory basis for the changes from the ANO-1 CLB calculations.*

Response:

Please see Sections 1.7.2, 2.3.2, 2.4.2 and the tables associated with these sections in Attachment 2. Note that the ANO-1 CLB does not require consideration of an iodine spike.

3. *Provide the details of how the amount of fuel damage was determined for each AST DBA other than the loss-of-coolant accident (LOCA) (see RG 1.183 Regulatory Position 3.6).*

Response:

No changes to the CLB accident analyses are proposed. Therefore, the CLB values with respect to fuel damage remain unchanged and are used in the AST analyses.

4. *Provide the basis for not performing the locked rotor analysis for the ANO-1 AST LAR. Include a discussion and provide a design basis reference that concludes no fuel damage as an analyzed consequence of a locked rotor event (See Appendix G and RG 1.183 Regulatory Position 3.6).*

Response:

Please see Section 2.5 of Attachment 2.

C. DOSE CACULATIONAL METHODOLOGY

1. *Describe the major assumptions and methodology for determining the ANO-1 offsite and control room dose consequence values using the AST. List the conservative assumptions used as outlined in RG 1.183 Regulatory Position 4.1 and describe how the assumptions conform or deviate from the regulatory guidance. Discuss and justify any deviations from the ANO-1 current design basis or deviations from RG 1.183 guidance.*

Response:

Please see Attachment 2. The ANO-1 AST analyses conform to all RG 1.1.83 regulatory positions and guidance, as stated in the original ANO-1 AST application.

2. *Outline the major sources of control room accident radiation exposure to control room personnel as outlined in RG 1.183 Regulatory Position 4.2.*

Response:

Please see Sections 1.6.4 and 1.6.5 of Attachment 2.

3. *Describe how your proposed AST amendment conforms or deviates from RG 1.183 Regulatory Position 4.2.2 and describe in detail the control room dose models as outlined in RG 1.183 Regulatory Position 4.2.3.*

Response:

Please see Section 1.6.4 of Attachment 2.

4. *Describe the credit taken for engineered safety features, as outlined in RG 1.183 Regulatory Position 4.2.4, that mitigate airborne activity within the control room.*

Response:

Please see Section 1.6.3 of Attachment 2.

5. *Describe any credit taken for ANO-1 control room protective equipment as outlined in RG 1.183 Regulatory Position 4.2.5.*

Response:

No credit is taken for any control room protective equipment.

6. *Describe other dose consequences affected by the ANO-1 AST LAR including those outlined in Appendix I of RG 1.183. RG 1.183 Regulatory Position 4.3 suggests that, "[t]he guidance provided in Regulatory Positions 4.1 and 4.2 should be used, as applicable, in re-assessing the radiological analyses identified in Regulatory Position 1.3.1, such as those in NUREG-0737 (Ref. 2). Design envelope source terms provided in NUREG-0737 should be updated for consistency with the AST. In general, radiation exposures to plant personnel identified in Regulatory Position 1.3.1 should be expressed in terms of TEDE [total effective dose equivalent]."*

   Response:

   For discussion regarding Appendix I of RG 1.183, please see Section 2.7 of Attachment 2.

   Full implementation of AST at ANO-1 does not require any plant modification and, therefore, does not impact any assumptions or inputs for any of the analyses listed in Regulatory Position 1.3.1. As stated in RG 1.183 Regulatory Position 1.3.2, analyses based on TID-14844 generally bound the results of analyses based on AST and TEDE methodology. The complete DBA LOCA and other DBAs specified in Attachment 2 and the original AST application have been revised as part of the ANO-1 AST project.

7. *Integrated radiation exposure of plant equipment should be determined as suggested by RG 1.183 Regulatory Position 1.3.2. Describe any changes made to the ANO-1 radiological assessments associated with equipment qualification based on the application of the AST for ANO-1 using the guidance provided in Appendix I and RG 1.183 Regulatory Position 6.*

   Response:

   Please see Section 2.7 of Attachment 2.

D. ANALYSIS ASSUMPTIONS AND METHODOLOGY

1. *Describe the codes, calculation methods and inputs used to evaluate the dose consequences from the ANO-1 analyzed DBAs as suggested in RG 1.183 Regulatory Position 1.5. State if these codes and calculation methods are part of the licensee's Appendix B, to 10 CFR Part 50, quality assurance program as outlined in RG 1.183 Regulatory Position 5.1.1.*

   Response:

   The analyses were performed by Westinghouse under the Westinghouse Quality Assurance (QA) program and processed at ANO-1 in accordance with the licensee's QA program. Please see Attachment 2, Sections 1.5 and 1.6. Other discussion is found throughout Attachment 2.

2. *In the ANO-1 LOCA analysis, the licensee has taken credit (Attachment 3 Table 6 of the ANO-1 submittal) for sump pH [potential of hydrogen] control. Provide a detailed justification including calculation assumptions for assuming this pH control for the AST dose consequence LOCA analysis (see RG 1.183 Appendix A).*

   Response:

   The ANO-1 reactor building spray (RBS) system includes a sodium hydroxide (NaOH) tank in parallel with the borated water storage tank (BWST). The NaOH tank is designed and located to permit gravity draining at a rate commensurate with the drain rate of the BWST. This design ensures that the proper quantity of NaOH is injected for pH control both during injection and following re-alignment to recirculation from the reactor building sump. Please see SAR Section 6.2 for further description of the ANO-1 RBS system.

3. *Provide a description of the ANO-1 transport assumptions as outlined in Regulatory Position 3 of Appendix A to RG 1.183.*

   Response:

   Please see Section 2.1.2 of Attachment 2.

4. *During power operations, does ANO-1 routinely purge primary containment? If so, describe the affect on the ANO-1 LOCA dose consequence analysis as outlined in Appendix A to RG 1.183.*

   Response:

   Reactor Purge is prevented from being unisolated and placed in service above Mode 5 per the unit TSs. Please see Section 2.1.2 of Attachment 2 for further discussion.

5. *Describe in detail the assumptions and justifications for airborne radioactivity reduction in containment by containment spray systems as outlined in Appendix A to RG 1.183.*

   Response:

   Please see Section 2.1.2 of Attachment 2.

6. *Provide the detail and justification, as outlined in Appendix A to RG 1.183, for the elemental iodine decontamination factor used in the ANO-1 AST LOCA analysis as outlined in Appendix A to RG 1.183.*

   Response:

   Please see Section 2.1.2 of Attachment 2.

7. *Provide the justification for the ANO-1 AST LOCA assumed engineered safety feature (ESF) leakage provided in Attachment 3 Table 6 of the ANO-1 submittal as outlined in Appendix A to RG 1.183.*

   Response:

   Please see Section 2.1.2 of Attachment 2.

8. *Describe the leakage paths and release points related to this assumed ESF leakage in question 7 above.*

   Response:

   Please see Section 2.1.2 of Attachment 2.

9. *Describe in detail how you arrived at the iodine partition coefficient of 0.1 as related to question 7 above.*

   Response:

   Please see Section 2.1.2 of Attachment 2.

10. *Provide the detailed assumptions you used for determining quantity, if any, of ESF leakage back to the Refueling Water Storage Tank and the affect this release path has on the ANO-1 LOCA accident dose consequence analysis as outlined in Regulatory Position 5.2 of Appendix A to RG 1.183.*

    Response:

    Please see Section 2.1.2 of Attachment 2.

11. *Provide the detailed assumptions used for determining all DBA parameters used for the DBAs as outlined in the RG 1.183 appendices of and any other accidents re-evaluated for the proposed AST amendment from the ANO-1 CLB.*

    Response:

    Please see Section 2 of Attachment 2.

12. *Provide details on the timing of events (i.e., manual operations, cool down rates, timing of Steam Generator and control room isolation) associated with all the DBAs analyzed for the ANO-1 AST submittal.*

    Response:

    Please see Sections 1.6.3, 1.6.4, and 2 of Attachment 2.

E. METEOROLOGY ASSUMPTIONS

1. *Regarding the October 22, 2007, alternative source term license amendment request for ANO-1 and the atmospheric dispersion factors (i.e., χ/Q values) used in the dose analyses, Attachment 1 states:*

   "The control room χ/Q values from the calculations previously used for the ANO-2 extended power uprate analyses (already reviewed and approved by the NRC for use on that unit) were used in the new ANO-1 calculations. Attachment 3 provides the updated χ/Q values used in the new ANO-1 analyses."

   a. *For both onsite and offsite χ/Q values previously approved for ANO-1, please provide reference information (e.g., document dates, page or table numbers listing the χ/Q values) documenting approval of the specific values.*

      Response:

      The *onsite* χ/Q values utilized at ANO-1 have not been previously reviewed and approved by the NRC. The *offsite* values are derived directly from the Safety Analysis Report (SAR). Please see Section 1.8 of Attachment 2 for further discussion.

   b. *For any prior ANO-2 approvals now being applied to ANO-1, provide reference information (e.g., document dates, page or table numbers listing the χ/Q values) documenting the approval of the specific values and justify why the χ/Q values are appropriate for use in this license amendment request for ANO-1.*

      Response:

      No prior ANO-2 approvals are being applied to the ANO-1 AST. Please see Section 1.8 of Attachment 2.

   c. *For new or updated χ/Q values which were not already specifically approved, provide the input files (electronic files for data input into computer codes) and a discussion of the assumptions used to generate the χ/Q values, summary output files, and/or cite references where this information has been previously docketed. Include figures, generally drawn to scale showing true north, with all postulated release and intake locations clearly indicated and from which distance, height and direction inputs can be reasonably approximated.*

      Response:

      Please see Section 1.8 and figures provided in Attachment 2, the calculations provided in Attachments 4 and 5, and data files provided on the enclosed CD Rom.

d. *Which χ/Q values were used to model unfiltered inleakage into the control room and why is use of these χ/Q values appropriate?*

Response:

Unfiltered inleakage is assumed to come from the same sources as the control room makeup air. Therefore, the same control room χ/Q's are used for both filtered and unfiltered sources. This is conservative because the calculated χ/Q's are associated with the most direct release-receptor pathways. Additionally, it should be noted that the only unfiltered inleakage found during the ANO tracer gas test in 2001 came through the VSF-9 control room emergency fan housing (downstream of the makeup air filters).

e. *Do the accident scenarios and generated χ/Q values model the limiting doses considering multiple release scenarios including those due to loss of offsite power or other single failures?*

Response:

The accident scenarios and generated χ/Q values do model the limiting doses considering multiple release scenarios including those due to loss of offsite power or other single failures. Please see Attachment 2, Section 2.

F. ADDITIONAL INFORMATION

1. *In order to improve the efficiency and resources expended to complete the NRC staff's review, please provide a RG 1.183 conformance table that outlines the ANO-1 conformance with the specific regulatory positions.*

Response:

Please see Attachment 2, Section 2.

2. *In order to improve the efficiency and resources expended to complete the NRC staff's review, please provide a NRC RIS 2006-04 conformance table.*

Response:

RIS 2006-04 Issue Number	ANO-1 Conformance
1	Please see Attachment 2.
2	Not applicable (applicable to BWRs only)
3	Please see Sections 1.6.3, 1.6.4, and 2 of Attachment 2. No credit is taken for non-ESF ventilation systems. The non-ESF normal control room ventilation system has been assumed to be operating, but without any filtration credit, until control isolation occurs.
4	Please see Section 1.8 of Attachment 2, the calculations provided in Attachments 4 and 5, and data files provided on the enclosed CD Rom
5	Please see Section 2.1.2 of Attachment 2.
6	Please see Attachment 2, Section 2.
7	Please see Section 2.4.2 of Attachment 2.
8	Please see Section 2.2 of Attachment 2.
9	Please see Sections 1.7 and 2 of Attachment 2.
10	Please see Section 1.3 of Attachment 2.
11	ANO-1 is not proposing to implement AST for the Waste Gas Decay Tank Rupture event.
12	Please see Section 2.1.2 of Attachment 2.

3. *Provide for NRC staff review, the ANO-1 proposed final safety analysis report (FSAR) Markup, as suggested by RG 1.183 Regulatory Position 1.5, or revised UFSAR pages outlining the ANO-1 revised AST licensing basis. RG 1.183 Regulatory Position 1.6 outlines the FSAR update requirements including a reference to 10 CFR 50.71.*

Response:

A markup of the ANO-1 SAR is included in Attachment 3.

Attachment 2

To

1CAN040802

Additional Information
Regarding Use of Alternate Source Term

Table of Contents

1.0 Radiological Consequences Utilizing the Alternative Source Term Methodology 3
1.1 Introduction 3
1.2 Evaluation Overview and Objective 3
1.3 Proposed Changes to the Arkansas Nuclear One, Unit 1 Licensing Basis 3
1.4 Compliance with Regulatory Guidelines 4
1.5 Computer Codes 5
1.6 Radiological Evaluation Methodology 5
1.6.1 Analysis Input Assumptions 5
1.6.2 Acceptance Criteria 5
1.6.3 Control Room Ventilation System Description 5
1.6.4 Control Room Dose Calculation Model 6
1.6.5 Direct Shine Dose 7
1.7 Radiation Source Terms 9
1.7.1 Fission Product Inventory 9
1.7.2 Primary Coolant Source Term 9
1.7.3 Secondary Side Coolant Source Term 10
1.7.4 LOCA/Fuel Failure Source Term 10
1.7.5 Fuel Handling Accident Source Term 11
1.8 Atmospheric Dispersion (X/Q) Factors 12
1.8.1 Onsite X/Q Determination 12
1.8.2 Offsite X/Q Determination 16
1.8.3 Meteorological Data 16

2.0 Radiological Consequences -Event Analyses 17
2.1 Loss of Coolant Accident (LOCA) 17
2.2 Fuel Handling Accident (FHA) 22
2.3 Main Steamline Break (MSLB) 25
2.4 Steam Generator Tube Rupture (SGTR) 28
2.5 Reactor Coolant Pump Shaft Seizure (Locked Rotor) 33
2.6 Control Element Assembly Ejection (CEA) 33
2.7 Environmental Qualification (EQ) 37

3.0 Summary of Results 37

4.0 Conclusion 37

5.0 References 37

Figures and Tables

Figures 1.8.1-1 through 7 Onsite Release-Receptor Location Sketches 40

Table 1.6.3-1 Control Room Ventilation System Parameters 47
Table 1.6.5-1 CR Doses Due to Containment Shine 48
Table 1.6.5-2 Control Room Attenuation Factors 49
Table 1.7.2-1 Primary Coolant Source Term 50
Table 1.7.3-1 Secondary Side Source Term 51
Table 1.7.4-1 Core Isotopic Inventory for LOCA 52
Table 1.7.5-1 Fuel Handling Accident Source Term 53
Table 1.8.1-1 Revised Onsite Atmospheric Dispersion Factors for ANO-1 54
Table 1.8.1-2 Release-Receptor Combination Parameters 56
Table 1.8.2-1 Offsite Atmospheric Dispersion Factors for ANO-1 56
Table 2.1-1 LOCA Input Parameters 57
Table 2.1-2 LOCA Dose Results Summary 59
Table 2.2-1 FHA Input Parameters 60
Table 2.3-1 MSLB Input Parameters 61
Table 2.4-1 SGTR Input Parameters 63
Table 2.4-2 Iodine Equilibrium Appearance Rate 64
Table 2.4-3 SGTR Activity for Accident-Initiated Iodine Spike 64
Table 2.6-1 CREA Input Parameters 65
Table 2.6-2 CREA Steam, Iodine and Alkali Metal Release Rates 66
Table 3-1 ANO-1 Summary of Alternative Source Term Analysis Results 67

1.0 Radiological Consequences Utilizing the Alternative Source Term Methodology

1.1 Introduction

The current Arkansas Nuclear One, Unit 1 (ANO-1), licensing basis for the radiological analyses for accidents discussed in Chapter 14 of the Safety Analysis Report (SAR) is based on methodologies and assumptions that are primarily derived from Technical Information Document (TID)-14844 and other early guidance.

Regulatory Guide (RG) 1.183 provides guidance on application of Alternative Source Terms (AST) in revising the accident source terms used in design basis radiological consequences analyses, as allowed by 10 CFR 50.67. Because of advances made in understanding the timing, magnitude, and chemical form of fission product releases from severe nuclear power plant accidents, 10 CFR 50.67 was issued to allow holders of operating licenses to voluntarily revise the traditional accident source terms used in the design basis accident (DBA) radiological consequence analyses with ASTs.

1.2 Evaluation Overview and Objective

As documented in NEI 99-03 and Generic Letter 2003-01, several nuclear plants performed testing on control room unfiltered air inleakage that demonstrated leakage rates in excess of amounts assumed in the current accident analyses. The AST methodology as established in RG 1.183 is being used to calculate the offsite and control room radiological consequences for ANO-1 to support the control room habitability program by addressing the radiological impact of potential increases in control room unfiltered air inleakage.

The following limiting SAR Chapter 14 accidents are analyzed:

* Loss-of-Coolant Accident (LOCA)
* Fuel Handling Accident (FHA)
* Main Steam Line Break (MSLB)
* Steam Generator Tube Rupture (SGTR)
* Control Rod Ejection Accident (CREA)

Each accident and the specific input and assumptions are described in Section 2.0 of this report. These analyses provide for a bounding allowable control room unfiltered air inleakage of 82 cubic feet per minute (cfm). The use of 82 cfm as a design basis value was established to be above the unfiltered inleakage value determined through testing and analysis consistent with the resolution of issues identified in NEI 99-03 and Generic Letter 2003-01.

1.3 Proposed Changes to the ANO-1 Licensing Basis

Entergy Operations proposes to revise the ANO-1, licensing basis to implement the AST, described in RG 1.183, through reanalysis of the radiological consequences of the SAR Chapter 14 accidents listed in Section 1.2 above. As part of the full implementation of this AST, the following changes are assumed in the analysis:

- The total effective dose equivalent (TEDE) acceptance criterion of 10 CFR 50.67(b)(2) replaces the previous whole body and thyroid dose guidelines of 10 CFR 100.11.
- New onsite (control room) atmospheric dispersion factors are developed.
- Dose conversion factors for inhalation and submersion are from Federal Guidance Reports (FGR) Nos. 11 and 12, respectively.
- Increased values for control room unfiltered air inleakage are assumed.

1.4 Compliance with Regulatory Guidelines

The revised ANO-1 accident analyses addressed in this report follow the guidance provided in RG 1.183.

1.5 Computer Codes

The following computer codes are used in performing the Alternative Source Term analyses:

Computer Code	Version	Reference	Purpose
ARCON-96	1997	5.11	Atmospheric Dispersion Factors
ORIGEN-S	2.0	5.12	Core Fission Product Inventory
SCAP-II	1.0	5.13	Direct Shine Dose Calculations
DORT	3.2	5.14	Control Room Attenuation Factors
BUGLE-96	N/A	5.15	ENDF/B-VI Data Files
RADTRAD	3.0.3	5.16	Radiological Dose Calculations

1.5.1 ARCON-96 - used to calculate relative concentrations (X/Q factors) in plumes from nuclear power plants at control room intakes in the vicinity of the release point using plant meteorological data.

1.5.2 ORIGEN - used for calculating the buildup, decay, and processing of radioactive materials.

1.5.3 SCAP-II - used to analyze shielding and estimate exposure from gamma radiation.

1.5.4 DORT – used to calculate control room attenuation factors.

1.5.5 BUGLE-96 – provides a gamma ray cross-section library.

1.5.6 RADTRAD - estimates the radiological doses at offsite locations and in the control room of nuclear power plants as consequences of postulated accidents. The code considers the timing, physical form (i.e., vapor or aerosol) and chemical species of the radioactive material released into the environment. The dose conversion factors used by RADTRAD are from FGR Nos. 11 and 12.

1.6 Radiological Evaluation Methodology

1.6.1 Analysis Input Assumptions

Common analysis input assumptions include those for the control room ventilation system and dose calculation model (Section 1.6.3), direct shine dose (Section 1.6.5), radiation source terms (Section 1.7), and atmospheric dispersion factors (Section 1.8). Event-specific assumptions are discussed in the event analyses in Section 2.0.

1.6.2 Acceptance Criteria

Offsite and Control Room doses must meet the guidelines of RG 1.183 and requirements of 10 CFR 50.67. The acceptance criteria for specific postulated accidents are provided in Table 6 of RG 1.183.

1.6.3 Control Room Ventilation System Description

The Control Room Emergency Air Conditioning and Air Filtration System is required to assure control room habitability. The overall description of the system is discussed in ANO-1 SAR Section 9.7.2.1. Following a design basis accident the control room is pressurized to maintain a positive pressure differential. Makeup air for pressurization is filtered before entering the control room.

The control room is normally air conditioned by one of two 100 percent capacity air conditioning units. One unit is normally running, with the other in standby status isolated from the system by shutoff dampers. The standby unit is available for manual actuation in the event of failure of the operating unit. Adequate fresh air makeup is supplied via the operating air conditioning unit.

The control room air is continuously monitored for high radiation via redundant monitors located in the inlet ductwork of the control room normal air conditioning system through which outside air is supplied. The control room inlet air radiation monitor system consists of two identical monitor strings each having an auto-ranging digital ratemeter, pre-amplifier, and Beta-Gamma sensitive scintillation detector. These monitors have a minimum detectable level of 1E-5 μCi/cc of Cs-137 with no lead shield. A variable setpoint for the monitor is set slightly above equilibrium background level and alarms are provided for high radiation and circuit failure. The configuration is such that either monitor can isolate the control room on high radiation or circuit failure conditions.

In the event of high radiation, the normal air conditioning system is automatically de-energized and the normal control room ventilation system is completely isolated from both the outside air and the rest of the building within 5 seconds after the detector trip signal is received. The actuation level for high radiation is sufficiently below hazardous radiation levels to minimize operator dose during an accident and is sufficiently above normally experienced background levels to minimize spurious actuations. The control room isolation dampers in the supply and return ductwork are spring loaded such that they fail closed upon loss of air or power.

The single supply and single return isolation dampers are each actuated by either of two solenoid valves. Under these conditions control room air is recirculated by the automatically-actuated emergency air filtering system. The emergency air filtering system consists of two

redundant filter trains, VSF-9 and 2VSF-9. Due to space limitations, the two trains are designed differently. One filter train (2VSF-9) consists of a fan, roughing filters, HEPA filters, and a 4-inch deep bed charcoal adsorber rated for 2000 cfm. The other train (VSF-9) consists of a fan, one filter unit assembly rated for 2000 cfm with an outside air filter unit rated for 333 cfm, each with the necessary roughing filters, HEPA filters and 2-inch charcoal tray adsorber. Both VSF-9 and 2VSF-9 were originally designed to provide ~333 cfm outside air to minimize unfiltered air inleakage to the combined control room envelope, which was in turn based upon providing greater than or equal to 0.5 volume changes per hour based upon Standard Review Plan 6.4, Rev.2. However, the actual outside air drawn by 2VSF-9 is ~465 cfm, as measured during control room tracer gas testing in November 2001.

Calculations have been performed that indicate that even with the higher 2VSF-9 makeup air flow rate, operation of VSF-9 with 333 cfm makeup air is limiting in terms of control room radiation dose (Reference 26). For either train outside air will be filtered through four inches of charcoal adsorber and the recirculation air will go through at least two inches of charcoal bed. Fan failure is monitored by a flow switch with an indicating light in the Control Room. On an indication of fan failure, the standby unit is manually started.

The control room emergency recirculation system design is based on a minimum of three room air changes per hour for the combined control room volume (Reference 27). The filter banks are sized in accordance with manufacturer's recommendations for maximum efficiency. The control room operator has manual control for selecting fan, filter, and air conditioning unit operations in order to ensure satisfactory control room conditions following an accident. The system is designed to perform its safety functions and maintain a habitable environment in the control room envelope during isolation.

ANO-1 shares a common control room envelope with ANO-2. The net volume of the common envelope serviced by the Control Room Emergency Air Conditioning and Air Filtration System is 40,000 cubic feet.

The habitability systems (air filtration and ventilation equipment with associated instrumentation, controls and radiation monitoring) are capable of performing their functions assuming a single active component failure coincident with a loss of offsite power. Redundant equipment which is essential to safety is powered from separate safety related buses such that loss of one bus does not prevent the Control Room Emergency Air Conditioning and Air Filtration System from fulfilling its safety function.

1.6.4 Control Room Dose Calculation Model

The control room model includes a recirculation filter model along with filtered air intake, unfiltered air inleakage and an exhaust path. System performance, sequence, and timing of operational evolutions associated with the control room ventilation system are discussed below. control room ventilation system parameters assumed in the analyses are provided in Table 1.6.3-1. The dispersion factors for use in modeling the Control Room during each mode of operation are provided in Table 1.8.1-1. Control room occupancy factors and assumed breathing rates are those prescribed in RG 1.183. Figures 1.8.1-1 through 1.8.1-7 provide sketches showing the ANO-1 containment and auxiliary building layout, including the location of potential onsite radiological release points with respect to the control room air intakes. The elevations of release points and intakes used in the control room AST dose assessments are also provided in the figures.

The control room ventilation system contains a filtration system for removal of radioactive iodine and particulate material that may enter the control room during the course of the event. Calculation of the dose to operators in the control room requires modeling of various system configurations and operating evolutions of the control room ventilation system during the course of the accident. The control room model will define two concurrent air intake paths representing the defined control room ventilation system air intake and the unfiltered inleakage into the control room. Outside air can enter the control room through the filtration/ventilation system from either of two ventilation intake locations that are located over 40 feet apart on top of the ANO-1 auxiliary building. Due to their diverse locations, these intakes are assigned different dispersion factors for calculating the concentration of radioactive isotopes in the air drawn in through that intake due to the activity released from various locations on the site during an accident. Unfiltered outside air can also enter the control room directly. Modeling of the control room addresses these factors as they apply to the various release locations for each analyzed event. Details of the control room modeling for each event is described in subsequent event analyses sections.

During normal operation, ANO-1 has a single fan supplying fresh air to the control room envelope. In addition, ANO-2 has a separate control room normal ventilation system containing two air supply fans. Like ANO-1, one ANO-2 fan will be operating during normal plant operation and the other fan will be maintained in standby. Since the two ANO units share a common control room envelope, unfiltered outside air due to operation of one fan on each unit has been considered in the ANO-1 AST analyses. The ANO-1 fans are rated at 13,900 cfm each, while the ANO-2 fans are rated at 21,300 cfm each. The supply air from both units' fans is isolated within 5 seconds of receipt of a high radiation signal from any of the supply duct radiation detectors. Thus, for the ANO-1 AST analyses 35,200 cfm of unfiltered air is conservatively assumed to pass through the control room envelope for 10 seconds following an event.

Isolation of control room normal ventilation also results in actuation of control room emergency ventilation. The control room emergency ventilation system recirculates air within the control room through a filtration system to remove contaminates that have already been drawn into or have leaked into the control room. The flow rate of this recirculation air is 1667 cfm. During the course of the event, fresh, filtered air is added to the control room by the control room emergency ventilation system at a rate of 333 cfm in order to maintain positive pressure and air quality. This filtered intake is assumed to continue throughout the remaining duration of the dose calculation.

The control room model uses the applicable dispersion factors for the worst-case air intake location when assessing the dose due to the normal ventilation supply prior to its isolation, due to the filtered makeup air post-isolation and due to unfiltered inleakage.

1.6.5 Direct Shine Dose

The total control room dose also requires the calculation of direct shine dose contributions from the activities in the primary containment atmosphere and in the radioactive plume in the environment. The direct shine dose contribution from the primary containment atmosphere was calculated for the LOCA event. This 30-day direct shine dose to a person in the control room, considering occupancy, is provided in Table 1.6.5-1.

Direct shine dose due to the radioactive plume in the environment (i.e. the external radioactive cloud that envelops the control room) is considered separately and is calculated directly by RADTRAD for each event. The control room attenuation factors calculated for the primary containment atmosphere direct shine dose are utilized in the RADTRAD external radioactive cloud direct shine dose calculations. These factors are shown in Table 1.6.5-2 and are discussed further below.

Gamma ray dose rates interior to the control room are calculated using the SCAP-II computer code. The SCAP code is based on the point kernel method for calculation of radiation dose in complex source-shield geometries. In this case, the geometry applied in the SCAP calculation includes simulations of the walls and ceiling of the control room as well as of the outer structure of the reactor containment building. The cylindrical portion of the containment is treated as a 116 foot diameter cylindrical shell with a thickness of 3.75 feet of concrete. The height of the cylinder is considered to be 179 feet. The control room is treated as a structure with concrete wall and ceiling thickness of 1.5 feet. The gamma ray source strengths used in the calculations are determined using the ORIGEN-S computer code. Activity releases following the Design Basis Accident (DBA) event are based on the AST scenario defined in NUREG-1465 and RG 1.183. Reactor coolant activity is released during the first 30 seconds after a Loss of Coolant Accident (LOCA) followed by a "gap release" phase during which all of the gap activity (3% of the total core inventory of volatile nuclides) is instantaneously released. In addition, for accidents where long-term fuel cooling or core geometry are not maintained, an additional release of 2% of the inventory of volatile core inventories are considered to be released at a constant rate over a 30 minute gap release phase. Volatile species are considered to be noble gases, halogens, and alkali metals. Following the gap release phase, an in-vessel release phase is considered, which lasts for 1.3 hours. These releases are assumed to be at a constant rate over the release interval.

The analysis also considers removal of some of the containment airborne activity by the containment spray system. The amount of removal is consistent with the LOCA dose analyses described in Section 2.1. The removal in this evaluation is conservatively assumed to take place at several intervals during the spray period at which time overall decontamination factors (DFs) are applied.

Control room attenuation factors are calculated for individual isotopes using the DORT discrete ordinates transport code in one-dimensional slab geometry. For each isotope, the calculations are run using unit source strength and the gamma ray emission spectrum from the ORIGEN nuclear data libraries. The geometry of the control room wall represents the minimum thickness in the structure. All calculations are run using the BUGLE-96 cross-section library which includes a 20 energy group gamma ray cross-section matrix. The ratio of the calculated dose rate near the interior surface of the wall to that at the exterior surface defines the minimum attenuation factor for each isotope.

In Table 1.6.5-1, the instantaneous gamma ray dose rate and integrated gamma ray dose internal to the control room due to activity dispersed within the Unit 1 containment building are provided. The data shown in Table 1.6.5-1 are based on the conservative assumptions of minimum control room wall thickness and an occupancy factor of 1.0 over the 30 day accident duration.

In Table 1.6.5-2, the control room attenuation factors are provided for each of the isotopes considered in the DBA analysis. These factors are based on the gamma ray emission spectrum of each of the individual isotopes and are determined from the ratio of the calculated dose interior to the control room wall to that at the external surface of the wall. As in the case of the direct dose calculation, conservatism is introduced into the attenuation factor determination by using the minimum control room wall thickness in the analysis. These control room attenuation factors are utilized in the RADTRAD analyses when calculating the direct shine dose due to the external radioactive cloud.

1.7 Radiation Source Terms

1.7.1 Fission Product Inventory

The source term data to be used in performing AST analyses for ANO-1 are summarized in the following tables:

- Table 1.7.2-1 – Primary Coolant Source Term
- Table 1.7.3-1 – Secondary Side Source Term
- Table 1.7.4-1 – LOCA/Fuel Failure Source Term
- Table 1.7.5-1 – Fuel Handling Accident Source Term

Note that the source terms provided in the referenced tables do not include any decay before the start of the events. Decay time assumptions are applied in the RADTRAD cases for individual event analysis. For example, the RADTRAD case for the Fuel Handling Accident analysis would account for the required decay time before the movement of fuel is allowed (as determined by Technical Specifications).

1.7.2 Primary Coolant Source Term

The primary coolant source term for ANO-1 is derived from plant chemistry data. Reactor Coolant System (RCS) activity levels for various isotopes were determined from actual plant samples collected at periodic intervals. The plant data readings for each isotope were averaged and adjusted to achieve the proposed, revised Technical Specification limit of 1.0 μCi/gm dose equivalent I-131 (DE I-131), using the Technical Specification definition of DE I-131 and dose conversion factors for individual isotopes from ICRP 30, which are equivalent to the rounded thyroid values from FGR 11 for iodine isotopes. The non-iodine species were adjusted to achieve the Technical Specification limit of 72/E-bar microcuries per gram of gross activity.

The dose conversion factors for inhalation and submersion are from FGR Nos. 11 and 12, respectively. When adjusting the primary coolant isotopic concentrations to achieve Technical Specification limits, the relative concentrations of fission products in the primary coolant system are assumed to remain constant. The final adjusted primary coolant source term is presented in Table 1.7.2-1, "Primary Coolant Source Term."

1.7.3 Secondary Side Coolant Source Term

Secondary coolant system activity is limited to the proposed, revised Technical Specification limit of 0.10 μCi/gm DE I-131. Noble gases entering the secondary coolant system are assumed to be immediately released; that is, the noble gas activity concentration in the secondary coolant system is assumed to be 0.0 μCi/gm. Thus, the secondary side iodine activity is 1/10 of the activity given in Table 1.7.2-1.

The secondary side source term is presented in Table 1.7.3-1, "Secondary Side Source Term (non-LOCA)."

1.7.4 LOCA/Fuel Failure Source Term

Per Section 3.1 of Reg. Guide 1.183, the inventory of fission products in the ANO-1 reactor core available for release to the containment are based on the maximum full power operation of the core and the current licensed values for fuel enrichment and fuel burnup. The period of irradiation is selected to be of sufficient duration to allow the activity of dose-significant radionuclides to reach equilibrium or to reach maximum values.

The ANO-1 reactor core consists of 177 fuel assemblies. The full core isotopic inventory is determined in accordance with RG 1.183, Regulatory Position 3.1, using the ORIGEN-S isotope generation and depletion computer code to develop the isotopics for the specified burnup, enrichment, and burnup rate (power level).

The assembly source term is based on 102% of rated (licensed) thermal power (2568 MWth x 1.02 = 2619.36 MWt). For non-LOCA events with fuel failures, a bounding radial peaking factor of 1.8 is then applied to conservatively simulate the effect of power level differences across the core that might affect the localized fuel failures for assemblies containing the peak fission product inventory.

The core inventory release fractions for the gap release and early in-vessel damage phases for the design basis LOCAs were obtained from RG 1.183, Regulatory Position 3.2, Table 2, "PWR Core Inventory Fraction Released into Containment." RG 1.183, Regulatory Position 3.2, Table 3, "Non-LOCA Fraction of Fission Product Inventory in Gap" was not completely utilized, or needed, for the ANO-1 AST analyses. The only non-LOCA events at ANO-1 that result in fuel damage are the Fuel Handling Accident (FHA) and the Control Rod Ejection Accident (CREA). The FHA used RG 1.25 gap fractions per NUREG/CR-5009. These fractions, listed in Table 2.2-1, are equal to or greater than the fractions listed in Table 3 of RG 1.183. The CREA used the gap fractions identified in RG 1.183, Appendix H, which are larger than those listed in Table 3 for noble gases and iodines. However, the RG 1.183 Table 3 gap fraction for alkali metals was added for the CREA analysis. The CREA gap fractions are identified in Table 2.6-1.

The specific parameters used in the ORIGEN-S calculations are listed below:

Core Thermal Power	2619.36 MWt
Cycle Operating Time	548 EFPD
Cycle Burnup (BU)	20,350 MWD/MTU
Number of Fuel Assemblies	177
Uranium Loading per Assembly	0.4637 MTU/Assembly
Total Core Loading	82.07 MTU

Fuel Region	No. of Assemblies	Average Enrichment	Region Loading (MTU)	MTU per Assembly	grams/assembly	
					U-235 g	U-238 g
Twice burned	60	4.1	27.82	0.4637	19011.7	444688.3
Once burned	60	4.1	27.82	0.4637	19011.7	444688.3
Feed batch	57	4.1	26.43	0.4637	19011.7	444688.3
Fuel Region	**Cycle BU (MWD/MTU)**	**MW per Assembly**				
Twice burned	1.320	19.536				
Once burned	1.101	16.295				
Feed batch	0.557	8.244				

A conservative maximum fuel assembly uranium loading has been applied to all 177 fuel assemblies in the core and radioactive decay of fission products during refueling outages has been conservatively ignored. In addition, in order to address the potential variability of these input parameters for future fuel cycles, an additional 4% margin is added to the calculated values for use in the AST analyses. The final results including this additional margin term are provided in Table 1.7.4-1, "LOCA Containment Leakage Source Term."

1.7.5 Fuel Handling Accident Source Term

The fuel handling accident for ANO-1 results in damage to 82 fuel rods (six rows of rods in one assembly), as reported in ANO-1 SAR Section 14.2.2.3.3.

Per Section 3.1 of Reg. Guide 1.183, the source term methodology for the FHA is similar to that used for developing the LOCA source term, except that for DBA events that do not involve the entire core, the fission product inventory of each of the damaged fuel rods is determined by dividing the total core inventory by the number of fuel rods in the core. To account for differences in power level across the core, the ANO-1 design radial peaking factor of 1.8 is applied in determining the inventory of the damaged rods. Thus, based on the methodology specified in Reg. Guide 1.183, the fuel handling accident source term is derived by applying a factor of 1.8/(177x208) to the LOCA source term, then multiplying by the total number of fuel rods that are damaged during the event. The ANO-1 core has 177 fuel assemblies, each containing 208 fuel rods. As discussed in Section 2.2 and consistent with ANO-1 SAR Section 14.2.2.3, 82 fuel rods are assumed to be damaged in a FHA. For the ANO-1 FHA analysis, the RADTRAD release fraction timing files (*.rtf) are actually used to properly adjust the FHA source term.

The FHA source term is presented in Table 1.7.5-1, "Fuel Handling Accident Source Term." This table identifies the isotopes considered in the ANO-1 FHA analysis and the total core source term at time of reactor shutdown, i.e. LOCA source term values. These values are then adjusted by the RADTRAD *.rtf files as discussed in the previous paragraph.

1.8 Atmospheric Dispersion (X/Q) Factors

1.8.1 Onsite X/Q Determination

New X/Q factors for onsite release-receptor combinations were developed using the ARCON-96 computer code (reference 5.11). Development of these new factors was necessary because the current ANO-1 licensing and design basis contains only one onsite X/Q, that being associated with a release from containment during a LOCA. Different combinations are considered in order to provide the limiting release-receptor combination for the various events. Releases may occur from containment (LOCA, CREA and FHA), the Main Steam Safety Valves (Steam Generator Tube Rupture – SGTR), the Atmospheric Dump Valves (Main Steam Line Break – MSLB, SGTR and CREA), the penetration room ventilation system (PRVS) exhaust (LOCA) and the fuel handling area ventilation (FHA). Each of these release points is considered below.

The calculation of the new ANO-1 X/Q factors was completed in February 2002. The calculations included new onsite X/Q factors for ANO-2 as well and was completed to support new power uprate and steam generator replacement dose calculations for ANO-2. Thus, the calculation of the new onsite ANO-1 X/Q factors used the same methodology and the same meteorological data as was used in calculating the currently approved onsite ANO-2 X/Q factors. Since ANO-1 and ANO-2 share a common control room envelope and common emergency ventilation of that envelope, the receptor locations for ANO-1 are the same as those for ANO-2 and only the release points differ. Information regarding the ANO-2 dose calculations was submitted to the NRC in references 5.19 and 5.20 to support that unit's power uprate amendment request and the ANO-2 power uprate license amendment was subsequently granted by the NRC in Amendment 244 in April 2002.

Figures 1.8.1-1 through 1.8.1-7 provide sketches of the general layout of ANO-1. These figures highlight the possible release and receptor point locations. All releases are taken as ground releases consistent with the guidance provided in RG 1.145, "Atmospheric Dispersion Models for Potential Accident Consequence Assessments at Nuclear Power Plants," Rev. 1, February 1983.

In the course of this calculation, several conservative assumptions were made about the operation of the control room emergency ventilation systems and the position of the leakage. These assumptions are described in detail below.

The intake penthouse VPH-1 is centered approximately 10' 3¾" west of the auxiliary building support column designator "5.9" and 79' 7½" south of the auxiliary building support column designator "A". The base of VPH-1 has an elevation of 447' $10^{15}/_{16}$".

The intake penthouse VPH-2 is centered approximately 10' $3^{3}/_{4}$" west of the auxiliary building support column designator "5.9" and 13' 6" south of the auxiliary building support column designator "E". The base of VPH-2 has an elevation of 448' 0".

During a MSLB accident, it is postulated that steam will be released with such force that the normal ventilation system will not be capable to control the release. It is therefore assumed that the walls and/or roof of the steam pipe area (Room 170) will be blown away and allow direct release of all effluents to the environment. This is the worst possible scenario. It is unlikely that all the walls and roof will be completely removed, but it is possible that they will be dislodged

from their fastened position. Since the path of the release is from the steam line to the room and then to the environment through the walls and/or roof, the source is conservatively modeled as a horizontal vent release with zero vertical velocity.

The stability index for meteorological data is calculated using the methods that are discussed in Reference 24.

The MSSVs are postulated to release steam in several accident scenarios. Depending on the accident conditions, as few as two or as many as all sixteen Main Steam Safety Valves (MSSVs) may release steam. To determine X/Q values that would be conservative for use in all cases, instead of a diffuse release from sixteen valves, it is assumed that the release is from the valve with the lowest pressure setpoint that is closest to the control room intakes.

The Atmospheric Dump Valves (ADVs) are manually controlled by the operators to effect a plant cooldown following various accident scenarios. The exhaust flow rate varies depending on the steam line pressure. As with the MSSVs, it is assumed that any ADV release is from the valve closest to the control room intakes.

Ground level is 354' 0". Furthermore, the height of the containment is taken as the elevation of the parapet, which is 533' 6".

Site-specific meteorological (MET) data are obtained from the meteorological tower, which is located approximately 0.51 mile due east of the Unit 1 containment building at an elevation of 360 feet above sea level. The tower collects data at 10 and 57 meters above ground level.

ARCON-96 requires several data to accurately calculate X/Qs. The first of these is the MET data itself, which were obtained from January 1995 to December 1999 and include wind speed and direction for both the 10- and 57-meter heights. A stability index ranging from 1 to 7 that identifies the apparent atmospheric turbulence for each hour of the day over the stated period is also required and was calculated per Assumption 4 above.

The receptor for all cases considered is one of the emergency ventilation control room intakes, VPH-1 or VPH-2. The configuration of each emergency ventilation system intake in relation to the potential points of release is shown in Figures 1.8.1-1 through 1.8.1-6. Information regarding calculation of the X/Q for each configuration follows.

Release from the Atmospheric Dump Valves

The ADVs release steam directly to the atmosphere via exhaust pipes that are located on the auxiliary building as is shown in Figure 1.8.1-1. The ADVs are uncapped exhausts that vent directly to the auxiliary building roof. The ADV vents are angled approximately 22.5° from the vertical. The vent height is ~32.61 meters above ground level. Since the release from these two stacks is dependent on which secondary loop is damaged, the worst-case release point is used. This turns out to be a release from the ADV downstream of steam generator (SG) A, which is CV-2668.

VPH-1 is 28.62 meters above ground level and is located at a distance of 33.51 meters from CV-2668. The direction to the source is approximately 212° relative to North (0°).

VPH-2 is 28.65 meters above ground level and is located at a distance of 23.67 meters from CV-2668. The direction to the source is 229°.

Release from the Main Steam Safety Valves

There are sixteen MSSVs that are designed to relieve pressure in the event of an over-pressurization of the secondary system. Eight MSSVs are associated with each steam generator. They are located on the ANO-1 auxiliary building roof near the containment building as is depicted in Figures 1.8.1-2 and 1.8.1-3. Like the ADVs, the MSSVs are uncapped exhausts that vent directly to the auxiliary building roof. Typically, the release of effluents is even more violent than with the ADVs since the MSSVs release steam only on high pressurization. However, thermal and momentum plume height additions are neglected for conservatism. The MSSVs are located at a height of 30.78 meters above ground level.

The MSSVs are postulated to release steam in several accident scenarios. Depending on the accident conditions, as few as two or as many as all sixteen MSSVs may release steam. To determine X/Q values that would be conservative for use in all cases, the minimum vertical velocity and vent area was used. Therefore instead of a diffuse release from sixteen valves, it is assumed that the release is from the closest MSSV with the lowest pressure setpoint. Thus the source is assumed to be located at PSV-2699.

The effective distance between the source and VPH-1 is then approximately 20.62 meters and is in the direction 228°.

The distance between the source and VPH-2 is 15.26 meters and is in the direction 266°.

Release from a Main Steam Pipe

A MSLB outside containment on ANO-1 is assumed to be a double-ended guillotine break that releases steam directly to the environment. It is assumed that the south and east walls and the roof of Room 170 will be blown away during a MSLB leaving large holes in their place. This room adjoins the fuel handling area (Room 159) on the north side and the Unit 1 containment on the west side but is otherwise unprotected from the environment should its walls and roof fail.

Figure 1.8.1-4 shows the location of this room in relation to the control room emergency ventilation intake structures, and Figure 1.8.1-5 gives the details of the walls that are assumed to be destroyed. Since this release may occur at virtually any point in this room, the release is assumed to be from the center of the nearest wall, which is the east wall. The vertical height then of this release is 19.58 meters above ground level. Since the path of the release is from the steam line to the room and then to the environment through the walls and/or roof, the source is conservatively modeled as a horizontal vent release with zero vertical velocity.

The horizontal distance between the nearest Room 170 wall and VPH-1 is 35.01 meters and the direction from VPH-1 is 206°.

VPH-2 is at a distance of 24.17 meters from the nearest wall of Room 170. The relative direction towards the source from VPH-2 is 219°.

Release from the Fuel Handling Area Ventilation System

The spent fuel pool and fuel handling area are ventilated by two parallel fans (VEF-14A and VEF-14B), which are mounted on the roof of the ANO-1 auxiliary building. These fans exhaust out a duct that is mounted on the ANO-1 containment wall. Effluents are directed to containment azimuthal location 120° where they are released at elevation 533' 6" at the top of the reactor building. The fuel handling area flute release height is thus 54.53 meters. This arrangement is shown in Figure 1.8.1-6.

The fuel handling area exhaust duct is located horizontally 32.52 meters from VPH-1 and at a relative direction of 218°.

VPH-2 is 23.77 meters from the fuel handling area exhaust duct. The relative direction to the duct is 237°.

Release from Penetration Room Ventilation System Exhaust

The PRVS filters and releases postulated post-LOCA leakage through two parallel fans (VEF-38A and VEF-38B). The fans exhaust through a pipe that runs up the outside of the containment wall as shown in Figure 1.8.1-7. The pipe is a hooked vent with no vertical velocity. The release height is 55.63 meters, at elevation 536'6".

The PRVS exhaust outlet is located horizontally 19.61 meters from VPH-1 and at a relative direction of 258°.

VPH-2 is 21.09 meters from the PRVS exhaust outlet. The relative direction from VPH-2 to the outlet is 295°.

Release from Containment

In contrast to the other potential radiological release points, the containment release location is not precisely known. Because the source may actually be composed of many release locations, it is conservatively assumed that the release occurs at the shortest horizontal distance between the containment building surface and the control room intake. For the receptor-to-source direction, the direction from the control room intake to the center of the containment is used.

The containment is located horizontally 20.91 meters from VPH-1 and at a relative direction of 246°.

VPH-2 is 17.6 meters from the containment. The relative direction from VPH-2 to the building center is 264°.

As previously stated, the ground level release type was used for all ANO-1 X/Q assessments. Vertical velocity, stack radius and stack flow are not required for ground level release evaluations.

The only building that may affect wind diffusion is the containment, which has a cross-sectional area of 2205 m^2. This area is the licensing basis for ANO-1 and was used to calculate the offsite dose X/Q values. This value is slightly conservative with respect to the calculated cross-

sectional area and therefore has been used in the ANO-1 onsite X/Q calculations. This area corresponds to the projected area of the outer surface of the reactor building and is effectively the area that is seen by a wind projecting on it from any given direction.

Table 1.8.1-1, "Revised Onsite Atmospheric Dispersion Factors for ANO-1," provides the new ANO-1 onsite X/Q factors for the release-receptor combinations discussed above. These factors are not corrected for occupancy. This table summarizes the X/Q factors for the control room intakes and therefore provides the factors that were used for the ANO-1 AST control room dose analyses. The dose calculations use the worst-case X/Q factor for the applicable release point at each time step.

Table 1.8.1-2, "Release-Receptor Combination Parameters," provides information related to the relative elevations of the release-receptor combinations, the straight-line horizontal distance between the release point and the receptor location, and the direction (azimuth) from the receptor location to the release point (relative to true north).

1.8.2 Offsite X/Q Determination

New ANO-1 offsite atmospheric dispersion factors have not been utilized. The ANO-1 AST dose calculations continue to use the current licensing basis offsite X/Q factors. The factors for the Exclusion Area Boundary (EAB) and Low Population Zone (LPZ) are presented in Table 1.8.2-1, "Offsite Atmospheric Dispersion Factors for ANO-1." The 0-2 hour EAB atmospheric dispersion factor is applied to all time periods in the analyses.

1.8.3 Meteorological Data

As discussed above, meteorological data over a five-year period (January 1995 through December 1999) were used in the development of the new onsite X/Q factors used in the AST analyses. The ANO meteorological program complies with RG 1.23, "Onsite Meteorological Programs," with few exceptions, as discussed in Section 1.3.3 of the ANO-2 SAR. The onsite meteorological program itself is described in Section 2.3 of the ANO-2 SAR.

ARCON-96 analyzes the meteorological data file used and lists the total number of hours of data processed and the number of hours of missing data in the case output. A meteorological data recovery rate may be determined from this information. Since all of the cases use the same meteorological data files, all of the cases in this analysis have the same data recovery rate. The ARCON-96 files present the number of hours of data processed as 43,824 and the number of missing data hours as 793. This yields a meteorological data recovery rate of 98.2%. No regulatory guidance is provided in Reg. Guide 1.194 and NUREG/CR-6331 on the valid meteorological data recovery rate required for use in determining onsite X/Q values. However, Regulatory Position C.5 of RG 1.23 requires a 90% data recovery threshold for measuring and capturing meteorological data. The 98.2% valid meteorological data rate for the cases in this analysis exceeds the 90% data recovery limit set forth by RG 1.23. With a data recovery rate of 98.2% and a total of five years worth of data, the contents of the meteorological data files are representative of the long-term meteorological trends at the ANO site.

2.0 Radiological Consequences - Event Analyses

2.1 Loss of Coolant Accident (LOCA)

2.1.1 Background

This event is assumed to be caused by an abrupt failure of a main reactor coolant pipe and the Emergency Core Cooling System (ECCS) fails to prevent the core from experiencing significant degradation. This sequence cannot occur unless there are multiple failures and thus goes beyond the typical design basis accident that considers a single active failure. Activity is released into the containment and then to the environment by means of containment leakage and leakage from the ECCS. This event is described in the Section 14.2.2.5 of the ANO-1 SAR.

2.1.2 Compliance with RG 1.183 Regulatory Positions

The revised LOCA dose consequence analysis is consistent with the guidance provided in RG 1.183, Appendix A, "Assumptions for Evaluating the Radiological Consequences of a LWR Loss-of-Coolant Accident," as discussed below:

1. Regulatory Position 1 – The total core inventory of the radionuclide groups utilized for determining the source term for this event is based on RG 1.183, Regulatory Position 3.1, at 102% of core thermal power and is provided in Table 1.7.4-1. The core inventory release fractions for the gap release and early in-vessel damage phases of the LOCA are consistent with Regulatory Position 3.2 and Table 2 of RG 1.183.

2. Regulatory Position 2 – Per SAR Section 6.2.2.1, the sodium hydroxide tank is designed and located to permit gravity draining into the system at a rate commensurate with the draining rate of the BWST. The contents of the tank are proportioned so that the proper quantity of sodium hydroxide is injected for pH control. Flow orifices in the discharge lines from the sodium hydroxide tank assist in assuring the proper injection rate. The sodium hydroxide raises the pH of the borated water into the alkaline range. This design ensures that both the spray injection flow and the long term recirculation sump pH remain greater than 7.0. Therefore, the chemical form of the radioiodine released to the containment is assumed to be 95% cesium iodide (CsI), 4.85% elemental iodine, and 0.15% organic iodine. With the exception of elemental and organic iodine and noble gases, fission products are assumed to be in particulate form.

3. Regulatory Position 3.1 – The activity released from the fuel is assumed to mix instantaneously and homogeneously throughout the free air volume of the containment. The release into the containment is assumed to terminate at the end of the early in-vessel phase.

4. Regulatory Position 3.2 – Reduction of the airborne radioactivity in the containment by natural deposition is not credited.

5. Regulatory Position 3.3 – Reduction in airborne radioactivity by containment spray is credited. Containment spray provides coverage to 89% of the containment. Therefore, the ANO-1 containment building atmosphere is not considered to be a single, well-mixed volume. A mixing rate of 6270 cfm is assumed. This mixing rate is less than the two turnovers per hour of the unsprayed region that is allowed.

Consistent with RG 1.183 and the SRP, the elemental iodine spray removal coefficient is set to zero when a decontamination factor (DF) of 200 for elemental iodine is achieved at 3.1 hours. Likewise, the particulate spray removal coefficient is reduced by a factor of 10 when a DF of 50 is achieved for the aerosol at 3.3 hours. Although no maximum DF limit is defined for particulate iodine removal, a DF limit of 1000 is used. Thus, spray removal of particulates is terminated when a DF of 1000 is achieved at 16.5 hours. Containment spray is conservatively assumed to actuate at 300 seconds.

6. Regulatory Position 3.4 – Reduction in airborne radioactivity in the containment by filter recirculation systems is not assumed in this analysis.

7. Regulatory Position 3.5 – This position relates to suppression pool scrubbing in BWRs, which is not applicable to ANO-1.

8. Regulatory Position 3.6 – This position relates to activity retention in ice condensers, which is not applicable to ANO-1.

9. Regulatory Position 3.7 – A containment leak rate of 0.2% per day of the containment air is assumed for the first 24 hours, consistent with the ANO-1 Technical Specification maximum allowable leak rate. After 24 hours, the containment leak rate is reduced to 0.1% per day of the containment air.

10. Regulatory Position 3.8 – This position relates to routine containment purging during power operations, which is not applicable to ANO-1.

11. Regulatory Position 4.1 – The entire Section 4 pertains to a dual containment which is not applicable to ANO-1. However, ANO-1 does have penetration rooms adjacent to the containment into which 50% of the containment leakage is assumed to leak. These rooms are serviced by a safety-related PRVS. Therefore, the following discussions of the Section 4 regulatory positions are with respect to the penetration rooms and the PRVS. Leakage from containment collected by the PRVS is processed by engineered safeguards filters prior to release.

12. Regulatory Position 4.2 – The PRVS is designed to be in full operation in less than 55 seconds following receipt of a reactor building (containment) isolation signal. Since the onset of the gap release is not assumed until 30 seconds following a LOCA and the release must then take a tortuous path from the fuel gap to and through the containment wall, the PRVS is assumed to be in operation well before any containment leakage reaches the penetration rooms. Even if some containment leakage does reach a penetration room prior to achieving full PRVS fan flow, it would be held up in the room until sufficient PRVS flow is established. Therefore, no containment leakage into the penetration rooms is assumed to be released directly to the environment without filtration.

13. Regulatory Position 4.3 – PRVS is credited as being capable of maintaining the penetration rooms at a negative pressure with respect to the outside environment throughout the event as described in SAR Section 6.5.

14. Regulatory Position 4.4 – No credit is taken for dilution in the penetration room volume.

15. Regulatory Position 4.5 – 50% of the primary containment leakage is assumed to be released directly to the environment as a ground level release without credit for any filtration.

16. Regulatory Position 4.6 – The PRVS is credited as meeting the requirements of RG 1.52 and Generic Letter 99-02. The filters in the PRVS ventilation system are credited at 99% efficiency for particulates and 90% for both elemental and organic iodine.

17. Regulatory Position 5.1 – Emergency Safeguards Features (ESF) systems that recirculate water outside the primary containment are assumed to leak during their intended operation. With the exception of noble gases, all fission products released from the fuel to the containment are assumed to instantaneously and homogeneously mix in the containment sump water at the time of release from the core.

18. Regulatory Position 5.2 – The reactor building spray and low pressure injection pumps are located in sealed rooms of the auxiliary building through which air does not circulate. Therefore, iodine leaking from these pumps is not exhausted to the environment. These are the only pumps that recirculate sump water following any LOCA of sufficient size to result in fuel damage. See ANO-1 SAR Section 14.2.2.6. A flow path does exist from these pumps through the penetration rooms and back into containment. Leakage from this flow path outside the sealed rooms is evaluated for its dose impact. No credit for filtration of this leakage by the PRVS is taken. This leakage is assumed to be 782 cc/hr, which is two times the leakage limit of 391 cc/hr identified in SAR Table 14-52. The leakage is assumed to start at the time recirculation flow occurs in these systems and continue for the 30-day duration. The ECCS pumps do not have miniflow returns to the borated (refueling) water storage tank (BWST) and there is no viable means of leakage of sump fluid to the BWST. There is a single, common return line from the ECCS pump discharge lines to the BWST, but failure of redundant, closed and manually-operated valves would be required in order for any sump fluid to get into the BWST.

19. Regulatory Position 5.3 – With the exception of iodine, all radioactive materials in the recirculating fluid are assumed to be retained in the liquid phase.

20. Regulatory Position 5.4 – A flashing fraction of 4.58% was calculated based upon the sump temperature at the time of recirculation. However, the flashing fraction used in the analysis is limited based on Regulatory Position 5.5.

21. Regulatory Position 5.5 – Since the calculated flashing fraction is less than 10% (see previous item), the amount of iodine that becomes airborne is conservatively assumed to be 10% of the total iodine activity in the leaked fluid.

22. Regulatory Position 5.6 – For ECCS leakage into the auxiliary building, the form of the released iodine is 97% elemental and 3% organic. No reduction in release activity by dilution or holdup within buildings, or by any ventilation system, is credited.

23. Regulatory Position 6 – This position relates to MSSV leakage in Boiling Water Reactors (BWRs), which is not applicable to ANO-1.

24. Regulatory Position 7 – Containment purge is not a combustible gas or pressure control measure for ANO-1.

2.1.3 Methodology

For the purposes of the LOCA analyses, a major LOCA is defined as a rupture of the RCS piping, including the double-ended rupture of the largest piping in the RCS, or of any line connected to the RCS up to the first closed valve, that results in fuel failure. Should a major break occur, the RCS will depressurize resulting in a reactor trip signal when the RCS low-pressure trip setpoint is reached. Safety-injection will be subsequently actuated when the appropriate setpoint is reached. The following measures will limit the consequences of the accident in two ways:

1. Reactor trip and borated water injection complement void formation in causing rapid reduction of power to a residual level corresponding to fission product decay heat, and

2. Injection of borated water provides heat transfer from the core and prevents excessive cladding temperatures.

Release Inputs

The core inventory of the radionuclide groups utilized for this event is based on RG 1.183, Regulatory Position 3.1, at 102% of core thermal power and is provided as Table 1.7.4-1. The source term assumes enveloping initial fuel enrichment and an average core burnup of 41,045 MWD/MTU.

From Technical Specification 5.5.16, the initial leakage rate from containment is 0.2% of the containment air per day. Per RG 1.183, Regulatory Position 3.7, the primary containment leakage rate is reduced by 50% at 24 hours into the LOCA to 0.1%/day based on the post-LOCA primary containment pressure history. This leakage is split evenly between a direct release to the environment and a release to the penetration rooms where it is filtered prior to release to the environment.

The ESF leakage to the auxiliary building is assumed to be 782 cc/hr based upon two times the current licensing basis value of 391 cc/hr. The leakage is conservatively assumed to start at the time of switch to recirculation and continue throughout the 30-day period. This portion of the analysis assumes that 10% of the total iodine is released from the leaked fluid. The form of the released iodine is 97% elemental and 3% organic. Dilution and holdup of the ECCS leakage in the auxiliary building are not credited.

Transport Inputs

Fifty percent of the containment leakage is assumed to be released directly to the environment as a ground level release. The remaining 50% of the containment leakage is assumed to be released into the penetration rooms where it is collected by the PRVS and discharged to the environment as a filtered, ground level release. The PRVS filters are assumed to have an efficiency of 99% for particulates and 90% for both elemental and organic iodine. ECCS leakage into the auxiliary building outside of sealed rooms is modeled as an unfiltered, ground level release. The onsite X/Q factors associated with a release from the PRVS exhaust is conservatively applied to all LOCA releases.

For this event, the control room ventilation system cycles through two modes of operation: normal and emergency. Initially, the ventilation system is assumed to be operating in its normal mode supplying 35,200 cfm of unfiltered, fresh, outside air.

After the start of the event, the control room is assumed to be isolated due to a high radiation signal. This signal may be initiated due to containment shine, shine from the approaching radioactive cloud or actual initial entry of radioactive material into the normal ventilation ductwork. A loss of offsite power would also initiate control room isolation. Control room isolation is designed to occur within 5 seconds, but a 10-second delay is assumed in the analysis. During isolation of normal control room ventilation, the control room emergency ventilation system (CREVS) automatically starts up and pressurizes the control room. After isolation of normal control room ventilation, 333 cfm of filtered, outside makeup air is assumed to be supplied by the CREVS. CREVS is also assumed to recirculate and filter 1667 cfm of control room air.

The CREVS filter efficiencies that are applied to the filtered makeup air are 99% for particulate, elemental iodine, and organic iodine and to the recirculation flow are 99% for particulate and 95% for elemental iodine and organic iodine.

LOCA Removal Inputs

Containment spray provides coverage to 89% of the containment. Therefore, the ANO-1 reactor building atmosphere is not considered to be a single, well-mixed volume. A mixing rate 6270 cfm between the sprayed and unsprayed containment volumes is assumed. This mixing rate is less than the two turnovers per hour of the unsprayed region that is allowed by RG 1.183.

The elemental spray coefficient is initially assumed to be 20 hr^{-1} (limit per SRP 6.5.2), but is conservatively further reduced to 10 hr^{-1} at the start of sump recirculation. This coefficient is then reduced to 0 when an elemental decontamination factor (DF) of 200 is reached. Based upon the assumed elemental iodine removal rates, the DF of 200 is conservatively computed to occur at 3.1 hours.

The particulate iodine removal rate is reduced by a factor of 10 when a DF of 50 is reached. Based upon the calculated iodine aerosol removal rate of 2.6 hr^{-1}, the DF of 50 is conservatively computed to occur at 3.3 hours. The particulate iodine removal rate is reduced to 0 when a DF of 1000 is reached at 16.5 hours.

2.1.5 Radiological Consequences

The control room atmospheric dispersion factors (X/Qs) used for this event are based on postulated releases from the PRVS exhaust. The X/Q factors associated with this release point are the worst-case factors for the LOCA release locations. In addition, the LOCA X/Q input table was created by choosing the worst-case factor for each time interval.

The EAB and LPZ dose consequences are determined using the X/Q factors provided in Table 1.8.2-1 for the appropriate time intervals. These factors are taken from the current ANO-1 licensing basis as reported in SAR Table 14-49.

The radiological consequences of the design basis LOCA are analyzed using the RADTRAD code and the inputs/assumptions previously discussed. In addition, the SCAP-II code is used to calculate direct shine doses to control room personnel due to the activity in the primary containment atmosphere.

The post accident doses are the result of three distinct activity releases:

1. Containment leakage directly to atmosphere.
2. Containment leakage via the penetration rooms.
3. ESF system leakage into the auxiliary building.

The dose to the Control Room occupants includes terms for:

1. Contamination of the control room atmosphere by intake and infiltration of radioactive material from the containment and ECCS leakage.
2. External radioactive plume shine contribution from the containment and ECCS leakage releases. This term takes credit for control room structural shielding.
3. A direct shine dose contribution from the activity contained in the containment. This term takes credit for both containment and control room structural shielding.

As shown in Table 2.1-4, the sum of the results of all dose contributions for EAB dose, LPZ dose and control room dose are all within the appropriate regulatory acceptance criteria.

2.2 Fuel Handling Accident (FHA)

2.2.1 Background

This event consists of the drop of a single fuel assembly either in the fuel handling area or inside containment. The FHA is described in Section 14.2.2.3 of the ANO-1 SAR, which specifies that six rows of fuel rods (82 total) in a single fuel assembly are damaged during the event.

This analysis considers both a dropped fuel assembly inside the containment with the equipment hatch open and an assembly drop in the fuel handling area. In both cases, the release is assumed to occur directly to the environment without filtration. The source term released from the overlying water pool is the same for both the fuel handling area and the containment. RG 1.183 imposes the same 2-hour criteria for the direct unfiltered release of the activity to the environment for either location. Since the containment release X/Q is more limiting than the fuel handling area release X/Q, only the dropped fuel assembly inside the containment case is actually analyzed. The results of that case are then bounding for the assembly drop in the fuel handling area case.

A minimum water level of 23 feet is maintained above the damaged fuel assembly for both the containment and fuel handling area release locations.

2.2.2 Compliance with RG 1.183 Regulatory Positions

The FHA dose consequence analysis is consistent with the guidance provided in RG 1.183 Appendix B, "Assumptions for Evaluating the Radiological Consequences of a Fuel Handling Accident," as discussed below:

1. Regulatory Position 1.1 – The amount of fuel damage is assumed to be 82 fuel rods in a single fuel assembly per SAR Section 14.2.2.3.

2. Regulatory Position 1.2 – The fission product release from the breached fuel is based on Regulatory Positions 3.1 and 3.2 of RG 1.183. Section 1.7 provides a discussion of how the FHA source term is developed. A listing of the FHA source term is provided in Table 1.7.5-1. The gap fractions available for release are obtained from RG 1.25 and modified for I-131 per NUREG/CR-5009. These fractions are shown in Table 2.2-1 and are conservative with respect to the fractions specified by Table 3 of RG 1.183 for all groups except the alkali metals. However, the alkali metals are assumed to be in a non-volatile form and are therefore retained in the water pool with no release to the environment. All activity is assumed to be released from the fuel rods instantaneously.

3. Regulatory Position 1.3 – The chemical form of radioiodine released from the damaged fuel into the spent fuel pool is assumed to be 95% cesium iodide (CsI), 4.85% elemental iodine, and 0.15% organic iodide. The cesium iodide is assumed to completely dissociate in the spent fuel pool resulting in a final iodine distribution of 99.85% elemental iodine and 0.15% organic iodine.

4. Regulatory Position 2 – A minimum water depth of 23 feet is maintained above the damaged fuel assembly. Therefore, a DF of 286 is applied to the elemental iodine and a DF of 1 is applied to the organic iodine in order to provide an overall effective DF of 200 per this Regulatory Position. As a result, the breakdown of the iodine species above the surface of the water is 70% elemental and 30% organic. Use of a DF of 286 for elemental iodine is consistent with the guidance provided in NRC Regulatory Issue Summary (RIS) 2006-04, "Experience with Implementation of Alternate Source Terms," which provides guidance for the use of 285 for elemental iodine.

5. Regulatory Position 3 – All of the noble gas released is assumed to exit the pool without mitigation. All of the non-iodine particulate nuclides are assumed to be retained by the pool water.

6. Regulatory Position 4.1 – The analysis models the release to the environment over a 2-hour period.

7. Regulatory Position 4.2 – No credit is taken for filtration of the release.

8. Regulatory Position 4.3 – No credit is taken for dilution of the release.

9. Regulatory Position 5.1 – The containment equipment hatch is assumed to be open at the time of the fuel handling accident.

10. Regulatory Position 5.2 – No automatic isolation of the containment is assumed for the FHA.

11. Regulatory Position 5.3 – The release from the containment volume is assumed to leak to the environment over a two-hour period.

12. Regulatory Position 5.4 – No ESF filtration of the containment release is credited.

13. Regulatory Position 5.5 – Credit is taken for mixing of the activity released from the pool inside containment. The mixing volume used is assumed to be 9.05×10^5 ft^3, which is 50% of the containment net free internal volume stated in SAR Table 14-39.

2.2.3 Methodology

The input assumptions used in the dose consequence analysis of the FHA are provided in Table 2.2-1. It is assumed that the fuel handling accident occurs at 72 hours after shutdown of the reactor. 100% of the gap activity specified in Table 2.2-1 is assumed to be instantaneously released from 82 fuel rods of a single fuel assembly into the fuel pool. A minimum water level of 23 feet is maintained above the damaged fuel for the duration of the event. 100% of the noble gas released from the damaged fuel is assumed to escape from the pool. All of the non-iodine particulates released from the damaged fuel are assumed to be retained by the pool. Iodine released from the damaged fuel is assumed to be composed of 99.85% elemental and 0.15% organic. All activity released from the pool is assumed to leak unfiltered to the environment over a two-hour period. Credit for mixing of the released activity in one-half of the containment net free internal volume is taken.

The FHA source term meets the requirements of Regulatory Position 1 of Appendix B to RG 1.183. Section 1.7 discusses the development of the FHA source term, which is listed in Table 1.7.5-1. The analysis includes a decay time of 72 hours before the beginning of fuel movement. Since the FHA source term presented in Table 1.7.5-1 does not include this decay time, it is accounted for in the RADTRAD model.

For this event, the control room ventilation system cycles through two modes of operation: normal and emergency. Initially, the ventilation system is assumed to be operating in its normal mode supplying 35,200 cfm of unfiltered, fresh, outside air.

After the start of the event, the control room is assumed to be isolated due to a high radiation signal. This signal may be initiated due to shine from the approaching radioactive cloud or actual initial entry of radioactive material into the normal ventilation ductwork. Control room isolation is designed to occur within 5 seconds, but a 36-second delay is assumed in the analysis. During isolation of normal control room ventilation, the CREVS automatically starts up and pressurizes the control room. After isolation of normal control room ventilation, 333 cfm of filtered, outside makeup air is assumed to be supplied by the CREVS. CREVS is also assumed to recirculate and filter 1667 cfm of control room air.

The CREVS filter efficiencies that are applied to the filtered makeup air are 99% for particulate, elemental iodine, and organic iodine and to the recirculation flow are 99% for particulate and 95% for elemental iodine and organic iodine.

2.2.4 Radiological Consequences

The control room X/Q used for this event is based on the postulated release locations. The release point location is chosen that provides the largest calculated X/Q factor. For the FHA event, the release from containment to VPH-2 provides the maximum X/Q. Only the 2-hour X/Q factor is required throughout the event since all activity is released within 2 hours.

The EAB and LPZ dose consequences are determined using the X/Q factors provided in Table 1.8.2-1 for the appropriate time intervals.
The radiological consequences of the FHA are analyzed using the RADTRAD code and the inputs/assumptions previously discussed. As shown in Table 3-1, the results for EAB dose, LPZ dose and control room dose are all within the appropriate regulatory acceptance criteria.

2.3 Main Steam Line Break (MSLB)

2.3.1 Background

This event consists of a double-ended break of one main steam line as described in ANO-1 SAR Section 14.2.2.1. The affected steam generator (SG) rapidly depressurizes and releases its initial contents. Plant cooldown is then achieved via the remaining, unaffected SG. No fuel failure is postulated to occur during this event. The break is assumed to occur in piping located outside containment which provides bounding results.

2.3.2 Compliance with RG 1.183 Regulatory Positions

The MSLB dose consequence analysis followed the guidance provided in RG 1.183, Appendix E, "Assumptions for Evaluating the Radiological Consequences of a PWR Main Steam Line Break Accident," as discussed below:

1. Regulatory Position 1 – The total core inventory of the radionuclide groups utilized for determining the source term for this event is based on RG 1.183, Regulatory Position 3.1. No fuel damage is postulated to occur for the ANO-1 MSLB event.

2. Regulatory Position 2 – Since no fuel damage is postulated to occur during an ANO-1 MSLB, the maximum coolant activity allowed by the proposed, revised Technical Specifications (TSs) and the two cases of iodine spiking are assumed.

3. Regulatory Position 3 – The activity released from the fuel is assumed to be released instantaneously and homogeneously through the primary coolant.

4. Regulatory Position 4 – Iodine releases from the faulted SG and the unaffected SG to the environment (or containment) are assumed to be 97% elemental and 3% organic.

5. Regulatory Position 5.1 – The accident-induced primary-to-secondary leak rate of 1.0 gpm allowed by TS 5.5.9 is apportioned equally between the SGs (0.5 gpm per SG).

6. Regulatory Position 5.2 – A cold water density of 62.4 lbm/ft^3 is conservatively used in converting volumetric leak rates to mass leak rates.

7. Regulatory Position 5.3 – The primary-to-secondary leakage is assumed to continue on the unaffected SG until after the decay heat removal system has been placed in service and on the faulted SG until the temperature of the RCS is less than 212 °F.

8. Regulatory Position 5.4 – All noble gas radionuclides released from the primary system are assumed to be released to the environment without reduction or mitigation.

9. Regulatory Position 5.5.1 – In the faulted SG, all of the primary-to-secondary leakage is assumed to flash to vapor and be released to the environment with no mitigation. For the unaffected SG used for plant cooldown, a portion of the leakage is assumed to flash to vapor based on the thermodynamic conditions in the reactor and secondary. To address iodine transport for release from this SG, a steaming model was developed and based on conservative calculations, the flashing fraction of the primary-to-secondary leakage during cooldown is 0.05. The release of the remaining 95% of the activity in the leakage is considered in one of two ways: vaporization or mixing with the SG liquid. A portion (calculated to be about 5%) of the primary-to-secondary leakage is assumed to be vaporized due to heat transfer across the SG tubes in the steam covered region of the once-through-SG. This fraction is thus added to the flashed fraction to provide a total flashing plus vaporization fraction of approximately 0.1. For conservatism, the MSLB analysis assumes this "flashing fraction" is 0.2. The flashed and vaporized portion of the leakage is assumed to be directly released from the RCS to the atmosphere with no partitioning in the SG. The remaining portion (80%) of the primary-to-secondary leakage that is discharged as liquid to the unaffected SG is assumed to be mixed with the SG secondary side liquid inventory and released to the atmosphere with partitioning via steam releases from the bulk fluid in the SG. The SG tubes remain partially covered throughout the event. All values are held constant throughout the duration of the cooldown.

10. Regulatory Position 5.5.2 – ANO-1 does not have any period of total submergence of the SG tubes.

11. Regulatory Position 5.5.3 – All leakage that does not vaporize or immediately flash is assumed to mix with the bulk water.

12. Regulatory Position 5.5.4 – The radioactivity within the bulk water is assumed to become vapor at a rate that is a function of the steaming rate and the partition coefficient. A partition coefficient of 100 is assumed for the iodine. The retention of particulate radionuclides in the unaffected SG is limited by the moisture carryover from the SG, which is 0.1%. Thus, the partition coefficient for alkali metals is 0.001. No reduction in the release from the faulted SG is assumed.

13. Regulatory Position 5.6 – Partial uncovery of the tubes in the intact SG is postulated for the duration of the event. During this period, the fraction of primary-to-secondary leakage which flashes to vapor is assumed to be immediately released to the environment with no mitigation. The flashing fraction is based on the thermodynamic conditions in the reactor and secondary coolant. The leakage which does not flash is assumed to mix with the bulk water in the SG.

2.3.3 Other Assumptions

1. The initial RCS activity is assumed to be at the proposed, revised TS limit of 1.0 µCi/gm DE I-131 and 72/E-bar gross activity. The initial SG activity is assumed to be at the proposed, revised TS limit of 0.1 µCi/gm DE I-131.

2. The steam mass release rates for the intact SG are 2.5325 x10^5 gm/min from 0 to 2 hours, then 3.611 x 10^5 gm/min from 2 to 237.8 hrs after event initiation. These values are based upon a cooldown rate of 100 °F/hr for the first two hours followed by a cooldown rate of 4.634 °F/hr until the decay heat removal system is assumed to be placed in service and the intact SG isolated. Cooldown then continues using the decay heat removal system until the RCS temperature is reduced to 212 °F at 251.8 hours, stopping further releases through the faulted SG.

3. This evaluation assumes that the RCS mass remains constant throughout the MSLB event (no change in the RCS mass is assumed as a result of the MSLB or from the safety injection system).

4. For the purposes of determining the iodine concentration of the SG secondary, the mass in the unaffected SG is assumed to remain constant throughout the event.

5. Secondary releases from the intact SG are postulated to occur from the ADVs using the most limiting atmospheric dispersion factors. Secondary releases from the faulted SG are postulated to occur from main steam pipe using the most limiting atmospheric dispersion factors.

2.3.4 Methodology

Input assumptions used in the dose consequence analysis of the MSLB are provided in Table 2.3-1. The postulated accident is based upon a double-ended break of one main steam line outside of containment. Upon a MSLB, the affected SG rapidly depressurizes. The rapid secondary depressurization causes a reactor power transient, resulting in a reactor trip. Plant cooldown is achieved via the remaining unaffected SG.

The analysis assumes that activity is released as reactor coolant enters the steam generators due to primary-to-secondary leakage. All noble gases associated with this leakage are assumed to be released directly to the environment. Primary-to-secondary leakage into the faulted steam generator is also assumed to directly enter the atmosphere. Primary-to-secondary leakage is assumed to continue until the RCS temperature is reduced to 212 °F at 251.8 hours.

Primary-to-secondary tube leakage is also postulated to occur in the unaffected SG. A portion (20%) of this activity is vaporized or flashed and released unfiltered to the atmosphere. The remaining activity (80%) is diluted by the contents of the SG and released via steaming through the ADVs until the RCS is cooled to the decay heat removal system initiation temperature. In addition, the analysis assumes that the initial iodine activity in the faulted SG is released directly to the environment. The entire contents of the faulted SG are released immediately without filtration. The secondary coolant iodine concentration is assumed to be the maximum value of 0.1 µCi/gm DE I-131 permitted by the proposed, revised TS and the faulted SG liquid mass is assumed to be at its maximum operating value of 2.72 x 10^7 gm. These release assumptions are consistent with the requirements of RG 1.183.

For this event, the control room ventilation system cycles through two modes of operation: normal and emergency. Initially, the ventilation system is assumed to be operating in its normal mode supplying 35,200 cfm of unfiltered, fresh, outside air.

After the start of the event, the control room is assumed to be isolated due to a high radiation signal. This signal may be initiated due to shine from the approaching radioactive cloud or actual initial entry of radioactive material into the normal ventilation ductwork. A loss of offsite power would also initiate control room isolation. Control room isolation is designed to occur within 5 seconds, but a 10-second delay is assumed in the analysis. During isolation of normal control room ventilation, the CREVS automatically starts up and pressurizes the control room. After isolation of normal control room ventilation, 333 cfm of filtered, outside makeup air is assumed to be supplied by the CREVS. CREVS is also assumed to recirculate and filter 1667 cfm of control room air.

The CREVS filter efficiencies that are applied to the filtered makeup air are 99% for particulate, elemental iodine, and organic iodine and to the recirculation flow are 99% for particulate and 95% for elemental iodine and organic iodine.

2.3.5 Radiological Consequences

The control room atmospheric dispersion factors (X/Qs) used for this event are based on the postulated release locations. The release-receptor point locations are chosen to minimize the distance from the release point to the control room air intakes.

For the MSLB event, secondary releases from the intact SG are postulated to occur from the ADVs using the most limiting atmospheric dispersion factors. Secondary releases from the faulted SG are postulated to occur from main steam pipe using the most limiting atmospheric dispersion factors.

The EAB and LPZ dose consequences are determined using the X/Q factors provided Table 1.8.2-1 for the appropriate time intervals.

The radiological consequences of the MSLB Accident are analyzed using the RADTRAD code and the inputs/assumptions previously discussed. Two activity release cases corresponding to the RCS maximum pre-existing iodine spike and the accident-initiated iodine spike, based on the proposed, revised TS 3.4.12 limits, are analyzed. As shown in Table 3-1, the results of both cases for EAB dose, LPZ dose and control room dose are within the appropriate regulatory acceptance criteria.

2.4 Steam Generator Tube Rupture (SGTR)

2.4.1 Background

This event is assumed to be caused by the instantaneous rupture of a SG tube that relieves to the lower pressure secondary system. No melt or clad breach is postulated for the ANO-1 SGTR event. This event is described in Section 14.2.2.2 of the ANO-1 SAR.

Following a SGTR, the plant is assumed to continue to operate at full power for 11 minutes until a low RCS pressure reactor trip occurs. All primary-to-secondary leakage, as well as the ruptured tube flow, will be directed to the condenser where it is partitioned prior to release. A loss of offsite power (LOOP) is assumed to occur coincident with the reactor trip. The LOOP results in a loss of the condenser causing the MSSVs to open and provide steam relief. At 20 minutes, the operators initiate emergency cooldown of the RCS, then isolate the affected SG at 34 minutes, when the RCS temperature has decreased to a value that corresponds to the saturation pressure which is below the lowest MSSV setpoint. At this point, only the unaffected SG is used to continue cooldown to decay heat removal entry conditions and the release point then becomes the ADV with the worst X/Q values to the control room ventilation intakes. Using only one SG, it will take 237.8 hours to initiate Decay Hear Removal (DHR) and isolate the unaffected SG, thus terminating the release. Primary-to-secondary steam generator leakage is assumed to be at the ANO-1 TS maximum 150 gpd per SG throughout the event.

2.4.2 Compliance with RG 1.183 Regulatory Positions

The revised SGTR dose consequence analysis follows the guidance provided in RG 1.183, Appendix F, "Assumptions for Evaluating the Radiological Consequences of a PWR Steam Generator Tube Rupture Accident," as discussed below:

1. Regulatory Position 1 – The total core inventory of the radionuclide groups utilized for determining the source term for this event is based on RG 1.183, Regulatory Position 3.1. No fuel damage is postulated to occur for the ANO-1 SGTR event.

2. Regulatory Position 2 – Since no fuel damage is postulated to occur for the ANO-1 SGTR event, the maximum coolant activity allowed by the proposed, revised TSs and the two cases of iodine spiking are assumed.

3. Regulatory Position 2.1 – One case assumes a reactor transient prior to the postulated SGTR that raises the primary coolant iodine concentration to the maximum allowed by proposed, revised TS 3.4.12, 60.0 µCi/gm DE I-131. This is the pre-existing spike case.

4. Regulatory Position 2.2 – The other case assumes the transient associated with the SGTR causes an iodine spike. The spiking model assumes the primary coolant activity is initially at the proposed, revised TS 3.4.12 value of 1.0 µCi/gm DE I-131. Iodine is assumed to be released from the fuel into the RCS at a rate of 335 times the iodine equilibrium release rate for a period of 8 hours. This is the accident-initiated spike case.

5. Regulatory Position 3 – No activity is assumed to be released from the fuel, since no fuel damage is postulated.

6. Regulatory Position 4 – Iodine releases from the steam generators to the environment are assumed to be 100% elemental. Selection of different iodine fractions, e.g. 97% elemental and 3% organic, would not impact the overall results because the control room emergency ventilation system filter efficiencies are the same.

7. Regulatory Position 5.1 – The primary-to-secondary leak rate is 150 gpd per SG as specified by ANO-1 TS 3.4.13.

8. Regulatory Position 5.2 – A cold water density of 62.4 lbm/ft^3 is conservatively used in converting volumetric leak rates to mass leak rates.

9. Regulatory Position 5.3 – The primary-to-secondary leakage is assumed to continue until after the decay heat removal system has been placed in service and both SGs are isolated. The current Licensing Basis for the termination of the affected SG activity release states that the affected SG is isolated within 34 minutes by operator action. This isolation terminates releases from the affected SG, while primary-to-secondary leakage continues to provide activity for release from the unaffected SG.

10. Regulatory Position 5.4 – The release of fission products from the secondary system is evaluated with the assumption of a loss of offsite power (LOOP) at the time of reactor trip, 11 minutes after initiation of the SGTR per SAR Table 14-23. Prior to the reactor trip, the full power steaming rate is assumed.

11. Regulatory Position 5.5 – All noble gases released from the primary system are assumed to be released to the environment without reduction or mitigation.

12. Regulatory Position 5.6 – Regulatory Position 5.6 refers to Appendix E, Regulatory Positions 5.5 and 5.6. The iodine transport model for release from the steam generators is as follows:

    A portion of the primary-to-secondary leakage and ruptured tube flow is assumed to flash to vapor based on the thermodynamic conditions in the reactor and secondary coolant. To address iodine transport for release from the ANO-1 SGs, a steaming model was developed and based on conservative calculations, the flashing fraction of the primary-to-secondary leakage during cooldown is 0.05. The release of the remaining 95% of the activity in the leakage is considered in one of two ways: vaporization or mixing with the SG liquid. A portion (calculated to be about 5%) of the primary-to-secondary leakage and ruptured tube flow is assumed to be vaporized due to heat transfer across the SG tubes in the steam covered region of the once-through-SG. This fraction is thus added to the flashed fraction to provide a total flashing plus vaporization fraction of approximately 0.1. For conservatism, the SGTR analysis assumes this flashing fraction is 0.15. The flashed and vaporized portion of the leakage and ruptured tube flow is assumed to be directly released from the RCS to the atmosphere with no partitioning in the SG. The remaining portion (85%) of the primary-to-secondary leakage and ruptured tube flow that is discharged as liquid is assumed to be mixed with the SG secondary side liquid inventory and released to the atmosphere with partitioning via steam releases from the bulk fluid in the SG. The SG tubes remain partially covered throughout the event. All values are held constant throughout the duration of the cooldown. The radioactivity within the bulk water is assumed to become vapor at a rate that is a function of the steaming rate and the partition coefficient. A partition coefficient of 100 is assumed for the iodine. The retention of particulate radionuclides in the SGs is limited by the moisture carryover from the SGs, which is 0.1%. Thus, the partition coefficient for alkali metals is 0.001.

2.4.3 Other Assumptions

1. This evaluation assumes that the RCS mass remains constant throughout the event.

2. For the purposes of determining the iodine concentrations, the SG mass is assumed to remain constant throughout the event.

3. The calculated iodine equilibrium appearance rates are provided in Table 2.4-2 and the SGTR activity for an accident-initiated iodine spike is provided in Table 2.4-3.

2.4.4 Methodology

Input assumptions used in the dose consequence analysis of the SGTR event are provided in Table 2.4-1. This event is assumed to be caused by the instantaneous rupture of a SG tube releasing primary coolant to the lower pressure secondary system.

All primary-to-secondary leakage, as well as the ruptured tube flow, will be directed to the condenser where it is partitioned prior to release. A LOOP is assumed to occur coincident with the reactor trip. The LOOP results in a loss of the condenser causing the MSSVs to open and provide steam relief. At 20 minutes, the operators initiate emergency cooldown of the RCS, then isolate the affected SG at 34 minutes, when the RCS temperature has decreased to a value that corresponds to the saturation pressure which is below the lowest MSSV setpoint. At this point, only the unaffected SG is used to continue cooldown to decay heat removal entry conditions and the release point then becomes the ADV with the worst X/Q values to the control room ventilation intakes. Using only one SG, it will take 237.8 hours to initiate DHR and isolate the unaffected SG, thus terminating the release. Primary-to-secondary steam generator leakage is assumed to be at the ANO-1 Technical Specification maximum 150 gpd per SG throughout the event.

A thermal-hydraulic analysis is performed to determine a conservative maximum break flow, break flashing flow, and steam release inventory through the faulted SG relief valves. Additional activity, based on the current TS limit for primary-to-secondary leakage, is released to the SG until the RCS is cooled to decay heat removal system entry conditions.

No fuel failure is postulated for the SGTR event.

Consistent with RG 1.183 Appendix F, Regulatory Position 2, if no, or minimal, fuel damage is postulated for the limiting event, the activity release is assumed as the maximum allowed by TSs for two cases of iodine spiking: (1) maximum pre-existing iodine spike and (2) maximum accident-initiated, or concurrent, iodine spike.

For the case of a pre-accident iodine spike, a reactor transient is assumed to have occurred prior to the postulated SGTR event. The primary coolant iodine concentration is increased to the maximum value of 60 μCi/gm DE I-131 permitted by proposed, revised TS 3.4.12. Primary coolant is released into the ruptured SG by the tube rupture and by the allowable primary-to-secondary leakage.

Activity is released to the environment from the ruptured SG via direct flashing of a fraction of the released primary coolant from the tube rupture and also via steaming from the ruptured SG until the ruptured steam generator is isolated at 34 minutes. The unaffected SG is used to continue the cooldown of the plant. Primary-to-secondary tube leakage is also postulated into the intact SG. Activity is released via steaming from the unaffected SG ADV until the RCS is cooled to decay heat removal system entry conditions. These release assumptions are consistent with the requirements of RG 1.183.

For the case of the accident-initiated iodine spike, the postulated STGR event induces a concurrent iodine spike. The RCS activity is initially assumed to be 1.0 µCi/gm DE 1-131 as allowed by proposed, revised TS 3.4.12. Iodine is released from the fuel into the RCS at a rate of 335 times the iodine equilibrium release rate for a period of 8 hours.

The appearance rates and the iodine activities for the accident-initiated iodine spike case are presented in Tables 2.4-2 and 2.4-3, respectively. All other release assumptions for this case are identical to those for the pre-existing spike case.

For this event, the control room ventilation system cycles through two modes of operation: normal and emergency. Initially, the ventilation system is assumed to be operating in its normal mode supplying 35,200 cfm of unfiltered, fresh, outside air.

The control room is assumed to be isolated due to a loss of offsite power at 11 minutes, although a high radiation signal due to shine from the approaching radioactive cloud or actual initial entry of radioactive material into the normal ventilation ductwork is expected to initiate isolation sooner. With isolation of normal control room ventilation, the CREVS starts up and pressurizes the control room. After isolation of normal control room ventilation, 333 cfm of filtered, outside makeup air is assumed to be supplied by the CREVS. CREVS is also assumed to recirculate and filter 1667 cfm of control room air.

The CREVS filter efficiencies that are applied to the filtered makeup air are 99% for particulate, elemental iodine, and organic iodine and to the recirculation flow are 99% for particulate and 95% for elemental iodine and organic iodine.

2.4.5 Radiological Consequences

The control room atmospheric dispersion factors (X/Qs) used for this event are based on the postulated release locations. The release-receptor point locations are chosen to minimize the distance from the release point to the control room air intakes. Prior to reactor trip, the release is assumed to originate from the condenser and the worst-case ADV X/Q is used. Following the trip, the releases from both the intact and faulted SGs are assumed to occur from the closest MSSV until the operator isolates the affected steam generator at 34 minutes. Releases during the remainder of the cooldown will be from the closest ADV.

The EAB and LPZ dose consequences are determined using the X/Q factors provided Table 1.8.2-1 for the appropriate time intervals.

The radiological consequences of the SGTR Accident are analyzed using the RADTRAD code and the inputs/assumptions previously discussed. Two activity release cases corresponding to the RCS maximum pre-existing iodine spike and the accident-initiated iodine spike, based on

the proposed, revised TS 3.4.12 limits, are analyzed. As shown in Table 3-1, the radiological consequences of the ANO-1 SGTR event for EAB dose, LPZ dose and control room dose are all within the appropriate regulatory acceptance criteria.

2.5 Reactor Coolant Pump Shaft Seizure (Locked Rotor)

2.5.1 Background

This event is caused by an instantaneous seizure of a primary reactor coolant pump rotor. Flow through the affected loop is rapidly reduced, causing a reactor trip on a flux-flow signal. Fuel damage may be predicted to occur at some plants as a result of this accident. This event is described in Section 14.1.2.6 of the ANO-1 SAR.

2.5.2 Compliance with RG 1.183 Regulatory Positions

Regulatory Position 2 – No fuel damage is postulated for this event as discussed in SAR Section 14.1.2.6. Therefore, no locked rotor AST dose consequence analysis has been performed since the consequences of this event are bounded by the consequences of the MSLB outside containment.

2.6 Control Rod Ejection Accident (CREA)

2.6.1 Background

This event consists of an uncontrolled withdrawal of a single control rod. The CREA results in a reactivity insertion that leads to a core power level increase and subsequent reactor trip. Following the reactor trip, plant cooldown is performed using steam release from the SG ADVs. Two CREA cases are considered. The first case assumes that 100% of the activity released from the damaged fuel is instantaneously and homogeneously mixed throughout the containment atmosphere. The second case assumes that 100% of the activity released from the damaged fuel is completely dissolved in the primary coolant and is available for release to the secondary system. This event is described in ANO-1 SAR Section 14.2.2.4.

2.6.2 Compliance with RG 1.183 Regulatory Positions

The CREA dose consequence analysis followed the guidance provided in RG 1.183 Appendix H, "Assumptions for Evaluating the Radiological Consequences of a PWR Rod Ejection Accident," as discussed below:

1. Regulatory Position 1 – The total core inventory of the radionuclide groups utilized for determining the source term for this event is based on RG 1.183, Regulatory Position 3.1, and is provided in Table 1.7.4-1. The inventory provided in Table 1.7.4-1 is adjusted for the fraction of fuel damaged and a radial peaking factor of 1.8 is applied. The release fractions provided in RG 1.183 Table 3 are adjusted to comply with the specific RG 1.183 Appendix H release requirements. For both the containment and secondary release cases, the 10% of the noble gas and iodine inventory and 12% of the alkali metal inventory is assumed to be in the fuel gap. No ANO-1 fuel experiences fuel centerline melt during a CREA.

2. Regulatory Position 2 – Fuel damage is assumed for this event.

3. Regulatory Position 3 – For the containment release case, 100% of the activity released from the damaged fuel is assumed to mix instantaneously and homogeneously in the containment atmosphere. For the secondary release case, 100% of the activity released from the damaged fuel is assumed to mix instantaneously and homogeneously in the primary coolant and be available for leakage to the secondary side of the SGs.

4. Regulatory Position 4 – The chemical form of radioiodine released from the damaged fuel to the containment is assumed to be 95% cesium iodide (CsI), 4.85% elemental iodine, and 0.15% organic iodide. No credit for containment spray actuation is taken.

5. Regulatory Position 5 – The chemical form of radioiodine released from the SGs to the environment is assumed to be 97% elemental iodine, and 3% organic iodide.

6. Regulatory Position 6.1 – For the containment leakage case, sedimentation of particulates in the containment is credited. Containment spray and PRVS are not credited in the CREA analysis.

7. Regulatory Position 6.2 – The containment is assumed to leak at the TS maximum allowable rate of 0.2% for the first 24 hours and 0.1% for the remainder of the event.

8. Regulatory Position 7.1 – The primary-to-secondary leak rate is 300 gpd (150 gpd per SG as specified by ANO-1 TS 3.4.13.

9. Regulatory Position 7.2 – A cold water density of 62.4 lbm/ft^3 is conservatively used in converting volumetric leak rates to mass leak rates.

10. Regulatory Position 7.3 – All of the noble gas released to the secondary side is assumed to be released directly to the environment without reduction or mitigation.

11. Regulatory Position 7.4 – Regulatory Position 7.4 refers to Appendix E, Regulatory Positions 5.5 and 5.6. The iodine transport model for release from the steam generators is as follows:

    For the secondary release case, both steam generators are used for plant cooldown. A portion of the primary-to-secondary leakage is assumed to flash to vapor based on the thermodynamic conditions in the reactor and secondary coolant. The SG tubes remain partially covered throughout the event. To address iodine transport for release from the ANO-1 SGs, a steaming model was developed and based on conservative calculations, the flashing fraction of the primary-to-secondary leakage during cooldown is 0.05. This value is held constant throughout the duration of the cooldown. The flashed portion of the primary-to-secondary leakage is modeled as a direct release from the reactor coolant system to the environment with no credit for partitioning or depletion. The release of the remaining 95% of the activity in the leakage is modeled in two ways: (1) a portion (calculated to be about 5%, but 10% is conservatively used) of the primary-to-secondary leakage discharged as liquid is assumed to be vaporized due to heat transfer across the SG tubes in the steam covered region of the once-through-SG and is assumed to be directly released from the RCS to the atmosphere with no partitioning in the SG, and (2) the remaining portion of the

primary to secondary leakage discharged as liquid is assumed to be mixed with the SG secondary side liquid inventory and released to the atmosphere with partitioning via steam releases from the bulk fluid in the SG. The radioactivity within the bulk water is assumed to become vapor at a rate that is a function of the steaming rate and the partition coefficient. A partition coefficient of 100 is assumed for the iodine. The retention of particulate radionuclides in the SGs is limited by the moisture carryover from the SGs, which is 0.1%. Thus, the partition coefficient for alkali metals is 0.001.

2.6.3 Other Assumptions

1. The initial RCS and secondary activities are neglected due to the activity associated with the failed fuel being much larger in comparison.

2. The steam mass release rates for the SGs are provided in Table 2.6-2. The initial value is based upon a cooldown rate of 100 °F/hr for 2 hours. The cooldown is then conservatively continued at a rate of 4.634 °F/hr for 36.25 hours when the decay heat removal system is assumed to be placed into service and the SGs bypassed.

3. The SG tube leakage mass flow rate is conservatively held constant throughout the event at 788.4 gm/min.

4. This evaluation assumes that the RCS mass remains constant throughout the event.

5. For the purposes of determining the iodine concentrations, the SG mass is assumed to remain constant throughout the event.

6. Following the CREA, 14% of the fuel is assumed to fail as a result of Departure from Nucleate Boiling (DNB).

7. All secondary releases are postulated to occur for the first 30 minutes from the MSSV with the most limiting atmospheric dispersion factor. After 30 minutes, all secondary releases are postulated to occur from the ADV with the most limiting atmospheric dispersion factors.

8. The initial leakage rate from containment is 0.2% of the containment air per day. This leak rate is reduced by 50% after 24 hours to 0.1%/day. No credit for releases from the containment through the PRVS has been taken. All containment releases are released unfiltered to the environment via a ground level release.

9. For the release inside containment, sedimentation of particulates is credited. A conservative sedimentation coefficient of 0.1/hr is used until a DF of 1000 is reached at approximately 69 hours. Containment sprays are not credited.

2.6.4 Methodology

Input assumptions used in the dose consequence analysis of the CREA are provided in Table 2.6-1. The postulated accident consists of two cases. One case assumes that 100% of the activity released from the damaged fuel is instantaneously and homogeneously mixed throughout the containment atmosphere, and the second case assumes that 100% of the activity released from the damaged fuel is completely dissolved in the primary coolant and is available for release to the secondary system.

For the containment release case, 100% of the activity is released instantaneously to the containment. The releases from the containment are released unfiltered to the environment via a ground level release using the limiting containment release point X/Q. Sedimentation of particulates inside containment is credited. Removal of activity via containment spray is not credited.

For the secondary release case, primary coolant activity is released into the SGs by leakage across the SG tubes. The activity on the secondary side is then released via steaming from the MSSVs or ADVs until the decay heat removal system is assumed to be placed into service and the SGs isolated at 38.25 hours into the event. All noble gases associated with this leakage are assumed to be released directly to the environment.

The CREA is evaluated with the assumption that 14% of the fuel experiences DNB. The activity released from the damaged fuel corresponds to the requirements set out in Regulatory Position 1 of Appendix H to RG 1.183. A radial peaking factor of 1.8 is applied in the development of the source terms.

For this event, the control room ventilation system cycles through two modes of operation: normal and emergency. Initially, the ventilation system is assumed to be operating in its normal mode supplying 35,200 cfm of unfiltered, fresh, outside air.

After the start of the event, the control room is assumed to be isolated due to a high radiation signal. This signal may be initiated due to containment shine, shine from the approaching radioactive cloud or actual initial entry of radioactive material into the normal ventilation ductwork. A loss of offsite power would also initiate control room isolation. Control room isolation is designed to occur within 5 seconds, but a 10-second delay is assumed in the analysis. During isolation of normal control room ventilation, the CREVS automatically starts up and pressurizes the control room. After isolation of normal control room ventilation, 333 cfm of filtered, outside makeup air is assumed to be supplied by the CREVS. CREVS is also assumed to recirculate and filter 1667 cfm of control room air.

The CREVS filter efficiencies that are applied to the filtered makeup air are 99% for particulate, elemental iodine, and organic iodine and to the recirculation flow are 99% for particulate and 95% for elemental iodine and organic iodine.

2.6.5 Radiological Consequences

The control room atmospheric dispersion factors (X/Qs) used for this event are based on the postulated release locations. The release-receptor point locations are chosen to provide the largest calculated X/Q factors. For the CREA, all secondary releases are from the closest MSSV or ADV. X/Qs for containment releases are based on the worst-case containment release X/Qs.

The EAB and LPZ dose consequences are determined using the X/Q factors provided in Table 1.8.2-1 for the appropriate time intervals.

The radiological consequences of the CREA are analyzed using the RADTRAD code and the inputs/assumptions previously discussed. As shown in Table 3-1, the results of both cases for EAB dose, LPZ dose and control room dose are all within the appropriate regulatory acceptance criteria.

2.7 Environmental Qualification (EQ)

RG 1.183, Regulatory Position 6, allows the licensee to use either the AST or TID-14844 assumptions for performing the required EQ analyses until such time as a generic issue related to the effect of increased cesium releases on EQ doses is resolved. The ANO-1 EQ analyses will continue to be based on TID-14844 assumptions.

3.0 Summary of Results

Results of the ANO-1 radiological consequence analyses using the AST methodology and the corresponding allowable control room unfiltered inleakage are summarized on Table 3-1.

4.0 Conclusion

Full implementation of the AST methodology, as defined in Regulatory Guide 1.183, into the design basis accident analysis has been made to support control room habitability in the event of increases in control room unfiltered air inleakage. Analysis of the dose consequences of the LOCA, FHA, MSLB, SGTR, and CREA have been made using the RG 1.183 methodology. The analyses used assumptions consistent with proposed changes in the ANO-1 licensing basis and the calculated doses do not exceed the defined acceptance criteria.

This report supports a maximum allowable control room unfiltered air inleakage of 82 cfm.

5.0 References

1 ANO-1 Safety Analysis Report (SAR) (through Amendment 22).

2 TID-14844, "Calculation of Distance Factors for Power and Test Reactor Sites," March 23, 1962.

3 NRC Generic Letter 2003-01, "Control Room Habitability," June 12, 2003.

4 NEI 99-03, "Control Room Habitability Guidance," Nuclear Energy Institute, Revision 0 dated June 2001 and Revision 1 dated March 2003.

5 Code of Federal Regulations, 10CFR50.67, "Accident Source Term," revised 12/03/02.

6 NRC, Regulatory Guide 1.183, "Alternative Radiological Source Terms for Evaluating Design Basis Accidents at Nuclear Power Plants," July 2000.

7 ANO-1 Technical Specifications (through Amendment 230).

8 NRC Regulatory Issue Summary 2006-04, "Experience With Implementation of Alternate Source Terms," March 7, 2006.

9 Federal Guidance Report No. 11 (FGR 11), "Limiting Values of Radionuclide Intake and Air Concentration and Dose Conversion Factors for Inhalation, Submersion, and Ingestion," 1989.

10 Federal Guidance Report No. 12 (FGR 12), "External Exposure to Radionuclides in Air, Water, and Soil," 1993.

11 ARCON96 Computer Code ("Atmospheric Relative Concentrations in Building Wakes," NUREG/CR-6331, Rev. 1.

12 ORNL/TM-2005/39. Version 5, Vol. II, Book 1, Sect. F7, ORIGEN-S: SCALE System Module to Calculate Fuel Depletion, Actinide Transmutation, Fission Product Buildup and Decay, and Associated Radiation Source Terms," I.C. Gauld et al, April 2005.

13 "SCAP-II Version 1," A. H. Fero, 9/20/1994.

14 RSIC Computer Code Collection CCC-650, "DOORS 3.2 One-, Two-, and Three-Dimensional Discrete Ordinates Neutron/Photon Transport Code System," Radiation Safety Information Computational Center, Oak Ridge National Laboratory, August 1998.

15 RSIC Data Library Collection DLC-185, "BUGLE-96 Coupled 47 Neutron, 20 Gamma-Ray Group Cross Section Library Derived from ENDF/B-VI for LWR Shielding and Pressure Vessel Dosimetry Applications," Radiation Shielding Information Center, Oak Ridge National Laboratory, March 1996.

16 "Software Release for RADTRAD Version 3.03," January 5, 2005.

17 NRC Regulatory Guide 1.194, "Atmospheric Relative Concentrations for Control Room Radiological Habitability Assessments at Nuclear Power Plants", June 2003.

18 NRC Regulatory Guide 1.145, "Atmospheric Dispersion Models for Potential Accident Consequence Assessment at Nuclear Power Plants," Rev. 1, February 1983.

19 Entergy letter 2CAN120001 to the NRC, "Application for License Amendment to Increase Authorized Power Level," dated December 19, 2000.

20 Entergy letter 2CAN070103 to the NRC, "Radiological Dose Consequence Calculations to Support ANO-2 Power Uprate," dated July 3, 2001.

21 NUREG-0800, USNRC, "Standard Review Plan for the Review of Safety Analysis Reports for Nuclear Power Plants," September 1981 (or updates of specific sections).

22 USNRC, Regulatory Guide 1.52, "Design, Inspection, and Testing Criteria for Air Filtration and Adsorption Units of Post-Accident Engineered-Safety-Feature Atmosphere Cleanup Systems in Light-Water-Cooled Nuclear Power Plants," Rev. 3, June 2001.

23 NRC Generic Letter 99-02, "Laboratory Testing of Nuclear-Grade Activated Charcoal," June 3, 1999.

24 USNRC Regulatory Guide 1.23, "Onsite Meteorological Programs," February 1972.

25 NUREG/CR-6604, "RADTRAD: A Simplified Model for RADionuclide Transport and Removal And Dose Estimation," December 1997, including Supplements 1 (June 1999) and 2 (October 2002).

26 Entergy letter 1CAN060302 to the NRC, "License Amendment Request to Add a New Control Room Emergency Ventilation System Surveillance Requirement," dated June 30, 2003.

27 Entergy letter 1CAN018008 to the NRC, "Control Room Toxic Gas Protection," dated January 10, 1980.

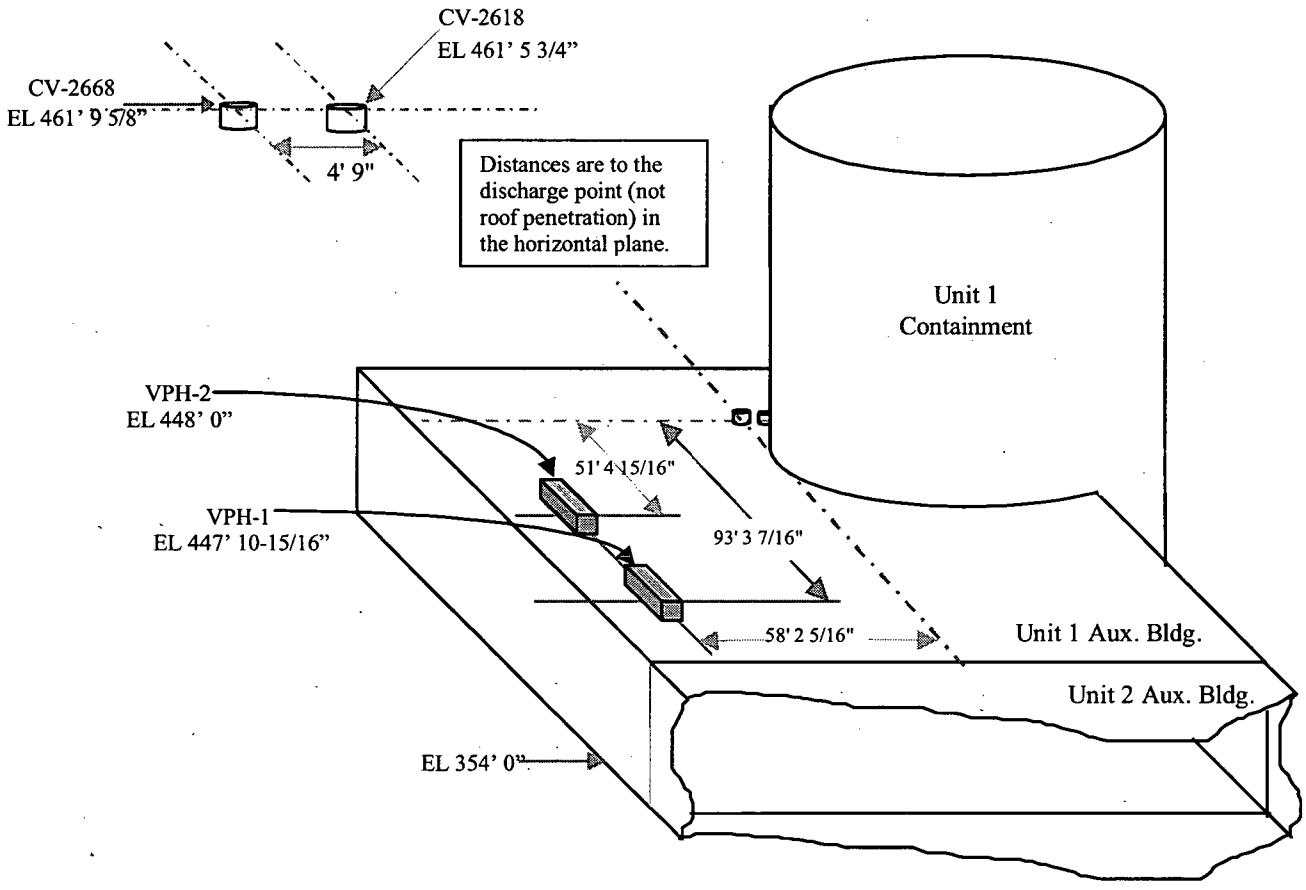

Figure 1.8.1-1

Position of the Unit 1 ADVs in relation to the control room intake structures VPH-1 and VPH-2
(centerline of ANO-1&2 auxiliary buildings run north-south; unit 2 is directly north of unit 1)

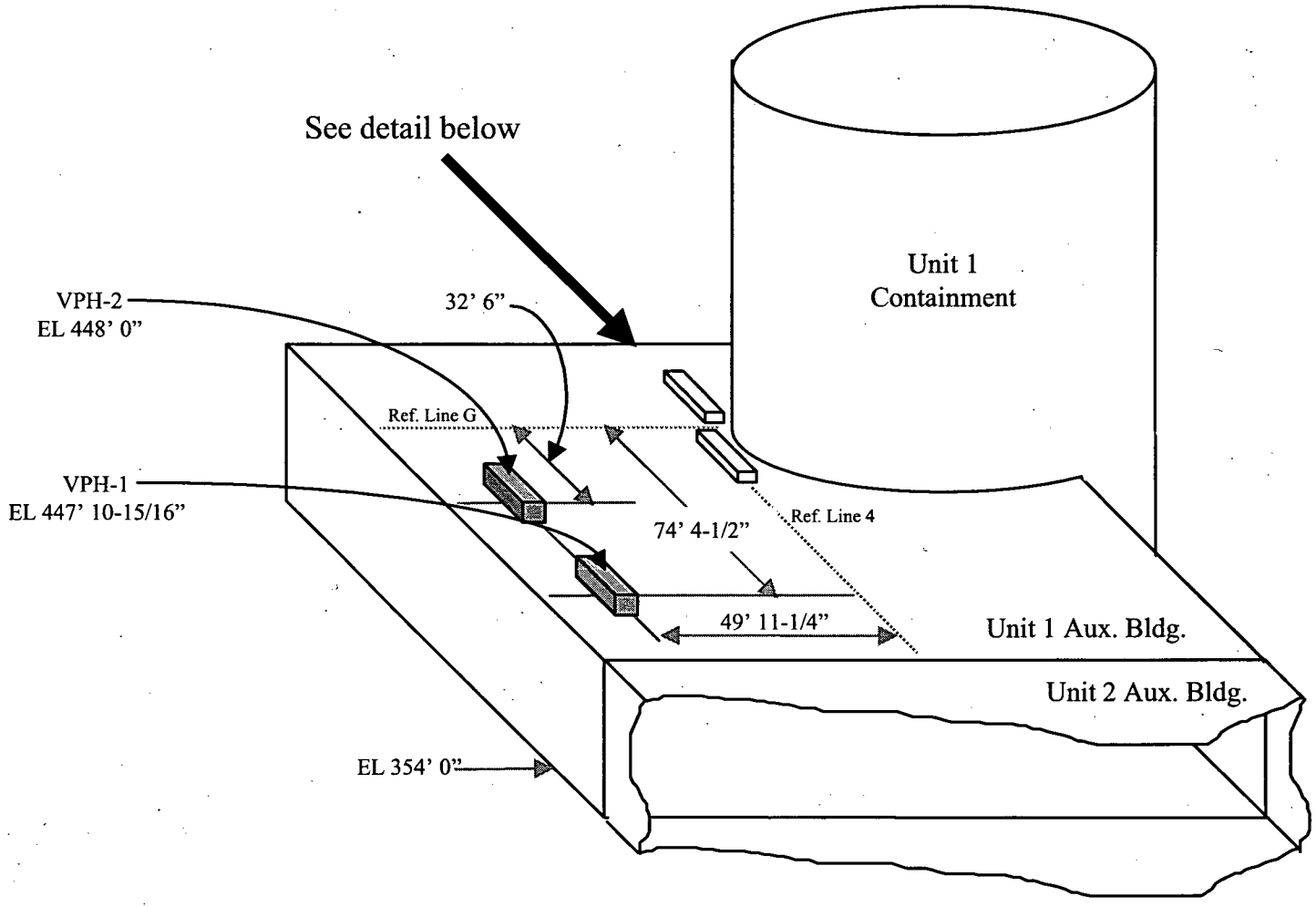

Figure 1.8.1-2

Position of the Unit 1 MSSV's in relation to the control room intake structures VPH-1 and VPH-2
(centerline of ANO-1&2 auxiliary buildings run north-south; unit 2 is directly north of unit 1)

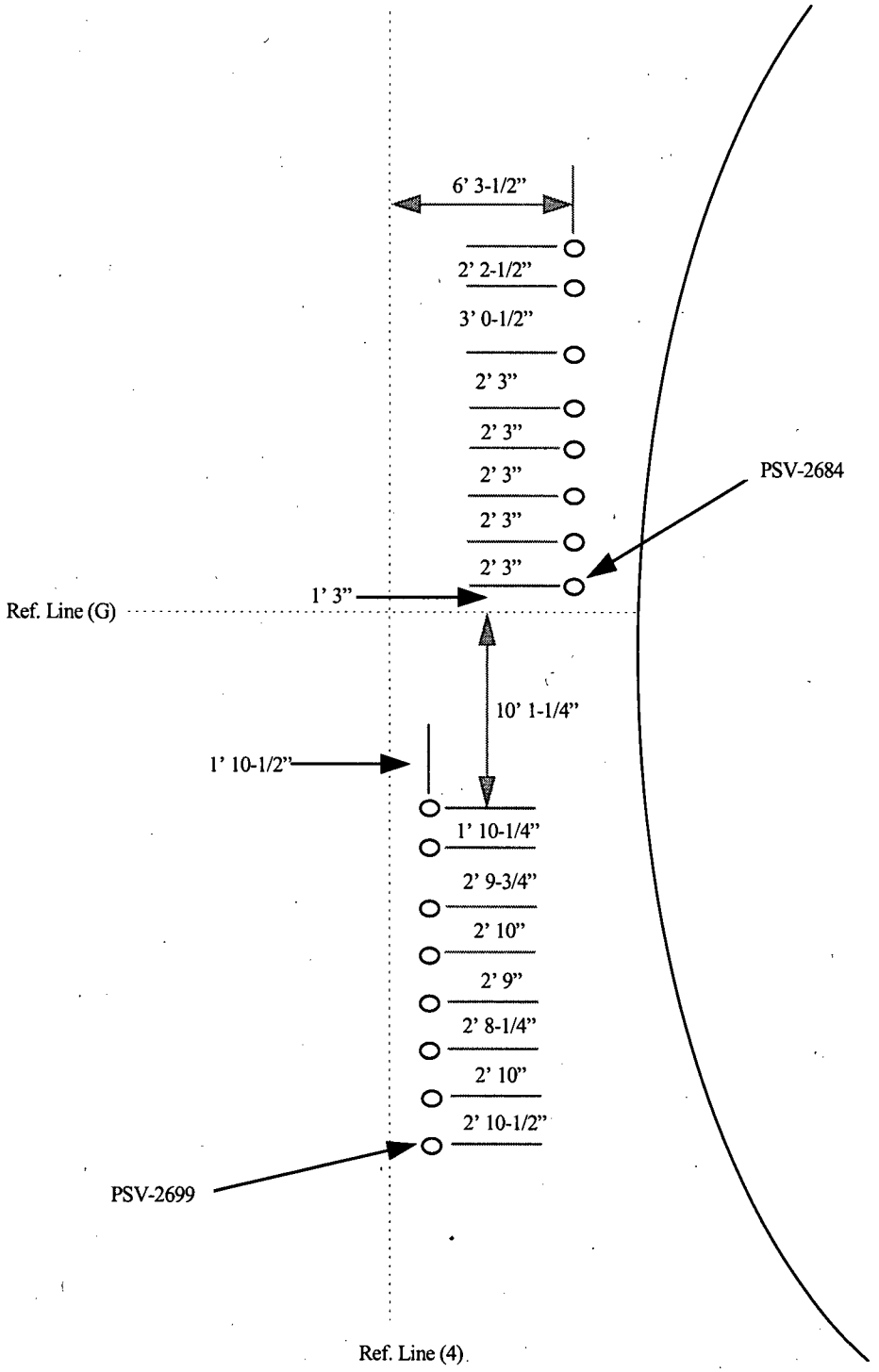

Figure 1.8.1-3

Layout of MSSV's relative to column designators "G" and "4", which are used in Figure 1.8.1-2 (true north toward bottom of figure)

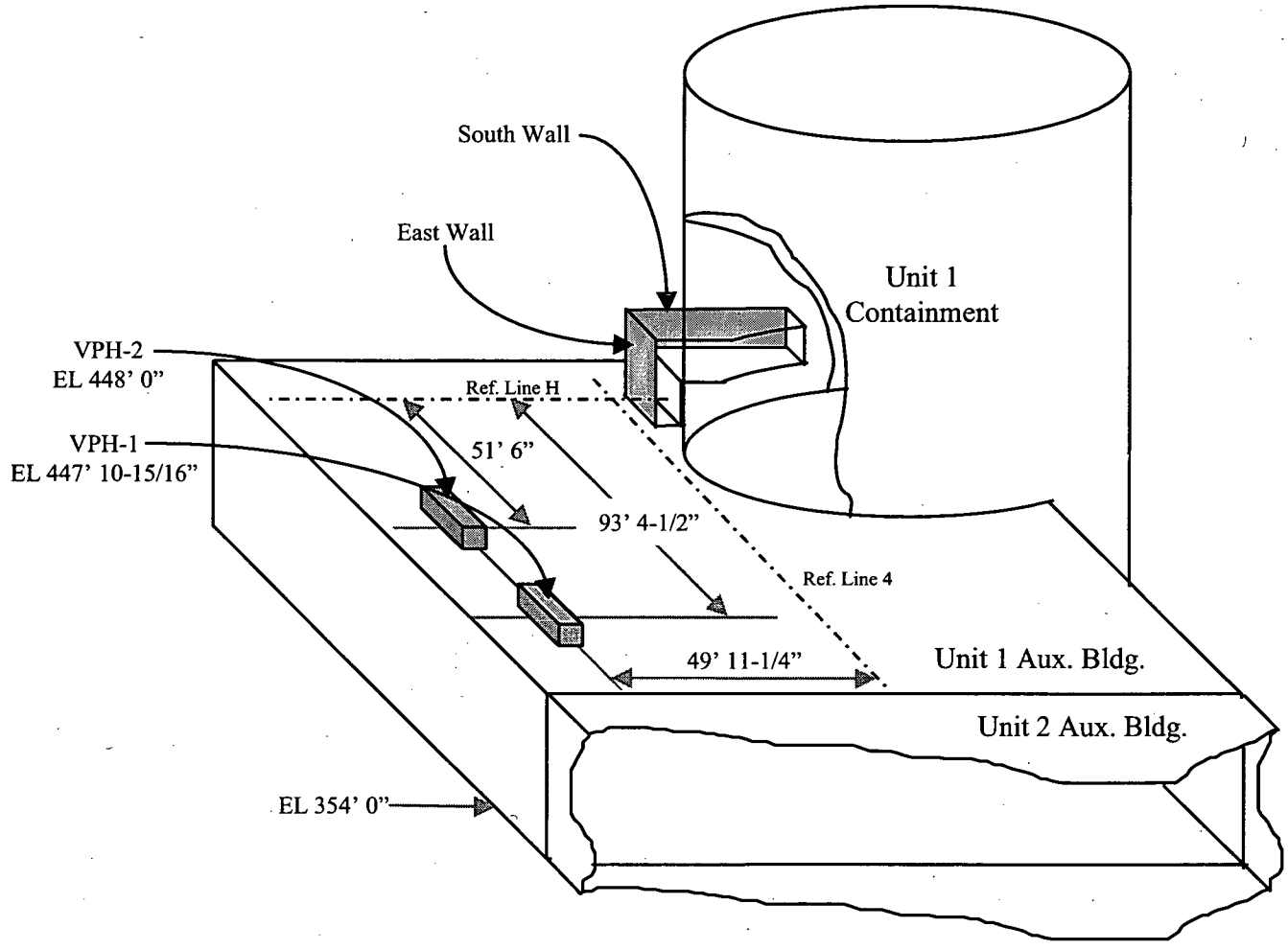

Figure 1.8.1-4

Position of the Unit 1 main steam pipe area (Room 170) in relation to the control room intake structures VPH-1 and VPH-2 (centerline of ANO-1&2 auxiliary buildings run north-south; unit 2 is directly north of unit 1)

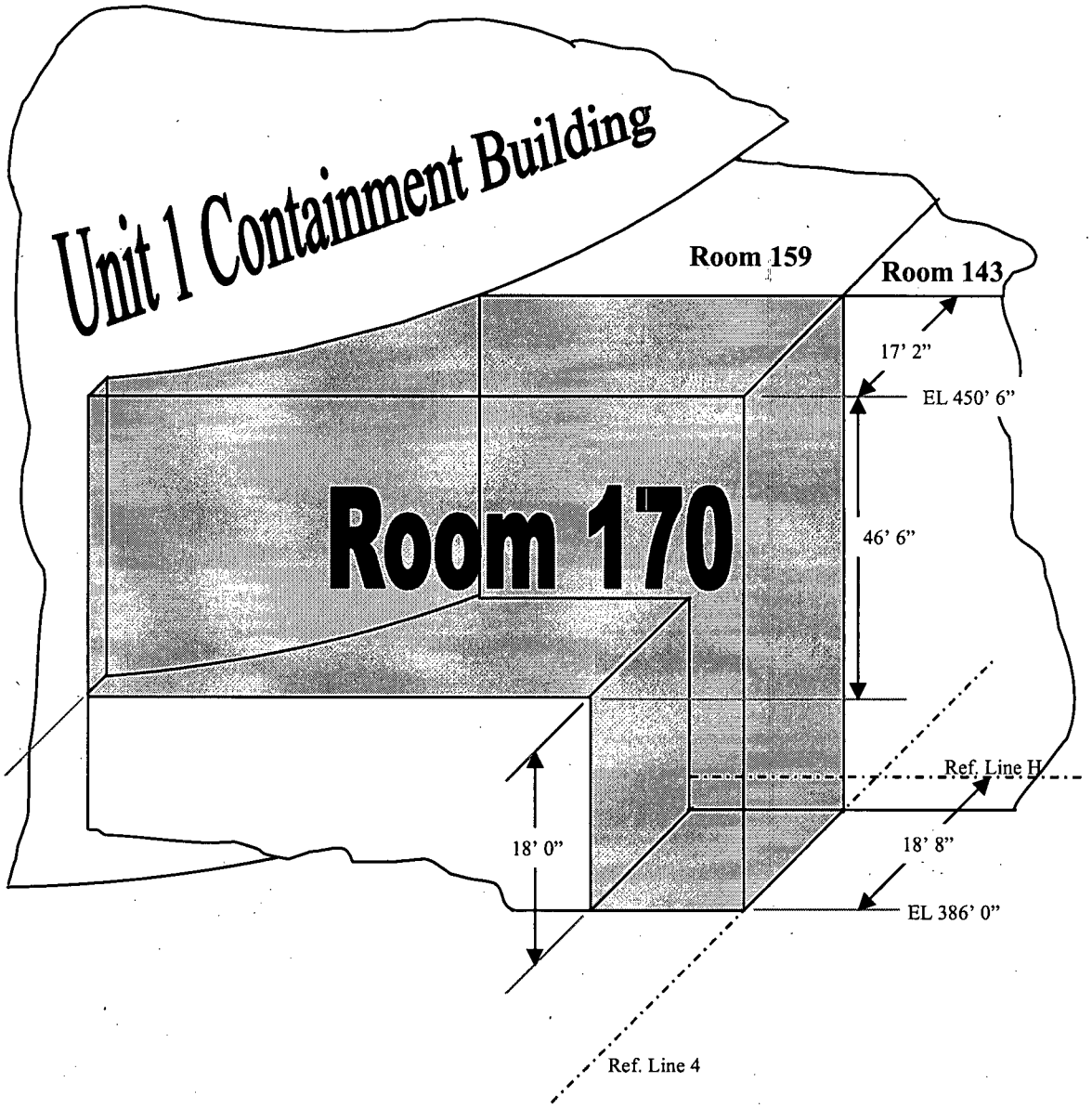

Figure 1.8.1-5

Details of the wall locations for the Unit 1 main steam pipe area (Room 170)

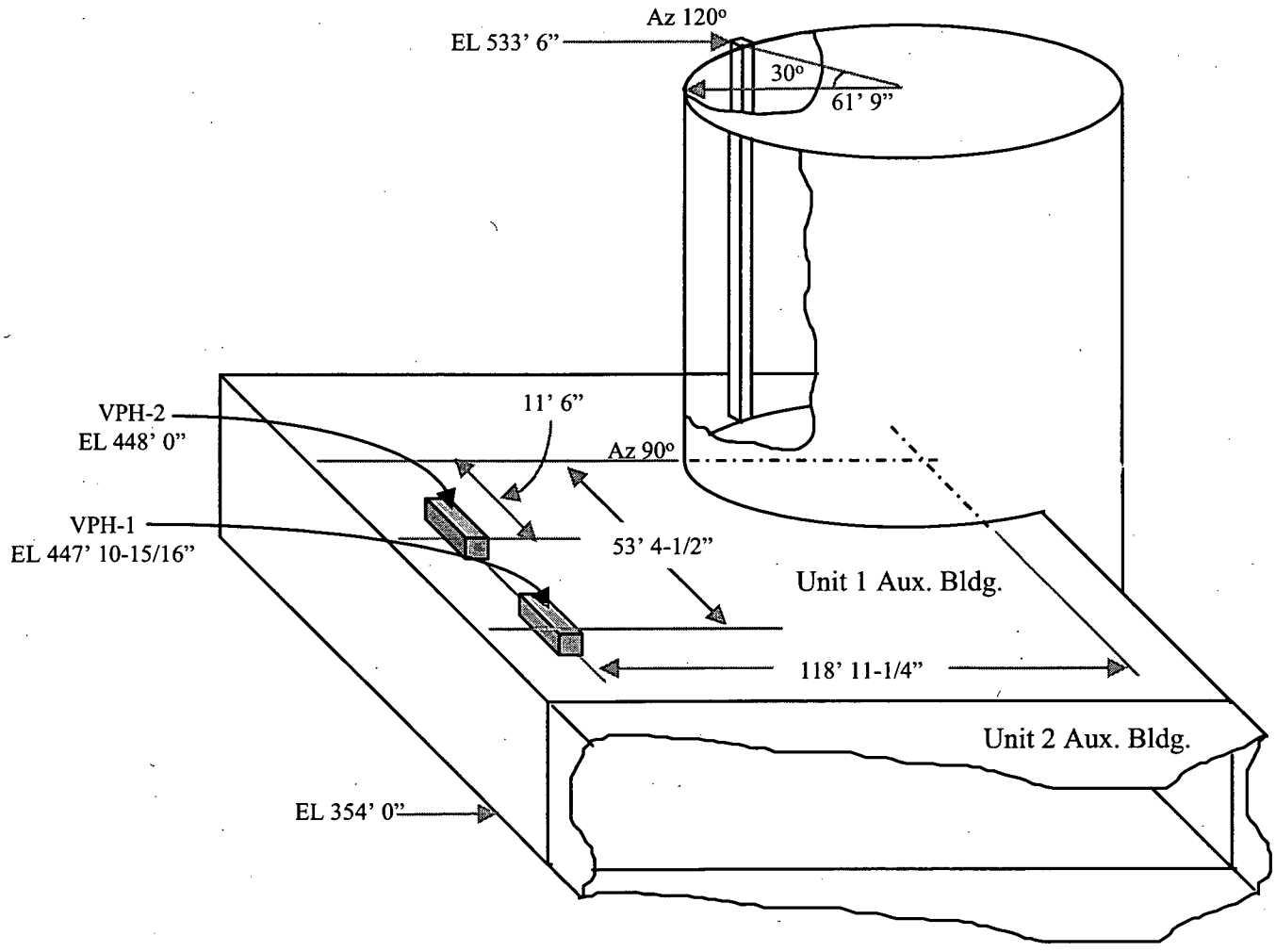

Figure 1.8.1-6

Arrangement of Unit 1 fuel handling area ventilation exhaust structure relative to VPH-1 and VPH-2(centerline of ANO-1&2 auxiliary buildings run north-south; unit 2 is directly north of unit 1)

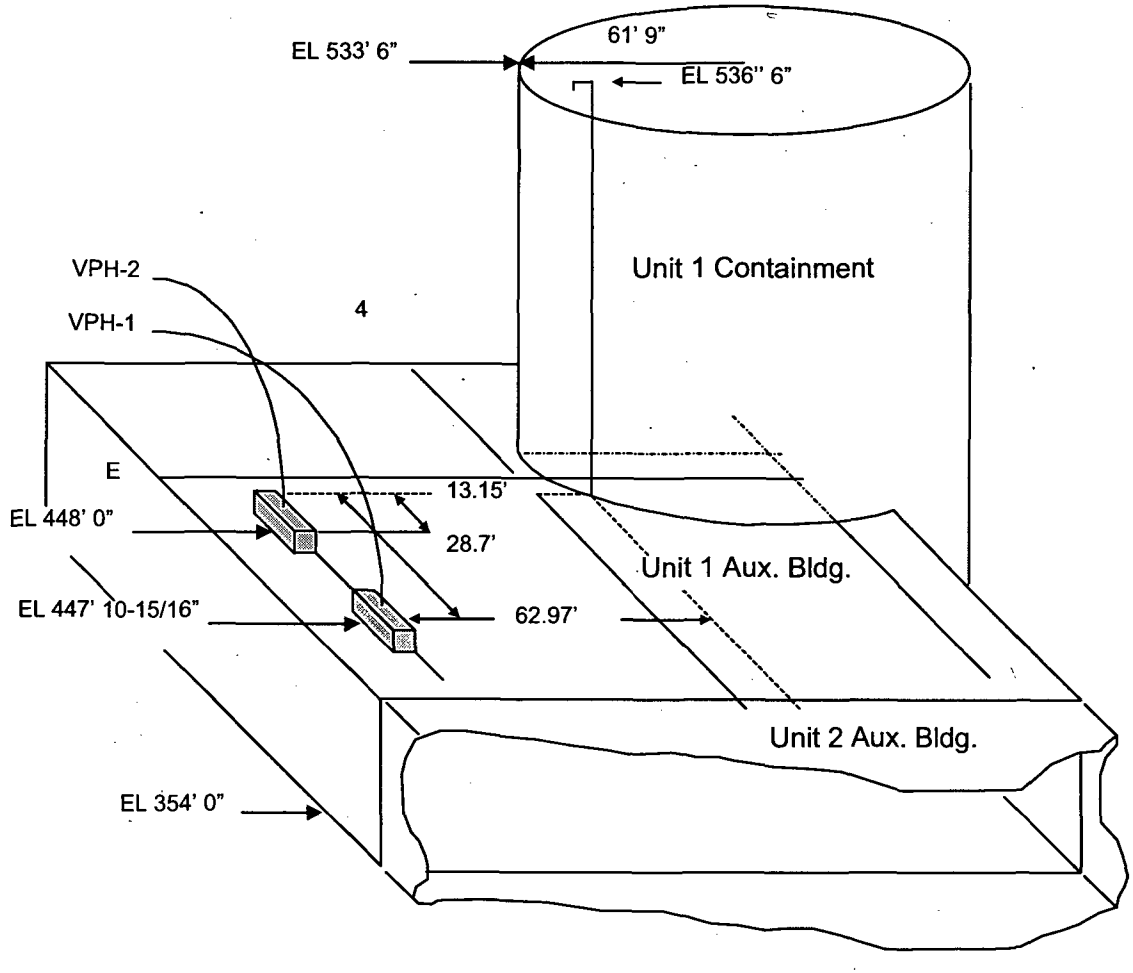

Figure 1.8.1-7

Arrangement of Unit 1 penetration room ventilation exhaust relative to VPH-1 and VPH-2
(centerline of ANO-1&2 auxiliary buildings run north-south; unit 2 is directly north of unit 1)

Table 1.6.3-1

Control Room Ventilation System Parameters

Parameter	Value
Control Room Volume	40,000 ft^3
Normal Operation	
Filtered Make-up Flow Rate	0 cfm
Filtered Recirculation Flow Rate	0 cfm
Unfiltered Make-up Flow Rate	35,200 cfm
Emergency Operation	
Filtered Make-up Flow Rate	333 cfm
Filtered Recirculation Flow Rate	1667 cfm
Unfiltered Make-up Flow Rate	0 cfm
Unfiltered Inleakage:	
- LOCA, CREA	82 cfm
- MSLB, SGTR, FHA	85 cfm
Filter Efficiencies	
Make-up Flow (two 2" filters):	
- Particulate	99%
- Elemental	99%
- Organic	99%
Recirculation Flow (one 2" filter):	
- Particulate	99%
- Elemental	95%
- Organic	95%

Table 1.6.5-1

Control Room Doses Due to Containment Shine

Time After Accident (hrs)	Gamma Ray Dose Rate (Rem/hr)	Integrated Dose (Rem)	Time After Accident (hrs)	Gamma Ray Dose Rate (Rem/hr)	Integrated Dose (Rem)
0.0083	3.96E-02	1.10E-05	**3.31**	1.03E-02	3.78E-02
0.1083	6.53E-03	1.76E-03	**3.81**	7.90E-03	4.21E-02
0.2083	3.89E-03	2.26E-03	**5.81**	4.69E-03	5.44E-02
0.31	3.27E-03	2.62E-03	**7.81**	2.84E-03	6.18E-02
0.41	3.06E-03	2.93E-03	**9.81**	1.73E-03	6.62E-02
0.51	2.97E-03	3.23E-03	**11.81**	1.06E-03	6.90E-02
0.83	8.19E-03	4.90E-03	**16.50**	1.01E-03	7.38E-02
1.16	1.22E-02	8.17E-03	**24.00**	3.33E-04	7.83E-02
1.48	1.51E-02	1.26E-02	**64.00**	2.17E-07	8.00E-02
1.81	1.72E-02	1.78E-02	**72.00**	2.15E-07	8.00E-02
2.06	1.59E-02	2.20E-02	**100.00**	2.18E-07	8.00E-02
2.07	1.57E-02	2.21E-02	**168.00**	2.03E-07	8.00E-02
2.31	1.42E-02	2.57E-02	**720.00**	6.05E-08	8.01E-02
2.81	1.20E-02	3.23E-02			

Table 1.6.5-2

Control Room Attenuation Factors

Isotope	Attenuation Factor	Isotope	Attenuation Factor	Isotope	Attenuation Factor
Kr-83m	0.00E+00	**Sb-127**	2.47E-04	**Ce-144**	2.14E-06
Kr-85	1.89E-04	**Sb-129**	9.34E-04	**Np-239**	1.16E-05
Kr-85m	4.04E-05	**Te-127**	7.74E-05	**Pu-238**	1.19E-08
Kr-87	2.35E-03	**Te-127m**	5.92E-09	**Pu-239**	2.53E-07
Kr-88	3.57E-03	**Te-129**	1.85E-04	**Pu-240**	4.75E-08
Xe-131m	1.01E-06	**Te-129m**	8.82E-05	**Pu-241**	1.79E-03
Xe-133	6.33E-08	**Te-131m**	7.87E-04	**Am-241**	2.62E-08
Xe-133m	6.09E-06	**Te-132**	1.88E-05	**Cm-242**	7.33E-08
Xe-135	4.16E-05	**Sr-89**	5.25E-04	**Cm-244**	1.17E-06
Xe-135m	1.76E-04	**Sr-90**	0.00E+00	**La-140**	1.97E-03
Xe-138	2.49E-03	**Sr-91**	9.08E-04	**La-142**	3.41E-03
I-130	3.46E-04	**Sr-92**	1.28E-03	**Nb-95**	5.25E-04
I-131	1.00E-04	**Ba-139**	1.20E-04	**Nd-147**	7.69E-05
I-132	5.42E-04	**Ba-140**	1.14E-04	**Pr-143**	5.25E-04
I-133	3.16E-04	**Mo-99**	3.87E-04	**Y-90**	0.00E+00
I-134	7.87E-04	**Rh-105**	7.96E-05	**Y-91**	1.34E-03
I-135	1.64E-03	**Ru-103**	1.87E-04	**Y-92**	7.53E-04
Cs-134	3.91E-04	**Ru-105**	3.57E-04	**Y-93**	1.29E-03
Cs-136	8.12E-04	**Ru-106**	0.00E+00	**Zr-95**	5.25E-04
Cs-137	1.86E-04	**Tc-99m**	3.54E-06	**Zr-97**	1.01E-03
Cs-138	1.89E-03	**Ce-141**	3.21E-06		
Rb-86	1.34E-03	**Ce-143**	1.20E-04		

Table 1.7.2-1

Primary Coolant Source Term

Nuclide	Nuclide Group	Activity (Ci)
Kr-85m	1 – Noble Gas	1.31E+03
Kr-85	1 – Noble Gas	4.80E+02
Kr-87	1 – Noble Gas	2.09E+03
Kr-88	1 – Noble Gas	2.93E+03
Xe-131m	1 – Noble Gas	3.78E+02
Xe-133m	1 – Noble Gas	7.64E+02
Xe-133	1 – Noble Gas	3.02E+04
Xe-135m	1 – Noble Gas	1.18E+03
Xe-135	1 – Noble Gas	1.30E+04
Xe-138	1 – Noble Gas	3.46E+03
I-130	2 – Iodine	6.82E+02
I-131	2 – Iodine	7.33E+01
I-132	2 – Iodine	1.00E+03
I-133	2 – Iodine	6.91E+02
I-134	2 – Iodine	1.48E+03
I-135	2 – Iodine	1.22E+03
Cs-134	3 – Alkali Metal	5.11E+02
Cs-136	3 – Alkali Metal	4.03E+01
Cs-137	3 – Alkali Metal	4.22E+02
Cs-138	3 – Alkali Metal	1.00E+04
Rb-86	3 – Alkali Metal	6.43E+01

Table 1.7.3-1

Secondary Side Source Term

Nuclide	Nuclide Group	Activity (Ci)
I-130	2 – Iodine	1.29E+01
I-131	2 – Iodine	1.39E+00
I-132	2 – Iodine	1.90E+01
I-133	2 – Iodine	1.31E+01
I-134	2 – Iodine	2.81E+01
I-135	2 – Iodine	2.31E+01
Cs-134	3 – Alkali Metal	9.70E+00
Cs-136	3 – Alkali Metal	7.66E-01
Cs-137	3 – Alkali Metal	8.01E+00
Cs-138	3 – Alkali Metal	1.90E+02
Rb-86	3 – Alkali Metal	1.22E+00

Table 1.7.4-1

Core Isotopic Inventory for LOCA

Isotope	Core Inventory [Curies]	Isotope	Core Inventory [Curies]	Isotope	Core Inventory [Curies]
Kr-83m	8.77E+06	**Sb-129**	2.01E+07	**Ce-141**	1.23E+08
Kr-85	9.61E+05	**Sb-131**	5.67E+07	**Ce-143**	1.12E+08
Kr-85m	1.90E+07	**Te-127**	6.52E+06	**Ce-144**	1.05E+08
Kr-87	3.73E+07	**Te-127m**	1.16E+06	**Np-239**	1.39E+09
Kr-88	5.01E+07	**Te-129**	1.88E+07	**Pu-238**	1.93E+05
Xe-131m	7.55E+05	**Te-129m**	3.66E+06	**Pu-239**	2.51E+04
Xe-133	1.48E+08	**Te-131**	6.10E+07	**Pu-240**	3.88E+04
Xe-133m	4.60E+06	**Te-131m**	1.40E+07	**Pu-241**	9.82E+06
Xe-135	3.51E+07	**Te-132**	1.02E+08	**Am-241**	1.02E+04
Xe-135m	3.09E+07	**Te-133**	7.89E+07	**Cm-242**	2.71E+06
Xe-138	1.27E+08	**Te-133m**	7.02E+07	**Cm-244**	1.99E+05
I-130	1.36E+06	**Sr-89**	7.25E+07	**La-140**	1.32E+08
I-131	7.22E+07	**Sr-90**	7.47E+06	**La-142**	1.15E+08
I-132	1.05E+08	**Sr-91**	8.78E+07	**Nb-95**	1.34E+08
I-133	1.48E+08	**Sr-92**	9.40E+07	**Nd-147**	4.70E+07
I-134	1.67E+08	**Ba-139**	1.32E+08	**Pr-143**	1.11E+08
I-135	1.41E+08	**Ba-140**	1.28E+08	**Y-90**	7.75E+06
Cs-134	1.46E+07	**Mo-99**	1.35E+08	**Y-91**	9.53E+07
Cs-136	2.98E+06	**Rh-105**	7.25E+07	**Y-92**	9.51E+07
Cs-137	9.88E+06	**Ru-103**	1.14E+08	**Y-93**	1.07E+08
Cs-138	1.38E+08	**Ru-105**	7.64E+07	**Zr-95**	1.29E+08
Rb-86	1.29E+05	**Ru-106**	4.19E+07	**Zr-97**	1.23E+08
Sb-127	6.56E+06	**Tc-99m**	1.18E+08		

Table 1.7.5-1

Fuel Handling Accident Source Term

Nuclide	RADTRAD Group	RADTRAD Core Activity (Ci)
Kr-85m	1 – Noble Gas	1.90E+07
Kr-85	1 – Noble Gas	9.61E+05
Kr-87	1 – Noble Gas	3.73E+07
Kr-88	1 – Noble Gas	5.01E+07
Xe-131m	1 – Noble Gas	7.55E+05
Xe-133m	1 – Noble Gas	4.60E+06
Xe-133	1 – Noble Gas	1.48E+08
Xe-135m	1 – Noble Gas	3.09E+07
Xe-135	1 – Noble Gas	3.51E+07
Xe-138	1 – Noble Gas	1.27E+08
I-130	2 – Iodine	1.36E+06
I-131	2 – Iodine	7.22E+07
I-132	2 – Iodine	1.05E+08
I-133	2 – Iodine	1.48E+08
I-134	2 – Iodine	1.67E+08
I-135	2 – Iodine	1.41E+08
Sb-131	4 – Tellurium Group	5.67E+07
Te-131	4 – Tellurium Group	6.10E+07
Te-131m	4 – Tellurium Group	1.40E+07
Te-132	4 – Tellurium Group	1.02E+08
Te-133	4 – Tellurium Group	7.89E+07
Te-133m	4 – Tellurium Group	7.02E+07

Table 1.8.1-1

Revised Onsite Atmospheric Dispersion Factors for ANO-1

Time Period	Calculated X/Q? Value
ADV Releases to VPH-1	
0 to 2 hrs	1.89×10^{-3} sec/m^3
2 to 8 hrs	1.39×10^{-3} sec/m^3
8 to 24 hrs	6.00×10^{-4} sec/m^3
1 to 4 days	4.13×10^{-4} sec/m^3
4 to 30 days	3.28×10^{-4} sec/m^3
ADV Releases to VPH-2	
0 to 2 hrs	4.10×10^{-3} sec/m^3
2 to 8 hrs	2.59×10^{-3} sec/m^3
8 to 24 hrs	1.12×10^{-3} sec/m^3
1 to 4 days	8.32×10^{-4} sec/m^3
4 to 30 days	5.91×10^{-4} sec/m^3
MSSV Releases to VPH-1	
0 to 2 hrs	5.17×10^{-3} sec/m^3
2 to 8 hrs	3.38×10^{-3} sec/m^3
8 to 24 hrs	1.42×10^{-3} sec/m^3
1 to 4 days	1.07×10^{-3} sec/m^3
4 to 30 days	7.58×10^{-4} sec/m^3
MSSV Releases to VPH-2	
0 to 2 hrs	1.90×10^{-2} sec/m^3
2 to 8 hrs	1.23×10^{-2} sec/m^3
8 to 24 hrs	5.83×10^{-3} sec/m^3
1 to 4 days	3.80×10^{-3} sec/m^3
4 to 30 days	3.10×10^{-3} sec/m^3
Main Steam Pipe Release to VPH-1	
0 to 2 hrs	1.75×10^{-3} sec/m^3
2 to 8 hrs	1.25×10^{-3} sec/m^3
8 to 24 hrs	5.49×10^{-4} sec/m^3
1 to 4 days	3.90×10^{-4} sec/m^3
4 to 30 days	3.05×10^{-4} sec/m^3
Main Steam Pipe Release to VPH-2	
0 to 2 hrs	3.15×10^{-3} sec/m^3
2 to 8 hrs	2.16×10^{-3} sec/m^3
8 to 24 hrs	8.90×10^{-4} sec/m^3
1 to 4 days	6.61×10^{-4} sec/m^3
4 to 30 days	5.01×10^{-4} sec/m^3

Table 1.8.1-1 (continued)

Time Period	Calculated X/Q? Value
Fuel Handling Area Releases to VPH-1	
0 to 2 hrs	1.48×10^{-3} sec/m^3
2 to 8 hrs	1.07×10^{-3} sec/m^3
8 to 24 hrs	4.37×10^{-4} sec/m^3
1 to 4 days	3.04×10^{-4} sec/m^3
4 to 30 days	2.44×10^{-4} sec/m^3
Fuel Handling Area Releases to VPH-2	
0 to 2 hrs	3.46×10^{-3} sec/m^3
2 to 8 hrs	1.80×10^{-3} sec/m^3
8 to 24 hrs	8.46×10^{-4} sec/m^3
1 to 4 days	6.27×10^{-4} sec/m^3
4 to 30 days	4.42×10^{-4} sec/m^3
PRVS Releases to VPH-1	
0 to 2 hrs	4.46×10^{-3} sec/m^3
2 to 8 hrs	2.80×10^{-3} sec/m^3
8 to 24 hrs	1.31×10^{-3} sec/m^3
1 to 4 days	8.70×10^{-4} sec/m^3
4 to 30 days	6.97×10^{-4} sec/m^3
PRVS Releases to VPH-1	
0 to 2 hrs	4.36×10^{-3} sec/m^3
2 to 8 hrs	3.05×10^{-3} sec/m^3
8 to 24 hrs	1.36×10^{-3} sec/m^3
1 to 4 days	8.66×10^{-4} sec/m^3
4 to 30 days	7.36×10^{-4} sec/m^3
Containment Releases to VPH-1	
0 to 2 hrs	2.80×10^{-3} sec/m^3
2 to 8 hrs	1.75×10^{-3} sec/m^3
8 to 24 hrs	7.24×10^{-4} sec/m^3
1 to 4 days	5.98×10^{-4} sec/m^3
4 to 30 days	4.34×10^{-4} sec/m^3
Containment Releases to VPH-2	
0 to 2 hrs	3.55×10^{-3} sec/m^3
2 to 8 hrs	2.49×10^{-3} sec/m^3
8 to 24 hrs	9.85×10^{-4} sec/m^3
1 to 4 days	8.30×10^{-4} sec/m^3
4 to 30 days	6.31×10^{-4} sec/m^3

Table 1.8.1-2

Release-Receptor Combination Parameters

Release Point	Receptor Point	Release Height (m)	Receptor Height (m)	Distance (m)	Direction with respect to true north
ADV	N CR Intake	32.61	28.62	33.51	212
ADV	S CR Intake	32.61	28.65	23.67	229
MSSV	N CR Intake	30.78	28.62	20.62	228
MSSV	S CR Intake	30.78	28.65	15.26	266
Steam Pipe	N CR Intake	19.58	28.62	35.01	206
Steam Pipe	S CR Intake	19.58	28.65	24.17	219
Fuel Handling Area	N CR Intake	54.53	28.62	32.52	218
Fuel Handling Area	S CR Intake	54.53	28.65	23.77	237
PRVS Exhaust	N CR Intake	55.63	28.62	19.61	258
PRVS Exhaust	S CR Intake	55.63	28.65	21.09	295
Containment	N CR Intake	4.22(1)	28.62	20.91	246
Containment	S CR Intake	4.22(1)	28.65	17.6	264

(1) Initial vertical diffusion coefficient; containment assumed to be a diffuse area with a height of 83 feet (above the auxiliary building). The diffuse area width (containment diameter) is 123.5 feet.

Table 1.8.2-1

Offsite Atmospheric Dispersion Factors for ANO-1

Time Period	Licensed X/Q Value
Exclusion Area Boundary	
0 to 30 days	6.8×10^{-4} s/m^3
Low Population Zone	
0 to 8 hrs	1.1×10^{-4} sec/m^3
8 to 24 hrs	1.1×10^{-5} sec/m^3
1 to 4 days	4.0×10^{-6} sec/m^3
4 to 30 days	1.3×10^{-6} sec/m^3

Table 2.1-1

LOCA Input Parameters

Parameter	Input Value
Power level for analyses (102% of 2568 MWt)	2619.36 MWt
Core Average Fuel Burnup	41,045 MWD/MTU
Maximum Fuel Enrichment	4.1 w/o
Margin Added to ORIGEN Source Term Results	4%
Core Fission Product Inventory	Table 1.7.4-1
Gap Release Phase	30 sec – 0.5 hrs
Early In-Vessel Release Phase	0.5 – 1.8 hrs
Gap Release Fraction	0.05 for noble gases, halogens, and alkali metals only
Early In-Vessel Release Fractions	0.95 noble gases 0.35 halogens 0.25 alkali metals 0.05 tellurium metals 0.02 strontium and barium 0.0025 noble metals 0.0005 cerium group 0.0002 lanthanides
Iodine species distribution (%)	95.00 particulate 4.85 elemental 0.15 organic
Containment Net Free Volume	1.81×10^6 ft^3
Containment Leak Rates	0.2%/day = 24 hrs 0.1%/day > 24 hrs
Unsprayed Containment Volume	2.00×10^5 ft^3 (rounded up)
Sump Volume	54,918 ft^3
Sprayed Containment Volume	1.61×10^6 ft^3
Containment Sprayed Fractions	0.11 unsprayed 0.89 sprayed
Containment Mixing Rates	6270 cfm unsprayed to sprayed 6270 cfm sprayed to unsprayed
Spray Removal Rates Elemental Organic Particulate	 20 hr^{-1} during injection, 10 hr^{-1} during recirculation until DF=200, then 0; DF=200 at 3.1 hours No removal 2.60 hr^{-1} until DF=50 at 3.3 hours, then 0.26 hr^{-1} until DF=1000 at 16.5 hours, then 0
Spray Initiation Time (no termination)	300 sec

Table 2.1-1 (continued)

Parameter	Input Value
Natural Deposition in Unsprayed Region	No credit taken
Amount of Containment Leakage into Penetration Rooms	50%
Penetration Room Ventilation System Filter Efficiency	99% particulates 90% elemental and organic iodines 0% noble gases
Offsite X/Q	Table 1.8.2-1
Offsite Breathing Rates	Per RG 1.183 Sections 4.1.3
CR X/Q (used limiting worst-case PRVS exhaust release)	4.46E-3 s/m^3 0-2 hrs 3.05E-3 s/m^3 2-8 hrs 1.36E-3 s/m^3 8-24 hrs 8.70E-4 s/m^3 24-96 hrs 7.36E-4 s/m^3 >96 hrs
CR Breathing Rate	Per RG 1.183 Section 4.2.6
CR Occupancy Factors	Per RG 1.183 Section 4.2.6
Dose Conversion Factors (DCF)	Federal Guidance Report 11 CEDE and Federal Guidance Report 12 EDE
Control Room Ventilation System	Table 1.6.3-1
Time of CR Isolation	10 seconds
CR Unfiltered Inleakage	82 cfm

ESF Leakage Input for LOCA Analyses

ESF Leakage Rate	782 cc/hr (4.603E-4 cfm)
Fraction of Released Iodine in Sump Solution	1.0
Iodine Species Distribution in Sump	0.97 elemental 0.03 organic
Time to Recirculation	4257 sec (1.1825 hr)
Iodine Partition Coefficient for ESF Leakage (Flashing Fraction)	Calculated – 4.58% Used in analysis – 10%
Release Filtration Assumed	None

Table 2.1-2

LOCA Dose Results Summary

	EAB (worst 2-hour)	**LPZ (30 days)**	**CR (82 cfm, 30 days)**
Containment Leakage	10.454	2.5263	3.5386
ECCS Leakage	3.3744 x 10-2	2.473 x 10-2	9.8989×10^{-2}
Cloud Shine	0	0	4.8078×10^{-2}
Containment Shine	0	0	8.01×10^{-2}
Total TEDE Dose	10.4877	2.551	3.7658

Table 2.2-1

FHA Input Parameters

Parameter	Input Value
Power level for analyses (102% of 2568 MWt)	2619.36 MWt
Core Average Fuel Burnup	41,045 MWD/MTU
Maximum Average Fuel Enrichment	4.1 w/o
Margin Added to ORIGEN Source Term Results	4%
Peaking Factor	1.8
Number of Fuel Assemblies in Core	177
Number of Damaged Rods	82 (six rows)
Fuel Rod Pressure Limit	1500 psig
Water Level Above Damaged Fuel	23 feet minimum
Delay Before Fuel Movement	72 hrs
Core Fission Product Inventory	Table 1.7.5-1
Gap Fractions Released Kr-85 I-131 (modified per NUREG/CR-5009) Other isotopes	 0.30 0.12 0.10
Iodine Form in Pool Elemental Organic	 99.85% 0.15%
Iodine Form Above Pool Elemental Organic	 70% 30%
Pool Decontamination Factors Elemental Iodine Organic Iodine and Noble Gases	 286 (limited to provide overall DF = 200) 1
Offsite and CR Breathing Rate (duration of event)	3.5×10^{-4} m^3/s
Offsite X/Q (duration of event)	6.8×10^{-4} s/m^3 EAB 1.1×10^{-4} s/m^3 LPZ
Control Room X/Q (containment more limiting than fuel handling area ventilation) (duration of event)	3.55×10^{-3} s/m^3
Dose Conversion Factors (DCF)	Federal Guidance Report 11 CEDE and Federal Guidance Report 12 EDE
Control Room Ventilation System	Table 1.6.3-1
Time of CR Isolation	36 seconds
CR Unfiltered Inleakage	85 cfm

Table 2.3-1

MSLB Input Parameters

Parameter	Input Value
Power level for analyses (102% of 2568 MWt)	2619.36 MWt
Initial Primary Coolant Activity	1.0 µCi/gm DE I-131 and 72/E-bar gross activity (Table 1.7.2-1)
Activity with Pre-existing Iodine Spike	60 µCi/g I-131
Initial Secondary Coolant Activity	0.1 µCi/g I-131 (Table 1.7.3-1)
Accident-Initiated Iodine Spike Factor	500
Accident-Initiated Iodine Spike Duration	8 hrs
Primary-to-Secondary Leak Rate	0.5 gpm/SG
Time to Begin Cooldown (operator action)	30 min
Time to Isolation of Unaffected SG (initiation of DHR)	237.8 hrs
Time to Reach 212 F/Terminate Steam Release	251.8 hrs
Faulted SG Mass	6.00E+4 lbm
Flashing Fraction in Unaffected SG	0.2
Partition Coefficient (faulted SG and intact SG via flashing and vaporization)	1.0
Partition Coefficients (intact SG via steaming)	0.01 iodines 0.001 alkali metals
RCS Mass	Maximum – 2.38×10^8 gm Minimum – 2.33×10^8 gm Maximum to produce largest equilibrium appearance rate; minimum to maximize activity concentration
SG Secondary Mass	Maximum - 2.72×10^7 gm Minimum – 1.71×10^7 gm Maximum in faulted SG to maximize release; minimum in intact SG to maximize activity concentration
Iodine Form of Secondary Release Particulate Elemental Organic	 0% 97% 3%
Offsite X/Q	Table 1.8.2-1
Offsite Breathing Rates	Per RG 1.183 Sections 4.1.3

Table 2.3-1 (continued)

Parameter	Input Value
CR X/Q (faulted SG – used worst-case main steam line)	3.15E-3 s/m^3 0-2 hrs 2.16E-3 s/m^3 2-8 hrs 8.90E-4 s/m^3 8-24 hrs 6.61E-4 s/m^3 24-96 hrs 5.01E-4 s/m^3 > 96 hrs
CR X/Q (intact SG – used worst-case MSSV for first 30 min, then used worst-case ADV for each time step)	1.90E-2 s/m^3 0-0.5 hrs 4.10E-3 s/m^3 0.5-2 hrs 2.59E-3 s/m^3 2-8 hrs 1.12E-3 s/m^3 8-24 hrs 8.32E-4 s/m^3 24-96 hrs 5.91E-4 s/m^3 > 96 hrs
CR Breathing Rate	Per RG 1.183 Section 4.2.6
CR Occupancy Factors	Per RG 1.183 Section 4.2.6
Dose Conversion Factors (DCF)	Federal Guidance Report 11 CEDE and Federal Guidance Report 12 EDE
Control Room Ventilation System	Table 1.6.3-1
Time of CR Isolation	10 seconds
CR Unfiltered Inleakage	85 cfm

Table 2.4-1

SGTR Input Parameters

Parameter	Input Value
Power level for analyses (102% of 2568 MWt)	2619.36 MWt
Initial Primary Coolant Activity	1.0 µCi/gm DE I-131 and 72/E-bar gross activity (Table 1.7.2-1)
Activity with Pre-existing Iodine Spike	60 µCi/g I-131
Initial Secondary Coolant Activity	0.1 µCi/g I-131 (Table 1.7.3-1)
Accident-Initiated Iodine Spike Factor	335
Accident-Initiated Iodine Spike Duration	8 hrs
Initial Ruptured SG Tube Leak Rate	435 gpm
Primary-to-Secondary Leak Rate	150 gpd per steam generator
Time to Reactor Trip (full steaming until trip)	11 min
Time to Isolation of Faulted SG	34 min
Time to Isolation of Intact SG (initiation of DHR)	237.8 hrs
Flashing Fraction in Faulted SG	0.15
Partition Coefficients prior to Reactor Trip (release via condenser)	0.0001 iodines and alkali metals
Partition Coefficient after Reactor Trip (flashing and vaporization via MSSV or ADV)	1.0
Partition Coefficients after Reactor Trip (SG steaming via MSSV or ADV)	0.01 iodines 0.001 alkali metals
RCS Mass	Maximum – 2.38×10^8 gm Minimum – 2.33×10^8 gm Maximum to produce largest equilibrium appearance rate; minimum to maximize activity concentration
SG Secondary Mass	1.71×10^7 gm Minimum used to maximize activity concentration
Offsite X/Q	Table 1.8.2-1
Offsite Breathing Rates	Per RG 1.183 Sections 4.1.3
CR X/Q (used worst-case ADV for each time step, except from trip at 11 min to SG isolation at 34 min, used worst-case MSSV)	4.10E-3 s/m^3 0-11 min (reactor trip) 1.90E-2 s/m^3 11-34 min (faulted SG isolated) 4.10E-3 s/m^3 0.5667-2 hrs 2.59E-3 s/m^3 2-8 hrs 1.12E-3 s/m^3 8-24 hrs 8.32E-4 s/m^3 24-96 hrs 5.91E-4 s/m^3 > 96 hrs

Table 2.4-1 (continued)

Parameter	Input Value
CR Breathing Rate	Per RG 1.183 Section 4.2.6
CR Occupancy Factors	Per RG 1.183 Section 4.2.6
Dose Conversion Factors (DCF)	Federal Guidance Report 11 CEDE and Federal Guidance Report 12 EDE
Control Room Ventilation System	Table 1.6.3-1
Time of CR Isolation	11 minutes
CR Unfiltered Inleakage	85 cfm

Table 2.4-2

Iodine Equilibrium Appearance Rate

Isotope	RCS Activity (Ci)	Removal (hr^{-1})		Appearance Rate (Ci/hr)	Appearance Rate (Ci/min)
I-130	6.82E+02	0.2002	=	1.37E+02	2.28E+00
I-131	7.33E+01	0.1479	=	1.08E+01	1.80E-01
I-132	1.00E+03	0.4457	=	4.46E+02	7.43E+00
I-133	6.91E+02	0.1776	=	1.23E+02	2.05E+00
I-134	1.48E+03	0.9356	=	1.39E+03	2.32E+01
I-135	1.22E+03	0.2492	=	3.04E+02	5.07E+00

Table 2.4-3

SGTR Activity for Accident-initiated Iodine Spike

Isotope	Equilibrium Iodine Appearance Rates (Ci/min)	Fuel Activity Modeled in *.nif file (Ci)
I-130	2.28E+00	2.28E+10
I-131	1.80E-01	1.80E+09
I-132	7.43E+00	7.43E+10
I-133	2.05E+00	2.05E+10
I-134	2.32E+01	2.32E+11
I-135	5.07E+00	5.07E+10

Table 2.6-1

CREA Input Parameters

Parameter	Input Value
Power level for analyses (102% of 2568 MWt)	2619.36 MWt
Core Average Fuel Burnup	41,045 MWD/MTU
Maximum Fuel Enrichment	4.1 w/o
Margin Added to ORIGEN Source Term Results	4%
Core Fission Product Inventory	Table 1.7.4-1
Fuel Failure (rods in DNB)	14%
Peaking Factor	1.8
Fission Product Gap Fractions (RG 1.183, Appendix H, Section 1)	0.10 noble gases and iodines 0.12 alkali metals
Containment Release Iodine Species Distribution	95% particulate 4.85% elemental 0.15% organic
Secondary Release Iodine Species Distribution	0% particulate 97% elemental 3% organic
Primary-to-Secondary (P-S) Leak Rate (secondary release model)	300 gpd
Duration of Secondary Release Event (switch to DHR system)	38.25 hrs
Flashing and Vaporizing Fraction of P-S Leakage during Cooldown (no partitioning)	0.15
Containment Net Free Volume	1.81×10^6 ft^3
Containment Leak Rates	0.2%/day = 24 hrs 0.1%/day > 24 hrs
Sedimentation Coefficient (Particulates only)	0.1/hr until DF = 1000, then 0
Containment Spray	No credit taken
Penetration Room Ventilation System	No credit taken
Partition Coefficients of P-S Leakage Mixed with Secondary Liquid Inventory	0.01 iodines 0.001 alkali metals
Steam Release Rates from Secondary	2.5815E+6 g/min 0-2 hrs 5.6977E+5 g/min 2-38.25 hrs
RCS Mass	2.332×10^8 gm Minimum used to maximize activity concentration
SG Secondary Mass	3.411×10^7 gm Minimum for 2 SGs used to maximize activity concentration
Offsite X/Q	Table 1.8.2-1

Table 2.6-1 (continued)

Parameter	Input Value
Offsite Breathing Rates	Per RG 1.183 Sections 4.1.3
CR X/Q (containment release)	3.55E-3 s/m^3 0-2 hrs 2.49E-3 s/m^3 2-8 hrs 9.85E-4 s/m^3 8-24 hrs 8.30E-4 s/m^3 24-96 hrs 6.31E-4 s/m^3 > 96 hrs
CR X/Q (secondary release) (used worst-case MSSV for first 30 min, then used worst-case ADV for each time step)	1.90E-2 s/m^3 0-0.5 hrs 4.10E-3 s/m^3 0.5-2 hrs 2.59E-3 s/m^3 2-8 hrs 1.12E-3 s/m^3 8-24 hrs 8.32E-4 s/m^3 24-96 hrs 5.91E-4 s/m^3 > 96 hrs
CR Breathing Rate	Per RG 1.183 Section 4.2.6
CR Occupancy Factors	Per RG 1.183 Section 4.2.6
Dose Conversion Factors (DCF)	Federal Guidance Report 11 CEDE and Federal Guidance Report 12 EDE
Control Room Ventilation System	Table 1.6.3-1
Time of CR Isolation	10 seconds
CR Unfiltered Inleakage	82 cfm

Table 2.6-2

CREA Steam, Iodine and Alkali Metal Release Rates

Time (hours)	Steam Release Rate (gm/min)	Iodine Release Rate(1) (gm/min)	Alkali Metal Release Rate(2) (gm/min)
0-2	2.5815×10^6	2.5815×10^4	2.5815×10^3
2-38.25	5.6977×10^5	5.6977×10^3	5.6977×10^2

(1) Assumes partition factor of 100 for iodines

(2) Assumes moisture carryover of <0.1% for alkali metals

Table 3-1

Arkansas Nuclear One, Unit No. 1
Summary of Alternative Source Term Analysis Results

CASE	Assumed Unfiltered CR Inleakage (cfm)	EAB Dose(1) (rem TEDE)	LPZ Dose(2) (rem TEDE)	CR Dose(2) (rem TEDE)
LOCA	82	10.49	2.56	3.77
SGTR Pre-existing Iodine Spike	85	2.20	0.37	2.33
MSLB Pre-existing Iodine Spike	85	0.45	0.19	1.84
Acceptance Criteria		**25.0(3)**	**25.0(3)**	**5.0(4)**
SGTR Accident-initiated Iodine Spike	85	1.26	0.23	1.00
MSLB Accident-initiated Iodine Spike	85	2.07	1.05	3.72
Acceptance Criteria		**2.5(3)**	**2.5(3)**	**5.0(4)**
FHA 72-hr decay	85	1.40	0.25	1.00
CREA Containment Release	82	4.73	2.28	3.40
CREA Secondary Release	82	3.03	1.64	4.95
Acceptance Criteria		**6.3(3)**	**6.3(3)**	**5.0(4)**

(1) Worst 2-hour dose
(2) Integrated 30-day dose
(3) RG 1.183, Table 6
(4) 10 CFR 50.67

Attachment 3

To

1CAN040802

Markup of ANO-1 Safety Analysis Report

1.2 DESIGN SUMMARY

1.2.1 SITE CHARACTERISTICS

The site consists of approximately 1,100 acres providing for a 0.65 mile exclusion radius. The site is characterized by remoteness from population centers; freedom from flooding; sound, hard rock for structure foundations; a reliable network for emergency power; and favorable conditions of hydrology, geology, seismology, and meteorology.

1.2.2 POWER LEVEL

The design and license power level for the reactor core will be 2,568 MWt, and all physics and core thermal hydraulics information in this report is based on that power level. An additional 21 MWt is available to the cycle from the contribution of the reactor coolant pumps resulting in a design gross electrical output of 911.5 MWe.

1.2.3 PEAK SPECIFIC POWER LEVEL

For cycle one, the peak specific power level in the fuel for operation at 2,568 MWt results in a maximum thermal output of 17.63 kW/ft of fuel rod. This value is comparable with other reactors of this size presently under construction, and with reactors in the 400-500 MWe class such as San Onofre, Ginna, and Connecticut Yankee, and therefore did not represent an extrapolation of technology.

1.2.4 CONTAINMENT SYSTEM

The reactor building is a fully continuous reinforced concrete structure in the shape of a cylinder on a flat foundation slab with a shallow domed roof. The cylindrical portion is prestressed by a post-tensioning system consisting of horizontal and vertical tendons. The dome has a 3-way post-tensioning system. Hoop tendons are placed in 3-240 degree systems using three buttresses that run the full height of the cylinder as anchorages. The foundation slab is conventionally reinforced with high-strength reinforcing steel. A continuous access gallery is provided beneath the base slab for installation and inspection of vertical tendons. A welded steel liner is attached to the inside face of the concrete shell to ensure a high degree of leak tightness. The base liner has been installed on top of the structural slab and was covered with concrete. The structure provides shielding for both normal and accident conditions.

The reactor building will completely enclose the entire reactor and the Reactor Coolant System and ensure that an acceptable upper limit for leakage of radioactive materials to the environment would not be exceeded even if gross failure of the Reactor Coolant System were to occur. The building encloses the Pressurized Water Reactor, steam generators, reactor coolant loops and portions of the auxiliary systems and engineered safeguard systems.

1.2.5 ENGINEERED SAFEGUARDS

The Engineered Safeguards (ES) have sufficient redundancy of component and power sources such that under the conditions of the worst postulated Loss of Coolant Accident (LOCA) the system can maintain the integrity of the containment and keep the exposure of the public below the limits of 10 CFR 50.67~~100~~.

1.4.14 CRITERION 18 - INSPECTION AND TESTING OF ELECTRICAL POWER SYSTEMS

Electrical power systems important to safety shall be designed to permit periodic inspection and testing of important areas and features, such as wiring, insulation, connectors, and switchboards, to assess the continuity of the systems and the condition of their components. The systems shall be designed with a capability to test periodically (1) the operability and functional performance of the components of the systems, such as onsite power sources, relays, switches, and buses and (2) the operability of the systems as a whole and, under conditions as close to design as practical, the full operation sequence that brings the systems into operation, including operation of applicable portions of the protection system, and the transfer of power buses, the offsite power system, and the onsite power system.

Discussion

All important passive components of the emergency power system such as wiring, insulation, connections, and switchboards are designed to permit appropriate periodic inspection and testing to assess their continuity and condition.

System design provides for the following periodic Emergency Diesel Generator electrical tests:

A. Each diesel generator is manually started each month and demonstrated to be ready for loading within 15 seconds. On this manual start, the signal initiating the start of the diesel is varied from one test to another to verify all starting circuits are operable. The generator is synchronized from the control room and loaded.

B. A test is conducted at least once each 18 months to demonstrate the overall automatic operation of the emergency power system. The test is initiated by a simulated simultaneous loss of normal and standby power sources and a simulated ES signal. Proper operations are verified by bus load shedding and automatic starting of selected motors and equipment to establish that restoration with emergency power has been accomplished within a limited time interval, approximately 70 seconds.

1.4.15 CRITERION 19 - CONTROL ROOM

A control room shall be provided from which actions can be taken to operate the nuclear power unit safely under normal conditions and to maintain it in a safe condition under accident conditions, including LOCAs. Adequate radiation protection shall be provided to permit access and occupancy of the control room under accident conditions without personnel receiving radiation exposure in excess of 5 TEDE~~rem whole body or its equivalent to any part of the body~~, for the duration of the accident.

Equipment at appropriate locations outside the control room shall be provided (1) with a design capability for prompt hot shutdown of the reactor, including necessary instrumentation and controls to maintain the unit in a safe condition during hot shutdown and (2) with a potential capability for subsequent cold shutdown of the reactor through the use of suitable procedures.

Discussion

The control room is designed to operate the nuclear power unit safely under normal conditions and to maintain it in a safe condition under accident conditions. As discussed in Sections 11.2.4 and 14.2.2.6, adequate radiation protection has been provided to insure that radiation exposures to personnel occupying the control room ~~during the 30-day period~~ following an ~~maximum hypothetical~~ accident will not exceed 5 rem TEDE~~whole body or its equivalent to any part of the body~~, for the duration of the accident.

The control room is designed so that one man can operate the unit during normal steady state conditions. During other operating conditions, other operators will be available to assist the control operator. In the event that the control room must be evacuated, equipment at appropriate locations outside the control room is provided with a design capability for prompt hot standby, > 525 degrees F of the reactor, including necessary instrumentation and controls to maintain the unit in a safe condition during hot standby, > 525 degrees F. In addition, the potential capability for subsequent cold shutdown will be provided for use in the event that the control room has to be evacuated and is not accessible for a long period of time under the conditions where no accident has taken place and the control room is still intact.

The following design features are provided to insure continuous control room access:

A. Adequate shielding to maintain tolerable radiation levels in the control room during a Design Basis Accident (DBA).

B. Three points of entry from outside the control room.

C. Nonflammable construction.

D. Cables and switchboard wiring pass flame test per IPCEA publication S-61-402 and NEMA WC5-1961.

E. Combustibles such as furniture have been evaluated.

F. Smoke protection and detection equipment is provided.

The Reactor Protection System is designed to be essentially fail-safe without operator control. Thus, safe shutdown can be achieved without operator action.

If the reactor is tripped, and the control room evacuated, reactor decay heat is removed by the steam generators, with steam exhausting through the main turbine bypass valve and/or atmospheric dump valve. Either the main or an emergency feedwater pump will continue to supply feedwater to the steam generators. Additionally, a motor driven auxiliary feedwater pump, normally used for startup and connected in parallel with the main feedwater pumps, could be used to supply feedwater to the steam generators. Under these conditions, a balance will be maintained between heat removal and decay heat generation, the RCS will be maintained at normal hot standby, > 525 degrees F temperature, and no significant makeup will be required for several hours. Any makeup can be supplied by operating the makeup pump, taking suction from the Borated Water Storage Tank and discharging through the normal makeup system lineup. These makeup operations can be conducted locally and the controls and instrumentation are adequate to maintain the plant in a safe hot standby, > 525 degrees F condition during the period of control room inaccessibility.

Liquid and solid wastes are normally processed in batches for offsite disposal. Gaseous waste released to the environment is monitored and discharged to assure tolerable activity levels on the site and at the exclusion distance.

The Gaseous Waste System can store accumulated gas generated during operation. The contents of the decay tanks are periodically sampled, and a release rate is established consistent with the prevailing environmental conditions. In-line monitoring provides a continuous check on the release of activity.

Permanently installed area detectors and the plant vent detectors monitor the discharge levels. In addition, portable monitors are available on site for supplemental surveys if necessary.

Radioactive liquid leakage into the cooling water systems is detected by monitors. These monitors are used for normal operational protection as well as for accident conditions. Detectors monitor the gaseous activity prior to discharge.

1.4.52 CRITERION 61 - FUEL STORAGE AND HANDLING AND RADIOACTIVITY CONTROL

The Fuel Storage and Handling, Radioactive Waste, and other systems which may contain radioactivity shall be designed to assure adequate safety under normal and postulated accident conditions. These systems shall be designed (1) with a capability to permit inspection and testing of components important to safety, (2) with suitable shielding for radiation protection, (3) with appropriate containment, confinement, and filtering systems, (4) with a residual heat removal capability of a reliability and testability that reflects the safety importance of decay heat and other residual heat removal, and (5) to prevent significant reduction in fuel storage coolant inventory under accident conditions.

Discussion

The Fuel Storage and Handling, Radioactive Waste, and other systems which may contain radioactivity are designed to assure adequate safety under normal and postulated accident conditions. The systems have the capability for periodic inspection and testing of components important to safety. The shielding design considerations are discussed in Section 11.2.3.

Damage to a fuel assembly in the spent fuel pool releasing radioactive gases to the auxiliary building was evaluated. ~~With filtration and~~ ~~E~~exhaust of these gases through the plant vent without filtration results in~~, the~~ offsite doses~~ is well~~ below the 10 CFR 50.67 acceptance criteria~~100 guidelines~~.

Accidents assuming rupture of a waste gas tank have been evaluated and the consequences of the release were~~are~~ shown to be well below the guideline values of 10 CFR 100.

Radioactive liquid effluent which might accidentally leak into the Intermediate Cooling Water System will be detected by a radiation monitor. Any accidental leakage from liquid waste storage tanks will be collected in the auxiliary building sump and transferred to other tanks to prevent release to the environment.

A small purification loop removes fission products and other contaminants in the spent fuel storage pool water. The basis for the design of the Spent Fuel Cooling System reflects the importance of this system to safety. The capability for appropriate testing has been provided.

The shutdown condition assumes that the reactor core has been operating at 2,568 MWt for at least 1,000 hours. At 1,000 hours the fission product inventory approaches the infinite operation case.

11.2.4 SHIELDING DESIGN DESCRIPTIONS

The different areas of radiation protection are listed by specific location or building for convenience.

11.2.4.1 Main Control Room

The original DBA defining the protection required for the plant main control room was~~is~~ the Maximum Hypothetical Accident (MHA). ANO-1 has since completed alternate source term dose analyses using the guidance of NRC Regulatory Guide 1.183. These analyses show the dose to the control room operators following any postulated event will be below the 5 rem TEDE acceptance criteria of 10 CFR 50.67. Except as noted, the following discussion continues to describe the original MHA analysis and is retained for historical purposes.~~The accident condition is described in Chapter 14 of this report.~~ The main control room design was based on the airborne fission product inventory in the reactor building following an MHA. ~~The activity inventory of noble gases and halogens is shown in Chapter 14.~~ Containment and control room shielding have been designed such that the doses to operating personnel for the duration of the MHA are less than 5 rem whole body or its equivalent to any part of the body.

The dose to personnel occupying the control room continuously for 30 days from the onset of the accident derives primarily from two sources:

A. Direct radiation from radioactive fission products inside the containment.

B. Radiation from the cloud formed by the leakage of fission products out of the containment.

The dose computed for direct containment shine to the control room personnel makes several assumptions:

A. The reactor has been operating for a long time such that the fission product inventory is the saturation inventory given by $q_s = (0.865 \times 10^6)(P_0)(V_0)$ Curies

where:

q_s = the saturation inventory of isotope i

P_0 = reactor power (Mwt) = 2,568 Mwt

V_0 = fission yield for isotope i

B. One hundred percent of the noble gases, 50 percent of the halogens and one percent of the solid fission products are released to the containment.

C. The isotopes in "B" above are uniformly distributed in the containment, taken to be a cylinder with free volume of 1.9×10^6 ft^3. No credit is taken for shielding by the internal structures in the containment. Credit is taken for the 3-foot, 9-inch containment wall.

D. No credit is taken for containment leakage, plateout of iodines or effectiveness of the containment spray system in removing fission products from the containment atmosphere. The only decrease in source strength is decay.

The 30-day integrated dose from containment shine is 210 mrem. The 30-day integrated containment shine dose calculated using alternate source terms is 80 mrem following a LOCA.

In determining the dose from cloud shine all of the above assumptions apply except that the containment leakage is conservatively assumed to be 0.2%/day for the duration of the accident.

The leakage is taken to be at the control room roof level and passed directly over the control room, continuously for 30 days. The dose to personnel from cloud shine is 950 mrem. The 30-day integrated cloud shine dose calculated using alternate source terms is 48 mrem following a LOCA.

The total 30-day dose from containment shine and cloud shine is 685 mrem.

The Emergency Air Conditioning and Filtration Systems provided for the control room are described in Section 9.7.2.~~ The evaluation of control room operator doses given in Section 14.2.2.6 shows that the dose received during the 30 days following a postulated LOCA is less than the limits of 10CFR50 General Design Criterion 19.~~

11.2.4.2 Reactor Building Shell

The reactor building shell is a reinforced prestressed concrete structure which serves two main shielding purposes:

A. During normal operation, it shields the surrounding plant structures and yard areas from radiation originating at the reactor vessel and the primary loop components. Together with additional shielding inside the containment, the concrete shell will reduce radiation levels outside the shell to below 1.0 mrem/hr in those areas which are occupied by personnel either on a permanent or routine basis.

B. In the event of an accident~~ MHA~~, the shell shielding will reduce plant and offsite radiation intensities emitted directly from released fission products below levels as defined by: (1) onsite occupancy limits of 5 rem TEDE~~whole body dose and 30 rem thyroid~~ and, (2) exclusion distance acceptance criteria of 10 CFR 50.67~~limits of 10 CFR 100~~. The concrete roof of the reactor building has been specifically designed to reduce radiation contributions from sky-shine. Activities inside the reactor building following an accident~~during an MHA~~ and the off-site doses associated with the accident~~MHA~~ are given in Chapter 14.

11.2.4.3 Reactor Building Interior

During reactor operation, access to most areas inside the containment will be prohibited due to high radiation levels.

Large sections over the steam generator compartments and the refueling canal are open and unshielded. These openings cause a high dose rate at the refueling floor during reactor operation. Neutrons streaming out of these areas increase the containment internal dose rate. The reactor vessel which is the major radiation source is surrounded by a concrete shield.

14.1.2.8 Loss of Electric Power

14.1.2.8.1 Identification of Cause

The unit is designed to withstand the effects of loss of electric load or electric power. Emergency power systems are described in Chapter 8. Two types of power losses are considered:

A. A loss of load condition caused by separation of the unit from the transmission system.

B. A hypothetical condition resulting in a complete loss of all system and unit power except the unit batteries.

14.1.2.8.2 Reactor Protection Criteria

The criteria for reactor protection for this accident are:

A. Fuel damage must not occur.

B. RCS pressure shall not exceed code pressure limits.

C. ~~(1) Resultant doses for loss of all AC power shall not exceed 10 CFR 100 limits.~~

~~(2)~~ Resultant doses for loss of load shall not exceed 10 CFR 20 limits.

14.1.2.8.3 Results of Loss-of-Load Conditions Analysis

The unit has been designed to accommodate a loss-of-load condition without a reactor or turbine trip. Under circumstances where the external system deteriorates, as indicated by system frequency deviation, the unit will automatically disconnect from the transmission system. When this occurs, a runback signal causes an automatic power reduction to 15 percent reactor power. The runback may not be successful if the reactor high pressure setpoint is reached, at which time a reactor trip would occur. If successful, other actions that occur include:

A. All vital electrical loads, including the Reactor Coolant Pumps, condenser circulating water pumps, condensate pumps, and other auxiliary equipment, will continue to obtain power from the unit generator. Feedwater is supplied to the steam generators by the steam-driven feedwater pumps.

B. As the electric load is dropped, the electro-hydraulic system closes the governor valves. The unit frequency will change momentarily, but the governor will rapidly restore the set frequency.

C. During closure of the turbine governor valves, steam pressure increases to the turbine bypass valve setpoint and may increase to the steam system safety valve setpoint. Steam is relieved to the condenser and to the atmosphere. Steam venting to the atmosphere occurs for a brief period following loss of load from 100 percent initial power until the turbine bypass can handle all excess steam generated. The amount of steam relieved to the atmosphere is shown in Table 14-16. Steam relief permits energy removal from the RCS to prevent a high pressure reactor trip. The initial power runback is to 15 percent reactor power, which is a higher power level than needed for the unit auxiliary load. This allows sufficient steam flow for regulating turbine speed control. Excess steam above unit auxiliary load requirements is rejected to the condenser by the turbine bypass valves.

D. During the short interval while the turbine speed is high, the vital electrical loads connected to the unit generator will undergo speed increases in proportion to the generator's frequency increase. All motors and electrical gear so connected will withstand the increased frequency.

E. After the turbine generator has been stabilized at auxiliary load and set frequency, the station operator may reduce reactor power to the auxiliary load as desired.

The loss-of-load accident does not result in fuel damage or excessive pressures on the RCS. There is no resultant radiological hazard to station operating personnel or to the public from this accident, since only secondary system steam is discharged to the atmosphere.

Unit operation with one percent defective fuel and a 1 gpm primary-to-secondary tube leak has also been evaluated for this transient. The steam relief accompanying a loss-of-load accident would not change the whole body dose. The whole body dose is primarily due to the release of xenon and krypton and is considered to be negligible. Release of these gases is not increased by the steam relief because, even without relief, all of these gases are assumed to be released to the atmosphere through the condenser vacuum pumps. The rate of release of iodine during relief would increase because the iodine is released in steam vented directly to the atmosphere rather than through the condenser and unit vent. The iodine contained in the 1 gpm primary coolant leakage is assumed to be carried off in the secondary steam flow of 5.56×10^6 lbs/hour at the rate at which it enters the secondary system. Table 14-16 gives the quantity of steam released, the activity of the iodine contained in the steam, and the resulting site boundary thyroid dose. The relative concentration factor from Section 2.3 is based on mixing of the discharge in the wake of the reactor building and a wind speed averaged over the height of the reactor building.

14.1.2.8.4 Results of Complete Loss of All Unit AC Power

The second power loss considered is the hypothetical case where all unit power except the unit batteries is lost. Loss of all AC power is regarded as an incredible occurrence and was not a basis for the original plant design since in addition to the normal AC power supplies, redundant fast starting emergency diesels are provided. Addition of the Alternate AC Power Source per 10 CFR 50.63 makes a loss of all AC power even more incredible. However, analysis of this hypothetical event demonstrates that even in the absence of all sources of AC power, decay heat can be removed. The sequence of events and the evaluation of consequences for this accident are:

A. A loss of power results in gravity insertion of the control rods and trip of the turbine valves.

B. After the turbine stop valves trip, excessive temperatures and pressures in the RCS are prevented by excess steam relief through the main steam line safety valves and the atmospheric dump valves (turbine bypass valve steam relief is lost due to loss of power to the condenser cooling water circulating pumps). Excess steam is relieved until the RCS temperature is below the saturation temperature for the steam generator corresponding to the pressure setpoint of the atmospheric dump valves. Thereafter, the atmospheric dump valves are used to remove decay heat.

C. The RCS flow decays without the occurrence of fuel damage. Decay heat removal after coastdown of the Reactor Coolant Pumps is provided by the natural circulation characteristics of the system. This capability is discussed in the loss-of-coolant-flow evaluation (Section 14.1.2.6).

D. The Condensate Storage Tank provides emergency feedwater to the steam generators with the EFIC system raising the water level in the steam generators at a controlled rate until the 26 foot natural circulation setpoint is reached. The Condensate Storage Tank minimum inventory is 107,000 gallons, when only Unit 1 is aligned, or 267,000 gallons when both units are aligned.

E. The turbine-driven emergency feed pump normally takes suction from the Condensate Storage Tank and is driven by steam from either or both steam generators. The Emergency Feedwater System is discussed in Section 10.4.8. All required valves in the Emergency Feedwater System can be operated automatically since they are DC powered.

The following is a description of the necessary loads which are connected to the station batteries and which would be operable following a loss of AC power:

A. Four inverters supplying the necessary Nuclear and Non-Nuclear Instrumentation, Reactor Protection System, Engineered Safeguards Actuation System, and Emergency Feedwater Initiation and Control system.

B. Emergency lighting panels.

C. DC distribution panels.

D. DC Motor Control Centers

The above loads provide sufficient power for indication and control to maintain the reactor in a safe shutdown condition for a minimum period of two hours with an expected period of four hours. In the event a longer battery life is required, certain redundant loads can be disconnected.

In view of the foregoing sequence, the loss of all unit power does not result in fuel damage or excessive pressure in the RCS. ~~There is no resultant radiological hazard to plant operating personnel or to the public from this accident, since only secondary system steam is discharged to the atmosphere.~~

~~This transient has been evaluated further under conditions where the plant is assumed to have been operating with both one percent failed fuel and a 1 gpm tube leakage in one steam generator. This operation continues until decay heat can be removed by the steam generator with no tube leakage, and the atmospheric dump valve associated with the leaking generator is closed. This results in the following sequence of events:~~

~~A. It is assumed that the operator further opens the atmospheric dump valves 10 minutes after the loss of power.~~

~~B. Cooling down at the maximum available rate requires an additional 45 minutes to reach a temperature below the saturation temperature corresponding to the setpoint pressure for the steam safety valve having the lowest setting.~~

~~C. The steam generator with tube leakage is then completely isolated by closing its atmospheric dump valve, and the other steam generator is used to remove decay heat.~~

~~As in the loss-of-load transient evaluation, the whole body dose does not change because of steam relief. The total integrated thyroid dose is shown in Table 14-17. The activity of the iodine contained in the steam was calculated by the same method used in the loss-of-load accident above.~~

14.1.2.9 Turbine Overspeed

14.1.2.9.1 Background

There is a very low probability that the turbines used at ANO-1 will experience a major structural failure of a rotating part resulting in missile-like pieces leaving the turbine casing (see SAR References 1 through 13).

This is based upon:

A. Present manufacturing techniques - factory inspection and test procedures ensure sound discs with mechanical properties equal to or exceeding the specified levels.

B. Redundant control system - the main speed governing system will normally hold the turbine speed within set limits. An overspeed trip device backed by a redundant overspeed trip device provides three lines of protection in all.

C. Routine testing - testing of the main steam valves and the overspeed trip devices while the unit is carrying load.

D. Turbine Disc Inspection consisting of: (1CAN098109)

   1. Inspection of new discs at the first refueling outage or before any postulated crack would grow to more than ½ the critical depth;

   2. Discs previously inspected to be free of cracks or that have been repaired to eliminate all indications should be per Item 1 above, calculating crack growth from the time of the last inspection; and

   3. Discs operating with known and measured cracks should be reinspected before ½ the time calculated for any crack to grow to ½ the critical crack depth.

   NOTE: Inspection schedules may be varied to coincide with scheduled outages.

E. Use of fully integrated LP rotor - During the 1R8 Refueling Outage, a fully integrated type rotor was installed in the "1" section of the low pressure turbine. This rotor differs from the original "2" section of the low pressure turbine in that the original "2" rotor was a built up design with shrunk on "discs" and the fully integrated design is a one piece forging design (see section F). Westinghouse Electric Corporation's position is that the missile generation criteria for the shrunk on wheels does not apply to the fully integrated design because a failure for the fully integrated rotor would assume a situation where the rotor reaches a high enough overspeed to cause the centrifugal stresses to exceed the material strength. Calculations performed by Westinghouse show that the required overspeed cannot be reached even if loss of load occurs at full load conditions. The amount of steam entering the turbine from the time the load is lost to the time the stop valves close is insufficient to drive the turbine to the required overspeed. If the valves didn't close, other turbine components would fail (such as last stage blades, generator wedges, bearings if high vibration occurs, etc.) at speeds below the rotor burst speed and again eliminate the potential for any turbine missiles.

14.2 STANDBY SAFEGUARDS ANALYSIS

14.2.1 SITUATIONS ANALYZED AND CAUSES

This section presents an analysis of accidents in which one or more of the protective barriers are not effective and standby safeguards are required. All accidents evaluated are based on the rated core power level of 2,568 MWt. Table 14-18 summarizes the potential accidents studied.

14.2.2 ACCIDENT ANALYSIS

14.2.2.1 Steam Line Failure

14.2.2.1.1 Identification of Cause

Analyses were performed to determine the effects and consequences of loss of secondary coolant due to a double-ended steam line rupture. The main steam header piping (24″ and 36″) between the main steam block valves and the high pressure turbine stop valves, and the B31.1.0 portion of the main steam piping system (8″) between the atmospheric dump valve isolation valves and the dump valves themselves, is designed and constructed to meet ANSI B31.1.0 requirements with 100 percent volumetric examination of welds. The portion that penetrates the reactor building out through the main steam block valves is designed and constructed to meet the requirements of ANSI B31.7, Class II, or later appropriate ASME Section III Code sections provided that they have been reconciled. In addition, the main steam line from the steam generator outlet to the turbine has been analyzed and found adequate to withstand seismic loadings. Consequently the probability of a break in these lines is considered very low.

14.2.2.1.2 Reactor Protection Criteria

The criteria for reactor protection for this accident are:

A. The core will remain intact for effective core cooling.

B. Loss of reactor coolant boundary integrity resulting from steam generator tube failure due to the loss of secondary side pressure and resultant temperature gradients will not occur.

C. Resultant doses will not exceed 10 CFR 50.67~~100~~ limits.

14.2.2.1.3 Analysis and Results

14.2.2.1.3.1 Accident Dynamics

The loss of secondary coolant due to a failure of a steam line between the steam generator and the turbine causes a decrease in steam pressure and thus places a demand on the control system for increased feedwater flow. Increased feedwater flow, accompanied by steam flow through the turbine stop valves and the break, lowers the average reactor coolant temperature. The Emergency Feedwater Instrumentation and Control (EFIC) system (see Sections 7.1.4 and 7.2.4 is designed to protect against the consequences of a simultaneous blowdown of both steam generators. Upon detection of a steam line break, the EFIC system automatically initiates action to isolate each affected steam generator by closing its main steam isolation valve (MSIV) and its main feedwater isolation valve (MFIV).

14.2.2.1.4 Resultant Doses

The resultant doses from this accident are calculated by assuming that:

A. The unit has been operating with a maximum of 1 gpm steam generator tube leakage.

B. The unit has been operating at the maximum primary and secondary activity limits allowed by Technical Specifications~~with 1 percent defective fuel rods~~.

C. The steam line break occurs between the reactor building and a turbine stop valve.

D. Reactor coolant leakage into the faulted steam generator continues for 251.8~~4.5~~ hours until the RCS can be cooled down and depressurized and the leakage terminated.

E. Either an accident-initiated iodine spike (GIS) occurs or a pre-existing iodine spike (PIS) exists~~The steam line break isolation and control portion of the EFIC system does not function at all~~.

The steam line failure is assumed to result in the release of the activity contained in the steam generator inventory, the activity contained in the feedwater, and the activity contained in the reactor coolant leakage. (See Table 14-21.) The iodine, primarily resulting from reactor coolant leakage in the cooldown period following the steam line break, is assumed to be released directly to the atmosphere. Atmospheric dilution is calculated using the relative concentration developed in Section 2.3. Using these assumptions, TEDE~~the total integrated~~ dose~~s to the thyroid~~ have~~s~~ been calculated~~.~~ (s~~S~~ee Table 14-21~~.~~). The~~is~~e doses are~~is~~ less than~~several orders of magnitude below~~ the acceptance criteria~~guideline value~~ of 10 CFR 50.67~~100. These conclusions were also found to be bounding of plant operation with the replacement OTSGs (Reference 94).~~

14.2.2.1.5 Building Pressure

The resultant mass and energy release to containment are taken from the above analysis using TRAP2 results (see Figures 14-21F and 14-21G) and are summed in Table 14-19b. A detailed thermal-hydraulics analysis was performed using the blowdown data in the ANO-1 DBA COPATTA model described in Section 14.2.2.5.5. The results from this analysis are shown in Figures 14-21H and 14-21I, and summarized in Table 14-20. A peak reactor building pressure of 51.1 psig occurs at 74 seconds. The peak pressure is within the DBA pressure of 54.0 psig and the reactor building design pressure of 59 psig. The MSLB temperature profile, although it exceeds the DBA temperature profile for less than 3 minutes early in the transient, is short lived and is considered bounded by the DBA profile.

Parameters used in the MSLB containment analysis along with those which are different from that assumed in DBA analysis are given in Table 14-19d. A high-high containment pressure setpoint of 36.7 psig is assumed for reactor building spray actuation. The spray response time is assumed to be 105.868 seconds based on offsite power being available as was determined above to be the most limiting case (see Section 14.2.2.1.3.3). Reactor building coolers are assumed to start at 300 seconds with the performance curve given in Figure 14-110. Only one train of sprays and coolers are modeled. This is conservative due to the single failure of the MFIV already assumed in developing the blowdown data.

At the end of Cycle 19, the original OTSGs were replaced. In support of Cycle 20 operation, an evaluation of the containment pressure/temperature response with the replacement OTSGs for LOCAs and MSLBs was performed and is documented in Reference 94. It was concluded that the current post-LOCA response would remain bounding for the replacement OTSGs. For the steam line break, the containment pressure response with the replacement OTSGs was also bounded by the current analysis. The post-MSLB temperature response with the replacement OTSGs would be worse. EOI has adopted NUREG-0458 into the ANO-1 licensing basis which recognizes that the post-MSLB atmosphere may become superheated, but the temperature spike is of such short duration that the thermal lag of any SSC inside containment will not increase significantly. Consequently, the initial temperature peak does not define operating limits on any system, structure, or component (SSC) and the long-term containment temperature (which is essentially the saturation temperature) dominates the temperature response of SSCs. Therefore, as long as the peak MSLB pressure is less than the peak pressure following a LOC~~CO~~A, the temperature response of SSCs will still be defined by the LOCA.

14.2.2.1.6 Conclusions

The ANO-1 plant response to a double-ended steam line break with a failure of the main feedwater isolation valve on the affected side has been shown to be acceptable. The analysis has shown the acceptability of a hot zero power moderator temperature coefficient of -3.5×10^{-4} (Δ k/k)/°F. The predicted maximum return to power assuming a conservative core kinetics model is below that necessary to exceed fuel design limits. The maximum temperature differential that occurs in the steam generator does not produce excessive stresses, and the integrity of the steam generator is maintained. The resultant doses are within acceptable limits.

14.2.2.2 Steam Generator Tube Failure

14.2.2.2.1 Identification of Cause

The resultant doses associated with steam generator tube leakage and subsequent release to the environment are evaluated in the preceding sections. The complete severance of a steam generator tube has also been evaluated. For this occurrence, activity contained in the reactor coolant would be released to the secondary system. Some of the radioactive noble gases and iodine would be released to the atmosphere through the main steam safety valves, atmospheric dump valves, and the condenser air removal system.

14.2.2.2.2 Reactor Protection Criteria

The criteria for reactor protection for this accident are:

A. Resultant doses shall not exceed 10 CFR 50.67~~100~~ limits.

B. Additional loss of reactor coolant boundary integrity shall not occur due to resultant temperature gradients.

14.2.2.2.3 Analysis and Results

In analyzing the consequences of this failure, the following sequence of events is assumed to occur (input parameters are shown in Table 14-22 and results are summarized in Table 14-23):

A. A double-ended rupture of one steam generator tube occurs with unrestricted discharge from each end.

B. The initial leak rate exceeds the normal makeup to the RCS, and system pressure decreases. No initial operator action is assumed, and a low RCS pressure trip will occur.

C. Following reactor trip, the RCS pressure continues to decrease until HPI is actuated. The capacity of the HPI is sufficient to compensate for the leakage and maintains both pressure and volume control of the RCS. Thereafter, the reactor is assumed to be cooled down and depressurized at 100 °F per hour until isolation of the affected steam generator can be achieved.

D. Following reactor trip, offsite power is lost and~~the turbine stop valves will close. S~~since a reactor coolant-to-secondary system leak has occurred, steam line pressure will increase, opening the ~~steam bypass valves to the condenser and briefly opening the~~ main steam safety valves. ~~The bypass valves actuate at a lower pressure than do the steam safety valves. The majority of the reactor coolant that leaks as a result of the tube failure is condensed in the condenser.~~ The fission products escaping from the main steam safety valves and the condensate are released to the atmosphere.

E. After the RCS temperature has decreased to a value that corresponds to a saturation pressure which is below the main steam line safety valves setpoint, the affected steam generator can be isolated. Cooldown on~~f~~ the unaffected steam generator continues using an atmospheric dump valve until the temperature is reduced to less than 280 °F. Thereafter, cooldown to ambient conditions is continued using the Decay Heat Removal (DHR) system. The initial leak rate is conservatively assumed to continue during the entire depressurization time.

F. The operator will receive early notification that a primary to secondary leak has occurred by the radiation alarm on the reactor console which is initiated by the radiation monitor on the air ejector. The operator does not have to make a judgment quickly since the analyses assumes that no action is taken until 20 minutes after the tube rupture. Thus there is sufficient time available before starting cooldown and depressurization for the operator to obtain samples from the steam generator and to definitely determine from radioactivity and chemical analyses which generator contains the leak. For tube leaks smaller than the 435 gpm leak analyzed in the steam generator tube rupture accident, the operator has even more time to identify that a tube leak has occurred and to determine the affected steam generator.

G. Either an accident-initiated iodine spike (GIS) occurs or a pre-existing iodine spike (PIS) exists.

The radioactivity released during this accident is assumed to be discharged both through the main steam safety valves and atmospheric dump valves to the environment and through the turbine bypass to the condenser and then out the condensate vacuum pump exhaust. A gas-to-liquid partition factor of 10^4 is assumed for the iodine in the condenser (See References 28 and 33), but noble gases are assumed to be released directly to the atmosphere. TEDE dose results are~~The total dose to the body from all the xenon and krypton released is~~ given in Table 14-23. ~~The corresponding dose to the thyroid is also tabulated.~~ The atmospheric dilution is calculated using the 2-hour relative concentrations developed in Section 2.3.

14.2.2.3 Fuel Handling Accident

14.2.2.3.1 Identification of Cause

Spent fuel assemblies are handled entirely under water. Before refueling, the boron concentrations of the reactor coolant and the fuel transfer canal water above the reactor are increased so that, with all control rods removed, the k_{eff} of the core would not exceed 0.99. The fuel assemblies are stored under water in the spent fuel storage pool; the storage racks have a safe geometric spacing. Under these conditions, a criticality accident during refueling is not considered credible. Mechanical damage to the fuel assemblies during transfer operations is possible but improbable. A mechanical damage type of accident is considered the maximum potential source of activity release during refueling operations.

14.2.2.3.2 Reactor Protection Criterion

The criterion for reactor protection for this accident is that resultant doses shall not exceed the acceptance criteria of 10 CFR 50.67~~25 percent of 10 CFR 100 limits~~.

14.2.2.3.3 Methods of Analysis

The assumptions made for this analysis are shown in Table 14-24. The reactor is assumed to have been shut down for 72~~100~~ hours, since Technical Specifications prohibit fuel handling operations prior to this time. It is further assumed that the cladding of six rows of fuel rods in the assembly, 82 of 208, suffers mechanical damage.

Since the fuel pellets are cold, only the gap activity is released, and consists of ~~10 percent of the total noble gases other than Kr^{85},~~ 30 percent of the Kr~~R~~^{85}, ~~and~~ 12 percent of the I-131~~total radioactive iodine~~ in the damaged rods, and 10 percent of all other isotopes. Radioactive decay of the fission product inventory during the interval since shutdown and commencement of fuel handling operations is considered.

14.2.2.3.4 Results of Analysis

The gases released from the fuel assembly pass upward through the spent fuel storage pool water before reaching the atmosphere of the fuel handling building. The gas is assumed to pass through 23 feet of water, and 99.5 percent of the iodine released from the fuel assembly is assumed to remain in the water. No retention of the noble gases is assumed. The radionuclides released during the fuel handling accident are assumed to enter the atmosphere directly without filtration.~~The fuel handling building is ventilated, and discharge is through charcoal filters to the unit vent.~~ The atmospheric dilution is calculated using the 2-hour relative concentration developed in Section 2.3. Dose conversion factors consistent with FGR 11 and FGR 12~~ICRP 30~~ were utilized.

~~An additional case was analyzed to determine the offsite dose consequences of a fuel handling accident in containment with the personnel airlock and/or equipment hatch open during refueling. For this case the radionuclides released during the fuel handling accident are assumed to enter the atmosphere directly without filtration. The radionuclide source terms, release mechanism and pool scrubbing credited for this case were identical to the filtered release case.~~

The parameters used to analyze the fuel handling accident are given in Table 14-24. Table 14-25 gives the TEDE~~total integrated~~ doses at the exclusion distance and low population zone~~for the whole body and the thyroid~~

14.2.2.4.6 Conclusions

The hypothetical rod ejection accident has been investigated in detail at two different initial reactor power levels: rated power and zero power. Both BOL and EOL conditions were considered. The results of the analysis prove that the reactivity transient resulting from this accident will be limited by the Doppler effect and terminated by the Reactor Protection System with no serious core damage or additional loss of the coolant system integrity. Furthermore, it has been shown that an ejected rod worth greater than 1.52 percent Δk/k would be required to cause a pressure pulse, due to prompt dispersal of fragmented fuel and zirconium-water reaction, of sufficient magnitude to cause rupture of the pressure vessel, whereas the maximum rod worth as shown in Table 14-26 is about a factor of two less.

As a result of the postulated pressure housing failure associated with the accident (see Section 14.2.2.4.1), reactor coolant is lost from the system. The rate of mass and energy input to the reactor building is considerably lower than that subsequently reported for the smallest rupture size considered in the loss of coolant analysis (see Section 14.2.2.5.5). The maximum hole size resulting from a rod ejection is approximately 2.76 inches. This lower rate of energy input results in a much lower reactor building pressure than those obtained for any rupture sizes considered in the Loss of Coolant Accident (LOCA). Reactor building leakage is conservatively assumed to occur at the rate associated with the peak calculated pressure for the design basis loss of coolant accident, 0.2% volume per day for the first 24 hours, and 0.1% per day thereafter.~~ It is estimated that approximately 50 percent of any leakage will be through the Penetration Room Ventilation System.~~

The resultant doses from this accident are calculated assuming that all fuel rods undergoing DNB release all of their gap activity to the reactor coolant. Subsequently, this gap activity ~~and the activity in the reactor coolant from operation with one percent defective fuel pins~~ is released to the reactor building or the steam generators via primary-secondary leakage. For the case of a BOL rod ejection of the maximum rod worth of 0.65 percent Δk/k at rated power, the fuel rods that experience DNB are assumed to fail, releasing ~~gaseous~~ activity ~~to the reactor building~~ as shown in Table 14-31.

Fission product activities released to the reactor building atmosphere for this accident are calculated using the methods described in NRC Regulatory Guide 1.183~~discussed in Chapter 11~~. The ~~thyroid and whole body (gamma + beta)~~ doses were also calculated per Regulatory Guide 1.1834. The TEDE~~total integrated 2-hour~~ doses at the exclusion distance ~~to the thyroid and to the whole body~~ can be seen in Table 14-31. Also shown in Table 14-31 are the TEDE doses at the Low Population Zone (LPZ)~~ for 30-day exposure~~. No iodine removal by the spray or plateout on reactor building surfaces was assumed. These doses are less than the acceptance criteria of 10 CFR 50.67~~well within the guideline values of 10 CFR 100~~.

C. Post-Blowdown Margins

Following the time of peak pressure for the DBA, the adequacy of the reactor building design can be demonstrated by an energy margin defined as the difference between the energy capability of the reactor building (see Table 14-48) and the calculated energy content at any given time. Figure 14-65 shows this margin as a function of time for the vapor region only and for the sump plus vapor region. At the time of peak pressure the margins are 21.6 x 10^6 Btu for the vapor region and 27.1 x 10^6 for the entire reactor building. At 1,100 seconds the margins are 67.7 x 10^6 Btu and 84.9 x 10^6 Btu, respectively.

The vapor region energy margin can be related to the potential energy release of a hypothetical zirconium-water reaction. Using a reaction energy of 2,800 Btu/lbm zirconium (see Reference 19), reaction of 100 percent of the core zirconium would generate 140 x 10^6 Btu. If all the hydrogen liberated by this 100 percent metal-water reaction were burned and generated heat at a rate of 2,350 Btu/lbm zirconium, the total energy generated would be 258 x 10^6 Btu. Thus, the vapor region energy margin at the time of peak pressure could be associated with a 15 percent zirconium-water reaction or a 8 percent zirconium-water reaction with hydrogen combustion. At 1,100 seconds, the associated reactions would be 48 percent and 26 percent, respectively.

14.2.2.5.5.6 Conclusions

The pressure transient results indicate that, even with the conservative assumptions employed in the analyses, a margin of about 9.3 percent exists between the reactor building structure design pressure of 59 psig and the maximum calculated pressure of 54.0 psig. It may be concluded from the analyses of the LOCA that the reactor building design is adequate to withstand the postulated release of the reactor coolant and associated energy sources without exceeding the design pressure. Furthermore, the reactor building design has ample margin exceeding the energy releases considered.

Reactor building equipment environmental qualifications have been acceptably demonstrated for the long term conditions predicted by the DBA analysis.

14.2.2.5.6 Resultant Doses From a LOCA

The resultant doses from a LOCA are calculated by assuming that the activity associated with the gap of all fuel rods is released to the reactor building atmosphere. The timing of releases is modeled as specified in NRC Regulatory Guide 1.183~~While perforation of fuel cladding will require some time, it is conservatively assumed that all the fuel rods release their gap activity to the reactor building~~. The activity in the coolant was ~~also~~ evaluated ~~and was found~~ to be less than one percent of the gap activity and was~~can~~ therefore ~~be~~ neglected.

The activity released to the reactor building from the gaps of all fuel rods is tabulated in Table 14-49.

~~Half of the iodine released is assumed to plate out on exposed surfaces in the reactor building. The other half is assumed to remain in the reactor building atmosphere where it is available for leakage. No~~ ESF leakage equal to twice that described in Section 14.2.2.5.7 as outside the sealed rooms is assumed to occur in this analysis. ~~The sodium hydroxide in the reactor building spray reduces the airborne iodine as described in Section 14.2.2.6. Of the iodine available for leakage, two percent has been assumed to be unavailable for removal by the spray. The iodine removal constants used are described in Section 14.2.2.6.~~

~~The resultant doses due to the maximum break size LOCA are given in Table 14-49.~~

~~14.2.2.6 Maximum Hypothetical Accident~~

~~14.2.2.6.1 Description of the Accident~~

~~In order to demonstrate that the operation of Arkansas Nuclear One - Unit 1 does not produce undue risk to the public under any accident conditions, the dose that would be received at the exclusion distance and the low population zone from a release of radioactivity larger than any which could actually occur is calculated. The calculations assume a maximum hypothetical fission product release as described in TID-14844 (Reference 49). All of the noble gases, half of the iodine, and one percent of the solid fission products in the core are assumed to be released to the reactor building. Half of the released iodine is assumed immediately to plate out on surfaces within the reactor building, however, so that only one quarter of the core inventory of iodine remains in the reactor building atmosphere. This is consistent with NRC Regulatory Guide 1.4 guidance.~~

The maximum core power of Arkansas Nuclear One, Unit 1 is 2568 MWt. Fission product activities were calculated based on a ~~slightly higher (~1%)~~ power level of 2619.36~~2596~~ MWt to account for a 2% power uncertainty. ~~Table 14-50 shows the isotopic information used to obtain release activities.~~ A reactor building leak rate of 0.2 percent volume for the first day and 0.1 percent volume per day thereafter was assumed for containment leakage.

The TEDE~~thyroid, whole body, and beta skin~~ offsite dose calculations were calculated using the RADTRAD~~Bechtel~~ code ~~LOCADOSE~~. Dose conversion factors ~~for whole body and beta skin~~ were obtained ~~primarily~~ from FGR 11 and FGR 12~~RG 1.109 (See Calc. #89-E-0164-06, Attachment 4, "Correspondence from Robert G. Omen, Chief Nuclear Engineer, Bechtel to Richard Harris, Entergy", dated November 9, 1992)~~.

~~14.2.2.6.2 Iodine Removal~~

The sodium hydroxide in the reactor building spray reduces the airborne iodine. Table 14-51 lists the iodine removal constants used in this analysis. It is assumed that 0.154 percent of the iodine is organic, 95 percent is particulate, and 4.85~~91~~ percent is elemental. These numbers are consistent with Regulatory Guide 1.1834. Also, one spray header was assumed to be operating.

~~14.2.2.6.3 Offsite Thyroid Dose~~

~~The equation used to calculate the thyroid dose is that from TID-14844,~~

$$\cancel{D = B_T * X/Q_T * \sum_{i=1}^{5} (DCF)_i * Q_{iT}}$$

~~where:~~

~~D = thyroid dose, rem~~

~~$(DCF)_i$ = thyroid dose conversion factor for isotope i inhaled, rem/Ci~~

~~B_T = breathing rate: 3.47E-4 m^3/sec for the first eight hours, 1.75E-4 m^3/sec for eight to 24 hours and 2.32E-4 m^3/sec thereafter~~

~~X/Q_T = relative concentration factor with wind speed averaged over the 190-foot height of reactor building for time interval T, sec/m^3~~

~~Q_{iT} = Curies of isotope i released during time interval T.~~

The following relative concentration factors, X/Qs, are based on windspeeds averaged over the 190-foot height of the reactor building as discussed in Section 2.3.6.2.

0-2 hr, exclusion distance	6.8E-4 sec/m^3
0-8 hr, LPZ	1.1E-4 sec/m^3
8-24 hr, LPZ	1.1E-5 sec/m^3
1-4 day, LPZ	4.0E-6 sec/m^3
4-30 day, LPZ	1.3E-6 sec/m^3

The r~~R~~esultant doses due to a LOCA are shown in Table 14-49~~52. The 10 CFR 100 limit is 300 rem~~.

~~**14.2.2.6.4 Offsite Whole Body Dose**~~

~~The equation used to calculate the whole body dose from airborne radioisotopes in a semi-infinite cloud is:~~

$$\cancel{D = X/Q_T * \sum_{i=1}^{16} (DCF)_i * Q_{iT}}$$

~~where:~~

~~D = whole body dose, rem~~

~~$(DCF)_i$ = whole body dose conversion factor for isotope i, rem-m^3/Ci-sec~~

~~X/Q = Same as defined above~~

~~Q_{iT} = Same as defined above~~

~~The whole body dose is shown in Table 14-52. The 10 CFR 100 limit is 25 rem.~~

~~**14.2.2.6.5 Offsite Beta Skin Dose**~~

~~The equation used to calculate the beta skin dose is:~~

$$\cancel{D = X/Q_T * \sum_{i=1}^{16} (DCF)_i * Q_{iT}}$$

~~where:~~

~~D = beta skin dose, rem~~

~~$(DCF)_i$ = beta skin dose per curie of isotope i, rem-m^3/Ci-sec~~

~~X/Q = Same as defined above~~

~~Q = Same as defined above~~

~~The beta skin dose is shown in Table 14-52~~

14.2.2.5.7~~6.6~~ Effects of Engineered Safeguards Systems Leakage during the Maximum Hypothetical Accident

The Reactor Building Spray System pumps and LPI pumps are located in sealed rooms of the auxiliary building through which air does not circulate. Cooling is accomplished by a closed cycle ventilation system which blows room air over cooling water coils. Therefore iodine leaking from these pumps is not exhausted through the plant vent by the ventilation system. A flow path does exist from LPI and the Reactor Building Spray Pumps through the penetration rooms and into the Reactor Building. Leakage from portions of this flow path outside the sealed rooms has been evaluated to assess the dose impact. Offsite dose estimates from containment and ES leakage are included in the TEDE dose calculation results reported in Section 14.2.2.5.6~~shown in Table 14-52~~.

Iodine leaking from the HPI pumps and portions of the HPI System flow path is not contained in sealed rooms. This leakage has been evaluated to assess the impact upon the ~~MHA~~ doses even though recirculation through the HPI System in the piggyback mode is expected only for certain small break LOCAs. The additional dose from HPI System leakage, using source terms consistent with the minimal fuel damage expected during small break LOCAs, was determined to be less than 0.04 rem thyroid for both the 2 hour exclusion distance and 30 day low population zone dose. Therefore, no significant offsite doses result from these sources, and the radiation released is as low as practicable.

14.2.2.5.8~~6.7~~ Control Room Doses

The dose to the control room operator from reactor building and ES leakage has been assessed. The Emergency Air Conditioning and Filtration Systems provided for the Control Room are described in Section 9.7.2.1. Iodine efficiencies of 95% for the recirculation filters (99% for particulate) and 99% for the outside filtered air used for control room pressurization are assumed. Unfiltered inleakage is assumed to be 82~~10~~ cfm. The 30 day integrated TEDE dose to the ~~thyroid of a~~ control room operator due to a LOCA~~from reactor building and ES leakage~~ is 3.77~~18.93~~ Rem.

14.2.2.7 Waste Gas Tank Rupture

In this accident, it is assumed that a waste gas tank ruptures releasing the waste gas it contains into the auxiliary building. The radioactive waste gas is then assumed to be carried out the plant vent by the Auxiliary Building Ventilation System. In this analysis, it is assumed the plant vent remains open. In addition, no decay of radioisotopes is assumed after the waste gas tank rupture occurs.

The maximum inert gas activity which could accumulate in a single waste gas tank is given in Table 11-10. In addition the tank would also contain traces of radioiodine. The quantity of radioiodine was calculated using the maximum coolant activities in Table 11-5, a partition factor of 10^{-4} and hydrogen removal from the coolant of 55 cc/l. The maximum amount of iodine that could be found in a waste gas tank is listed in Table 14-53.

Table 14-1

ABNORMALITIES AFFECTING CORE AND COOLANT BOUNDARY

Event	Analysis Assumptions	Effect
Uncompensated Operating Reactivity Changes	Automatic control system inoperative or unused	Change in reactor system average temperature. Automatic reactor trip if uncompensated. No equipment damage or radiological hazard.
Startup Accident	Uncontrolled single-group and all-group rod withdrawal from subcriticality with the reactor at zero power. Only high flux and high pressure trips were used to terminate the accident.	Power rise terminated by negative Doppler effect, control rod inhibit on short period, high Reactor Coolant System pressure, or overpower. No equipment damage or radiological hazard.
Rod Withdrawal Accident at Rated Power Operation	Uncontrolled single-group and all-group rod withdrawal with the reactor at rated power. Only high flux and high pressure trips were used to terminate the accident.	Power rise terminated by overpower trip or high pressure trip. No equipment damage or radiological hazard.
Moderator Dilution Accident	Uncontrolled addition of unborated water to the Reactor Coolant System due to failure of equipment designed to limit flow rate and total water addition.	Slow change of power terminated by reactor trip on high temperature or pressure. During shutdown a decrease in shutdown margin occurs, but criticality does not occur. No radiological hazard.
Cold Water Accident	Two Reactor Coolant Pumps started with reactor at 60% of rated power and end-of-life conditions.	Power and pressure transient produced by increase in flow does not result in a reactor trip. No equipment damage or radiological hazard.
Loss of Coolant Flow	Reactor Coolant System flow decreases because of mechanical or electrical failure in one or more Reactor Coolant Pumps.	None. Reactor is protected by the flux-imbalance-flow and power-pump trip. No radiological hazard.
Stuck-out, Stuck-in, or Dropped-in Control Rod	Maximum worth control rod dropped into core with the reactor at rated power, end-of-life condition.	None. Subcriticality can be achieved if any one rod is stuck out. If stuck in or dropped in, continued operation is permitted if effect on power peaking is not severe. No radiological hazard.
Loss of Electric Power	A blackout condition or a complete loss of all station power is considered. ~~One percent defective fuel and a 1 gpm steam generator~~	Possible power reduction or reactor trip, depending on condition. Redundancy provided for safe shutdown. ~~See~~

		~~tube leakage are assumed.~~		~~Table 14-16 for resultant doses.~~

Table 14-14

NATURAL CIRCULATION CAPABILITY

Time After Loss of Decay Heat Power, s	Decay Heat Core Power, %	Natural Circulation Core Flow Available, % full flow	Flow Required for Removal, % full flow
3.6×10^1	5	4.1	2.3
2.2×10^2	3	3.3	1.2
1.2×10^4	1	1.8	0.36
1.3×10^5	0.5	1.2	0.20

Table 14-15

DROPPED ROD ACCIDENT PARAMETERS

Moderator Coefficient, $(\Delta k/k)°F$	-4.0×10^{-4}
Doppler Coefficient, $(\Delta k/k)°F$	-1.3×10^{-5}
Control Rod Worth at Rated Power, % $\Delta k/k$	0.65
Control Rod Drop Time to Full Insertion, s (insertion rate = 0.325% $\Delta k/k/s$)	2.0

Table 14-16

LOSS-OF-LOAD ACCIDENT PARAMETERS AND RESULTS

Steam Relieved to the Atmosphere, lb	205,000
Steam Venting Time, min	3
Relative Concentration at Exclusion Distance, s/m^3	6.5×10^{-4}
Iodine Released During Relief (in Iodine-131 dose equivalent Curies)	3.8×10^{-2}
Total Integrated Thyroid Dose at Exclusion Distance, rem	1.2×10^{-2}

~~**Table 14-17**~~

~~**LOSS OF ALL AC POWER ACCIDENT PARAMETERS AND RESULTS**~~

~~Steam Relieved to Atmosphere, lb~~	~~203,900~~
~~Relative Concentration at Exclusion Distance, s/m^3~~	~~6.5×10^{-4}~~
~~Steam Generator Isolation Time, min~~	~~55~~
~~Iodine Released to Atmosphere (in Iodine-131 dose equivalent Curies)~~	~~7.1×10^{-1}~~
~~Total Integrated Thyroid Dose at Exclusion Distance, rem~~	~~2.4×10^{-1}~~

Table 14-18

SITUATIONS ANALYZED FOR STANDBY SAFEGUARDS ANALYSIS

Event		Analysis Assumptions		Effect
Steam Line		Reactor coolant leakage into the faulted steam generator continues for 251.84~~.5~~ hours following reactor operation at Technical Specification activity limits~~with 1% defective fuel~~ and 1 gpm total steam generator tube leakage.		Reactor trips following a large rupture. See Table 14-21 for resultant doses.
Steam Generator Tube Failure		Reactor coolant leakage into the faulted steam generator continues for 34 minutes following reactor operation Technical Specification activity limits~~with 1% defective fuel~~.		Reactor automatically trips if leakage exceeds normal makeup capacity to Reactor Coolant System. See Table 14-23 for resultant doses.
Fuel Handling Accident		Gap activity is released from six rows of fuel rods in one assembly while in spent fuel storage pool or fuel transfer canal. No retention of noble gases and only 99.5% retention of iodine is considered.		See Table 14-25 for resultant doses.
Rod Ejection Accident		All fuel rods that experience DNB are assumed to release their total gap activity to the reactor coolant ~~(following operation with 1% defective fuel)~~.		Some fuel cladding failure. See Table14-31 for resultant doses.
Loss-of-Coolant Accident		The design of the ECCS is based on the double-ended rupture of the 36-in. diameter Reactor Coolant System pipe. The reactor building design is based on the 5.0 ft^2 rupture. Environmental effects are based on the release of all the gap activity.		Cladding temperature remains below 2,200 °F. See Table14-49 for resultant doses. See Table 4-43 for summary of reactor building pressure analysis.
~~Maximum Hypothetical Accident~~		~~Release of 100% noble gases, 50% iodine, a 1% solid fission products.~~		~~See Table 14-52 for resultant doses.~~
Waste Gas Tank Rupture		A tank is assumed to contain the gaseous activity evolved from degassing all of the reactor coolant following operation with 1% defective fuel.		See Section14.2.2.7 for resultant doses.

Table 14-20

SUMMARY OF STEAM LINE FAILURE ANALYSIS

Maximum Thermal Power During Transient, %	100
Maximum Return to Power After Trip, %	33
Minimum Subcritical Margin, % Δk/k	0.0084
Peak Reactor Building Pressure, psig (occurs at 74 s)	51.1
Peak Reactor Building Temperature, °F (occurs at 67 s)	386
Maximum Tube Stress, psi	7,350

Table 14-21

RESULTANT DOSES FROM A STEAM LINE FAILURE

~~Activity Released to the Atmosphere~~	
Source Terms~~Equivalent Ci ^{131}I~~	See Table 14-50~~4.73~~
Faulted~~Weight of Feedwater and~~ Steam Generator Mass~~Water~~, lbm	60~~2~~,0~~6~~00
Duration Primary-Secondary Leak Rate, gpm (per Steam Generator)	0.5
~~Reactor Coolant Leakage, gal~~	~~270~~
Relative Concentration at Exclusion Distance, s/m^3	6.8~~5~~ x 10^{-4}
TEDE~~Thyroid~~ Doses~~ at Exclusion Distance~~, rem (GIS)	~~1.6~~
Exclusion Distance	2.07
Low Population Zone	1.05
TEDE Doses, rem (PIS)	
Exclusion Distance	0.45
Low Population Zone	0.19

Table 14-22

STEAM GENERATOR TUBE FAILURE INPUT PARAMETERS

Initial Leak Rate, gpm (faulted steam generator)	435
Duration Leak Rate, gpd (intact steam generator)	150
Normal Makeup Rate, gpm	70
High-Pressure Injection Setpoint, psig	1,500
~~Assumed Defective Fuel, %~~	~~1~~

Table 14-23

SUMMARY OF STEAM GENERATOR TUBE FAILURE ANALYSIS

Low-Pressure Trip Occurs at, min	11
Time to Isolation of Faulted Steam Generators~~Total Depressurization Time of Reactor Coolant System~~, min	34
Reactor Coolant Leakage through Faulted Steam Generator~~During Depressurization~~, ft^3	1,977
Time to Isolation of Intact Steam Generator, hr~~Activity Released to Atmosphere~~	237.8
Source Terms~~Noble Gases, equiv Ci ^{133}Xe~~	See Table 14-50~~25,605~~
~~Iodine, equiv Ci ^{133}I~~	~~13.91~~
TEDE~~Total Integrated~~ Doses, rem (GIS)~~ at Exclusion Distance~~	
Exclusion Distance~~Thyroid, rem~~	1.26~~4.64~~
Low Population Zone~~Whole Body, rem~~	0.23~~1.25 x 10^{-1}~~
TEDE Doses, rem (PIS)	
Exclusion Distance	0.45
Low Population Zone	0.19
Relative Concentration at Exclusion Distance, s/m^{-3}	6.8~~5~~ x 10^{-4}

Table 14-24

FUEL HANDLING ACCIDENT PARAMETERS

Fuel Batch Average Burnup for Peak Assembly, Mwd/ton	61,050~~60,000~~
Power Level During Operation, MW (including 2% uncertainty)	2619.36~~2855~~
Radial Peaking Factor	1.8
Decay Time, hrs	72~~100~~
~~Filter Efficiencies for Iodine Removal~~	
~~Organic, %~~	~~70~~
~~Inorganic, %~~	~~90~~
Relative Concentration at Exclusion Distance, sec/m^3	6.8~~5~~ x 10^{-4}
Pool Decontamination Factors	
Organic Iodine	1
Inorganic Iodine	286~~133~~
Noble Gases	1
Iodine GAP Composition	
Inorganic, %	99.8~~75~~
Organic, %	0.1~~25~~
Fraction of Assembly Activity in GAP	
Iodine-131, %	12
Krypton-85,~~,~~ %	30
Other Isotopes, %	10
~~Noble Gases Other than Krypton -85, %~~	~~10~~
Number of Damaged Pins	82

Table 14-25

FUEL HANDLING ACCIDENT DOSES

TEDE~~Total Integrated~~ Doses ~~at Exclusion Distance~~ for Fuel Handling Accident in Spent Fuel Pool or~~(Filtered Release)~~

~~Thyroid, Rem~~	~~10.4~~
~~Whole Body, Rem~~	~~0.3~~

~~Total Integrated Dose at Exclusion Distance for Fuel Handling Accident~~ in Reactor Containment, rem ~~Building~~ (Unfiltered Release)

Exclusion Distance	~~Thyroid, Rem~~	1.40~~69.1~~
Low Population zone	~~Whole Body, Rem~~	0.25~~0.3~~

Table 14-26

ROD EJECTION ACCIDENT PARAMETERS

Worth of Ejected Rod	
Rated Power, No Xenon, % Δk/k	0.40
Rated Power, With Xenon, % Δk/k	0.40
Hot, Zero Power, Critical, % Δk/k	0.23
Rated Power, Maximum Worth, % Δk/k	0.65
Rod Ejection Time, s	0.15
Rated Power Level, MWt	2,568
Reactor Trip Delay Time	
High Flux Trip, s	0.3
High-Pressure Trip, s	0.5
Control Rod Drive Trip Time to 2/3 Insertion, s	1.4

Table 14-31

RESULTANT DOSES FROM ANALYSIS OF THE ROD EJECTION ACCIDENT

Source Terms~~Radioactivity released to Reactor Building~~ from fuel rods experiencing DNB

Isotope	Core Inventory~~Activity,~~ [Curies]
Kr-83m	8.77E+06
Kr-85	9.614×10^{45}
Kr-85m	$1.90\cancel{6.87} \times 10^{37}$
Kr-87	3.734×10^{37}
Kr-88	$5.01\cancel{1.23} \times 10^{47}$
Xe-131m	$7.55\cancel{1.13} \times 10^{45}$
Xe-133	$1.4\cancel{18} \times 10^{68}$
Xe-133m	$4.60\cancel{1.32} \times 10^{46}$
Xe-135	$3.51\cancel{4.53} \times 10^{37}$
Xe-135m	$3.09\cancel{85} \times 10^{37}$
Xe-138	1.27×10^{8}
I-130	1.36×10^{6}
I-131	$7.22\cancel{1.83} \times 10^{57}$
I-132	$1.05\cancel{2.62} \times 10^{48}$
I-133	$1.48\cancel{3.95} \times 10^{48}$
I-134	$1.67\cancel{2.46} \times 10^{38}$
I-135	$1.41\cancel{25} \times 10^{48}$
Cs-136	2.98×10^{6}
Cs-137	9.88×10^{6}
Cs-138	1.38×10^{8}
Rb-86	1.29×10^{5}

Reactor Building Leak Rate

0.2%/day on the first day
0.1%/day thereafter
~~50% of containment leakage is processed by the penetration room ventilation system~~

Relative Concentrations, sec/m^3

0-2 hour, exclusion distance	6.8×10^{-4}
0-8 hour, low population zone	1.1×10^{-4}
8-24 hour, low population zone	1.1×10^{-5}
1-4 day, low population zone	4.0×10^{-6}
4-30 day, low population zone	1.3×10^{-6}

TEDE~~Two-Hour~~ Doses, rem (containment release path)~~ at Exclusion Distance:~~

2-hour, Exclusion Distance~~Thyroid, Rem~~ 4.73~~6.266~~
30-day, Low Population Zone~~Whole Body, Rem~~ 2.28~~0.012~~

TEDE~~Thirty-Day~~ Doses, rem (primary-secondary release path)~~ at Low Population Zone:~~

2-hour, Exclusion Distance~~Thyroid, Rem~~ 3.03~~5.025~~
30-day, Low Population Zone~~Whole Body, Rem~~ 1.64~~0.009~~

Table 14-49

RESULTANT DOSES FROM ~~MAXIMUM BREAK SIZE~~ LOCA

Core Power, MWt: 102% of 2,596

~~Total Fission Product Inventory in All Fuel Pin Gaps Released to Reactor Building Atmosphere (Based on lifetime-averaged thermal flux)~~

~~Isotope~~	~~Inventory Curies/MWt~~
~~$^{83}Kr^{m}$~~	~~3.5×10^{0}~~
~~$^{85}Kr^{m}$~~	~~1.91×10^{1}~~
~~^{85}Kr~~	~~2.68×10^{2}~~
~~^{87}Kr~~	~~1.04×10^{1}~~
~~^{88}Kr~~	~~3.42×10^{1}~~
~~$^{131}Xe^{m}$~~	~~3.14×10^{1}~~
~~$^{133}Xe^{m}$~~	~~3.67×10^{1}~~
~~^{33}Xe~~	~~3.29×10^{3}~~
~~$^{135}Xe^{m}$~~	~~1.07×10^{1}~~
~~^{135}Xe~~	~~1.26×10^{1}~~
~~^{138}Xe~~	~~1.0×10^{1}~~
~~^{131}I~~	~~5.1×10^{2}~~
~~^{132}I~~	~~7.3×10^{1}~~
~~^{133}I~~	~~1.1×10^{2}~~
~~^{134}I~~	~~6.85×10^{0}~~
~~^{135}I~~	~~3.48×10^{1}~~

Isotope	Core Inventory [Curies]	Isotope	Core Inventory [Curies]	Isotope	Core Inventory [Curies]
Kr-85	9.61E+05	**Sb-127**	6.56E+06	**Ce-143**	1.12E+08
Kr-85m	1.90E+07	**Sb-129**	2.01E+07	**Ce-144**	1.05E+08
Kr-87	3.73E+07	**Te-127**	6.52E+06	**Np-239**	1.39E+09

Kr-88	5.01E+07	**Te-127m**	1.16E+06	**Pu-238**	1.93E+05
Xe-131m	7.55E+05	**Te-129**	1.88E+07	**Pu-239**	2.51E+04
Xe-133	1.48E+08	**Te-129m**	3.66E+06	**Pu-240**	3.88E+04
Xe-133m	4.60E+06	**Te-131m**	1.40E+07	**Pu-241**	9.82E+06
Xe-135	3.51E+07	**Te-132**	1.02E+08	**Am-241**	1.02E+04
Xe-135m	3.09E+07	**Sr-89**	7.25E+07	**Cm-242**	2.71E+06
Xe-138	1.27E+08	**Sr-90**	7.47E+06	**Cm-244**	1.99E+05
I-130	1.36E+06	**Sr-91**	8.78E+07	**La-140**	1.32E+08
I-131	7.22E+07	**Sr-92**	9.40E+07	**La-142**	1.15E+08
I-132	1.05E+08	**Ba-139**	1.32E+08	**Nb-95**	1.34E+08
I-133	1.48E+08	**Ba-140**	1.28E+08	**Nd-147**	4.70E+07
I-134	1.67E+08	**Mo-99**	1.35E+08	**Pr-143**	1.11E+08
I-135	1.41E+08	**Rh-105**	7.25E+07	**Y-90**	7.75E+06
Cs-134	1.46E+07	**Ru-103**	1.14E+08	**Y-91**	9.53E+07
Cs-136	2.98E+06	**Ru-105**	7.64E+07	**Y-92**	9.51E+07
Cs-137	9.88E+06	**Ru-106**	4.19E+07	**Y-93**	1.07E+08
Cs-138	1.38E+08	**Tc-99m**	1.18E+08	**Zr-95**	1.29E+08
Rb-86	1.29E+05	**Ce-141**	1.23E+08	**Zr-97**	1.23E+08

Table 14-49 (continued)

Reactor Building Leak Rate

0.2%/day on the first day
0.1%/day thereafter

Relative Concentrations, sec/m^3

0 - 2 hour, exclusion distance	6.8×10^{-4}
0 - 8 hour, low population zone	1.1×10^{-4}
8 - 24 hour, low population zone	1.1×10^{-5}
1 - 4 day, low population zone	4.0×10^{-6}
4 - 30 day, low population zone	1.3×10^{-6}

Iodine removal constant (See Table 14-51)

~~Elemental (91%)~~	~~11.5/hr~~
~~Organic (4%)~~	~~0/hr~~
~~Particulate (5%)~~	~~2.6/hr~~

*TEDE Doses, Rem

~~Thyroid~~

2 hour, exclusion distance	10.49~~7.01~~
30 day, low population zone	2.56~~2.66~~

~~Whole Body~~

~~2 hour, exclusion distance~~	~~1.65×10^{-2}~~
~~30 day, low population zone~~	~~1.06×10^{-2}~~

~~Skin~~

~~2 hour, exclusion distance~~	~~1.6×10^{-2}~~
~~30 day, low population zone~~	~~1.4×10^{-2}~~

* 50% of containment leakage is processed by the penetration ventilation system. Doses include the dose assessed from 782 cc/hr ESF leakage from components located outside sealed rooms.

Table 14-50

~~TOTAL FISSION PRODUCT INVENTORY IN CORE~~
~~(based on lifetime average thermal flux)~~

~~Isotope~~	~~Half-Life~~	~~Fission Product Inventory, Ci/MWt~~	~~Gamma Energy per Disintegration, MeV~~
~~^{131}I~~	~~8.05 d~~	~~2.51×10^4~~	~~0.374~~
~~^{132}I~~	~~77 hr[(a)]~~	~~3.81×10^4~~	~~2.390~~
~~^{133}I~~	~~20.3 hr~~	~~5.63×10^4~~	~~0.510~~
~~^{134}I~~	~~52.0 m~~	~~6.58×10^4~~	~~1.938~~
~~^{135}I~~	~~6.68 hr~~	~~5.10×10^4~~	~~2.443~~
~~$^{83}Kr^m$~~	~~1.86 hr~~	~~2.85×10^3~~	~~0.001~~
~~$^{85}Kr^m$~~	~~4.4 hr~~	~~8.41×10^3~~	~~0.151~~
~~^{85}Kr~~	~~10.76 y~~	~~3.08×10^2~~	~~0.002~~
~~^{87}Kr~~	~~76 m~~	~~1.54×10^4~~	~~1.375~~
~~^{88}Kr~~	~~2.80 hr~~	~~2.33×10^4~~	~~2.353~~
~~$^{131}Xe^m$~~	~~11.8 d~~	~~2.13×10^2~~	~~0.003~~
~~$^{133}Xe^m$~~	~~2.26 d~~	~~1.22×10^3~~	~~0.063~~
~~^{133}Xe~~	~~5.27 d~~	~~5.06×10^4~~	~~0.030~~
~~$^{135}Xe^m$~~	~~15.6 m~~	~~1.33×10^4~~	~~0.668~~
~~^{135}Xe~~	~~9.14 hr~~	~~1.02×10^4~~	~~0.146~~
~~^{138}Xe~~	~~17.5 m~~	~~5.10×10^4~~	~~4.940~~
~~Solids~~	~~2.72 hr (0 - 2 hr)~~ ~~$t(hr)^{-0.21}$ (> 2 hr)~~	~~1.44×10^6 Ci~~	~~0.7~~

~~(a) Half-life of precursor, ^{132}Te, used.~~

Source Terms for MSLB & SGTR

The RCS activity presented in the following table is based on an equilibrium 1 µCi/g dose equivalent I-131 and 72/E µCi/g total. The secondary activity is based on an equilibrium 0.1 µCi/g dose equivalent I-131.

Isotope	RCS Activity (Ci)	Secondary Activity (Ci)
Kr85	4.80E+02	0.00E+00
Kr85m	1.31E+03	0.00E+00
Kr87	2.09E+03	0.00E+00
Kr88	2.93E+03	0.00E+00
Xe131m	3.78E+02	0.00E+00
Xe133	3.02E+04	0.00E+00
Xe133m	7.64E+02	0.00E+00
Xe135	1.30E+04	0.00E+00
Xe135m	1.18E+03	0.00E+00
Xe-138	3.46E+03	0.00E+00
I130	6.82E+02	1.29E+01
I131	7.33E+01	1.39E+00
I132	1.00E+03	1.90E+01
I133	6.91E+02	1.31E+01
I134	1.48E+03	2.81E+01
I135	1.22E+03	2.31E+01
Cs-134	5.11E+02	9.70E+00
Cs-136	4.03E+01	7.66E-01
Cs-137	4.22E+02	8.01E+00
Cs-138	1.00E+04	1.90E+02
Rb-86	6.43E+01	1.22E+00

Table 14-51

REACTOR BUILDING SPRAY SYSTEM EFFECTIVENESS

Parameter	1 Spray Header Operates	2 Spray Headers Operate
Spray flow, gpm	1000	2000
Effective fall ht, ft	115	115
Rx Building Free volume, ft	1,81~~3~~0,000	1,81~~3~~0,000
Mass Median diameter, microns	786~~1163~~	786~~1163~~
~~Geometric standard deviation~~	~~1.5~~	~~1.5~~
Sprayed Volume Fraction	0.89~~87~~	
Unsprayed to Sprayed Volume Mixing Rate, cfm~~hr^{-1}~~	6270~~.176~~	
Average removal rate constant, hr^{-1}		
Elemental (4.85~~91~~%)	~~11.5~~20 (injection) 10 (recirculation	
Organic (0.154%)	0	
Partic. (95%)	2.6	
Recirculation Start Time (hr)	1.18~~0~~3	

~~**Table 14-52**~~

~~**RESULTANT DOSES FROM A MAXIMUM HYPOTHETICAL ACCIDENT**~~

~~TID-14844 Source at a Reactor Core Power of 2568 MWt~~

~~Reactor Building Leak Rate:~~

~~0.2%/day on the first day~~
~~0.1%/day thereafter~~

~~Relative Concentrations, s/m^3~~

~~0 - 2 hour, exclusion distance~~	~~6.8×10^{-4}~~
~~0 - 8 hour, low population zone~~	~~1.1×10^{-4}~~
~~8 - 24 hour, low population zone~~	~~1.1×10^{-5}~~
~~1 - 4 day, low population zone~~	~~4.0×10^{-6}~~
~~4 - 30 day, low population zone~~	~~1.3×10^{-6}~~

~~Iodine removal constant~~

~~Elemental (91%)~~	~~11.5/hr~~
~~Organic (4%)~~	~~0/hr~~
~~Particulate (5%)~~	~~2.6/hr~~

~~*Doses, Rem~~

~~Thyroid~~	
~~2 hour, exclusion distance~~	~~148.68~~
~~30 day, low population zone~~	~~52.38~~
~~Whole Body~~	
~~2 hour, exclusion distance~~	~~4.66~~
~~30 day, low population zone~~	~~1.54~~
~~Skin Body~~	
~~2 hour, exclusion distance~~	~~2.16~~
~~30 day, low population zone~~	~~0.72~~

~~* 50% of containment leakage is processed by the penetration ventilation system. The thyroid dose at the exclusion distance and at the low population zone includes the dose assessed from 391 cc/hr ESF leakage from components located outside sealed rooms.~~