HITACHI

GE Hitachi Nuclear Energy

James C. Kinsey
Vice President, ESBWR Licensing

PO Box 780 M/C A-55
Wilmington, NC 28402-0780
USA

T 910 675 5057
F 910 362 5057
jim.kinsey@ge.com

MFN 08-322

Docket No. 52-010

April 7, 2008

U.S. Nuclear Regulatory Commission
Document Control Desk
Washington, D.C. 20555-0001

Subject: Consolidated RAI Responses and DCD Appendix 3L Revisions Related to ESBWR Steam Dryer

The purpose of this letter is to submit the GE Hitachi Nuclear Energy (GEH) responses to the U.S. Nuclear Regulatory Commission (NRC) Requests for Additional Information (RAI) as described in References 1 and 2. Previous GEH responses were transmitted via references 3 thru 6.

Descriptions and relevant technical information related to the ESBWR steam dryer are being consolidated into the DCD and DCD Appendix 3L. As a result, previous RAI responses list information locations that are no longer applicable. Therefore, the previously submitted RAI responses are being revised to reflect the correct reference information.

Enclosure 1 lists the Requests for Additional Information (RAIs) that are included in this submittal. These RAI responses include original responses to recently received RAIs as well as revisions to previously submitted RAI responses in order to update the reference information. Included in this information are the RAI number and the GEH submittal letter (MFN) number of the original response if applicable.

D068
NRO

Enclosure 2 provides the responses for the RAIs listed in Enclosure 1. If the RAI response is a revision to one previously issued, this enclosure includes the original response as well as the revision in order to facilitate its review.

Enclosure 3 provides the DCD markup for Appendix 3L.

If you have any questions or require additional information, please contact me.

Verified DCD changes associated with these RAI responses are identified in the enclosed DCD markups by enclosing the text within a black box. The marked-up pages may contain unverified changes in addition to the verified changes resulting from this RAI response. Other changes shown in the markups may not be fully developed and approved for inclusion in DCD Revision 5."

Sincerely,

James C. Kinsey

James C. Kinsey
Vice President, ESBWR Licensing

References:

1. MFN 06-378, Letter from U.S. Nuclear Regulatory Commission to David Hinds, GEH, *Request For Additional Information Letter No. 67 Related To ESBWR Design Certification Application*, dated October 10, 2006

2. Email Dated May 10, 2007 from Chandu Patel (NRC)

3. MFN 07-194, Letter from James C. Kinsey, GEH to U.S. Nuclear Regulatory Commission, *Response to Portion of NRC Request for Additional Information Letter No. 67 Related to ESBWR Design Certification Application – Nuclear Steam Supply Systems – RAI Numbers 3.9-58, 3.9-61 through 3.9-64, 3.9-66, 3.9-71, 3.9-133, 3.9-135, through 3.9-139, 3.9-141, 3.9-146*, dated April 2, 2007

4. MFN 07-325, Letter from James C. Kinsey, GEH to U.S. Nuclear Regulatory Commission, *Response to Portion of NRC Request for Additional Information Letter No. 67 Related to ESBWR Design Certification Application – Mechanical Systems and Components – RAI Number 3.9-144*, dated June 11, 2007

5. MFN 07-268, Letter from James C. Kinsey, GEH to U.S. Nuclear Regulatory Commission, *Response to Portion of NRC Request for Additional Information Letter No. 67 Related to ESBWR Design Certification Application – DCD Section 3.9 – RAI Number 3.9-134*, dated May 16, 2007

6. MFN 07-194 Supplement 2, Letter from James C. Kinsey, GEH to U.S. Nuclear Regulatory Commission, *Response to Portion of NRC Request for Additional Information Letter No. 67 Related to ESBWR Design Certification Application – Mechanical Systems and Components – RAI Number3.9-135 S01*, dated August 15, 2007

Enclosure:

1. List of RAI Responses and Previous MFN Submittal Letter Numbers

2. Response to Portion of NRC Request for Additional Information Letter No. 67 Related to ESBWR Design Certification Application ESBWR Mechanical Systems and Components gjhgjhg

3. DCD Appendix 3L Markup

cc:	AE Cubbage	USNRC (with enclosure)
	GB Stramback	GEH/San Jose (with enclosure)
	RE Brown	GEH/Wilmington (with enclosure)
	DH Hinds	GEH/Wilmington (with enclosure)
	eDRF	0000-0077-4860

MFN 08-322

Enclosure 1

Listing of Consolidated Requests for Additional Information Responses Related to ESBWR Design Certification Application for ESBWR Steam Dryer

This Enclosure 1 to MFN 08-322 lists the RAIs that are being addressed in this submittal, their status (whether revised or new) and if revised, the MFN number that transmitted the original response for the RAI.

A status of "Revised" means that the response to the RAI had been previously transmitted via the corresponding MFN letter listed. A status of "New" means that this submittal is the first response to the listed RAI.

If the Status of the RAI is listed as "Revised" the text of the original submittal is listed, followed by the revised text in order to facilitate review.

RAI	Status	Original MFN
3.9-58	Revised	07-194
3.9-62	Revised	07-194
3.9-63	Revised	07-194
3.9-64	Revised	07-194
3.9-66	Revised	07-194
3.9-133	Revised	07-194
3.9-133 S01	New	----
3.9-134	Revised	07-268
3.9-134 S01	New	----
3.9-135	Revised	07-194
3.9-135 S01	Revised	07-194S02
3.9-137	Revised	07-194
3.9-138	Revised	07-194
3.9-138 S01	New	----
3.9-141	Revised	07-194
3.9-144	Revised	07-325
3.9-144 S01	New	----
3.9-151 S01	New	----

Enclosure 2

MFN 08-322

Response to Portion of NRC Request for

Additional Information Letter No. 67

Related to ESBWR Design Certification Application

Mechanical Systems and Components

RAI Numbers:
3.9-58 (revised)
3.9-62 (revised)
3.9-63 (revised)
3.9-64 (revised)
3.9-66 (revised)
3.9-133 (revised), -133S01
3.9-134 (revised), -134S01
3.9-135 (revised), -135S01 (revised)
3.9-137 (revised)
3.9-138 (revised), -138S01
3.9-141 (revised)
3.9-144 (revised), -144S01
3.9-151S01

Verified DCD changes associated with these RAI responses are identified in the enclosed DCD markups by enclosing the text within a black box. The marked-up pages may contain unverified changes in addition to the verified changes resulting from this RAI response. Other changes shown in the markups may not be fully developed and approved for inclusion in DCD Revision 5.

NRC RAI 3.9-58

There is no discussion in DCD Tier 2, Section 3.9.2.3 relative to the acoustic and computational fluid dynamic analyses to predict stresses at the locations to be monitored in the steam dryer. The applicant is requested to discuss the acoustic and computational fluid dynamic analyses to predict stresses at the locations to be monitored in the steam dryer.

GEH Original Response (ref. MFN 07-194)

The steam dryer acoustic load definition process is described in Subsection 3L.4.4 of DCD, Tier 2, Appendix 3L. A more detailed discussion of the source of the load definition and validation of the load definition methodology will be provided in a future reference report: Reference 3L-5: General Electric Company, "Steam Dryer - Acoustic Load Definition," NEDC-33312P, Class III (Proprietary), and NEDO-33312, Class I (Non-Proprietary).

The steam dryer structural evaluation is described in Subsection 3L.4.5 of DCD, Tier 2, Appendix 3L. The steam dryer stress analysis and comparison to acceptance criteria will be provided in a future reference report: General Electric Company, "Steam Dryer - Structural Evaluation," NEDC-33313P, Class III (Proprietary), and NEDO-33313, Class I (Non-Proprietary).

The steam dryer instrumentation and startup testing process is described in Subsection 3L.4.6 of DCD, Tier 2, Appendix 3L. Details regarding the confirmation of the steam dryer load definition and stress analysis during initial power ascension will be provided in a future reference report: General Electric Company, "Steam Dryer - Instrumentation and Power Ascension Monitoring," NEDC-33314P, Class III (Proprietary), and NEDO-33314, Class I (Non-Proprietary). Computational fluid dynamic analyses are not used in the steam dryer acoustic load definition.

DCD Original Impact (ref. MFN 07-194)

DCD Tier 2, Subsections 3.9.2.3, 3.9.2.4 3L.4.5, 3L.5.5.1.3 and Section 3L.6 were revised as noted in the attached DCD Tier 2 Rev. 3 markup.

LTRs NEDE-33312P Rev 0, NEDO-33312P Rev 0, NEDE-33313P Rev 0, NEDO-33313P Rev 0, NEDE-33314P Rev 0 and NEDO-33314P Rev 0 were added in DCD Tier 2 Rev. 3 as noted in the attached markup.

GEH Revised Response

The steam dryer acoustic load definition process is described in Subsection 3L.4.4 and validation of the load definition methodology in Subsection 3L.4.6 of DCD, Tier 2, Appendix 3L. A more detailed discussion of the process for determining ~~source of~~ the load definition ~~and validation of~~

~~the load definition methodology will be~~ is provided in ~~a future~~ reference report: Reference 3L-5: General Electric Company, "Steam Dryer - Acoustic Load Definition," NEDE~~C~~-33312P, Class III (Proprietary), and NEDO-33312, Class I (Non-Proprietary) and supporting reference 3L-8: General Electric Company, "ESBWR Steam Dryer - Plant Based Load Evaluation Methodology" NEDC-33408P, Class III (Proprietary), and NEDO-33408, Class I (Non-Proprietary).

The steam dryer structural evaluation is described in Subsection 3L.4.5 of DCD, Tier 2, Appendix 3L. The steam dryer stress analysis and ~~comparison to~~ acceptance criteria ~~will be~~is provided in ~~a future~~ reference report 3L-6: General Electric Company, "Steam Dryer – Structural Evaluation," NEDE~~C~~-33313P, Class III (Proprietary), and NEDO-33313, Class I (Non-Proprietary).

The steam dryer instrumentation and startup testing process is described in Subsection 3L.4.6 of DCD, Tier 2, Appendix 3L. ~~Details regarding the confirmation of the steam dryer load definition and stress analysis during initial power ascension will be provided in a future reference report: General Electric Company, "Steam Dryer - Instrumentation and Power Ascension Monitoring," NEDC-33314P, Class III (Proprietary), and NEDO-33314, Class I (Non-Proprietary). Computational fluid dynamic analyses are not used in the steam dryer acoustic load definition.~~

DCD Revised Impact

DCD Tier 2, Subsections 3.9.2.3, 3.9.2.4 3L.4.5, 3L.5.5.1.3 and Section 3L.6 were revised ~~as noted in the attached~~in DCD Tier 2 Rev. 3 ~~markup~~.

DCD Tier 2, Subsection Section 3L.6 will be revised as noted in the attached DCD Tier 2 Rev. 5 markup.

LTRs NEDE-33312P Rev 0, NEDO-33312P Rev 0, NEDE-33313P Rev 0, NEDO-33313~~P~~ Rev 0~~, NEDE-33314P Rev 0 and NEDO-33314P Rev 0~~ were added in DCD Tier 2 Rev. 3 ~~as noted in the attached markup~~.

LTR NEDC-33408P Rev 0, NEDO-33408 Rev 0 will be added as noted in the attached DCD Tier 2 Rev. 5 markup.

NRC RAI 3.9-62

The discussion provided in DCD Tier 2, Section 3.9.2.4 does not specifically address the steam dryer instrumentation and its capabilities. There is also no discussion on what data would be obtained from these sensors for a stress analysis of the steam dryer and main steam system components. Provide a discussion to demonstrate that the instrumentation mounted directly on the steam dryers shall provide sufficient information to perform an accurate stress analysis of all steam dryer and main steam system components and would include appropriate pressure sensors, strain gauges, and accelerometers.

GEH Original Response (ref. MFN 07-194)

The steam dryer will be instrumented with strain gauges and accelerometers to provide vibration measurements during startup testing. In addition, the steam dryer will be instrumented with pressure sensors to confirm the acoustic load definition used in the structural analysis. The steam dryer instrumentation and startup testing process is described in Subsection 3L.4.6 of the DCD, Tier 2, Appendix 3L. Additional reference reports will be included in Appendix 3L (see Response to RAI 3.9-58).

DCD Original Impact (ref. MFN 07-194)

No DCD changes will be made in response to this RAI.

GEH Revised Response

The steam dryer will be instrumented with strain gauges and accelerometers to provide vibration measurements during startup testing. In addition, the steam dryer will be instrumented with pressure sensors to confirm the acoustic load definition used in the structural analysis. The steam dryer instrumentation and startup testing process is described in Subsection 3L.4.6 of the DCD, Tier 2, Appendix 3L. ~~Additional reference reports will be included in Appendix 3L (see Response to RAI 3.9-58)~~

DCD Revised Impact

~~No DCD changes will be made in response to this RAI.~~

DCD Tier 2, Subsection 3L.4.6 will be revised as noted in the attached DCD Tier 2 Rev. 5 markup.

NRC RAI 3.9-63

The discussion provided in DCD Tier 2, Section 3.9.2.4 does not specifically address how the main steam lines in the ESBWR would be instrumented in order to identify the presence of acoustic resonances. Provide a discussion to demonstrate how the main steam lines in the ESBWR shall be instrumented to collect data to determine steam pressure fluctuations in order to identify the presence of acoustic resonances. Also discuss how the pressure fluctuations would be analyzed to determine steam dryer loading and stresses.

GEH Original Response (ref. MFN 07-194)

The steam dryer instrumentation, main steam line instrumentation, and startup testing process is described in Subsection 3L.4.6 of DCD, Tier 2, Appendix 3L. Additional reference reports will be provided: General Electric Company, "Steam Dryer - Instrumentation and Power Ascension Monitoring," NEDC-33314P, Class III (Proprietary), and NEDO-33314, Class I (Non-Proprietary). See response to RAI 3.9-58.

DCD Original Impact (ref. MFN 07-194)

DCD Tier 2, Subsection 3L.4.6 and Section 3L.6 were revised as noted in the attached DCD Tier 2 Rev. 3 markup.

GEH Revised Response

The steam dryer instrumentation, main steam line instrumentation, and startup testing process is described in Subsection 3L.4.6 of DCD, Tier 2, Appendix 3L and RAI 3.9-144S01. ~~Additional reference reports will be provided: General Electric Company, "Steam Dryer - Instrumentation and Power Ascension Monitoring," NEDC-33314P, Class III (Proprietary), and NEDO-33314, Class I (Non-Proprietary). See response to RAI 3.9-58.~~

DCD Revised Impact

DCD Tier 2, Subsection 3L.4.6 was revised in DCD Tier 2 Rev. 3 and will be further revised as shown in the attached DCD Tier 2 Rev. 5 markup.

DCD Tier 2, ~~and~~ Section 3L.6 will be ~~were~~ revised as noted in the attached DCD Tier 2 Rev. 5~~3~~ markup.

NRC RAI 3.9-64

The discussion provided in DCD Tier 2, Section 3.9.2.4 does not specifically address how the steam dryer data would be used to calibrate the main steam line instrumentation and data analysis prior to the removal or failure of the steam dryer instrumentation. Provide a discussion to address this concern.

GEH Original Response (ref. MFN 07-194)

Calibration of the steamline acoustic monitoring model against the steam dryer instrumentation during startup testing is described in Subsection 3L.4.6 of DCD, Tier 2, Appendix 3L.

DCD Original Impact (ref. MFN 07-194)

DCD Tier 2, Subsection 3L.4.6 was revised as noted in the attached DCD Tier 2 Rev. 3 markup.

GEH Revised Response

Pressure data correlation obtained from the on-dryer mounted instrumentation and the main steam line instrumentation is "benchmarked". During the startup testing of the first ESBWR unit, that will have both on-dryer pressure monitoring instrumentation and main steam line monitoring instrumentation installed, the main steam line instrumentation data from the prototype plant will be processed through the GEH acoustic model. The acoustic model predictions at the steam dryer locations, where on-dryer pressure instrumentation is installed, will be benchmarked to the actual measured data from the on-dryer installed pressure instrumentation. This will allow ESBWR specific uncertainty and bias values for the MSL instrumentation based load definition to be developed. This information will then be applied to non-prototype ESBWRs, where the main steam lines are instrumented, but on-dryer pressure instrumentation is either not installed or is reduced in quantity from that installed from that used in the prototype ESBWR.

~~Calibration of the steamline acoustic monitoring model against the steam dryer instrumentation during startup testing is described in Subsection 3L.4.6 of DCD, Tier 2, Appendix 3L.~~

DCD Revised Impact

~~DCD Tier 2, Subsection 3L.4.6 was revised as noted in the attached DCD Tier 2 Rev. 3 markup.~~
No DCD changes will be made in response to this RAI.

NRC RAI 3.9-66

The discussion provided in DCD Tier 2, Section 3.9.2.4 does not specifically state that the startup test procedure will include the stress limit curve to be applied for evaluating steam dryer performance. Verify that this curve would be included in the startup test procedure. Also provide the details of the stress limit curve which would be applied for the ESBWR steam dryer components.

GEH Original Response (ref. MFN 07-194)

Development of the steam dryer instrumentation power ascension limits and monitoring during startup testing is described in Subsection 3L.4.6 of DCD Tier 2 Appendix 3L. Additional discussions of the vibratory stress limits are provided in Subsection 3L.5.5.2 of DCD Tier 2 Appendix 3L.

DCD Original Impact (ref. MFN 07-194)

DCD Tier 2 Subsections 3.9.2.3 and 3L.5.5.2 were revised as noted in the attached DCD Tier 2 Rev. 3 markup.

GEH Revised Response (no change)

Development of the steam dryer instrumentation power ascension limits and monitoring during startup testing is described in Subsection 3L.4.6 of DCD Tier 2 Appendix 3L. Additional discussions of the vibratory stress limits are provided in Subsection 3L.5.5.2 of DCD Tier 2 Appendix 3L.

DCD Revised Impact

DCD Tier 2 Subsections 3.9.2.3 ~~and 3L.5.5.2 were~~was revised ~~as noted~~ in ~~the attached~~ DCD Tier 2 Rev. 3 and Subsection 3L.5.5.3 will be further revised as shown in DCD Tier#2 rev. 5 markup.

NRC RAI 3.9-133

It is not clear whether GE has committed to install instrumentation on the steam dryer in the prototype ESBWR plant for FIV response during power ascension. Although test and instrumentation plans are described in the report for some components, and GE lists the differences between the ESBWR and past BWR dryers in DCD Tier 2, Section 3L.5.5.1.3,stating that 'these differences warrant a detailed vibration analysis and test monitoring'; Item 5 in DCD Tier 2, Section 3L.2.1 (page 3L-4) implies that GE might submit a supplemental report asserting that 'FIV will not be an issue' for various components, which might include the steam dryer. Also, DCD Tier 2, Table 3L-4 lists many sensors that might be installed on the prototype steam dryer, and includes several caveats in the last column stating 'if problem occurs'. GE is requested to clarify the instrumentation that will be installed on the steam dryer, the main steam lines (MSLs), and steam system components, in the ESBWR prototype plant for FIV response during the startup power ascension. Also, GE is requested to clarify whether data for all equipment listed in DCD Tier 2,Table 3L-4 will be acquired during testing.

GEH Response (ref. MFN 07-194)

As discussed in DCD Tier 2, Subsection 3L.2.1, all reactor internals were evaluated for susceptibility to flow induced vibration. The initial screening and evaluation of the reactor internals identified the chimney partition assembly and steam dryer for instrumentation and inclusion in the FIV test program. The prototype ESBWR steam dryer will be instrumented as described in DCD Tier 2, Subsection 3.9.2.4 (will be revised to include steam dryer as stated in RAI 3.9-61 response) and Subsection 3L.4.6 of DCD, Tier 2, Appendix 3L. The prototype ESBWR chimney partitions will be instrumented as described in Section 3L.5 of DCD, Tier 2, Appendix 3L. The initial screening eliminated the Control Rod Guide Tubes (CRGTs), In-Core Monitor Guide Tubes (ICMGTs), and In-Core Monitor Housings (ICMHs) from the FIV test program. The basis for eliminating these components is provided in DCD Tier 2, Subsection 3L.2.1.

More quantitative FIV evaluations are ongoing for the remaining components identified by the initial screening: Chimney Head/Steam Separator assembly, Shroud/Chimney assembly, and the Standby Liquid Control (SLC) line. The components will be evaluated using the approach and criteria listed in Items 1 through 4 in DCD Tier 2, Subsection 3L.2.1. Item 5 in DCD Tier 2, Subsection 3L.2.1 states that the results of these evaluations will be documented in a supplemental report. Depending on the results of the evaluations, the component may be eliminated from the FIV test program, identified for instrumentation and inclusion in the FIV test program, or further evaluated as described in DCD Tier 2, Subsection 3L.2.2. Item 5 does not apply to the steam dryer or chimney partition assembly; these components were already identified for inclusion in the FIV test program.

Currently, data for all of the equipment listed in DCD Tier 2, Table 3L-4 will be acquired during initial startup and power ascension testing. This list may be augmented or revised based on the

outcome of the ongoing FIV evaluations. The general phrase "to obtain forcing function data if problem occurs" used in DCD Tier 2, Table 3L-4 applies to the pressure transducers. The pressure data will be recorded during the testing. The measurements from these sensors are not used to measure structural vibration directly, but rather to measure the pressure variation that is often a forcing function that causes the structural vibration. These pressure sensor data are useful for determining the source of any excessive vibration amplitudes, if they are to occur during testing. Detailed evaluations of the pressure data will only be performed if the primary vibration measurements (i.e., strain gauge or accelerometer) indicate the need for further assessment. Evaluation of the steam dryer pressure sensor measurements is described in Subsection 3L.4.6 of DCD Tier 2 Appendix 3L.

DCD Impact (ref. MFN 07-194)

No DCD changes will be made in response to this RAI.

GEH Revised Response

As discussed in DCD Tier 2, Subsection 3L.2.1, all reactor internals were evaluated for susceptibility to flow induced vibration. The initial screening and evaluation of the reactor internals identified the chimney partition assembly and steam dryer for instrumentation and inclusion in the FIV test program. The prototype ESBWR steam dryer will be instrumented as described in DCD Tier 2, Subsection 3.9.2.4 (will be revised to include steam dryer as stated in RAI 3.9-61 response) and Subsection 3L.4.6 of DCD, Tier 2, Appendix 3L. ~~The prototype ESBWR chimney partitions will be instrumented as described in Section 3L.5 of DCD, Tier 2, Appendix 3L.~~ The initial screening eliminated the Control Rod Guide Tubes (CRGTs), In-Core Monitor Guide Tubes (ICMGTs), and In-Core Monitor Housings (ICMHs) from the FIV test program. The basis for eliminating these components is provided in DCD Tier 2, Subsection 3L.2.1.

More quantitative FIV evaluations ~~are ongoing~~were conducted for the remaining components identified by the initial screening: Chimney Head/Steam Separator assembly, Shroud/Chimney assembly, and the Standby Liquid Control (SLC) line. The components ~~will be~~were evaluated using the approach and criteria listed in Items 1 through 4 in DCD Tier 2, Subsection 3L.2.2~~1~~. Item 5 in DCD Tier 2, Subsection 3L.2.2~~1~~ states that the results of these evaluations are~~will be~~ documented in ~~a supplemental report~~DCD Tier 2, reference 3L-1. Depending on the results of the evaluations, the component ~~may be~~was eliminated from the FIV test program, identified for instrumentation and inclusion in the FIV test program, or further evaluated as described in DCD Tier 2, Subsection 3L.2.2. Item 5 does not apply to the steam dryer or chimney partition assembly; these components were already identified for inclusion in the FIV test program.

Currently, data for all of the equipment listed in DCD Tier 2, Table 3L-4 will be acquired during initial startup and power ascension testing. This list ~~may be augmented or~~was revised based on the outcome of the ~~ongoing~~ FIV evaluations. The general phrase "to obtain forcing function data

if problem occurs" used in DCD Tier 2, Table 3L-4 applies to the pressure transducers. The pressure data will be recorded during the testing. The measurements from these sensors are not used to measure structural vibration directly, but rather to measure the pressure variation that is often a forcing function that causes the structural vibration. These pressure sensor data are useful for determining the source of any excessive vibration amplitudes, if they are to occur during testing. Detailed evaluations of the pressure data will only be performed if the primary vibration measurements (i.e., strain gauge or accelerometer) indicate the need for further assessment. Evaluation of the steam dryer pressure sensor measurements is described in Subsection 3L.4.6 of DCD Tier 2 Appendix 3L.

DCD Impact (no change)

No DCD changes will be made in response to this RAI.

NRC RAI 3.9-133 S01

RAI 3.9-133 S01 Comment on response to RAI 3.9-133 (MFN 07-194):

In its response to RAI 3.9-133, the applicant committed to instrumenting the prototype ESBWR steam dryer per DCD Tier 2, Subsection 3.9.2.4 and Subsection 3L.4.6 of DCD, Tier 2, Appendix 3L, and the prototype ESBWR chimney partitions, per Section 3L.5 of DCD, Tier 2, Appendix 3L. The applicant clarifies Item 5 in DCD, Tier 2, Section 3L.2.1 (page 3L-4), stating that the statement, FIV will not be an issue, does not apply to the steam dryer or chimney partition assembly. The applicant has also clarified that vibration data for all equipment listed in DCD Tier 2, Table 3L.4 will be acquired during initial startup and power ascension testing. Pressure data, however, while recorded during startup testing, will not be evaluated in detail unless the primary vibration measurements indicate the need for further assessment. The staff finds the applicant's response acceptable, however, the applicant is requested to revise the DCD, Tier 2, Section 3.9.5 to include the above clarifications.

GEH Response

The requested clarifications have been made to Section 3L.2.

Section 3.9.5 provides a top level description of the reactor vessel internals, design basis loads to be considered in the structural evaluations, and the corresponding acceptance critieria. Section 3.9.5 does not present the results of any of the analyses for the reactor internals. The clarifications requested in the RAI supplement refer to the results of the FIV screening assessment performed in Section 3L.2; therefore, it is not appropriate to include these text changes in Section 3.9.5

DCD Impact

DCD Tier 2 Subsections 3L.2.1, 3L.2.2. and Tables 3L-4 and 3L-5 were revised in DCD Tier 2 rev. 4 and are highlighted in the attached DCD Tier 2 rev. 5 markup.

NRC RAI 3.9-134

GE states that most recent BWR steam dryer fatigue failures have been caused by 'strong narrow-band pressure loads' at frequencies between 120 and 200 Hz that emanate from acoustic resonances in the safety relief valve (SRV) standpipes (DCD Tier 2, Section 3L.4.4, page 3L-8),and that 'the ESBWR SRV standpipe design is intended to reduce or eliminate acoustic resonances in these branch lines'.

a. GE is requested to describe the design of the ESBWR SRV standpipes summarizing (1) dimensions of the SRVs, standpipes, and the MSLs; (2) expected steam flow speeds near the SRV standpipes; (3) plant power levels at which acoustic resonances in the standpipes might be strongly excited, along with the frequencies of the resonances and their expected amplitudes; and (4) the proximity of various SRVs to each other on individual MSLs.

b. GE plans to limit the data acquisition, signal processing, and data interpretation of all FIV testing during prototype ESBWR power ascension to frequencies below 200 Hz (and, in some cases, below 100 Hz), as shown in DCD Tier 2, Tables 3L-5 and 3L-6, and described in DCD Tier 2, Section 3L.5.4. GE is requested to justify this frequency limit based on submission of complete SRV standpipe ESBWR design criteria in part (a).

c. In addition to the instrumentation for the steam dryer in the prototype ESBWR for FIV testing, GE is requested to submit a list of instrumentation planned for the SRVs and MSLs, and justification where such instrumentation will not be installed.

GEH Response (ref. MFN 07-268)

a.) The ESBWR SRV standpipe design is currently under evaluation. The entrance to the standpipe is being designed to minimize the resonant feedback effect on the shear layer instability, thus minimizing the amplitude of potential resonances in the standpipe. Scale model testing will be performed on the individual MSLs in order to determine the optimum locations that minimize valve-to-valve interaction.

b.) The frequency ranges shown in DCD Tier 2, Tables 3L-5 and 3L-6, and described in DCD Tier 2, Section 3L.5.4 are approximate. The frequency ranges being monitored in the FIV test program will be adjusted to bound the range of frequencies determined in the FIV evaluations for the final ESBWR design.

c.) For main steam line acoustic monitoring, at least 2 locations will be monitored on each MSL in the containment. The instruments at each location will include either a minimum of 4 strain gages orientated in the hoop direction or 1 piezoelectric pressure transmitter mounted flush with the inside wall of the pipe. The data sampling rate will be high enough to resolve the frequencies

associated with potential acoustic resonances in the SRV standpipes. The amplification and sensitivity and max sample rate of the data acquisition equipment will be sufficient to define temporal acoustic steam line data.

DCD Impact (ref. MFN 07-268)

DCD Tier #2, Subsections 3L.4.4 and 3L.5.4, Tables 3L-5 and 3L-6 were revised in revision 3 as noted in the attached markup.

GEH Revised Response

a.) The ESBWR SRV standpipe design is currently under evaluation. The entrance to the standpipe is being designed to minimize the resonant feedback effect on the shear layer instability, thus minimizing the amplitude of potential resonances in the standpipe. Scale model testing will be performed on the individual MSLs in order to determine the optimum locations that minimize valve-to-valve interaction.

b.) The frequency ranges shown in DCD Tier 2, Tables 3L-5 and 3L-6, and described in DCD Tier 2, Section 3L.5.54 are approximate. The frequency ranges being monitored in the FIV test program will be adjusted to bound the range of frequencies determined in the FIV evaluations for the final ESBWR design.

c.) For main steam line acoustic monitoring, at least 2 locations will be monitored on each MSL in the containment. The instruments at each location will include either a minimum of 4 strain gages orientated in the hoop direction or 1 piezoelectric pressure transmitter mounted flush with the inside wall of the pipe. The data sampling rate will be high enough to resolve the frequencies associated with potential acoustic resonances in the SRV standpipes. The amplification and sensitivity and max sample rate of the data acquisition equipment will be sufficient to define temporal acoustic steam line data.

DCD Revised Impact

DCD Tier #2~~, Subsections 3L.4.4 and 3L.5.4,~~ Tables 3L-5 and 3L-6 were revised in revision 3~~ as noted in the attached markup~~.

NRC RAI 3.9-134 S01

The following Supplementary RFI was received from the NRC (Chandu Patel) on July 10, 2007, via e-mail to Jim Rogers.

Comment on response to RAI 3.9-134 (MFN 07-268, May 16, 2007):

GHNE is requested to provide the following information after the ESBWR main steam line layout and standpipe designs are completed and the acoustic resonance conditions are characterized. Please describe the design of the ESBWR safety relief valve (SRV) standpipes summarizing (1) dimensions of the SRVs, standpipes, and the main steam lines (MSLs); (2) expected steam flow speeds near the SRV standpipes; (3) plant power levels at which acoustic resonances in the standpipes might be strongly excited, along with the frequencies of the resonances and their expected amplitudes; and (4) the proximity of various SRVs to each other on individual MSLs.

GEH Response

The dimensions of the Safety Relief Valves (SRV's) including standpipes and valve inlets are not yet determined.

The expected maximum steam flow speed in the Main Steam Lines past the entrances is expected to be in the range of current experience with ABWR.

The plant power levels at which acoustic resonances in the standpipes might be strongly excited, along with the frequencies of the resonances, will be determined after the standpipe and relief valve inlet geometric configurations and dimensions are finalized. The amplitudes of these resonances are difficult to predict because they are mutual resonances of shear flow instability past the entrance to the valve standpipes, coupled with acoustic resonance, and as such, the amplitudes are sensitive to slight geometric changes, distances among valves, proximity to elbows, and other factors that influence shear layer instabilities and acoustic interactions among standpipe/valve combinations.

The proximity of various SRV's to each other on individual MSL's has not yet been finalized.

After design information such as that described above is determined, the process to be used for the determination of susceptibility of standpipe/SRV resonances is outlined below.

1) Determine acoustic natural frequency of valve inlet and standpipe. This may be accomplished using manual calculations if the internal geometry is simple enough, recognizing that the standpipe and SRV entrance essentially form a quarter-wave tube, or by acoustic finite element analysis, with sufficient piping included for the calculation to compute the end effects at the standpipe entrance.

2) Using the maximum steam velocity, compute the Strouhal number formed as $St = \frac{fD}{U}$, with St=Strouhal number, f=acoustic frequency, D the inlet diameter, and U the steam flow velocity past the entrance.

The Strouhal number will be compared with those from standard references such as "Flow-Induced Vibration in Safety Relief Valves", by Baldwin and Simmons, ASME Journal of Pressure Vessel Technology, August 1986, Volume 108, p 267, and others. Baldwin and Simmons identify a range of Strouhal numbers of 0.25-0.6 as a region in which acoustic resonances occur. If the Strouhal number is outside this range, it is likely that there will not be an acoustic resonance. If the Strouhal number is within this range, further evaluations will be performed, and design options will be considered.

DCD Impact

No DCD changes will be made in response to this RAI.

NRC RAI 3.9-135

GE is requested to describe in detail (1) the source of the load definition of the ESBWR steam dryer, (2) the validation of the methodology used in developing the load definition, (3) the stress analysis performed using the load definition, (4) the error and uncertainties associated with the each aspect of the analysis, (5) the application of the error and uncertainties in the stress analysis, (6) the stress analysis results and comparison to acceptance criteria, and (7) the plans to confirm the steam dryer load definition and stress analysis using actual steam dryer data during plant operation.

GEH Original Response (ref. MFN 07-194)

The ESBWR steam dryer evaluations are discussed in Section 3L.4 of DCD Tier 2 Appendix 3L. Three additional references (3L-5, 3L-6 and 3L-7) were added in Section 3L.6 as part of RAI 3.9-58 response for additional information.

Detailed discussion of the source of the load definition and validation of the load definition methodology will be included in Reference 3L-5: General Electric Company, "Steam Dryer - Acoustic Load Definition," NEDC-33312P, Class III (Proprietary), and NEDO-33312, Class I (Non-Proprietary).

The steam dryer stress analysis and comparison to acceptance criteria will be included in Reference 3L-6: General Electric Company, "Steam Dryer - Structural Evaluation," NEDC-33313P, Class III (Proprietary), and NEDO-33313, Class I (Non-Proprietary).

Details regarding the confirmation of the steam dryer load definition and stress analysis during initial power ascension will be included in Reference 3L-7: General Electric Company, "Steam Dryer - Instrumentation and Power Ascension Monitoring," NEDC-33314P, Class III (Proprietary), and NEDO-33314, Class I (Non-Proprietary).

Each of these references will also address the uncertainties associated with that aspect of the overall dryer evaluation. The summation of the individual uncertainties and application to the overall evaluation will also be addressed in Reference 3L-7.

DCD Original Impact (ref. MFN 07-194)

No DCD changes will be made in response to this RAI.

GEH Revised Response

The ESBWR steam dryer evaluations are discussed in Section 3L.4 of DCD Tier 2 Appendix 3L. Two~~Three additional~~ references ~~(3L-5, 3L-6 and 3L-7)~~ were added in Section 3L.6 as part of the RAI ~~3.9-58~~ response~~ for additional information~~(also see response for RAI 3.9-58).

Detailed discussion of the source of the load definition and validation of the load definition methodology will be included in Reference 3L-5: General Electric Company, "Steam Dryer - Acoustic Load Definition," NEDE~~C~~-33312P, Class III (Proprietary), and NEDO-33312, Class I (Non-Proprietary).

The steam dryer stress analysis and comparison to acceptance criteria will be included in Reference 3L-6: General Electric Company, "Steam Dryer - Structural Evaluation," NEDE~~C~~-33313P, Class III (Proprietary), and NEDO-33313, Class I (Non-Proprietary).

~~Details regarding the~~The plans to confirm~~ation of~~ the steam dryer load definition and stress analysis using actual steam dryer data during plant operation are described in Section 3L.4.6 and will be contained in revisions to the above two referenced reports, 3L-5 and 3L-6.~~during initial power ascension will be included in Reference 3L-7: General Electric Company, "Steam Dryer - Instrumentation and Power Ascension Monitoring," NEDC-33314P, Class III (Proprietary), and NEDO-33314, Class I (Non-Proprietary).~~

Each of these references will also address the uncertainties associated with that aspect of the overall dryer evaluation. The summation of the individual uncertainties and application to the overall evaluation will also be addressed in ~~Reference 3L-7~~revisions to the above two referenced reports, 3L-5 and 3L-6.

DCD Revised Impact

~~No DCD changes will be made in response to this RAI.~~

DCD Tier 2, Section 3L.6 was revised in DCD Tier 2 Rev. 3.

LTRs NEDE-33312P Rev 0, NEDO-33312 Rev 0, NEDE-33313P Rev 0, NEDO-33313 Rev 0 were added in DCD Tier 2 Rev. 3.

NRC RAI 3.9-135 S01

RAI 3.9-135 S01 Comment on response to RAI 3.9-135 (MFN 07-194):

In its response to RAI 3.9-135, the applicant refers to the following three additional documents that are yet to be submitted:

Reference 3L 5: General Electric Company, Steam Dryer Acoustic Load Definition, NEDC 33312P, Class III (Proprietary)

Reference 3L 6: General Electric Company, Steam Dryer Structural Evaluation, NEDC 33313P, Class III (Proprietary)

Reference 3L 7: General Electric Company, Steam Dryer Instrumentation and Power Ascension Monitoring, NEDC 33314P, Class III (Proprietary).

The applicant is requested to submit these documents so that its response to RAI 3.9-135 can be evaluated.

GE Original Response (ref. MFN 07-194 Supplement 2)

Please refer to MFN 07-265, "Updated Integrated Plan and Schedule – ESBWR Design Certification Application," dated June 1, 2007, for the anticipated submittal dates for the Licensing Topical Reports referenced above.

DCD Original Impact (ref. MFN 07-194 Supplement 2)

No DCD changes will be made in response to this RAI.

GEH Revised Response

Please refer to:

-MFN 07-614 "Transmittal of Licensing Topical Report NEDE-33312P, "ESBWR Steam Dryer Load Definition," November 2007", dated November 16, 2007.

MFN 07-615 "Transmittal of Licensing Topical Report NEDE-33313P, "ESBWR Steam Dryer Structural Evaluation," November 2007", dated November 15, 2007.

~~265, "Updated Integrated Plan and Schedule – ESBWR Design Certification Application," dated June 1, 2007, f~~For the ~~anticipated~~ LTR submittal dates for the Licensing Topical Reports referenced above, except reference 3L-7 which was removed from the response.

DCD Impact (no change)

No DCD changes will be made in response to this RAI.

NRC RAI 3.9-137

In Section 3.L.4.6 of DCD, Tier 2, Appendix 3L, GE describes potential steam dryer FIV measurements, including determination of the steam dryer as-built modal parameters. Impact hammer testing will be used to determine the natural frequencies, mode shapes, and damping of the steam dryer components. The data will be used to verify portions of the steam dryer analytical models.

(a) GE is requested to discuss the planned impact hammer testing (e.g., will the testing be conducted outside the plant, or with the steam dryer installed in the plant, with the skirt partially immersed in water) for the purposes of determination of the steam dryer as-built modal parameters.

(b) Per SRP Section 3.9.2, Draft Revision 3, April 1996, GE is requested to discuss the determination of the damping of the ESBWR steam dryer, and how the damping will be applied to their stress analysis models of the steam dryer.

GEH Original Response (ref. MFN 07-194)

(a) The objective of the steam dryer hammer test is to identify the as-built frequencies and mode shapes of several key components of the steam dryer at ambient conditions. Different components of the steam dryer have different frequencies and mode shapes associated with them. The areas of interest are the drain channel, the outer hood panel, the inner hood panel, the side panel, tie bars and the skirt. These results will be used to verify portions of the finite element model of the dryer.

The concern is that local natural frequencies may coincide with existing forcing functions to cause resonance conditions. The resonance could cause high stresses to occur in localized areas of the steam dryer. A finite element modal analysis can calculate the frequency and mode shape of a component, but they are only ideal approximations to the real values due to variations such as plate thickness, welding, and residual stresses that affect the assumed boundary conditions in the finite element model. The mode shapes and frequencies determined by the hammer test will be used to validate the finite element modal analysis and determine the uncertainty in the finite element model predictions of the modal response.

The impact hammer test will be performed inside the plant with the dryer inside the dryer/separator pool. The tests will be performed with the dryer resting on simulated dryer support blocks similar to the way the dryer will be seated inside the reactor vessel. The hammer test will be performed when the installation of the sensors for in-reactor vibration measurement is completed.

Two types of impact tests will be performed on the dryer: a (1) Dry hammer test, and a (2) Wet hammer test with the steam dryer skirt and drain channels partially submerged in different water levels (to approximate in-reactor water level). Both tests will be conducted in ambient conditions. Temporary bondable accelerometers will be installed at predetermined locations for these tests. An instrumented hammer will be used to excite the steam dryer at several predetermined locations and the hammer impulse force and the structural responses from the accelerometers will be recorded on a computer. The data will then be used to compute experimental mode shape, frequency and damping of the instrumented dryer components using appropriate software. The temporary sensors will then be removed and the dryer will be cleaned prior to installation in to the reactor vessel.

(b) The structural analysis of the steam dryer will assume a damping coefficient of 1% for the vibration analyses. Higher values of damping coefficients may be considered if substantiated by test measurements including the hammer test results for the prototype ESBWR steam dryer.

DCD Original Impact (ref. MFN 07-194)

DCD Tier 2, Subsection 3L.4.6 was revised as noted in the attached DCD Tier 2 Rev. 3 markup.

GEH Revised Response

(a) The objective of the steam dryer hammer test is to identify the as-built frequencies and mode shapes of several key components of the steam dryer at ambient conditions. Different components of the steam dryer have different frequencies and mode shapes associated with them. The areas of interest are the drain channel, the outer hood panel, the inner hood panel, the side panel, divider plates~~tie bars~~ and the skirt. These results will be used to verify portions of the finite element model of the steam dryer.

The concern is that local natural frequencies may coincide with existing forcing functions to cause resonance conditions. The resonance could cause high stresses to occur in localized areas of the steam dryer. A finite element modal analysis can calculate the frequency and mode shape of a component, but they are only ideal approximations to the real values due to variations such as plate thickness, weld geometries~~ing~~, configuration tolerances and residual stresses that affect the assumed boundary conditions in the finite element model. The mode shapes and frequencies determined by the hammer test will be used to validate the finite element modal analysis and determine the uncertainty in the finite element model predictions of the modal response.

The impact hammer test will be performed ~~inside~~at the plant ~~with~~following the final assembly of the steam dryer~~ inside the dryer/separator pool~~. The tests will be performed with the dryer resting on simulated dryer support blocks similar to the way the dryer will be seated inside the reactor vessel.~~ The hammer test will be performed when the installation of the sensors for in-reactor vibration measurement is completed.~~

Two types of impact tests will be performed on the steam dryer: a (1) Dry hammer test, and a (2) Wet hammer test with the steam dryer skirt and drain channels partially submerged in different water levels (to approximate in-reactor water level). Both tests will be conducted in ambient conditions. Temporary bondable accelerometers will be installed at predetermined locations for these tests. An instrumented hammer will be used to excite the steam dryer at several predetermined locations and the hammer impulse force and the structural responses from the accelerometers will be recorded on a computer. The data will then be used to compute experimental mode shape, frequency and damping of the instrumented dryer components using appropriate software. The temporary sensors will then be removed and the steam dryer will be cleaned prior to installation in to the reactor vessel.

(b) The structural analysis of the steam dryer will assume a damping coefficient of 1% for the vibration analyses. Higher values of damping coefficients may be considered if substantiated by test measurements including the hammer test results for the ESBWR steam dryer.

DCD Revised Impact

DCD Tier 2, Subsection 3L.4.6 was revised in revision 3 and will be further revised as noted in the attached DCD Tier 2 Rev. 5~~3~~ markup.

NRC RAI 3.9-138

In Table 3L-4 of DCD, Tier 2, Appendix 3L, GE lists sensors that may be mounted to the steam dryer, the reactor dome, and other structures.

Describe the specific instrumentation, including the number of sensors and locations, to measure pressure, strain, and acceleration of steam dryer components for the purpose of providing sufficient information to evaluate the performance of the ESBWR steam dryer and to assess its continued structural capability during plant operation. As part of this description, GE is requested to explain the instrumentation specifications, including the following:

(a) How many accelerometers will be mounted to the steam dryer support ring and in what direction(s) will they be oriented?

(b) How many accelerometers will be mounted to the steam dryer skirt,and how many in circumferential positions?

(c) In what orientation(s) will the strain gages on the steam dryer hood,steam dryer drain channels, and steam dryer skirt be mounted?How many strain gages will be mounted at the above locations?

(d) How many strain gages will be mounted to the shroud, in what orientation(s), and in how many circumferential positions?

(e) Clarify the meaning of 'steam dryer FIV instrument post' for the pressure transducer to be mounted in the Vessel Dome Region.

GEH Original Response (ref. MFN 07-194)

Table 3L-4 of DCD, Tier 2, Appendix 3L provides the general locations for the FIV information. The final number, location, and orientation of the accelerometers and strain gauges will be available after the final structural evaluations are completed and the high stress locations have been determined. Details regarding the steam dryer instrumentation will be provided in a new LTR and included as Reference 3L-7 in Section 3L.6 (see response to RAI 3.9-58).

Two strain gages will be mounted on the shroud surface near the high stress points around the middle of the shroud where the stresses are expected to be the highest for the lower structural modes. The azimuth location will be determined after the completion of the final detailed structural analysis. These sensors will be augmented by the displacement sensors (LVDT) on the top guide for confirming the FIV adequacy of the shroud.

The "steam dryer FIV instrument post" is the support mast used to lead the FIV instrumentation cabling from the top of the steam dryer to the vessel head penetration. A pressure transducer is mounted on this post above the dryer in order to measure the pressure fluctuations in the vessel head region.

DCD Original Impact (ref. MFN 07-194)

No DCD changes will be made in response to this RAI. Additional references were added to DCD Tier 2 Section 3L.6 as part of response to RAI 3.9-58.

GEH Revised Response

Table 3L-4 of DCD, Tier 2, Appendix 3L provides the general locations for the FIV information. The final number, location, and orientation of the accelerometers and strain gauges will be available after the final structural evaluations are completed and the high stress locations have been determined. Details regarding the steam dryer instrumentation ~~will be~~are provided ~~in a new LTR and included as Reference 3L-7~~ in Section 3L.4.6 ~~(see response to RAI 3.9-58)~~.

Two strain gages will be mounted on the shroud surface near the high stress points around the ~~middle~~ bottom of the shroud where the stresses are expected to be the highest for the lower structural modes. The azimuth location will be determined after the completion of the final detailed structural analysis. ~~These sensors will be augmented by the displacement sensors (LVDT) on the top guide for confirming the FIV adequacy of the shroud.~~

The "steam dryer FIV instrument post" is the support mast used to lead the FIV instrumentation cabling from the top of the steam dryer to the vessel head penetration. A pressure transducer is mounted on this post above the dryer in order to measure the pressure fluctuations in the vessel head region.

DCD Revised Impact

No DCD changes will be made in response to this RAI.

NRC RAI 3.9-138 S01

RAI 3.9-138 S01 Comment on response to RAI 3.9-138 (MFN-07-194):

In its response to parts (a), (b) and (c) of the RAI 3.9-138 in a letter (MFN 07-194) from J. C. Kinsey of GE to USNRC, dated April 2, 2007, the applicant refers to a report - Reference 3L 7: General Electric Company, Steam Dryer Instrumentation and Power Ascension Monitoring, NEDC 33314P, Class III (Proprietary), which is not yet available for review. Even though the applicant provides some insight on planned dryer instrumentation [parts (a)-(c)], which will be placed near regions where the highest fluctuating stresses are expected, the information provided to date is not sufficient to address fully the RAI. Please provide the remaining information requested in original RAI 3.9-138.

GEH Response

As stated in the revised response to RAI 3.9-138, the final number, location, and orientation of the accelerometers and strain gauges will be available after the final structural evaluations are completed and the high stress locations have been determined. The number and orientation of the strain gages and accelerometers is chosen so that the limiting locations (locations with the lowest margin to fatigue acceptance criteria from the results of stress analysis) on the steam dryer are monitored with redundancy in case there is failure of instrumentation sensors during the startup monitoring program. GEH past experience with the instrumentation of steam dryers has shown that 3 to 4 strain gages on the steam dryer skirt/drain channels and 4 to 5 strain gages on the upper steam dryer structure is sufficient for adequate monitoring of the steam dryer highest stressed locations. GEH experience has shown that two accelerometers, one mounted horizontally and the other mounted vertically can adequately monitor the rigid body motion of the support ring that would be indicative of steam dryer rocking. Additional accelerometers, as deemed necessary based on the results of the FIV stress analysis are mounted on the steam dryer skirt and dryer hood to act as backup to the steam dryer mounted strain gages.

DCD Impact

No DCD changes will be made in response to this RAI.

NRC RAI 3.9-141

In GE Report MFN 06-012 (NEDE-33259P), GE describes testing of the prototype ABWR plant in Japan, and provides a table of selected FIV parameters measured in the ABWR and estimated for the ESBWR. However, GE did not include steam dryer data in the table. To justify GE's classification of the ESBWR dryer as a Category II Non-Prototype (per Regulatory Guide 1.20, Revision 2, May 1981), GE is requested to provide ABWR or other valid prototype steam dryer FIV data relevant to the ESBWR design criteria, such as the presence of any strong tones in ABWR or other valid prototype, and ESBWR steam dryer FIV response. the fluctuating pressure loads incident on the steam dryer surfaces. Also, GE is requested to estimate any differences between the ABWR or other valid prototype, and ESBWR steam dryer FIV response.

GE Original Response (ref. MFN 07-194)

The prototype for the ESBWR steam dryer is the replacement dryer recently tested and installed in several BWR/3 plants that had experienced high pressure loads under extended power uprate operating conditions. These loads were characterized by an abnormally high pressure tone at approximately 155 Hz that emanated from an acoustic resonance in one or more of the SRV standpipes. The replacement dryer was specifically designed to withstand the flow-induced vibration and acoustic resonance loading that led to fatigue failures in the dryers for these plants. As described in Subsection 3L.4.4 of DCD Tier 2, Appendix 3L, the ESBWR SRV standpipe design is intended to reduce or eliminate acoustic resonances in these branch lines, thus reducing or eliminating this load on the dryer. Table 3L-1 provides a comparison between major configuration parameters of the ESBWR and the prototype replacement steam dryer.

DCD Orignal Impact (ref. MFN 07-194)

DCD Tier 2, Subsection 3L.4.1 and Table 3L-1 were revised as noted in the attached DCD Tier 2 Rev. 3 markup.

GEH Revised Response

The prototype for the ESBWR steam dryer will build on the successful operating experience of the ABWR steam dryer. The ESBWR steam dryer also draws experience from operating plant replacement steam dryer program's fabrication, testing and performance. Steam ~~is the replacement~~ dryers recently tested and installed in ~~several~~ BWR/3 and BWR/4 plants ~~that~~ had experienced high pressure loads under extended power uprate operating conditions. These loads were characterized by an abnormally high pressure tone at approximately 155 Hz that emanated from an acoustic resonance in one or more of the SRV standpipes. The replacement steam dryers were ~~was~~ specifically designed to withstand the flow-induced vibration and acoustic resonance loading that led to fatigue failures in the dryers for these plants.

As described in Subsection 3L.4.4 of DCD Tier 2, Appendix 3L, the ESBWR SRV standpipe design is intended to reduce or eliminate acoustic resonances in these branch lines, thus reducing or eliminating this load on the steam dryer.
Table 3L-1 provides a comparison between major configuration parameters of the ESBWR, ABWR prototype and a ~~the prototype~~ BWR/3 replacement steam dryer.

DCD Revised Impact

DCD Tier 2, Subsection 3L.4.1 and Table 3L-1 were revised in DCD Tier 2 Rev. 3 and will be further revised as noted in the attached DCD Tier 2 Rev. 5~~3~~ markup.

NRC RAI 3.9-144

A. Describe the power ascension plan for the ESBWR that includes the following aspects:

(a) For initial startup, plant data at the ESBWR will be collected from instrumentation mounted directly on the steam dryer at significant locations (including the outer hood and skirt, and other potential high stress locations) to verify that the stress on individual steam dryer components is within allowable limits during plant operation.

(b) The instrumentation directly mounted on the steam dryer will provide sufficient information to perform an accurate stress analysis of all steam dryer components, and will include pressure sensors, strain gages, and accelerometers.

(c) The main steam lines in the ESBWR will be instrumented to collect data to determine steam pressure fluctuations in order to identify the presence of acoustic resonances and to allow the analysis of those pressure fluctuations to calculate steam dryer loading and stress.

(d) The direct steam dryer data will be used to calibrate the MSL instrumentation and data analysis prior to the removal or failure of the steam dryer instrumentation.

(e) The steam, feedwater, and condensate lines and associated components, including safety relief valves and power-operated valves and their actuators, will be instrumented to measure vibration during plant operation to demonstrate that short-term and long-term qualification limits are not exceeded for the piping and individual components.

B. Describe the ESBWR startup test procedure that includes the following:

(a) the stress limit curve to be applied for evaluating steam dryer performance;

(b) specific hold points and their duration during power ascension with sufficient time intervals for interaction with NRC staff during power ascension;

(c) activities to be accomplished during hold points that are of sufficient duration to accomplish those activities;

(d) plant parameters to be monitored;

(e) inspections and walkdowns to be conducted for steam, feedwater,and condensate systems and components during the hold points;

(f) the method to be used to trend plant parameters;

(g) acceptance criteria for monitoring and trending plant parameters,and conducting the walkdowns and inspections; and,

(h) actions to be taken if acceptance criteria are not satisfied.

GEH Original Response (ref. MFN 07-325)

Response to RAI 3.9-144 A (a) through (d):

The steam dryer instrumentation and power ascension plan is described in Subsection 3L.4.6 of DCD, Tier 2, Appendix 3L. Details regarding the confirmation of the ESBWR steam dryer load definition and stress analysis during initial power ascension will be provided in a future reference report: General Electric Company, "Steam Dryer - Instrumentation and Power Ascension Monitoring," NEDC-33314P, Class III (Proprietary), and NEDO-33314, Class I (Non-Proprietary). See RAI 3.9-58 Response.

Response to RAI 3.9-144 A (e):

The response to RAI 3.9-20 includes the methodology to develop the startup criteria and the required instrumentation for these piping systems and the valve operators. These criteria will demonstrate that short-term and long-term qualification limits are not exceeded.
The instrumentation for steam, feedwater and isolation condenser piping systems are listed in the following table and will be used to measure vibration during plant operation to demonstrate that short-term and long-term qualification limits are not exceeded for the piping and individual components. The information will be included in the startup test documentation.
The following gages are required for each line inside the containment (Note 1). The measurements for main steam acoustic load are not included. (Note 2).

Pipe lines	Gage type	Location	Number of gages	Remark
Each Main steam (2 lines needed, line 1&2)	Displacement (LVDT)	MS pipe, lateral directions	4	Test specification specify exact locations
	Accelerometers (Acc)	SRV valve (2 locations, X,Y and Z)	6	Same as above
	Accelerometers (Acc)	MSIV valve (2 locations)	6	Same as above
	Strain gages (SG)	SRV branch (2 locations)	4	Same as above
Each Feedwater System (Note 3)	Displacement (LVDT)	FW pipe (2 locations)	6	Same as above
	Strain gages (SG)	FW pipe (2 locations)	6	Same as above

Pipe lines	Gage type	Location	Number of gages	Remark
Isolation Condenser (Condensate line, one system selected) (Note 4)	Displacement (LVDT)	Condensate line at RPV 160 degrees	3	Test specification specify exact locations
	Accelerometers (Acc)	Condensate lines at RPV 160 degrees. Normally closed valve operators	6	Same as above
	Strain gages (SG)	Condensate line at RPV 160 degrees	3	Same as above
Isolation Condenser (Steam line)	Displacement (LVDT)	Steam lines at RPV 135 degrees	3	Test specification specify exact locations
	Accelerometers (Acc)	Steam lines at RPV 135 degrees Normally opened valve operators	3	Same as above

Note 1 : The instrumentation set up will insure that the piping displacements and the vibration stresses of the piping system are within the ASME allowable limits. Detail gage setup and number of gages may be changed during the actual design process. The gages for all other systems, such as condensate piping of the Isolation Condenser system, will be instrumented after the stress analyses are completed and used to determine the most critical locations.

Note 2 : The instrumentation does not include the strain gage setup for the dryer to measure the acoustic resonance in the main steam pipe due to the SRVs. These measurements use pairs of strain gages in the circumferential direction of the pipe. The gages are located before and after the valves. The gages are located on the pipe at locations free from stress concentrations.

Note 3 For FW pipe outside the containment, hand held vibration instrumentation will be used to measure the piping and valve operator vibration during walk downs and at startup hold points.

Note 4 The valve operability tests are not in the scope of this table.

Response to RAI 3.9-144 B (a):

The ESBWR start up test program is discussed in Section 3L.5 of DCD, Tier 2, Appendix 3L. The fatigue analysis performed for the ESBWR steam dryer will use a fatigue stress limit of 13.6 ksi. For the outer hood component, which is subjected to higher pressure loading in the region of the main steam lines, the fatigue stress limit will be 10.8 ksi. The higher stress limit is justified because the dryer is a non-safety component, performs no safety functions, and is only required to maintain its structural integrity (no loose parts generated) for normal, transient, and accident conditions.

Response to RAI 3.9-144 B (b):

The ESBWR startup test program schedule, as outlined in DCD2 Subsection 14.2.7, consists of three testing phases: initial fuel loading and open vessel testing, testing during nuclear heatup to rated temperature and pressure (less than 5% power), and power operation testing from 5% to 100% rated power. The power operation testing phase is further divided into three power ascension test conditions; low power testing at less than 25% power, mid-power testing up to about 75% power, and high power testing up to rated power.

Each of these five testing plateaus has a window for testing and a non-testing interval when operating conditions are not increased. Testing windows will be scheduled to include time to perform all required testing. Following completion of testing in each window, test data and results are reviewed, evaluated and approved by the startup organization as described in Subsection 14.2.2. Some tests late in the window will have their reviews, evaluations and approvals completed during the subsequent non-testing interval.

During these non-testing intervals, the plant could be held at the last satisfactorily tested power level or may recommence startup and power ascension to return to that level if the final test involved a scram. Activities taking place during these periods include: final test result approvals, approval of overall test phase results and authorization to proceed with the next plateau's testing by the licensee. These non-testing periods between the test plateaus extend from the plateau testing completion milestone to the authorization to continue startup testing/power ascension milestone, and may be a few days in length.

It has been the convention that licensees maintain communications with the NRC during their approval process and consult with the NRC prior to their authorization to continue the power ascension testing. As the startup test schedule, startup administrative manual, licensee's overall results approval and power ascension authorization processes have not been prepared, the durations of these non-testing periods are currently not known. Also, details of the licensee-NRC communication protocols are not available at this time.

These non-testing intervals would be one form of hold point in the startup test program schedule in which all testing in that plateau is reviewed and approved, and authorization to proceed with the power ascension is granted. All NRC staff interactions are anticipated to be satisfied or mutually agreed upon resolutions put in place before the licensee authorizes the continuation of startup testing.

The other hold point would be one during the plateau's testing sequence, as indicated in DCD2 Subsection 14.2.7. Examples could include: the satisfactory review and approval of an earlier piping system's flow induced vibration test results as a prerequisite to a later transient test where the piping vibration of the same system is being evaluated, or necessary control system tuning that has to be performed before a subsequent test where its results are affected by the control system performance.

Response to RAI 3.9-144 B (c):

In the first hold point, because review and approval of all the tests in a test phase (re: DCD2 Table 14.2-1), overall test phase results approval, and power ascension authorization are required to be completed before the non-testing interval ends, its duration will be adjusted to accommodate these efforts. In the latter, other plateau testing would continue where the test conditions and prerequisites are met. Plus, tests that were performed earlier in the test plateau sequence could have their results reviewed and approved.

During the non-testing periods, operations and startup personnel will continue to monitor the plant equipment and parameters. Maintenance activities necessary to support continuing operations and startup testing (e.g., recharge demineralizers, calibrate instrumentation, fine-tune control systems, replace temporary sensors) would be performed. Any of these activities that are deemed essential for the startup testing/power ascension will be scheduled for completion prior to the power ascension authorization being given.

Response to RAI 3.9-144 B (d):

During the testing and non-testing periods the full complement of power plant parameters will continue to be monitored by operations personnel. Startup personnel will also continue to monitor plant systems under startup testing and temporary startup test sensor systems. Additionally, the startup organization will support operations' plant data and system performance reviews.

Response to RAI 3.9-144 B (e):

Startup personnel and equipment specialists will closely monitor these systems through power ascension and startup testing. During non-testing intervals, the test personnel periodically monitor these systems and support operations plant monitoring. Testing on these systems includes: overall system and equipment performance, related control system testing, and transient testing related to potential equipment failures and plant trips. Operations will continue to make their regular walkdowns of the accessible areas of the plant recording remote instrument data and observing operating equipment throughout the startup testing period.

Response to RAI 3.9-144 B (f):

The principle means of trending plant parameters is via the plant process computer. Because data is available to this computer system from plant-wide instruments, data can be recorded and plotted, it will be a key tool in gathering, evaluating and trending plant parameters. Trending may also be performed on other computer systems, with data from: the process computer, other plant computers, test data acquisition systems, and operator round logs. These other systems could be either on site or off, be dedicated to specific functions, and be available to technical experts to support evaluation. All plant parameter trends applicable to test procedure acceptance

criteria and supporting result evaluations will be available in the on-site test records for the licensee's overall test phase results approval.

Response to RAI 3.9-144 B (g):

Some plant parameters will be compared against acceptance criteria that are derived from Technical Specifications, system design limitations and equipment protective settings. Other acceptance criteria for the normal operating values will be determined from plant heat balances, system operating models and experience gained from preoperational and startup testing. In addition, monitored and trended plant parameters can be compared against the operating and testing experience from other BWR plants, on similar power plant systems, and with industry operating experience.

Individuals knowledgeable in the systems, structures and components being tested will perform these walkdowns and inspections. Acceptance criteria are reviewed before hand and results considered that are both the expected conditions and unacceptable findings. In addition, any unexpected observations, like signs of water or steam, unusual sounds, are reported for further evaluation. Operations walkdowns would be performed with procedural guidance on acceptance criteria for the remote data being collected and equipment being inspected.

Response to RAI 3.9-144 B (h):

Acceptance criteria are categorized; Level 1, Level 2 or Level 3, and actions taken when a criterion is not satisfied are prescribed by their categorization.

Level 1

A Level 1 criterion relates to the value of process variables assigned in the design or analysis of the plant and component systems or associated equipment. Violation of these Level 1 criteria may have plant operational or plant safety implications. Therefore, if a Level 1 test criterion is not satisfied, the plant must be placed in a suitable hold condition that is judged to be satisfactory and safe based on the results of prior testing. Plant operating or test procedures or Technical Specifications may guide the decision on the direction to be taken.

Resolution of the problem must immediately be pursued by appropriate equipment adjustments or through engineering support, including offsite personnel if needed. Following resolution, the applicable test portion must be repeated to verify that the Level 1 requirement is ultimately satisfied. A description of the problem resolution shall be included in the report documenting the successful test.

Level 2

Level 2 criteria are specified either as:

a) key plant, system or equipment performance requirements that are consistent with the plant contract specification, individual system or equipment design specification values or requirements for the measured response, or

b) the expected plant response predicted by best estimate computer code and the desired trip avoidance margins as applicable to plant transient testing.

If all Level 2 criteria requirements in a test are ultimately satisfied, there is no need to document a temporary failure in the test report unless there is an educational benefit involved. Following resolution, the applicable test portion must be repeated to verify that the Level 2 criteria requirement is satisfied.

If a Level 2 criteria requirement is not satisfied after a reasonable effort, then the cognizant design and engineering organization may choose to document the results with a full explanation of their recommendations. Therefore, all Level 2 criteria requirements may not be satisfied provided that overall system performance is deemed to be acceptable based upon the design and engineering's recommendations. The specific action(s) as required in dealing with the criteria violations and other test exceptions or anomalies shall be consulted at the site based upon the startup administrative manual.

Level 3

Level 3 criteria are associated with specifications of the expected or desired performance of individual components or inner control loop transient performance. Meeting Level 3 criteria helps assure that overall system and plant response requirements are satisfied. Therefore, Level 3 criteria are to be viewed as highly desirable rather than required to be satisfied. Good engineering judgment is necessary in the application of these rules.

Because overall system performance is a mathematical function of its individual components, one component whose performance is slightly less than specified can be accepted provided that a system adjustment elsewhere will positively overcome this small deficiency. Large deviations from Level 3 performance requirements are not allowable.

If a Level 3 criterion requirement is not satisfied, the subject component or inner loop shall be analyzed closely. However, if all Level 1 and Level 2 criteria are satisfied, then it is not required to repeat the transient test to satisfy the Level 3 performance requirements. The occurrence of this Level 3 criterion failure shall be documented in the test report.

DCD Original Impact (ref. MFN 07-325)

Response to RAI 3.9-144 A (a) through (d):

DCD Tier #2 rev. 2, Section 3L.6 was revised as noted in the attached markup of DCD2 rev. 3.

Response to RAI 3.9-144 A (e):

No DCD changes will be made in response to this RAI.

Response to RAI 3.9-144 B (a):

DCD2 rev. 2, Subsection 3.9.2.3 and Appendix 3L.5.5.2 were revised as noted in the attached markup of DCD Tier #2 rev. 3.

Response to RAI 3.9-144 B (b) through (h):

No DCD changes will be made in response to this RAI.

GEH Revised Response

Revised Response to RAI 3.9-144 A (a) through (d) [revised response]:

The steam dryer instrumentation and power ascension plan is described in Subsection 3L.4.6 of DCD, Tier 2, Appendix 3L and RAI 3.9-138S01. ~~Details regarding the confirmation of the ESBWR steam dryer load definition and stress analysis during initial power ascension will be~~

~~provided in a future reference report: General Electric Company, "Steam Dryer - Instrumentation and Power Ascension Monitoring," NEDC-33314P, Class III (Proprietary), and NEDO-33314, Class I (Non-Proprietary). See RAI 3.9-58 Response.~~

Response to RAI 3.9-144 A (e) [no change]:

The response to RAI 3.9-20 includes the methodology to develop the startup criteria and the required instrumentation for these piping systems and the valve operators. These criteria will demonstrate that short-term and long-term qualification limits are not exceeded.

The instrumentation for steam, feedwater and isolation condenser piping systems are listed in the following table and will be used to measure vibration during plant operation to demonstrate that short-term and long-term qualification limits are not exceeded for the piping and individual components. The information will be included in the startup test documentation.

The following gages are required for each line inside the containment (Note 1). The measurements for main steam acoustic load are not included. (Note 2).

Pipe lines	**Gage type**	**Location**	**Number of gages**	**Remark**
Each Main steam (2 lines needed, line 1&2)	Displacement (LVDT)	MS pipe, lateral directions	4	Test specification specify exact locations
	Accelerometers (Acc)	SRV valve (2 locations, X,Y and Z)	6	Same as above
	Accelerometers (Acc)	MSIV valve (2 locations)	6	Same as above
	Strain gages (SG)	SRV branch (2 locations)	4	Same as above
Each Feedwater System (Note 3)	Displacement (LVDT)	FW pipe (2 locations)	6	Same as above
	Strain gages (SG)	FW pipe (2 locations)	6	Same as above
Isolation Condenser (Condensate line, one system selected) (Note 4)	Displacement (LVDT)	Condensate line at RPV 160 degrees	3	Test specification specify exact locations
	Accelerometers (Acc)	Condensate lines at RPV 160 degrees. Normally closed	6	Same as above

Pipe lines	Gage type	Location	Number of gages	Remark
		valve operators		
	Strain gages (SG)	Condensate line at RPV 160 degrees	3	Same as above
Isolation Condenser (Steam line)	Displacement (LVDT)	Steam lines at RPV 135 degrees	3	Test specification specify exact locations
	Accelerometers (Acc)	Steam lines at RPV 135 degrees Normally opened valve operators	3	Same as above

Note 1 : The instrumentation set up will insure that the piping displacements and the vibration stresses of the piping system are within the ASME allowable limits. Detail gage setup and number of gages may be changed during the actual design process. The gages for all other systems, such as condensate piping of the Isolation Condenser system, will be instrumented after the stress analyses are completed and used to determine the most critical locations.

Note 2 : The instrumentation does not include the strain gage setup for the dryer to measure the acoustic resonance in the main steam pipe due to the SRVs. These measurements use pairs of strain gages in the circumferential direction of the pipe. The gages are located before and after the valves. The gages are located on the pipe at locations free from stress concentrations.

Note 3 For FW pipe outside the containment, hand held vibration instrumentation will be used to measure the piping and valve operator vibration during walk downs and at startup hold points.

Note 4 The valve operability tests are not in the scope of this table.

Response to RAI 3.9-144 B (a):[revised response]

The ESBWR start up test program is discussed in Section 3L.5 of DCD, Tier 2, Appendix 3L. The fatigue analysis performed for the ESBWR steam dryer will use a fatigue stress limit of 13.6 ksi. For all critical locations, including the outer bank hood component, which ~~is~~are subjected to higher pressure loading in the region of the main steam lines, the fatigue stress amplitude limit ~~will be~~is 10.8 ksi. The ~~higher~~ stress limit is justified because the dryer is a non-safety component, performs no safety functions, and is only required to maintain its structural integrity (no loose parts generated) for normal, transient, and accident conditions.

Response to RAI 3.9-144 B (b):[editorial changes]

The ESBWR startup test program schedule, as outlined in DCD, Tier 2, Subsection 14.2.7, consists of three testing phases: initial fuel loading and open vessel testing, testing during nuclear

heatup to rated temperature and pressure (less than 5% power), and power operation testing from 5% to 100% rated power. The power operation testing phase is further divided into three power ascension test conditions; low power testing at less than 25% power, mid-power testing up to about 75% power, and high power testing up to rated power.

Each of these five testing plateaus has a window for testing and a non-testing interval when operating conditions are not increased. Testing windows will be scheduled to include time to perform all required testing. Following completion of testing in each window, test data and results are reviewed, evaluated and approved by the startup organization as described in Subsection 14.2.2. Some tests late in the window will have their reviews, evaluations and approvals completed during the subsequent non-testing interval.

During these non-testing intervals, the plant could be held at the last satisfactorily tested power level or may recommence startup and power ascension to return to that level if the final test involved a scram. Activities taking place during these periods include: final test result approvals, approval of overall test phase results and authorization to proceed with the next plateau's testing by the licensee. These non-testing periods between the test plateaus extend from the plateau testing completion milestone to the authorization to continue startup testing/power ascension milestone, and may be a few days in length.

It has been the convention that licensees maintain communications with the NRC during their approval process and consult with the NRC prior to their authorization to continue the power ascension testing. As the startup test schedule, startup administrative manual, licensee's overall results approval and power ascension authorization processes have not been prepared, the durations of these non-testing periods are currently not known. Also, details of the licensee-NRC communication protocols are not available at this time.

These non-testing intervals would be one form of hold point in the startup test program schedule in which all testing in that plateau is reviewed and approved, and authorization to proceed with the power ascension is granted. All NRC staff interactions are anticipated to be satisfied or mutually agreed upon resolutions put in place before the licensee authorizes the continuation of startup testing.

The other hold point would be one during the plateau's testing sequence, as indicated in DCD, Tier 2, Subsection 14.2.7. Examples could include: the satisfactory review and approval of an earlier piping system's flow induced vibration test results as a prerequisite to a later transient test where the piping vibration of the same system is being evaluated, or necessary control system tuning that has to be performed before a subsequent test where its results are affected by the control system performance.

Response to RAI 3.9-144 B (c): [editorial change]

In the first hold point, because review and approval of all the tests in a test phase (re: DCD, Tier 2, Table 14.2-1), overall test phase results approval, and power ascension authorization are required to be completed before the non-testing interval ends, its duration will be adjusted to accommodate these efforts. In the latter, other plateau testing would continue where the test conditions and prerequisites are met. Plus, tests that were performed earlier in the test plateau sequence could have their results reviewed and approved.

During the non-testing periods, operations and startup personnel will continue to monitor the plant equipment and parameters. Maintenance activities necessary to support continuing

operations and startup testing (e.g., recharge demineralizers, calibrate instrumentation, fine-tune control systems, replace temporary sensors) would be performed. Any of these activities that are deemed essential for the startup testing/power ascension will be scheduled for completion prior to the power ascension authorization being given.

Response to RAI 3.9-144 B (d): [no change]

During the testing and non-testing periods the full complement of power plant parameters will continue to be monitored by operations personnel. Startup personnel will also continue to monitor plant systems under startup testing and temporary startup test sensor systems. Additionally, the startup organization will support operations' plant data and system performance reviews.

Response to RAI 3.9-144 B (e): [no change]

Startup personnel and equipment specialists will closely monitor these systems through power ascension and startup testing. During non-testing intervals, the test personnel periodically monitor these systems and support operations plant monitoring. Testing on these systems includes: overall system and equipment performance, related control system testing, and transient testing related to potential equipment failures and plant trips. Operations will continue to make their regular walkdowns of the accessible areas of the plant recording remote instrument data and observing operating equipment throughout the startup testing period.

Response to RAI 3.9-144 B (f): [no change]

The principle means of trending plant parameters is via the plant process computer. Because data is available to this computer system from plant-wide instruments, data can be recorded and plotted, it will be a key tool in gathering, evaluating and trending plant parameters. Trending may also be performed on other computer systems, with data from: the process computer, other plant computers, test data acquisition systems, and operator round logs. These other systems could be either on site or off, be dedicated to specific functions, and be available to technical experts to support evaluation. All plant parameter trends applicable to test procedure acceptance criteria and supporting result evaluations will be available in the on-site test records for the licensee's overall test phase results approval.

Response to RAI 3.9-144 B (g): [no change]

Some plant parameters will be compared against acceptance criteria that are derived from Technical Specifications, system design limitations and equipment protective settings. Other acceptance criteria for the normal operating values will be determined from plant heat balances, system operating models and experience gained from preoperational and startup testing. In addition, monitored and trended plant parameters can be compared against the operating and testing experience from other BWR plants, on similar power plant systems, and with industry operating experience.

Individuals knowledgeable in the systems, structures and components being tested will perform these walkdowns and inspections. Acceptance criteria are reviewed before hand and results considered that are both the expected conditions and unacceptable findings. In addition, any unexpected observations, like signs of water or steam, unusual sounds, are reported for further evaluation. Operations walkdowns would be performed with procedural guidance on acceptance criteria for the remote data being collected and equipment being inspected.

Response to RAI 3.9-144 B (h) [no change]:

Acceptance criteria are categorized; Level 1, Level 2 or Level 3, and actions taken when a criterion is not satisfied are prescribed by their categorization.

Level 1

A Level 1 criterion relates to the value of process variables assigned in the design or analysis of the plant and component systems or associated equipment. Violation of these Level 1 criteria may have plant operational or plant safety implications. Therefore, if a Level 1 test criterion is not satisfied, the plant must be placed in a suitable hold condition that is judged to be satisfactory and safe based on the results of prior testing. Plant operating or test procedures or Technical Specifications may guide the decision on the direction to be taken.

Resolution of the problem must immediately be pursued by appropriate equipment adjustments or through engineering support, including offsite personnel if needed. Following resolution, the applicable test portion must be repeated to verify that the Level 1 requirement is ultimately satisfied. A description of the problem resolution shall be included in the report documenting the successful test.

Level 2

Level 2 criteria are specified either as:

a) key plant, system or equipment performance requirements that are consistent with the plant contract specification, individual system or equipment design specification values or requirements for the measured response, or

b) the expected plant response predicted by best estimate computer code and the desired trip avoidance margins as applicable to plant transient testing.

If all Level 2 criteria requirements in a test are ultimately satisfied, there is no need to document a temporary failure in the test report unless there is an educational benefit involved. Following resolution, the applicable test portion must be repeated to verify that the Level 2 criteria requirement is satisfied.

If a Level 2 criteria requirement is not satisfied after a reasonable effort, then the cognizant design and engineering organization may choose to document the results with a full explanation of their recommendations. Therefore, all Level 2 criteria requirements may not be satisfied provided that overall system performance is deemed to be acceptable based upon the design and engineering's recommendations. The specific action(s) as required in dealing with the criteria violations and other test exceptions or anomalies shall be consulted at the site based upon the startup administrative manual.

Level 3

Level 3 criteria are associated with specifications of the expected or desired performance of individual components or inner control loop transient performance. Meeting Level 3 criteria helps assure that overall system and plant response requirements are satisfied. Therefore, Level 3 criteria are to be viewed as highly desirable rather than required to be satisfied. Good engineering judgment is necessary in the application of these rules.

Because overall system performance is a mathematical function of its individual components, one component whose performance is slightly less than specified can be accepted provided that a

system adjustment elsewhere will positively overcome this small deficiency. Large deviations from Level 3 performance requirements are not allowable.

If a Level 3 criterion requirement is not satisfied, the subject component or inner loop shall be analyzed closely. However, if all Level 1 and Level 2 criteria are satisfied, then it is not required to repeat the transient test to satisfy the Level 3 performance requirements. The occurrence of this Level 3 criterion failure shall be documented in the test report.

DCD Revised Impact

Revised Response to RAI 3.9-144 A (a) through (d):

DCD Tier #2 rev. ~~2~~4, Subsection 3L.4.6 ~~was~~ will be revised as noted in the attached markup of DCD Tier #2 rev. 5~~3~~.

Revised Response to RAI 3.9-144 A (e):

No DCD changes were made in response to this RAI.

Revised Response to RAI 3.9-144 B (a):

DCD Tier #2 rev. 2, Subsection 3.9.2.3 and ~~Appendix~~ 3L.5.5.2 were revised in DCD Tier #2 rev. 3 and Subsection 3L.5.5.2 will be further revised and Subsection 3L.5.5.3 added as shown in DCD Tier#2 rev. 5 markup.

Revised Response to RAI 3.9-144 B (b) through (h):

No DCD changes were made in response to this RAI.

NRC RAI 3.9-144 S01

Limited instrumentation on main steam lines and other systems.

1) In reference to RAI 3.9-144A(e), the limited instrumentation locations do not appear sufficient to identify potential adverse flow effects on the main steam , feedwater, condensate, and isolation condenser systems, and its components such as main steam isolation valve and safety relief valve during plant startup and power ascension. Discuss your plans to provide sufficient instrumentation and locations to demonstrate that potential adverse flow effects, such as the effects resulting from acoustic resonance, are not causing the qualification limits for the steam, feedwater, and condensate lines, and their components, to be exceeded during operation of the ESBWR.

2) Revise the ESBWR DCD Tier 2, Appendix 3L, to include sufficient information as provided in letter dated June 11, 2007, (MFN 07-325) in response to RAI 3.9-144B(b-h) to support design certification.

GEH Response

1.) RAI 3.9-144A(e)

The responses to RAI 3.9-70 provided outline of instrumentations to measure the Flow Induced Vibration (FIV) for main steam and feedwater piping systems. The instrumentations for ICS are defined below. The Discussions of the instrumentation and locations to demonstrate that potential adverse flow effects, such as the effects resulting from acoustic resonance, are not causing the qualification limits for the steam, feedwater, and condensate lines, and their components, to be exceeded during operation of the ESBWR are provide below. The additional instrumentations to measure the acoustic effect to the dryer are addressed separately in other RAI responses. Table 1 shows the instrumentation to measure the effects resulting from acoustic resonances.

A(e)1 Main Steam System

All 4 main steam (MS) lines, line are instrumented to measure the potential adverse flow effects. For each main steam line, there are 3 LVDT (Linear Potentiometer Displacement Transducer) on main steam piping to measure the vibration displacement time histories. The acceleration spectra can be calculated from the vibration displacement time histories. The measured data can be used to correlate with piping analysis results to compute the piping vibration stresses to meet the ASME vibration criteria. The gages are also used to measure the thermal displacements of the piping.

A(e)2 Feedwater Piping System

For the feedwater piping inside the containment, there are 12 LVDT and 8 strain gages to measure the vibration due to the potential adverse flow effects.

A(e)3 Condensate, and isolation condenser systems

For the Condensate, and isolation condenser systems, there are 18 LVDTs and 18 accelerometers to measure the vibration due to the potential adverse flow effects.

A(e)4 Main Steam isolation valve and safety relief valve

There are 24 accelerometers on the SRV operators and 12 accelerometers on the MSIV operators to measure the potential adverse flow effects.

Table 1 below, will be incorporated into startup instrumentation document.

Table 1 Instrumentation to measure the effects resulting from acoustic resonances

Pipe lines	Gage type	Location	Number of gages	Remark
All 4 Main steam (MS) lines instrumented	LVDT (X Y Z)	MS pipe, near SRV	3 x 4	Test specification specify exact locations
2 SRV for each MS	Accelerometers (X Y Z)	2 SRV for each MS line	6 x 4	Test specification specify exact locations
All 4 inboard MSIV	Accelerometers (X Y Z)	MSIV operator	3 x 4	Test specification specify exact locations
One SRV for each MS	Strain gages (SG)	SRV branch (2 single gage, 90 degrees apart)	2 x 4	Test specification specify exact locations
Feedwater, Loop A and B	LVDT (X Y Z)	FW pipe (2 locations)	6 x 2	Test specification specify exact locations
Feedwater, Loop A and B	Strain gages (SG)	FW pipe (2 single gage, 90 degrees apart)	4 x 2	Test specification specify exact locations
Isolation Condenser (Condensate line, 4 systems)	LVDT (X Y Z)	Location selected after stress analysis	3 x 4	Test specification specify exact locations
Isolation Condenser (Condensate lines, 4 systems)	Accelerometers (X Y Z)	Location selected after stress analysis	3 x 4	Test specification specify exact locations
Isolation Condenser (2 Steam lines)	LVDT (X Y Z)	Location selected after stress analysis	3 x 2	Test specification specify exact locations
Isolation Condenser (2 Steam lines)	Accelerometers (X Y Z)	Location selected after stress analysis	3 x 2	Test specification specify exact locations

Note 1 : The above instrumentations are the minimum requirements to insure the flow induced vibration the piping systems are within the ASME allowable limits. Detail gage setup and number of gages may be increased during the actual design process. The gages for all other systems will be instrumented after the stress analysis are completed and to determine the best instrument locations.

Note 2 : The instrumentations do not include the strain gage setup for dryer acoustic pressure measurements.

Note 3 For main steam and feedwater pipe outside the containment, hand held vibration or pipe-mounted instrumentation can be used to measure the piping and valve operators vibration during walk down and all startup hold points.

Note 4 The valve operability qualification tests are not in the scope of this table.

2.) RAI 3.9-141B(b-h)

(b) DCD Tier #2 Sections 3L.5 will be revised to agree with the Initial Test Program from DCD Tier #2 Chapter 14 and previous BWR startup experiences by linking to Subsection 14.2.

(c)(d)(e)(f)(g) The initial response was based on information on the Initial Test Program from Chapter 14 and normal startup group process information from BWR experience. The response did not provide any new/beneficial "...sufficient information..." on the ESBWR, Initial Test Program or Reactor Internals FIV Program "...to support design certification...". Therefore, no changes are recommended to address the incorporation of this RAI item response.

(h) Information for the initial response was drawn from DCD Tier #2 Chapter 14, Subsection 14.2.2 and will be incorporated with Part B Item b above in Section 3L.5. The Level 1, Level 2 and Level 3 discussion in the Part B Item h initial response did not provide any new/beneficial "...sufficient information..." on the ESBWR, Initial Test Program or Reactor Internals FIV Program "...to support design certification...". Therefore, no detailed discussion of these acceptance criteria is recommended for incorporation of this RAI item response.

DCD Impact

DCD Tier #2 rev. 4, Section 3L.5 and Subsection 3L.5.3 will be revised as noted in the attached markup of DCD Tier #2 rev. 5.

NRC RAI 3.9-151 S01

RAI 3.9-151 S01 Comment on response to RAI 3.9-151 (MFN 06-464):

In its response to the NRC RAI 3.9-151, dated November 22, 2006, the applicant states:

The program that GE intends to complete pertaining to FIV of reactor internal components is explained in Licensing Topical Report NEDE-33259P. This plan includes the completion of analysis for the remaining reactor internal components, and the details of the measurement and inspection program to be implemented at the startup of the first ESBWR plant. GE's plan is to complete this work in 2007 prior to submittal of the first COL submittal. Regarding the steam dryer FIV program, GE is planning to implement design features that will reduce the FIV susceptibility of the steam dryer, and commitments related to testing at subsequent ESBWR plants is not appropriate until all the evaluation work is complete.

The applicant's response to the first part of the RAI 3.9-151[RAI 3.9-151(a)] regarding the program pertaining to FIV of reactor internal components is addressed in LTR NEDE-33259P and the applicant plans to complete the program before the submittal of the first COL application. This information should be included in the DCD, Tier 2, Section 3.9.5, so that the COL applicant would be aware of it. The applicant is requested to revise the DCD to incorporate this information.

The applicant's response to the second part of RAI 3.9-151[RAI 3.9-151(b)] regarding steam dryer instrumentation is incomplete. The applicant does commit to instrument the steam dryer bank hoods, end plates, skirt, drain channels, and support ring in its response to RAI 3.9-73. The applicant is requested to incorporate this information in DCD, Tier 2, Section 3.9.5. In addition, the applicant is requested to include commitments related to testing of steam dryer at second and subsequent ESBWR plants in DCD.

GEH Response

For the reactor internals FIV program, Subsection 3.9.9.1 of the DCD is revised to make the COL applicant aware of the complete reactor internal components vibration program detailed in LTR NEDE-33259P. Section 3.9.9.1 is deemed more appropriate than Section 3.9.5 for providing this information to the COL applicant.

For details of the steam dryer vibration program, Subsection 3.9.2.4 of the DCD is revised to refer the reader to Section 3L.4.6 where a comprehensive steam dryer vibration program is described. Subsection 3.9.2.4 is deemed more appropriate than Section 3.9.5 for highlighting the details of the steam dryer vibration program.

The lead ESBWR steam dryer and steam lines will be instrumented. The second and subsequent ESBWR plants will have their steam lines instrumented to 1) monitor acoustic resonances, 2) confirm that the steam line pressure load signature for the follow-on plant is close enough to the lead plant so as to demonstrate that the lead plant steam dryer measurements and analysis are applicable to the follow-on plant, and 3) if necessary, develop a load definition for performing a structural analysis of the steam dryer for the follow-on plant.

ESBWR plants placed in service after the first prototype plant that has a full complement of both on-dryer and MSL instrumentation, it is expected that a limited subset of the prototype ESBWR instrumentation (either pressure sensors on the steam dryer and/or MSL instrumentation) will be needed to validate the load definition used for the subsequent ESBWR (non-prototype) plants. If instrumentation is used in the subsequent ESBWR plants, GEH expects that pressure sensors will be used to correlate the steam dryer measured loading with the acoustic finite element model in order to confirm the subsequent ESBWR dryer FIV loading as described in Tier 2 Subsection 3L.4.6. If main steam line instrumentation is used, measurement locations on each steam line will be used the confirm the measured plant data with the prediction of the FIV loading used in the steam dryer stress evaluation. This instrumentation for subsequent ESBWR units will remain in effect as a licensing commitment until sufficient ESBWR operating experience is gained to show that FIV loading on the ESBWR subsequent units is not a concern for structural integrity of the ESBWR dryer.

In addition to steam line testing and potential steam dryer analysis, Subsection 3L.4.6 commits to steam dryer inspections in accordance with reference 3L-2, General Electric Company, "BWR Steam Dryer Integrity", SIL 644 Revision 2, August 30, 2006, and in accordance with Boiling Water Reactor Vessel Internals Program (BWRVIP) guidance.

DCD Impact

DCD Tier #2 rev. 2, Subsections 3.9.2.4, 3.9.9-1-H and 3.9.10 were revised in DCD Tier#2 rev. 4.

MFN 08-322

Enclosure 3

DCD Markup for Appendix 3L, "Reactor Internals Flow Induced Vibration Program"

Verified DCD changes associated with this RAI response are identified in the enclosed DCD markups by enclosing the text within a black box. The marked-up pages may contain unverified changes in addition to the verified changes resulting from this RAI response. Other changes shown in the markup(s) may not be fully developed and approved for inclusion in DCD Revision 5."

3L. REACTOR INTERNALS FLOW INDUCED VIBRATION PROGRAM

3L.1 INTRODUCTION

A flow-induced vibration (FIV) analysis and testing program of the reactor internal components of the ESBWR prototype plant demonstrates that the ESBWR internals design can safely withstand expected FIV forces for reactor operating conditions up to and including 100% power and core flow. This program includes an initial evaluation phase that has the objective of demonstrating that the reactor internals are not subject to FIV issues that can lead to failures due to material fatigue~~, or fretting and wear issues~~. Throughout this part of the program, the emphasis is placed on demonstrating that the reactor components will safely operate for the design life of the plant. The results of this evaluation are shown in Reference 3L-1. The second phase of the program is focused on preparing and performing the startup test program that demonstrates through instrumentation and inspection that no FIV problems exist. This part of the program meets the requirements of Regulatory Guide 1.20 with the exception of those requirements related to preoperational testing that are not applicable to a natural circulation plant.

3L.2 REACTOR INTERNAL COMPONENTS FIV EVALUATION

The ESBWR reactor internals are part of an evolutionary Boiling Water Reactor (BWR) design, but fundamentally the components and ~~operation~~ function of the reactor vessel and internals are very similar to past BWRs. To a large extent, the ESBWR design of the components relies heavily on the prior design of internals in operating plants to assure that new vibration issues are not introduced. Also, to assure that the flow of steam or water in the reactor vessel is comparable to prior reactors, efforts were made to maintain traditional spacing and dimensional relationships of components. A unique feature of the ESBWR, with respect to FIV, is the fact that ~~it~~ ESBWR is a natural circulation plant where no recirculation ~~motors~~ pumps exist that would create pressure pulses from the pump vanes that would travel into the reactor vessel. ~~In previous BWR product lines, the pump vane passing frequency, that is variable with flow, typically has a maximum frequency of 120 Hz at full reactor flow. This~~The recirculation pump's ~~source of~~ excitation has caused failures in ~~small~~ components inside previous BWR reactor vessels. For the ESBWR this source of flow excitation does not exist. The design of the ESBWR reactor internals is shown in Figure 5.3-3.

3L.2.1 Evaluation Process – Part 1

The first step in the evaluation process was to establish selection criteria for reactor internal components related to susceptibility to vibration. All reactor internal components were considered as potential candidates for further evaluation. Each component is evaluated against the following selection criteria:

- Is the component safety-related?
- Is the component of a significantly different or new design compared to earlier BWRs?
- Does the component have a history of FIV-related problems?
- Is the component subjected to significantly different or new flow conditions?

Based on these criteria, the following internal component structures are considered to be candidates for additional evaluation and potential to be instrumented in the startup FIV test program:

- Steam Dryer Bank Hoods and End Plates based on history of past FIV related problems (e.g., fatigue cracking between hood and endplate).
- Steam Dryer Skirt based on history of past FIV-related problems (e.g., fatigue cracking between skirt and drain channels).
- Steam Dryer Drain Channels based on history of FIV-related problems (e.g., fatigue cracking between skirt and drain channels).
- Steam Dryer Support Ring based on history of FIV-related problems (e.g., steam dryer rocking). ~~and the resulting new design features for replacement dryer designs (e.g., strengthened weld joints, castings).~~
- Chimney ~~Partition~~ Assembly based on new design features (i.e., elongated chimney shell, partition assembly, chimney restraint), potential new flow conditions~~, difficulty of repair in event of failure,~~ and limited ability to change the design due to dimensional and performance constraints.

- Chimney Head/Steam Separator assembly based on new design (i.e., shallow dished head or flat head with beam reinforcement, ~~and~~ elongated standpipes and thinner stack materials).
- Shroud/Chimney assembly based on new design features (~~discrete shroud support members and the chimney connection~~see Figure 3.9-8), and potential new flow conditions. ~~and difficulty of repair in event of failure.~~
- Standby Liquid Control (SLC) internal piping based on new design routed through the shroud and is safety-related.

Components that were evaluated ~~but were not considered important for~~and concluded to require no further evaluation ~~were the following components~~:

- Control Rod Drive Housing (CRDHs)
- Control Rod Guide Tubes (CRGTs)
- In-Core Monitor Guide Tubes (ICMGTs)
- In-Core Monitor Housings (ICMHs)

For each of these components, the length of the components have decreased from prior BWR product lines due to the plant having shorter fuel. This increases the natural frequencies for these components and moves the natural frequencies~~them well~~ beyond the ~~predominated~~ predominant frequencies measured at the prototype ABWR plant. Also, the flow velocities in the RPV bottom head region have decreased and the calculated vortex shedding frequencies are well below the natural frequencies of the components in this region. RAI 3.9-133 S01

Other components such as the top guide and core plate that are not specifically identified as candidates for the instrumentation program are basically proven by ~~past~~ trouble-free BWR experience, and have designs and flow conditions that are similar to prior operating BWR plants. Because most of the reactor internal components are large durable components where there has been no history of FIV issues, no FIV issues are anticipated. Also, because it is still early in the program, there is still the opportunity to make adjustments as necessary in the component designs to make them more resistant to FIV.

The results of the Part 1 evaluation are contained in Reference 3L-1.

From the components listed above, the first priority was determined to be the chimney ~~partition~~ assembly. This selection was made since it was a new component where only limited operating experience was available. Also, ~~it~~ the chimney assembly is a structure where the geometry of the partitions places limitations on the plate thicknesses, has a long extended length, and is subject to high velocity two-phase steam flow. From this initial selection, a test and analysis program was established and the results are discussed in Subsection 3L.3.3. For this case, testing was required since no prior relevant test data was available for this component.

The steam dryer was established as the second priority. An initial analysis program was started to study the acoustic and flow effects of the ESBWR configuration in comparison to the ABWR steam dryer design. It was determined that the increase in the size of the steam dryer support ring and skirt design and the increase in steam velocity did not have any adverse effects on the steam dryer structural integrity. At the time of the initial assessment, it was also recognized that the evaluation of BWR operating plant steam dryer loads was an ongoing program that would

need to be ultimately factored into the ESBWR steam dryer design and evaluation effort. The progress of the ~~generic~~ replacement steam dryer program is now at a stage that a meaningful effort can now be planned for the ESBWR steam dryer. The detailed program that is planned is described in Section 3L.4. As a result of the advances in the understanding of steam dryer vibration, differential pressure loads and steam dryer design improvements (see Subsection 3L.2.3), the ESBWR uses a steam dryer design patterned after the ~~new~~ABWR and replacement steam dryer ~~design~~ designs developed for BWR ~~operating~~ plants.

3L.2.2 Evaluation Process – Part 2

The next phase of the evaluation program ~~will be to perform~~performed additional work to demonstrate the adequacy of the ~~remaining~~ components where ~~it was~~Part 1 determined ~~that~~ additional evaluations were required. The objective of this phase ~~will be to complete~~completes a more quantitative evaluation and ~~to document~~documents the existing facts regarding the individual components. This part of the evaluation ~~will focus~~focuses on the following:

(1) Similarities and differences of the ESBWR component design configurations as compared to prior designs. In most cases the comparison design ~~will be with~~is ABWR components.

(2) A review of prior calculations for the components being evaluated, to establish the mode shapes and natural frequencies. ~~Estimates~~Calculations of the ESBWR component natural frequencies ~~will then be~~is determined based on this data.

(3) Prior plant startup instrumentation data from the prototype ABWR plant ~~will be~~is reviewed to establish the magnitude and frequency of the measured vibration data, and to review the resulting calculated stress for the components that were instrumented.

(4) A comparison of the flow paths and characteristics of the ESBWR design ~~will be~~is compared to prior BWR designs where a startup vibration test program was conducted.

(5) Using the results of the above items, an assessment as to the likelihood of FIV issues ~~will be~~is completed and documented in ~~a revision to~~ Reference 3L-1. There are two potential outcomes for the components evaluated using this process. The first potential outcome is that the evaluation conclusively demonstrate that FIV will not be an issue for that component and that plant safety-related functions are ~~will~~ not ~~be~~ adversely affected. In this case, no further evaluation is necessary. The other potential outcome is that the evaluation performed using Steps 1 through 4 is not sufficient to disposition potential FIV issues for the component. In this case, additional evaluations or instrumentation is necessary. For the components requiring further evaluation or instrumentation, no FIV issues are anticipated, ~~and~~ the objective is to provide additional supporting information that clearly demonstrates that FIV is not an issue.

RAI 3.9-133 S01

The results of these evaluations are documented in Reference 3L-1.

During ~~this~~the evaluation phase, the process as identified in Subsection 3.9.2.3 will be followed to prepare finite element analysis models per the details shown in Subsection 3L.5.5.1~~, establish correlation functions based on prior instrumentation data, and apply the correlation functions to the model to determine expected stress amplitude~~. This information will then be used as the basis for the instrumentation in the ESBWR startup test program. It should be noted that the steam dryer and chimney have already been identified in Section 3L.2.1 for inclusion in the

RAI 3.9-133 S01

startup test program. ~~The results of these evaluations will be documented in a revision to Reference 3L-1.~~

~~Because most of the reactor internal components are large durable components where there has been no history of FIV issues, no FIV issues are anticipated. Also, because it is still early in the program, there is still the opportunity to make adjustments as necessary in the component designs to make them more resistant to FIV.~~

3L.2.3 Design and Materials Evaluation

FIV-related fatigue cracking and Intergranular stress corrosion cracking (IGSCC) are major causes of reactor internal component degradation observed in operating BWRs. The ESBWR reactor internals will be designed to resist fatigue loading. Design evaluations will be conducted to evaluate load paths and streamline structural discontinuities thus reducing stress risers that contribute to fatigue failure. Welds are reduced by integrating components through machining or castings. Some components are specifically designed for intersections between larger components so groove welds can be used in lieu of fillet welds. Design evaluations are also conducted to stiffen the component structure moving component fundamental frequencies above the frequency range associated with hydrodynamic and acoustic loads.

The reactor internal materials, as specified in Subsection 4.5.2, are resistant to corrosion and stress corrosion cracking in the BWR steam/water environment.

3L.3 CHIMNEY ~~PARTITION~~ ASSEMBLY EVALUATION

3L.3.1 Design and Materials

The chimney ~~partition~~ assembly design consists of a chimney shell and partition assembly. The chimney shell has a bottom ring ~~of the partition assembly~~ that rests on and is bolted ~~and pinned~~ to the top guide, see Figure 3.9-8. The chimney partitions rest on the bottom flange of the chimney shell. The top ~~ring~~ of the partition assembly is supported against the inside of the chimney shell. The ~~partitions~~partition assembly is ~~are~~ a grid of square structures, each of which encompasses and lines up with 4 top guide fuel cells (i.e.,16 fuel assemblies). The chimney shell and partitions are fabricated using austenitic stainless steel plate, see Table 4.5-1. The partitions ~~that is~~are full length welded ~~at~~ near the junctions of the partitions. ~~The austenitic stainless steel material has a 0.02% maximum carbon content to resist Intergranular Stress Corrosion Cracking (IGSCC).~~ The chimney ~~structure~~ shell that houses the partition structure is cylindrical, similar to the core shroud. A sketch of the chimney ~~and partition~~ assembly is shown in Figure 3L-1. Because the chimney shell has structural characteristics similar to the shroud, this component is considered under the generic reactor internals vibration program, and the partition assembly is considered to be the unique component that requires special vibration consideration.

3L.3.2 Prior Operating Experience

Prior to the ESBWR design, only one other BWR plant had operating experience with this chimney design. This was the BWR-1 Dodewaard plant, which did not have a vibration instrumentation program. For this plant, the partition size was a square configuration that encompassed four fuel assemblies within the cell, which is ¼ the dimension of the ESBWR partitions. Also, the height was approximately ½ the length of the ESBWR design. The partition thickness was 3 mm (0.12~~5~~ in) as compared to 9 mm (0.35 in) for ESBWR, and the partitions were welded together using intermittent fillet welds as compared to full-length buttwelds moved away from the partition intersections for ESBWR. Although the partitions were not instrumented, the plant operated for almost 30 years without any issues related to the chimney structure. Since the design of the ESBWR chimney partitions is more ~~robust~~fatigue-resistant, this Dodewaard operational history provides additional assurance that the ESBWR will not have FIV issues.

3L.3.3 Testing and Two-phase Flow Analysis

For the ESBWR, the chimney ~~lattice~~ partition assembly constitutes a structure that ~~needs to have~~has a unique vibration evaluation program as part of the ESBWR reactor internals. In order to assess its capability to maintain structural integrity under plant operating conditions, a flow induced vibration evaluation ~~has been~~is performed in which the fluctuating fluid force acting on the partition plates ~~has been~~is evaluated by a combination of scale tests and two-phase flow analysis.

The test scope comprised ~~both~~a 1/6-scale (100 mm × 100 mm), ~~and~~a 1/12-scale (50 mm × 50 mm) and one almost full scale (500 mm × 500 mm). Tests use a mixture of air and water to simulate two-phase flow testing inside the ~~of a single~~ chimney ~~cell~~. The ~~superficial~~ velocities of the gas and liquid components of the two-phase flow were adjusted to be consistent with ESBWR values to simulate the actual two-phase flow pattern. Different inlet flow conditions in

the smaller scale models were used to investigate the influence of inlet mixing within the partition to simulate different power conditions. Pressure fluctuation was measured on the inner surface of the partition wall with pressure transducers. The 1/6-scale model was later divided into 4 cells for investigating the pressure fluctuations between cells (Reference 3L-1).

The ~~results of the~~ scale model tests ~~testing~~ were used to investigate the effect of model size on the magnitude ~~extrapolated by a two-phase flow analysis to determine the characteristics~~ of ~~the~~ pressure fluctuations acting on the partition wall ~~of a full-size cell~~ in steam-water conditions. ~~This extrapolation included the use of a 1/12 and full scale analytical model. The resulting peak-to-peak pressure fluctuation was determined to be 15 kPa at a peak frequency of approximately 2 Hz.~~

A structural analysis of the chimney and partition design was then conducted using finite element methods. First, an eigenvalue analysis determined that the lowest natural frequency of the chimney structure is approximately ~~56~~ 54 Hz. This was sufficiently greater than the predominant frequency of pressure fluctuation determined by testing (2 Hz) that a static analysis of the structure was concluded to be proper. Based on the results of that static analysis, a maximum stress of ~~41~~ 32.8 MPa (4,760 psi), with a fatigue strength reduction factor of 2, was calculated near the edge of the partition plate joint. This stress value is bounded by the allowable vibration peak stress amplitude of 68.95 MPa (10,000 psi) specified in Subsection 3.9.2.3.

3L.4 STEAM DRYER EVALUATION PROGRAM

3L.4.1 Steam Dryer Design and Performance

The ESBWR steam dryer consists of a center support ring with dryer banks on top and a skirt below. ~~is designed using modules of dryer vanes enclosed in a housing to make up the steam dryer assembly.~~A typical steam dryer is shown in Figure 3L-2. The ~~modules or subassemblies of dryer vanes, called~~ dryer units, made up of steam drying vanes and perforated plates, are arranged in six parallel rows called dryer banks. The ESBWR steam flow rate is approximately 15% higher than ABWR. The ESBWR RPV has a larger inner diameter at the vessel flange than ABWR, which will allow dryer banks to be extended, thereby accommodating the higher steam flow. The additional dryer unit face area will result in approximately the same flow velocity through the drying vanes as ABWR and help maintain moisture removal performance requirements. The ~~dryer banks are attached to an upper~~ support ring~~, which~~ is supported by RPV ~~steam dryer~~ support brackets.~~ that are welded attachments to the reactor pressure vessel (RPV).~~ The steam dryer assembly does not physically connect to the ~~shroud~~ chimney head and steam separator assembly.~~ and does not have a direct connection with the core support or shroud.~~ ~~A~~ The cylindrical skirt attaches to the ~~upper~~ support ring and ~~will~~ projects downward to form a water seal around the array of steam separators. Normal operating water level is approximately mid-height on the steam dryer skirt.

Wet steam from the core flows upward from the steam separators into an inlet header, then horizontally through the inner perforated plate, the dryer vanes and the outlet ~~side~~ perforated plates, then vertically in the outlet header and out into the RPV dome. Dry steam then exits the RPV through the steam outlet nozzles. Moisture (liquid) is separated from the steam by the vane surface and the hooks attached to the vanes. The captured moisture flows downward, under the force of gravity, to a collection trough that carries the liquid flow to vertical drain channels. The liquid flows by gravity through the vertical drain channels to the lower end of the skirt where the flow exists below the normal water level.

The prototype for the ESBWR steam dryer ~~is~~builds on the ~~replacement~~ successful operating experience of the ABWR steam dryer. Although the ESBWR steam dryer will have a larger diameter and wider vane banks to accommodate close to 15% higher steam flow, the vane height, skirt length, outer hood setback from the MS nozzle, and water submergence will be similar to the ABWR steam dryer. The ESBWR steam dryer also draws experience from operating plant replacement steam dryer program fabrication, testing and performance. Steam dryers recently tested and installed in ~~several~~ BWR/3 and BWR/4 plants ~~that~~ had experienced high pressure loads under extended power uprate operating conditions. These loads were characterized by an abnormally high pressure tone at approximately 155 Hz that emanated from an acoustic resonance in one or more of the SRV standpipes. The replacement steam ~~dryer~~dryers ~~was~~were specifically designed to withstand the flow-induced vibration and acoustic resonance loading that led to fatigue failures in the steam dryers for these plants. In addition, the SRV standpipes and main steam line branch lines in ESBWR are specifically designed to mitigate SRV/branch line resonances that could be a significant contributor to steam dryer loading. Table 3L-1 provides a comparison between major configuration parameters of the ESBWR,~~ and~~ the ABWR prototype and a BWR/3 replacement steam dryer.

RAI 3.9-141 revised

RAI 3.9-141 revised

~~During normal refueling outages, the ESBWR steam dryer is supported from the floor of the equipment pool by the lower support ring that is located at the bottom edge of the skirt. The steam dryer is installed and removed from the RPV by the reactor building overhead crane. A steam separator and dryer lifting device, which attaches to four steam dryer lifting rod eyes, is used for lifting the dryer. Guide rods in the RPV are used to aid dryer installation and removal. Upper and lower guides on the dryer assembly are used to interface with the guide rods. The ESBWR steam dryer assembly is shown in Figure 3L-2.~~

3L.4.2 Materials and Fabrication

Current industry and replacement steam dryer practices are applied to the materials and fabrication of the ESBWR steam dryer. The steam dryer materials are selected to be resistant to corrosion and stress corrosion cracking in the BWR steam/water environment, see Table 4.5-1. ~~New industry dryers are currently constructed from wrought 300 series stainless steel and Grade CF3 stainless steel castings. Except for the dryer vane material, the maximum carbon content of the wrought stainless steel is limited to 0.02% and the maximum hardness of wrought 300 series stainless steel is limited to Rockwell B92. Fabrication process controls are applied to minimize the degradation of material properties by forming, cold working, etc. Susceptibility to stress corrosion cracking is avoided by careful control of the solution heat treatment, sensitization testing and testing for intergranular attack (IGA).~~

3L.4.3 Load Combinations

Design loads for the steam dryer are based on evaluation of the ASME load combinations provided in Table 3.9-2 except that the load definitions that pertain to the steam dryer are modified as shown in Table 3L-2. These load combinations consist of ~~dryer~~ deadweight loads, static and fluctuating differential pressure loads (including turbulent and acoustic sources), seismic, thermal, and transient acoustic and fluid impact loads.

3L.4.4 Fluid Loads on the Steam Dryer

During normal operation, the steam dryer experiences a static differential pressure loading across the steam dryer plates resulting from the pressure drop of the steam flow across the vane banks. The steam dryer also experiences fluctuating pressure loads resulting from turbulent flow across the steam dryer and acoustic sources in the vessel and main steam lines. During transient and accident events, the steam dryer ~~may~~ also experiences~~experience~~ acoustic and flow impact loads that result from system actions (e.g., turbine stop valve closure) or from the system response (e.g., the two-phase level swell following a main steamline break).

Of particular interest are the fluctuating acoustic pressure loads that act on the steam dryer during normal operation that has led to fatigue damage in previous steam dryer designs. In the low frequency range, these pressure loads have been correlated with acoustic sources driven by the steam flow in the outer hood and vessel steam nozzle region. In the high frequency range, acoustic resonances in the stagnant steamline side branches (e.g., relief valve standpipes) have coupled with the vessel, thus imparting a pressure load on the steam dryer. Vessel acoustic modes may also be excited by sources inside and outside the vessel, resulting in additional acoustic pressure loads in the middle frequency range. ~~Scale model testing has identified the likely sources of fluctuating pressure loading acting on the steam dryer. The results of this~~

~~testing showed that the fluctuating pressure load frequency spectrum can be divided into four regions based on the postulated source of the loading (these frequency ranges are approximate).~~

- ~~0-10 Hz: The pressure loads in this frequency range are dominated by the fundamental main steamline piping acoustics. The source of these pressure loads is believed to be turbulence in the main steamline or vortex shedding in steam dome.~~
- ~~**10-30 Hz:** The source of the pressure loads in this frequency range may be due to a near-steady-state vortex on the outer hood, penetrating into the Main Steam Line Nozzle. The frequency characteristics of this pressure loading may be governed by harmonics of the main steamline acoustics.~~
- ~~**>30 Hz:** The lowest steam plenum acoustic modes are located in this frequency range. The dominant excitation is due to broadband turbulent sources located in main steamlines but the acoustic modes may also be excited by sources in the vessel. The plenum acoustic modes have a very high amplification effect on pressure oscillations in this frequency range. The lower frequency vessel acoustic modes exhibit the most significant response to the turbulent excitation present in the system. Higher frequency vessel acoustics exist but are not significantly excited except as discussed below.~~

- ~~**120-200 Hz:** Strong narrow band pressure loads in this frequency range are caused by acoustic resonances in safety and relief valve branch lines attached to the main steamlines. Higher frequency steam plenum acoustic modes can be excited if the vessel is acoustically coupled to the branch line. The ESBWR SRV standpipe design is intended to reduce or eliminate acoustic resonances in these branch lines. It should be noted that the 120-200 Hz frequency range is approximate and is dependent on the SRV standpipe design. The frequency range monitored in the FIV test program will be adjusted to bound the range of frequencies determined for the final design.~~

RAI 3.9-134b revised

A detailed description of the ~~acoustic~~pressure load definition ~~process~~methodology for the ESBWR steam dryer is provided in Reference 3L-5. The ESBWR steam dryer ~~acoustic~~fluctuating load definition is based on the load definitions based on in-plant measurements that were developed for the steam dryer structural analyses in several extended power uprates. These load definitions provide a fine-mesh array of pressure time histories that are consistent with the structural finite element model nodalization. Multiple load definitions are used in the ESBWR steam dryer analysis in order to evaluate the steam dryer response over a wide frequency range. These load definitions include the limiting low and high frequency loads observed in plants with instrumented steam dryers. Based on the plant unique plant configurations (e.g., dead legs in the main steam lines that may amplify the low frequency acoustic response) and operating conditions (e.g., high steam line flow velocities) in these instrumented plants, the load definition from these plants are expected to provide a robust load definition for the ESBWR. ~~The amplitude of the in-plant load definitions are scaled up to the ESBWR operating conditions based on a ratio of the square of the main steam line flow velocities. In the vessel acoustic mode frequency range, the frequencies are also scaled to the ESBWR based on a ratio of the vessel diameters (a frequency shift of approximatey 11%).~~ The load definitions developed for the ESBWR ~~will~~is also ~~be~~ benchmarked against the instrumented steam dryer measurements taken during startup testing for the lead ABWR. The ESBWR and ABWR have the same vessel diameter and ~~steam dome dimensions,~~ vessel steam nozzle design (with flow restricting ~~venture~~venturi), and similar main steam line layouts; therefore, it is

expected that the frequency content of the ESBWR steam dryer pressure loads will be similar to those measured on the ABWR.

3L.4.5 Structural Evaluation

A finite element analysis (FEA) is performed to confirm that the ESBWR steam dryer is structurally acceptable for operation. The FEA uses the load definitions ~~based on in-plant measurements~~ described in Subsection 3L.4.4. The FEA is performed using a whole steam dryer analysis model ~~of the ESBWR steam dryer~~ to determine the most highly stressed locations, also see Subsection 3L.5.5.1.3. The FEA consists ~~of time-history~~ dynamic analyses for the load combinations identified in ~~Table 3.9-2~~Subsection 3L.4.3. If required, locations of high stress identified in the whole steam dryer analysis are further evaluated using solid finite element models to more accurately predict stresses at these locations. ~~The~~Additional analysis ~~also~~ confirms that the RPV steam dryer support lugs accommodate the predicted ~~dryer~~ loads under normal operation and transient and accident conditions. (Also see Subsection 3L.5.5.1.3.)

The structural evaluation of the ESBWR steam dryer design is presented in (Reference 3L-6).

3L.4.6 Instrumentation and Startup Testing

The ESBWR steam dryer is instrumented with temporary vibration sensors to obtain flow induced vibration data during power operation. The primary function of this vibration measurement program is to confirm FIV load definition used in the structural evaluation is conservative with respect to the actual ~~pressure~~ loading measured on the steam dryer during power operation, ~~is consistent with the pressure loading assumed in the structural fatigue evaluation~~ and to verify that the ~~new~~ steam dryer can adequately withstand stresses from flow induced vibration forces for ~~extended period as designed~~the design life of the steam dryer. The detailed objectives are as follows:

- Determine the ~~dryer~~ as-built modal parameters: This is achieved by impact (hammer) testing the steam dryer components. The results yield natural frequencies, mode shapes and damping of the ~~dryer~~ components for the as-built steam dryer. These results are used to verify portions of the steam dryer analytical model. ~~of the dryer.~~
- Confirm ~~the pressure~~FIV loading: In order to confirm ~~the pressure~~ loading ~~on the dryer~~ due to turbulence, acoustics and other sources, dynamic pressure sensors are installed on the steam dryer. These measurements will provide the actual pressure loading on the steam dryer under various operating conditions.
- Verify the ~~new dryer~~ design: Based on past knowledge gained from different steam dryers, as well as information gleaned from analysis ~~of the new dryer design~~, selected areas ~~of the dryer~~ are instrumented with strain gages and accelerometers to measure vibratory stresses and displacements ~~on the dryer~~ during power operation. The measured strain values are compared with the allowable values (acceptance criteria) obtained from the analytical model to confirm that the steam dryer alternating stresses are within allowable limits.

The objective of the steam dryer hammer test is to identify the as-built frequencies and mode shapes of several key components of the steam dryer at ambient conditions. Different components of the steam dryer have different frequencies and mode shapes associated with them.

The areas of interest are the drain channel, the outer hood panel, the inner hood panel, the side panel, ~~tie bars~~divider plates and the skirt. These results are used to verify portions of the finite element model of the steam dryer. RAI 3.9-137b revised

The concern is that local natural frequencies may coincide with existing forcing functions to cause resonance conditions. The resonance could cause high stresses to occur in localized areas of the steam dryer. A finite element modal analysis can calculate the frequency and mode shape of a component, but they are only ideal approximations to the real values due to variations such as plate thickness, ~~welding~~weld geometries, configuration tolerances and residual stresses that affect the assumed boundary conditions in the finite element model. The mode shapes and frequencies determined by the hammer test are used to validate the finite element modal analysis and determine the uncertainty in the finite element model predictions of the modal response. RAI 3.9-137b revised

The impact hammer test is performed ~~inside~~at the plant ~~with~~following final assembly of the steam dryer. ~~inside the dryer/separator pool.~~ The tests are performed with the steam dryer resting on simulated ~~dryer~~ support blocks similar to the way the steam dryer is seated inside the reactor vessel. ~~The hammer test is performed when the installation of the sensors for in-reactor vibration measurement is completed.~~ RAI 3.9-137b revised

Two types of impact tests are performed on the steam dryer: a (1) Dry hammer test, and a (2) Wet hammer test with the steam dryer skirt and drain channels partially submerged in different water levels (to approximate in-reactor water level). Both tests are conducted in ambient conditions. Temporary bondable accelerometers are installed at predetermined locations for these tests. An instrumented hammer is used to excite the steam dryer at several pre-determined locations and the hammer impulse force and the structural responses from the accelerometers are recorded on a computer. The data is then used to compute experimental mode shape, frequency and damping of the instrumented steam dryer components using appropriate software. The temporary sensors are then removed and the steam dryer is cleaned prior to installation in to the reactor vessel.

The steam dryer vibration sensors consist of strain gauges, accelerometers and dynamic pressure sensors, appropriate for the application and environment. A typical list of vibration sensors with their model numbers is provided in Table 3L-3. The selection and total number of sensors is based on past experience of similar tests conducted on other BWR steam dryers. These sensors are specifically designed to withstand the reactor environment. ~~Details of the steam dryer instrumentation are provided in Reference 3L-7.~~The pressure instrument locations are selected to provide a good measure of the acoustic loading through the frequency range of interest. A proper distribution of the steam dryer pressure instruments facilitates accurate assessments of FIV loads. The layout of the steam dryer pressure instrument locations are evaluated using the RPV acoustic FEA Model. The distribution of steam line instruments are determined using the Plant Based Load Evaluation model (Reference 3L-8) to provide an adequate measure of the acoustic loading through the frequency range of interest. The instrument layout permits steam dryer load development with steam dryer data alone, steam line data alone, or a combination using both sets of data. RAI 3.9-62, -63, -144A revision

The steam dryer startup test and monitoring power ascension limits are developed on a similar basis as the monitoring limits used for recent extended power uprate replacement steam dryers. The power ascension limits are based on the final FIV analysis performed for the as-built steam dryer. The strain gage and accelerometer instruments are mounted in locations that provide

measurements that are strongly coupled with projected high stress locations. Additional strain gauges and accelerometers are used as needed to provide an overall validation of the structural finite element model. Specific information utilized to verify the FIV load definition during startup testing will be described further in a revision to Reference 3L-5.

RAI 3.9-62, -63, -144A revision

Each of the sensors are pressure tested in an autoclave prior to assembly and installation on the steam dryer. An uncertainty analysis is performed to calculate the expected uncertainty in the measurements.

Prior to initial plant start-up, strain gauges are resistance spot-welded directly to the steam dryer surface. Accelerometers are tack welded to pads that are permanently welded to the steam dryer surface. Surface mounted pressure sensors are welded underneath a specially designed dome cover plate to minimize flow disturbances that may affect the measurement. The dome cover plate with the pressure transducer are welded to an annular pad that is welded permanently to the steam dryer surface. The sensor conduits are routed along a mast on the top of the steam dryer and fed through the RPV instrument nozzle flange to bring the sensor leads out of the pressure boundary. Sensor leads are routed through the drywell to the data acquisition area outside the primary containment.

Pressure transducers and accelerometers are typically piezoelectric devices, requiring remote charge converters that are located in junction boxes inside the drywell. The data acquisition system consists of strain gauges, pressure transducers and accelerometer signal conditioning electronics, a multi-channel data analyzer and a data recorder. The vibration data from all sensors is recorded on magnetic or optical media for post processing and data archival. The strain gauges, accelerometer and pressure transducers are field calibrated prior to data collection and analysis. The temporary vibration sensors are removed after the first outage.

In addition to the instrumentation on the steam dryer, the main steamlines are instrumented in order to measure the acoustic pressures in the main steam lines. ~~These~~ The main steam line pressure measurements with the steam dryer pressure measurements are used as input to an acoustic model for determining the pressures acting on the steam dryer~~. This acoustic model is calibrated against the pressure transducer measurements taken on the steam dryer~~ in order to provide ~~an acoustic~~ a pressure load definition for use in performing confirmatory structural evaluations. ~~For non-prototype ESBWRs, the steamlines are instrumented and the calibrated acoustic model is used to confirm the pressure loads acting on the steam dryer. Details of the main steamline measurement instrumentation and acoustic model are provided in Reference 3L-7.~~

RAI 3.9-63 revision

During power ascension, the steam dryer instrumentation (strain gages, accelerometers and dynamic pressure transducers) is monitored against established limits to assure the structural integrity of the steam dryer is maintained. If resonant frequencies are identified and increase above the predetermined criteria, power ascension is stopped. The acceptability of the steam dryer for continued operation is evaluated by revising the load definition based on the measured loading, repeating the structural analysis using the revised load definition, and determining revised operating limits based on the results of the structural analysis.

Specific steam dryer inspection recommendations for the ESBWR steam dryer design are developed based on the final as-built design and structural analysis results. ~~Future~~The steam dryer inspection~~inspections will be in accordance~~ recommendations are consistent with

Reference 3L-2, and ~~in accordance~~consistent with Boiling Water Reactor Vessel Internals Program (BWRVIP) guidance issued by the BWR owners group specific to reactor internals vibration.

3L.5 STARTUP TEST PROGRAM

This section summarizes the program for preparing and performing the startup FIV testing including the methods and analysis that are performed when the startup test data is available. This section assumes that the initial selection of components identified in Subsection 3L.2.1 will be part of the analysis and instrumentation associated with the startup testing program.

Testing requirements of this program are incorporated into the Initial Test Program detailed in Section 14.2 through the Reactor Internals Vibration Test described in Subsection 14.2.8.2.11. The test procedure acceptance criteria, derived from the evaluations described in the appendix, are classified by definitions in the Startup Administrative Manual outlined in Subsection 14.2.2. Direction on the quality process to be used to control the resolution of test acceptance criteria failures is incorporated in the Startup Administrative Manual and specific guidance may be included in the test procedure.

RAI 3.9-144B S01

3L.5.1 Component Selections

The components that are selected for instrumentation are determined from the initial evaluation phase as discussed in Subsection 3L.2.1. Many different sensors of four different types are utilized to measure vibration related data on several different reactor internal component structures.

3L.5.2 Sensor Locations

Having determined the components to instrument during the test, sensor locations on those structures are determined based upon the analytically predicted mode shapes for each structure, or calculated maximum stress locations, or, sensor locations based on CFD modeling, and in some cases, based upon the location of past FIV-related failures. Strain gages and~~,~~ accelerometers~~ and linear variable differential transformer (LVDT) type relative displacement sensors~~ are used for monitoring vibration levels. Strain gages measure local strain from which local stress can be calculated. Based on knowledge of the natural mode shapes of the structure or calculated stress distribution, peak stresses at other locations on the structure are determined from these data. Accelerometers (with double integration of the output signal)~~ and LVDTs~~ provide measurements of local structural displacement. This information, together with knowledge of the natural mode shapes of the structure or calculated stress distribution, allows the peak stresses to be calculated at other locations. Pressure sensors are also utilized at various locations in the vessel. These are not used to measure structural vibration directly, but rather to measure the pressure variation that is often a forcing function that causes the structural vibration. These pressure sensor data are very useful for determining the source of any excessive vibration amplitudes, if they are to occur during testing. ~~Typical sensor~~Sensor types and ~~potential~~ locations are listed in Table 3L-4.

3L.5.3 Test Conditions

Test conditions are selected early in the FIV test program to consider a variety of steady-state and transient operating conditions that could be expected to occur during the life of the plant. Tests are identified in the Initial Test Program schedule during heatup and power operation testing phases, when at steady-state conditions and with transient test sequences, as necessary. Specific conditions for testing are integrated into the initial startup by inclusion in the Initial Test

RAI 3.9-144B S01

Program schedule outlined in Subsection 14.2.7. Hold points and milestones are included to allow for test result review and approval, overall phase testing approval and authorization to proceed with the next testing phase documented in the Startup Administrative Manual, which includes time for COL Holder and NRC staff interactions.

RAI 3.9-144B S01

Reactor pressure vessel (RPV) internals vibration at steady-state conditions is more important than transient conditions for evaluating the structural integrity of components. This is because steady-state normal operating conditions can exist for long periods of time, allowing a very large number of vibration cycles to accumulate. Flow-induced vibration caused by transient operating conditions is far less influential because of the relatively low number of vibration cycles that occur over the lifetime of the plant. The purpose in including transient test conditions is to confirm that extremely high stresses do not occur during transients. This check is accomplished during the actual startup transient tests by the vibration engineers monitoring the test equipment. Transient stress levels near the allowable limit would be easily and immediately detected by the vibration engineers. No such high stress levels are expected to occur during the ESBWR prototype plant FIV transient tests. Therefore, for the purposes of confirming the structural capability of the internals, steady-state test conditions are the most important conditions to evaluate.

Total volumetric core flow rate is also an important parameter that affects the vibration magnitude of the internals. Vibration amplitude generally increases as the volumetric flow rate increases.

3L.5.4 Data Reduction Methods

Basically, two types of data reduction are performed: (1) time history analyses and (2) spectrum analyses. In either data reduction method, the measured peak-to-peak (p-p) value of each sensor signal is compared to the allowable p-p value. Even though ~~both~~ time history and/or spectrum analyses are performed for each selected sensor and test condition, the results from only one data reduction method are used for comparison to the allowable values. The selection of the method is dependent on the analysis method used for data evaluation. Table 3L-5 describes the method of data reduction that is applicable to each component.~~The different methods of data evaluation are described in detail in Subsection 3L.5.5. Briefly, Method I is used for components that have many closely spaced natural vibration modes and utilizes the strain energy weighting method applied to all modes over the frequency range of interest. This method has previously been applied to the In-core Monitor (ICM) housings, shroud, top guide, and steam dryer skirt and support ring. Method II is similar to Method I, except that it is applied to two frequency bands, 0-100 Hz and 100-200 Hz. This method has previously been applied to the steam dryer drain channels and hood. Method III is used for components that have relatively few, distinct dominant natural modes that are matched to the analytical modes. This method has previously been applied to the in-core guide tubes. Table 3L-5 describes the method of data reduction that is applicable to each component. It should be noted that the 200 Hz frequency range is approximate and is dependent on the SRV standpipe design. The frequency range monitored and evaluated in the FIV test program is adjusted to bound the range of frequencies determined for the final SRV standpipe design.~~

RAI 3.9-134b revised

3L.5.4.1 Time History Analysis

The time history method uses the analyzer's time capture mode of operation. ~~The time~~ Time capture is performed for a period of several minutes for all the selected sensors and test conditions. The frequency bandwidth for the time capture is chosen to accommodate 0-200 Hz as a minimum for most channels.

For comparison to the allowable vibration amplitude, the measured peak-to-peak (p-p) value over specified bandwidths needs to be obtained for sensors in specific components. The bandwidths used for p-p measurements for various components are shown in Table 3L-5. There are four bandwidths for time history p-p measurement: 0-200 Hz, 0-100 Hz, 100-200 Hz and 0-1600 Hz. The 0-1600 Hz is used only for the accelerometer for the purpose of detecting impacts. The other three bandwidths are used for normal vibrations.

For the 0-200 Hz bandwidth, the maximum p-p values over several minutes of data for selected sensors and test conditions are obtained directly from the time capture. Specification of the bandwidth for time capture (0-200 Hz) automatically results in a low-pass filtered signal.

In order to obtain the maximum p-p in the 0-100 Hz range, the histogram operation is employed on the time capture traces. When the bandwidth (0-100 Hz) is specified in the histogram operation, the signal is automatically low-pass filtered in the specified frequency range. The histogram measurement shows how the amplitude of the input signal is distributed between its maximum and minimum values. The horizontal axis is the amplitude axis and usually the center of the horizontal axis is the zero point with positive and negative amplitudes on either side of the zero. The vertical axis is the number of counts or the number of times a particular amplitude value occurs in a time-history. From the histogram, the maximum positive and maximum negative values in a time history can be obtained, from which the maximum p-p of the time history can be obtained.

For the 100-200 Hz bandwidth range, the time captured traces are filtered in the 100-200 Hz range and the p-p is obtained over a period of several minutes. The filtered time history between 100 and 200 Hz is scanned to obtain maximum and minimum values to get p-p values.

For the 0-1600 Hz range for accelerometers, the time history signal is examined for the presence of any impacts.

3L.5.4.2 Frequency Analysis

The spectrum shows the signal in the frequency domain. There are several different types of spectra. The linear spectrum is the Fourier transform of the time history signal. The auto power spectrum is the magnitude squared of the linear spectrum, which is computed by multiplying the Fourier transform of the signal by its complex conjugate. This spectrum contains magnitude information only. The spectra generated for ESBWR data reduction are auto power spectra. The spectra for selected sensors and test conditions are obtained from the captured time history described previously.

Signal averaging is used to obtain better statistical properties. It is possible to select the number of averages and the type of averaging. There are three types of averaging:

- Stable (normal)
- Exponential

- Peak Hold

The averaging method used for ESBWR is "Peak Hold", which compares the current spectral value of each individual frequency during the analysis interval to the last spectral value and holds the larger of the two. The resultant spectrum is a composite spectrum which envelopes the spectrums of all analysis intervals. The parameters used in the spectrum generation are described in Table 3L-6.

In order to obtain greater accuracy on amplitude of the frequency spectrum, a flat top window is selected.

From the spectrum, the dominant frequencies of vibration and their root mean square (RMS) magnitudes can be identified. The frequency is in the horizontal axis and the RMS magnitude is in the vertical axis. The p-p value of vibration at each dominant frequency is obtained by multiplying the RMS value (from the peak hold spectrum) by a factor of 6. This factor is obtained from many years of reactor experience and is a conservative estimate of the p-p value. This p-p value is then used to compute the stress at the sensor location and the maximum stress in the structure.

3L.5.5 Data Evaluation Methods

This section describes the methods used to evaluate the reduced test data for the purpose of determining whether maximum stress levels are below the maximum allowable fatigue stress limits for the materials. A significant portion of this evaluation lies in the determination of the natural vibration modes of the instrumented components as determined using finite element models. Subsection 3L.5.5.1 describes the finite element models used in this process. Subsection 3L.5.5.2 describes the steps involved in determining the maximum stress amplitudes from the reduced data.

3L.5.5.1 Finite Element Models

Dynamic analytical finite-element models are developed for the following ESBWR plant reactor internal components:

- Chimney Head and Steam Separators
- Shroud and Chimney
- Steam Dryer
- Standby Liquid Control Line

The dynamic analytical finite-element models are used to predict the natural vibration frequency, modal displacement, and modal strain and stress for each of the dominant vibration response modes. Descriptions of the finite-element models are given in the following sections.

3L.5.5.1.1 Chimney Head and Steam Separators

In order to determine the chimney head and steam separator vibration frequencies and mode shapes, ~~an axisymmetric~~a 3-dimensional model is developed using the ANSYS computer code (Reference 3L-3). The detailed model consists of the components that provide structural members within the assembly. Since the separator assembly units are the standard product used on prior BWR product lines, and that operates within the range of the design steam flow rates,

detailed modeling is not required. In this model, each nodal point has four degrees of freedom, namely:

- radial displacement;
- tangential displacement;
- vertical displacement; and
- meridian rotation.

3L.5.5.1.2 Shroud and Chimney

In order to determine the shroud vibration frequencies and mode shapes, an axisymmetric shell model is developed using the ANSYS computer code (Reference 3L-3). The detailed shell model consists of both the reactor pressure vessel (RPV), chimney, ~~chimney~~shroud support, and shroud such that the hydrodynamic interaction effects between the components are accounted for. In this model, each nodal point has four degrees of freedom, namely:

- radial displacement;
- tangential displacement;
- vertical displacement; and
- meridian rotation.

~~This shell model is applicable only to the axisymmetric finite element analysis of the shroud and vessel. Responses calculated from this model, other than that of the shroud, are not construed as being representative of other reactor components.~~

The following assumptions are made in generating the axisymmetric shell model:

(1) Discrete components move in unison for ~~guide tubes,~~ steam separators, standpipes, and control rod drive housings and guide tubes.

(2) Masses are lumped at the nodal points. Rotational inertias of the masses are neglected.

(3) Stiffnesses of control rods, control rod drives, steam dryers, and in-core housings are neglected.

(4) Top guide ~~beam~~ and core plate masses are ~~assumed to have zero rotational stiffness~~lumped to the shroud.

(5) Masses of CRD housings below the vessel are lumped to the bottom head.

Equivalent shells are used to model the mass and stiffness characteristics of the guide tubes, steam separators, and standpipes such that they match the frequencies obtained from a horizontal beam model.

Diagonal hydrodynamic mass terms are selected such that the beam mode frequencies of the shell model agree with those from the beam model.

The RPV, chimney and shroud are modeled as thin shell elements. ~~Discrete components such as guide tubes are modeled as equivalent thin shell elements.~~ The shell element data are defined in terms of thickness, mass density, modulus of elasticity, and Poisson's ratio for the appropriate material and temperature.

The natural frequencies and mode shapes of the shroud shell model are given in terms of two parameters, termed "n" and "m". The "n" parameter refers to the number of circumferential waves, while the "m" parameter refers to the number of axial half-waves. Thus, for beam types of ~~one~~ vibration, n=1.

3L.5.5.1.3 Steam Dryer

The design of the steam dryer assembly for the ESBWR prototype plant is similar to ABWR. ~~somewhat different from the original steam dryers used in previous BWR designs. Specifically, the major differences are in:~~

~~(1)the skirt and support ring diameters;~~

~~(2)the annulus size between the skirt and reactor pressure vessel;~~

~~(3)the flow path between the dryer banks and the vessel head; and~~

~~(4)the design details of the dryer skirt, drain channels and hoods.~~

~~In addition~~However, the total steam flow rate of the ESBWR prototype plant is different from past designs. These differences warrant a detailed vibration analysis and test monitoring to assure the adequacy of the new design to withstand the flow-induced vibration.

In the ESBWR prototype plant FIV test program of the steam dryer assembly, accelerometers were located on the cover plate and several locations on the skirt, and strain gages ~~are~~were located directly on the skirt, drain channels~~, support ring~~ and hoods (Reference 3L-~~7~~5). In addition, pressure sensors ~~are~~were used to measure the pressure differentials between the inside and outside of the ~~dryer~~ hood and ~~dryer~~ skirt. The differential pressure fluctuation across the ~~dryer~~ hoods is the primary forcing function causing vibration of the upper part of the steam dryer structure. The differential pressure fluctuation across the ~~dryer~~ skirt is the primary forcing function causing the vibration of the lower part of the steam dryer ~~skirt~~structure.

A dynamic finite element model of the steam dryer assembly is developed using the ANSYS computer code (References 3L-3 and 3L-6). Due to the complicated geometry and the large size of the analytical model, major components may be modeled with coarse meshes such that their dynamic contributions are accounted for in the whole steam dryer assembly vibration responses. Separate refined dynamic finite element models of the major components are then developed to provide a high resolution of the component's response calculation.

The structural material properties and density for the steam dryer components at temperature are used in the model. The effect of the water on the dynamic responses is accounted for by explicitly modeling the dynamic properties of the fluid in ~~using a direct lumped mass input. These added mass inputs include~~ the submerged portions of the ~~dryer~~ skirt, drain channels, and the ~~lower support~~base ring.

Prior analytical models have predicted that the vibration modes are ~~very~~ closely spaced.

3L.5.5.1.4 Standby Liquid Control Lines

In the ESBWR prototype plant reactor, there are two standby liquid control pipes that enter the reactor vessel and are routed to the shroud. To accurately predict the vibration characteristic of the standby liquid control line, a dynamic finite element model of the entire line is developed

~~using the ANSYS computer code~~. In the model, the ends of the line are fixed anchor points since the lines are welded at the vessel nozzle and the shroud attachment points.

3L.5.5.2 Stress Evaluation

Table 3L-7 lists the methods that are used for each instrumented component for the ESBWR prototype plant FIV test program. Evaluation of all internals except the steam dryer is contained in this subsection, steam dryer structural evaluation is contained in Subsection 3L.5.5.3. For this section, Method I is used for components that have many closely spaced natural vibration modes and utilizes the strain energy weighting method applied to all modes over the frequency range of interest. This method has previously been applied to the ABWR prototype plant startup tests of In-core Monotr (IC) housings, and shroud. Method II is similar to Method I, except that it is applied to two frequency bands, 0-100 Hz and 100-200 Hz. Method III is used for components that have relatively few, distinct dominant natural modes that are matched to the analytical modes. This method has previously been applied to the in-core guide tubes.

Maximum stress amplitude values for evaluation against allowable limits are determined from the test data and finite element models using one of ~~two~~ three different evaluation methods. The method used for a particular component depends on the complexity of that component's vibration characteristics. Each of these methods yield conservatively high predictions of the maximum stress anywhere on the structure. These conservatively high stress predictions are compared against conservatively low acceptance criteria to assure that none of the components is experiencing high stress vibrations that might cause fatigue failures. ~~Table 3L-7 lists the methods that are used for each instrumented component for the ESBWR prototype plant FIV test program.~~ The acceptable fatigue limit stress amplitude for the reactor internals component material [68.9 MPa (10,000 psi)], with the exception of the steam dryer. ~~The fatigue analysis performed for the ESBWR steam dryer will use a fatigue limit stress amplitude of [93.7 MPa (13,600 psi)]. For the outer hood component, which is subjected to higher pressure loading in the region of the main steam lines, the fatigue limit stress amplitude of [74.4 MPa (10,800 psi)]. The higher limit is justified because the dryer is a nonsafety-related component, performs no safety functions, and is only required to maintain its structural integrity (no loose parts generated) for normal, transient and accident conditions.~~

RAI 3.9-66, -144Ba revision

Method I is used for components that have many closely spaced vibration frequencies and/or closely spaced natural vibration modes distributed over a relatively narrow frequency range. The method utilizes a strain energy weighting method applied to all modes over the entire frequency range. It is applied by determining the maximum peak-to-peak (p-p) amplitude from an unfiltered time history segment. This maximum value is multiplied by a combined shape factor (derived from the strain energy weighting method) and stress concentration factors to yield the maximum stress value that could be expected to be found anywhere on the structure. This value is then compared against the acceptable fatigue limit stress amplitude for the component and material.

Method II is used for components that have many closely spaced vibration frequencies and/or closely spaced natural vibration modes that are unevenly distributed over several frequency ranges. The method is very similar to Method I, except that it is applied over several separate frequency bands. The maximum stress amplitude values for each frequency band are then added together absolutely to yield a conservatively high value for the overall maximum stress

amplitude that could be found anywhere on the structure. This value is then compared against the acceptable fatigue limit stress amplitude for the component and material.

Method III is used for components that have relatively few, distinct dominant natural modes that can be easily identified and matched to the modes predicted by the finite element models. This method utilizes a mode shape factor for each vibration mode that relates the stress at the sensor location to the stress at the maximum stress location for that mode. Appropriate stress concentration factors are also considered in this process. Response spectra are generated from the sensor output, from which the equivalent maximum p-p strain amplitude for each mode can be determined. The mode shape and stress concentration factors are applied mode by mode to determine the maximum stress amplitude associated with each mode. Then the maximum stress amplitudes from each of the modes are added together absolutely to yield a conservatively high maximum overall stress amplitude for the structure. This value is then compared against the acceptable fatigue limit stress amplitude for the component and material.

These methods have identical initial steps to obtain mode shape factors for each natural mode. The steps for these methods are as follows. (Note: The evaluation method described here relates to strain gages. Similar steps are used for accelerometers used in their displacement mode. ~~and for LVDTs.~~ The example assumes a maximum allowable stress amplitude for the material of [68.9 MPa (10,000 psi)] for the purposes of illustration):

(1) The dynamic finite element model of each instrumented component is used to predict the natural vibration modal displacement, frequency and stress for each vibration response mode. Specifically, the computer model provides the following results for each mode:

ω_i = Natural frequency for vibration mode i

$\{\phi\}_i$ = Mass normalized displacement mode shape for vibration mode i.

(Normalized such that the generalized mass, $\{\phi\}_i^T[M]\{\phi\}_i$, is unity, where [M] is the mass matrix.)

$\{\sigma\}_i$ = Normalized stress distribution for vibration mode i.
(The stress corresponding to the mass normalized mode shape, $\{\phi\}_i$)

The theory and methods for calculation of these parameters may be found in text books on the subject of basic vibration analysis, such as Reference 3L-4.

(2) For each vibration mode, stress concentration factors are applied at weld locations and regions with high stress gradient. From this information, the maximum stress intensity location and value is determined for each vibration mode.

$$\sigma_{i,\max} = Max\{SCF_i \cdot \sigma_i\} \text{ considered over the entire structure}$$

where

SCF_i = Stress concentration factor at some location

σ_i = Normalized stress intensity at the same location

$\sigma_{i,\max}$ = Normalized maximum stress intensity for mode i

(3) From the stress distribution of Step 1, a mode shape factor is derived relating the stress at the sensor to the stress at the maximum stress location as determined in Step 2:

$$MSF_i = \frac{\sigma_i(\text{at maximum stress intensity location})}{\sigma_{i,sensor}}$$

where

MSF_i = Mode shape factor

$\sigma_{i,sensor}$ = Normalized stress at sensor location for vibration mode i

(4) The mode shape factor from Step 3 and the maximum allowable stress amplitude for the material [68.9 MPa (10,000 psi)] are used to determine the maximum allowable stress value at the sensor location for each mode.

$$\sigma_{i,sensor,allowed} = \frac{68.9\ MPa}{(MSF_i)\cdot(SCF_i)}$$

where

$\sigma_{i,sensor,allowed}$ = Maximum allowed zero to peak stress amplitude at sensor location for vibration mode i (stress amplitude at sensor when maximum stress amplitude in structure is 68.9 MPa)

(5) The allowable strain for mode i ($\varepsilon_{i,allowed}$) is then calculated from this maximum allowed stress amplitude at the sensor location:

$$\varepsilon_{i,allowed} = \frac{\sigma_{i,sensor,allowed}}{E}$$

where

E = Young's modulus [e.g., 1.862×10^5 MPa (27.0×10^6 psi) at 160°C]

This equation is for uniaxial stress components. A similar, but more complex procedure is used for biaxial stress structures such as the steam dryer skirt, drain channel and hood.

At this point, Methods I and II diverge from Method III.

3L.5.5.2.1 Methods I and II

The next two steps are identical for Methods I and II.

(6) A weighting factor is determined by the strain energy method, which begins by obtaining the solution to the following equation based on the expected forcing function:

$$\{U\} = q_1\{\phi\}_1 + q_2\{\phi\}_2 + \ldots = \sum_{i=1}^{N} q_i\{\phi\}_i$$

where

{U} = A vector representing the displacement response of the structure when subjected to the expected forcing function shape. This displacement response to an input forcing function is calculated from the finite element model on the computer.

$\{\phi\}_i$ = Mass normalized mode shape for vibration mode i. Mode shapes were determined from the modal analysis of the finite element model on the computer. The modes shapes are normalized such that the generalized mass, $\{\phi\}_i^T[M]\{\phi\}_i$, is unity (where [M] is the mass matrix).

q_i = Mode i response, dependent on load distribution. These coefficients are calculated from the previously calculated {U} and $\{\phi\}_i$ using formulas derived from the generalized Fourier Theorem.

This is an application of the generalized Fourier Theorem, which establishes that a displacement function such as {U} can be represented by a linear sum of the eigenfunctions, $\{\phi\}_i$. The theory and methods for calculation of these coefficients may be found in text books on the subject of basic vibration analysis, such as Reference 3L-4.

(7) The strain energy contribution, e_i, for each mode is then calculated:

$$e_i = \frac{1}{2} \cdot q_i^2 \cdot \{\phi\}_i^T \cdot [K] \cdot \{\phi\}_i$$

where

[K] = The structural stiffness matrix (For a more detailed explanation of the theory and calculation methods, see text books on the subject vibration analysis, such as Reference 3L-4.)

The next step is similar for both Methods I and II, the only difference being that Method I includes the entire frequency range in one group, while Method II uses several groups of frequency ranges.

(8) Then the strain energy weighted allowable strain vibration amplitude is calculated over a given frequency range by combining the weighted strain allowable values for each mode as follows:

For

$$\omega_I < \omega_1, \omega_2, \ldots, \omega_n \leq \omega_{II}$$

$$\varepsilon_{II,allowed} = \frac{e_1 \cdot \varepsilon_{1,allowed} + e_2 \cdot \varepsilon_{2,allowed} + \ldots + e_n \cdot \varepsilon_{n,allowed}}{e_1 + e_2 + \ldots + e_n}$$

where

$\varepsilon_{II,allowed}$ = Allowable strain value between ω_I and ω_{II}, which includes the stress concentration factor (SCF)

It should be noted that this step conservatively assumes that the peak stress of each mode occurs at the same physical location on the structure. In reality, the maximum stress locations for different modes may occur at different locations. Since the purpose of this calculation is just to confirm that the maximum stress is less than an acceptable limit, it is quite acceptable to add this conservatism. However, it should be understood that the value calculated is conservatively high, and it is not an accurate prediction of the actual stress amplitude. If a stress calculated in this manner should exceed the limit in a few situations, then a less conservative calculation can be used in those few cases.

The strain value in the above equation is the allowable strain used during the actual execution of the test. It represents the strain level at the sensor location when the maximum stress on the structure is 68.9 MPa (10,000 psi).

Step 9 is the same for both Methods I and II, except that it is applied to each of the multiple frequency ranges associated with Method II; whereas, Method I is only for one frequency range.

(9) The combined shape factor (CSF) is derived to relate the maximum zero-to-peak strain value measured at the sensor location to the corresponding maximum zero-to-peak stress intensity value on the structure.

$$\sigma_{II,\max} = \frac{\varepsilon_{II,measured,\max}}{\varepsilon_{II,allowed}} \cdot (68.9\ MPa) = \varepsilon_{II,measured,\max} \cdot CSF$$

where

$$CSF = \frac{(68.9\ MPa)}{\varepsilon_{II,allowed}}$$ = Combined Shape Factor with the SCF included.

$\sigma_{II,max}$ = Maximum zero-to-peak stress value anywhere on the structure for modes within the frequency range of ω_I to ω_{II}.

$\varepsilon_{II,measured,max}$ = Maximum measured zero-to-peak strain (one-half of maximum measured peak-to-peak) from time history of sensor band pass filtered over the frequency range ω_I to ω_{II}.

This is the maximum zero-to-peak stress value anywhere on the structure as determined by Method I. For Method I, this value is compared to 68.9 MPa (10,000 psi) for determination of acceptability. One additional step remains for Method II.

(10) The maximum stress values for each frequency band are added together absolutely to determine the overall maximum stress on the structure for comparison to the 68.9 MPa (10,000 psi) limit for the material.

$$\sigma_{MAX} = \sigma_{II,\max} + \sigma_{III,\max} + \ldots + \sigma_{N,\max}$$

where

σ_{MAX} = Maximum overall zero-to-peak stress anywhere on structure as determined by Method II.

$\sigma_{N,max}$ = Maximum zero-to-peak stress anywhere on structure within the frequency range of ω_{N-1} to ω_N (N-1 frequency ranges total).

σ_{MAX} is compared to the 68.9 MPa (10,000 psi) limit in order to determine acceptability under Method II.

It should be noted that this step conservatively assumes that the peak stress of each mode occurs at the same time. In reality, the maximum stress occurs at different times. Since the purpose of this calculation is just to confirm that the maximum stress is less than an acceptable limit, it is quite acceptable to add this conservatism. However, it should be understood that the value calculated is conservatively high, and it is not an accurate prediction of the actual stress amplitude. If a stress calculated in this manner should exceed the limit in a few situations, then a less conservative calculation can be used in those few cases.

3L.5.5.2.2 Method III~~(Deleted)~~

Method III uses the mode shape factor (MSF) from Step 3, the stress concentration factor (SCF) and the measured strain value to determine the maximum stress amplitude anywhere on the structure for each natural mode. Picking up after Step 5 from Subsection 3L.5.5.2:

(1) Maximum stress in the structure is calculated from the measured strain value at the sensor location.

$$\sigma_{i,MAX} = \varepsilon_{i,measured,\max} \cdot E \cdot MSF_i \cdot SCF_i$$

where

$\sigma_{i,MAX}$ = Maximum zero-to-peak stress anywhere on structure for mode i.

$\varepsilon_{i,measured,max}$ = Maximum zero-to-peak strain for mode i as determined from power spectrum from sensor signal.

E = Young's Modulus

MSF_i = Mode Shape Factor for mode i.

SCF_i = Stress Concentration Factor as applicable for maximum stress location for mode i.

(2) The maximum stress values for each mode are added together absolutely to determine the overall maximum stress on the structure for comparison to the 68.9 MPa (10,000 psi) limit for the material.

$$\sigma_{MAX} = \sigma_{1,MAX} + \sigma_{2,MAX} + \ldots + \sigma_{n,MAX}$$

where

σ_{MAX} = Maximum overall zero-to-peak stress anywhere on structure as determined by Method III.

$\sigma_{i,MAX}$ = Maximum zero-to-peak stress anywhere on structure for mode i (n total dominant modes).

σ_{MAX} is compared to the 68.9 MPa (10,000 psi) limit in order to determine acceptability under Method III.

It should be noted that this step conservatively assumes that the peak stress of each mode occurs at the same physical location on the structure and at the same time. In reality, the maximum stress locations for different modes may occur at different locations and at different times. Since the purpose of this calculation is just to confirm that the maximum stress is less than an acceptable limit, it is quite acceptable to add these conservatisms. However, it should be understood that the value calculated is conservatively high, and it is not an accurate prediction of the actual stress amplitude. If a stress calculated in this manner should exceed the limit in a few situations, then a less conservative calculation can be used in those few cases.

In summary, all three methods involve two significant conservatisms:

- The assumption of the maximum stresses occurring at the same location in a component, and

- The assumption that the maximum stresses for different modes occur at the same time.

Inclusion of these two significant conservatisms results in significantly higher calculated stresses.

3L.5.5.3 Stress Evaluation Steam Dryer

For one-dimensional (uni-axial) structural responses and with the strain gage located at the maximum stress location in the steam dryer, the determination of strain measurement acceptance criteria would be:

$$\varepsilon = \sigma / (E)$$

where

σ = peak stress intensity allowable limit

E = Young;s Modulus, 178 MPa (25.8 x 10^6 psi) at 288°C (55°F) for steam dryer material.

With a peak stress intensity allowable limit of 93.8 MPa (13,600 psi), the strain acceptance limit with the strain gage at the maximum stress location, is calculated as follows:

$\varepsilon = \sigma/(E) = 527\ \mu\varepsilon$ (zero-peak) or $1054\ \mu\varepsilon$ (peak-peak)

The structural analysis performed for the steam dryer design consists of a dynamic finite element analysis. To address the uncertainty in the structural natural frequencies, the load definition frequencies are varied over a range of ±10% of nominal in 2.5% steps (nine cases total). For the steam dryer, the structural responses are multi-dimensional (multi-axial), and the strain gages are not necessarily located at the maximum stress location since the maximum stress location can be predicted from the stress analysis may be in locations where it is not practical nor possible to install the strain gages or accelerometers (steam dryer interior location).

There are two methods used to assess the instrument acceptance criteria for the strain gauges and accelerometers based on the structural analysis results:

(1) Minimum load case method. In this method the minimum strain or accelerometer limit for the nine load cases is found and then reduced for the instrument uncertainty.

(2) Uncertainty assessment method. For each of the nine load cases, predicted strain and accelerometer values are determined that include location tolerance, and the instrument measure uncertainty. The mean and mean standard deviation of the predicted readings at each monitoring locations are calculated. The instrument limit is then based on the mean minus the standard deviation.

The most limiting strain and acceleration values from both methods are used for the acceptance limits

The fatigue analysis performed for the ESBWR steam dryer will use a fatigue limit stress amplitude of 93.8 MPa (13,600 psi). For all critical locations, including the outer bank hood component, which are subjected to higher pressure loading in the region of the main steam lines, the fatigue stress amplitude limit is 74.5 MPa (10,800 psi). The limit is justified because the steam dryer is a nonsafety-related component, performs no safety-related fuctions, and is only

RAI 3.9-66, -144Ba revision

required to maintain its structural integrity (no loose parts generated) for normal, transient and accident conditions.

RAI 3.9-66, -144Ba revision

3L.6 REFERENCES

3L-1 General Electric Company, "ESBWR Reactor Internals Flow Induced Vibration Program ~~Part 1~~", NEDE-33259P, Revision 1, Class III (Proprietary), ~~January 2006~~December 2007, and NEDO-33259, Class I (Non-proprietary), ~~January 2006~~December 2007.

3L-2 General Electric Company, "BWR Steam Dryer Integrity", SIL 644 Revision 2, August 30, 2006.

3L-3 ANSYS Engineering Analysis System User's Manual, applicable revision.

3L-4 Elements of Vibration Analysis, Leonard Meirovitch, McGraw Hill Book Co., 1975.

3L-5 General Electric Company, "Steam Dryer - Acoustic Load Definition," NEDE-33312P, Class III (Proprietary), ~~October~~ November 2007, and NEDO-33312, Class I (Non-Proprietary), ~~October~~November 2007. RAI 3.9-135 revision

3L-6 General Electric Company, "Steam Dryer - Structural Evaluation," NEDE-33313P, Class III (Proprietary), ~~October~~November 2007, and NEDO-33313, Class I (Non-Proprietary), ~~October~~November 2007. RAI 3.9-135 revision

3L-7 (Deleted)~~General Electric Company, "Steam Dryer – Instrumentation and Power Ascension Monitoring," NEDE-33314P, Class III (Proprietary), October 2007, and NEDO-33314, Class I (Non-Proprietary), October 2007.~~ RAI 3.9-58, -63, -135, -144a revision

3L-8 General Electric Company, "ESBWR Steam Dryer – Plant Based Load Evaluation Methodology," NEDC-33408P, Class III (Proprietary), February 2008, and NEDO-33408, Class I (Non-proprietary), February 2008. RAI 3.9-58 revision

RAI 3.9-141 revision

Table 3L-1

Comparison of Typical Major Steam Dryer Configuration Parameters

Steam Dryer Configuration Parameter	ESBWR ~~Dryer~~	ABWR	Replacement BWR/3 ~~Dryer~~
Number of Banks	6	6	6
Active height (flow area) for vane modules	~~1829~~ 1918 mm (65.6 m^2)	1848 mm (58.8 m^2)	~~1829~~ 1852 mm (54.3 m^2)
Approximate weight	~~60,000~~55,400 Kg	50,000 kg	45,545 Kg
Outside diameter of upper support ring	6920 mm	6808 mm	6096 mm
Overall height	~~5700~~ 5334 mm	5226 mm	~~5436~~ 4979 mm
Length of skirt	~~2736~~ 2668 mm	2731 mm	~~2692~~ 2432 mm
Skirt thickness	9.65 mm	7 mm	9.65 mm
Cover plate thickness	~~25.4~~12.7 mm	16 mm	~~25.4~~12.7 mm
Hood thickness	~~25.4~~19 mm (outer bank) 12.7 mm (inner banks)	16 mm (outer bank) 8 mm (inner banks)	25.4 mm (outer bank) 12.7 mm (inner banks)
(Deleted)~~Upper support ring cross-section~~	~~89 x 242 mm~~		~~152.4 x 203.2 mm~~
Average steamline flow velocity	~~49.7~~47 m/s	46 m/s	~~61.6~~62 m/s

Table 3L-2

Specific Steam Dryer Load Definition Legend

Normal (N)	Normal and/or abnormal loads associated with the system operating conditions, including thermal loads, depending on acceptance criteria. These include deadweight, static differential pressure, and fluctuating pressure loads.
TSV	Turbine stop valve closure induced loads in the main steam piping and components integral to or mounted thereon. For the steam dryer, these include acoustic and flow impact loads. Separate load cases are evaluated for load components that are separated in time (e.g., acoustic impact and flow impact).
LOCA8	Acoustic impact loads on the steam dryer due to a postulated steamline break. Separate load cases are evaluated for load components that are separated in time (e.g., acoustic impact and level swell impact).
LOCA9	Level swell impact loads on the steam dryer due to a postulated steamline break. Separate load cases are evaluated for load components that are separated in time (e.g., acoustic impact and level swell impact).

Table 3L-3

Typical Vibration Sensors

Vibration sensor type	Typical sensor model
Strain gauge	Kyowa Model KHC-10-120-G9
Accelerometer	Vibro-meter Model CA901
Dynamic pressure transducer	Vibro-meter Model CP104 and/or Model CP211

Table 3L-4

~~Typical~~ Sensor Locations and Types[1]

Equipment Item	Location on Equipment	Sensor Type	Location Basis
Steam Dryer Support Ring	On top of ~~dryer~~ support	Accelerometer (Acceleration Mode)	Past experience of steam dryer rocking
Steam Dryer Skirt	At bottom of steam dryer	Accelerometer (Displacement Mode)	Modal analysis
Steam Dryer Hood	~~At edge of~~ Dryer bank hood and end plate	Strain Gage Pressure Transducer	Past experience of cracks at weld & to obtain forcing function data if problem occurs
Steam Dryer Drain Channel	At top & bottom, side edge of ~~dryer~~ drain channels	Strain Gage	Modal analysis Past experience of cracks at weld
Steam Dryer Skirt	At top & bottom of ~~dryer~~ skirt.	Strain Gage Pressure Transducer	Modal analysis & to obtain forcing function data if problem occurs
Shroud	On the outside diameter near shroud bottom at maximum stress location	Strain Gage	~~Modal~~ Dynamic analysis
~~Top Guide~~Separator Top	On the ~~outside diameter of the top guide mounted to measure tangential & radial relative displacements between top guide and vessel.~~guide ring	~~Linear Variable Differential Transformer (LVDT)~~Accelerometer	Past experience to measure ~~shroud~~ separator motion
Vessel Dome Region	On steam dryer FIV instrument post.	Pressure Transducer	To obtain forcing function data if problem occurs
~~Vessel Annulus~~Chimney	On the middle of chimney at 4 different azimuths~~vertical FIV mounting bar in the annulus between the shroud and vessel walls.~~	~~Pressure Transducer~~Accelerometer	To obtain data on new design chimney vibration~~forcing function data if problem occurs.~~

Equipment Item	Location on Equipment	Sensor Type	Location Basis
Standby Liquid Control Line	~~On the joints between the vertical and horizontal runs~~Strain gages on the shroud penetration piping at the bottom along the principal stress directions Accelerometer near the end of the circular header to measure radial and tangential accelerations	Strain Gage and accelerometers	New design and dynamic analysis

1. Vibration data for all equipment listed in Table 3L-4 will be acquired during initial startup and power ascension testing. Pressure data, however, while recorded during startup testing, will not be evaluated in detail unless the primary vibration measurements indicate the need for further assessment.

RAI 3.9-133 S01

Table 3L-5

Applicable Data Reduction Method for Comparison to Criteria

Component	Sensor Type	Applicable Data Reduction Method		Frequency Bandwidth (Hz)(1)
Shroud	Strain Gages	~~I~~	Time History	0-100
Steam Dryer Skirt	Strain Gages	~~I~~	Time History	0-100
Steam Dryer Skirt	Accelerometer (Displacement)	~~I~~	Time History	0-100
Steam Dryer Drain Channels	Strain Gauges	~~II~~	Time History	0-100, 100-200
Steam Dryer Hoods	Strain Gages	~~II~~	Time History	0-100, 100-200
Steam Dryer Support Ring	Accelerometer	~~Impact~~	Time History	0-1600 0-80, 80-200
~~Top Guide~~Separator Top	~~Displacement~~Accelerometer	~~I~~	Time History	0-100
~~Vessel Annulus~~Chimney	~~Pressure sensors~~Accelerometer	~~I~~	Time History	0-200
Standby Liquid Control Lines	Strain Gages, Accelerometer	~~I~~	Time History	0-100~~200~~

RAI 3.9-133 S01

Notes

1. It should be noted that the 200 Hz frequency range is approximate and is dependent on the SRV standpipe design. The frequency range monitored and evaluated in the FIV test program is adjusted to bound the range of frequencies determined for the final SRV standpipe design.
2. Pressure sensors data reduction from steam dome, steam dryer skirt, and steam dryer hood are not included in this table. The pressure data from these components and the main steamlines are discussed in ~~Reference 3L-7~~Subsection 3L.4.6.

RAI 3.9-133 S01

Table 3L-6

Parameters Used in Spectrum Generation

Parameter	Value
Bandwidth	0-200 Hz*
Time length	3 minutes
No. of Fourier Lines	400
Resolution	0.5 Hz
Window	Flat Top
No. of averages	90
Overlap	0%
Noise reduction	None
Average Type	Peak-hold
P-P Value	= RMS x 6

* It should be noted that the 200 Hz frequency range is approximate and is dependent on the SRV standpipe design. The frequency range monitored and evaluated in the FIV test program is adjusted to bound the range of frequencies determined for the final SRV standpipe design.

Table 3L-7

Data Evaluation Methods to be Used for Each Component

Internal Component	Data Evaluation Method Used
Shroud and Chimney	I
Steam Dryer	~~I & II~~See Subsection 3L.5.5.3
Standby Liquid Control Line	~~I~~III

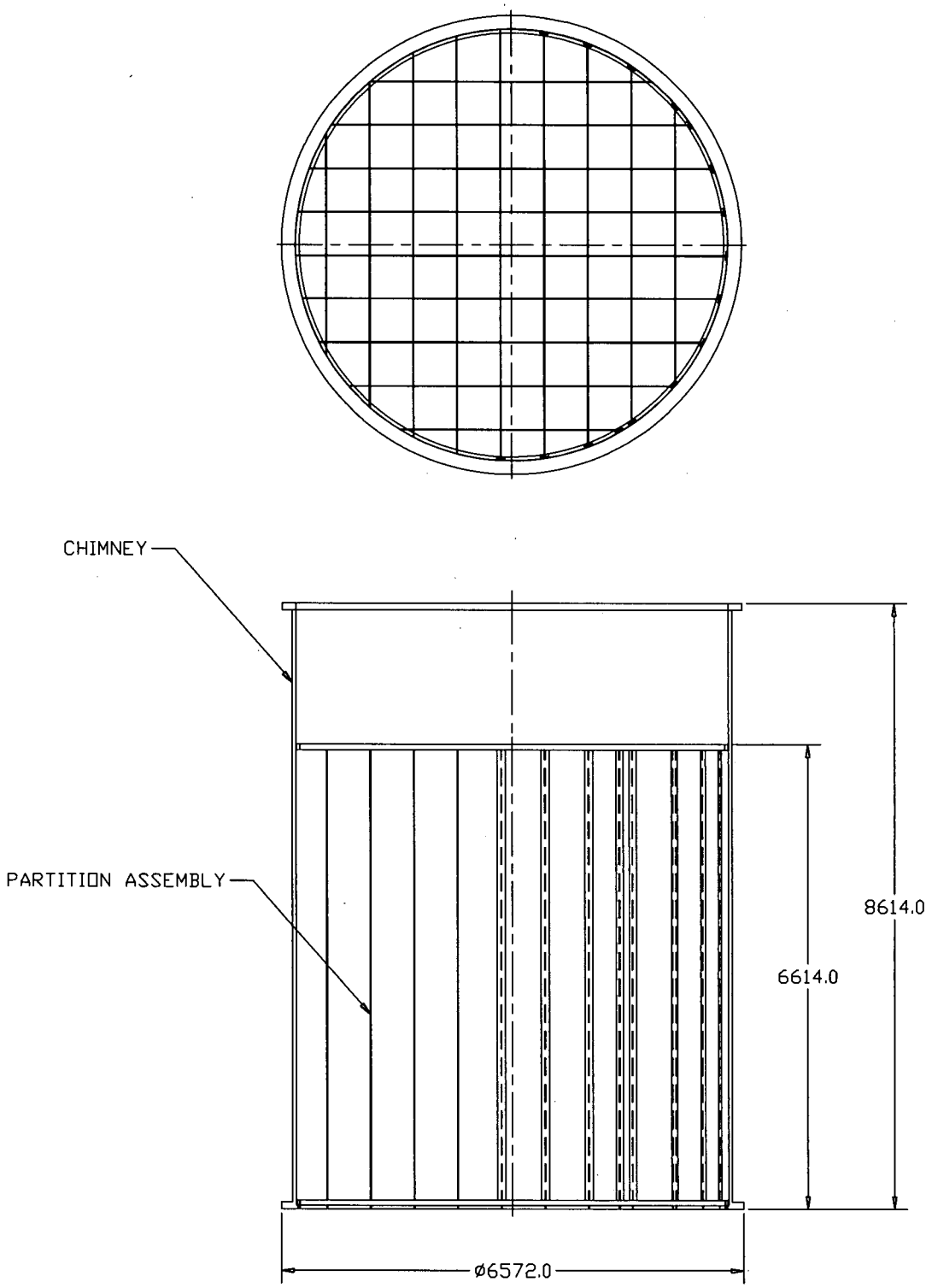

Figure 3L-1. Typical Chimney ~~and Partition~~ Assembly

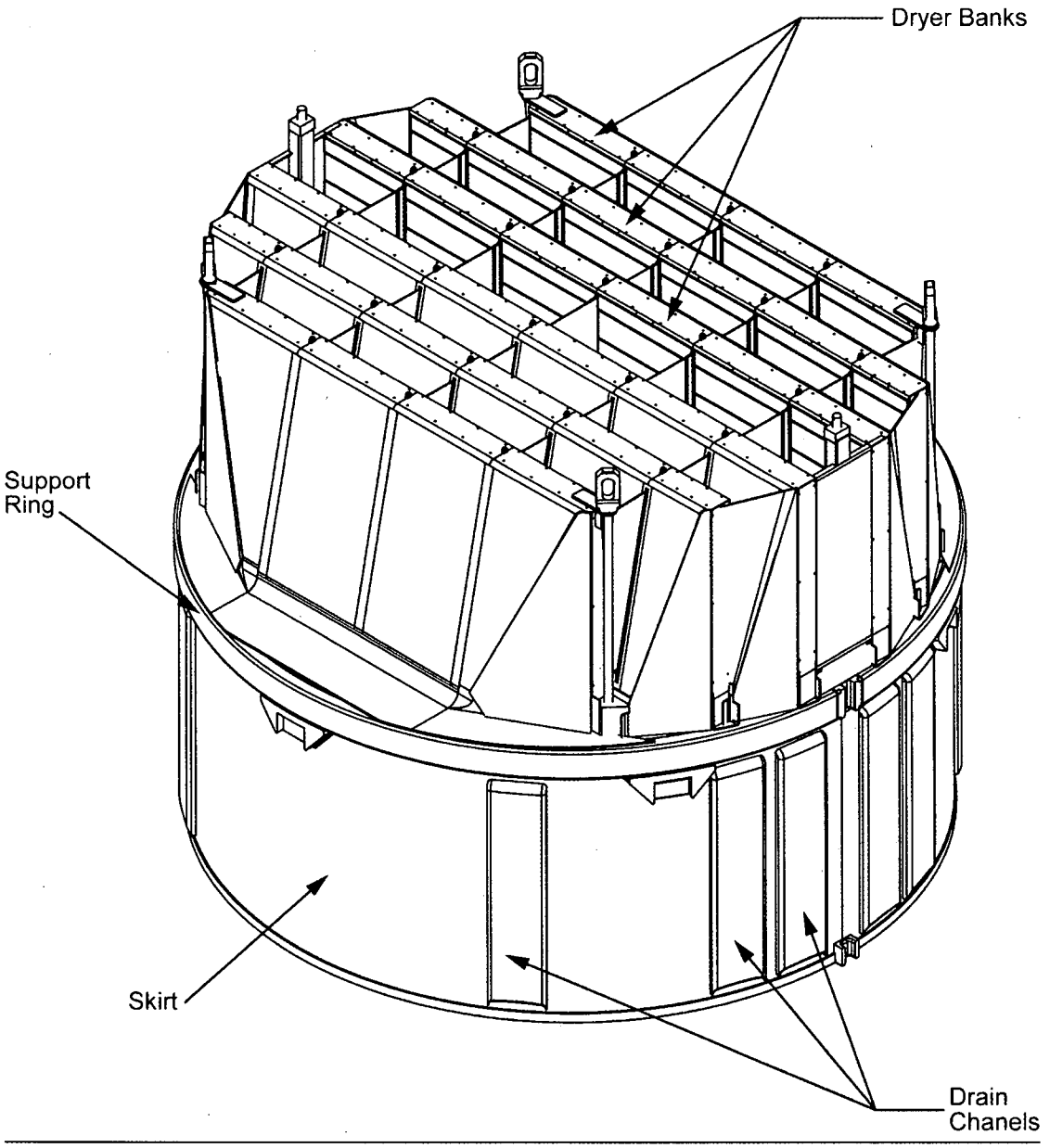
Dryer Banks
Support Ring
Skirt
Drain Chanels

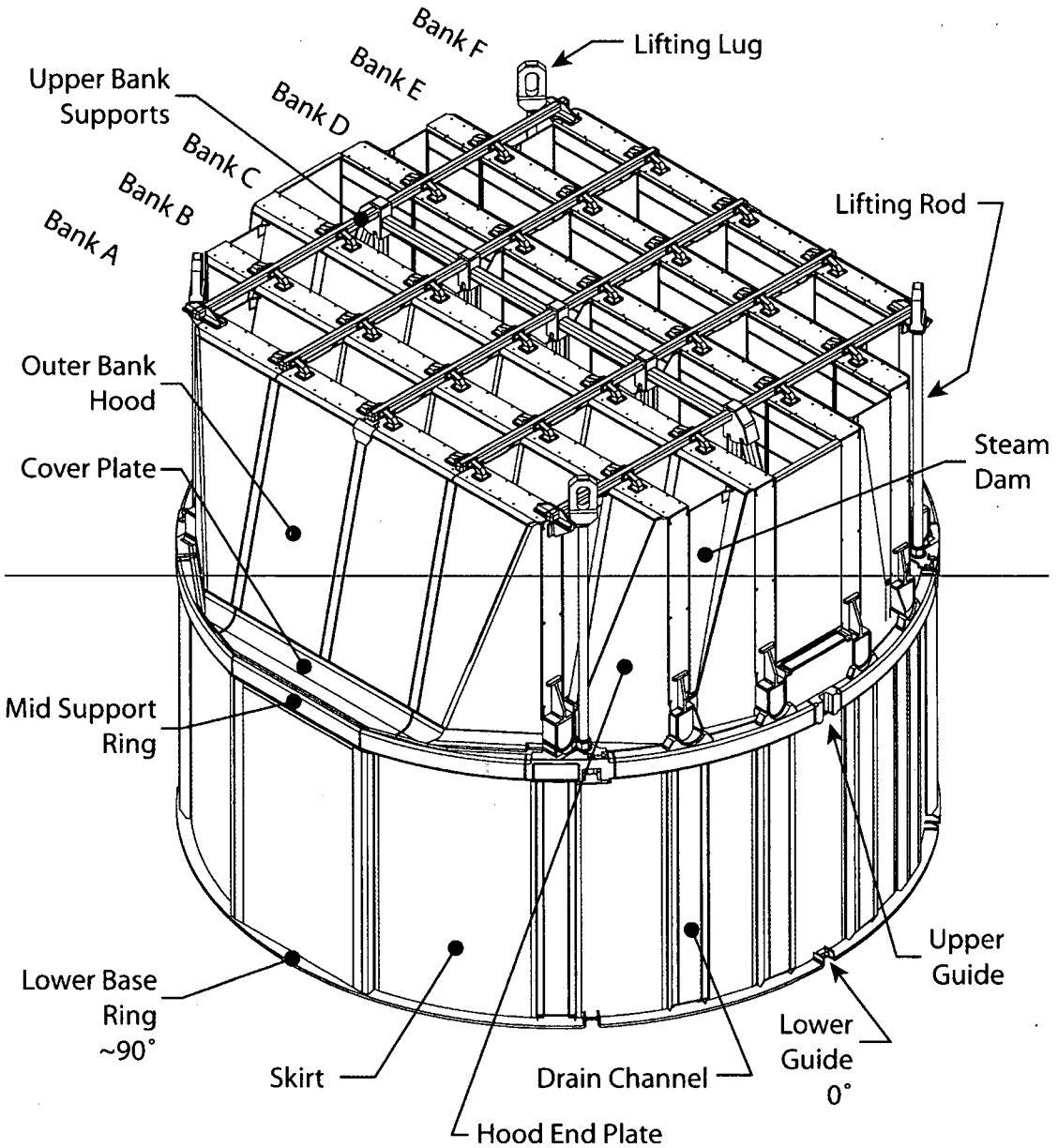

Figure 3L-2. Typical~~ESBWR~~ Steam Dryer Assembly