WOLF CREEK
NUCLEAR OPERATING CORPORATION

March 29, 2008

Terry J. Garrett
Vice President, Engineering

ET 08-0022

U. S. Nuclear Regulatory Commission
ATTN: Document Control Desk
Washington, DC 20555

Reference: Letter dated February 1, 2008, from USNRC to T. J. Garrett, WCNOC

Subject: Docket No. 50-482: Wolf Creek Nuclear Operating Corporation Response to Open Items Associated with the NRC Draft Safety Evaluation for the Wolf Creek Generating Station Application for License Renewal

Gentlemen:

In the referenced letter, the NRC issued its draft Safety Evaluation Report (SER) with Open Items related to the License Renewal of the Wolf Creek Generating Station. In Section 1.5 of the Safety Evaluation, the NRC identified five open items, two related to the Staff evaluation of station blackout scoping and three related to metal fatigue analyses. The Attachment provides the responses to these open items. The Enclosure provides a simplified electrical one-line diagram of the Wolf Creek Generating Station (WCGS) switchyard as an aid for the response to Open Item 2.5-1.

In the February 1, 2008 letter, the NRC also requested Wolf Creek Nuclear Operating Corporation (WCNOC) to review the SER for accuracy and provide comments to the Staff. WCNOC letter, ET 08-0020, provides those comments.

A121
NRR

This letter contains no commitments. If you have any questions concerning this matter, please contact me at (620) 364-4084, or Mr. Richard Flannigan at (620) 364-4117.

Sincerely,

Terry J. Garrett

TJG/rlt

Attachment: Wolf Creek Nuclear Operating Corporation (WCNOC) response to each of the five open items identified by the NRC Staff in Section 1.5 of the draft SER

Enclosure: Simplified electrical one-line diagram of the Wolf Creek Generating Station 345 kV switchyard

cc: E. E. Collins (NRC), w/a, w/e
V. G. Gaddy (NRC), w/a, w/e
B. K. Singal (NRC), w/a, w/e
T. M. Tran (NRC), w/a, w/e
Senior Resident Inspector (NRC), w/a, w/e

STATE OF KANSAS)
) SS
COUNTY OF COFFEY)

Terry J. Garrett, of lawful age, being first duly sworn upon oath says that he is Vice President Engineering of Wolf Creek Nuclear Operating Corporation; that he has read the foregoing document and knows the contents thereof; that he has executed the same for and on behalf of said Corporation with full power and authority to do so; and that the facts therein stated are true and correct to the best of his knowledge, information and belief.

By _____
Terry J. Garrett
Vice President Engineering

SUBSCRIBED and sworn to before me this 29th day of March, 2008.

OFFICIAL SEAL
NOTARY PUBLIC STATE OF KANSAS
RHONDA L. TIEMEYER
MY COMMISSION EXPIRES
January 11, 2010

Rhonda L. Tiemeyer
Notary Public

Expiration Date January 11, 2010

Attachment

This Attachment provides the Wolf Creek Nuclear Operating Corporation (WCNOC) response to the five open items identified by the NRC Staff in Section 1.5 of the draft SER. For completeness, each open item (OI) is repeated here, followed by the WCNOC response.

OI 2.5-1

Information provided by the applicant for equipment relied on to meet the requirements of the station blackout (SBO) rule (10 CFR 50.63) for license renewal (10 CFR 54.4(a)(3)) is inconsistent with the staff review criteria. Hence, the applicant should include the circuits up to and including the switchyard circuit breakers used for SBO recovery within the scope of license renewal.

WCNOC Response to OI 2.5-1

As an aid for the discussion in response to open item 2.5-1, Enclosure 1 provides a simplified electrical one-line diagram of the Wolf Creek Generating Station (WCGS) 345 kV switchyard. The WCGS switchyard has eight (8) 2000 Amp rated line and generator breakers, connected in a breaker and a half scheme.

10 CFR 50.63, Loss of all alternating current power, states that specified station blackout shall be based on the following factors: (i) The redundancy of the onsite emergency ac power sources; (ii) The reliability of the onsite emergency ac power sources; (iii) The expected frequency of loss of offsite power; and (iv) The probable time needed to restore offsite power. The following sections provide the method by which WCGS' design and licensing bases currently meet these requirements. Additionally, the sections that discuss the protection of downstream safety circuits and plant operator control to energize and de-energize safety circuits clarify how WCNOC meets the NRC Staff recommended technical requirements for recovery paths as identified by the draft SER.

Brief Overview of WCGS Switchyard:

The switchyard is comprised of the following:

Two	345 kV Busses	(referred to as the West Bus and East Bus)
Three	Breaker strings which connect the two 345 kV busses together	
Eight	345 kV Breakers	
One	Generator Output connection tied between Breakers 345-50 and 345-60	
Three	Transmission Lines in.	
	• LaCygne	Breakers 345-110/345-120
	• Benton	Breakers 345-70/345-80
	• Rosehill	Breakers 345-40/345-50

Plant Start-Up Transformer connected to the West 345 kV Bus.

Switchyard No.7 Transformer connected to the East 345 kV Bus.

At WCGS, the offsite power sources are the 345 kV switchyard busses. This is the West 345 kV bus and the East 345 kV bus.

SBO Recovery Paths are:

The primary SBO recovery lineup for safety circuits train B is up through ESF Transformer # 2, through plant breaker 201 to 13.8 kV bus feed from the start-up transformer secondary. The start-up transformer is included in the recovery path and is connected via a short overhead tie line to the West 345 kV bus via normally closed disconnect switch 345-163.

The secondary SBO recovery lineup for safety circuits train A is through ESF Transformer # 1, up through normally closed disconnect switch 13-23. As part of the License Renewal resolution to open item 3.0.3.1.10-1, WCNOC is proposing to include the underground cable from the normally closed disconnect switch 13-23 up to and including switchyard breaker 13-48. Additionally WCNOC has included in the proposal, to resolve open item 2.5-1, the No. 7 transformer and overhead 345 kV bus leads up to the East 345 kV Switchyard Bus, which also includes normally closed disconnect switch 345-167.

To address the NRC's March 5, 2008 issuance of "Proposed License Renewal Interim Staff Guidance LR-ISG-2008-01: Staff Guidance Regarding the Station Blackout Rule (10 CFR 50.63) Associated with License Renewal Applications," WCNOC has scoped into License Renewal two 345 kV breakers. For the primary SBO recovery path involving the start-up transformer, 345 kV switchyard breaker 345-70 is identified as the scoped breaker. For secondary SBO recovery path involving ESF Transformer #1, 345 kV switchyard breaker 345-120 is the identified as the scoped breaker. Both 345 kV breaker lineups are completed utilizing normal coordination with the Westar Energy transmission operator responsible for system blackout restoration. The changes to the license renewal scope to resolve Open Item 2.5-1 have been submitted as an Amendment to the License Renewal Application under separate letter.

Protection of Downstream Safety Circuits for both recovery paths is provided as follows:

Plant breaker 201 provides protection of downstream safety circuits train B, for the primary SBO recovery lineup from the West Bus through the start-up transformer.

Breaker 201 is designed to protect for start-up transformer faults, West 345 kV and overhead tie line faults, feeder cable faults from breaker 201 to ESF #2 transformer and ESF # 2 transformer faults.

Switchyard breaker 13-48 provides protection for downstream safety circuits train A in the secondary SBO recovery lineup from the East Bus through No. 7 transformer.

Breaker 13-48 is designed to protect for No. 7 transformer faults, East 345 kV and lead line faults, underground cable faults to ESF #1 transformer and ESF #1 transformer faults.

Plant Operator Control to Energize and De-energize safety circuits is accomplished as follows:

SBO restoration begins when offsite power is restored to one or both of the 345 kV busses.

Once offsite power is restored to the West 345 kV bus, plant operator action is required to close plant breaker 201 to energize ESF transformer # 2 and subsequent closing of normal feed breaker to the safety bus.

For the secondary SBO line, once offsite power is restored to the East 345 kV bus, plant operator action is required to close switchyard breaker 13-48 to energize ESF transformer # 1 and subsequent closing of normal feed breaker to the safety bus.

Summary:

In conclusion, the proposed primary and secondary SBO recovery line-ups as described from either the West or East 345 kV switchyard bus meet the NRC Staff recommended technical requirements as listed in the draft SER:

1. Plant breaker 201 and switchyard breaker 13-48 provide protection for downstream safety circuits.
2. Plant operator control for energization and de-energization of safety circuits is accomplished by plant operator control of breaker 201 and switchyard breaker 13-48.
3. Closing plant breaker 201 or switchyard breaker 13-48 accomplishes SBO recovery lineups.

OI 3.0.3.1.10-1

Information provided by the applicant for equipment relied on to meet the requirements of the SBO Rule (10 CFR 50.63) for license renewal (10 CFR 54.4(a)(3)) are inconsistent with the staff review criteria. Hence, the applicant should include the circuits up to and including the switchyard circuit breakers within the scope of license renewal, and managed by the Aging Management Program related to Inaccessible Medium Voltage Cables Not Subject to 10 CFR 50.49, Environmental Qualification Requirements.

WCNOC Response to OI 3.0.3.1.10-1

As noted in the Response to OI 2.5-1, WCNOC has included the inaccessible medium voltage switchyard cable from disconnect 13-23 up to breaker 13-48 in the scope of license renewal. The Aging Management Program related to Inaccessible Medium Voltage Cables Not Subject to 10 CFR 50.49, Environmental Qualification Requirements applies to this cable. The changes to the license renewal scope to resolve Open Item 3.0.3.1.10-1 have been submitted as an Amendment to the License Renewal Application under separate letter.

OI 4.3-3

By letter dated September 4, 2007, the staff questioned the applicant's methodology used to calculate the baseline fatigue usage factors for the surge line hot leg nozzle, charging nozzle, and alternate charging nozzle locations.

In its response dated October 3, 2007, the applicant committed (Commitment No. 38) to address the backward projection for the surge line hot leg nozzle, charging nozzles, and alternate charging nozzles by January 31, 2008. The applicant committed to calculate an updated baseline fatigue usage factor that adequately bounds transients experienced before the monitoring of cumulative usage factors (CUFs) was started. The existing baseline CUF for all monitored locations will be increased to bound the potential CUF contribution from the transients that were under-represented in the existing baseline.

The staff will review the applicant's backward projection again to ensure that the methodology used is bounding, to demonstrate the effects of aging will be managed adequately.

WCNOC Response to OI 4.3-3

WCNOC letter ET 08-0007, dated January 25, 2008, submitted the results of an updated calculation for baseline fatigue usage factors. The NRC Staff reviewed the January 25, 2008 submittal and requested additional information in a letter dated February 28, 2008. The February 28, 2008 NRC letter contains a follow-up RAI 4.3-3 related to this open item. The follow-up RAI 4.3-3 requests additional calculations and discussions for the baseline fatigue usage factors to address actions regarding the additional insurge/outsurge cycles and the differential contribution of fatigue for each category of charging event. WCNOC response to follow-up RAI 4.3-3 is being submitted under separate letter, specifically addressing the February 28, 2008 Staff request for additional information.

OI 4.3

The staff evaluation of LRA Sections 4.3.3 and 4.3.5 verified that the fatigue analyses were not projected for the period of extended operation. Initially, the analyses were not completed for the staff's review and, therefore, did not satisfy the requirements described in 10 CFR 54.21(c)(1)(ii).

By letter dated November 30, 2007, the applicant provided its assessment of the impact of high-cycle fatigue to the total fatigue usage factor for the reactor pressure vessel internals and the applicant addressed its assumed thermal cycle count for allowable secondary stress range reduction factor in B31.1 and ASME Code Section III, Class 2 and 3 piping.

The staff will verify the validity of the applicant's assessment by performing an additional audit of the revised plant design and basis documents in early 2008.

WCNOC Response to OI 4.3

Based on discussions with the Staff, WCNOC owes no additional information to the Staff at this time in order to support closure of this issue. WCNOC will work with NRC Staff to close this open item by coordinating a review of the plant design and basis documents.

OI 4.3-1

By letter dated September 4, 2007, the staff requested that the applicant:

(a) Clearly define 1D thermal stresses for different locations on the component (nozzle, nozzle inner radius) and thermal conditions (stratification). In addition, explain how the 1D thermal stress is derived for the surge line hot leg nozzle under stratification.

(b) Explain what is the limitation of 1D thermal stress methodology and describe what kind of conditions cannot be mathematically proven to be conservative.

(c) Provide a justification that demonstrates ASME Code compliance using the 1D thermal stress methodology.

In a letter dated October 3, 2007, the applicant provided its response to address 1D virtual stress related issues. In the response, the applicant stated that FatiguePro 1D stress analysis is demonstrably conservative for all load pairs that include significant transients. However, it is the staff's understanding that the methodology used by the applicant is not consistent with the

rules set forth in the ASME Code, Section III, and can generate inaccurately low stress results. Therefore, the staff determined that the applicant did not provide sufficient information to address the concerns raised in the staff's follow-up questions to RAI 4.3-1. On this basis, the staff determined that this is an open item. This has been identified as OI 4.3-1.

WCNOC Response to OI 4.3-1

WCNOC letters ET 07-0032, dated July 26, 2007 and ET 07-0046, dated October 3, 2007, submitted responses to address 1D virtual stress related issues. The NRC Staff reviewed these submittals and requested additional information in a letter dated February 28, 2008. The February 28, 2008 NRC letter contains a follow-up RAI 4.3-1 related to this open item. The follow-up RAI 4.3-1 requests a validation of the fatigue monitoring program methodology using an ASME NB-3200 stress analysis. For WCGS, this analysis is to be performed for the hot leg surge line nozzle monitoring location. WCNOC response to follow-up RAI 4.3-3 is being submitted under separate letter, specifically addressing the Staff's February 28, 2008 request for additional information.

Enclosure 1

Simplified electrical one-line diagram of the Wolf Creek Generating Station
345 kV switchyard

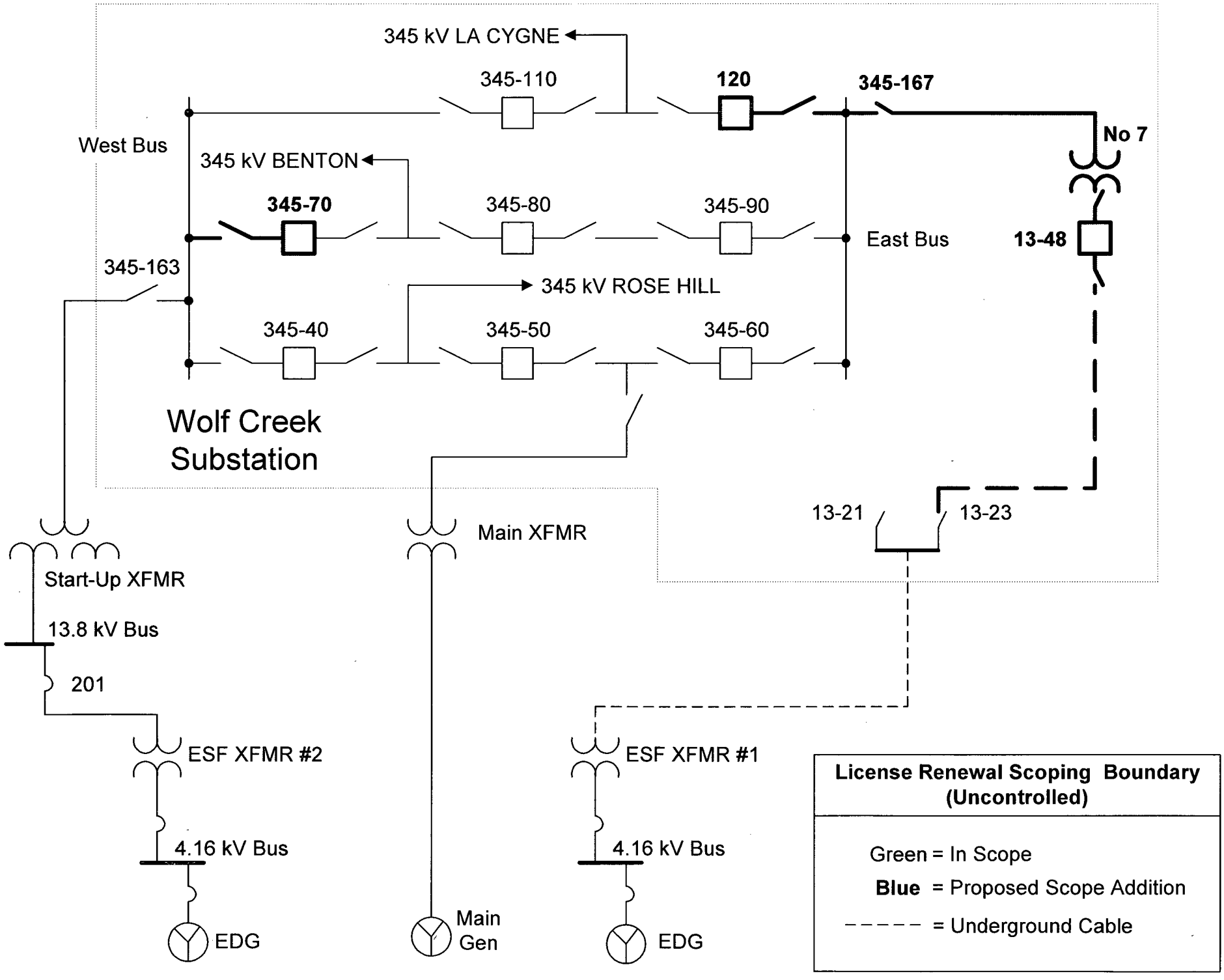
345 kV LA CYGNE
345-110
120
345-167
No 7
West Bus
345 kV BENTON
345-70
345-80
345-90
East Bus
13-48
345-163
345 kV ROSE HILL
345-40
345-50
345-60
Wolf Creek
Substation
13-21
13-23
Main XFMR
Start-Up XFMR
13.8 kV Bus
201
ESF XFMR #2
ESF XFMR #1
4.16 kV Bus
4.16 kV Bus
EDG
Main
Gen
EDG
License Renewal Scoping Boundary
(Uncontrolled)
Green = In Scope
Blue = Proposed Scope Addition
= Underground Cable