HITACHI

GE Hitachi Nuclear Energy

James C. Kinsey
Vice President, ESBWR Licensing

PO Box 780 M/C A-55
Wilmington, NC 28402-0780
USA

T 910 675 5057
F 910 362 5057
jim.kinsey@ge.com

MFN 08-086 Supplement 20

Docket No. 52-010

March 31, 2008

U.S. Nuclear Regulatory Commission
Document Control Desk
Washington, D.C. 20555-0001

Subject: Response to Portion of NRC Request for Additional Information Letter No. 126 Related to ESBWR Design Certification Application, RAI Numbers 14.3-209, 14.3-225, 14.3-229, 14.3-230, 14.3-238, 14.3-385

The purpose of this letter is to submit the GE Hitachi Nuclear (GEH) response to the U. S. Nuclear Regulatory Commission (NRC) Request for Additional Information (RAI) sent by NRC Letter dated December 20, 2007 (Reference 1).

The GEH response to RAI Numbers 14.3-209, 14.3-225, 14.3-229, 14.3-230, 14.3-238, and 14.3-385 is addressed in Enclosure 1. The enclosed changes will be incorporated in the upcoming DCD Revision 5 submittal.

Verified DCD changes associated with this RAI response are identified in the enclosed DCD markups by enclosing the text within a black box. The marked-up pages may contain unverified changes in addition to the verified changes resulting from this RAI response. Other changes shown in the markup(s) may not be fully developed and approved for inclusion in DCD Revision 5.

If you have any questions or require additional information, please contact me.

Sincerely,

James C. Kinsey

James C. Kinsey
Vice President, ESBWR Licensing

D068
NRO

Reference:

1. MFN 07-718, Letter from U.S. Nuclear Regulatory Commission to Robert E. Brown, *Request For Additional Information Letter No. 126 Related To ESBWR Design Certification Application*, dated December 20, 2007.

Enclosure:

1. Response to Portion of NRC Request for Additional Information Letter No. 126 Related to ESBWR Design Certification Application RAI Numbers 14.3-209, 14.3-225, 14.3-229, 14.3-230, 14.3-238, 14.3-385

cc:	AE Cubbage	USNRC (with enclosure)
	GB Stramback	GEH/San Jose (with enclosure)
	RE Brown	GEH/Wilmington (with enclosure)
	DH Hinds	GEH/Wilmington (with enclosure)
	eDRF	0000- 0081-5668 (RAI 14.3-209)
		0000- 0081-7890 (RAI 14.3-225)
		0000- 0082-1533 (RAI 14.3-229)
		0000-0081-5805 (RAI 14.3-230)
		0000-0081-9879 (RAI 14.3-238, 14.3-385)

Enclosure 1

MFN 08-086 Supplement 20

Response to Portion of NRC Request for

Additional Information Letter No. 126

Related to ESBWR Design Certification Application

RAI Numbers 14.3-209, 14.3-225, 14.3-229, 14.3-230, 14.3-238, 14.3-385

Note: Verified DCD changes associated with this RAI response are identified in the enclosed DCD markups by enclosing the text within a black box. The marked-up pages may contain unverified changes in addition to the verified changes resulting from this RAI response. Other changes shown in the markup(s) may not be fully developed and approved for inclusion in DCD Revision 5.

NRC RAI 14.3-209

NRC Summary:

Manual fire suppression capability should be provided for the containment. (DCD Tier 1, Section 2.16.3, Item (3))

NRC Full Text:

The revised text in Item (3) of DCD Tier 1 Section 2.16.3 specifically excludes the containment from the commitment to provided manual fire suppression capability to plant areas containing safety-related equipment. In accordance with 10 CFR 50, Appendix A, General Design Criterion (GDC) 3, Fire detection and fighting systems of appropriate capacity and capability shall be provided and designed to minimize the adverse effects of fires on structures, systems and components important to safety. Section 9.5.1 of Tier 2 includes the design commitment to provide manual suppression capability for all plant areas and Tier 2, Appendix 9A describes manual hose station coverage for the containment and drywell area via the containment hatches. Tier 1, Section 2.16.3 of the DCD should be revised to describe the design commitment for fire fighting capability inside the containment in accordance with GDC 3 and consistent with the design commitments in Tier 2.

GEH Response

GEH agrees that the Tier 1 description of manual fire suppression capability requires clarification. GEH never intended to exclude the containment vessel from design commitments regarding manual fire suppression capability. The term "excluding the containment vessel" was included in DCD Revision 4 to emphasize that automatic fire suppression is not a design requirement inside the containment, since the containment environment is inerted during power operations. The DCD text will be clarified by eliminating the ambiguous discussion. The focus of the Design Commitment and ITAAC is upon manual fire suppression, not automatic protective features. The ITAAC will confirm the correct proximity of manual fire suppression capability to areas where safety-related equipment is located, including assurance of manual fire fighting capability for areas inside the containment vessel when the containment vessel is not inerted.

DCD Impact

DCD Tier 1, Section 2.16.3, Item 3, Table 2.16.3-2, Item 3, and DCD Tier 2, Section 9.5.1.9, are revised as shown on in the attached markup.

2.16.3 Fire Protection System

Design Description

The Fire Protection System (FPS) is a nonsafety-related, integrated complex of components and equipment that detects and suppresses fires in the plant.

The FPS is a as shown in Figure 2.16.3-1 and the component locations of the FPS are as shown in Table 2.16.3-1

(1) The functional arrangement of the FPS is as described in the Design Description of this Section 2.16.3 and as shown in Figure 2.16.3-1.

(2) The FPS components and piping identified in Table 2.16.3-1 remain functional during and after an SSE.

(3) The FPS provides for manual fire suppression capability to plant areas containing safety-related equipment~~, including those that have automatic fire suppression systems~~. ~~; excluding the containment vessel.~~

(4) The FPS provides two firewater storage sources.

   a. The Primary storage tanks contain a combined minimum usable firewater storage capacity of ≥3900 m^3 (1,030,000 gallons) of water.

   b. The designated site-specific Secondary firewater storage source contains a combined minimum usable firewater storage capacity ≥1135.6 m^3 (300,000 gallons) of water.

(5) Each fire pump provides at least 454.2 m^3/hr (2000 gpm) discharge flow with adequate pressure.

(6) Smoke detectors provide fire detection capability and can be used to initiate fire alarms in areas containing safety-related equipment.

(7) The FPS provides post 72-hour makeup to the IC/PCC pools and Spent Fuel Pool.

   a. The primary diesel-driven fire pump is available to provide post-72 hour makeup to the IC/PCC pools and Spent Fuel Pool.

   b. The fuel oil tank for the primary diesel-driven fire pump contains adequate fuel oil capacity for 96 hours of fire pump operation.

(8) The minimum set of displays, alarms and controls, based on the applicable codes and standards, including HFE evaluations and emergency procedure guidelines, is available in the main control room..

Inspections, Tests, Analyses and Acceptance Criteria

Table 2.16.3-2 provides a definition of the inspections, test and/or analyses, together with associated acceptance criteria for the Fire Protection System.

Table 2.16.3-2

ITAAC For The Fire Protection System

Design Commitment	Inspections, Tests, Analyses	Acceptance Criteria
1. The functional arrangement of the FPS is as described in Subsection 2.16.3 and Figure 2.16.3-1.	Inspection of the as-built system will be conducted.	Inspection report(s) document that the as-built FPS conforms with the basic configuration contained in the Design Description of Subsection 2.16.3 and Figure 2.16.3-1.
2. The FPS components and piping identified in Table 2.16.3-1 remain functional during and after an SSE.	Analysis of the FPS components and piping identified in Table 2.16.3-1 will be performed to demonstrate that the components and piping will remain functional during and after an SSE. Inspection of the as-built FPS components and piping identified in Table 2.16.3-1 will be performed to verify that the components and piping are installed in accordance with the configurations specified by the analyses.	Analyses demonstrate that the FPS components and piping identified in Table 2.16.3-1 will remain functional during and after an SSE. Inspection report(s) document that the as-built components and piping identified in Table 2.16.3-1 are installed in accordance with the configurations specified by the analyses.
3. The FPS provides for manual fire suppression capability to plant areas containing safety-related equipment.~~, including those that have automatic fire suppression systems, excluding the containment vessel.~~	Inspection of the as-built manual fire suppression system will be performed to verify that any location that contains or could present a hazard to safety-related equipment can be reached by at least one effective hose stream with a maximum of 30.5 meters (100 feet) of hose.	Inspection report(s) of the as-built manual fire suppression system document that standpipes and manual hose stations exist. Standpipe and hose rack stations are located such that no location within a fire area is more than 30.5 m (100 ft) from a hose station. Standpipe and hose rack stations are located such that no safe shutdown equipment is more than 30.5 m (100 ft) from two hose stations on separate standpipes.

Automatic sprinklers provide protection for the areas identified in the fire hazard analysis, except where conditions dictate the use of other types of systems or fire suppression agents.

Each system consists of a piping network containing water under pressure, and thermally actuated closed-head sprinklers. Water discharges immediately from sprinklers opened by heat from a fire. The wet pipe sprinkler system meets the requirements of NFPA 13.

Preaction Sprinkler System (Manual or Automatic)

The preaction sprinkler system employs thermally actuated closed-head sprinklers attached to piping containing air under pressure. Fire detectors are installed in the same area as the sprinklers. A preaction system is used in areas where there is danger of serious water damage as a result of a leaking automatic sprinkler head, spurious actuation, or a pipe break. The preaction sprinkler system meets the requirements of NFPA 13.

Deluge System (Manual and/or Automatic)

Deluge systems are actuated automatically or manually depending upon the area and the nature of the equipment being protecting. Deluge systems employ open head sprinklers or nozzles attached to dry piping and water supply. Fire detectors are installed to cover the protected equipment or are in the same area as the nozzles. Deluge systems are normally used for hazards requiring an immediate application of water over an entire hazard area. The deluge system meets the requirements of NFPA 15.

9.5.1.8 Foam System

A foam system is provided for concentrated fuel oil or lube oil hazards.

A combination of infrared/ultraviolet detectors and thermal rate compensated detectors are used for fire detection that actuates preaction foam-water sprinkler or deluge foam-water spray systems to protect against inadvertent actuation.

The foam systems meet the requirements of NFPA 11 and NFPA 16.

9.5.1.9 Smoke Detection and Fire Alarm System

Smoke detectors installed in rooms containing safety-related equipment, except containment, and in areas containing significant amounts as determined by the FHA (Appendix 9A) of combustible materials provide early detection and warning of fires. Containment is an inerted space during normal operation. ~~Portable fire detection equipment is used inside containment during maintenance outages when the space is not inerted.~~The manual firefighting capability is provided for those containment spaces containing mechanical or electrical equipment that use, contain or requires for maintenance, significant quantities of combustibles, when the containment is not otherwise inerted.

Fire detector types are selected on the basis of the nature and burning characteristics of the materials within the room, and on the basis on the FHA (Appendix 9A). The selection of the detector type also includes specific consideration of the combustion products, type of hazard, and fire load expected as well as the effects of humidity, air velocity, temperature, ambient air conditions, radiation, air pressure, area configuration, and response time required. The detector locations are based upon environmental conditions, maintenance access, and As Low as Reasonably Achievable (ALARA) concerns.

NRC RAI 14.3-225

NRC Summary:

Post 72 hour temperature control

NRC Full Text:

In DCD Tier 1, Table 2.16.2-4, Item 4a, the confirmation of temperature rise is for a 72-hour duration. Please identify the systems that are required to assure that temperature rise does not exceed 15 degrees after 72. Please establish an ITAAC to verify this capability.

GEH Response

GEH has determined that an ITAAC to verify the temperature rise will not exceed 15°F after 72 hours is not necessary. The determination of the scope of ITAAC applicable to the CRHAVS is based on requirements established by the EPRI Utilities Requirements Document (URD) Volume 3, Chapter 9, Section 8.2. The URD does not specify any requirements pertaining to CRHA ventilation for periods greater than 72 hours.

GEH reviews also determined there are no regulatory requirements for establishing an ITAAC for ventilation system functional performance requirements for periods greater than 72 hours. However, the ESBWR design features include provisions for maintaining the MCR at a temperature no greater than 8.3°C (15°F) above the initial MCR temperature for any loss of cooling event, including SBO or LOCA conditions. When AC power is unavailable for an extended time the habitability requirements are then met by the operation of an Emergency Filter Unit (EFU).

The GEH response to RAI 6.4-7 (MFN 08-056, dated February 20, 2008) provides additional analysis of system functional performance requirements and provides revised system requirements located in DCD Tier 2, Sections 6.4.1, and 9.4.1. The safety basis for system performance requirements and basis for regulatory compliance were examined in the response to the RAI.

DCD Impact

No DCD changes will be made in response to this RAI.

NRC RAI 14.3-229

NRC Summary:

Drywell to wetwell bypass leakage capacity needs to be verified

NRC Full Text:

Drywell to wetwell bypass leakage capacity is an important assumption used in the containment analyses and needs to be verified. Please add (1) an item to DCD Tier 1, Section 2.15.3 giving the drywell to wetwell bypass leakage capacity and (2) add an ITAAC to DCD Tier 1, Table 2.15.3-2 to verify this value.

GEH Response

GEH agrees with the NRC request to revise the DCD. DCD Tier 1, Section 2.15.1, and Tables 2.15.1-1, and Table 2.15.1-2, will be revised to add ITAAC for drywell to wetwell (suppression pool) bypass leakage. Table 2.15.1-1 will be changed to Table 2.15.1-1a and two new tables (2.15.1-1b and 2.15.1-1c) will be added.

DCD Impact

DCD Tier 1, Section 2.15.1 (as noted on page 2.15-2), Tables 2.15-1a, 2.15.1-1b, 2.15.1-1c and Table 2.15.1-2 will be revised as noted in the attached markup.

(9) The containment system provides the safety-related function of containment isolation for containment boundary integrity.

(10) Containment electrical penetration assemblies, whose maximum available fault current (including failure of upstream devices) is greater than the continuous rating of the penetration, are protected against currents that are greater than the continuous ratings.

(11) The minimum set of displays, alarms and controls, based on the emergency procedure guidelines and important operator actions, is available in the main control room

(12) The amount of chlorine bearing cable insulation exposed to the containment atmosphere is limited.

(13) The DW and WW volumes are adequately sized to accommodate the calculated maximum DW temperature and absolute pressure that are postulated to occur as a result of a design basis accident

(14) The water volume of the wetwell suppression pool is adequately sized to condense the steam that is forced into the wetwell from the drywell due to a postulated pipe break.

(15) Each vacuum breaker isolation valve automatically closes if the vacuum breaker does not fully close when required.

(16) Each vacuum breaker has proximity sensors to detect open/close position. This indication is available in the main control room.

(17) The containment penetration isolation design for each fluid piping system requiring isolation meets the single-failure criterion to ensure completion of penetration isolation.

(18) Drywell to wetwell bypass leakage is less than the assumed value used in the containment capability design basis containment response analysis.

(19) Total drywell to wetwell vacuum breaker bypass pathway leakage is less than the assumed value used in the containment capability design basis containment response analysis.

Inspections, Tests, Analyses and Acceptance Criteria

Table 2.15.1-2 provides a definition of the inspections, tests, and/or analyses, together with associated acceptance criteria for the Containment System.

Table 2.15.1-1a

Containment System Penetrations and Equipment

Equipment Name	ASME Code Section III	Seismic Cat. 1	Remote Manual Operation	Safety-Related	Containment Isolation Signal	Normal Position	Post-Accident Position	Loss of Motive Power Position
Penetration Identification: B21-MPEN-0001 (0002, 0003, 0004)								
Main Steam Line A (B, C, D)								
• F001A (B, C, D) Inboard				~~Yes~~				
• F002A (B, C, D) Outboard	Yes	Yes	Yes	Yes	Yes	Open	Closed	Closed
• F016A (B, C, D) Outboard	Yes	Yes	Yes	Yes	Yes	Open	Closed	As-is
Penetration Identification: B21-MPEN-0005								
Main Steam Line Drains								
• F010 Inboard				~~Yes~~				
• F011 Outboard	Yes	Yes	Yes	Yes	Yes	Open	Closed	Closed
Penetration Identification: B21-MPEN-0006 (0007)								
Feedwater Line A (B)								
• F102A (B) Inboard	Yes	Yes	N/A	Yes	Process Actuated	Open	N/A	N/A
• F101A (B) Outboard	Yes	Yes	Yes	Yes	Yes	Open	Closed	N/A
Penetration Identification: B32-MPEN-0001 (0002, 0003, 0004)								
IC Steam Supply • F001A (B, C, D) Inboard	Yes	Yes	Yes	Yes	Yes	Open	Open (Except on IC pipe or tube failure)	As-is

Table 2.15.1-1b

Containment Mechanical Equipment

Equipment Name (Description)	Equipment Identifier See Figure 2.4.2-1	ASME Code Section III	Seismic Cat. I	RCPB Component	Containment Isolation Valve	Remotely Operated	Loss of Motive Power Position	MCR Alarms
Vacuum Breaker	11(A)	Yes	Yes	No	No	-	-	Yes
Vacuum Breaker Isolation Valve	11.a(A)	Yes	Yes	No	No	Yes	As-is	Yes
Vacuum Breaker	11(B)	Yes	Yes	No	No	-	-	Yes
Vacuum Breaker Isolation Valve	11.a(B)	Yes	Yes	No	No	Yes	As-is	Yes
Vacuum Breaker	11(C)	Yes	Yes	No	No	-	-	Yes
Vacuum Breaker Isolation Valve	11.a(C)	Yes	Yes	No	No	Yes	As-is	Yes
Suppression Pool Stainless Steel Liner	N/A	Yes	Yes	No	No	No	-	-

Note: A dash means not applicable.

Table 2.15.1-1c

Electrical Equipment

Equipment Name (Description)	Equipment Identifier See Figure 2.4.2-1	Control Q-DCIS/ DPS	Seismic Category I	Safety-Related	Safety-Related Display	Active Function	Remotely Operated	Containment Isolation Valve Actuator
Vacuum Breaker	11(A)	-	Yes	Yes	Yes	Open/Close	No	No
Vacuum Breaker Isolation Valve	11(A)	Note 1	Yes	Yes	Yes	Open/Close	Yes	No
Vacuum Breaker	11(B)	-	Yes	Yes	Yes	Open/Close	No	No
Vacuum Breaker Isolation Valve	11(B)	Note 1	Yes	Yes	Yes	Open/Close	Yes	No
Vacuum Breaker	11(C)	-	Yes	Yes	Yes	Open/Close	No	No
Vacuum Breaker Isolation Valve	11(C)	Note 1	Yes	Yes	Yes	Open/Close	Yes	No

Notes:

1. Safety-related control provided by control system independent of Q-DCIS and DPS

Table 2.15.1-2

ITAAC For The Containment System

Design Commitment	Inspections, Tests, Analyses	Acceptance Criteria
18. Drywell to wetwell bypass leakage is less than the assumed value used in the containment capability design basis containment response analysis.	A drywell to wetwell bypass leakage test will be conducted.	Report(s) document that the results of the drywell to wetwell bypass leakage is less than or equal to 50% of the assumed value in the containment capability design basis containment response analysis.
19. Total drywell to wetwell vacuum breaker bypass pathway leakage is less than the assumed value used in the containment capability design basis containment response analysis.	A drywell to wetwell bypass leakage test will be conducted for each vacuum breaker and associated vacuum breaker isolation valve.	Report(s) document that the results of the total drywell to wetwell vacuum breaker bypass pathway leakage is less than or equal to 35% of the assumed value in the containment capability design basis containment response analysis.

NRC RAI 14.3-230

NRC Summary:

Information important for addressing containment debris issue should be included in Tier 1

NRC Full Text:

The staff considered the following in evaluating the effect of loss-of-coolant accident generated and latent debris effects on decay heat removal and containment cooling.

(a) The GDCS pool consists of a stainless steel liner (DCD Tier 2, Revision 4, Table 6.1-1)

(b) The suppression pool consists of a stainless steel liner (DCD Tier 2, Revision 4, Table 6.1-1)

(c) "Suppression pool equalization lines have an intake strainer to prevent the entry of debris material into the system that might be carried into the pool during a large break LOCA." (DCD Tier 2, Revision 4, Section 6.2.2.7.2)

(d) "The GDCS pool airspace opening to the DW will be covered by a perforated steel plate to prevent debris from entering pool and potentially blocking the coolant flow through the fuel." (DCD Tier 2, Revision 4, Section 6.2.2.7.2)

(e) "The Passive Containment Cooling System (PCCS) heat exchanger inlet pipe is provided with a debris filter with holes no greater than 25 mm (1 inch) to prevent entrance of missiles into the pipe and protection from fluid jets during a loss-of-coolant accident (LOCA) condition." (GEH response to NRC RAI 6.3-42, MFN 07-069, January 30, 2007)

Please add these to DCD Tier 1, Table 2.15.3-1 and identify them in DCD Tier 1, Figure 2.15-1.

GEH Response

GEH agrees to revise DCD Tier 1 per NRC request; however, the NRC identified items will be added to the tables and figures for their respective systems. DCD Tier 1 will be revised to add NRC RAI items (a), (c) and (d) to Table 2.4.2-1 and Figure 2.4.2-1, add NRC RAI item (b) to Table 2.15.1-1b and Figure 2.15.1-1, and add NRC RAI item (e) to Table 2.15.4-1 and Figure 2.15.4-1.

DCD Impact

DCD Tier #1, Tables 2.4.2-1, 2.15.1-1b and 2.15.4-1 and Figures 2.4.2-1, 2.15.1-1 and 2.15.4-1 will be revised as noted in the attached markup.

Table 2.4.2-1

GDCS Mechanical Equipment

Equipment Name (Description)	Equipment Identifier See Figure 2.4.2-1	ASME Code Section III	Seismic Cat. I	RCPB Component	Functional Capability Required	Containment Isolation Valve	Remotely Operated	Loss of Motive Power Position	MCR Alarms
GDCS Suppression Pool Equalizing Line from V-5 to RPV inlet nozzle	P-3(D)	Yes	Yes	No	Passive	-	-	-	-
GDCS Deluge Line	P-4(D)	Yes	Yes	No	Passive	-	-	-	-
GDCS Deluge Line Squib Valve	V-7(D)	Yes	Yes	No	Active	No	Yes	As-Is	Yes
GDCS Deluge Line Squib Valve	V-8(D)	Yes	Yes	No	Active	No	Yes	As-Is	Yes
GDCS Deluge Line Squib Valve	V-9(D)	Yes	Yes	No	Active	No	Yes	As-Is	Yes
GDCS Equalization Line Intake Strainer	N/A	Yes	Yes	No	Passive	No	No	-	-
GDCS Pool Perforated Plate	N/A	Yes	Yes	No	Passive	No	No	-	-
GDCS Pool Stainless Steel Liner	N/A	Yes	Yes	No	Passive	No	No	-	-

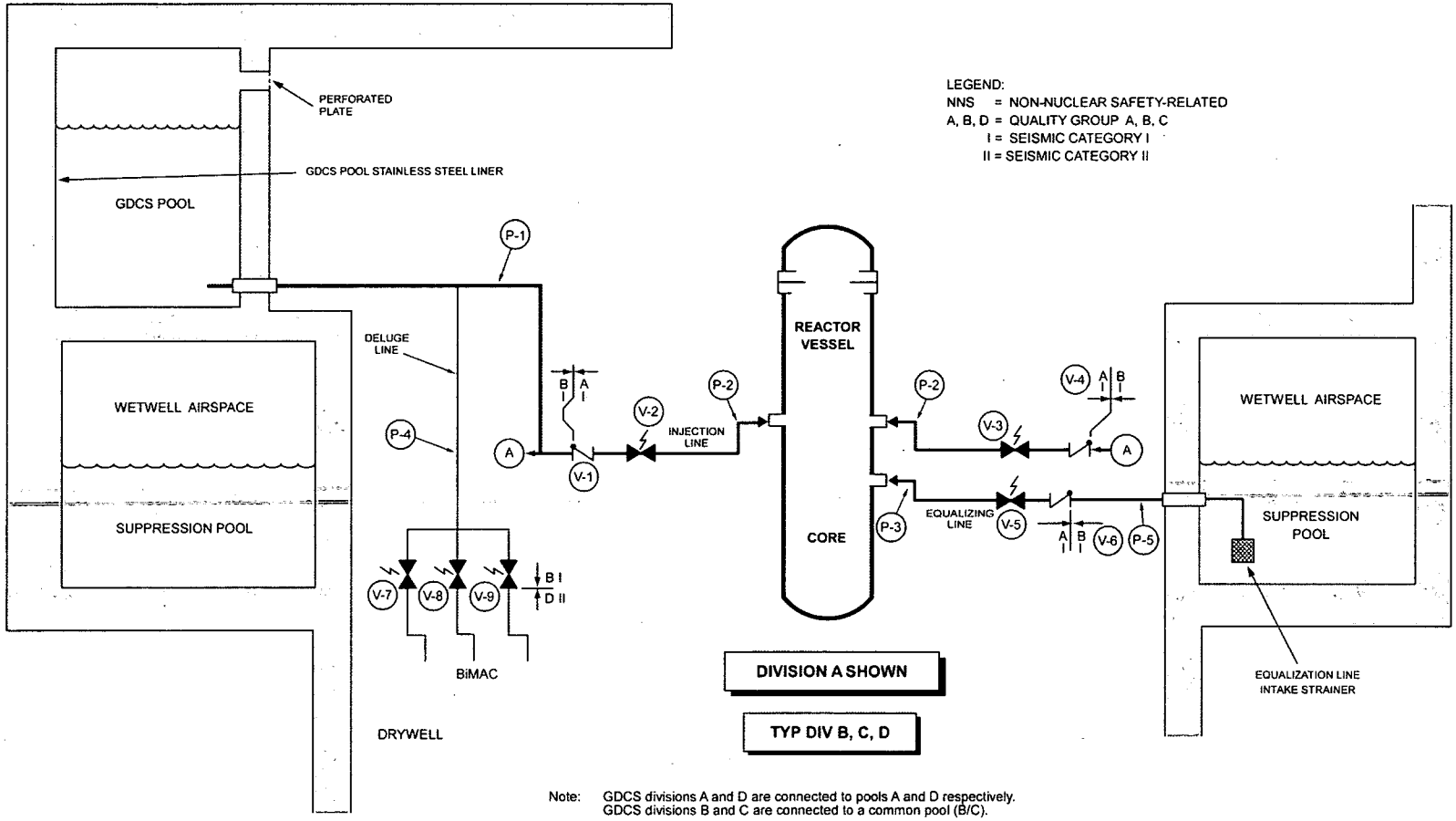

Note: GDCS divisions A and D are connected to pools A and D respectively.
GDCS divisions B and C are connected to a common pool (B/C).

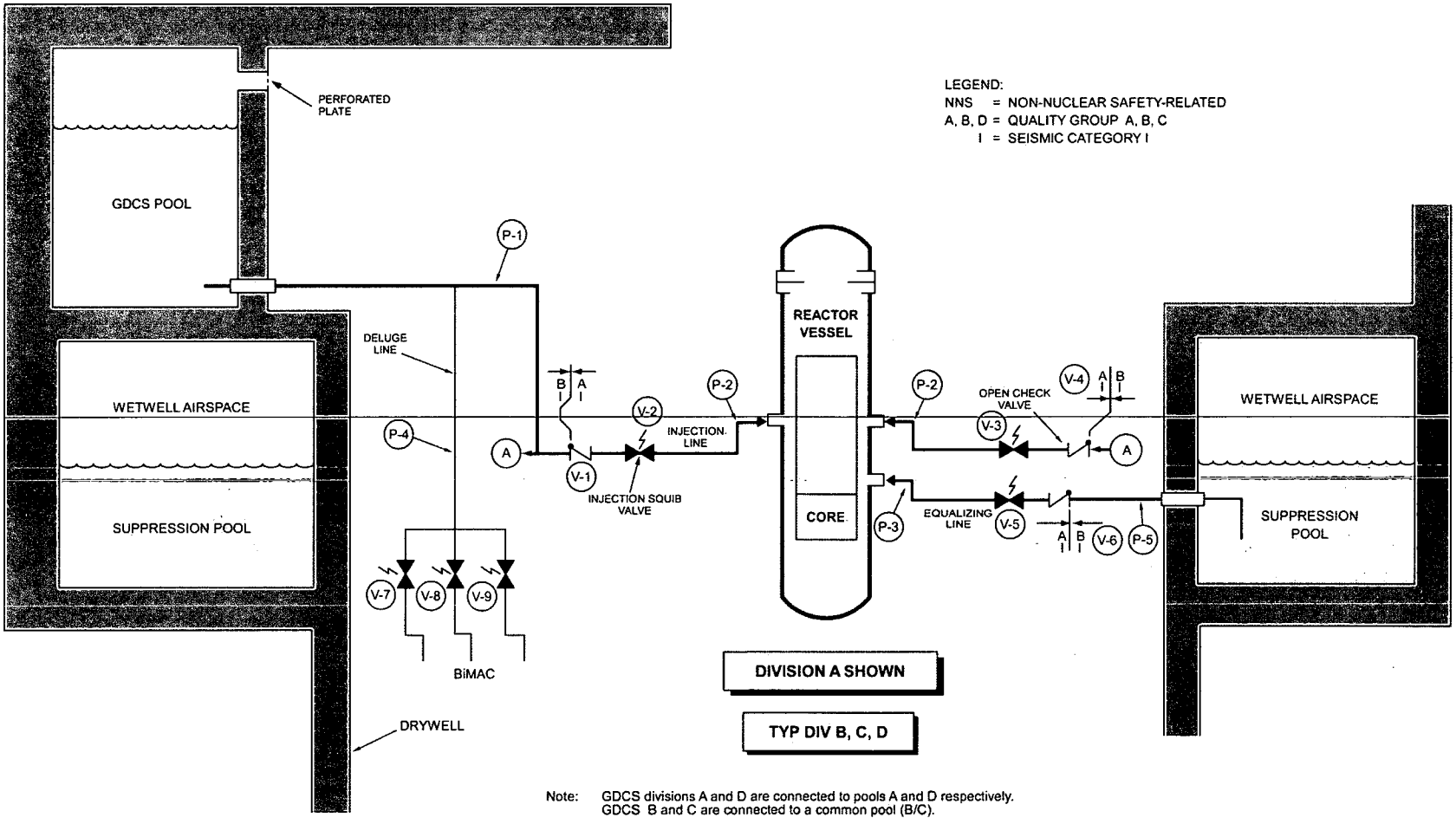

Note: GDCS divisions A and D are connected to pools A and D respectively.
GDCS B and C are connected to a common pool (B/C).

Figure 2.4.2-1. Gravity-Driven Cooling System

Table 2.15.1-1b

Containment Mechanical Equipment

Equipment Name (Description)	Equipment Identifier See Figure 2.4.2-1	ASME Code Section III	Seismic Cat. I	RCPB Component	Containment Isolation Valve	Remotely Operated	Loss of Motive Power Position	MCR Alarms
Vacuum Breaker	11(A)	Yes	Yes	No	No	-	-	Yes
Vacuum Breaker Isolation Valve	11.a(A)	Yes	Yes	No	No	Yes	As-is	Yes
Vacuum Breaker	11(B)	Yes	Yes	No	No	-	-	Yes
Vacuum Breaker Isolation Valve	11.a(B)	Yes	Yes	No	No	Yes	As-is	Yes
Vacuum Breaker	11(C)	Yes	Yes	No	No	-	-	Yes
Vacuum Breaker Isolation Valve	11.a(C)	Yes	Yes	No	No	Yes	As-is	Yes
Suppression Pool Stainless Steel Liner	N/A	Yes	Yes	No	No	No	-	-

Note: A dash means not applicable.

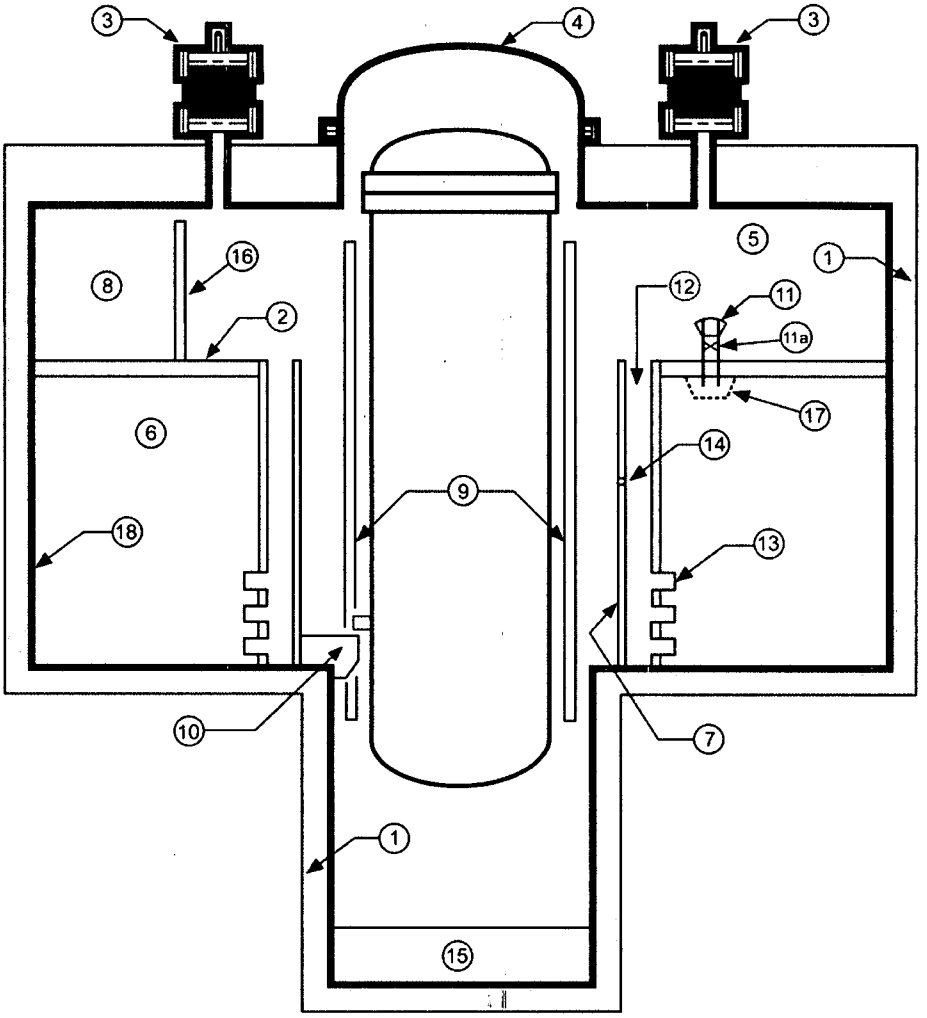

LEGEND

1. Reinforced Concrete Containment Vessel (RCCV)
2. Diaphram Floor Slab
3. (6) Passive Containment Cooling System (PCCS)
4. Drywell Head
5. Drywell
6. Wetwell
7. Vent Wall
8. (3) GDCS Pools
9. Reactor Shield Wall
10. (8) RPV Support Brackets
11. (3) Vacuum Breakers, ≥ 0.6m^2 (6.46 ft^2) Total

11a. (3) Vacuum Breakers, ≥ 0.6m^2 (6.46 ft^2) Total

12. (12) Vertical Vents, ≥ 13.6m^2 (146 ft^2) Total
13. (36) Horizontal Vents, ≥ 0.7m (2.30 ft) I.D.
14. (12) Spillover Holes, 200mm (8 inch) Nominal Diameter, Elevation 12370 mm
15. BiMAC
16. GDCS Pool Wall (Typical)
17. Protective Shield/Debris Screen
18. Suppression Pool Stainless Steel Liner

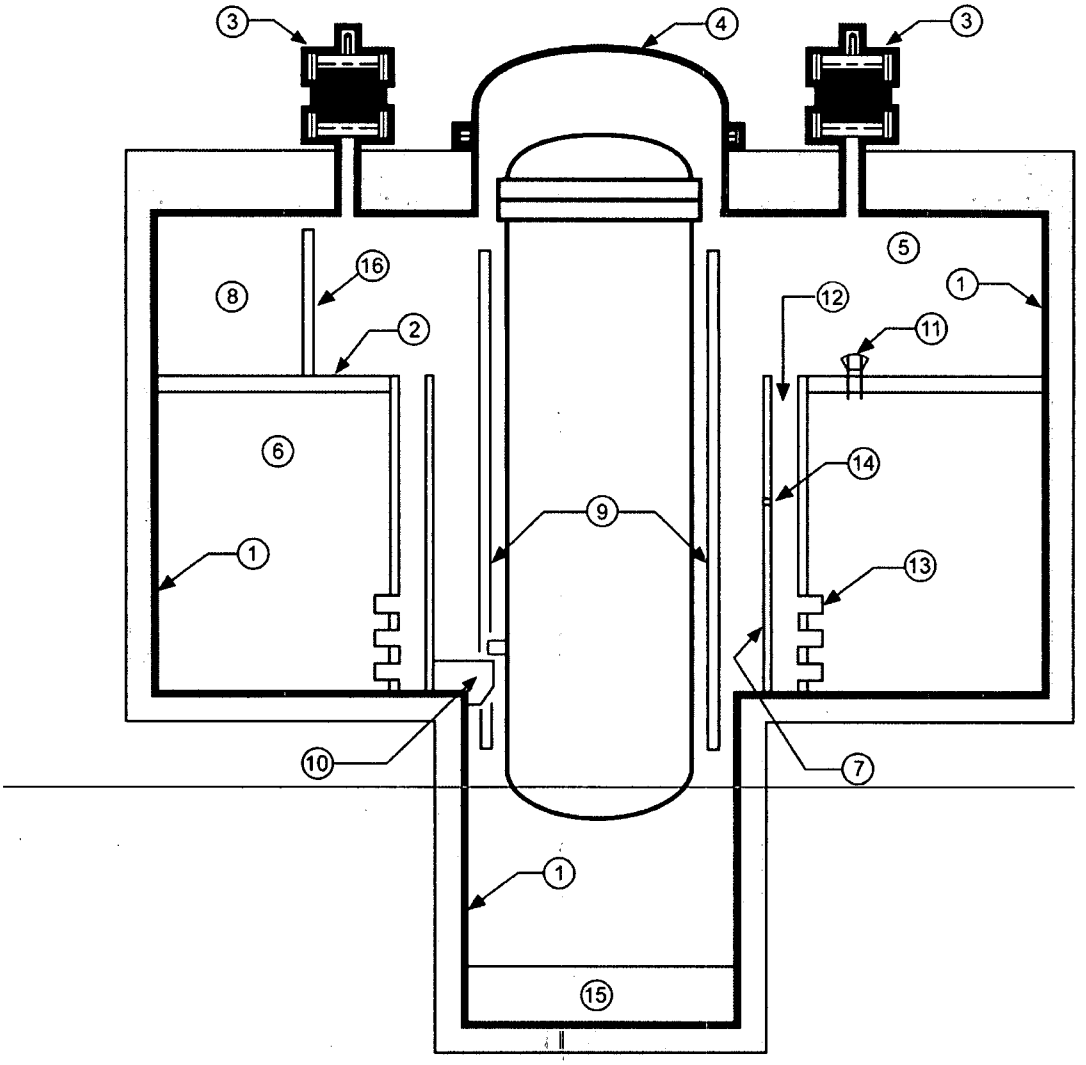

LEGEND

1. Containment Vessel (RCCV)
2. Diaphram Floor Slab
3. Passive Containment Cooling System (PCCS), Total 6
4. Drywell Head
5. Drywell
6. Wetwell
7. Vent Wall
8. GDCS Pools, Total 3
9. Reactor Shield Wall
10. RPV Support Bracket (Typical 8)
11. Vacuum Breaker, Total 3
12. Vertical Vents, ≥ 13.6m^2 (146 ft^2) Total
13. Horizontal Vent, ≥ 0.7m (2.30 ft) I.D., 36 Total
14. Spillover Hole, 200mm (8 inch) Nominal Diameter, 12 Total
15. BiMAC
16. GDCS Pool Wall (Typical)

Figure 2.15.1-1. Containment System

Table 2.15.4-1

Passive Containment Cooling System Mechanical Equipment

Equipment Name (Description)	Equipment Identifier see Figure 2.15.4-1	ASME Code Section III	Seismic Cat. I	RCPB Component	Functional Capability Required	Containment Isolation Valve	Remotely Operated Valve	Loss of Motive Power Position	Functional Capability Required
PCC Heat Condenser	PCC Condenser	Yes	Yes	No	Passive	-	-	-	Yes
PCC Inlet Line	P-1(A[1])	Yes	Yes	No	Passive	-	-	-	Yes
Condensate Drain Line	P-2(A[1])	Yes	Yes	No	Passive	-	-	-	Yes
Vent Fan Check Valve	Check Valve	Yes	No	No	Active	-	-	-	Yes
Non-Condensables Vent Line	P-3(A[1])	Yes	Yes	No	Passive	-	-	-	Yes
Vent Fan	Vent Fan	Yes	No	No	Active	-	-	-	Only after 72 hours
Non-Condensables Vent Line Sparger	Sparger	Yes	Yes	No	Passive	-	-	-	Yes
PCCS Inlet Pipe Debris Filter	N/A	Yes	Yes	No	Passive	-	-	-	Yes
PCCS Vent Fan Line	P-4 (A[1])	Yes	No	No	Passive	-	-	-	Yes

Note: A dash means not applicable.

[1] Train A; Typical for Trains B, C, D, E & F.

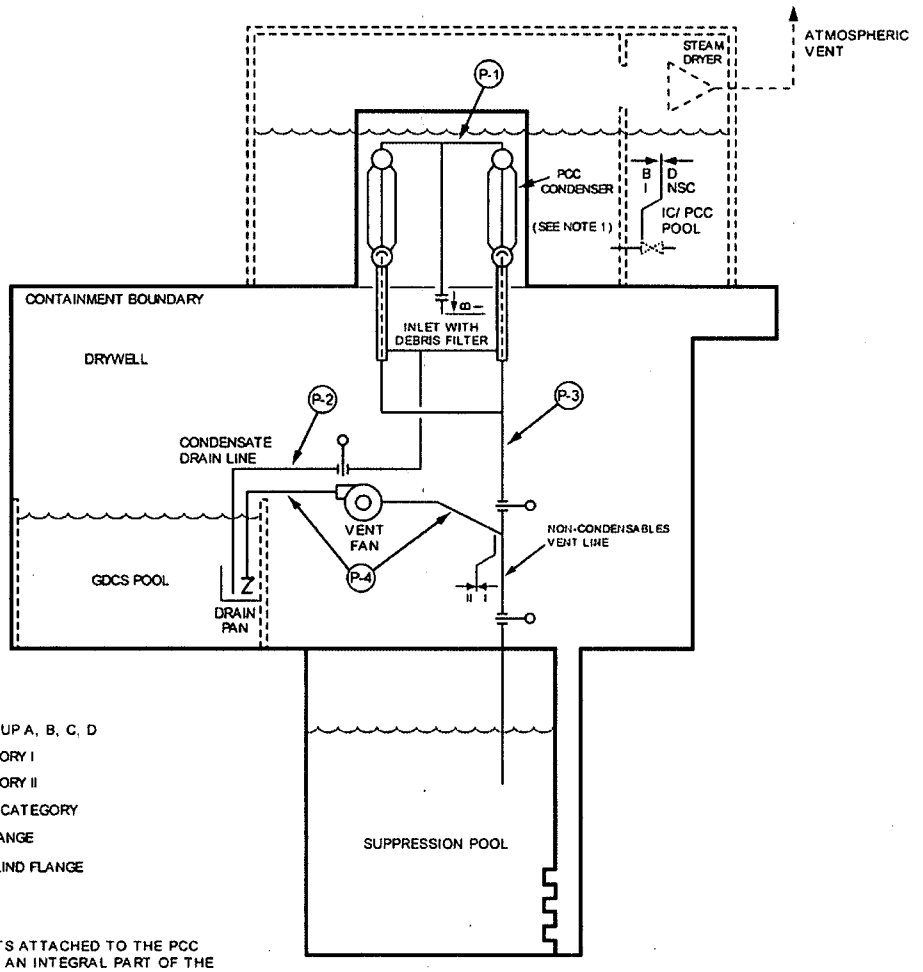

LEGEND:

A, B, C, D = QUALITY GROUP A, B, C, D
I = SEISMIC CATEGORY I
II = SEISMIC CATEGORY II
NSC = NON-SEISMIC CATEGORY
= SPECTACLE FLANGE
= REMOVABLE BLIND FLANGE
= CHECK VALVE

NOTE 1: THE COMPONENTS ATTACHED TO THE PCC CONDENSER ARE AN INTEGRAL PART OF THE CONTAINMENT BOUNDARY ABOVE THE DRYWELL.

TRAIN A SHOWN

TYPICAL OF TRAIN B, C, D, E & F

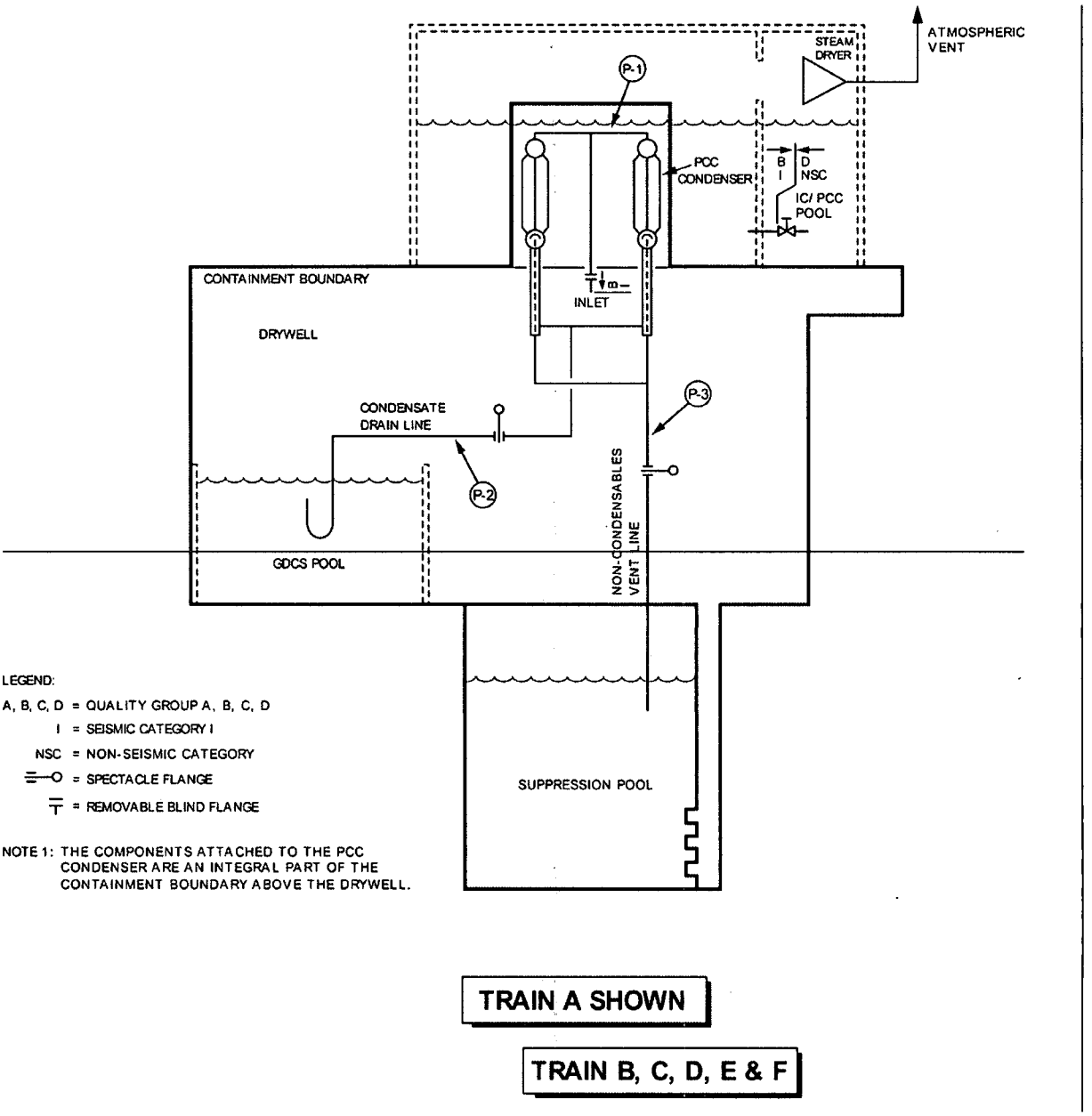

Figure 2.15.4-1. Passive Containment Cooling System Schematic

NRC RAI 14.3-238

NRC Summary:

PCCS design parameters should to be verified

NRC Full Text:

DCD Tier 2, Revision 4, Table 6.2-10 gives PCCS design parameters. Please explain how the ITAAC in DCD Tier 1, Revision 4, Table 2.15.4-2 demonstrates that:

(a) The heat removal capacity for each loops is 11 MWt nominal for pure saturated steam at a pressure of 308 kPa (absolute) (45 psia) and temperature of 134 °C (273.2 °F) condensing inside tubes with an outside pool water temperature of 102 °C

(b) The system design temperature is 171°C (340°F).

GEH Response

GEH provides the following response to the two issues identified by the NRC staff:

a. Both the ITA and the AC in DCD Tier 1, Table 2.15.4-2, Item 7, will be revised to include requirements that clearly demonstrate and confirm the capacity of the PCC condensers and design basis assumptions.

b ITAACs associated with design and construction of system piping and components (e.g., Table 2.15.4-2, Items 2a and 2b) demonstrate that the system is designed and constructed to meet its design requirements, including system design temperature. ASME code design reports will provide appropriate confirmation of compliance with the design temperature. GEH also notes that Tier 2, Section 14.3 of the DCD, describes the process for identification of ITAAC items. The focus of the ITAAC development process is intended to be on numeric performance values, in lieu of numeric design values.

DCD Impact

DCD Tier 1, Table 2.15.4-2, Item 7, will be revised as noted in the attached markup.

Table 2.15.4-2

ITAAC For The Passive Containment Cooling System

Design Commitment	Inspections, Tests, Analyses	Acceptance Criteria
b. Each of the lines identified in Table 2.15.4-1 for which functional capability is required is designed to withstand combined normal and seismic design basis loads without a loss of its functional capability.	Inspection will be performed for the existence of a report verifying that the as-built piping meets the requirements for functional capability.	Report(s) document that a report exists and concludes that each of the as-built lines identified in Table 2.15.4-1 for which functional capability is required meets the requirements for functional capability.
6. Each mechanical train of the PCCS (A, B, C, D, E & F)* is physically separated from the other trains. *As indicated on Figure 2.15.4-1. Physical separation is not required in the Primary Containment.	Inspections of the as-built PCCS will be performed.	Report(s) document that the each mechanical train of the PCCS is physically separated from other mechanical trains of the system by structural and/or fire barriers (with the exception of portions in Primary Containment).
7. The PCCS together with the pressure suppression containment system will limit containment pressure to less than its design pressure for 72 hours after a LOCA.	Using prototype test data and as-built PCC unit information, an analysis will be performed to establish the heat removal capability of the PCC unit.~~An analysis will be performed using similar or more conservative performance characteristics than those of a test unit of established performance capability.~~	Test(s) and analysis(es) reports exist and ~~document~~conclude that analyzed containment pressure for 72 hours after a LOCA is less than containment design pressure, and that the PCC unit heat removal capacity is no less than 11 MWt given the following conditions: • Pure saturated steam in the tubes at 308 kPa (44.7 psi) absolute and 134°C (273°F) • IC/PCC pool water temperature is at atmospheric pressure and 102°C (216°F).~~Analyzed containment~~

Table 2.15.4-2

ITAAC For The Passive Containment Cooling System

Design Commitment	Inspections, Tests, Analyses	Acceptance Criteria
		~~pressure for 72 hours after a LOCA is less than containment design pressure.~~
8. The equipment qualification of PCCS components is addressed in Tier 1 Section 3.8.	See Tier 1 Section 3.8.	See Tier 1 Section 3.8.
9. The elevation of the PCCS vent discharge point is submerged in the suppression pool at an elevation below low water level and above the uppermost horizontal vent.	A visual inspection will be performed of the PCCS vent discharge point relative to the horizontal vents.	The elevation of the discharge on the PCCS vent line is > 0.85 m (33.5 in) and < 0.90 m (35.4 in) above the top of the uppermost horizontal vent.
10. The PCCS will be designed to limit the fraction of containment leakage through the condensers to an acceptable value.	A pneumatic leakage test of the PCCS will be conducted.	Test report(s) and analysis document that the combined leakage from each of the PCCS heat exchangers is $\leq 0.025L_a$
11. The PCCS vent fans flow rate is sufficient to meet the beyond 72 hours containment cooling requirements.	Flow rate will be measured.	Test and Analyses show that the PCC vent fans can provide a flow rate of 0.271 m^3/s (575 CFM) under the following conditions: • Average pressure 43.8 psi (302 KPa) • Average density 0.14 lbs/ft^3 (2.2 Kg/m^3) • Head across fan 0.74 psi (5116 Pa)

NRC RAI 14.3-385

NRC Summary:

Test unit of established performance capability

NRC Full Text:

For ITAAC Table 2.15.4-2 Item 7, the staff requests that the applicant provide clarification for the terminology used in the ITA "similar or more conservative performance characteristic than those of a test unit of established performance capability". In addition, the staff suggests use of the phrase "A report exists and concludes that the...." in the AC.

GEH Response

GEH agrees to implement the changes proposed by the NRC. DCD Tier 1, Table 2.15.4-2 will be revised to remove the quoted phrase and clarify the ITAAC in Table 2.15.4-2, Item 7, which confirms the capacity of the PCC condensers.

DCD Impact

DCD Tier 1, Table 2.15.4-2, will be revised as noted in the markups that are attached to the response to RAI 14.3-238, which is enclosed within this same letter; please refer to the GEH response to RAI 14.3-238.