Catawba Nuclear Station
2007 NRC Exam
Reactor Operator

Question 38

Bank Question: 07-38 ***Answer: B***

---

1 Pt(s). Two banks of PZR heaters are required by TS. What type of load center supplies power to these banks?

A. Unit Essential

B. Unit Blackout

C. Shared Blackout

D. Unit Motor Control Center

Distracter Analysis:

A. **Incorrect:**
Plausible: This is the normal power for TS required items.

B. **Correct:**

C. **Incorrect:**
Plausible: This is the power supply for a portion of the VI system which is also required for a B/O

D. **Incorrect**:
Plausible: This is the supply for the non-TS heaters.

Level: RO

K/A: 010 Pressurizer Pressure Control System (PZR PCS) K2 Knowledge of bus power supplies to the following: (CFR: 41.7) K2.01 PZR heaters . . . 3.0 3.4

Lesson Plan Objective: IPE06 List the power sources (electrical and pneumatic) for the pressurizer pressure control devices

Source: NEW

Level of knowledge: Memory

References:
1. IPE and EPB Lessons
2.

3. The Pressurizer itself must be Operable with:

   a) A Water Level less than or equal to 92%. This ensures a bubble exists which preserves the steam space needed for adequate pressure control.

   b) Two (2) groups of Heaters each with a capacity greater than or equal to 150 kW and capable of being powered from an Emergency Power Supply. These are Heaters Groups A and B. Only these two Groups can be powered from a D/G as LXI and LXH are powered from FTA and FTB which can be powered from ETA and ETB during a Station Blackout. Groups C and D are powered from LXC and LXD.

   NOTE: The availability of FTA (B) from ETA (B) affects the operability of A and B Heater groups.

F. Spray Valve Control (**OBJ. #2**)

1. Controller

   a) Air pressure positions spray valves for desired flow

   b) Valves fail closed on loss of air.

2. Spray Valves

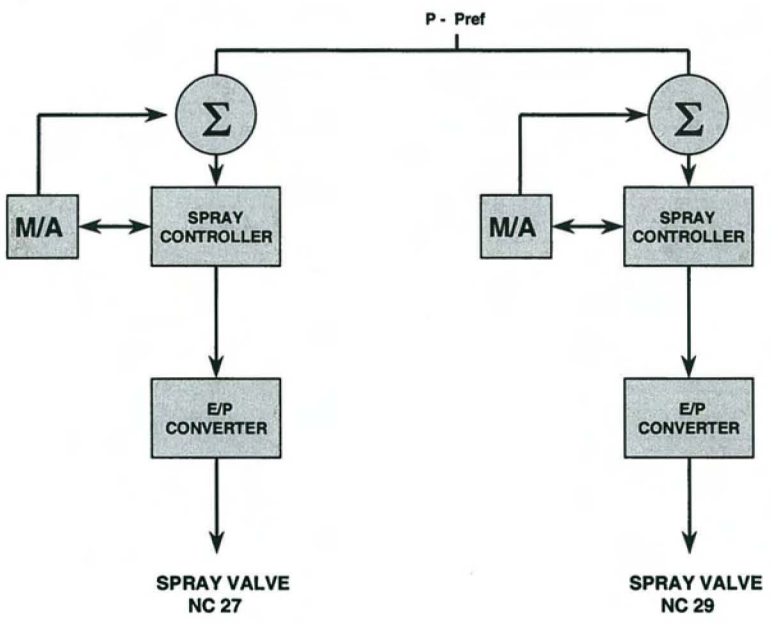

   a) Automatic

      1) Fully closed 25 psig greater than P_{ref} (2260)

      2) Fully open 75 psig greater than P_{ref} (2310)

Catawba Nuclear Station
2007 NRC Exam
Reactor Operator

Question 39

Bank Question: 07-39 ***Answer: A***

---

1 Pt(s). Given the following conditions:

- The reactor has just tripped
- Prior to the trip, reactor power was at 30% with all systems in their normal lineup
- PZR pressure channel 3 had previously failed low and all required AP/1/A/5500/011 (Pressurizer Pressure Anomalies) actions for the failed channel have been completed.
- Investigation showed a Reactor Protection System bistable failure (actuation) precipitated the Reactor trip.

Which of the following bistable failures would have caused the reactor trip?

A. Channel 1 NC Loop A OTDT Rx Trip

B. Channel 2 Pressurizer Hi Level

C. Channel 3 P/R Hi Flux Hi Stpt N43

D. Channel 4 NC Loop A OPDT Rx Trip

Distracter Analysis:
For a PZR Pressure channel the following bistables are placed in the trip condition:

- Pzr low pressure S/I
- OT Delta T
- Pzr high pressure Reactor Trip
- Pzr low pressure Reactor Trip.

The reactor would trip if any one of these bistables tripped on another channel (i.e. channel 3 OTDT is tripped in the stem and channel 1,2 or 4 OTDT comes in).

A. **Correct:** OTDT inputs are Tave, PZR pressure and AFD

B. **Incorrect:**
Plausible: Pressurizer Hi Level Reactor trip is a 2 out of 3 logic and this bistable failing would not cause a Rx Trip when combined with the Pzr Pressure Ch 3 failure. It is plausible because this is a 2nd and different (not Ch 3) channel failure of pressurizer instrumentation.

C. **Incorrect:**
Plausible: Since the failure of a P/R would have no effect on Channel 3 OTDT (it is already in trip) this failure would have no impact.

D. **Incorrect**:
Plausible: OPDT inputs are Tave, the rate of change of Tave and AFD. This bistable would have no impact on reactor trip.

Catawba Nuclear Station
2007 NRC Exam
Reactor Operator

Question 39

Level: RO

K/A: SYSTEM: 012 Reactor Protection System (RPS) K6 Knowledge of the effect of a loss or malfunction of the following will have on the RPS: (CFR: 41.7 / 45/7) K6.01 Bistables and bistable test equipment 2.8 3.3

Lesson Plan Objective: IPX04 List the logic and interlocks associated with each reactor trip.

Source: BANK (Ginna 2004)

Level of knowledge: comprehension

References:
1.
2.

ACTION/EXPECTED RESPONSE	RESPONSE NOT OBTAINED

NOTE Positive reactivity is inserted during an increase in NC pressure which may cause auto rod insertion.

__ 6. **Verify NC pressure - STABLE OR INCREASING.**	__ **IF pressure continues to decrease, THEN REFER TO AP/1/A/5500/010 (Reactor Coolant Leak).**

7. **WHEN NC pressure is stable, THEN:**

   __ • Stabilize unit at appropriate power level.

   • Adjust the following as required to maintain T-Avg within 1°F of T-Ref:

   __ • Turbine load
   __ • Control rods
   __ • Boron concentration.

8. **IF a Pzr pressure channel failed high, THEN notify IAE to fail the following bistables for the affected channel under Model W/O #91002943. Bistables shall be tripped within six (6) hours:**

   __ • Pzr low pressure S/I
   __ • OT Delta T
   __ • Pzr high pressure Reactor Trip
   __ • Pzr low pressure Reactor Trip.

Catawba Nuclear Station
2007 NRC Exam
Reactor Operator

Question 40

Bank Question: 07-40 ***Answer: B***

---

1 Pt(s). Containment Pressure Channel 3 has failed. All TS required actions are complete.

How many channels of containment pressure are now required to actuate an SI and a Sp?

	SI	Sp
A	1	1
B	1	2
C	2	1
D	2	2

Distracter Analysis:

A. **Incorrect**:
Plausible: SI is correct. Sp bistables are placed in the bypass position per TS to preclude an inadvertent NS actuation therefore the coincidence becomes 2/3.

B. **Correct:**

C. **Incorrect:**
Plausible: SI requires 2/3 normally. With one channel in the trip condition the coincidence becomes ½. Sp bistables are placed in the bypass position per TS to preclude an inadvertent NS actuation therefore the coincidence becomes 2/3.

D. **Incorrect:**
Plausible: SI requires 2/3 normally. With one channel in the trip condition the coincidence becomes ½. SP is correct.

Level: RO

K/A: SYSTEM: 013 Engineered Safety Features Actuation System (ESFAS) K6 Knowledge of the effect of a loss or malfunction on the following will have on the ESFAS: (CFR: 41.7 / 45.5 to 45.8) K6.01 Sensors and detectors. . . . 2.7* 3.1*

Lesson Plan Objective: ISE04 List all the Engineered Safeguards Signals with their setpoints, logic and interlocks.

Source: NEW

Catawba Nuclear Station
2007 NRC Exam
Reactor Operator

Question 40
Level of knowledge: memory

References:
1. ISE lesson, TS 3.3.2
2.

Containment Pressure SI Logic

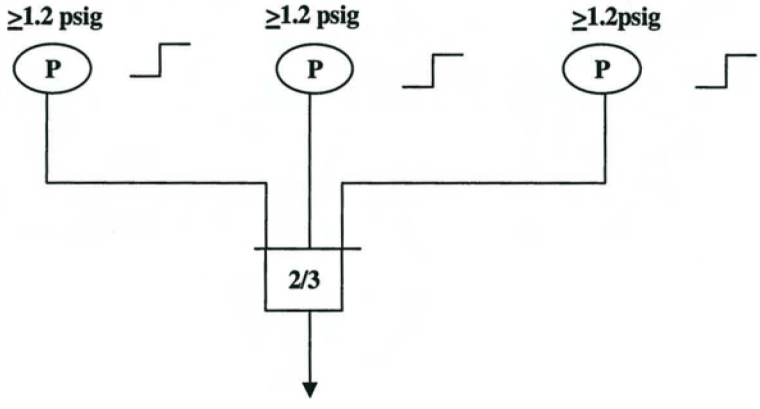

AUTO SI LOGIC

b) High Containment Pressure

1) 2/3 Containment Pressure greater than or equal to 1.2 psig

2) Annunciator on AD13 (1 out of 3)

3) Cannot be blocked.

(Sp) Phase B Isolation

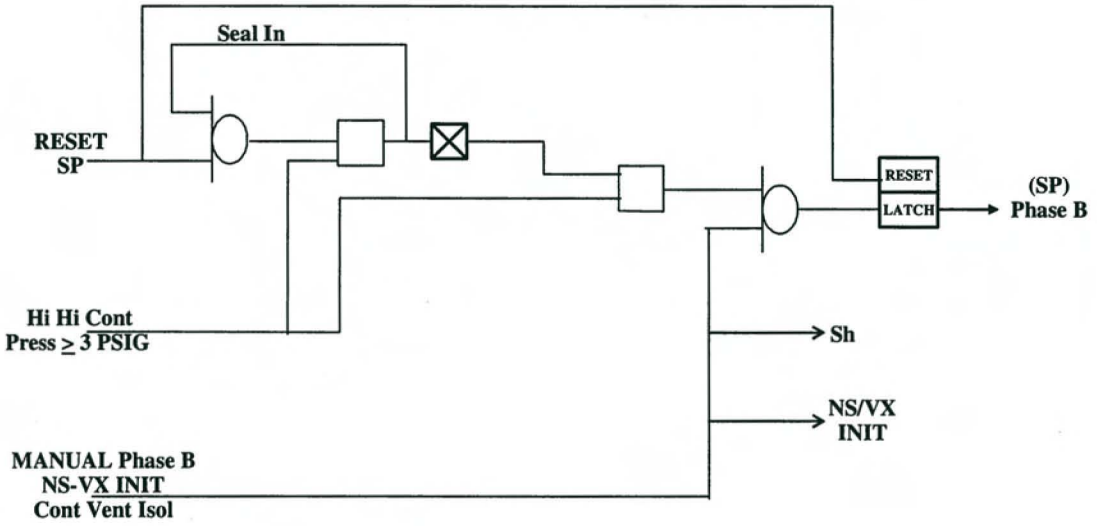

C. Phase B Isolation (S_p)

1. 2 signals can actuate an S_p
   a) Manual: One pushbutton per train under Plexiglas cover on MC11 (Phase B, NS-VX Initiate, Cont Vent Isol Button)
   b) Hi-Hi Containment Pressure: 2/4 Containment Pressure Channels greater than or equal to 3.0 psig. An annunciator (AD-13) signals Control Room on HI HI Containment Pressure on any one channel.
      1) The "Phase B, NS-VX Init and Cont Vent Isol" Button, when depressed, will initiate all three functions.
2. Reset (Phase B Reset Button)
   a) Allows manual control of S_p valves.
   b) One pushbutton for each train (NS board)
   c) Functional with any pressure in Containment.
3. Phase B Isolation indication: annunciator on AD13.
4. Phase B Isolation, completes the isolation of non-essential Containment penetrations including KC to the NCP's.

3.3 INSTRUMENTATION

3.3.2 Engineered Safety Feature Actuation System (ESFAS) Instrumentation

LCO 3.3.2 The ESFAS instrumentation for each Function in Table 3.3.2-1 shall be OPERABLE.

APPLICABILITY: According to Table 3.3.2-1.

ACTIONS

----------NOTE----------
Separate Condition entry is allowed for each Function.

CONDITION	REQUIRED ACTION	COMPLETION TIME
A. One or more Functions with one or more required channels or trains inoperable.	A.1 Enter the Condition referenced in Table 3.3.2-1 for the channel(s) or train(s).	Immediately
B. One channel or train inoperable.	B.1 Restore channel or train to OPERABLE status.	48 hours
	OR	
	B.2.1 Be in MODE 3.	54 hours
	AND	
	B.2.2 Be in MODE 5.	84 hours

(continued)

ACTIONS (continued)

CONDITION	REQUIRED ACTION	COMPLETION TIME
C. One train inoperable.	C.1 ----------NOTE---------- One train may be bypassed for up to 4 hours for surveillance testing provided the other train is OPERABLE. ----------	
	Restore train to OPERABLE status.	6 hours
	OR	
	C.2.1 Be in MODE 3.	12 hours
	AND	
	C.2.2 Be in MODE 5.	42 hours
D. One channel inoperable.	D.1 ----------NOTE---------- The inoperable channel may be bypassed for up to 4 hours for surveillance testing of other channels. ----------	
	Place channel in trip.	6 hours
	OR	
	D.2.1 Be in MODE 3.	12 hours
	AND	
	D.2.2 Be in MODE 4.	18 hours

(continued)

ACTIONS (continued)

CONDITION	REQUIRED ACTION	COMPLETION TIME
E. One Containment Pressure channel inoperable.	E.1 ----------NOTE---------- One additional channel may be bypassed for up to 4 hours for surveillance testing. ----------	
	Place channel in bypass.	6 hours
	OR	
	E.2.1 Be in MODE 3.	12 hours
	AND	
	E.2.2 Be in MODE 4.	18 hours
F. One channel or train inoperable.	F.1 Restore channel or train to OPERABLE status.	48 hours
	OR	
	F.2.1 Be in MODE 3.	54 hours
	AND	
	F.2.2 Be in MODE 4.	60 hours
G. One Steam Line Isolation Manual Initiation - individual channel inoperable.	G.1 Restore channel to OPERABLE status.	48 hours
	OR	
	G.2 Declare associated steam line isolation valve inoperable.	48 hours

(continued)

ACTIONS (continued)

CONDITION	REQUIRED ACTION	COMPLETION TIME
H. One train inoperable.	H.1 ----------NOTE---------- One train may be bypassed for up to 4 hours for surveillance testing provided the other train is OPERABLE. ---------- Restore train to OPERABLE status.	6 hours
	OR	
	H.2.1 Be in MODE 3.	12 hours
	AND	
	H.2.2 Be in MODE 4.	18 hours
I. One train inoperable.	I.1 ----------NOTE---------- One train may be bypassed for up to 4 hours for surveillance testing provided the other train is OPERABLE. ---------- Restore train to OPERABLE status.	6 hours
	OR	
	I.2 Be in MODE 3.	12 hours

(continued)

ACTIONS (continued)

CONDITION	REQUIRED ACTION	COMPLETION TIME
J. One channel inoperable.	J.1 ----------NOTE---------- The inoperable channel may be bypassed for up to 4 hours for surveillance testing of other channels. ---------- Place channel in trip.	6 hours
	OR	
	J.2 Be in MODE 3.	12 hours
K. One Main Feedwater Pumps trip channel inoperable.	K.1 Place channel in trip.	1 hour
	OR	
	K.2 Be in MODE 3.	7 hours
L. One channel inoperable.	L.1 ----------NOTE---------- One channel may be bypassed for up to 2 hours for surveillance testing provided the other channel is OPERABLE. ---------- Be in MODE 3.	6 hours

(continued)

ACTIONS (continued)

CONDITION	REQUIRED ACTION	COMPLETION TIME
M. One channel inoperable.	M.1 Place channel in trip.	1 hour
	OR	
	M.2.1 Be in MODE 3.	7 hours
	AND	
	M.2.2 Be in MODE 4.	13 hours
N. One channel inoperable.	N.1 ----------NOTE---------- One additional channel may be bypassed for up to 2 hours for surveillance testing. ----------	
	Place channel in bypass.	6 hours
	OR	
	N.2.1 Be in MODE 3.	12 hours
	AND	
	N.2.2 Be in MODE 5.	42 hours

(continued)

ACTIONS (continued)

CONDITION	REQUIRED ACTION	COMPLETION TIME
O. One channel inoperable.	O.1 Verify interlock is in required state for existing unit condition.	1 hour
	OR	
	O.2.1 Be in MODE 3.	7 hours
	AND	
	O.2.2 Be in MODE 4.	13 hours
P. One or more Containment Pressure Control System channel(s) inoperable.	P.1 Declare affected supported system inoperable.	Immediately
Q. One Nuclear Service Water Suction Transfer-Low Pit Level channel in one or more pits inoperable.	Q.1 ----------NOTE---------- The inoperable channel may be bypassed for up to 2 hours for surveillance testing of other channels. ---------- Place channel in trip.	4 hours
	OR	
	Q.2 Align the Nuclear Service Water System for Standby Nuclear Service Water Pond recirculation.	4 hours
	OR	
	Q.3.1 Be in MODE 3.	10 hours
	AND	
	Q.3.2 Be in MODE 5.	40 hours

(continued)

ACTIONS (continued)

CONDITION	REQUIRED ACTION	COMPLETION TIME
R. Two or more Nuclear Service Water Suction Transfer-Low Pit Level channels in one or more pits inoperable.	R.1 Align the Nuclear Service Water System for Standby Nuclear Service Water Pond recirculation.	4 hours
	OR	
	R.2.1 Be in MODE 3.	10 hours
	AND	
	R.2.2 Be in MODE 5.	40 hours

SURVEILLANCE REQUIREMENTS

----------NOTE----------
Refer to Table 3.3.2-1 to determine which SRs apply for each ESFAS Function.

SURVEILLANCE		FREQUENCY
SR 3.3.2.1	Perform CHANNEL CHECK.	12 hours
SR 3.3.2.2	Perform ACTUATION LOGIC TEST.	31 days on a STAGGERED TEST BASIS
SR 3.3.2.3	----------NOTE---------- Final actuation of pumps or valves not required. ---------- Perform TADOT.	31 days
SR 3.3.2.4	Perform MASTER RELAY TEST.	31 days on a STAGGERED TEST BASIS
SR 3.3.2.5	Perform COT.	92 days
SR 3.3.2.6	Perform SLAVE RELAY TEST.	92 days <u>OR</u> 18 months for only Westinghouse AR and Potter & Brumfield MDR relay types
SR 3.3.2.7	Perform COT.	31 days

(continued)

SURVEILLANCE		FREQUENCY
SR 3.3.2.8	----------NOTE---------- Verification of setpoint not required for manual initiation functions. ---------- Perform TADOT.	18 months
SR 3.3.2.9	----------NOTE---------- This Surveillance shall include verification that the time constants are adjusted to the prescribed values. ---------- Perform CHANNEL CALIBRATION.	18 months
SR 3.3.2.10	----------NOTE---------- Not required to be performed for the turbine driven AFW pump until 24 hours after SG pressure is ≥ 600 psig. ---------- Verify ESFAS RESPONSE TIMES are within limit.	18 months on a STAGGERED TEST BASIS
SR 3.3.2.11	Perform COT.	18 months
SR 3.3.2.12	Perform ACTUATION LOGIC TEST.	18 months

Table 3.3.2-1 (page 1 of 5)
Engineered Safety Feature Actuation System Instrumentation

FUNCTION	APPLICABLE MODES OR OTHER SPECIFIED CONDITIONS	REQUIRED CHANNELS	CONDITIONS	SURVEILLANCE REQUIREMENTS	ALLOWABLE VALUE	NOMINAL TRIP SETPOINT
1. Safety Injection[b]						
a. Manual initiation	1,2,3,4	2	B	SR 3.3.2.8	NA	NA
b. Automatic Actuation Logic and Actuation Relays	1,2,3,4	2 trains	C	SR 3.3.2.2 SR 3.3.2.4 SR 3.3.2.6	NA	NA
c. Containment Pressure - High	1,2,3	3	D	SR 3.3.2.1 SR 3.3.2.5 SR 3.3.2.9 SR 3.3.2.10	≤ 1.4 psig	1.2 psig
d. Pressurizer Pressure - Low	1,2,3[a]	4	D	SR 3.3.2.1 SR 3.3.2.5 SR 3.3.2.9 SR 3.3.2.10	≥ 1839 psig	1845 psig
2. Containment Spray						
a. Manual Initiation	1,2,3,4	1 per train, 2 trains	B	SR 3.3.2.8	NA	NA
b. Automatic Actuation Logic and Actuation Relays	1,2,3,4	2 trains	C	SR 3.3.2.2 SR 3.3.2.4 SR 3.3.2.6	NA	NA
c. Containment Pressure - High High	1,2,3	4	E	SR 3.3.2.1 SR 3.3.2.5 SR 3.3.2.9 SR 3.3.2.10	≤ 3.2 psig	3.0 psig
3. Containment Isolation[b]						
a. Phase A Isolation						
(1) Manual Initiation	1,2,3,4	2	B	SR 3.3.2.8	NA	NA
(2) Automatic Actuation Logic and Actuation Relays	1,2,3,4	2 trains	C	SR 3.3.2.2 SR 3.3.2.4 SR 3.3.2.6	NA	NA
(3) Safety Injection	Refer to Function 1 (Safety Injection) for all initiation functions and requirements.					

(continued)

(a) Above the P-11 (Pressurizer Pressure) interlock.

(b) The requirements of this Function are not applicable to Containment Purge Ventilation System and Hydrogen Purge System components, since the system containment isolation valves are sealed closed in MODES 1, 2, 3, and 4.

Table 3.3.2-1 (page 2 of 5)
Engineered Safety Feature Actuation System Instrumentation

FUNCTION	APPLICABLE MODES OR OTHER SPECIFIED CONDITIONS	REQUIRED CHANNELS	CONDITIONS	SURVEILLANCE REQUIREMENTS	ALLOWABLE VALUE	NOMINAL TRIP SETPOINT
3. Containment Isolation (continued)						
b. Phase B Isolation						
(1) Manual Initiation	1,2,3,4	1 per train, 2 trains	B	SR 3.3.2.8	NA	NA
(2) Automatic Actuation Logic and Actuation Relays	1,2,3,4	2 trains	C	SR 3.3.2.2 SR 3.3.2.4 SR 3.3.2.6	NA	NA
(3) Containment Pressure - High High	1,2,3	4	E	SR 3.3.2.1 SR 3.3.2.5 SR 3.3.2.9 SR 3.3.2.10	≤ 3.2 psig	3.0 psig
4. Steam Line Isolation						
a. Manual Initiation						
(1) System	1,2[b],3[b]	2 trains	F	SR 3.3.2.8	NA	NA
(2) Individual	1,2[b],3[b]	1 per line	G	SR 3.3.2.8	NA	NA
b. Automatic Actuation Logic and Actuation Relays	1,2[b],3[b]	2 trains	H	SR 3.3.2.2 SR 3.3.2.4 SR 3.3.2.6	NA	NA
c. Containment Pressure - High High	1,2[b],3[b]	4	E	SR 3.3.2.1 SR 3.3.2.5 SR 3.3.2.9 SR 3.3.2.10	≤ 3.2 psig	3.0 psig
d. Steam Line Pressure						
(1) Low	1,2[b],3[a][b]	3 per steam line	D	SR 3.3.2.1 SR 3.3.2.5 SR 3.3.2.9 SR 3.3.2.10	≥ 744 psig	775 psig

(continued)

(a) Above the P-11 (Pressurizer Pressure) interlock.

(b) Except when all MSIVs are closed and de-activated.

Table 3.3.2-1 (page 3 of 5)
Engineered Safety Feature Actuation System Instrumentation

FUNCTION	APPLICABLE MODES OR OTHER SPECIFIED CONDITIONS	REQUIRED CHANNELS	CONDITIONS	SURVEILLANCE REQUIREMENTS	ALLOWABLE VALUE	NOMINAL TRIP SETPOINT
4. Steam Line Isolation (continued)						
(2) Negative Rate - High	3[b][c]	3 per steam line	D	SR 3.3.2.1 SR 3.3.2.5 SR 3.3.2.9 SR 3.3.2.10	≤ 122.8[d] psi	100[d] psi
5. Turbine Trip and Feedwater Isolation						
a. Turbine Trip						
(1) Automatic Actuation Logic and Actuation Relays	1,2	2 trains	I	SR 3.3.2.2 SR 3.3.2.4 SR 3.3.2.6	NA	NA
(2) SG Water Level-High-High (P-14)	1,2	4 per SG	J	SR 3.3.2.1 SR 3.3.2.2 SR 3.3.2.4 SR 3.3.2.5 SR 3.3.2.6 SR 3.3.2.9 SR 3.3.2.10	≤ 85.6% (Unit 1) ≤ 78.9% (Unit 2)	83.9% (Unit 1) 77.1% (Unit 2)
(3) Safety Injection	Refer to Function 1 (Safety Injection) for all initiation functions and requirements. See Item 5.a.(1) for Applicable MODES.					
b. Feedwater Isolation						
(1) Automatic Actuation Logic and Actuation Relays	1,2[e],3[e]	2 trains	H	SR 3.3.2.2 SR 3.3.2.4 SR 3.3.2.6	NA	NA

(continued)

(b) Except when all MSIVs are closed and de-activated.

(c) Trip function automatically blocked above P-11 (Pressurizer Pressure) interlock and may be blocked below P-11 when Steam Line Isolation Steam Line Pressure - Low is not blocked.

(d) Time constant utilized in the rate/lag controller is ≥ 50 seconds.

(e) Except when all MFIVs, MFCVs, and associated bypass valves are closed and de-activated or isolated by a closed manual valve.

Table 3.3.2-1 (page 4 of 5)
Engineered Safety Feature Actuation System Instrumentation

FUNCTION	APPLICABLE MODES OR OTHER SPECIFIED CONDITIONS	REQUIRED CHANNELS	CONDITIONS	SURVEILLANCE REQUIREMENTS	ALLOWABLE VALUE	NOMINAL TRIP SETPOINT
(2) SG Water Level- High High (P-14)	1,2(e),3(e)	4 per SG	D	SR 3.3.2.1 SR 3.3.2.2 SR 3.3.2.4 SR 3.3.2.5 SR 3.3.2.6 SR 3.3.2.9 SR 3.3.2.10	≤ 85.6% (Unit 1) ≤ 78.9% (Unit 2)	83.9% (Unit 1) 77.1% (Unit 2)
(3) Safety Injection	Refer to Function 1 (Safety Injection) for all initiation functions and requirements. See Item 5.b.(1) for Applicable MODES.					
(4) Tavg-Low	1,2(e)	4	J	SR 3.3.2.1 SR 3.3.2.5 SR 3.3.2.9	≥ 561°F	564°F
coincident with Reactor Trip, P-4	Refer to Function 8.a (Reactor Trip, P-4) for all initiation functions and requirements.					
(5) Doghouse WaterLevel - High High	1,2(e)	2 per doghouse	L	SR 3.3.2.8	≤ 12 inches above 577 ft floor level	11 inches above 577 ft floor level
6. Auxiliary Feedwater						
a. Automatic Actuation Logic and Actuation Relays	1,2,3	2 trains	H	SR 3.3.2.2 SR 3.3.2.4 SR 3.3.2.6	NA	NA
b. SG Water Level - Low Low	1,2,3	4 per SG	D	SR 3.3.2.1 SR 3.3.2.5 SR 3.3.2.9 SR 3.3.2.10	≥ 9% (Unit 1) ≥ 35.1% (Unit 2)	10.7% (Unit 1) 36.8% (Unit 2)
c. Safety Injection	Refer to Function 1 (Safety Injection) for all initiation functions and requirements.					
d. Loss of Offsite Power	1,2,3	3 per bus	D	SR 3.3.2.3 SR 3.3.2.9 SR 3.3.2.10	≥ 3242 V	3500 V
e. Trip of all Main Feedwater Pumps	1,2	3 per pump	K	SR 3.3.2.8 SR 3.3.2.10	NA	NA
f. Auxiliary Feedwater Pump Train A and Train B Suction Transfer on Suction Pressure - Low	1,2,3	3 per train	M	SR 3.3.2.8 SR 3.3.2.10	A) ≥ 9.5 psig B) ≥ 5.2 psig (Unit 1) ≥ 5.0 psig (Unit 2)	A) 10.5 psig B) 6.2 psig (Unit 1) 6.0 psig (Unit 2)

(continued)

(e) Except when all MFIVs, MFCVs, and associated bypass valves are closed and de-activated or isolated by a closed manual valve.

Table 3.3.2-1 (page 5 of 5)
Engineered Safety Feature Actuation System Instrumentation

FUNCTION	APPLICABLE MODES OR OTHER SPECIFIED CONDITIONS	REQUIRED CHANNELS	CONDITIONS	SURVEILLANCE REQUIREMENTS	ALLOWABLE VALUE	NOMINAL TRIP SETPOINT
7. Automatic Switchover to Containment Sump						
a. Automatic Actuation Logic and Actuation Relays	1,2,3,4	2 trains	C	SR 3.3.2.2 SR 3.3.2.4 SR 3.3.2.6	NA	NA
b. Refueling Water Storage Tank (RWST) Level – Low	1,2,3,4	4	N	SR 3.3.2.1 SR 3.3.2.7 SR 3.3.2.9 SR 3.3.2.10	≥ 162.4 inches	177.15 inches
Coincident with Safety Injection	Refer to Function 1 (Safety Injection) for all initiation functions and requirements.					
8. ESFAS Interlocks						
a. Reactor Trip, P-4	1,2,3	1 per train, 2 trains	F	SR 3.3.2.8	NA	NA
b. Pressurizer Pressure, P-11	1,2,3	3	O	SR 3.3.2.5 SR 3.3.2.9	≥ 1944 and ≤ 1966 psig	1955 psig
c. T_{avg} - Low Low, P-12	1,2,3	1 per loop	O	SR 3.3.2.5 SR 3.3.2.9	≥ 550°F	553°F
9. Containment Pressure Control System						
a. Start Permissive	1,2,3,4	4 per train	P	SR 3.3.2.1 SR 3.3.2.7 SR 3.3.2.9	≤ 1.0 psid	0.9 psid
b. Termination	1,2,3,4	4 per train	P	SR 3.3.2.1 SR 3.3.2.7 SR 3.3.2.9	≥ 0.25 psid	0.35 psid
10. Nuclear Service Water Suction Transfer - Low Pit Level	1,2,3,4	3 per pit	Q,R	SR 3.3.2.1 SR 3.3.2.9 SR 3.3.2.11 SR 3.3.2.12	≥ El. 555.4 ft	El. 557.5 ft

Catawba Nuclear Station
2007 NRC Exam
Reactor Operator

Question 41

Bank Question: 07-41 ***Answer: A***

---

1 Pt(s). A failure of the Containment Ventilation system causes equilibrium Containment temperature to increase from 119 deg F to 126 deg F.

How does Pressurizer level indication change due to this increase in Containment temperature?

A. Level indicates higher than actual due to reference leg density decreasing

B. Level indicates lower than actual due to reference leg density decreasing

C. Level indicates higher than actual due to reference leg density increasing

D. Level indicates lower than actual due to reference leg density increasing

---

Distracter Analysis:

A. **Correct:**

B. **Incorrect:**
Plausible: Level indication is incorrect but cause is correct.

C. **Incorrect:**
Plausible: Level indication is correct but cause is incorrect.

D. **Incorrect**:
Plausible: Both indication and cause are incorrect.

Level: RO

K/A: 022 Containment Cooling System (CCS) K3 Knowledge of the effect that a loss or malfunction of the CCS will have on the following: (CFR: 41.7 / 45.6) K3.02 Containment instrumentation readings 3.0 3.3

Lesson Plan Objective: NONE

Source: BANK (Harris 2004)

Level of knowledge: comprehension

References:
1.
2.

c) Adverse Containment Conditions (greater than 3 PSIG in Containment)

1) Can result in reference leg temp. increase.

2) Causes the transmitter high pressure side to be at a lower pressure due to reduced water density.

3) Results in the indicated level being higher than actual level.

d) Break on PZR line to transmitter [low pressure (impulse) side]

1) Allows actual level pressure to be removed from diaphragm.

2) Reference leg pressure to be removed from diaphragm. (delta P Maximum)

3) Results in indicated level to decrease to zero.

e) Rupture in transmitter diaphragm.

1) Results in high pressure side equalizing with low pressure (actual level) side.

2) Results in indicated level to read 100%. (delta P minimum) Normally when the actual level in the PZR reaches the reference potential level, there is "0" Delta P across the transmitter diaphragm and the PZR indicates full.

3. Summary

3.1 Major Topics Covered

A. Review Input Signals

B. Review Switch Operation and Protection Logic

C. Review Automatic Actions

3.2 Review Objectives

Catawba Nuclear Station
2007 NRC Exam
Reactor Operator

Question 42

Bank Question: 07-42 ***Answer: B***

---

1 Pt(s). Unit 1 NF to the ice condenser air handling units has been isolated to allow an auxiliary building NF valve leak to be repaired. What action should be taken during this time period?

A. The ice condenser should be immediately declared inoperable.

B. The glycol expansion tank level should be reduced to ensure it does not overflow.

C. The KR bypass valves should be closed to prevent KR freezing inside the NF chillers.

D. If ice condenser temperature increases to 15 deg F, NF flow should be immediately restored.

Distracter Analysis:

A. **Incorrect:**
Plausible: Per TS 3.0.6 this would be required if the ice condenser TS assumed NF as a support system but the TS does not care how we maintain temp only that we do.

B. **Correct:**

C. **Incorrect:**
Plausible: The valves are actually required to be open to prevent freezing.

D. **Incorrect**:
Plausible: 15 is within the normal range of temperature. Actual value to restore flow is 25 deg F.

Level: RO

K/A: SYSTEM: 025 Ice Condenser System A1 Ability to predict and/or monitor changes in parameters associated with operating the ice condenser system controls including: (CFR: 41.5 / 45.5) A1.03 Glycol flow to ice condenser air handling units 2.5* 2.5*

Lesson Plan Objective: NF04 Given appropriate plant conditions, apply limits and precautions associated with related station procedures.

Source: NEW

Level of knowledge: Memory

References:
1. NF OP
2.

Ice Condenser Refrigeration System

1. Purpose

To define the operation of the Ice Condenser Refrigeration System.

2. Limits and Precautions

2.1 The maximum allowable ΔT between the ice bay floor and the glycol coolant is 20°F.

2.2 If eaten, sodium tetraborate ice will cause immediate diarrhea.

2.3 NF glycol chillers/pumps duties are as follows:

- If 1 or 2 chillers are in service, 1 pump is required.
- If 3 chillers are in service, 2 pumps are required.
- If 4 chillers are in service, 3 pumps are required.

2.4 When gate valves in glycol service have been closed, briefly loosen the bonnet plug before opening to relieve pressure across the valve which could prevent it from opening.

2.5 When isolating a portion of the NF System for any reason, always allow for expansion of the cold glycol to ambient temperatures. If containment isolation valves are to be closed, consider reducing glycol expansion tank level.

2.6 A lo-lo level signal on the Glycol Expansion Tank will close containment isolation valves 1(2)NF-228A and 1(2)NF-234A. A bypass switch is provided to allow opening these valves with a lo-lo level.

2.7 When venting or draining glycol, catch the glycol by using hoses and buckets to ensure no spillage occurs.

2.8 Caution should be used when operating the NF AHU Glycol Outlet Vents to prevent possible damage to the vendor supplied 1/4 inch brass piping.

2.9 The maximum pressure drop across Ice Condenser Glycol Bypass Filter is 10 psid.

2.10 To prevent freezing of KR water in the condensers, do **NOT** close KR bypass valves around chiller package condenser control valves.

2.11 Glycol is a serious health hazard. Avoid skin contact and inhalation of vapors. Refer to MSDS #0645.

2.12 If glycol is spilled, take immediate action to prevent the glycol from entering floor drains.

3.6 CONTAINMENT SYSTEMS

3.6.12 Ice Bed

LCO 3.6.12 The ice bed shall be OPERABLE.

APPLICABILITY: MODES 1, 2, 3, and 4.

ACTIONS

CONDITION	REQUIRED ACTION	COMPLETION TIME
A. Ice bed inoperable.	A.1 Restore ice bed to OPERABLE status.	48 hours
B. Required Action and associated Completion Time not met.	B.1 Be in MODE 3. AND B.2 Be in MODE 5.	6 hours 36 hours

SURVEILLANCE REQUIREMENTS

SURVEILLANCE	FREQUENCY
SR 3.6.12.1 Verify maximum ice bed temperature is $\leq$ 27°F.	12 hours

(continued)

SURVEILLANCE REQUIREMENTS (continued)

SURVEILLANCE		FREQUENCY
SR 3.6.12.2	----------NOTE---------- The chemical analysis may be performed on either the liquid solution or on the resulting ice. ---------- Verify, by chemical analysis, that ice added to the ice condenser meets the boron concentration and pH requirements of SR 3.6.12.7.	Each ice addition
SR 3.6.12.3	Verify, by visual inspection, accumulation of ice on structural members comprising flow channels through the ice bed is ≤ 15 percent blockage of the total flow area for each safety analysis section.	18 months
SR 3.6.12.4	Verify total mass of stored ice is ≥ 2,132,000 lbs by calculating the mass of stored ice, at a 95 percent confidence, in each of three Radial Zones as defined below, by selecting a random sample of ≥ 30 ice baskets in each Radial Zone, and Verify: 1. Zone A (radial rows 8, 9), has a total mass of ≥ 324,000 lbs 2. Zone B (radial rows 4, 5, 6, 7), has a total mass of ≥ 1,033,100 lbs 3. Zone C (radial rows 1, 2, 3), has a total mass of ≥ 774,900 lbs	18 months
SR 3.6.12.5	Verify that the ice mass of each basket sampled in SR 3.6.12.4 is ≥ 600 lbs.	18 months

(continued)

SURVEILLANCE REQUIREMENTS (continued)

SURVEILLANCE		FREQUENCY
SR 3.6.12.6	Visually inspect, for detrimental structural wear, cracks, corrosion, or other damage, two ice baskets from each group of bays as defined below: a. Group 1 – bays 1 through 8; b. Group 2 – bays 9 through 16; and c. Group 3 – bays 17 through 24.	40 months
SR 3.6.12.7	---------- NOTE ---------- The requirements of this SR are satisfied if the boron concentration and pH values obtained from averaging the individual sample results are within the limits specified below. ---------- Verify, by chemical analysis of the stored ice in at least one randomly selected ice basket from each ice condenser bay, that ice bed: a. Boron concentration is $\geq$ 1800 ppm and $\leq$ 2330 ppm; and b. pH is $\geq$ 9.0 and $\leq$ 9.5.	54 months

Catawba Nuclear Station
2007 NRC Exam
Reactor Operator

Question 43

Bank Question: 07-43 ***Answer: C***

---

1 Pt(s). During a large break LOCA, with the following equipment status:

- NC pressure = 4 psig
- NC temperature = 202 deg F
- All SI equipment on as expected
- Containment pressure = 3.2 psig
- Containment Sump level = 5.8 feet

Both the ND and NS pumps exhibit the following symptoms:

- Discharge Flow fluctuations
- Discharge Press fluctuations
- Pump Amperage erratic

What is the probable cause of the above symptoms and what would require the NS pumps to be restarted?

A. The ND pumps have lost suction and are no longer able to provide adequate suction to the NS Pumps. The NS pumps are restarted if Containment pressure approaches 15 psig.

B. The ND pumps have lost suction and are no longer able to provide adequate suction to the NS Pumps. The NS pumps are restarted if an orange or red path occurs for Containment.

C. Cavitation caused by Containment Sump blockage. The NS pumps are restarted if Containment pressure approaches 15 psig.

D. Cavitation caused by Containment Sump blockage. The NS pumps are restarted if an orange or red path occurs for Containment.

Distracter Analysis:

A. **Incorrect:**
Plausible: The ND pumps do provide suction to ECCS Pumps during CLR but not the NS pumps. Start reason is correct.

B. **Incorrect:**
Plausible: The ND pumps do provide suction to ECCS Pumps during CLR but not the NS pumps. The NS pumps are not started on an orange path under these conditions and a red path is after the pumps are already started.

C. **Correct:**

D. **Incorrect**:
Plausible: Correct cause. The NS pumps are not started on an orange path under these conditions and a red path is after the pumps are already started.

Catawba Nuclear Station
2007 NRC Exam
Reactor Operator

Question 43

Level: RO

K/A: SYSTEM: 026 Containment Spray System (CSS) A2 Ability to (a) predict the impacts of the following malfunctions or operations on the CSS; and (b) based on those predictions, use procedures to correct, control, or mitigate the consequences of those malfunctions or operations: (CFR: 41.5 / 43.5 / 45.3 / 45.13) A2.07 Loss of containment spray pump suction when in recirculation mode, possibly caused by clogged sump screen, pump inlet high temperature exceeded cavitation, voiding), or sump level below cutoff (interlock) limit 3.6 3.9

Lesson Plan Objective: NONE

Source: NEW

Level of knowledge: comprehension

References:
1. EP\F-0, EP/ECA-1.3
2.

A. Purpose

This procedure provides actions to respond to a containment sump blockage condition that prevents establishing or maintaining at least one train of ECCS flow in the recirc mode.

B. Symptoms or Entry Conditions

This procedure is entered from:

- EP/1/A/5000/ES-1.3 (Transfer To Cold Leg Recirculation), Step 9 when indications of pump cavitation caused by sump blockage prevent establishing or maintaining at least one train of ECCS flow in the recirc mode.
- EP/1/A/5000/ECA-1.1 (Loss Of Emergency Coolant Recirculation), Step 1 when indications of pump cavitation caused by sump blockage prevent establishing or maintaining at least one train of ECCS flow in the recirc mode.

ACTION/EXPECTED RESPONSE	RESPONSE NOT OBTAINED
13. **IF AT ANY TIME containment pressure approaching 15 PSIG, THEN perform the following:**	
__ a. Evaluate aligning NS or ND aux containment spray. **REFER TO** Enclosure 3 (Containment Spray).	
__ b. **IF** adequate spray flow cannot be established to maintain containment pressure less than 15 PSIG, **THEN** contact TSC to evaluate establishing normal containment cooling. **REFER TO** Enclosure 25 (Normal Containment Cooling).	
14. **Verify flow path from FWST back to containment sump isolated as follows:**	
a. A Train:	
__ 1) Verify 1NI-185A (ND Pump 1A Cont Sump Suct) - OPEN.	__ 1) **IF** 1NI-185A is closed, **THEN GO TO** Step 14.b.
__ 2) Ensure 1FW-27A (ND Pump 1A Suct From FWST) - CLOSED.	
b. B Train:	
__ 1) Verify 1NI-184B (ND Pump 1B Cont Sump Suct) - OPEN.	__ 1) **IF** 1NI-184B is closed, **THEN GO TO** Step 15.
__ 2) Ensure 1FW-55B (ND Pump 1B Suct From FWST) - CLOSED.	
15. **Initiate makeup to FWST as follows:**	
__ • Makeup to FWST from normal makeup source. **REFER TO** OP/1/A/6200/014 (Refueling Water System).	
OR	
__ • Makeup to FWST from spent fuel pool. **REFER TO** Enclosure 11 (Makeup to FWST from Spent Fuel Pool).	

CAUTION

- **Starting NS pump on same train as running ND pump may cause cavitation.**
- **Aligning ND spray flow may cause cavitation.**
- **Operator dose rate near ND containment spray valves may go up significantly if locally throttled open.**

NOTE The preferred option for spray is to run NS on opposite train than operating ND pump.

1. **WHEN increasing flow from containment sump in subsequent steps, THEN observe the following limits:**

__ • Do not increase flow to point that is known to cause pump cavitation.

__ • **IF** cavitation occurs, **THEN** decrease flow from sump to stop cavitation.

2. **Evaluate starting NS as follows:**

• **IF** desired, **THEN** start NS Pump 1A as follows:

__ a. Ensure NS has been aligned to sump **AND** RN aligned to NS. **REFER TO** EP/1/A/5000/ES-1.3 (Transfer To Cold Leg Recirculation).

b. Open one or both of the following:

__ • 1NS-29A (NS Spray Hdr 1A Cont Isol)

__ • 1NS-32A (NS Spray Hdr 1A Cont Isol).

__ c. Start NS Pump 1A.

• **IF** desired, **THEN** start NS Pump 1B as follows:

__ a. Ensure NS has been aligned to sump **AND** RN aligned to NS. **REFER TO** EP/1/A/5000/ES-1.3 (Transfer To Cold Leg Recirculation).

b. Open one or both of the following:

__ • 1NS-15B (NS Spray Hdr 1B Cont Isol)

__ • 1NS-12B (NS Spray Hdr 1B Cont Isol).

__ c. Start NS Pump 1B.

Catawba Nuclear Station
2007 NRC Exam
Reactor Operator

Question 44

Bank Question: 07-44 ***Answer: D***

---

1 Pt(s). Given the following conditions:

- Reactor power is 11%, with a plant startup in progress
- Steam dumps are modulated open in Pressure Control mode
- Tave - 559 degrees F
- NC press - 2235 psig
- Main Steam Header pressure transmitter 1SMP5200 fails at its current pressure value.

Which ONE (1) of the following is the steam dump response as startup continues?

A. Steam dumps modulate based on the Tref/Tave error signal generated as power rises.

B. Steam dumps will modulate closed as power is increased, and will only reopen when the Steam Dump Mode Selector Switch is placed in the Tave Mode.

C. Steam dumps remain at their current position and will begin to modulate again when Steam Dumps are placed in the Tave Mode.

D. Steam dumps remain at their current position and close when Steam Dump Mode Selector Switch is placed in Tave Mode.

Distracter Analysis:

A. **Incorrect**:
Plausible: Correct for a load rejection with steam dump controller in the Tave Mode minus the part that states "as power rises".

B. **Incorrect:**
Plausible: First statement is the way it would work, if the transmitter had not failed, as the turbine accepts the steam load. Second statement is correct with a C7A or C7B and Tave mode selected.

C. **Incorrect:**
Plausible: First statement is correct. Second statement is correct with a C7A or C7B and Tave mode selected.

D. **Correct:**

Level: RO

Catawba Nuclear Station
2007 NRC Exam
Reactor Operator

Question 44
K/A: 039 Main and Reheat Steam System (MRSS) K1 Knowledge of the physical connections and/or cause-effect relationships between the MRSS and the following systems: (CFR: 41.2 to 41.9 / 45.7 to 45.8) K1.06 Condenser steam dump 3.1 3.0

Lesson Plan Objective: IDE09 Describe the system response to a failure of each input to IDE.

Source: BANK (Indian Point 2003)

Level of knowledge: comprehension

References:
1.
2. IDE Lesson

5.3 Main Steam Header Pressure

A. Fails High - affects Steam Pressure Controller.

1. Would cause an opening signal to be generated. If "STM PRESS" is selected, the dumps will open to bring pressure down.

B. Fails Low

1. Steam dumps would not actuate in pressure mode.

5.4 Turbine Impulse Pressure Channel I

A. Fails High - would affect Load Rejection Controller

1. The Load Rejection Controller would not generate an output since T_{ref} would in most cases, always be higher than Auctioneered Hi T_{avg}.

2. This situation would require manual operation of the steam dump system to reduce T_{avg} unless T_{avg} increased above the failed T_{ref} value by more than 3 degrees.

B. Fails Low - would affect Load Rejection Controller

1. Generates a T_{avg} - T_{ref} mismatch causing an output signal to be generated from the Load Rejection Controller when indicated T_{avg} exceeds T_{ref} by $3^{o}F$.

2. Steam Dump Valves will not open until C-7A or C-7B arming signals are generated by a subsequent failure or actual load rejection/reduction.

5.5 Turbine Impulse Pressure Channel II

A. Affects C-7A and C7-B loss of load interlock arming signals

1. A high failure would prevent the C-7A and C-7B loss of load interlocks from actuating.

2. If Channel II impulse pressure fails low, loss of load interlocks C-7A and C-7B will actuate to arm the steam dumps.

5.6 Reactor Trip Breaker Failures

A. Breaker "A" fails to open on a reactor trip

1. The Plant Trip controller is enabled due to P-4 Train B.

2. P-4 Train A arming signal to the condenser dumps is not available.

3. Condenser dumps could still be armed if C7A or C7B are actuated on the reactor trip.

4. Atmospheric dumps will be armed if C7B is actuated on the reactor trip, but the Plant Trip controller output is limited to 49% demand. This demand is insufficient to open the atmospheric dumps.

B. Breaker "B" fails to open on a reactor trip

Catawba Nuclear Station
2007 NRC Exam
Reactor Operator

Question 45

Bank Question: 07-45 ***Answer: A***

---

1 Pt(s). Following a transient on Unit 1 with only one CFPT in service, the following parameters are noted:

- Reactor Power = 65%
- All S/G Levels = 30%
- Feedwater Pump Master Controller has automatically swapped to manual
- All CF valves have automatically swapped to manual.
- Suction Flow = 10200 gpm
- Suction pressure = 250 psig
- Discharge pressure = 1340 psig
- CFPT vacuum = 19 inches HG
- Bearing oil pressure = 5 psig

Which of the following actions should the RO take for the above conditions?

A. Start one hotwell and condensate booster pump or the CFPT will trip in 20 sec.

B. Lower CF pump speed to decrease discharge pressure or the CFPT will trip in 20 sec.

C. Ensure the reactor is tripped and enter EP/1/A/5000/E-0 (Reactor Trip or Safety Injection).

D. Ensure the turbine is tripped and enter AP/1/A/5500/002 (Turbine Generator Trip)

Distracter Analysis:

A. **Correct:**

B. **Incorrect**:
Plausible: Pressure is at the alarm setpoint not the trip setpoint and there is no time delay associated with this trip.

C. **Incorrect:**
Plausible: S/G levels are below Rx Trip for Unit 2 or if the student assumes the CFPT trips causing a loss of CF (would be correct) which would then require a trip of the reactor if > 5%.

D. **Incorrect:**
Plausible: If student assumes loss of both CFPT requires only a T/G trip when Rx is less than 69%.

Catawba Nuclear Station
2007 NRC Exam
Reactor Operator

Question 45
Level: RO

K/A: SYSTEM: 059 Main Feedwater (MFW) System A3 Ability to monitor automatic operation of the MFW, including: (CFR: 41.7 / 45.5) A3.04 Turbine driven feed pump 2.5* 2.6*

Lesson Plan Objective: FPT12 List the CFPT trips, including setpoints.

Source: NEW

Level of knowledge: comprehension

References:
1. FPT Lesson, AP/06
2. ARP for 1AD-5.

2. These ETSVs are tested monthly using PT/1/A/4250/004A, Feedwater Pump Turbine Monthly Test. The test is performed from the ONLINE ET TEST graphic on the MK VI computer.
3. The pump trips and setpoints for both units are:

a)	*LOW LOW SUCTION PRESSURE	275 psig
b)	*LO LO SUCTION FLOW	3000 gpm
c)	HIGH HIGH DISCHARGE PRESSURE	1385 psig
d)	CF PUMP LO-LO BRG. OIL PRESS	4 psig
e)	CF TURB LO-LO OIL PRESS	4 psig
f)	Unit 2 ACTIVE THRUST BEARING WEAR	40 psig
g)	Unit 2 INACTIVE THRUST BEARING	40 psig
h)	UNIT 1 THRUST BRG WEAR	> Setpoint (TSI Monitor)
i)	#LOW VACUUM	16.9 in. Hg
j)	PRIMARY CFPT OVER SPEED	113%
k)	EMERGENCY OVERSPEED TRIP	115%
l)	LOCAL TRIP SWITCH	
m)	CONTROL ROOM TRIP SWITCH	
n)	HI HI DOG HOUSE LEVEL	11 inches
o)	HI HI S/G LEVEL	83.9% (U2-77%)
p)	SAFETY INJECTION	
q)	OIL FIRE LOCKOUT	
r)	Unit 1 ZERO SPEED TRIP	0 RPM
s)	Unit 1 HP AND LP STOP VALVES	CLOSED

* **These are on 20 second Time Delays**

After a three second time delay on Unit 1.

On both units, the low vacuum trip can be reset with a low vacuum present on.

2.5 SLC 16.7-14 – Review this SLC for Feedwater Pumps Turbine Trip Instrumentation. **(OBJ #14,15)**

2.6 OPERATING EXPERIENCE – COMMITTED

A. There is not committed OE for this lesson as of 04/16/07.

2.7 OPERATING EXPERIENCE – RECENT (04/19/07)

Catawba Nuclear Station
2007 NRC Exam
Reactor Operator

Question 46

Bank Question: 07-46 ***Answer: A***

---

1 Pt(s). A _____1_____ signal causes the CAPT #2 to be supplied steam from only the _____2_____?

	1	2
A	2/4 SSF W/R S/G Levels < 45%	2C S/G
B	2/4 C/R NR S/G Levels < 37%	2C S/G
C	2/4 SSF W/R S/G Levels < 45%	2B S/G
D	2/4 C/R NR S/G Levels < 37%	2B S/G

Distracter Analysis:

A. **Correct:**

B. **Incorrect:**
Plausible: Setpoint is correct for being fed from B and C S/G

C. **Incorrect:**
Plausible: Setpoint is correct but the S/G is wrong

D. **Incorrect**:
Plausible: Setpoint is correct for being fed from B and C S/G

Level: RO

K/A: 061 Auxiliary / Emergency Feedwater (AFW) System K1 Knowledge of the physical connections and/or cause effect relationships between the AFW and the following systems: (CFR: 41.2 to 41.9 / 45.7 to 45.8) K1.03 Main steam system 3.5 3.9

Lesson Plan Objective: CA04 List the automatic start signals (including setpoint) for the motor driven and turbine driven CA pumps

Source: NEW

Level of knowledge: Memory

References:
1. CA Lesson
2.

a) The design of the CA discharge headers essentially consists of two in-series check valves. One of these check valves being the automatic recirculation control (ARC) valves on the discharge of the pumps, and the other being the CA check valves in the Doghouses.

b) If the ARC valves leak by, pressure in the header is vented to the UST. Under this condition, the Header Pressure will approximate CACST Head Pressure (~ 50 psig).

c) If the ARC valves hold "tight" and the CA check valves leak any amount, then header pressure will be at SG Pressure (~ 1000 psig).

d) With the current piping configuration and valve arrangement, normal header pressure will either be ~ 50 psig or ~ 1000 psig

3. The Turbine Driven CA Pump discharges to the Auxiliary Feed Nozzles of all S/Gs.

4. Steam supply to the Turbine Driven CA Pump is provided from 'B' (SA-2) & 'C' (SA-5) steam generators.

5. The CAPT is required to be operable in order for the SSF to be fully functional.

6. SA-5 is the CAPT steam supply which is required for SSF operation. If SA-5 is inoperable, then the SSF is degraded. (PIP C-01-06038)

7. The motor driven pumps discharge as follows:

   a) CA Pump A - discharges to A & B S/G's through the Auxiliary Feed Nozzles.

   b) CA Pump B - Discharges to C & D S/G's through the Auxiliary Feed Nozzles.

8. Mini Flow Arrangement

   a) Each pump is provided with a recirculation path to the UST. The discharge line of each pump contains a Recirculation Control Valve to provide adequate flow through the pumps in low/no flow conditions.

   b) Motor Driven Pumps recirculate to the UST to maintain greater than or equal to the following:

      1) 110 gpm pump flow "continuous" (in excess of 2 hours in 24 hours)

      2) 60 gpm "intermittent" (2 hours or less in 24 hours)

   c) Turbine Driven recirculates to the UST to maintain greater than or equal to the following:

      1) 250 gpm "continuous" (in excess of 2 hours in 24 hours)

      2) 150 gpm "intermittent" (2 hours or less in 24 hours)

   d) A local flow meter provides indication of correct flow.

e) Status Lights in the Control Room provide indication when each pump is in recirculation.

9. Relief valves on the suction of all three pumps provide overpressure protection to the suction lines.

a) The most likely source of overpressure is leaking discharge check valves.

b) Each of the suction reliefs has a lift setpoint of 150 psig and a capacity of 30 gpm.

c) Discharge of each suction relief valve is to the associated pumps sump.

2.2 Operation

A. Automatic Operation (Obj # 4)

1. Start Signals: Motor Driven Pumps 1(2) A & B

a) Safety Injection: Train Related; Sequencer Activated (Load Group 8)

b) Blackout: Train Related; Sequencer Activated (Load Group 8)

c) Two of four S/G narrow range level channels in one of four S/G LO LO LEVEL (2 of 4 L.S./1 of 4 S/G) (Unit 1: 11%; Unit 2: 37%): starts both CA Pumps.

d) Loss of Both Feed Pumps (2/3 LOW FPT Control Oil Pressure (less than 75 psi): starts both CA Pumps.

e) AMSAC: Starts both CA Pumps.

1) Loss of CF feed path AMSAC: This system is functioning when Turbine Impulse Pressure is greater than 40% Turbine load and remains active for TWO (2) minutes after Turbine Load decreases to less than 40%.

(a) 3/4 CF Containment Isolation Valves closed **(UNIT 1 ONLY)**

(b) 3/4 Main Feed Regulating Valves less than 25% open with associated Bypass less than 50% open. After 30 Seconds of this condition AMSAC causes Both Trains of CA to Start.

2) Loss of Both Feed Pumps (This AMSAC start is not dependent on Turbine load being greater than 40%. It is always active).

2. Start Signals: Turbine Driven CA Pump # 1 & 2

a) Blackout on either 4160 Essential Bus; Sequencer activated

1) On a concurrent B/O and SI, the TDCAP will NOT start.

2) If an SI is received within 8.5 sec of a B/O, the TDCAP will NOT start.

3) If an SI signal is received and clears but the SI is not reset and then a B/O is received, the TDCAP will not start.

4) All B/O initiated TDCAP starts WILL be delayed by 8.5 sec for the Sequencer B/O logic to run.

5) If a B/O occurs and a subsequent SI occurs greater than 8.5 secs after the B/O, the TDCAP will autostart on the B/O and will continue to run at the time of the SI whether the "on/off" switch is in the "on" or "off" position until the CA Sys is Reset.

b) Two of four S/G narrow range level channels in two of four S/G LO LO LEVEL.

c) The following are NOT "CA AUTO STARTS" but merely cause the steam to be admitted to the Turbine, ("CA SYS VLV CTRL" resets remain lit):

1) Loss of Power or Instrument Air to 1(2)SA 2 or 5 causes these valves to fail open and admit Main Steam to the Turbine driven CA Pump.

2) 2/4 SSF Wide Range S/G Levels less than 45% cause SA-5 to fail open. **THIS FEATURE CAN NOT BE DEFEATED**. (A loss of SSF power will initiate this same failure).

3. Plant Response to the CA Auto Start.

a) BB flow control valves close.

b) BB Cont. Isolation and Bypasses Close; Train Related

c) NM Sample Cont. Isolations Close; Train Related

d) CF Cont. Isolation Bypasses Close; either train

e) Individual Tempering Line Isolation Valves Close; either train

f) Flow Control Valves fail to "FULL OPEN".

g) If it was a Turbine Driven Start; SA 2 & 5 fail open, Governor positions to Max speed and TD Flow Control Valves fail to "FULL OPEN".

h) "A" Train CA Signals causes TD governor to position to "MAX" speed and prevents manual closing of T&T Valve at MC-10. "B" Train DOES NOT provide these features.

i) RN Valves low suction pressure alignment circuits are enabled.

j) CS-47(Normal Hotwell M/U Control) fails closed on either train CA Auto start. This ensures the CA system is not affected by any UST inventory loss to the hotwell. Control board resets buttons for each train restores the valve to its normal makeup duties.

Catawba Nuclear Station
2007 NRC Exam
Reactor Operator

Question 47

Bank Question: 07-47 ***Answer: D***

---

1 Pt(s). Given the following:

- Voltage decreases to 50% of normal on "A" main bus line
- "A" main bus line is no longer synchronized with the "B" main bus line.

Which one of these loads would NOT lose power during the electrical transient?

A. 1ATC transformer

B. 1B circulating cooling water pump

C. 1C hotwell pump

D. 1ATD transformer

Distracter Analysis:

A. **Incorrect:**
Plausible 1ATC is powered from "A" main buss line via the short side of 1TA buss. The student must understand that for the conditions given a "dead" buss transfer will occur which will cause the 1A NCP to lose power. If the buses were in sync, the transfer would be a fast transfer which would not cause a loss of power to the NCP.

B. **Incorrect:**
Plausible: 1B RC Pump is feed from the long side of 1TB which is fed from A buss line. (The secondary components are not required to be powered from the same "train" power.) Since the transfer is a dead buss all components fed from A train will lose power. If the buses were in sync, the transfer would be a fast transfer which would not cause a loss of power to the RC Pump.

C. **Incorrect:**
Plausible: 1C HWP is from 1T1A via 1TD long side. Since the transfer is a dead buss, all components fed from A train will lose power. If the buses were in sync, the transfer would be a fast transfer which would not cause a loss of power to the HWP Pump.

D. **Correct**:: 1ATD is from 1TD short side and powered from "B" buss line transformer 1T1B and not affected. Whether a dead bus or fast transfer is performed the components fed from B Train will NOT loss power.

Level: RO

Catawba Nuclear Station
2007 NRC Exam
Reactor Operator

Question 47
K/A: SYSTEM: 062 AC Electrical Distribution System K3 Knowledge of the effect that a loss or malfunction of the ac distribution system will have on the following: (CFR: 41.7 / 45.6) K3.01 Major System loads. 3.5 3.9

Lesson Plan Objective: EPB04 Describe how a transfer of power on the 6.9 KV bus can be accomplished.

Source: Modified (CNS 2005)

Level of knowledge: comprehension

References:
1.
2. Lesson Plan EPB Page 14

2.2 Component Description (Obj. #2, 10, 16)

A. 6900V Bus (Switchgear) (OBJ. #2)

1. Supplies power to all of the large unit auxiliary loads and to the 4160V transformers.

2. Divided into 4 individual busses: 1TA, 1TB, 1TC and 1TD.

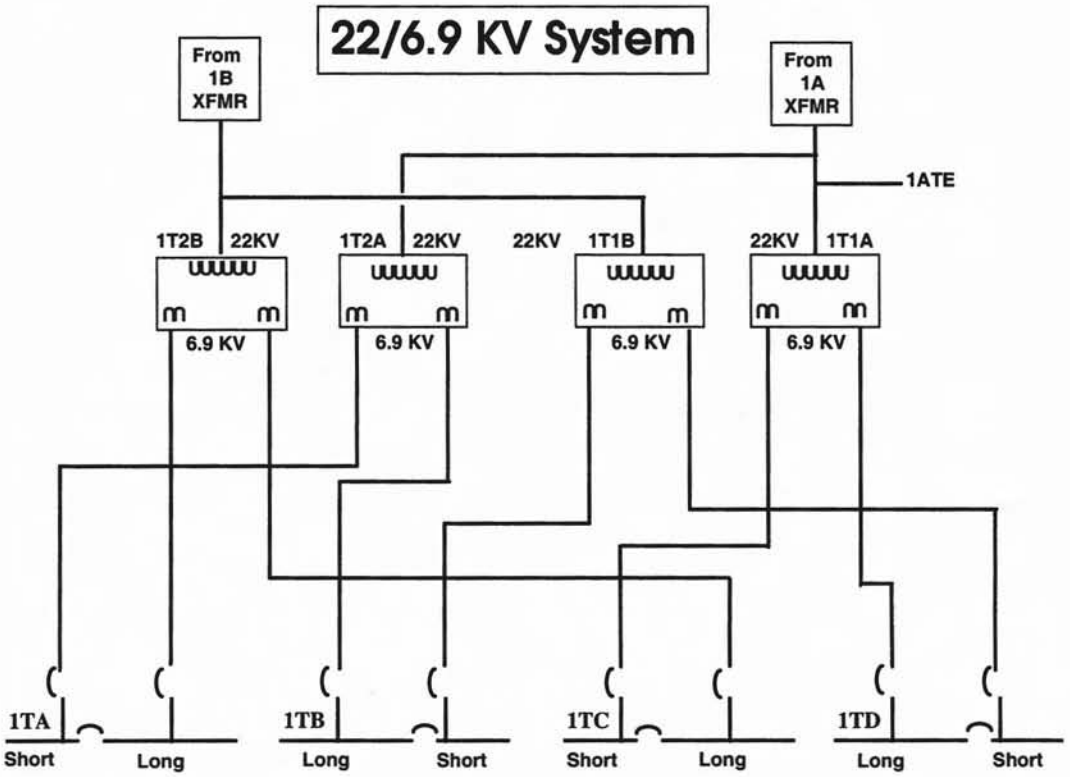

a) Each assembly has 14 breakers including 2 incoming breakers and a tie breaker. The tie breaker divides the bus into a short side (4 breakers) and a long side (9 breakers)

b) Each cubicle will have a breaker installed.

c) There is a Kirk-Key interlock between the normal and alternate feeders to the standby 4160V transformers that will be discussed later.

3. Incoming breakers are supplied with a fan for cooling to increase the rating of the breaker.

a) Without fan on - 2500 amps continuous

b) With fan - 3000 amps continuous

4. Each 6900V bus is powered from 2 auxiliary transformers - 2 incoming breakers closed, tie breaker open.
   a) 1TA - 1T2A (shortside) 1T2B (longside)

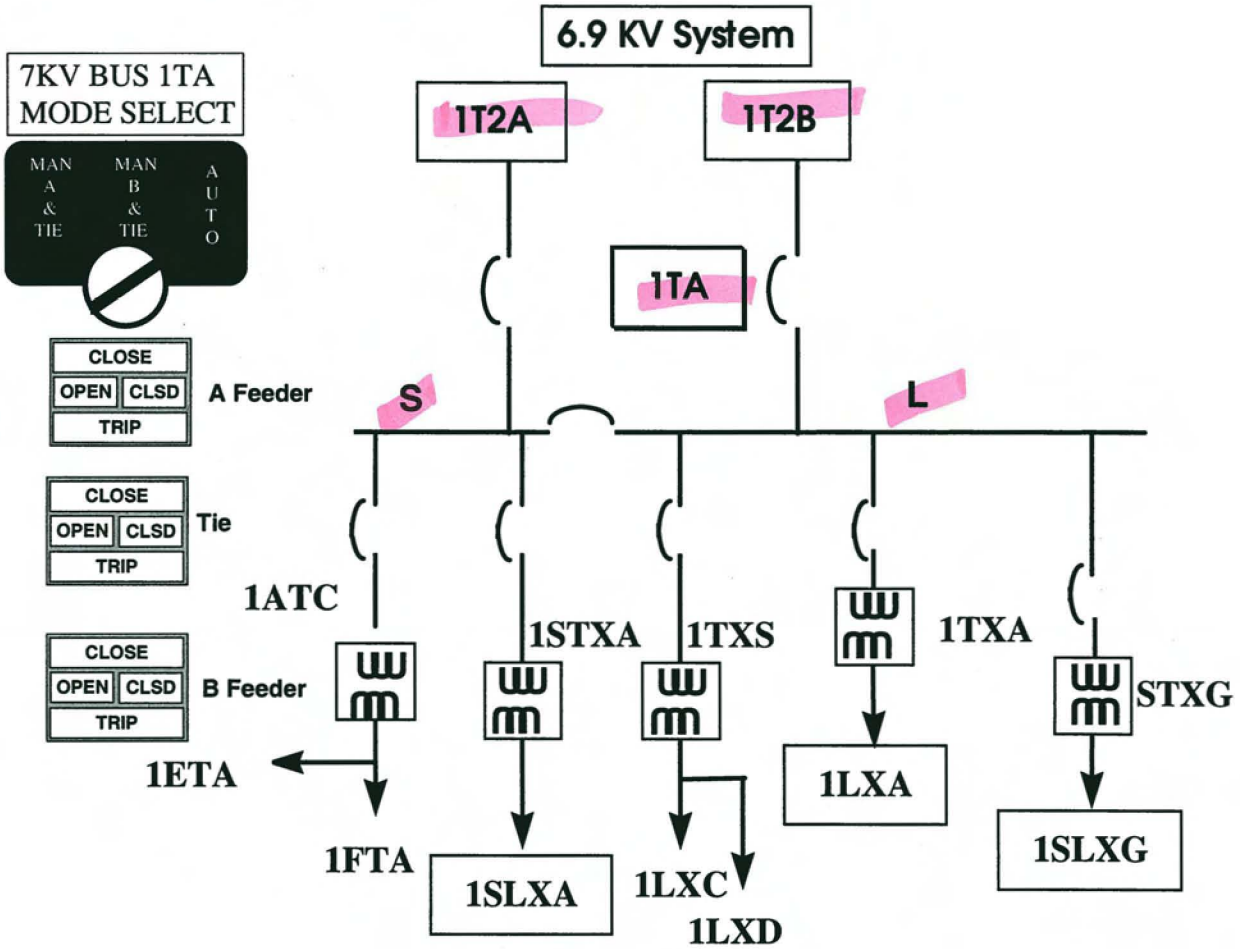

b) 1TB - 1T1B (shortside) 1T2A (longside)

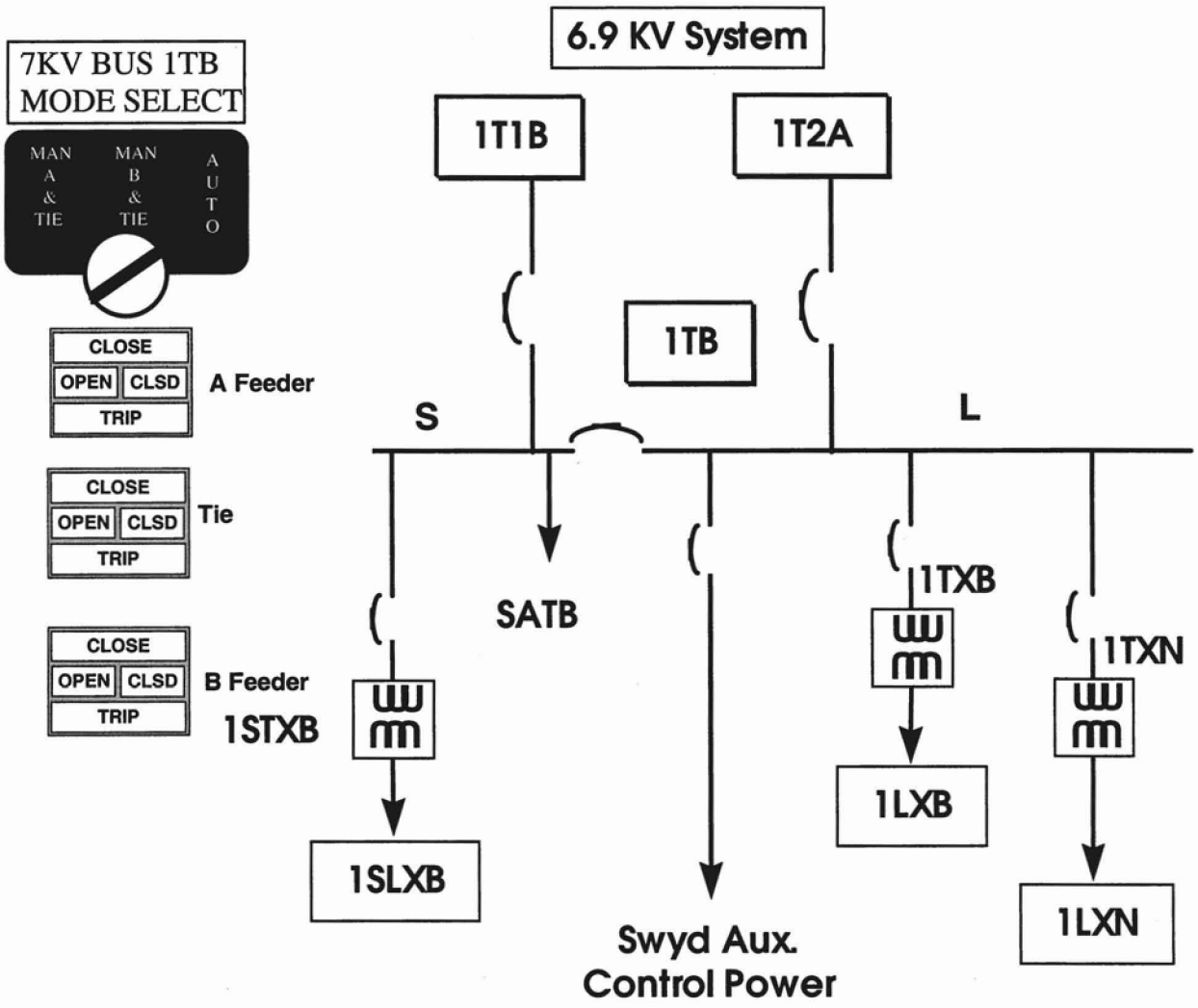

c) 1TC - 1T1A (shortside) 1T2B (longside)

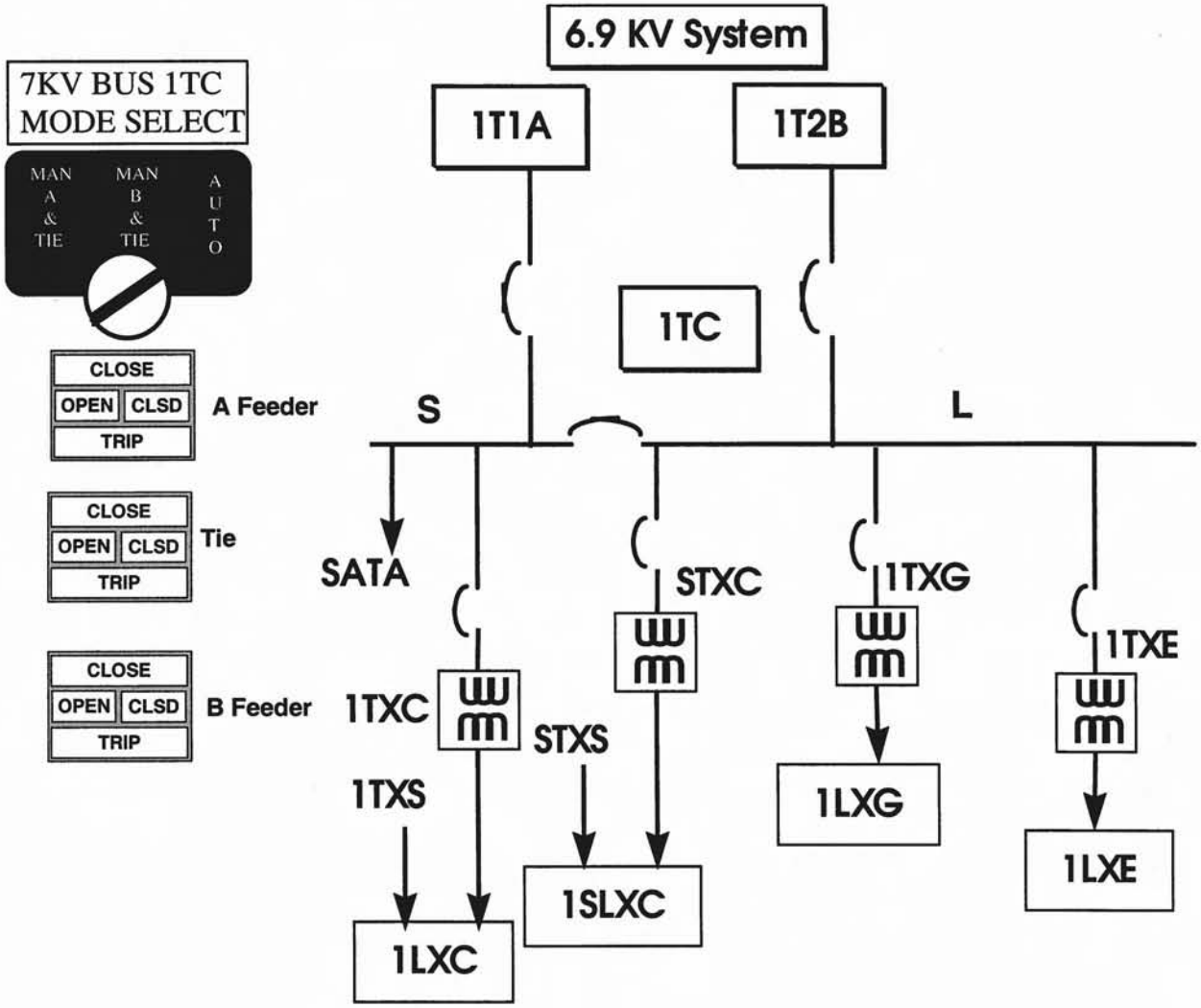

d) 1TD - 1T1B (shortside) 1T1A (longside)

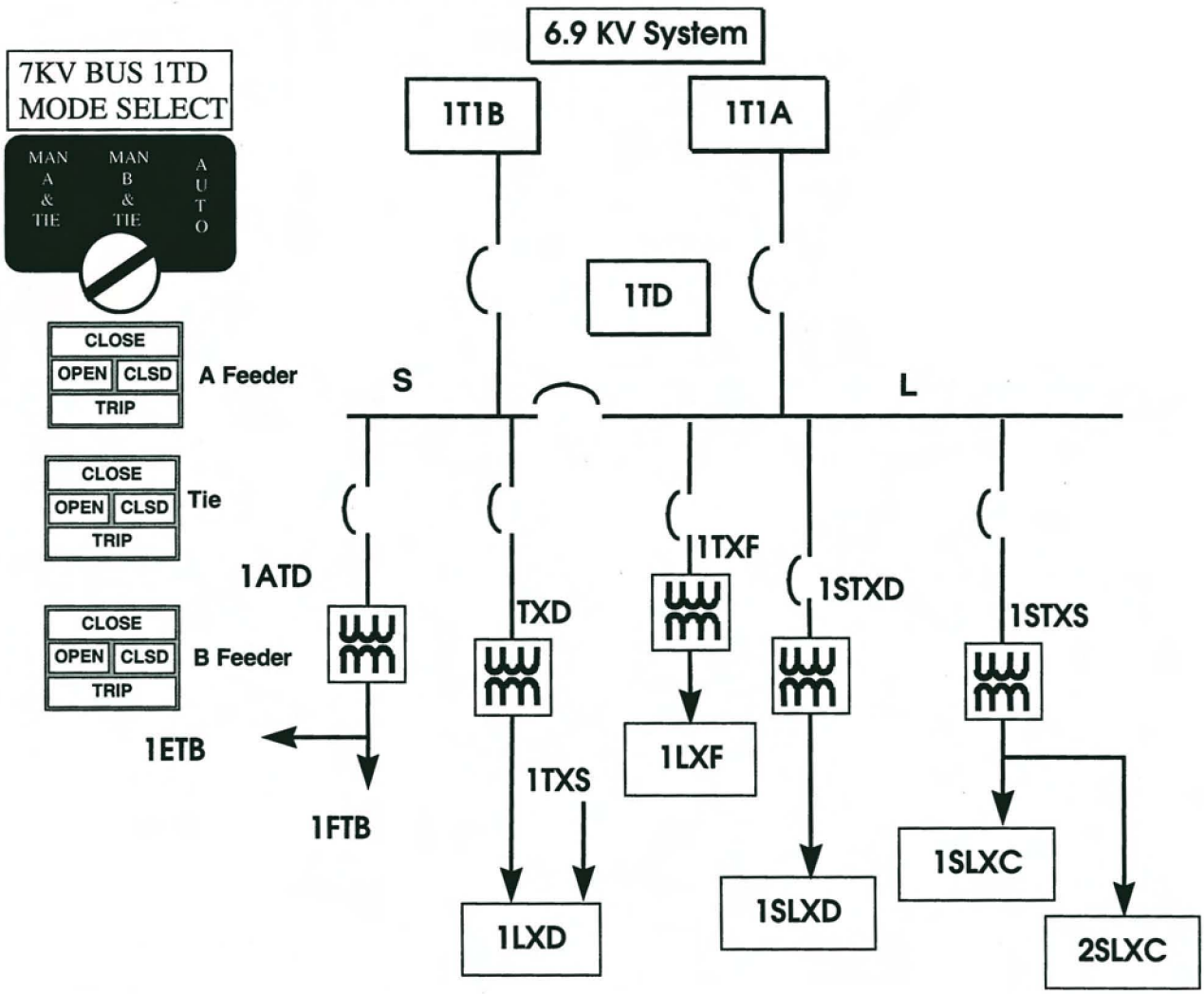

5. Below is a list of loads off of 6900V buses. (OBJ. #3)

1TA Loads

- Short Side (1T2A)
  - ATC
  - 1STXA
  - 1A NC Pump
- Long Side (1T2B)
  - 1STXG
  - 1A RC Pump
  - 1YV-C-1
  - 1A Hotwell Pump
  - 1TXS
  - 1A Booster Pump
  - 1TXA

1TB Loads

- Short Side (1T1B)
  - SATB
  - 1STXB
  - 1B NC Pump
- Long Side (1T2A)
  - 1YV-C-2
  - 1B RC Pump
  - 1B Hotwell Pump
  - 1B Booster Pump
  - 1B RL Pump
  - 1TXB
  - 1TXN
  - Switchyard Auxiliaries feeder

1TC Loads

- Short Side (1T1A)
  - SATA
  - 1TXC
  - 1 C NCP
- Long Side (1T2B)
  - STXC
  - 1 C RC Pump
  - "C" RL Pump
  - 1TXG
  - RY Pump A
  - 1C1 Heater Drain Pump
  - 1-YV-3 Chiller
  - 1TXE

1TD Loads

- Short Side (1T1B)
  - ATD
  - 1TXD
  - 1D NC Pump
- Long Side (1T1A)
  - 1TXF
  - 1D RC Pump
  - 1C Booster Pump
  - 1C Hotwell Pump
  - 1C2 Heater Drain Pump
  - STXS
  - 1STXD

6. 6.9KV incoming and tie breakers are controlled from control room - MC-11
   a) 3 position transfer switch (See one below typical of eight)
      1) Auto - allows auto swap
      2) Man "A" and Tie - allows operating the "A" incoming breaker and the tie breaker.
      3) Man "B" and Tie - allows operating the "B" incoming breaker and the tie breaker.

   b) Open - Close Pushbutton operates the breaker (See below)

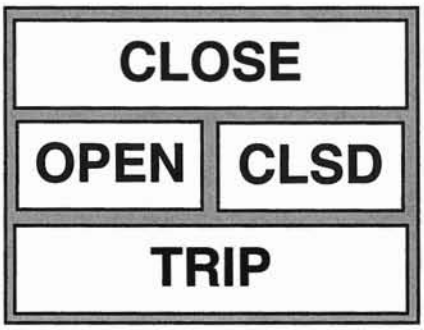

7. To supply a 6900V bus completely from one auxiliary transformer, the tie breaker can be closed and one incoming breaker opened.

8. Transfer can occur automatically or manually. (OBJ. #4)
   a) Auto Transfer
      1) Mode select switch in "Auto"
      2) Auto transfer initiated by a Zone Lockout or 75% UV on the incoming line (No fault on affected bus).
      3) If in synch, a fast transfer will occur. The incoming breaker opens before the tie breaker closes, but the transfer occurs within a few cycles with no loss of load.
      4) If **not** in sync a slow transfer will occur. The transfer is delayed to allow voltage to decay to a point that synchronization is not a concern (25% voltage). This will take approximately one second and a loss of load will occur.
      5) The AUTOMATIC FAST TRANSFER ENABLE, DEFEAT switch will allow defeat of the fast transfer when the unit is off line.
         (a) This switch is located in the 6.9KV bus rooms on the control panels with the under voltage transfer relays.
         (b) The purpose of this switch is to eliminate possible equipment damage from surges on fast transfer.
         (c) With the Main Generator off line, this switch is placed in the defeat position and then only slow transfers will occur. This switch controls the tie breaker.
         (d) The defeat removes the sync check relays (25s) from the circuit and provides for only a slow transfer.
   b) Manual Transfer (Example: Transfer 1TA to 1T2B)
      1) Select "Man A and TIE" - these are the breakers to be operated.
      2) Close the Tie breaker, the "A" feeder will open (Hot Bus).
      3) The transfer switch should always be selected to the position for the breakers to be operated.
9. 6900V Breaker - Gould ITE Power Circuit Breaker
      1) Operation of these breakers is discussed in the Breaker Lab lesson.
10. Protective Relaying
   a) Synch Check Relay (25) - allows fast transfer.
   b) Lock out relay - operates on:
      1) Overcurrent
      2) Ground Fault
      3) Breaker Failure

Catawba Nuclear Station
2007 NRC Exam
Reactor Operator

Question 48

Bank Question: 07-48 ***Answer: C***

---

1 Pt(s). Which of the following describes the methods the operator will use for the following:

1) To identify if a ground exists using the Battery Ground Positive and/or Negative Leg Lamps
2) To determine the magnitude of the ground

A. 1) Lamp will be dimly lit
2) Battery Voltage to Ground Volt Meter Mode Selector Switch

B. 1) Lamp will be dimly Lit
2) Battery Ground Detector Test Switch

C. 1) Lamp will be brightly lit
2) Battery Voltage to Ground Volt Meter Mode Selector Switch

D. 1) Lamp will be brightly lit
2) Battery Ground Detector Test Switch

Distracter Analysis:

A. **Incorrect:**
Plausible: Dimly lit is the normal condition for the lamp with no ground. Correct switch

B. **Incorrect:**
Plausible: Dimly lit is the normal condition for the lamp with no ground. Switch is used by IAE and does not show the magnitude of the ground.

C. **Correct:**

D. **Incorrect**:
Plausible: Lamp correct but switch is used by IAE and does not show the magnitude of the ground.

Level: RO

K/A: SYSTEM: 063 DC Electrical Distribution System A2 Ability to (a) predict the impacts of the following malfunctions or operations on the DC electrical systems; and (b) based on those predictions, use procedures to correct, control, or mitigate the consequences of those malfunctions or operations: (CFR: 41.5 / 43.5 / 45.3 / 45.13)
A2.01 Grounds 2.5 3.2*

Catawba Nuclear Station
2007 NRC Exam
Reactor Operator

Question 48

Lesson Plan Objective: EPL17 Describe how a ground is indicated on the ground detection devices used at Catawba Nuclear Station

Source: NEW

Level of knowledge: Memory

References:
1. EPL Lesson
2.

D. Indications and Controls

1. Volt Meter

   a) Used to measure voltage to ground if a ground exists and the Battery Voltage to Ground Volt Meter Mode Selector Switch is taken to the "POS" or "NEG" position.

   b) Normally indicates zero DC volts.

2. Battery Ground Positive Leg and Battery Ground Negative Leg Lamps

   a) White lamps located under the Volt Meter.

   b) These lamps burn dimly under normal conditions and brightly under a battery ground condition.

3. Battery Voltage to Ground Volt Meter Mode Selector Switch

   a) Three position switch

      1) OFF

      2) NEG

      3) POS

   b) Used by the operator to determine the magnitude of a ground.

   c) If a ground exists, the Volt Meter will indicate the amount of volts to ground when this switch is taken to the NEG (measures volts to ground on the negative leg) or the POS (measures volts to ground on the positive leg).

4. Battery Undervoltage Relay

   a) During a bus undervoltage condition, this relay provides an alarm to both a control room annunciator via a reflash module and the Operator Aid Computer.

   b) No control functions are associated with this relay.

5. No. 27B Battery Undervoltage Relay Test Switch

   a) Two Position Switch

      1) NORM

      2) TEST

   b) In the TEST position, this switch inserts a resistor in the undervoltage relay circuit to drop voltage to the relay.

   c) When manipulated alarms will be generated in the control room via a reflash module.

   d) This switch is manipulated by I & E during periodic testing and should not be manipulated by Operations personnel.

6. Battery Ground Detector Test Switch
   a) Three position switch
      1) NORM
      2) NEG
      3) POS
   b) Depending on switch position (NEG or POS), a resistor is inserted between the ground detector input and either the positive or negative leg of the distribution center, thereby, simulating a battery ground condition.
   c) When manipulated, alarms will be generated in the control room via a reflash module.
   d) This switch is manipulated by I & E during periodic testing and should not be manipulated by Operations personnel.

8.4 Operation

A. Review the Limits and Precautions with latest copy of OP/1(2)/A/6350/008. (Obj. #18)

B. System Configuration

1. Normal Operation (Obj. #9)
   a) Each battery charger receives power from its 600 volt essential power source and supplies its 125 VDC Distribution Center. The batteries are floating on their respective buses.
   b) The 120 VAC Panelboards are being supplied by their respected channels inverter through the associated manual bypass switches.
   c) The standby charger is aligned for standby operation and the 120 VAC Regulated Power Supply is energized.
   d) 125 VDC Panelboards EDE and EDF are supplied from 1EDA/EDD and D/G 125 VDC Auxiliary Power Train A/B through auctioneering diode assemblies. The source of higher voltage will supply the Panelboard.
2. Abnormal Operation
   a) Battery charger removed from service (Obj. #10)
      1) Standby charger aligned to tie bkr buss for applicable trains charger with the individual channels tie breaker closed.
      2) ECA breaker to EDA is opened.
      3) The applicable train charger DC output and AC input bkrs are open.

Catawba Nuclear Station
2007 NRC Exam
Reactor Operator

Question 49

Bank Question: 07-49 ***Answer: A***

---

1 Pt(s). AP/1/A/5000/007 (Loss of Normal Power) Case II (Loss of All Power to an Essential Train) includes a step which states:

> **IF AT ANY TIME** any vital or auxiliary control channel battery charger has been de-energized for greater than 1 hour, **THEN** dispatch operators to locally control affected CA flow path. **REFER TO** Enclosure 16 (S/G Level Control).

What is the basis of this step?

A. Battery depletion may occur in 2 hours after loosing the charger causing the valves fail open with the potential to overfill the S/Gs.

B. Battery depletion may occur in 2 hours after loosing the charger causing the valves to fail closed with the potential of a Loss of Heat Sink.

C. Battery depletion may occur in 1 hour after loosing the charger causing the valves fail open with the potential to overfill the S/Gs.

D. Battery depletion may occur in 1 hour after loosing the charger causing the valves to fail closed with the potential of a Loss of Heat Sink.

Distracter Analysis:

A. **Correct:**

B. **Incorrect:**
Plausible: If the valves failed close this would be the concern.

C. **Incorrect:**
Plausible: 1 hour time is the amount of time the valves would operate without a supply of VI.

D. **Incorrect**:
Plausible: 1 hour time is the amount of time the valves would operate without a supply of VI. If the valves failed close this would be the concern.

Level: RO

K/A: SYSTEM: 063 DC Electrical Distribution System, A4 Ability to manually operate and/or monitor in the control room: (CFR: 41.7 / 45.5 to 45.8) A4.03 Battery discharge rate. . 3.0* 3.1

Lesson Plan Objective: None

Catawba Nuclear Station
2007 NRC Exam
Reactor Operator

Question 49
Source: NEW

Level of knowledge: memory

References:
1. AP/07
2.

ACTION/EXPECTED RESPONSE	RESPONSE NOT OBTAINED
13. **Control S/G levels as follows:**	
__ a. Verify CF flow - MAINTAINING STABLE S/G LEVELS.	a. Perform the following: __ 1) **REFER TO** Enclosure 16 (S/G Level Control). __ 2) **GO TO** Step 14.
__ b. **IF AT ANY TIME** CF flow control to S/Gs is lost, **THEN** perform Step 13.	
CAUTION **Battery depletion may occur as early as two hours. Battery depletion results in affected CA control valves failing full open. Failure to take local control of S/G level prior to battery depletion may result in S/G overfill.**	
__ c. **IF AT ANY TIME** any vital or auxiliary control channel battery charger has been de-energized for greater than 1 hour, **THEN** dispatch operators to locally control affected CA flow path. **REFER TO** Enclosure 16 (S/G Level Control).	

1. INTRODUCTION

NOTE: Throughout this document "Unit 1" and "A Train" are used for examples. "Unit 2" and "B Train" equipment is identical, except as noted.

1.1 Overview

A. This lesson will discuss the operation of the diesel and generator as well as cover the various control stations and operating modes available to the operator.

B. Each train of the 4160VAC Essential Auxiliary Power System is supplied with emergency standby power from an independent diesel generator rated for continuous operation at 7000 KW with added capability to operate at 7700 KW for a period of two hours out of every 24 hours of operation without affecting the life of the unit. The maximum loading on the diesel generators was limited to 5750KW pending resolution of Transamerica Delaval Owners' Group concerns and is reflected in both Tech Specs and station procedures.

C. The diesel generator operates to supply emergency power for the continued operation of specific important plant equipment and is designed to attain rated voltage and frequency and to accept load within 11seconds after receipt of a start signal. The characteristics of the generator exciter and voltage regulator provide satisfactory starting and acceleration of sequenced loads and ensure rapid voltage recovery when starting large motors.

1.2 Objectives

2. PRESENTATION

2.1 Purpose **(OBJ #1)**

A. To provide standby AC power to the equipment required to safely shutdown the reactor in the event of a loss of the normal power source.

B. To supply power to the safeguards equipment as required during a major accident coincident with a loss of the normal power source.

2.2 Functional Requirements

A. The Diesel Generator must be proven capable of:

1. Starting and reaching rated speed in less than or equal to 11 seconds.
2. Maintain voltage and frequency while loading.
3. Perform the above mentioned <u>without</u>:
   a) AC Power
   b) Operator Action

B. Required controls: Manual Local, Manual Remote, and Auto Control features.

Catawba Nuclear Station
2007 NRC Exam
Reactor Operator

Question 50

Bank Question: 07-50 ***Answer: A***

---

1 Pt(s). Diesel Generator load is administratively limited to _____ (1) ____ to prevent it from exceeding its overload value of _____ (2) ____ for 2 hours?

	(1)	(2)
A	5750 KW	7700 KW
B	5750 KW	8750 KW
C	7000 KW	7700 KW
D	7000 KW	8750 KW

Distracter Analysis:

Each train of the 4160VAC Essential Auxiliary Power System is supplied with emergency standby power from an independent diesel generator rated for continuous operation at 7000 KW with added capability to operate at 7700 KW for a period of two hours out of every 24 hours of operation without affecting the life of the unit. The maximum loading on the diesel generators was limited to 5750KW pending resolution of Transamerica Delaval Owners' Group concerns and is reflected in both Tech Specs and station procedures.

A. **Correct:**

B. **Incorrect:**
Plausible: Correct admin limit but 8750 is max amperage not load.

C. **Incorrect:**
Plausible: D/G rating not admin limit with correct max load.

D. **Incorrect**:
Plausible: D/G rating not admin limit with max amperage not load.

Level: RO

K/A: SYSTEM: 064 Emergency Diesel Generator (ED/G) System K4 Knowledge of ED/G system design feature(s) and/or interlock(s) which provide for the following: (CFR: 41.7) K4.04 Overload ratings 3.1 3.7

Lesson Plan Objective:

Source: NEW

Level of knowledge: Memory

Catawba Nuclear Station
2007 NRC Exam
Reactor Operator

Question 50

References:
1. DG3 Lesson.
2.

Catawba Nuclear Station
2007 NRC Exam
Reactor Operator

Question 51

Bank Question: 07-51 ***Answer: C***

---

1 Pt(s). Unit 1 was operating at 100% power when a leak on the RC piping in the turbine building resulted in increased input to the turbine building sump. All Turbine Building Sump Pumps are operating with sump level at less than emergency hi level when the following events occur.

- 1EMF-31 (Turbine Building Sump Monitor) TRIP-2 light is LIT due to a detector failure.
- 1RAD-1, F/5 (CABINET 1-2 TROUBLE) is LIT.

Which one of the following selections correctly describes:
1. The current status of the turbine building sump pumps, and
2. The action (if any) which is available to the Control Room team to continue with flood mitigation?

A. 1. Turbine building sump pumps continue to run.
2. No additional action is required.

B. 1. Turbine building sump pumps are off.
2. Manually start the turbine building sump pumps from the control room.

C. 1. Turbine building sump pumps are off.
2. Coordinate with RP to override 1EMF-31 and then restart the turbine building sump sumps.

D. 1. Turbine building sump pumps are off.
2. The turbine building sump pumps cannot be restarted. Contact maintenance to set up temporary pumps.

Distracter Analysis:
A 1EMF-31 detector failure will cause the above symptoms on the EMF module – which matches the K/A.

A **Incorrect**: The WP pumps trip on 1EMF-31 trip-2.
Plausible: Student may not remember auto action.

B .**Incorrect**: The module has suffered a detector failure causing a Trip-2 condition. The module cannot be reset with this failure.
Plausible: Other signals and actions can be "reset".

C. **Correct**:

D. **Incorrect**: The EMF signal can be overridden by coordination with RP – needs a key to reset.
Plausible: If the student is not aware of the override capability provided to EMF-31.

Catawba Nuclear Station
2007 NRC Exam
Reactor Operator

Question 51
Level: RO

K/A: SYSTEM: 073 Process Radiation Monitoring (PRM) System A2 Ability to (a) predict the impacts of the following malfunctions or operations on the PRM system; and (b) based on those predictions, use procedures to correct, control, or mitigate the consequences of those malfunctions or operations: (CFR: 41.5 / 43.5 / 45.3 / 45.13)
A2.02 Detector failure 2.7 3.2

Lesson Plan Objective: SS03 Discuss the Turbine Building Sump System Radiation Monitor Interlock: State its function, Describe the discharge flow path under these conditions and state how the discharge path is established

Source: MODIFIED (CNS 2004)

Level of knowledge: comprehension

References:
1.
2. HP/0/B1004/004
2. OP/1/B/6100/010X (A5)

A/5

1EMF-31 TURB BLDG SUMP HI RAD

SETPOINT: Per HP/0/B/1000/010 (Determination of Radiation Monitor Setpoints)

ORIGIN: 1EMF-31 gamma scintillation detector

PROBABLE CAUSE:

1. S/G tube leak resulting in contamination of S/G blowdown tank
2. High activity in VUCDT and 1WL-873 (VUCDT Disch To Turb Bldg) open
3. High activity in floor drain sump and 1WL-848 (Floor Drain Sump D Disch to Turb Bldg Sump) fails to close
4. Existing activity in the sump stirred up by large water inputs

AUTOMATIC ACTIONS: All turbine building sump pumps trip.

IMMEDIATE ACTIONS: Verify that all turbine building sump pumps tripped per digital computer points (C1D2281, C1D2282 and C1D2283).

SUPPLEMENTARY ACTIONS:

1. Notify Radiation Protection and Chemistry personnel of the alarm.
2. **IF** draining of major systems such as RC or CM/CF to the turbine building sump is in progress, terminate the draining activity until the problem with 1EMF-31 is cleared.
3. **IF** immediate action is required due to uncontrolled (i.e. heavy rain or pipe break) water inputs into the turbine building sump (WP), contact Radiation Protection personnel to discuss the following options per HP/0/B/1004/004 (Radioactive Liquid Waste Release):
   - Maintain EMF/WP pump status and wait for turbine building sump sample analysis.
   - Divert turbine building sump pump flow to the WL system.
   - Ensure the "In-Service" WC Hold-Up Pond(s) releases are secured and use Key 285 to "OVERRIDE" the EMF-31 alarm at 1TBOX0057 (TB-568, 1L-26).
4. **IF** aligned to turbine bldg sump, perform the following:
   - 4.1 Stop VUCDT pumps.
   - 4.2 Stop floor drain sump pumps.
   - 4.3 Secure S/G blowdown.
5. **IF** it is determined that the turbine building sump does **NOT** have high activity, and alarm has still **NOT** cleared, contact IAE to clean 1EMF-31 detector.

CONTINUED ON THE NEXT PAGE

Catawba Nuclear Station
2007 NRC Exam
Reactor Operator

Question 52

Bank Question: 07-52 ***Answer: C***

---

1 Pt(s). The crew is implementing EP/2/A/5000/E-0 (Reactor Trip or Safety Injection). The following EMFs are in trip 2:

- 2EMF-33 (Condenser Air Ejector Exhaust)
- 2EMF-38 (Containment Particulate)
- 0EMF-41 (Aux Bldg Ventilation)
- 2EMF-53A (Containment Trn A)

Which procedure should the crew implement following EP/2/A/5000/E-0 (Reactor Trip or Safety Injection)?

A. EP/2/A/5000/E-1 (Loss of Reactor or Secondary Coolant) due to 2EMF-38 (Containment Particulate)

B. EP/2/A/5000/E-1 (Loss of Reactor or Secondary Coolant) due to 2EMF-53A (Containment Trn A)

C. EP/2/A/5000/E-3 (Steam Generator Tube Rupture) due to 2EMF-33 (Condenser Air Ejector Exhaust)

D. EP/2/A/5000/ECA-1.2 (LOCA Outside Containment) due to 0EMF-41 (Aux Bldg Ventilation)

Distracter Analysis:

A. **Incorrect:**
Plausible: Would be correct with out 33 in T2.

B. **Incorrect:**
Plausible: Would be correct with out 33 in T2.

C. **Correct:**

D. **Incorrect**:
Plausible: This is the last EMF checked in E-0. Any of the others would come before this.

Level: RO

K/A: SYSTEM: 073 Process Radiation Monitoring (PRM) System 2.4 Emergency Procedures /Plan 2.4.31 Knowledge of annunciators alarms and indications, and use of the response instructions. (CFR: 41.10 / 45.3) IMPORTANCE RO 3.3 SRO 3.4

Catawba Nuclear Station
2007 NRC Exam
Reactor Operator

Question 52
Lesson Plan Objective: EP113 Explain the Bases, including any identified knowledges/abilities, for all of the steps, notes, and cautions in EP/1/A/5000/E-0 (Reactor Trip or Safety Injection).

Source: NEW

Level of knowledge: comprehension

References:
1. E-0
2.

ACTION/EXPECTED RESPONSE	RESPONSE NOT OBTAINED
24. **Verify main steamlines are intact as follows:** __ • All S/G pressures - STABLE OR INCREASING __ • ALL S/Gs - PRESSURIZED.	**IF pressure in any S/G is decreasing in an uncontrolled manner OR any S/G is depressurized, THEN perform the following:** a. **IF** both the following conditions exist, __ • Containment pressure - GREATER THAN 1 PSIG __ • Containment pressure - HAS REMAINED LESS THAN 3 PSIG __ **THEN** manually start one VX fan. **REFER TO** Enclosure 5 (VX Fan Manual Start). b. Concurrently: __ • Implement EP/1/A/5000/F-0 (Critical Safety Function Status Trees). __ • **GO TO** EP/1/A/5000/E-2 (Faulted Steam Generator Isolation).
25. **Verify S/G tubes are intact as follows:** • Verify the following EMF trip 1 lights - DARK: __ • 1EMF-33 (Condenser Air Ejector Exhaust) __ • 1EMF-26 (Steamline 1A) __ • 1EMF-27 (Steamline 1B) __ • 1EMF-28 (Steamline 1C) __ • 1EMF-29 (Steamline 1D). __ • All S/G levels - STABLE OR INCREASING IN A CONTROLLED MANNER.	**IF any EMF trip 1 light is lit OR any S/G level is increasing in an uncontrolled manner, THEN concurrently:** __ • Implement EP/1/A/5000/F-0 (Critical Safety Function Status Trees). __ • **GO TO** EP/1/A/5000/E-3 (Steam Generator Tube Rupture).

ACTION/EXPECTED RESPONSE	RESPONSE NOT OBTAINED
26. **Verify NC System is intact as follows:**	**Perform the following:**
__ • Containment pressure - LESS THAN 1 PSIG.	a. **IF** both the following conditions exist,
__ • **IF** normal off-site power is available, **THEN** verify containment pressure less than 0.3 PSIG.	__ • Containment pressure - GREATER THAN 1 PSIG
• Containment high range EMFs - LESS THAN 3 R/HR:	__ • Containment pressure - HAS REMAINED LESS THAN 3 PSIG
__ • 1EMF-53A (Containment Trn A) __ • 1EMF-53B (Containment Trn B).	__ **THEN** manually start one VX fan. **REFER TO** Enclosure 5 (VX Fan Manual Start).
• Containment EMF trip 1 lights - DARK:	b. Concurrently:
__ • 1EMF-38 (Containment Particulate) __ • 1EMF-39 (Containment Gas).	__ • Implement EP/1/A/5000/F-0 (Critical Safety Function Status Trees).
__ • Containment sump level - STABLE.	__ • **GO TO** EP/1/A/5000/E-1 (Loss Of Reactor Or Secondary Coolant).
27. **Verify S/I termination criteria as follows:**	
__ a. NC subcooling based on core exit T/Cs - GREATER THAN 0°F.	__ a. **GO TO** Step 28.
b. Verify secondary heat sink as follows:	__ b. **GO TO** Step 28.
__ • N/R level in at least one S/G - GREATER THAN 11% OR __ • Total feed flow to S/Gs - GREATER THAN 450 GPM.	
__ c. NC pressure - STABLE OR INCREASING.	__ c. **GO TO** Step 28.

ACTION/EXPECTED RESPONSE	RESPONSE NOT OBTAINED
31. **Verify auxiliary building radiation is normal as follows:** __ • EMF-41 (Aux Bldg Ventilation) trip 1 light - DARK __ • All area monitor EMF trip 1 lights - DARK.	**Evaluate cause of abnormal conditions as follows:** __ a. Monitor OAC EMF alarms, OAC VA Graphic, and area monitor EMFs to determine location of activity. __ b. Dispatch operator to locate potential leak. __ c. **IF** cause of alarm is LOCA outside containment, **THEN GO TO** EP/1/A/5000/ECA-1.2 (LOCA Outside Containment).
32. **Verify PRT conditions are normal as follows:** __ • PRT pressure - LESS THAN 8 PSIG __ • PRT level - LESS THAN 89% __ • PRT temperature - LESS THAN 130°F.	**Evaluate following possible causes of abnormal PRT conditions:** __ • Pzr safety temperatures __ • Pzr safety relief flow indicated __ • Pzr PORVs __ • Rx head vents __ • NC pump seal return header relief __ • Letdown orifice header relief.

Catawba Nuclear Station
2007 NRC Exam
Reactor Operator

Question 53

Bank Question: 07-53 ***Answer: D***

---

1 Pt(s). Which one of the following listed conditions will cause 2RN47A (RN SUPPLY X-OVER ISOL) to automatically close?

A. Phase B on either unit
Emergency low level in either pump house pit.

B. Unit 2 Phase B
Emergency low level in pump house pit A.

C. Phase B on either unit
Emergency start of either unit 2 emergency Diesel generator.

D. Unit 2 phase B
Emergency low level in pump house pit B.

Distracter Analysis:

RN Supply Crossover Isolation Valves (1&2RN47A and 48B)
The RN supply crossover isolation valves are normally open to supply cooling water to the non-essential header. Each valve closes upon a "Sp" Phase B Isolation signal from its respective unit.
The RN supply crossover isolation valves are also equipped with safety related interlocks to close upon emergency low level in the pump house pits.
Pit A Emergency Low Level will close: 1 and 2 RN48B
Pit B Emergency Low Level will close: 1 and 2 RN47A

A. **Incorrect**: Phase B on Unit 1 will not cause isolation
Plausible: believes either unit or pit level isolates the non-essential header.

B. **Incorrect**: emergency low level on pump house pit A will not cause isolation
Plausible: partially correct – if candidate believes 47A isolated due to pit A

C. **Incorrect**: emergency DG start will not cause isolation
Plausible: partially correct - if the candidate thinks that an emergency start of the DG should result in isolating the non-essential header

D. **Correct**:

Level: RO

K/A: SYSTEM: 076 Service Water System (SWS) K4 Knowledge of SWS design feature(s) and/or interlock(s) which provide for the following: (CFR: 41/7) K4.06 Service water train separation 2.8 3.2

Catawba Nuclear Station
2007 NRC Exam
Reactor Operator

Question 53

Lesson Plan Objective: RN11 Explain the action which takes place on:

- A Blackout
- An Emergency Low Pit Level
- A Safety Injection signal
- An Sp signal
- ASP to local

Source: BANK (CNS 2001)

Level of knowledge: Memory

References:
1.
2. RN Lesson

b) RN Supply Crossover Isolation Valves (1&2RN47A and 48B)

The RN supply crossover isolation valves are normally open to supply cooling water to the non-essential header.

1) Each valve closes upon a "S_p" Phase B Isolation signal from its respective unit.

2) The RN supply crossover isolation valves are also equipped with safety related interlocks to close upon emergency low level in the Pumphouse pits.

(a) Pit A Emergency Low Level will close:

(1) 1 and 2 RN48B

(b) Pit B Emergency Low Level will close:

(1) 1 and 2 RN47A

3) Powered from essential motor control centers.

D. Heat Exchanger Section

1. Essential Headers (Obj. #9)

a) Essential Header Components

Each RN essential header provides flow to a redundant set of safety related components and systems. Essential header pressure indication is provided in the control room with an alarm less than 46 psig, and essential header supply temperature indication is also provided. The following components and systems are served by each essential header:

1) Heat Exchangers:

(a) Diesel Generator Engine Jacket Water Cooler (KD Hx).

(b) Containment Spray Heat Exchanger (NS Hx)

(c) The Control Room Area Chiller (Condensers A and B are shared between units, so they are fed by Unit 1 essential headers only)

(d) Backup to Auxiliary Shutdown Panel Air Conditioning Unit (The ASPSUs are required for normal operational modes, including loss of offsite power, but are not required for safe shutdown following a LOCA) KC is normal supply.

(e) Component Cooling Hx (KC Hx)

ACTION/EXPECTED RESPONSE	RESPONSE NOT OBTAINED
4. **Establish VI to containment as follows:**	**Perform the following:**
__ • Ensure 1VI-77B (VI Cont Isol) - OPEN.	a. Align N_2 to the Pzr PORVs by opening the following valves:
__ • Verify VI pressure - GREATER THAN 85 PSIG.	__ • 1NI-438A (Emer N2 From CLA A To 1NC-34A)
	__ • 1NI-439B (Emer N2 From CLA B To 1NC-32B).
	__ b. **IF** VI pressure is less than 85 PSIG, **THEN** dispatch operator to ensure proper VI compressor operation.

ACTION/EXPECTED RESPONSE	RESPONSE NOT OBTAINED
__ 7. **Verify NC pressure - STABLE OR INCREASING.**	**Perform the following:** __ a. Ensure Pzr spray valves - CLOSED. __ b. **IF** NC pressure continues to decrease, **THEN GO TO** EP/1/A/5000/ES-1.2 (Post LOCA Cooldown And Depressurization).
__ 8. **Verify VI pressure - GREATER THAN 50 PSIG.**	**In subsequent steps, control room control is lost for the following valves and local operation will be required:** __ • 1NV-294 (NV Pmps A&B Disch Flow Ctrl) __ • 1NV-309 (Seal Water Injection Flow).
9. **Isolate NV S/I flowpath as follows:** a. Verify the following valves - OPEN: __ • 1NV-252A (NV Pumps Suct From FWST) __ • 1NV-253B (NV Pumps Suct From FWST).	a. **IF** NV pump suctions are aligned for Cold Leg Recirc, **THEN**: __ 1) Close 1NV-309 (Seal Water Injection Flow). 2) **IF** control of 1NV-309 is lost from the control room, **THEN** dispatch operator with radio to perform the following: __ a) Close 1NV-308 (Seal Wtr Inj Flow Ctrl Isol) (AB-554, JJ-54, Rm 233) (Ladder needed). __ b) Throttle 1NV-311 (Seal Wtr Inj Flow Ctrl Byp) (AB-555, JJ-54, Rm 233) to control seal injection flow as required in subsequent steps. 3) Open the following valves: __ • 1NV-312A (Chrg Line Cont Isol) __ • 1NV-314B (Chrg Line Cont Isol). (RNO continued on next page)

ACTION/EXPECTED RESPONSE	RESPONSE NOT OBTAINED
10. (Continued)	
	__ 7) **GO TO** Step 11.
__ b. Throttle 1NV-294 (NV Pmps A&B Disch Flow Ctrl) for 32 GPM charging line flow.	b. Perform the following: __ 1) Place the controller for 1NV-294 in the 100% demand position. __ 2) Dispatch operator with a radio to throttle 1NV-295 (NV Pmps A & B Disch Ctrl Isol) (AB-551, JJ-55, Rm 231) for 32 GPM charging line flow. __ 3) Throttle 1NV-295 to control charging flow as required in subsequent steps.
__ c. Close 1NV-309 (Seal Water Injection Flow).	c. Dispatch operator with radio to perform the following: __ 1) Close 1NV-308 (Seal Wtr Inj Flow Ctrl Isol) (AB-554, JJ-54, Rm 233) (Ladder needed). __ 2) Throttle 1NV-311 (Seal Wtr Inj Flow Ctrl Byp) (AB-555, JJ-54, Rm 233) to maintain 32 GPM seal water flow in subsequent steps.
d. Open the following valves: __ • 1NV-312A (Chrg Line Cont Isol) __ • 1NV-314B (Chrg Line Cont Isol).	d. Dispatch operator to open the affected valve(s): __ • 1NV-312A (Chrg Line Cont Isol) (AB-553, HH-JJ, 52, Rm 217) (Ladder needed) __ • 1NV-314B (Chrg Line Cont Isol) (AB-553, GG-HH, 52-53, Rm 217) (Ladder needed).
__ e. Verify 1NV-309 - ABLE TO BE OPERATED FROM THE CONTROL ROOM.	__ e. **GO TO** Step 10.g.
__ f. Place 1NV-309 in "AUTO".	

ACTION/EXPECTED RESPONSE	RESPONSE NOT OBTAINED
15. **Transfer condenser steam dump to pressure control mode as follows:**	
a. Verify condenser - AVAILABLE:	a. Perform the following:
__ • "C-9 COND AVAILABLE FOR STM DUMP" status light (1SI-18) - LIT.	__ 1) Dump steam using intact S/G PORV(s) in subsequent steps.
__ • MSIVs on intact S/G(s) - OPEN.	__ 2) **GO TO** Step 16.
__ b. Ensure "STM DUMP CTRL" pot - SET AT 8.43 (1090 PSIG STEAM HEADER PRESSURE).	
c. **WHEN** the steam dump valves are closed, **THEN**:	
__ 1) Reset C-7A and C-7B.	
__ 2) Place "STM DUMP CTRL" in manual.	
__ 3) Adjust the "STM DUMP CTRL" to 0% demand.	
__ 4) Place the steam dumps in pressure mode.	
__ 5) Place the "STM DUMP CTRL" in automatic.	
__ 16. **Verify all NC T-Hots - STABLE.**	__ **Throttle steam flow and total feed flow as required to maintain NC System temperatures stable.**
17. **Establish normal letdown as follows:**	
__ a. Verify VI pressure - GREATER THAN 35 PSIG.	a. Perform the following:
	__ 1) **WHEN** VI pressure is greater than 35 PSIG, **THEN** perform Steps 17.b through 17.o.
	__ 2) **GO TO** Step 18.

ACTION/EXPECTED RESPONSE	RESPONSE NOT OBTAINED
17. (Continued)	
__ b. Verify Pzr level - GREATER THAN 25% (34% ACC).	b. Perform the following: __ 1) **WHEN** Pzr level increases to greater than 25% (34% ACC), **THEN** perform Steps 17.c through 17.o. __ 2) **GO TO** Step 18.
c. Ensure the following valves - CLOSED: __ • 1KC-56A (KC To ND Hx 1A Sup Isol) __ • 1KC-81B (KC To ND Hx 1B Sup Isol).	
d. Verify the following EMF trip 1 lights - DARK: __ • 1EMF-53A (Containment Trn A) __ • 1EMF-53B (Containment Trn B).	d. Perform the following: __ 1) Notify station management to evaluate restoring normal letdown with high NC System activity. __ 2) Establish excess letdown. **REFER TO** Enclosure 2 (Establishing Excess Letdown). __ 3) **WHEN** station management approval to establish normal letdown is obtained, **THEN** perform Steps 17.e through 17.o. __ 4) **GO TO** Step 18.

Catawba Nuclear Station
2007 NRC Exam
Reactor Operator

Question 54

Bank Question: 07-54 ***Answer: A***

---

1 Pt(s). Given the following:

- Unit 1 has experienced a Reactor Trip.
- The Pressurizer PORV 1NC-34A opened and did not reclose.
- A Safety Injection was actuated.
- Subsequently, the PORV Isolation 1NC-33A was closed.
- The Crew has reset SI, Phase A and Phase B Containment Isolation and attempted to restore VI to Containment.
- 1VI-77B will not open.

Which ONE of the following describes the current status of the plant?

A. NV Charging is available but Letdown can NOT be restored.

B. NC PORVs and Sprays have lost all motive power.

C. NCP Seal Injection is available but Seal Return can NOT be restored.

D. NCP cooling water from KC can NOT be restored.

Distracter Analysis:

A. **Correct:**

B. **Incorrect:**
Plausible: Correct for NC Sprays but the PORVs have a N2 backup from CLA N2.

C. **Incorrect:**
Plausible: Correct for injection but seal return valves are all electrical.

D. **Incorrect**:
Plausible: KC valves to the NCP do not use VI.

Level: RO

K/A: 078 Instrument Air System (IAS) K3 Knowledge of the effect that a loss or malfunction of the IAS will have on the following: (CFR: 41.7 / 45.6) K3.01 Containment air system 3.1* 3.4*

Lesson Plan Objective: VI05 identify the major components served by the Instrument Air system and describe the effect on plant operations on a loss of Instrument Air

Source: BANK (Cook 2002)

Catawba Nuclear Station
2007 NRC Exam
Reactor Operator

Question 54
Level of knowledge: Memory

References:
1.
2. KC Flow Diagrams, NV Lesson, NC Lesson, IPE Lesson.

Catawba Nuclear Station
2007 NRC Exam
Reactor Operator

Question 55

Bank Question: 07-55 ***Answer: B***

---

1 Pt(s). Given the following:

- The Unit was at 100% power.
- A steam break occurred downstream of the Main Steam Isolation Valves.
- Safety injection occurred from Train "A" ONLY.

Which one of the following correctly describes the status of the containment isolations valves associated with Phase A and Phase B before any operator action(s)?

A. One valve in each Phase A line is closed; one valve in each Phase B line is closed.

B. One valve in each Phase A line is closed; all Phase B valves do not change position.

C. All Phase A valves are closed; all Phase B valves are closed.

D. All Phase A valves are closed; all Phase B valves do not change position.

Distracter Analysis:
Candidate must determine that a Sp or Phase B (3 psig in containment) will not occur on a SM break outside containment. An St or Phase A will occur but only the A train valves will move.

A. **Incorrect:**
Plausible:

B. **Correct:**

C. **Incorrect:**
Plausible:

D. **Incorrect**:
Plausible:

Level: RO

K/A: SYSTEM: 103 Containment System A3 Ability to monitor automatic operation of the containment system, including: (CFR: 41.7 / 45.5) A3.01 Containment isolation 3.9 4.2

Catawba Nuclear Station
2007 NRC Exam
Reactor Operator

Question 55
Lesson Plan Objective: CNT16 Describe the operation of the Containment Isolation ESF systems for a Phase 'A' Containment Isolation.

Source: BANK (Beaver Valley 2005)

Level of knowledge: Memory

References:
1.
2. ISE Lesson

Catawba Nuclear Station
2007 NRC Exam
Reactor Operator

Question 56

Bank Question: 07-56 ***Answer: D***

---

1 Pt(s). The Rod Control Logic and Power cabinets receive power auctioneered from which two sources?

A. ERPB and EPB

B. ERPB and RPB

C. M/G Sets and EPB

D. M/G Sets and RPB

Distracter Analysis:

A. **Incorrect**:
Plausible: Vital AC Bus and Vital DC bus

B. **Incorrect:**
Plausible: Vital AC Buss and Aux AC buss

C. **Incorrect:**
Plausible: M/G is correct with a Vital AC Buss.

D. **Correct:**

Level: RO

K/A: SYSTEM: 001 Control Rod Drive System K2 Knowledge of bus power supplies to the following: (CFR: 41.7) K2.03 One-line diagram of power supplies to logic circuits 2.7* 3.1

Lesson Plan Objective: None

Source: NEW

Level of knowledge: Memory

References:
1. IRE Lesson
2.

(e) Loose or missing circuit card.

2) Effects (Obj. #4, 12)

(a) De-energizes the Lift Coils and reduces the Stationary and 'selected' Moveable Gripper coils to reduced current in the affected cabinet. 'Selection' is automatically determined by the system based on the position of the Rod Bank Selector switch and the overlap logic. Only one group of Moveable Grippers will be selected at a time. (See OE item from Harris plant of 5/7/04).

(b) Lights Urgent Failure light on Power Cabinet.

(c) Energizes Rod Control Urgent Failure annunciator in Control Room.

(d) Stops all automatic and manual rod motion

(e) In the Power Cabinet with the failure, no rod motion is possible.

(f) In the cabinets without a failure, movement is possible with Bank Selector switch in Individual Bank Select position if the following condition is met:

(1) If the Rod Control System is in Auto or Manual when the alarm occurs, the system will "lock up" and no rod movement is possible in any cabinet until the Bank Selector Switch is placed in Individual Bank Select and the Alarm Reset pushbutton is depressed.

3) Must correct urgent alarm condition and "reset" failure detectors after "Urgent Failure Alarm". Provides momentary full current to Stationary Gripper coils to ensure they are latched prior to continuing rod motion. For this reason a Limit and Precaution states that this pushbutton should not be depressed for more than one second.

J. Logic and Power Cabinet Control Power Supplies

1. Two Power Sources

a) 120 VAC provided by output of M/G Sets

b) 240/120 VAC Auxiliary Control Power System (Panel RPB)

2. Auctioneering Circuit

a) Chooses the higher output source for use in control circuitry.

b) If dominant supply begins to fail, then the other supply takes over without loss of control.

3. Output of each supply monitored by Non-Urgent Alarm circuit.

Catawba Nuclear Station
2007 NRC Exam
Reactor Operator

Question 57

Bank Question: 07-57 ***Answer: A***

---

1 Pt(s). What is the basis for the NCP trip criteria of EP/1/A/5000/E-0 (Reactor Trip or Safety Injection)?

A. Tripping the NCP's during accident conditions is to prevent excessive depletion of NC water inventory which could lead to a severe core uncovery if the NCP's were tripped later in the accident.

B. NCP operation may result in masking of an Inadequate Core Cooling Condition resulting in a delayed entry into EP/1/A/5000/FR-C.1 (Response to Inadequate Core Cooling).

C. Tripping NCP's early results in a phase separation of Reactor Coolant System mass. This phase separation will then clearly show the void on RVLIS for further verification of Inadequate Core Cooling conditions.

D. Tripping NCP's prior to the hot leg saturation temperature being met will ensure natural circulation can be achieved during the Post-LOCA cooldown and depressurization.

Distracter Analysis:

A. **Correct:**

B. **Incorrect:**
Plausible: One indicator of a need to enter C.1 is low RVLIS level. With the pumps on this indicator may not be accurate as the NCP will pump two phase flow but with the NCP running this will provide cooling and not require entry into C.1

C. **Incorrect:**
Plausible: True if a large break but this is not the reason.

D. **Incorrect**:
Plausible: Reverse of the desire to leave the NCP on if possible for any cooldown.

Level: RO

K/A: SYSTEM 002 Reactor Coolant System (RCS) K3 Knowledge of the effect that a loss or malfunction of the RCS will have on the following: (CFR: 41.7) K3.02 Fuel 4.2 4.5

Lesson Plan Objective: EP113 Explain the Bases, including any identified knowledges/abilities, for all of the steps, notes, and cautions in EP/1/A/5000/E-0 (Reactor Trip or Safety Injection).

Source: BANK (Ginna 2004)

Catawba Nuclear Station
2007 NRC Exam
Reactor Operator

Question 57

Level of knowledge: Memory

References:
1.
2. EBG\E-0

STEP 2: NC Pump Trip Criteria:

PURPOSE:

To trip NC pumps if required conditions are satisfied consistent with ERG Executive Volume guidance on NC pump trip criteria.

To ensure that seal cooling flow is continued even if NC pumps are stopped.

APPLICABLE ERG BASIS:

The NC pump trip criteria should be monitored continuously while in the E-0 procedure. While the operator is in this procedure, it is generally early in the transient with higher decay heat levels present.

Forced loop flowrates induced by NC pump operation maintain the inner vessel mixture level above the hot leg nozzle elevation. This allows for continued circulation of liquid around the loops, providing a source of liquid to the break region. Therefore, continued NC pump operation prolongs the period of liquid break discharge as the NC System drains. The prolonging of the liquid break discharge further depletes the liquid mass inventory remaining in the NC System. Immediately following NC pump trip for these cases, loop flowrate decreases and steam-water phase separation occurs. A rapid reduction in NC System mixture level results, which may partially uncover the fuel. Prolonged NC pump operation and the resultant additional liquid mass depletion can greatly affect the degree and the duration of core uncovery. Depending on plant type and break size, a range of NC pump trip times may yield PCTs greater than the FSAR case result.

If NC pumps remain operational throughout the transient depletion of primary liquid mass is maximized. Nevertheless, PCTs remain well below FSAR case results due to enhanced core cooling caused by the high core steam flowrates indicative of NC pump operation. However, continuous operation of NC pumps during a LOCA cannot be guaranteed since tripping of the NC pumps would occur upon a loss of offsite power or other essential support conditions which can be postulated to occur at any time. The reason for purposely tripping the NC pumps during accident conditions is to prevent excessive depletion of NC System water inventory through a small break in the NC System which might lead to severe core uncovery if the NC pumps were tripped for some reason later in the accident. The NC pumps should be tripped before NC System liquid inventory is depleted to the point where tripping of the pumps would cause the break to immediately uncover.

It cannot be emphasized too strongly that a fundamental condition which must be satisfied for NC pump trip during an emergency condition is that at least one high pressure S/I pump be in operation and capable of delivering flow to the NC System. If this fundamental condition is not met, the NC pumps should not be tripped regardless of whether or not the trip setpoint (loss of subcooling) is reached. Analysis has shown that if the S/I system is not in operation, the NC pumps can be operated to provide core heat removal. As discussed in WCAP-9753, for SBLOCAs with the high head safety injection pumps not in operation, the NC pumps continue to provide core heat removal via the break and the S/Gs. With the NC pumps running, the NC System can safely be depressurized to the point where the accumulators and the ND pumps can ensure core heat removal before symptoms of Inadequate Core Cooling (ICC) are exhibited.

Continued On Next Page.

Catawba Nuclear Station
2007 NRC Exam
Reactor Operator

Question 58

Bank Question: 07-58 ***Answer: A***

---

1 Pt(s). Unit 1 is at 100% RTP.

Rod K-10 in Control Bank C Group 2 has a Data A failure.

An IAE technician asks to remove rod demand counters for Control Bank B group 1 and Control Bank C group 2 to transport them to the shop to repair the solenoid which causes the "click" when rods move.

Reference Provided

What is/are the required Tech Spec actions?

A. TS 3.1.7 actions C.1.1 and C.1.2

B. Enter TS 3.0.3 and be in Mode 3 in 7 hours

C. TS 3.1.7 actions A.1 or A.2 and C.2

D. TS 3.1.7 action D.1

Required reference: TS 3.1.7

Distracter Analysis:

A. **Correct:**

B. **Incorrect:**
Plausible: This is 3.0.3 and would be correct if 3.1.7 did not allow for separate entries into actions for demand counters.

C. **Incorrect:**
Plausible: This would be correct if both Data A and B were failed.

D. **Incorrect**:
Plausible: Misinterpretation of condition C and misapplication of 3.0.3. .

Level: RO

K/A: SYSTEM: 014 Rod Position Indication System (RPIS) 2.2 Equipment Control 2.2.24 Ability to analyze the affect of maintenance activities on LCO status. (CFR: 43.2 / 45.13) IMPORTANCE RO 2.6 SRO 3.8

Lesson Plan Objective: IRE19 Given a set of specific plant conditions and access to reference materials, determine the actions necessary to comply with Tech Specs/SLC's

Catawba Nuclear Station
2007 NRC Exam
Reactor Operator

Question 58
Source: NEW

Level of knowledge: comprehension

References:
1. TS 3.1.4 and TS 3.1.7
2.

3.1 REACTIVITY CONTROL SYSTEMS

3.1.7 Rod Position Indication

LCO 3.1.7 The Digital Rod Position Indication (DRPI) System and the Demand Position Indication System shall be OPERABLE.

APPLICABILITY: MODES 1 and 2.

ACTIONS

----------NOTE----------
Separate Condition entry is allowed for each inoperable rod position indicator per group and each demand position indicator per bank.

CONDITION	REQUIRED ACTION	COMPLETION TIME
A. One DRPI per group inoperable for one or more groups.	A.1 Verify the position of the rods with inoperable position indicators by using movable incore detectors.	Once per 8 hours
	OR	
	A.2 Reduce THERMAL POWER to ≤ 50% RTP.	8 hours
B. One or more rods with inoperable position indicators have been moved in excess of 24 steps in one direction since the last determination of the rod's position.	B.1 Verify the position of the rods with inoperable position indicators by using movable incore detectors.	4 hours
	OR	
	B.2 Reduce THERMAL POWER to ≤ 50% RTP.	8 hours

(continued)

ACTIONS (continued)

CONDITION	REQUIRED ACTION	COMPLETION TIME
C. One demand position indicator per bank inoperable for one or more banks.	C.1.1 Verify by administrative means all DRPIs for the affected banks are OPERABLE.	Once per 8 hours
	AND	
	C.1.2 Verify the most withdrawn rod and the least withdrawn rod of the affected banks are ≤ 12 steps apart.	Once per 8 hours
	OR	
	C.2 Reduce THERMAL POWER to ≤ 50% RTP.	8 hours
D. Required Action and associated Completion Time not met.	D.1 Be in MODE 3.	6 hours

SURVEILLANCE REQUIREMENTS

SURVEILLANCE		FREQUENCY
SR 3.1.7.1	Verify each DRPI agrees within 12 steps of the group demand position for the full indicated range of rod travel.	Once prior to criticality after each removal of the reactor head

Catawba Nuclear Station
2007 NRC Exam
Reactor Operator

Question 59

Bank Question: 07-59 ***Answer: D***

---

1 Pt(s). Which of the following EMFs, upon a high radiation signal (T2), will place the Spent Fuel Pool Cooling System (VF) into the Filter Mode?

1) 0EMF-41 (Aux Bldg Vent)
2) 1EMF-15 (Spent Fuel Bldg Refuel Bridge)
3) 1EMF-20 (New Fuel 1A)
4) 1EMF-21 (New Fuel 1B)
5) 1EMF-35 (Unit Vent Part Rad)
6) 1EMF-36 (Unit Vent Gas Rad)
7) 1EMF-37 (Unit Vent Iodine Rad)
8) 1EMF-42 (Fuel Hdlg Hi Gas Rad)

A. 1, 2, 5 and 8

B. 3, 4, 6 and 8

C. 1, 2, 3 and 4

D. 5, 6, 7 and 8

Distracter Analysis:

A. **Incorrect**:
Plausible: All EMF are plausible as they all are associated with the SFP, AB or Unit Vent.

B. **Incorrect:**
Plausible: All EMF are plausible as they all are associated with the SFP, AB or Unit Vent.

C. **Incorrect:**
Plausible: All EMF are plausible as they all are associated with the SFP, AB or Unit Vent.

D. **Correct:**

Level: RO

K/A: SYSTEM: 033 Spent Fuel Pool Cooling System (SFPCS) A1 Ability to predict and/or monitor changes in parameters (to prevent exceeding design limits) associated with Spent Fuel Pool Cooling System operating the controls including: (CFR: 41.5 / 45.5) A1.02 Radiation monitoring systems 2.8 3.3

Lesson Plan Objective: VF12 Describe actions due to alarms on EMF-35, 36 or 37 and EMF-42

Catawba Nuclear Station
2007 NRC Exam
Reactor Operator

Question 59

Source: NEW

Level of knowledge: Memory

References:
1. VF Lesson
2.

5. Filter assembly (exhaust train)
   a) Located in suction line to exhaust fan
   b) Construction (flow order)
      1) Prefilter
      2) Electric heater
      3) Absolute filter
      4) Carbon bed
      5) Absolute filter
   c) Normally bypassed
   d) Hi Temperature alarm - 220°F
   e) Hi-Hi Temp - 325°F
   f) Filters are placed in service for (Obj. # 5, 12)
      1) EMF-42 High Rad Trip 2 (Auto action)
      2) EMF-35, 36, 37 High Rad Trip 2 (Auto action)
      3) VC-YC switch to "local" position (Auto action)
      4) During movement of irradiated fuel assemblies in the fuel building by procedure
      5) For testing as required
      6) When EMF-42 is inoperable to comply with the associated SLC action
6. Controls (Obj. # 3)
   a) Start/stop pushbuttons (one per train)
   b) Trips/Interlocks (Obj. # 4)
      1) Interlocked so only one train can run at a time
      2) Trip on LOCA sequencer actuation
      3) Start if blackout occurs (load group 1)
      4) Although procedurally kept in the "closed" position, if their control switches are in "auto", the mini-flow cooling cross connect valves (VF-1A, VF-2B) will close when its respective exhaust train is started and open when its train is shutdown.
      5) VF system smoke detectors activate an alarm in the control room, but the exhaust fans continue to operate. They can be shutdown manually by the operator from the control room.
   c) Cross Train Interlock bypass switches - not used by CNS procedures.

Catawba Nuclear Station
2007 NRC Exam
Reactor Operator

Question 60

Bank Question: 07-60 ***Answer: A***

---

1 Pt(s). Unit 2 is being increased to full power following a refueling outage. During core on-load, a new fuel element that did NOT have a required burnable poison rod inserted was inadvertently loaded into the core.

Which one of the following parameters would be an indicator of the problem?

A. Quadrant power tilt ratio calculation will indicate high tilt condition

B. Actual critical boron would be less than calculated

C. Core AFD will be positive

D. Actual critical rod position would be higher than calculated

---

Distracter Analysis:

A. **Correct:**

B. **Incorrect:**
Plausible: Boron would have to be increased to make up for the lack of the BP rod.

C. **Incorrect:**
Plausible: BP rod partial or full would have either the opposite effect or no effect.

D. **Incorrect**:
Plausible: Critical rod height would be lower.

Level: RO

K/A: SYSTEM: 034 Fuel Handling Equipment System (FHES) A2 Ability to (a) predict the impacts of the following malfunctions or operations on the Fuel Handling System ; and (b) based on those predictions, use procedures to correct, control, or mitigate the consequences of those malfunctions or operations: (CFR: 41.5 / 43.5 / 45.3 / 45.13)
A2.03 Mispositioned fuel element 3.3
4.0

Lesson Plan Objective: PD02 (Discuss the effect of the fuel and burnable poison loading patterns on the radial power distribution.)

Source: BANK (Cook 2001)

Level of knowledge: comprehension

References:
1.

Catawba Nuclear Station
2007 NRC Exam
Reactor Operator

Question 62

Bank Question: 07-62 ***Answer: C***

---

1 Pt(s). Why does OP/1/A/6250/001 Condensate and Feedwater System enclosure for starting up the Feedwater system contain an initial condition to verify the LF System is in operation per OP/1/B/6250/012 (Feedwater Pump Turbine Oil System) when the CFPT is started using a different enclosure?

A. Allow time for the CFPT oil to warm up to operating temperature prior to starting the CFPT.

B. Electrically enable the Condensate Pumps to start.

C. Prevent damage to the CFPT due to condensate flow spinning the pumps.

D. Minimize the effects of cold seal water on CFPT bearings.

Distracter Analysis:

A. **Incorrect:**
Plausible: A possible valid operating concern but not the reason.

B. **Incorrect:**
Plausible: This is actually backward. The CBP pumps are required to get suction pressure high enough to start the CFPT.

C. **Correct:**

D. **Incorrect**:
Plausible: A possible valid operating concern but not the reason

Level: RO

K/A: 056 Condensate System K1 Knowledge of the physical connections and/or cause-effect relationships between the Condensate System and the following systems: (CFR: 41.2 to 41.9 / 45.7 to 45.8) K1.03 MFW 2.6* 2.6

Lesson Plan Objective: None

Source: BANK (Point Beach 2003)

Level of knowledge: comprehension

References:
1.
2.

1. Initial Conditions

____ 1.1 Review the Limits and Precautions.

____ 1.2 Verify the Condensate System is in operation per Enclosure 4.1 (Condensate System Startup).

____ 1.3 Verify the LF System is in operation per OP/1/B/6250/012 (Feedwater Pump Turbine Oil System) for the feedpumps that will be windmilled.

____ 1.4 Ensure that a written pre-job briefing has been performed per Site Directive 3.0.21 (Pre-job Briefing) that includes a discussion of reactivity management concerns with this procedure.

2. Procedure

____ 2.1 Ensure valves are aligned per Enclosure 4.14 (Feedwater Valve Checklist).

____ 2.2 Ensure valves are separately verified per Enclosure 4.15 (Separate Verification Checklist).

2.3 **IF** establishing sealwater flow to Feedwater Pump 1A, perform the following:

____ 2.3.1 Ensure CFPT Waterbox 1A is **NOT** drained per OP/1/B/6400/001 M (Drain and Fill Operations of Condenser Circulation Water System.

____ 2.3.2 Install sleeving on 1CL-19 (1A CF Pump Seal Leakoff Tank Drain) (TB-568, 1E-21) and route to a 5 gal. bucket containing oil pads near a floor drain.

____ 2.3.3 Close 1CL-25 (1A CF Pump Seal Leakoff Tank Level Control Inlet) (TB-568, 1D-21).

____ 2.3.4 Open 1CL-19 (1A CF Pump Seal Leakoff Tank Drain).

____ 2.3.5 Open 1CL-6 (1A CF Pump Seal Injection Strainer Inlet) (TB-594, 1E-19).

____ 2.3.6 As the seal leakoff tank drains, verify that there is no oil in the bucket overflow.

____ 2.3.7 At 1CFPTPA Control Panel, depress "OPEN" for "CFP 1/CL/35 CL DRN TO C HTR DRN TNK/COND"(TB-594, 1C-21).

____ 2.3.8 At the 1A CF Pump Sealwater Control Panel, adjust 1CLML5480 "1A CF PUMP INTERMEDIATE SEAL BLEEDOFF PRESSURE"(TB-594, 1D-21) clockwise to 100% on the scale.

____ 2.3.9 Adjust 1CLML5490 "1A CF PUMP 1A SEALWATER BLEEDOFF PRESS CONTROL TO C1 HEATER DRAIN" clockwise to 100% on the scale.

____ 2.3.10 Verify that 1CLPG5300 (1A CF Pump Sealwater Bleedoff Press to Main Cond/1C1 Htr Drn) stabilizes at 250-300 psig.

Catawba Nuclear Station
2007 NRC Exam
Reactor Operator

Question 63

Bank Question: 07-63 ***Answer: D***

---

1 Pt(s). When performing a Liquid Waste Release per OP/ 0/B/6500/113 (Operations Liquid Waste Release), what two conditions will independently cause the automatic closure of 1WL-124 (Waste Monit Tnk Pmps Disch)?

A. High radiation in the RN system and low RL discharge flow

B. High radiation in the WL system discharge to RN and low RN discharge flow

C. High radiation in the RN system and low RN discharge flow.

D. High radiation in the WL system discharge to RN and low RL discharge flow.

Distracter Analysis:

A. **Incorrect**:
Plausible: RN does have an EMF but it will not close 124. RL flow is correct.

B. **Incorrect:**
Plausible: Rad is correct but even though the WL disch is to RN this is not were flow is measured.

C. **Incorrect:**
Plausible: RN does have an EMF but it will not close 124 and even though the WL disch is to RN this is not were flow is measured.

D. **Correct:**

Level: RO

K/A: SYSTEM: 068 Liquid Radwaste System (LRS) A4 Ability to manually operate and/or monitor in the control room: (CFR: 41.7 / 45.5 to 45.8) A4.04 Automatic isolation 3.8 3.7

Lesson Plan Objective: WL03 (Discuss operation of the WL system for: Normal Alignment, Performing a normal liquid waste release, Filling and Draining various components)

Source: BANK (Braidwood 2002)

Level of knowledge: Memory

References:
1.
2. OP/ 0/B/6500/113

Catawba Nuclear Station
2007 NRC Exam
Reactor Operator

Question 64

Bank Question: 07-64 ***Answer: D***

---

1 Pt(s). Unit 1 control room has been evacuated.

The crew is operating at the Auxiliary Shutdown Panels (ASP) per AP/1/A/5500/017 (Loss of Control Room).

The ASP A & B panels, CA pump #1 panel, DG A & B panels and VC/YC panels have been placed in local.

1EMF-35 (Unit Vent Particulate Radiation) high alarm occurs (in trip 2)

Which of the following describes the status of the Unit 1 VA system after this alarm?

A. Filtered Exhaust Fans OFF
Unfiltered Exhaust Fans OFF
Supply Fans are tripped OFF

B. Filtered Exhaust Fans ON
Unfiltered Exhaust Fans OFF
Supply Fans are tripped OFF

C. Filtered Exhaust Fans ON
Unfiltered Exhaust Fans ON
Supply Fans are tripped OFF

D. Filtered Exhaust Fans ON
Unfiltered Exhaust Fans ON
Supply Fans are ON

Distracter Analysis:

A. **Incorrect**:
Plausible: Other ventilation systems trip on hi rad (VP).

B. **Incorrect:**
Plausible: Normally true except when VC/YC to local.

C. **Incorrect:**
Plausible: The intent of VA during normal condition (not ASP) is to maintain a negative pressure on the AB. This would accomplish this.

D. **Correct:**

Level: RO

Catawba Nuclear Station
2007 NRC Exam
Reactor Operator

Question 64

K/A: 072 Area Radiation Monitoring (ARM) System K4 Knowledge of ARM system design feature(s) and/or interlock(s) which provide for the following: (CFR: 41.7)
K4.03 Plant ventilation systems 3.2* 3.6*

Lesson Plan Objective: VA05 Describe the VA System response to the following…VC/YC to "LOCAL" …Trip 2 on 1EMF-41, EMF-35, 36, 37
Post LOCA mode

Source: NEW

Level of knowledge: comprehension

References:
1. VA Lesson
2.

VA AUTOMATIC ACTION SUMMARY CHART

CASUALTY/ACTION	RELATIONSHIP	AUTO ACTIONS
BLACKOUT	Unit/Train related	• ABFXF trips and restarts • ABUFXF (Manual start permissive in load group 13)ABSU trips and restarts with the ABUFXF is started • ASP cooling units trip and are restarted
Ss	Train Related	• ABFXF starts or keeps running if previously in service • ABUFXF trip • ABSU trip as a result of the trip of the associated ABUFXF
	Unit/Train	• ASP units tripped off and then restarted by sequencer.
	Unit Related	• Filter and Demineralizer Room Fan trips
VC/YC to 'LOCAL"	Train Related	• ABFXF starts or keeps running if previously in service • ABUFXF starts or keeps running if previously in service • ABSU starts or keeps running (dependent on the status of the associated ABUFXF) • All trips blocked except motor over load
EMF-41		• Alarm only. No automatic actions

VA AUTOMATIC ACTION SUMMARY CHART		
CASUALTY/ACTION	**RELATIONSHIP**	**AUTO ACTIONS**
EMF-35/36/37	Unit Related	• ABUFXF trip • ABSU trips as a result of the trip of the associated ABUFXF
POST LOCA	Train Related	• ABUFXF starts • ABSU starts • Non-essential dampers are open • ABFXF Vortex damper fully opens
TORNADO ACTUATION	Unit/Train Related	• ABFXF trip • ABUFXF trip due to trip of ABFXF • ABSU trip due to trip of ABUFXF • ABUFXF discharge tornado dampers close • ABSU inlet tornado dampers close • Tornado dampers close to isolate the Auxiliary Building from the Auxiliary Service Building (Unit 1 Train A switch) • VC/YC pressure filter train supply check dampers close

Catawba Nuclear Station
2007 NRC Exam
Reactor Operator

Question 65

Bank Question: 07-65 ***Answer: D***

---

1 Pt(s). The Fire Detection System (EFA) is aligned to the Unit 2 Operator Aid Computer (OAC) for monitoring. A loss of the Unit 2 OAC occurs.

Which of the following correctly states the required response to this loss of the OAC fire detection monitoring?

A. EFA OAC monitoring automatically swaps to the Unit 1 OAC.

B. EFA OAC monitoring must be manually swapped to the backup computer at the fire detection panel.

C. EFA OAC monitoring automatically swaps to the backup computer at the fire detection panel.

D. EFA OAC monitoring must be manually swapped to the Unit 1 OAC.

Distracter Analysis:

A. **Incorrect**: There is no Auto swap
Plausible: Monitoring will be performed using the Unit 1 OAC.

B. **Incorrect:** The loss of OAC OP directs the operator to perform a manual swap to the Unit 1 OAC.
Plausible: The fire detection panel and computer are available for EFA monitoring if necessary

C. **Incorrect:** The loss of OAC OP directs the operator to perform a manual swap to the Unit 1 OAC. There are no auto swaps.
Plausible: The fire detection panel and computer are available for EFA monitoring if necessary

D. **Correct:**

Level: RO

K/A: SYSTEM: 086 Fire Protection System (FPS) K6 Knowledge of the effect of a loss or malfunction on the Fire Protection System following will have on the: (CFR: 41.7 / 45.7) K6.04 Fire, smoke, and heat detectors 2.6 2.9

Lesson Plan Objective: EFA02 State the purpose of the major components of the EFA System: EFA Interface Switch Box

Source: NEW

Catawba Nuclear Station
2007 NRC Exam
Reactor Operator

Question 65
Level of knowledge: Memory

References:
1. OP/0/A/6400/035
2.

1. Initial Conditions

_____ 1.1 Review the Limits and Precautions.

_____ 1.2 Verify the Operator Aid Computer is out of service.

2. Procedure

_____ 2.1 Notify the Unit/WCC SRO who will notify the IAE department that the computer is out of service and needs to be returned to service as soon as possible.

2.2 Perform PT/1/A/4600/009 (Loss of Operator Aid Computer) until the computer is returned to service.

2.3 **IF** EFA Points are being monitored by the Unit 1 OAC **AND** Unit 2 OAC is available, swap to Unit 2 OAC per OP/0/A/6400/035 (Operations Fire Detection Console).

_____ 2.3.1 Verify that Unit 2 OAC is properly monitoring EFA Points per OP/0/A/6400/035 (Operations Fire Detection Console).

_____ 2.3.2 **WHEN** Unit 1 OAC is returned to service, swap to Unit 1 OAC per OP/0/A/6400/035 (Operations Fire Detection Console), as desired and discontinue monitoring of Fire Detection Console if applicable.

2.4 **IF** Unit 2 **AND** Unit 1 OAC are out of service:

_____ 2.4.1 **IF** in Modes 5, 6, or NO Mode, restore the Fire Protection Local Containment Alarm for the Reactor Building per OP/0/A/6400/002 A (Fire Protection System).

_____ 2.4.2 Begin continuously monitoring Fire Detection Console immediately.

2.4.3 **WHEN** either Unit OAC is returned to service:

_____ 2.4.3.1 Ensure Fire Detection Console is aligned to operable OAC per OP/0/A/6400/035 (Operations Fire Detection Console).

2.4.3.2 Ensure 2AD-13, D/5 "FIRE DETECTION SYSTEM ALERT" is reset (dark).

_____ 2.4.3.3 **WHEN** 2AD-13, D/5 "FIRE DETECTION SYSTEM ALERT" is reset (dark), discontinue monitoring of Fire Detection Console if applicable.

_____ 2.5 Ensure control room pressurization is maintained; refer to OP/0/A/6450/011 (Control Room Area Ventilation/Chilled Water System).

1. Initial Conditions

_____ 1.1 Review the Limits and Precautions.

_____ 1.2 It is desired to swap the Fire Detection Console output (EFA interface) from one unit's OAC to the other unit's OAC.

2. Procedure

NOTE: Normal alignment is for the Fire Detection Console output to be connected to Unit 2 OAC.

2.1 **IF** swapping from Unit 2 to Unit 1, perform the following:

_____ 2.1.1 Notify the OATC for both Units that the Fire Detection Console output (EFA interface) will be swapped from Unit 2 OAC to Unit 1 OAC and to expect alarms.

_____ 2.1.2 On Unit 1 OAC ensure that all fire gateway system points are restored to processing and restored to alarm by:

☐ 2.1.2.1 Execute command "GD :FIRESYS" to display all EFA gateway system points.

☐ 2.1.2.2 Review the display and ensure that no points are deleted from alarm or processing.

_____ 2.1.3 Perform the following inside the back of the OAC cabinet 2P1 (located on the Unit 2 side of the OAC room):

NOTE: The FIRE GATEWAY FAILURE alarm (OAC Point C2X6000) should alarm on Unit 2 OAC after the next step is performed.

☐ 2.1.3.1 Turn knob on the EFA Interface Switch Box (in the cabinet) to the "DISCONNECT" position.

NOTE: Wait ≥ 5 seconds before the following step to allow time for the EFA/OAC link to fail.

☐ 2.1.3.2 Turn knob on the EFA Interface Switch Box to the "UNIT 1 OAC" position.

_____ 2.1.4 On Unit 1 OAC:

☐ 2.1.4.1 Monitor the "EFAMAIN" graphic to verify that the FIRE GATEWAY FAILURE alarm (OAC Point C1X6000) clears (Qual = GOOD, Value = NO) after approximately a minute.

NOTE: At this point the EFA/OAC data link should be considered functional again in that new alarms can be processed.

☐ 2.1.4.2 After approximately twenty minutes, monitor the "EFAMAIN" graphic to verify that the FIRE DATABASE REFRESH FLAG (OAC Point C1X6040) clears (Qual = GOOD, Value = NO).

☐ 2.1.4.3 Execute command "GD :FIRE" to display all EFA points.

☐ 2.1.4.4 Select "F5 Print" button on screen.

☐ 2.1.4.5 Select "DISPLAY" button on screen.

☐ 2.1.4.6 Review the display and ensure that all points are restored to processing and restored to alarm, if appropriate (Qual does **NOT** equal DALM or DEL).

NOTE: The following step will allow the Process Systems group to enable PI archiving of the Unit 1 EFA data and disable the PI archiving of the Unit 2 EFA data.

_____ 2.1.5 Notify the RES Process Systems group that the Fire Detection Console (EFA interface) has been swapped from Unit 2 OAC to Unit 1 OAC.

Person notified:_____

NOTE: The Fire Detection Console output (EFA interface) is now aligned to Unit 1 OAC. The following step will return the Fire Detection Console output (EFA interface) to Unit 2 OAC.

2.2 **IF** swapping from Unit 1 to Unit 2, perform the following:

_____ 2.2.1 Notify the OATC for both Units that the Fire Detection Console output (EFA interface) will be swapped from Unit 1 OAC to Unit 2 OAC and to expect alarms.

_____ 2.2.2 On Unit 2 OAC ensure that all fire gateway system points are restored to processing and restored to alarm by:

☐ 2.2.2.1 Execute command "GD :FIRESYS" to display all EFA gateway system points.

☐ 2.2.2.2 Review the display and ensure that no points are deleted from alarm or processing.

_____ 2.2.3 Perform the following inside the back of the OAC cabinet 2P1 (located on the Unit 2 side of the OAC room):

NOTE: The FIRE GATEWAY FAILURE (OAC Point C1X6000) should alarm on Unit 1 OAC after the next step is performed.

☐ 2.2.3.1 Turn knob on the EFA Interface Switch Box (in the cabinet) to the "DISCONNECT" position.

NOTE: Wait ≥ 5 seconds before the following step to allow time for the EFA/OAC link to fail.

☐ 2.2.3.2 Turn knob on the EFA Interface Switch Box to the "UNIT 2 OAC" position.

_____ 2.2.4 On Unit 2 OAC:

☐ 2.2.4.1 Monitor the "EFAMAIN" graphic to verify that the FIRE GATEWAY FAILURE alarm (OAC Point C2X6000) clears (Qual = GOOD, Value = NO) after approximately a minute.

NOTE: At this point the EFA/OAC data link should be considered functional again in that new alarms can be processed.

☐ 2.2.4.2 After approximately twenty minutes, monitor the "EFAMAIN" graphic to verify that the FIRE DATABASE REFRESH FLAG alarm (OAC Point C2X6040) clears (Qual = GOOD, Value = NO).

☐ 2.2.4.3 Execute command "GD :FIRE" to display all EFA points.

☐ 2.2.4.4 Select "F5 Print" button o screen.

☐ 2.2.4.5 Select "DISPLAY" button on screen.

☐ 2.2.4.6 Review the display and ensure that all points are restored to processing and restored to alarm, if appropriate (Qual does **NOT** equal DALM or DEL).

NOTE: The following step will allow the Process Systems group to enable PI archiving of the Unit 2 EFA data and disable PI archiving of the Unit 1 EFA data.

_____ 2.2.5 Notify the RES Process Systems group that the Fire Detection Console (EFA interface) has been be swapped from Unit 1 OAC to Unit 2 OAC.

Person notified:_____

2.3 File this enclosure in the Control Copy folder of this procedure.

Catawba Nuclear Station
2007 NRC Exam
Reactor Operator

Question 66

Bank Question: 07-66 ***Answer: C***

---

1 Pt(s). IAE technicians are performing IP/0/B/3260/001 (Maintenance and Troubleshooting Procedure for Making changes to 1.47 Bypass System) at the local panel in the cable spreading room. They need the BOP to verify plant process information in the control room.

Which one of the following statements correctly describes how these communications should be conducted from the control room?

A. Communication should be over hand-held radios. Three-way communication procedures are required.

B. Communication should be over hand-held radios. Three-way communication procedures are NOT required.

C. Communication should be over plant telephones. Three-way communication procedures are required.

D. Communication should be over plant telephones. Three-way communication procedures are NOT required.

Distracter Analysis:

A. **Incorrect:** Radios should not be used from the cable spreading room.
Plausible: Partially correct – three-way communications are required when taking action effecting vital equipment.

B. **Incorrect:** Radios should not be used from the cable spreading room. Three-way communications are required when taking an action affecting installed plant equipment.
Plausible: Radios are generally used by maintenance for many routine communications. Some candidates might think that three-way communications are not required for routine maintenance actions (as opposed to plant operations).

C. **Correct:** Plant phones are used because radios may cause inadvertent actuation of plant equipment.

D. **Incorrect:** Three way communication must be used for any action affecting plant equipment.
Plausible: Partially correct - Some candidates might think that three-way communications are not required for routine maintenance actions (as opposed to plant operations.

Level: RO

K/A: 2.1 Conduct of Operations 2.1.17 Ability to make accurate, clear and concise verbal reports. (CFR: 45.12 / 45.13) IMPORTANCE RO 3.5 SRO 3.6

Catawba Nuclear Station
2007 NRC Exam
Reactor Operator

Question 66

Lesson Plan Objective: NSO112 Explain and apply NSD 509 "Communication Standards" and OMP 2-21 "Rules of Conduct", use of phones, and two-way radios.

Source: BANK (CNS 2003)

Level of knowledge: Memory

References:
1. NSD 509 pages 2, 7
2. OMP 2-22 page 3
2.

6. Rules of Conduct

6.1. To ensure effective communication, the requirements of NSD 509 (Site Standards in Support of Operational Focus) shall be strictly adhered to by all Operations personnel.

6.2. No communications system will be used for horseplay.

6.3. Abusive, threatening or offensive language shall not be used.

6.4. Unnecessary calls are to be avoided.

6.5. All conversations should be as brief as possible.

6.6. Outgoing personal phone calls shall not be made from Control Room phones except by those assigned to the Control Room. These should be minimized.

6.7. Radio operators should not transmit unnecessary or unidentified radio communications or signals.

6.8. Radio operators shall not transmit false or deceptive signals or communications.

6.9. Radio operators shall not willfully or maliciously interfere with or cause interference to any radio signal.

7. Use of Two-way Radios

7.1. Do not use two-way radios to transmit from the Control Room, Cable Spreading Room, or other areas where signs are posted against their use.

7.2. The two-way radios are for Operations Shift and Fire Brigade use. These radios are located at the Fire Brigade locker and Unit Supervisor Office.

7.3. If other groups are using the same radio channel, identify yourself clearly when giving or acknowledging instructions.

7.4. Other groups must obtain permission of an SRO prior to using radios.

A. Radios designated for Fire Brigade use should not be loaned for use to other groups.

7.5. Radios will be stored in the radio charging rack when not in use.

12. **Control Room and Control Room Area Informational Notes:** Informational notes shall only be used on control panels in the Control Room and Control Room area when authorized by and signed by designated Operations Supervision. Informational notes shall be for information only and shall never be used to circumvent or supplement approved procedures. However, place-keeping aids may be placed on instrumentation and procedures in accordance with OMP guidance
13. **Eating Meals in the Control Room:** Only personnel assigned to the Control Room will be allowed to eat meals there.(normally the Control Room SRO and Reactor Operators). The Control Room SRO can authorize other individuals to eat in the control room when necessary. (for example: Reactor Engineers during zero power physics testing) Food and drink shall be kept away from the control panels.
14. **Control Room Professionalism Criteria Evaluation:** Evaluation of Control Room professional standards shall be part of the Management/Supervisory Observation Program.

509.3 NUCLEAR SITE COMMUNICATION STANDARDS

509.3.1 COMMUNICATION STANDARDS

Use phonetics on the following systems, channels, and trains at all times and in any conversation;

- N-Charlie, N-Delta, and N-Victor systems – (MNS / CNS only)
- "A" Alpha, "B" Bravo, "C" Charlie, and "D" Delta channels
- "A" Alpha, "B" Bravo trains.

Use three-way communications when you are;

- Directing the manipulation of plant equipment
- Communicating the status of plant equipment directed to an individual.

Refer to Appendix A (Nuclear Site Communication Standard Examples) for examples of phonetic alphabet and 3-way communications use at MNS / CNS.

Refer to Appendix B (Nuclear Site Communications Standard Examples) for examples of phonetic alphabet and 3-way communications use at ONS.

509.4 ALARM MANAGEMENT STANDARD

509.4.1 CONTROL ROOM ALARM MANAGEMENT STANDARD

This standard applies to all alarms received in the Operations main Control Rooms (CR), including annunciators and computer alarms.

The Control Room SRO, Reactor Operator at the Controls (ROATC), and Balance of Plant Operator (BOP) are the Control Room crew members responsible for operating the plant and responding to emergencies and it is imperative that these crew members operate as a team. These team members must keep each other adequately informed of plant status at all times. Three-way communications must be used to communicate all expected and unexpected alarms.

When announcing alarms the operator shall call out either the name of the alarm or the activity causing multiple alarms.(examples: "reflash panel testing", "swapping RN pumps") When announcing an individual alarm paraphrasing of the alarm nomenclature is allowed. However, the exact nature of the alarm must be clearly conveyed.

Catawba Nuclear Station
2007 NRC Exam
Reactor Operator

Question 67

Bank Question: 07-67 ***Answer: C***

---

1 Pt(s). Which ONE of the following completes the description of the ECCS design basis single failure criteria for the injection phase of an accident?

The ECCS is designed to withstand any single _____ failure and still perform its intended safety function.

A. active

B. passive

C. active or passive

D. active and passive

Distracter Analysis:
Per Plant Design Basis Specification for the Plant Systems Single Failure:

Single Failure is defined in Reference 4.1.1 as -- "An occurrence which results in the loss of capability of a component to perform its intended safety functions. Multiple failures resulting from a single occurrence are considered to be a single failure. Fluid and electric systems are considered to be designed against an assumed single failure if neither (1) a single failure of any active component (assuming passive components function properly) or (2) a single failure of a passive component (assuming active components function properly), results in a loss of the capability of the system to perform its safety functions."

A. **Incorrect:**
Plausible:

B. **Incorrect:**
Plausible:

C. **Correct:**

D. **Incorrect**:
Plausible:

Level: RO

K/A: 2.1 Conduct of Operations 2.1.27 Knowledge of system purpose and or function. (CFR: 41.7) IMPORTANCE RO 2.8 SRO 2.9

Lesson Plan Objective: NONE

Source: BANK (Turkey Point 2003)

Catawba Nuclear Station
2007 NRC Exam
Reactor Operator

Question 67

Level of knowledge: Memory

References:
1.
2. Plant Design Basis Specification for the Plant Systems Single Failure

3. DESIGN BASIS

The references listed in Section 4.2, Section 4.3, and Section 4.4 document industry and NRC guidelines issued to aid utilities and NSSS suppliers in developing criteria for complying with the Single Failure Criterion as required by 10CFR50. Reference 4.4.13 states the position taken by the NSSS supplier, Westinghouse. Note, the NSSS design and single failure philosophy were developed prior to issuance of any of the industry standards. Therefore, the Duke Power/Catawba position is based partially on the Westinghouse philosophy and the philosophies presented in the references listed in Section 4.2, Section 4.3, and Section 4.4. In other words, there is no single industry document which, by itself, states the Duke Power/Catawba position on the application of the Single Failure Criterion.

3.1 DEFINITIONS

The definitions presented in this section are Catawba specific definitions adopted from industry standards or created by Duke Power Company. The definitions shall be consistent with, and apply to all Catawba Design Basis Documents (Systems, Structures, and Plant DBDs).

3.1.1

Single Failure is defined in Reference 4.1.1 as -- "An occurrence which results in the loss of capability of a component to perform its intended safety functions. Multiple failures resulting from a single occurrence are considered to be a single failure. Fluid and electric systems are considered to be designed against an assumed single failure if neither (1) a single failure of any active component (assuming passive components function properly) nor (2) a single failure of a passive component (assuming active components function properly), results in a loss of the capability of the system to perform its safety functions."

3.1.2

Active Failure: The failure of a powered component such as a piece of mechanical equipment, component of the electrical supply system or instrumentation and control equipment to act on command to perform its design function. Examples include the failure of a valve to move to its correct position, the failure of an electrical breaker or relay to respond, the failure of a pump, fan or diesel generator to start, etc.

Consideration of equipment moving spuriously from the proper safeguards position, such as a motor-operated valve inadvertently shutting, is specifically excluded.

3.1.3

Passive Failure: The structural failure of a static component which limits that component's effectiveness in carrying out its design function. When applied to a Westinghouse designed fluid system, this means a break in the pressure boundary resulting in abnormal leakage not exceeding 50 gpm for 30 minutes. Such leak rates are consistent with limited cracks in pipes, sprung flanges, valve packing leaks, pump seal failures, check valve failures, etc. In the absence of specific safety commitments this value should be assumed when evaluating the effect of such "passive failures" on ECCS performance.

Catawba Nuclear Station
2007 NRC Exam
Reactor Operator

Question 68

Bank Question: 07-68 ***Answer: A***

---

1 Pt(s). Which of the following must be considered a Temporary Modification?

A. Installation of a blank flange which is not a design feature of a system.

B. Temporary lighting derived from area receptacles

C. Temporary drains lines on equipment not required operable

D. Wiring connections to permanent test points.

Distracter Analysis:

Per Section 7.0 of the MOD Manual Attachment 7.2:

The following activities may be excluded from the requirements of the Temporary Mod process…

2) Pipe caps or flanges provided to stop manual vent or drain valve leakage. Installation of a blank flange that is not a design feature of a system, even to establish an isolation boundary, is considered a TM (ref. PIP C-01-01729).

3) Temporary drain lines on non-safety related systems or safety related systems, not required to be operable, that are used to drain a system or component by directing flow to a sump or non-safety related atmospheric waste storage tank may be excluded. Multiple drain line to a common drain header may <u>NOT</u> be excluded (contact System Engineer).

4) ….

5) ….

6) Temporary lighting derived from area receptacles.

7) ….

8) …

9) ….

10) ……

11) Tubing, piping or wiring connections made to permanent test points, sample points, or patch panels which are intended for that purpose.

A. **Correct:**

B. **Incorrect:**
Plausible:

C. **Incorrect:**
Plausible:

Catawba Nuclear Station
2007 NRC Exam
Reactor Operator

Question 68

D. **Incorrect**:
Plausible:

Level: RO

K/A: 2.2 Equipment Control 2.2.11 Knowledge of the process for controlling temporary changes. (CFR: 41.10 / 43.3 / 45.13) IMPORTANCE RO 2.5 SRO 3.4*

Lesson Plan Objective: NONE

Source: NEW

Level of knowledge: Memory

References:
1. Mod Manual
2.

Attachment 7.2
Page 1 of 2

Temporary Modification Exclusions

The following activities may be excluded from the requirements of the Temporary Mod process; however, related procedures affected by the work activity should be reviewed to determine the impact the activity will have on plant operating systems and indications (ref. PIP C-99-0329): Reference Section 7.19 (Temporary Modification Exclusions) for further clarification.

1) Activities associated with testing, operation, or maintenance under the direction of an approved procedure may be excluded from the requirement of the **TM** process if the procedure includes appropriate steps for installation and removal of the temporary change.

   These steps include:
   a) Notification to the group having operational control of the system when temporary changes are installed or removed.
   b) Documentation of the installation / removal of temporary changes.
   c) Double verification (ref. NSD700) or functional testing when temporary changes are installed or removed.

2) Pipe caps or flanges provided to stop manual vent or drain valve leakage. Installation of a blank flange that is not a design feature of a system, even to establish an isolation boundary, is considered a TM (ref. PIP C-01-01729).

3) Temporary drain lines on non-safety related systems or safety related systems, not required to be operable, that are used to drain a system or component by directing flow to a sump or non-safety related atmospheric waste storage tank may be excluded. Multiple drain line to a common drain header may NOT be excluded (contact System Engineer).

4) Temporary tygon tubing connected to a non-safety related system providing the tygon tubing is normally isolated and is vented to atmosphere either directly or indirectly. In instances where the tygon tubing is not isolated from the system, control must be provided by the use of a procedure or **TM**.

5) Temporary power derived from Retail supplied power sources or power sources supplied by welding receptacles and using convenience outlets.

6) Temporary lighting derived from area receptacles.

7) Scaffolding and Lead Shielding (ref. CSD 3.8.12)

8) Temporary rigging loads applied to structures, piping, and pipe supports that have been evaluated by Engineering.

9) Leak repair to piping components not listed as Class A, B, or C which are repaired under an approved procedure (MP/0/A/7650/063) and the operation of the system or component is not affected.

10) The addition of a clamp and rubber or plug to contain (stop) the leak from spraying and/or the addition of drip bags (to redirect the leak) on any Duke Class piping. These items are tagged in accordance with NSD 104.

11) Tubing, piping or wiring connections made to permanent test points, sample points, or patch panels which are intended for that purpose.

Catawba Nuclear Station
2007 NRC Exam
Reactor Operator

Question 69

Bank Question: 07-69 ***Answer: C***

---

1 Pt(s). Unit 1 is in Mode 4 with the following equipment status:

- 1A ND is operable
- 1B ND in INOPERABLE
- All other equipment is operable

Which of the following states the logging requirements for the above situation?

A. TS LCO 3.5.3 (ECCS – Shutdown) is not met and is required to logged in TSAIL.

B. TS LCO 3.5.3 (ECCS – Shutdown) is not met and is NOT required to logged in TSAIL.

C. Tracking item for TS 3.5.3 (ECCS - Shutdown) which is required to be logged in TSAIL

D. Tracking item for TS 3.5.3 (ECCS – Shutdown) which is NOT required to be logged in TSAIL

Distracter Analysis:

A. **Incorrect:**
Plausible: 3.5.3 requires one train not 2.

B. **Incorrect:**
Plausible: 3.5.3 requires one train not 2 and must be logged if not met.

C. **Correct:**

D. **Incorrect**:
Plausible: Lower mode inoperabilities do not have to be logged unless redundant to required operable equip.

Level: RO

K/A: 2.2 Equipment Control 2.2.23 Ability to track limiting conditions for operations. (CFR: 43.2 / 45.13) IMPORTANCE RO 2.6 SRO 3.8

Lesson Plan Objective: TS11 Given a set of specific plant conditions, and access to reference materials, determine the actions necessary to comply with Tech Specs/SLC's.

Source: NEW

Level of knowledge: comprehension

Catawba Nuclear Station
2007 NRC Exam
Reactor Operator

Question 69

References:
1. 3.5.3
2.

5. Reporting Requirements

Refer to RP/0/B/5000/13, NRC Notification Requirements.

6. General Instructions

6.1. A separate TSAIL shall be maintained for each unit.

6.2. Items affecting both units shall be entered in both unit's TSAIL or entered as a "SHARED" TSAIL item when not unit-specific.

6.3. Normally, all logging shall be done by the TSAIL computer; however, if the computer is unavailable, all entries shall be tracked on a current TSAIL printout until the computer can be updated.

6.4. All entries shall be made in chronological order at the actual time of the inoperability or when knowledge of the inoperability is received.

6.5. Any unplanned entry into a Tech Spec or SLC action statement shall require a PIP. A planned entry is defined as an entry made to support normally scheduled work activities. Anything that is found outside the scope of the originally planned work is to be considered an unplanned TSAIL entry.

6.6. The following items should be logged:

A. Non-compliance with a LIMITING CONDITION FOR OPERATION (LCO) requiring operation in an action statement for the existing MODE.

B. Inoperable redundant equipment not required in the existing mode but which would place the unit(s) in an action statement if the operable (opposite) train were to become inoperable.

EXAMPLE: In Modes 5 and 6, one NV pump and boration flow path are required to be operable; however, when either NV pump becomes inoperable, it should be logged. This flags the operator to not rely on the redundant train to meet Tech Specs if the operable train becomes inoperable.

3.5 EMERGENCY CORE COOLING SYSTEMS (ECCS)

3.5.3 ECCS — Shutdown

LCO 3.5.3 One ECCS train shall be OPERABLE.

APPLICABILITY: MODE 4.

ACTIONS

----------NOTE----------
LCO 3.0.4.b is not applicable to ECCS centrifugal charging subsystem.

CONDITION		REQUIRED ACTION		COMPLETION TIME
A.	Required ECCS residual heat removal (RHR) subsystem inoperable.	A.1	Initiate action to restore required ECCS RHR subsystem to OPERABLE status.	Immediately
B.	Required ECCS centrifugal charging subsystem inoperable.	B.1	Restore required ECCS centrifugal charging subsystem to OPERABLE status.	1 hour
C.	Required Action and associated Completion Time of Condition B not met.	C.1	Be in MODE 5.	24 hours

SURVEILLANCE REQUIREMENTS

SURVEILLANCE		FREQUENCY
SR 3.5.3.1	----------NOTE---------- An RHR train may be considered OPERABLE during alignment and operation for decay heat removal, if capable of being manually realigned to the ECCS mode of operation. ---------- The following SRs are applicable for all equipment required to be OPERABLE: SR 3.5.2.1 SR 3.5.2.7 SR 3.5.2.3 SR 3.5.2.8 SR 3.5.2.4	In accordance with applicable SRs

Catawba Nuclear Station
2007 NRC Exam
Reactor Operator

Question 61

Bank Question: 07-61 ***Answer: B***

---

1 Pt(s). As turbine load increases from 610 MW to 1220 MW, how and why does the moderator temperature coefficient change?

A. More negative due the change in reactor power

B. More negative due to change in boron concentration.

C. Less negative due the change in reactor power

D. Less negative due to change in boron concentration.

Distracter Analysis:

A. **Incorrect:**
Plausible: Correct value but power is part of the isothermal temperature coefficient.

B. **Correct:**

C. **Incorrect:**
Plausible: Opposite direction of change and power is part of the isothermal temperature coefficient.

D. **Incorrect**:
Plausible: Opposite direction of change with the correct reason.

Level: RO

K/A: SYSTEM 045 Main Turbine Generator (MT/G) System K5 Knowledge of the operational implications of the following concepts as the apply to the MT/B System: (CFR: 41.5 / 45.7) K5.17 Relationship between moderator temperature coefficient and boron concentration in RCS as T/G load increases 2.5* 2.7*

Lesson Plan Objective: RCO04 Describe the effects of changing power, moderator temperature, Boron Concentration or core life has on: Moderator temperature coefficient and Power Coefficient

Source: NEW

Level of knowledge: Memory

References:
1. RCO
2.

Catawba Nuclear Station
2007 NRC Exam
Reactor Operator

Question 70

Bank Question: 07-70 ***Answer: C***

---

1 Pt(s). Given the following:

- Unit 1 is operating at 100%
- The final feedwater temperature input to the thermal power best estimate (TPBE) was incorrectly calibrated to 7°F less than actual feedwater temperature
- Calibration of the power range nuclear instruments (NIs) are being performed

How will TPBE power compare to actual thermal power and how will adjustment of the NIs be affected using the calculated value of TPBE?

A. TPBE is lower than actual power.
NI adjustment will be less conservative.

B. TPBE is higher than actual power.
NI adjustment will be less conservative.

C. TPBE is higher than actual power.
NI adjustment will be more conservative.

D. TPBE is lower than actual power.
NI adjustment will be more conservative.

Distracter Analysis:
Due to FFW temperature being 7 degrees higher than indicated/calibrated, TPBE calculation will indicate higher than actual thermal power. This will cause NI calibration to result in setpoints that are more conservative (i.e. closer to the trip setpoint).

A. **Incorrect:**
Plausible:

B. **Incorrect:**
Plausible:

C. **Correct:**

D. **Incorrect**:
Plausible:

Level: RO

K/A: 2.2 Equipment Control 2.2.34 Knowledge of the process for determining the internal and external effects on core reactivity. (CFR: 43.6) IMPORTANCE RO 2.8 SRO 3.2*

Catawba Nuclear Station
2007 NRC Exam
Reactor Operator

Question 70

Lesson Plan Objective: TPBE03 State the effect on Actual vs. Indicated power if inputs to the calculation are changed.

Source: BANK (CNS 2004)

Level of knowledge: comprehension

References:
1. TPBE
2.

$$Q_{SEC(D)}=(Q_{CF(D)}+Q_{CA(D)}+Q_{SECLOSS}-Q_{NCP(D)}-Q_{BB(D)}-Q_{CHARGED(D)}-Q_{SEALS(D)})/K_{BTU}$$

2. Where:

Variable	Description	Value	Units
$Q_{SEC(LOOP)}$	NC Loop Secondary Thermal Power	n/a	MW
$Q_{CF(LOOP)}$	Loop Feedwater Thermal Power	n/a	Btu/hr
$Q_{CA(LOOP)}$	Loop Aux Feedwater Thermal Power	n/a	Btu/hr
Q_{LD}	Letdown Thermal Power	n/a	Btu/hr
$Q_{EXCESS\ L/D}$	Excess Letdown Thermal Power	n/a	Btu/Hr
$Q_{SECLOSS}$	Sec Heat Losses Per Loop	1.136E6	Btu/hr
$Q_{NCP(LOOP)}$	Loop Primary Coolant Pump Heat Addition	n/a	Btu/hr
$Q_{BB(LOOP)}$	Loop Blowdown Heat Addition	n/a	Btu/hr
$Q_{CHARGE(LOOP)}$	Loop Charging Heat Addition	n/a	Btu/hr
$Q_{SEALS(LOOP)}$	Loop Seal Injection Heat Addition	n/a	Btu/hr

3. Each loop is calculated differently based on what is either added to that loop or taken out of that loop. For instance, all Letdown (normal and excess) comes from Loop C, therefore, that amount of energy must be added back into the calculation for that loop for the calculation to become more accurate. Each input into the calculations must then be calculated to ensure accuracy.

4. Loop Feedwater Thermal Power - is determined as a function of the feedwater flow and the difference between the steam and feedwater enthalpies. This input is added to the calculation for each loop.

5. Loop Final Feedwater Enthalpy - is determined as a function of average feedwater temperature at loop feedwater pressure. The pressure used is adjusted for elevation and losses associated with differences between the sensor location and the actual S/G inlet.

   a) Several instrumentation malfunctions will cause an error in this portion of the calculation. Any feedwater temperature detector failure or feedwater pressure transmitter to any loop will cause this to become suspect.

1) If a feedwater temperature instrument were to fail low, the enthalpy of the feedwater would erroneously input to the TPBE calculation as lower that actual. This would cause the calculation to indicate higher than actual.

2) If a feedwater pressure instrument were to fail, the resultant change in TPBE would depend on the change in calculated enthalpy caused by the pressure failure. Enthalpy change is not directly related to pressure as a temperature failure would be. The Mollier diagram would need to be referenced to provide the correct direction and magnitude of the failure on the calculation.

6. Auxiliary Feedwater Thermal Power - is determined as a function of the auxiliary feedwater flow and the difference between the steam and auxiliary feedwater enthalpies. The auxiliary feedwater flow represents all feedwater flow that is not included in the main feedwater flow. The value for this input is added to the calculation for each loop.

$$Q_{AUXFW(LOOP)}=WAFW_{LOOP}(HS_{LOOP}-HAFW_{LOOP})$$

a) Where:

Variable	Description	Units
$WAFW_{LOOP}$	Loop Aux Feedwater Flow	MLBH
$HAFW_{LOOP}$	Loop Aux Feedwater Enthalpy	Btu/Hr

b) A CA flow transmitter failing high in any loop will cause that loop's aux feedwater thermal power to be calculated as higher than actual which will cause the secondary thermal power for that loop to be calculated at a higher value. This in turn will cause thermal power best to be calculated at a higher value.

1) A CA temperature transmitter failing high in any loop will cause that loop's thermal power to be calculated as lower than actual due to the erroneously high enthalpy indication of that loop. This in turn will cause TPBE to be calculated at a lower value.

2) Enthalpy of CA is determined via CA temperature and CF pressure. Therefore a CF pressure failure would have the same result on TPBE as it would with loop final feedwater enthalpy.

2. If an instrument failure occurs causing the TPBE calculation to be erroneous and a subsequent NI calibration is made, this will cause the NI indication to be incorrect.

   a) If TPBE is indicating higher than actual due to a failure and NI's are calibrated to this indication, the NI's will indicate higher than actual. This will cause the NI's to reach a trip setpoint sooner than actually required. This would be a conservative action in respect to actual reactor power.

   b) If TBPE is indicating lower than actual due to a failure and NI's are calibrated to this indication, the NI's will indicate lower than actual. This will cause the NI's to reach a trip setpoint later than actually required. This would be a non-conservative action in respect to actual reactor power.

3. Thermal power indications should be compared to all power references to ensure calculations are correct. Some of these indications are: (Obj #4)

   a) Intermediate Range Excore Nuclear instruments

   b) Core delta temperature

   c) Steam flow/Feed flow

   d) Power Range Excore Nuclear instruments

   e) At power we have seen that a one-degree increase in Tave will cause the excore indication to increase by approximately 0.75% and a one-degree decrease in Tave will cause the excore indication to decrease by approximately 0.75%.

      1) If this causes excore power indication to exceed 100%(e.g. when a dilution is occurring at 100% power) that doesn't mean we have exceeded 3411 MWth license limit. We need to use our Thermal Power Best Estimate to determine if we have exceeded our license limit.

      2) If a temperature decrease occurs causing a positive reactivity addition power will increase, but because of the decreased leakage the excore indication will not increase as much as real power is increasing.

         (a) It is imperative that the operator use all diverse indications(e.g. delta T and after short period of time thermal best estimate) in a transient

Catawba Nuclear Station
2007 NRC Exam
Reactor Operator

Question 71

Bank Question: 07-71 ***Answer: A***

---

1 Pt(s). During a plant emergency an operator receives a radiation exposure of 10 REM to the lenses of both eyes.

Regarding 10 CFR 20, "Standards for Protection Against Radiation" and Duke Energy administrative radiation control limits (Basic and Maximum), which, if any, of these limits have been exceeded?

A. No exposure limits have been exceeded.

B. Duke Basic Administrative Control Limit only, has been exceeded, but NOT 10CFR20 or Duke Maximum Administrative Control limits.

C. Duke Basic and Maximum Administrative Control Limits have been exceeded but NOT the 10CFR20 limits

D. Duke Basic and Maximum Administrative Control Limits and the 10CFR20 limits have all been exceeded.

Distracter Analysis:

Exposure	**NRC(10CFR20) Limits**	**Duke Basic Administrative Control**	**Duke Maximum Administrative Control**
Adult Total Effective Dose Equivalent (TEDE)	5.0 rem/year	2.0 rem/year	5.0 rem/year
Adult Lens Dose Equivalent (LDE) (Lens of Eye)	15.0 rem/year		15.0 rem/year

A. **Correct:**

B. **Incorrect:**
Plausible: Basic limit is 2.0 but that is TEDE not LDE

C. **Incorrect:**
Plausible: DE Max for TEDE is 5.0.

D. **Incorrect**:
Plausible: NRC limits for TEDE is 5.0

Level: RO

Catawba Nuclear Station
2007 NRC Exam
Reactor Operator

Question 71

K/A: 2.3 Radiation Control 2.3.1 Knowledge of 10 CFR: 20 and related facility radiation control requirements. (CFR: 41.12 / 43.4. 45.9 / 45.10) IMPORTANCE RO 2.6 SRO 3.0

Lesson Plan Objective: HP02 List the 10CFR20 and Duke Energy Administrative External and Internal Dose Limits for the following…Lens of the Eye

Source: Modified (Indian Point 2004)

Level of knowledge: comprehension

References:
1. 10CFR20 and GET
2.

Exposure	NRC(10CFR20) Limits	Duke Basic Administrative Control	Duke Maximum Administrative Control
Adult Total Effective Dose Equivalent (TEDE)	5.0 rem/year	2.0 rem/year	5.0 rem/year
Adult Lens Dose Equivalent (LDE) (Lens of Eye)	15.0 rem/year		15.0 rem/year
Adult Shallow-Dose Equivalent (SDE) Skin	50 rem/year		50 rem/year
Adult Shallow-Dose Equivalent (SDE) Extremities	50 rem/year		50 rem/year
Any Internal Organ (CDE) (for example, thyroid)	50 rem/year		50 rem/year
Minors (less than 18 years of age)	10% of adult limit and may not enter a High Radiation Area		2% of adult and may not enter a High Radiation Area
Declared Pregnant Worker (TEDE)	500 mrem/pregnancy	50 mrem/month	500 mrem/pregnancy
Planned Special Exposure (PSE)	Lifetime PSE limits are five times the TEDE/LDE/SDE limits. Annual PSE limits equal the TEDE/LDE/SDE limits.	Lifetime PSE limits are five times the TEDE/LDE/SDE limits. Annual PSE limits equal the TEDE/LDE/SDE limits.	Lifetime PSE limits are five times the TEDE/LDE/SDE limits. Annual PSE limits equal the TEDE/LDE/SDE limits.
Emergency Exposure	See EPA-400-92-001	See site emergency plan	See site emergency plan

Catawba Nuclear Station
2007 NRC Exam
Reactor Operator

Question 72

Bank Question: 07-72 ***Answer: D***

---

1 Pt(s). Unit 1 is in Mode 6 with fuel movement in progress. The Containment Purge system was in service when a valid EMF alarm occurred shutting down the system. With the following plant conditions:

- SSPS is in test
- 1EMF-39 (Containment Gas) has been declared inoperable
- 1EMF-36 (Unit Vent Gas) is operable
- Incore Instrument Purge is shutdown
- A new GWR package is available following the above EMF actuation.
- "Fuel-Norm" switch is in the "Fuel" position.
- Fuel movement is in progress

What action is required (if any) for Containment Purge to be placed back in service and fuel movement to continue?

A. Containment Purge can be placed in service.

B. SSPS must be removed from test.

C. Incore Instrument Purge must be started.

D. 1EMF-39 must be restored operable.

Distracter Analysis:

A. **Incorrect**:
Plausible: EMF 39 must be operable to place VP in service.

B. **Incorrect:**
Plausible: This would cause VP to shutdown on an St signal instead of just an EMF 39 alarm but this is not required for VP startup.

C. **Incorrect:**
Plausible: For refueling Incore VP cannot be running.

D. **Correct:**

Level: RO

K/A: 2.3 Radiation Control 2.3.9 Knowledge of the process for performing a containment purge. (CFR: 43.4 / 45.10) IMPORTANCE RO 2.5 SRO 3.4

Catawba Nuclear Station
2007 NRC Exam
Reactor Operator

Question 72

Lesson Plan Objective: VP06 Describe the startup, monitoring, and shutdown of the VP System per the OP.

Source: NEW

Level of knowledge: comprehension

References:
1. VP OP
2.

Containment Purge System

1. Purpose

The purpose of this procedure is to outline the operation of the Containment Purge System (VP).

2. Limits and Precautions

2.1 After refueling, ensure the "FUEL-NORM" switch is returned to "NORM" prior to putting the reactor vessel missile shield into place. This prevents pressurizing upper containment.

2.2 A new Gaseous Waste Release (GWR) sample is required prior to each release.

NOTE:	If actuation is due to an EMF spike, the release may be re-attempted twice before a new sample is required.

2.3 If a VP release is automatically stopped due to a controlling EMF actuation, a new Gaseous Waste Release (GWR) sample is required.

2.4 Do **NOT** reset containment ventilation isolation until spurious containment radiation level signals or any associated EMF alarms are properly cleared.

2.5 Any sudden increase or decrease in pressure across any filter bank shall be investigated immediately.

2.6 For two train operation, the VP Pre-filters shall be replaced when the combined Pre-filter and upstream HEPA differential pressure reaches 2" H_2O.

2.7 For single train operation, the VP Pre-filters shall be replaced when the combined Pre-filter and upstream HEPA differential pressure reaches 3" H_2O.

2.8 If 1EMF-37 has reached the Trip 1 setpoint, RP shall be notified to change the cartridge before a release is attempted.

2.9 Do **NOT** initiate purge of containment with 1EMF-39 inoperable. Once initiated, VP can continue with 1EMF-39L inoperable under the limitations presented in Enclosure 4.9 (Actions for EMF-39 Inoperability With VP in Service).

2.10 Do **NOT** operate the Incore Instrument Room Purge System during movement of recently irradiated fuel inside containment. The Incore Instrument Filter Units are **NOT** tested and **CANNOT** be considered operable for Technical Specification 3.9.3. {PIP 94-1532}

Catawba Nuclear Station
2007 NRC Exam
Reactor Operator

Question 73

Bank Question: 07-73 ***Answer: D***

---

1 Pt(s). Unit 1 is conducting a refueling outage. The NC system is cooled down to ~230°F using steam dumps before ND is placed in service.

Which one of the following statements correctly states the reason for cooling down to a value lower than the ND design temperature of 300°F?

A. Cooldown can be accomplished faster by using steam dumps; thus, shortening the outage.

B. ND is placed in service at the lower temperature to prevent challenging the NC PORV LTOP setpoint on ND pump start.

C. The steam generators can be cooled down to a lower value.

D. ND is placed in service at the lower temperature to decrease auxiliary building dose rates while ND is in service.

Distracter Analysis:

One ND train will be aligned in Mode 4. The NC System will be cooled down using only the steam dumps to approximately 230° F. Placing the first train of ND in service at this lower temperature (230° F versus the design temperature of 300° F.) will result in significant dose reduction in the Auxiliary Building for the duration of the outage. The second ND train will be placed in service in mode 5 when no longer required to be in standby readiness as part of the ECCS Subsystem

A. **Incorrect**:
Plausible: The P-12 interlock is bypassed to allow more steam dumps to be opened to increase steam flow, but the cooldown rate is lower than can be accomplished with ND.

B. **Incorrect:**
Plausible: A lower temperature would allow a lower NC pressure but an ND Pump start does not present an overpressure concern.

C. **Incorrect:**
Plausible: SG cooldown rate is higher, but this doesn't impact the value to which the SGs can be cooled to..

D. **Correct:**

Level: RO

K/A: 2.3 Radiation Control 2.3.10 Ability to perform procedures to reduce excessive levels of radiation and guard against personnel exposure. (CFR: 43.4 / 45.10)

Catawba Nuclear Station
2007 NRC Exam
Reactor Operator

Question 73
IMPORTANCE RO 2.9 SRO 3.3

Lesson Plan Objective: RADHP19 Summarize an understanding of the specific responsibilities of station personnel in regards to Radiological Work Practices per NSD-507.

Source: NEW

Level of knowledge: MEMORY

References:
1. OP-CN-PS-ND pages 14
2.

2.3 ND System Operation

A. Startup of ND System During Plant Cooldown (OP/1/A/6200/004 Encl. 4.1). (Obj. #9) Refer to the Limits and Precautions per OP/1/A/6200/04. (Obj #8)

1. Ensure initial conditions met.
2. One ND train will be aligned in Mode 4. The NC System will be cooled down using only the steam dumps to approximately 230° F. Placing the first train of ND in service at this lower temperature (230° F versus the design temperature of 300° F.) will result in significant dose reduction in the Auxiliary Building for the duration of the outage. The second ND train will be placed in service in mode 5 when no longer required to be in standby readiness as part of the ECCS Subsystem.
3. ND System is pressurized using NV letdown.
4. After the differential pressure between the NC System and ND System has been equalized, the ND suction valve to the NC System is opened.
5. The ND pump is started in recirc and adequate boron concentration is verified.
6. If boron adjustment is required, the ND system will be aligned to letdown to the NV System.
7. Align ND discharge to the cold legs.
8. Slowly throttle open the ND Hx Bypass Ctrl. to establish a flow rate of 3300-3500 gpm.
9. Adjust the ND Hx Outlet to establish a cooldown rate of less than 80° F in any one-hour period (administrative target).

B. Placing ND trains in parallel (Obj. #9)

1. Ensure pressure is equalized across the loop suction isolation valve and align to the NC System.
2. Ensure sufficient KC pumps are in service to allow an increase of 5000 gpm.
3. Start the idle ND pump in recirc; verify boron concentration and adjust if required.
4. Align the ND train to NV letdown.
5. Align ND train discharge to the cold legs and open crossover valve.
6. Establish required flowrate 3300 to 3500 gpm.

C. Establish pressurizer spray from ND system (OP/1/A/6200/004 Encl. 4.2) (Obj. #9)

1. Establish initial conditions
   a) Review limits and precautions

Catawba Nuclear Station
2007 NRC Exam
Reactor Operator

Question 74

Bank Question: 07-74 ***Answer: C***

---

1 Pt(s). In accordance with AP/1/A/5500/015 (Rod Control Malfunctions), a continuous rod withdrawal event at 99% power with rod control in automatic will require the operators to trip the reactor when?

A. Reactor power rises to 102%.

B. Emergency boration efforts do not restore Tavg to Tref.

C. Rod motion continues even after placing rod control in manual.

D. Turbine load reduction does not result in inward rod motion.

Distracter Analysis:

A. **Incorrect:**
Plausible: This would necessitate action to decrease power but not necessarily a Rx trip.

B. **Incorrect:**
Plausible: Boration is performed to restore rods to above the insertion limits which is the opposite of what this event is.

C. **Correct:**

D. **Incorrect**:
Plausible: Turbine load is used to maintain Rx Power less than 100%. This should cause rod insertion with rods in auto. But, a lack of auto rod motion on Turbine load reduction does not require a RX Trip.

Level: RO

K/A: 2.4 Emergency Procedures /Plan (Continued) 2.4.11 Knowledge of abnormal condition procedures. (CFR: 41.10 / 43.5 / 45.13) IMPORTANCE RO 3.4 SRO 3.6

Lesson Plan Objective: IRE18 State from memory, the immediate actions required per AP/1/A/5500/015 Rod Control Malfunction

Source: BANK (Cook 2001)

Level of knowledge: Memory

References:
1. AP/15
2.

ACTION/EXPECTED RESPONSE	RESPONSE NOT OBTAINED

C. Operator Actions

__ 1. **Ensure "CRD BANK SELECT" switch - IN MANUAL.**	
__ 2. **Verify all rod motion - STOPS.**	**Perform the following:** __ a. Trip reactor. __ b. **GO TO** EP/1/A/5000/E-0 (Reactor Trip Or Safety Injection).

NOTE For T-Ref failures, T-Ref will need to be determined for current power level.

__ 3. **Manually adjust control rods as necessary to maintain T-Avg within 1°F of T-Ref.**	**Adjust the following as necessary to maintain T-Avg within 1°F of T-Ref:** __ • Turbine load __ • NC System boron concentration.

Catawba Nuclear Station
2007 NRC Exam
Reactor Operator

Question 75

Bank Question: 07-75 ***Answer: D***

---

1 Pt(s). A reactor is operating at 100% power when a loss of offsite power occurs resulting in a reactor trip and a loss of forced reactor coolant circulation. NC T hot temperature is greater than cold leg temperature and steam generator (S/G) levels are stable.

Which one of the following combinations of parameter trends, occurring 30 minutes after the trip, indicates that natural circulation is occurring?

	T hot	T cold	S/G pressure	NC Subcooling
A.	Increasing	Decreasing	Increasing	Stable
B.	Stable	Decreasing	Increasing	Decreasing
C.	Increasing	Stable	Decreasing	Increasing
D.	Decreasing	Stable	Stable	Increasing

Distracter Analysis:

A. **Incorrect**:
Plausible: T cold going down and a stable subcooling would indicate that cooling was occurring.

B. **Incorrect:**
Plausible: T cold going down and a stable subcooling would indicate that cooling was occurring.

C. **Incorrect:**
Plausible: T cold stable and S/G pressure going down would indicate that cooling was occurring.

D. **Correct:**

Level: RO

K/A: 2.4 Emergency Procedures /Plan (Continued) 2.4.47 Ability to diagnose and recognize trends in an accurate and timely manner utilizing the appropriate control room reference material. (CFR: 41.10, 43.5 / 45.12) IMPORTANCE RO 3.4 SRO 3.7

Lesson Plan Objective: EP115 Explain the Bases, including any identified knowledges/abilities, for all of the steps, notes, and cautions in EP/1/A/5000/ES-0.1 (Reactor Trip Response).

Source: BANK (Point Beach 2002)

Catawba Nuclear Station
2007 NRC Exam
Reactor Operator

Question 75

Level of knowledge: comprehension

References:
1. ES-0.1 Enclosure 3
2.

NOTE : Allow NC temperature to stabilize after transfer of steam dumps to pressure mode.

1. The following conditions support or indicate natural circulation flow:

   - o NC subcooling - GREATER THAN 0°F
   - o S/G pressures - STABLE OR DECREASING
   - o NC T-Hots - STABLE OR DECREASING
   - o Core exit T/Cs - STABLE OR DECREASING
   - o NC T-Colds - AT SATURATION TEMPERATURE FOR S/G PRESSURE (WITHIN THE LIMITS OF THE GRAPH BELOW).

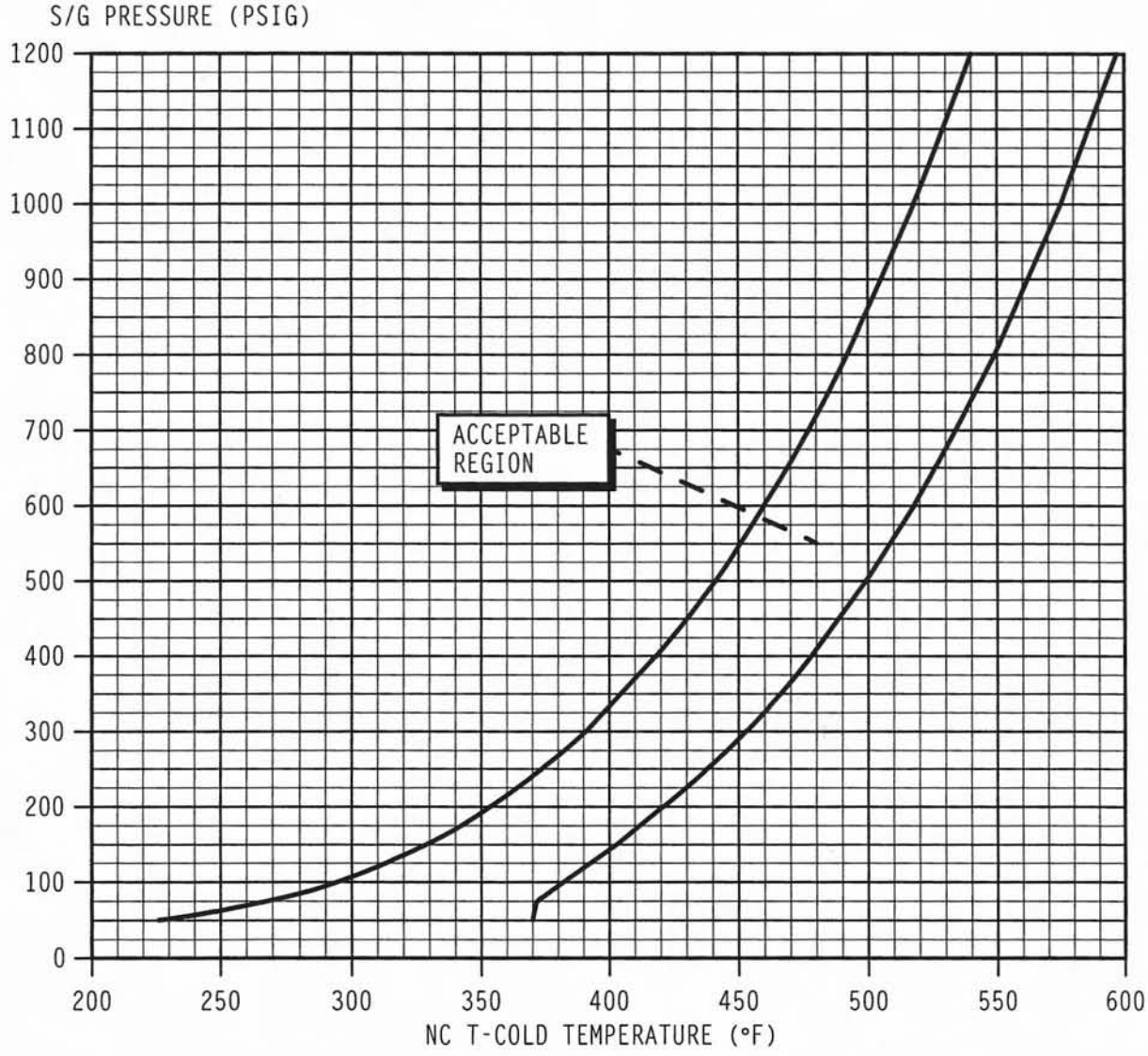

2. IF Natural Circulation flow is not established, THEN increase dumping steam to establish Natural Circulation flow.