March 27, 2008

LICENSEE: Entergy Nuclear Operations, Inc.

FACILITY: Indian Point Nuclear Generating Unit Nos. 2 and 3

SUBJECT: SUMMARY OF FEBRUARY 28, 2008, MEETING WITH ENTERGY ON THE RESPONSE TO GENERIC LETTER 2004-02 FOR INDIAN POINT NUCLEAR GENERATING UNIT NOS. 2 AND 3 (TAC NOS. MC4689 AND MC4690)

On February 28, 2008, a Category 1 public meeting was held between the Nuclear Regulatory Commission (NRC) and representatives of Entergy Nuclear Operations, Inc. (licensee), at the Hyatt Regency, 7400 Wisconsin Avenue, Bethesda, Maryland. The purpose of the meeting was to discuss the licensee's response to NRC Generic Letter (GL) 2004-02, "Potential Impact of Debris Blockage On Emergency Recirculation During Design-Basis Accidents At Pressurized-Water Reactors" and potential revisions to the plant licensing basis for Indian Point Nuclear Generating Unit Nos. 2 and 3 (IP2 and IP3). A list of attendees is provided as Enclosure 1, but may not be all-inclusive.

The licensee presented information on how they are responding to the NRC concerns expressed in NRC GL 2004-02. See Enclosure 2 for the handout used by the licensee. The licensee described the existing containment sump configuration for both units, and the modifications completed and those under consideration to address GL 2004-02. They noted that the improved sump strainers have already been installed in IP2 and IP3, although some additional modifications will be installed in IP2 during the spring 2008 refueling outage and in IP3 during the summer of 2008. The licensee discussed their plan to submit license amendments for IP2 and IP3 to revise the current licensing basis for passive failures during the recirculation phase of the loss-of-coolant accident. The licensee also noted that further extensions to the GL 2004-02 target dates may be needed to resolve certain analysis issues.

A member of the public was in attendance, but no Public Meeting Feedback forms were submitted. Please direct any inquiries to me at 301-415-2901, or by email to jpb1@nrc.gov.

/RA/

John P. Boska, Senior Project Manager
Plant Licensing Branch I-1
Division of Operating Reactor Licensing
Office of Nuclear Reactor Regulation

Docket Nos. 50-247 and 50-286

Enclosures:
1. List of Attendees
2. Licensee Handout

cc w/encls: See next page

Indian Point Nuclear Generating Unit Nos. 2 & 3

cc:

Vice President, Operations
Entergy Nuclear Operations, Inc.
Indian Point Energy Center
450 Broadway, GSB
P.O. Box 249
Buchanan, NY 10511-0249

Senior Vice President
Entergy Nuclear Operations, Inc.
P.O. Box 31995
Jackson, MS 39286-1995

Vice President Oversight
Entergy Nuclear Operations, Inc.
P.O. Box 31995
Jackson, MS 39286-1995

Senior Manager, Nuclear Safety & Licensing
Entergy Nuclear Operations, Inc.
P.O. Box 31995
Jackson, MS 39286-1995

Senior Vice President and COO
Entergy Nuclear Operations, Inc.
440 Hamilton Avenue
White Plains, NY 10601

Assistant General Counsel
Entergy Nuclear Operations, Inc.
440 Hamilton Avenue
White Plains, NY 10601

Manager, Licensing
Entergy Nuclear Operations, Inc.
Indian Point Energy Center
450 Broadway, GSB
P.O. Box 249
Buchanan, NY 10511-0249

Mr. Paul Tonko
President and CEO
New York State Energy, Research, and
Development Authority
17 Columbia Circle
Albany, NY 12203-6399

Mr. John P. Spath
New York State Energy, Research, and
Development Authority
17 Columbia Circle
Albany, NY 12203-6399

Mr. Paul Eddy
New York State Department
of Public Service
3 Empire State Plaza
Albany, NY 12223-1350

Regional Administrator, Region I
U.S. Nuclear Regulatory Commission
475 Allendale Road
King of Prussia, PA 19406

Senior Resident Inspector's Office
Indian Point 2
U. S. Nuclear Regulatory Commission
P.O. Box 59
Buchanan, NY 10511

Senior Resident Inspector's Office
Indian Point 3
U. S. Nuclear Regulatory Commission
P.O. Box 59
Buchanan, NY 10511

Mr. Charles Donaldson, Esquire
Assistant Attorney General
New York Department of Law
120 Broadway
New York, NY 10271

Mr. Raymond L. Albanese
Four County Coordinator
200 Bradhurst Avenue
Unit 4 Westchester County
Hawthorne, NY 10532

Mayor, Village of Buchanan
236 Tate Avenue
Buchanan, NY 10511

Indian Point Nuclear Generating Unit Nos. 2 & 3

cc:

Mr. Jim Riccio
Greenpeace
702 H Street, NW
Suite 300
Washington, DC 20001

Mr. Phillip Musegaas
Riverkeeper, Inc.
828 South Broadway
Tarrytown, NY 10591

Mr. Mark Jacobs
IPSEC
46 Highland Drive
Garrison, NY 10524

Mr. Sherwood Martinelli
FUSE USA
via email

March 27, 2008

LICENSEE: Entergy Nuclear Operations, Inc.

FACILITY: Indian Point Nuclear Generating Unit Nos. 2 and 3

SUBJECT: SUMMARY OF FEBRUARY 28, 2008, MEETING WITH ENTERGY ON THE RESPONSE TO GENERIC LETTER 2004-02 FOR INDIAN POINT NUCLEAR GENERATING UNIT NOS. 2 AND 3 (TAC NOS. MC4689 AND MC4690)

On February 28, 2008, a Category 1 public meeting was held between the Nuclear Regulatory Commission (NRC) and representatives of Entergy Nuclear Operations, Inc. (licensee), at the Hyatt Regency, 7400 Wisconsin Avenue, Bethesda, Maryland. The purpose of the meeting was to discuss the licensee's response to NRC Generic Letter (GL) 2004-02, "Potential Impact of Debris Blockage On Emergency Recirculation During Design-Basis Accidents At Pressurized-Water Reactors" and potential revisions to the plant licensing basis for Indian Point Nuclear Generating Unit Nos. 2 and 3 (IP2 and IP3). A list of attendees is provided as Enclosure 1, but may not be all-inclusive.

The licensee presented information on how they are responding to the NRC concerns expressed in NRC GL 2004-02. See Enclosure 2 for the handout used by the licensee. The licensee described the existing containment sump configuration for both units, and the modifications completed and those under consideration to address GL 2004-02. They noted that the improved sump strainers have already been installed in IP2 and IP3, although some additional modifications will be installed in IP2 during the spring 2008 refueling outage and in IP3 during the summer of 2008. The licensee discussed their plan to submit license amendments for IP2 and IP3 to revise the current licensing basis for passive failures during the recirculation phase of the loss-of-coolant accident. The licensee also noted that further extensions to the GL 2004-02 target dates may be needed to resolve certain analysis issues.

A member of the public was in attendance, but no Public Meeting Feedback forms were submitted. Please direct any inquiries to me at 301-415-2901, or by email to jpb1@nrc.gov.

/RA/

John P. Boska, Senior Project Manager
Plant Licensing Branch I-1
Division of Operating Reactor Licensing
Office of Nuclear Reactor Regulation

Docket Nos. 50-247 and 50-286

Enclosures:
1. List of Attendees
2. Licensee Handout

cc w/encls: See next page

Memo: ML080880178

OFFICE	LPL1-1/PM	LPL1-1/LA	LPL1-1/BC
NAME	JBoska	SLittle	MKowal
DATE	3/27/08	3/27/08	3/27/08

DATED: March 27, 2008

SUMMARY OF FEBRUARY 28, 2008, MEETING WITH ENTERGY ON THE RESPONSE TO GENERIC LETTER 2004-02 FOR INDIAN POINT NUCLEAR GENERATING UNIT NOS. 2 AND 3 (TAC NOS. MC4689 AND MC4690)

PUBLIC
LPL1-1 R/F
RidsNrrDorlLpl1-1
RidsNrrDirsItsb
RidsNrrPMJBoska
RidsNrrLASLittle
ECobey, RI
RidsOGCRp
RidsAcrsAcnw&mMailCenter
RidsNrrOd
RidsRgn1MailCenter
MScott
LWhitney
RArchitzel
DJackson
RTorres
GWest, EDO Region I
JLehning

cc: Plant Mailing list

UNITED STATES
NUCLEAR REGULATORY COMMISSION

MEETING ATTENDANCE FORM

Subject: NRC Meeting with Entergy Nuclear Operations, Inc., on the Implementation of NRC Generic letter 2004-02 at Indian Point Nuclear Generating Unit Nos. 2 and 3

Date: February 28, 2008 Location: Hyatt Hotel, Bethesda, MD

PLEASE PRINT ALL INFORMATION LEGIBLY

NAME	ORGANIZATION
Ralph Architzel	NRC/SSIB
Leon Whitney	NRC/SSIB
John Lehning	NRC/SSIB
Dianne Jackson	NRC/DSS
Michael Scott	NRC/DSS/SSIB
Roberto L. Torres	NRC/DSS/SSIB
Mark Kowal	NRC/NRR/DORL
ADRIAN MUÑIZ	NRC/NRR/DORL

Enclosure 1

UNITED STATES
NUCLEAR REGULATORY COMMISSION

MEETING ATTENDANCE FORM

Subject: NRC Meeting with Entergy Nuclear Operations, Inc., on the Implementation of NRC Generic letter 2004-02 at Indian Point Nuclear Generating Unit Nos. 2 and 3

Date: February 28, 2008 Location: Hyatt Hotel, Bethesda, MD

PLEASE PRINT ALL INFORMATION LEGIBLY

NAME	ORGANIZATION
John Boska	NRC / NRR / DORL
Tom McCaffrey	Entergy / Indian Point / Design Engr
Valerie Cambiasiano	Entergy / Indian Point / Design Eng.
ROGER WATERS	ENTERGY / Indian Point / Licensing
LOUIS LIBERATORI	ENTERGY / INDIAN POINT / DESIGN ENG.
Patric W. Conroy	Entergy / Indian Point / NSA Director
Adi IRANI	ENTERGY / NUCLEAR ANALYSIS
Bob WALPOLE	ENTER / IPEC / LICENSING
Marvin Ward Jr.	Public

Indian Point Energy Center
Generic Letter 2004-02

February 28, 2008

Entergy

Enclosure 2

Indian Point Energy Center – GL-2004-02

- **Introduction of Personnel**
  - Pat Conroy – Director, Nuclear Safety Assurance
  - Bob Walpole – Manager, Licensing
  - Roger Waters – Licensing Engineer
  - Tom McCaffrey – Manager, Design Engineering
  - Valerie Cambigianis – Supervisor, Design Engineering
  - Lou Liberatori - Senior Lead Engineer
  - Adi Irani – Supervisor, Nuclear Analysis

Indian Point Energy Center – GL-2004-02

- **Purpose of Meeting**
  - Provide NRC an overview of planned changes to the licensing basis regarding passive failure assumptions as related to GL-2004-02.

Indian Point Energy Center – GL-2004-02

- **Current Status of Physical Activities – Unit 2**
  - Summary of physical changes completed
    - IR sump increased from 48 sq ft to 3200 sq ft
    - VC sump increased from 14 sq ft to 440 sq ft
    - Flow barriers over the incore tunnel
    - Gates at personal entrances through crane wall
  - Summary of physical changes to be completed in Spring 2008 refueling outage
    - Screens on crane wall penetrations
    - VC Sump increased from 440 sq ft to 1200 sq ft
    - Buffer change out
  - At the completion of the Spring 2008 refueling outage, all physical changes to the plant for GSI-191 resolution will be in place.

Indian Point Energy Center – GL-2004-02

- **Current Status of Physical Activities – Unit 3**
  - Summary of physical changes completed
    - IR sump increased from 48 sq ft to 3200 sq ft
    - VC sump increased from 36 sq ft to 1000 sq ft
    - Flow barriers over the incore tunnel
    - Gates at personal entrances through the crane wall
    - Screens on crane wall penetrations
    - New internal recirculation pumps
  - Summary of physical changes remaining to be completed
    - Buffer change out
  - By June 30, 2008, all physical changes to the plant for GSI-191 resolution will be in place.

Indian Point Energy Center – GL-2004-02

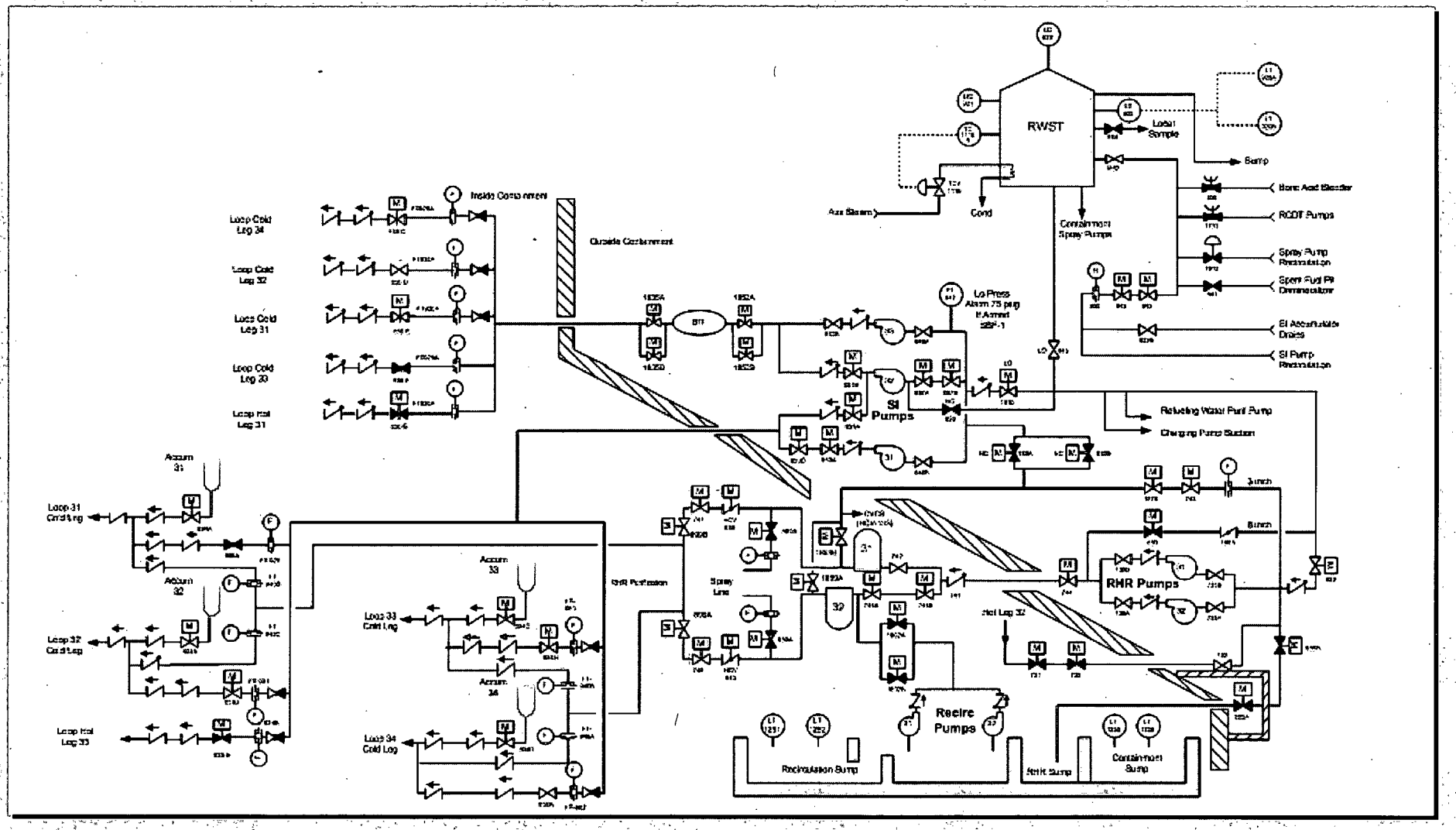

Indian Point Energy Center – GL-2004-02

- **IPEC Containment Sump Design**
  - Primary: Internal Recirculation (IR) sump feeding two internal (low head) recirculation pumps.
  - Backup: Internal Vapor Containment (VC) sump feeding two external (low head) RHR pumps.
  - Both capable of providing post-LOCA recirculation with original deterministic design assumption of 50% sump screen blockage.
  - External VC sump system credited for alternative recirculation flow path in the event of an assumed single passive failure in ECCS or support cooling systems.

Indian Point Energy Center – GL-2004-02

- **Impact of GL-2004-02**
  - New mechanistic treatment of post-LOCA plant specific debris, transport and loading.
  - Postulated large break LOCA combined with an assumed single passive failure upon completion of the switchover from injection to recirculation could challenge the smaller backup VC sump capability.
  - For smaller postulated break scenarios, debris amounts and/or transport are not expected to challenge the VC sump capability.

Indian Point Energy Center – GL-2004-02

- **Possible Approaches to Address VC Sump Loading**
  - Revise the current licensing basis for single passive failure assumptions (i.e., timing of passive failure, nature of passive failure).
  - Employ the alternative break methodology option permitted under GL-2004-02.

Indian Point Energy Center – GL-2004-02

- **Preferred Option**
  - Revise the assumed timing of a postulated single passive failure until at least 24 hours after event initiation.
    - No change proposed for the types of single passive failures considered in current licensing basis
    - Only a change in timeframe for postulating a single passive failure is being proposed (i.e., 24 hours) consistent with the NRC guidance (SECY-77-439) for the following piping systems:
      - Unit 2 and Unit 3 Emergency Core Cooling system
      - Unit 2 Component Cooling Water System
    - Used in lieu of applying alternative break methodology.
    - Does not require a regulatory exemption

Indian Point Energy Center – GL-2004-02

- **Status of Licensing Activities**
  - Buffering change out – License amendment request
    - Unit 2 - Approved by NRC - February 7, 2008
    - Unit 3 - Target date to NRC - March 7, 2008
  - Supplemental Response to Generic Letter 2004-02 - To be submitted by February 29, 2008
  - License Basis Change Request (LAR) for Single Passive Failure Assumptions – Target date to NRC - March 7, 2008.

Indian Point Energy Center – GL-2004-02

- Challenges to project completion
  - License amendment request and physical changes for buffer change out – Unit 3
  - License basis change request for passive failure/sump redundancy review
  - Completion of ongoing analytical studies
  - Updating of report and submission of final letter

Indian Point Energy Center – GL-2004-02

- **Discussion**