U.S.NRC
United States Nuclear Regulatory Commission
Protecting People and the Environment

Advanced Finite Element Analyses of Pressurizer Nozzle Weld Flaws

R.L. Tregoning
Office of Nuclear Regulatory Research
U.S. Nuclear Regulatory Commission

CSNI IAGE Metals Subgroup Meeting
April 1 – 3, 2008
Paris, France

PWSCC in Alloy 82/182 Dissimilar Metal Butt Welds

- Primary Water Stress Corrosion Cracking (PWSCC) of Alloy 82/182 dissimilar metal butt welds is well documented
- PWSCC is dependent on temperature, tensile stress, time, and material
- Operational experience:
  - First butt weld PWSCC seen in 1993; other cases since 2000
  - Many instances of axial cracking
  - Fewer examples of circumferential cracks
  - Most at pressurizer and hot leg Alloy 82/182 nozzle-to-safe-end dissimilar metal welds

PWSCC in Alloy 82/182 Dissimilar Metal Butt Welds

- Operational experience at Wolf Creek
  - 5 circumferential indications found:
    - 1 in relief nozzle-to-safe end weld (7.7” ~26% through wall [TW])
    - 3 in pressurizer surge line nozzle-to-safe end weld (4” ~31% TW, 2.2” ~25% TW, & 0.8” @ ID surface)
    - 1 in safety nozzle-to-safe end weld (2.5” ~23% TW)

- NRC concerns
  - **First case of multiple, long, circumferential flaws**
  - While axial flaws lead to leaks, circumferential flaws may lead to pipe rupture

Westinghouse Pressurizer Dissimilar Metal Butt Welds

Surge Nozzle-to-Safe End Dissimilar Metal Weld

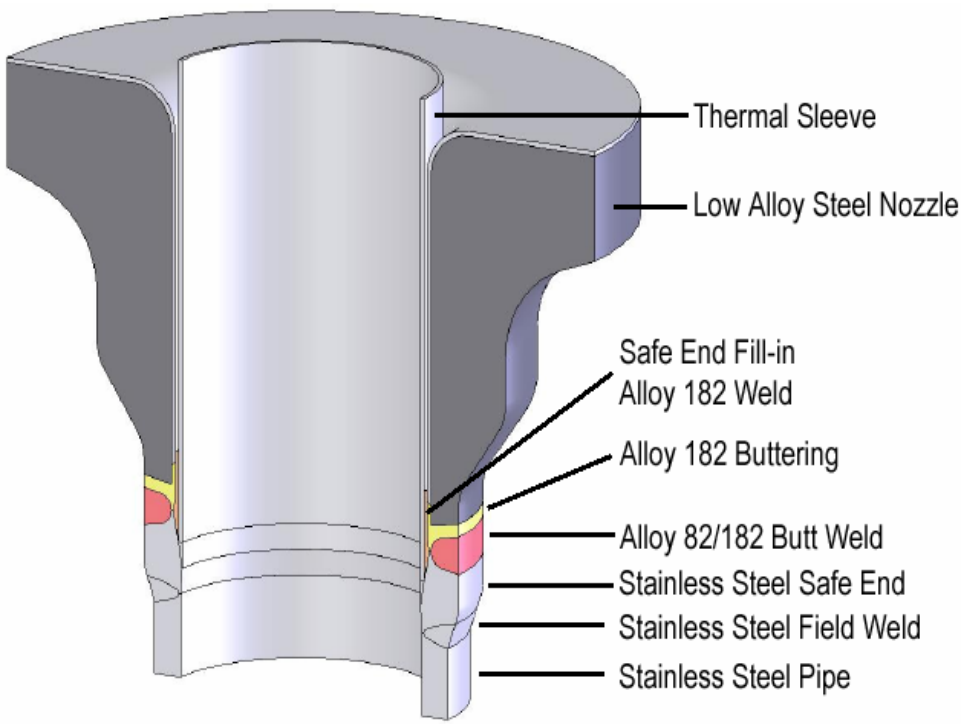

Safety/Relief Nozzle-to-Safe End Dissimilar Metal Weld

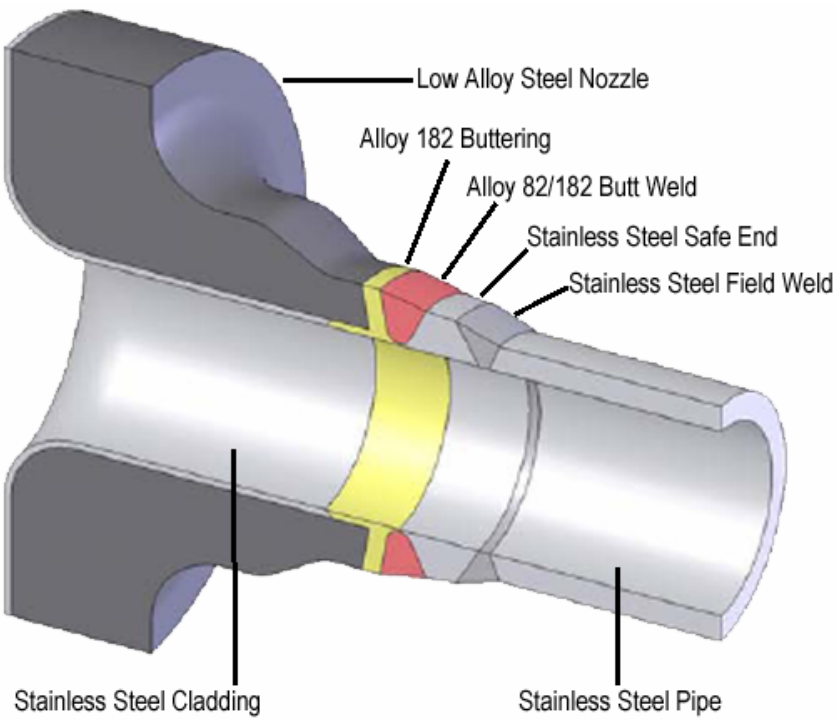

Wolf Creek Scoping Analysis: November 2006

- NRC conducted a scoping study
- Purpose
  - Evaluate the component integrity of the pressurizer nozzles using ASME Section XI flaw evaluation methodology
  - Calculate leakage rates from potential TW cracks
- Objectives of this study were to determine:
  - Time for the flaw to grow from current size to leakage
  - Time from leakage to rupture
  - Leakage rates from emerging TW flaws
- Outcomes
  - Should inspections/mitigations be accelerated?
  - Are current leak detection thresholds adequate?

Wolf Creek Scoping Analysis: Results

- Surge nozzle results
  - Leakage predicted to occur 1-2.2 years after discovery
  - All cases show at least 6 months b/w leakage and rupture
- Relief nozzle results
  - Leakage predicted to occur 1.9-2.6 years after discovery
  - 20/24 cases show leakage and rupture occur simultaneously
    - Surface cracks unstable before growing through-wall
- Safety nozzle results
  - Leakage predicted to occur 2.6-8.0 years after discovery
  - 8/24 cases show leakage and rupture occur simultaneously

Regulatory Summary

- NRC staff concluded that inspections/mitigations need to be accelerated for some plants
- NRC staff concluded that enhanced reactor coolant system leakage monitoring frequency, action levels & actions needed to be put in place
- NRC issued Confirmatory Action Letters to:
  - Ensure enhanced leakage monitoring in place
  - Complete inspection or mitigation by the end of 2007
  - However, if industry's proposed advanced finite element analyses provide reasonable assurance of safety, plants with outages planned in 2008 may avoid their 2007 outages

Advanced FEA Project: Background

- Purpose
  - Evaluate the component integrity of the pressurizer nozzle welds with new advanced FEA software for circumferential flaws that removes artificial conservatisms found in NRC Wolf Creek Scoping Analysis and ASME Section XI Code.
    - Artificially constrained the crack shape: semi-elliptical
    - Allow the crack to grow in a more realistic manner as a function of the stress intensity factor
- Objective
  - Evaluate viability of through-wall leakage prior to rupture for the pressurizer nozzle-to-safe end dissimilar metal welds for the 9 PWRs that had planned to perform inspection/mitigation during the spring 2008 outage season

Advanced FEA Project: NRC Confirmatory Program

- Industry developed a research program to perform the necessary analyses, i.e.:
  - Advanced FEA software
  - Sensitivity analyses
  - Weld residual stress (WRS) models
  - Benchmarking/verification and validation
- NRC confirmatory program developed to review, benchmark, verify, and evaluate the industry's results and the quality of their analyses
- Industry & NRC independently developed the advanced FEA software and weld residual stresses used in the analyses

Advanced FEA Project: NRC Confirmatory Program

- NRC reviewed the fabrication drawings for the 9 PWRs scheduled to perform inspections/mitigations in the spring 2008 outage season
- Agreement reached with industry on major technical issues
  - Analytical approach
  - Assumptions
  - Matrix of sensitivity cases in the industry's analyses
- Industry and NRC weld residual stress models validated using an EU round robin study on dissimilar metal butt weld residual stress modeling

Advanced FEA Project: NRC Confirmatory Program

- Advanced FEA project evaluated in two parts
- Phase I Wolf Creek relief nozzle reevaluation
  - Reevaluate scoping analysis results with new model
  - Good agreement between industry & NRC model results
  - Unlike the NRC Wolf Creek scoping study results, margins were predicted for the time between leak and rupture
- Phase II parametric sensitivity study
  - Evaluate margin between detectable leakage and rupture through a matrix of sensitivity cases with plant specific nozzle geometries, loads, & WRS
  - Industry evaluated ~110 sensitivity cases
  - NRC confirmed results using 30 sensitivity cases

U.S.NRC
United States Nuclear Regulatory Commission
Protecting People and the Environment

Safety Factors

- Safety factors (SFs) were used to cover uncertainties
  - Fracture mechanics methodology and analytical assumptions
  - WRS caused by FE modeling differences
  - Leakage calculations
- NRC staff's goal was to satisfy SFs of:
  - 1.5 on stability for a minimum of 1 week and 5 on leakage
  - that is, 1 week after leakage was 5 X higher than action level of CALs, stability margin of 1.5 is to be met
- Staff did not consider it necessary to satisfy these SFs for sensitivity cases with highly conservative assumptions
  - Not all sensitivity cases reflect realistic or expected conditions

Phase 1 Results

Scoping Study

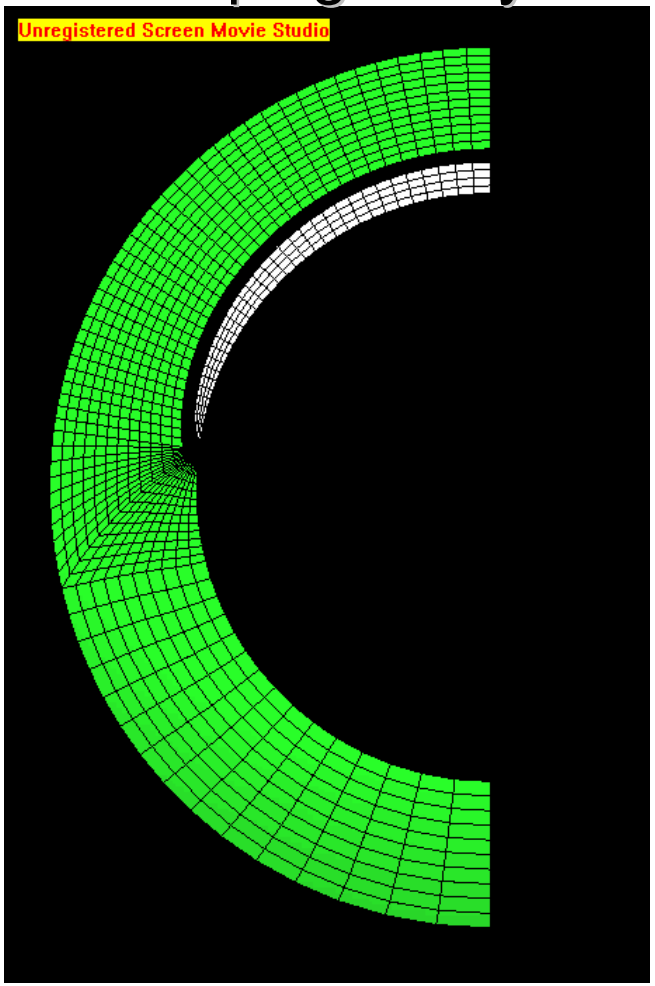

Advanced FEA

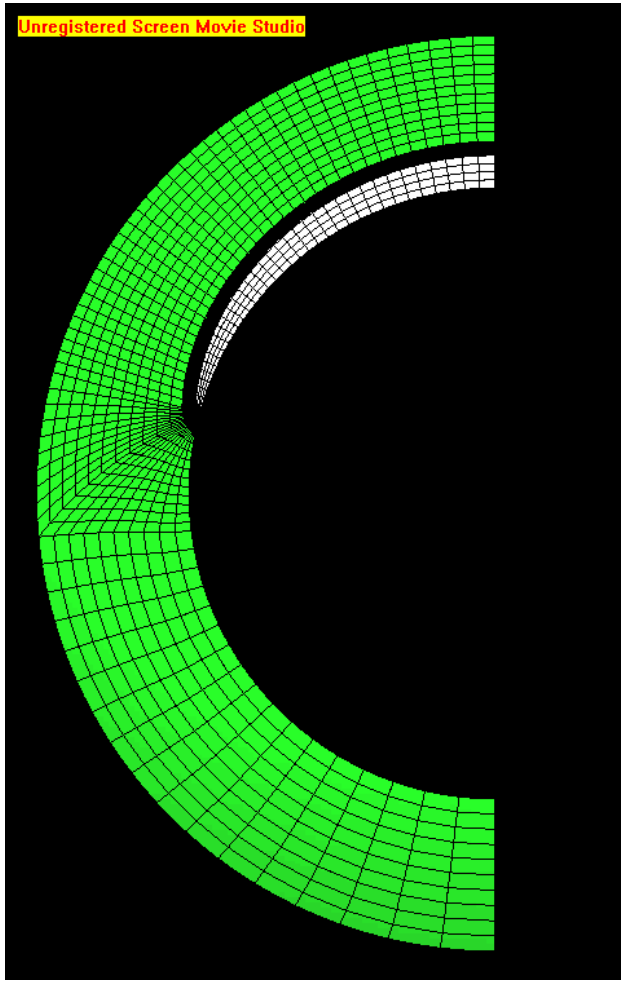

Surge Nozzle Welds

- WRSs calculated by finite element modeling
- DEI & Emc^2 both ran numerous surge nozzle sensitivity cases
  - Majority of cases show either arrest or adequate margin between leakage and rupture
  - All cases with Wolf Creek-like flaws resulted in arrest or adequate margins
- Limiting cases combined most unfavorable conditions
  - Highest plant loading
  - ID back-chipping and welding
  - WRS from model without safe end weld even though weld is present – addresses uncertainties in calculated WRSs
  - 360° 10% initial flaw
- Limiting cases with these assumptions resulted in stability safety factor at first leakage of slightly larger than 1

Advanced FEA Project: Phase II Surge Line Results

Case #	DEI Case #	Time at first leakage (yr)		Margin at 1gpm leak		Time since 1gpm leak to 1.2 margin (Month)	
		DEI	Emc2	DEI	Emc2	DEI	Emc2
17-1	S1b	1.2	1.30	1.03	1.00	0.00	0.00
17-2	17b	1.2	1.36	1.71	1.80	1.17	N/A
17-8	17a	Arrest	6.15	Arrest	1.58	Arrest	N/A
19-1	19b	Arrest	9.50	Arrest	1.58	Arrest	1.18
20	20b	Arrest	Arrest	Arrest	Arrest	Arrest	Arrest
17-11	25b	0.50	0.86	1.36	1.37	0.43	0.31

- Surge lines results confirm industry results for most cases
- Some divergence in a few cases, but margin remains for these cases
- Staff also ran a sensitivity case with more realistic thermal loading and flow stress
  - Results of this case were ~10% lower than safety factor goals
  - Staff considered results acceptable because of conservative initial flaw assumption

Advanced FEA Project: Phase II Results

- Generally good agreement between the NRC and industry advanced FEA benchmarked cases
- Of the 30 cases in the NRC confirmatory program:
  - All 11 safety/relief cases showed either arrest or substantial margin between leakage and rupture
  - 3 out of 4 spray cases showed crack arrest with the final case predicting more than 50 years to leakage with substantial margins between leakage and rupture
  - 9 out of 15 surge line cases show either arrest or adequate margin between leakage and rupture
  - 6 out of 15 surge line cases show little margin due to multiple conservatisms used in the analysis

Advanced FEA Project: WRS Validation

- NRC & industry conducted a weld residual stress (WRS) validation exercise since the Phase II results were most affected by the assumed WRS profiles
- NRC & industry WRS models were validated to the European Union Network for Evaluating Structural Components-III round robin study on the assessment of dissimilar weld integrity
- NRC & industry WRS models were validated to physical measurements of dissimilar metal butt welds
- WRS benchmarking showed generally good agreement between the NRC and industry models

Advanced FEA Project: WRS Validation

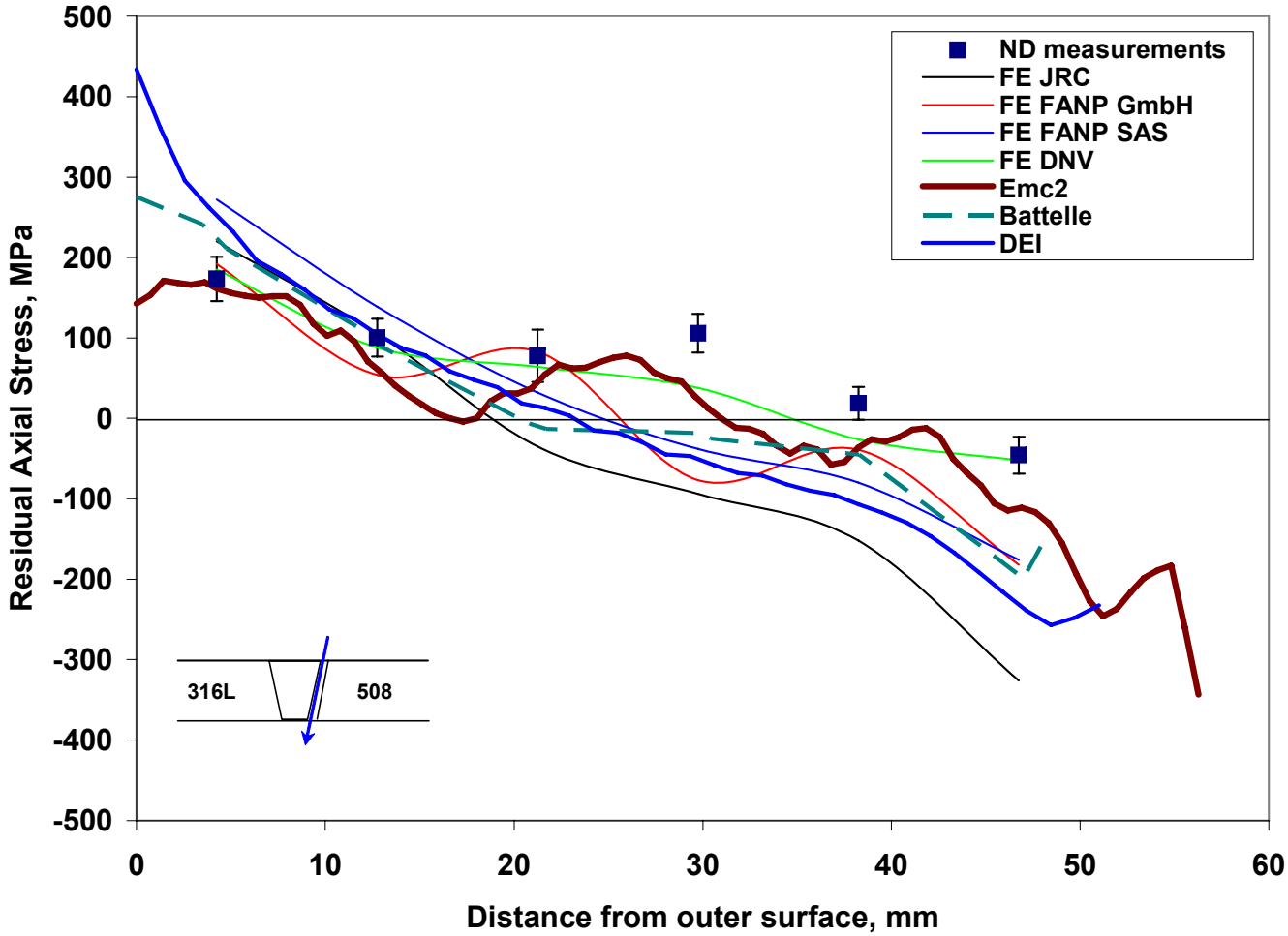

Advanced FEA Project: Summary

- Staff's evaluation of all sensitivity cases showed adequate margins between leak and rupture:
  - Majority of cases show either crack arrest or large margins
  - Balance of cases have adequate margins when conservatisms are considered
- Advanced FEA provided reasonable assurance that the 9 plants will continue to safely operate past the 12/31/07 industry imposed deadline to the next refueling outages in Spring 2008