3.0 LIMITING CONDITION FOR OPERATION (LCO) APPLICABILITY

The information in this section of the reference ABWR DCD, including all subsections, is incorporated by reference with the following departure.

STP DEP 16.3-1

LCO 3.0.6 *When a supported system LCO is not met solely due to a support system LCO not being met, the Conditions and Required Actions associated with this supported system are not required to be entered. Only the support system LCO ACTIONS are required to be entered. This is an exception to LCO 3.0.2 for the supported system. In this event, additional evaluations and limitations may be required in accordance with Specification ~~5.8~~5.6, "Safety Function Determination Program (SFDP)." If a loss of safety function is determined to exist by this program, the appropriate Conditions and Required Actions of the LCO in which the loss of safety function exists are required to be entered.*

3.0 SURVEILLANCE REQUIREMENT (SR) APPLICABILITY

The information in this section of the reference ABWR DCD, including all subsections, is incorporated by reference with no departures or supplements.

3.1 REACTIVITY CONTROL SYSTEMS

3.1.1 SHUTDOWN MARGIN (SDM)

The information in this section of the reference ABWR DCD, including all subsections, is incorporated by reference with no departures or supplements.

3.1 REACTIVITY CONTROL SYSTEMS

3.1.2 Reactivity Anomalies

The information in this section of the reference ABWR DCD, including all subsections, is incorporated by reference with no departures or supplements.

3.1 REACTIVITY CONTROL SYSTEMS

3.1.3 Control Rod OPERABILITY

The information in this section of the reference ABWR DCD, including all subsections, is incorporated by reference with no departures or supplements.

3.1 REACTIVITY CONTROL SYSTEMS

3.1.4 Control Rod Scram Times

The information in this section of the reference ABWR DCD, including all subsections, is incorporated by reference with no departures or supplements.

3.1 REACTIVITY CONTROL SYSTEMS

3.1.5 Control Rod Scram Accumulators

The information in this section of the reference ABWR DCD, including all subsections, is incorporated by reference with no departures or supplements.

3.1 REACTIVITY CONTROL SYSTEMS

3.1.6 Rod Pattern Control

The information in this section of the reference ABWR DCD, including all subsections, is incorporated by reference with no departures or supplements.

3.1 REACTIVITY CONTROL SYSTEMS

3.1.7 Standby Liquid Control (SLC) System

The information in this section of the reference ABWR DCD, including all subsections, is incorporated by reference with no departures or supplements.

3.2 POWER DISTRIBUTION LIMITS

3.2.1 AVERAGE PLANAR LINEAR HEAT GENERATION RATE (APLHGR)

The information in this section of the reference ABWR DCD, including all subsections, is incorporated by reference with no departures or supplements.

3.2 POWER DISTRIBUTION LIMITS

3.2.2 MINIMUM CRITICAL POWER RATIO (MCPR)

The information in this section of the reference ABWR DCD, including all subsections, is incorporated by reference with no departures or supplements.

3.2 POWER DISTRIBUTION LIMITS

3.2.3 LINEAR HEAT GENERATION RATE (LHGR) (Non-GE Fuel)

The information in this section of the reference ABWR DCD, including all subsections, is incorporated by reference with no departures or supplements.

3.3 INSTRUMENTATION

3.3.1.1 Safety System Logic and Control (SSLC) Sensor Instrumentation

The information in this section of the reference ABWR DCD, including all subsections, is incorporated by reference with the following departures.

STD DEP T1 2.2-1
STD DEP T1 2.3-1
STD DEP T1 2.4-2
STD DEP T1 2.4-3
STD DEP 4.4-1
STD DEP 16.3-79
STD DEP 16.3-84

STD DEP 4.4-1
The plant stability evaluation was provided in ABWR Licensing Topical Report NEDO-33336, Advanced Boiling Water Reactor (ABWR) Stability Evaluation, June 2007. Pages C-9 and C-10 are incorporated by reference.

SURVEILLANCE REQUIREMENTS

SURVEILLANCE		*FREQUENCY*
STD DEP T1 2.2-1 *SR 3.3.1.1.10*	*----------NOTES----------* *1. Neutron detectors are excluded.* *2. SENSOR CHANNEL CALIBRATION shall include calibration of all parameters used to calculate setpoints (e.g., recirculation flow for TPM setpoint) and all parameters used for trip function bypasses (e.g., ~~Turbine first stage pressure for TSV closure bypass~~* NMS simulated thermal power*).* *----------* *Perform SENSOR CHANNEL CALIBRATION.*	*18 months*

Table 3.3.1.1-1 (page 1 of 7)
SSLC Sensor Instrumentation

FUNCTION	APPLICABLE MODES OR OTHER SPECIFIED CONDITIONS	REQUIRED CHANNELS	CONDITIONS REFERENCED FROM REQUIRED ACTIONS	SURVEILLANCE REQUIREMENTS	ALLOWABLE VALUE
STD DEP 16.3-79 1. Startup Range Neutron Monitors					
1b. SRNM Neutron Flux - Short Period	2[(b)]	4	H	SR 3.3.1.1.1 SR 3.3.1.1.3 SR 3.3.1.1.8 SR 3.3.1.1.9 SR 3.3.1.1.10	≤ [ ] seconds
1d. SRNM – Inop	1,2	4	H	SR 3.3.1.1.3 SR 3.3.1.1.9	NA
STD DEP 16.3-79 2. Average Power Range Monitors					
2a. APRM Neutron Flux - High, Setdown	2	4	H	SR 3.3.1.1.1 SR 3.3.1.1.3 SR 3.3.1.1.7 SR 3.3.1.1.8 SR 3.3.1.1.9 SR 3.3.1.1.10	≤ [ ]% RTP
2d. APRM - Inop	1,2	4	H	SR 3.3.1.1.5 SR 3.3.1.1.7 SR 3.3.1.1.9	NA

Table 3.3.1.1-1 (page 2 of 7)
SSLC Sensor Instrumentation

FUNCTION	APPLICABLE MODES OR OTHER SPECIFIED CONDITIONS	REQUIRED CHANNELS	CONDITIONS REFERENCED FROM REQUIRED ACTIONS	SURVEILLANCE REQUIREMENTS	ALLOWABLE VALUE
STD DEP 16.3-79					
2f. Oscillation Power Range Monitor	Per Figure 3.3.1.1-1	4	J	~~SR 3.3.1.1.1~~ SR 3.3.1.1.5 SR 3.3.1.1.7 SR 3.3.1.1.9 SR 3.3.1.1.10 SR 3.3.1.1.12	See footnote (c)
STD DEP 16.3-84					
3. Reactor Vessel Steam Dome Pressure - High					
3c. SLCS and FWRB Initiation	1,2	4	~~G~~ H		

Table 3.3.1.1-1 (page 3 of 7)
SSLC Sensor Instrumentation

FUNCTION	APPLICABLE MODES OR OTHER SPECIFIED CONDITIONS	REQUIRED CHANNELS	CONDITIONS REFERENCED FROM REQUIRED ACTIONS	SURVEILLANCE REQUIREMENTS	ALLOWABLE VALUE
STD DEP 16.3-84					
7. Reactor Vessel Water Level - Low, Level 2					
7c. SLCS and FWRB Initiation	1,2	4	~~G~~ H	SR 3.3.1.1.1 SR 3.3.1.1.6 SR 3.3.1.1.11	≥ [ ] cm

Table 3.3.1.1-1 (page 4 of 7)
SSLC Sensor Instrumentation

FUNCTION	*APPLICABLE MODES OR OTHER SPECIFIED CONDITIONS*	*REQUIRED CHANNELS*	*CONDITIONS REFERENCED FROM REQUIRED ACTIONS*	*SURVEILLANCE REQUIREMENTS*	*ALLOWABLE VALUE*
STD DEP T1 2.4-2 *11. Drywell Pressure - High*					
11d. Feedwater Line Break Mitigation Initiation	1,2,3	4	P	SR 3.3.1.1.1 SR 3.3.1.1.5 SR 3.3.1.1.9 SR 3.3.1.1.10 SR 3.3.1.1.13	≤ [ ] MPaG
STD DEP 16.3-79 *12. CRD Water Header Charging Pressure - Low*	*1,2*	*4*	*H*	*SR 3.3.1.1.1* *SR 3.3.1.1.5* SR 3.3.1.1.9 SR 3.3.1.1.10	*≤ [ ] MPaG*
STD DEP T1 2.3-1 *15. ~~Main Steam Tunnel Radiation - High~~*					
STD DEP T1 2.4-2 Feedwater Line Differential Pressure - High	1,2,3	4	P	SR 3.3.1.1.1 SR 3.3.1.1.5 SR 3.3.1.1.9 SR 3.3.1.1.10 SR 3.3.1.1.13	≤ [ ] MPaD
STD DEP T1 2.3-1 ~~*15a. RPS Trip Initiation*~~	~~*1,2*~~	~~*4*~~	~~*H*~~	~~*SR 3.3.1.1.5*~~ ~~*SR 3.3.1.1.9*~~ ~~*SR 3.3.1.1.10*~~	~~*≤ [ ] gray*~~
~~*15b. Isolation Initiation*~~	~~*1,2,3*~~	~~*4*~~	~~*Q*~~	~~*SR 3.3.1.1.5*~~ ~~*SR 3.3.1.1.9*~~ ~~*SR 3.3.1.1.10*~~	~~*≤ [ ] gray*~~

Table 3.3.1.1-1 (page 5 of 7)
SSLC Sensor Instrumentation

FUNCTION	APPLICABLE MODES OR OTHER SPECIFIED CONDITIONS	REQUIRED CHANNELS	CONDITIONS REFERENCED FROM REQUIRED ACTIONS	SURVEILLANCE REQUIREMENTS	ALLOWABLE VALUE
STD DEP 16.3-79 24a. Reactor Building Area Exhaust Air Radiation - High	1,2,3	4	K	SR 3.3.1.1.1 SR 3.3.1.1.5 SR 3.3.1.1.9 SR 3.3.1.1.10 SR 3.3.1.1.14	≤ [ ] gray

Table 3.3.1.1-1 (page 6 of 7)
SSLC Sensor Instrumentation

FUNCTION	APPLICABLE MODES OR OTHER SPECIFIED CONDITIONS	REQUIRED CHANNELS	CONDITIONS REFERENCED FROM REQUIRED ACTIONS	SURVEILLANCE REQUIREMENTS	ALLOWABLE VALUE
24b. Fuel Handling Area Exhaust Air Radiation – High	1,2,3	4	K	SR 3.3.1.1.1 SR 3.3.1.1.5 SR 3.3.1.1.9 SR 3.3.1.1.10 SR 3.3.1.1.14	≤ [ ] gray
STD DEP T1 2.4-3 26. ~~RCIC Steam Supply Line Pressure – Low~~ Not Used	~~1,2,3~~	~~4~~	~~K~~	~~SR 3.3.1.1.1~~ ~~SR 3.3.1.1.5~~ ~~SR 3.3.1.1.9~~ ~~SR 3.3.1.1.10~~	~~≤ [ ] MPaG~~

3.3 INSTRUMENTATION

3.3.1.2 Reactor Protection System (RPS) and Main Steam Isolation Valve (MSIV) Actuation

The information in this section of the reference ABWR DCD, including all subsections, is incorporated by reference with the following departure.

STD DEP 16.3-81

Table 3.3.1.2-1 (page 1 of 1)
RPS and MSIV Actuation

FUNCTION	*APPLICABLE MODES OR OTHER SPECIFIED CONDITIONS*	*REQUIRED CHANNELS*	*SURVEILLANCE REQUIREMENTS*
1. RPS Actuation.			
a. LOGIC CHANNELs	*1,2,5(a)*(b)	*4*	*SR 3.3.1.2.2* *SR 3.3.1.2.4* *SR 3.3.1.2.6*
b. OUTPUT CHANNELs	*1,2,5(a)*	*4*	~~*SR 3.3.1.2.2*~~ *SR 3.3.1.2.4* *SR 3.3.1.2.5* *SR 3.3.1.2.6*
2. MSIVs and MSL Drain Valves Actuation.			
b. OUTPUT CHANNELs	*1,2,3*	*4*	~~*SR 3.3.1.2.2*~~ *SR 3.3.1.2.4* *SR 3.3.1.2.5* *SR 3.3.1.2.7*

(b) SRNM and APRM LOGIC CHANNELS are only required to be OPERABLE when the associated Functions in LCO 3.3.1.1 are required to be OPERABLE.

3.3 INSTRUMENTATION

3.3.1.3 Standby Liquid Control (SLC) and Feedwater Runback (FWRB) Actuation

The information in this section of the reference ABWR DCD, including all subsections, is incorporated by reference with the no departures or supplements.

3.3 INSTRUMENTATION

3.3.1.4 ESF Actuation Instrumentation

The information in this section of the reference ABWR DCD, including all subsections, is incorporated by reference with the following departures.
STD DEP T1 2.4-2
STD DEP T1 2.4-3
STD DEP T1 3.4-1
STD DEP 8.3-1
STD DEP 16.3-50
STD DEP 16.3-86
STD DEP 16.3-94

STD DEP 8.3-1
The plant medium voltage electrical system alternate design description was provided in ABWR Licensing Topical Report NEDO-33335, Advanced Boiling Water Reactor (ABWR) Plant Medium Voltage Electrical System Design, May 2007. LTR pages 3.3-36 and 37 are incorporated by reference.

ACTIONS

CONDITION	*REQUIRED ACTION*	*COMPLETION TIME*
STD DEP T1 3.4-1 *B. One or more Functions with one* or more *LOGIC CHANNELS inoperable.* *OR* *One or more Functions with one* or more OUTPUT CHANNELS ~~*manual initiation channel*~~ *inoperable.*	*B.1* ~~*Place associated channel in bypass.*~~ ~~*AND*~~ ~~*B.2.1*~~ *Restore channel*(s) *to OPERABLE status.* ~~*OR*~~ ~~*B.2.2 Verify redundant feature(s) are OPERABLE.*~~	*1 hour* ~~*30 days*~~ ~~*30 days*~~
STD DEP T1 3.4-1 *C. One or more Functions with one* or more *SENSOR CHANNELS inoperable.* ~~*OR*~~ ~~*One or more Functions with two LOGIC CHANNELS or two manual initiation channels inoperable.*~~	*C.1 Restore* ~~*at least one required*~~ *channel*(s) *to OPERABLE status.*	*1 hour*

ACTIONS

STD DEP T1 3.4-1 *D. One or more Functions with one or more OUTPUT CHANNELs inoperable.* *OR* *HPCF C diverse logic manual initiation channel inoperable.*	*D.1* *OR* *D.2*	*Restore ESF actuation capability for the affected devices.* ----------*NOTE*---------- *This Action applies only to Functions 10.b, 12.b, 13.b, and 14.b.* ---------- *Actuate associated device(s).*	*1 hour* *1 hour*
STD DEP T1 3.4-1 *E. One or more Functions with one or more inoperable SENSOR CHANNELS.*	*E.1* *OR* *E.2*	*Restore inoperable channel.* *Declare associated device(s) inoperable.*	*24 hours* *24 hours*
STD DEP T1 3.4-1 *F. One or more Functions with ~~two~~ one or more manual initiation channels inoperable.*	*F.1*	*Restore ~~at least one channel to OPERABLE status~~ manual initiation capability for the affected Functions.*	*7 days*
STD DEP T1 3.4-1 *H. One or more ADS OUPUT CHANNELS inoperable ~~on~~ in one ~~or more~~ ADS ~~valves~~ division.* *OR* *One or more ADS LOGIC CHANNELS inoperable in one ADS division.* *OR* *One or more ADS manual initiation channels inoperable in one ADS division.*	*H.1*	*Restore channel(s) to OPERABLE status.*	*3 days if only one high pressure ECCS subsystem is OPERABLE* *AND* *7 days if two or more high pressure ECCS subsystems are OPERABLE*

OR *One or more ATWS manual ADS inhibit channels inoperable in one ADS division.* *OR* *Five required ADS SENSOR CHANNELS inoperable in one ADS division.*		
STD DEP T1 3.4-1 *I. ~~One or more SENSOR CHANNELS inoperable~~.* *~~OR~~* *One or more ADS ~~valves with two~~ OUTPUT CHANNELS inoperable* in two ADS divisions. *OR* *One or more ADS LOGIC CHANNELS inoperable in two ADS divisions.* *OR* *One or more ADS manual initiation channels inoperable in two ADS divisions.* *OR* *One or more ATWS manual ADS inhibit channels inoperable in two ADS divisions.* *OR* *Required Action and associated Completion*	*I.1 Declare associated ESF features inoperable.*	*1 hour*

Time of Condition H not met.		
STD DEP T1 3.4-1 *M. ADS initiation capability not maintained in both ADS divisions.* *<u>OR</u>* *Required Actions and associated Completion Times of Condition ~~H,~~ J, K, or L not met.*	*M.1 Declare ADS valves inoperable.*	*Immediately*

SURVEILLANCE	*FREQUENCY*
STD DEP 16.3-86 *SR 3.3.1.4.7 Perform ~~Manual initiation~~ CHANNEL FUNCTIONAL TEST.*	*18 months*

Table 3.3.1.4-1 (page 1 of 5)
ESF Actuation Instrumentation

FUNCTION	APPLICABLE MODES OR OTHER SPECIFIED CONDITIONS	REQUIRED CHANNELS	APPLICABLE CONDITIONS	SURVEILLANCE REQUIREMENTS	ALLOWABLE VALUE
STD DEP T1 3.4-1					
1. Low Pressure Core Flooder Actuation.					
1.c LPFL System Initiation.	*1,2,3, 4[g],5[g]*	*2 per subsystem[b]*	*B~~, C~~*		
1.d LPFL Device Actuation.	*1,2,3, 4[g],5[g]*	*1 per actuated device[c]*	~~*D*~~ B	~~*SR 3.3.1.4.3*~~	
1.e LPFL Manual Initiation.	*1,2,3, 4[g],5[g]*	*2 per subsystem[d]*	~~*B,*~~ *F*		
STD DEP T1 3.4-1					
2. High Pressure Core Flooder Actuation.					
2.d HPCF System Initiation.	*1,2,3, 4[g],5[g]*	*2 per subsystem[b]*	*B~~, C~~*		
2.e HPCF Device Actuation.	*1,2,3, 4[g],5[g]*	*1 per actuated device[c]*	~~*D*~~ B	~~*SR 3.3.1.4.3*~~	
2.f HPCF B Manual Initiation.	*1,2,3, 4[g],5[g]*	*2[d]*	~~*B,*~~ *F*		
2.g HPCF C Diverse Logic *Manual Initiation.*					
STD DEP T1 3.4-1					
3. Reactor Core Isolation Cooling System Actuation.					
3.c RCIC System Initiation.	*1,2[e],3[e]*	*2[b]*	*B~~, C~~*		

3.d RCIC Device Actuation.	*1,2[e],3[e]*	*1 per actuated device[c]*	~~*D*~~ B	~~*SR 3.3.1.4.3*~~
3.e RCIC Manual Initiation.	*1,2[e],3[e]*	*2[d]*	~~*B,*~~ *F*	
STD DEP T1 3.4-1 *4. Automatic Depressurization System.*				
4.a ADS System Initiation.	*1,2[f],3[f] ~~4[f],5[f]~~*	*2 per subsystem[b]*	*H, I*	
4.b ADS Device Actuation.	*1,2[f],3[f] ~~4[f],5[f]~~*	*2 per ADS valve[c]*	*H, I*	~~*SR 3.3.1.4.3*~~
4.c ADS Manual Initiation.	*1,2[f],3[f] ~~4[f],5[f]~~*	2 *per subsystem[d]*	*H, I*	
4.f ATWS Manual ADS Inhibit.	*1,2*	2 *per subsystem[d]*	*H, I*	
STD DEP T1 3.4-1 *5. Diesel-Generator Actuation.*				
5.c DG System Initiation.	*1,2,3, 4[h],5[h]*	~~*2*~~ 1 *per DG[b]*	*B,* ~~*C*~~	
5.d DG Device Actuation.				~~*SR 3.3.1.4.3*~~
5.e DG Manual Initiation.	*1,2,3, 4[h],5[h]*	~~*2*~~ 1 *per DG[d]*	~~*B,*~~ *F*	
STD DEP T1 3.4-1 *6. Standby Gas Treatment System Actuation.*				
6.a SGTS Initiation.	*1,2,3 (i)(j)*	*1 per subsystem[b]*	*B,* ~~*C*~~	
6.b SGTS Device Actuation.				~~*SR 3.3.1.4.3*~~
STD DEP T1 3.4-1 *7. Reactor Building Cooling Water/Service Water Actuation.*				

7.a	RCW/RSW System Initiation.	1,2,3, 4[g],5[g]	~~2~~ 1 per subsystem[b]	B~~, C~~		
7.b	RCW/RSW Device Actuation.				~~SR 3.3.1.4.3~~	
7.c	RCW/RSW Manual Initiation.	1,2,3, 4[g],5[g]	~~2~~ 1 per subsystem[d]	~~B,~~ F		
STD DEP T1 3.4-1 8.	Containment Atmospheric Monitoring.					
8.a	CAM System Initiation.	1,2,3	~~2~~ 1 per subsystem[b]	B~~, C~~		
8.b	CAM Device Actuation.				~~SR 3.3.1.4.3~~	
STD DEP T1 3.4-1 9.	Suppression Pool Cooling Actuation.					
9.a	SPC System Initiation.	1,2,3, 4[g],5[g]	~~2~~ 1 per subsystem[b]	B~~, C~~		
9.b	SPC Device Actuation.				~~SR 3.3.1.4.3~~	
9.c	SPC Manual Initiation.	1,2,3, 4[g],5[g]	~~2~~ 1 per subsystem[d]	~~B,~~ F		
STD DEP T1 3.4-1 10.	Containment Isolation Valves Actuation.					
10.a	CIV System Initiation.	1,2,3 ~~(i)(j)~~	~~2~~ 1 per division[b]	B~~, C~~		
10.b	CIV Device Actuation.	1,2,3 ~~(i)(j)~~	1 per actuated device[c]	D	~~SR 3.3.1.4.3~~	
10.e	RCW Inside Drywell System Isolation Initiation.	1,2,3	2 per division[b]	B	SR 3.3.1.4.3 SR 3.3.1.4.4	NA

10.f RCW Inside Drywell Isolation Device Actuation.	1,2,3	1 per actuated device[c]	D	SR 3.3.1.4.2 SR 3.3.1.4.4	NA
10.g Exhaust Air Radiation – High Isolation Initiation.	1,2,3, (i),(j)	1 per division[b]	B	SR 3.3.1.4.3 SR 3.3.1.4.4	NA
10.h Exhaust Air Radiation – High Isolation Device Actuation.	1,2,3, (i),(j)	1 per actuated device[c]	D	SR 3.3.1.4.2 SR 3.3.1.4.4	NA
STD DEP T1 3.4-1 *11. CIV Divisional Manual Initiation.*	*1,2,3 (~~j~~ i)*	*~~2~~ 1 per division[d]*	*~~B, C~~ F*		
STD DEP T1 3.4-1 *12. Reactor Core Isolation Cooling Isolation Actuation.*					
12.a RCIC System Isolation Initiation.	*1,2,3*	*~~2~~ 1 per division[b]*	*B~~, C~~*		
12.b RCIC Isolation Device Actuation.				*~~SR 3.3.1.4.3~~*	
12.c RCIC Manual Isolation Initiation.	*1,2,3*	*~~2~~ 1 per division[d]*	*~~B,~~ F*		
STD DEP T1 2.4-3 *~~12.d RCIC Turbine Exhaust Diaphragm Pressure – High.~~*	*~~1,2,3~~*	*~~2 per division[a]~~*	*~~I~~*	*~~SR 3.3.1.4.1~~* *~~SR 3.3.1.4.3~~* *~~SR 3.3.1.4.4~~* *~~SR 3.3.1.4.6~~*	*~~≥ [ ] MPaG~~*
STD DEP T1 3.4-1 *13. Reactor Water Cleanup Isolation Actuation.*					
13.a CUW System Isolation Initiation.	*1,2,3 (i)*	*~~2~~ 1 per division[b]*	*B~~, C~~*		
13.b CUW Isolation Device Actuation.				*~~SR 3.3.1.4.3~~*	

STD DEP 16.3-94						
13.c	*CUW Isolation on SLC Initiation.*	*1,2,~~3~~*				
STD DEP T1 3.4-1						
STD DEP 16.3-50						
14.	*Shutdown Cooling System Isolation Actuation.*					
14.a	*SD Cooling System Isolation Initiation.*	1,*2,3, (i)*	*~~2~~ 1 per division*[b]	*B~~, C~~*	*SR 3.3.1.4.3* *SR 3.3.1.4.4*	*NA*
14.b	*SD Cooling Isolation Device Actuation.*	1,*2,3, (i)*			*~~SR 3.3.1.4.3~~*	
STD DEP T1 2.4-2						
15.	Feedwater Line Break Mitigation Actuation.					
15.a	Feedwater Line Break Mitigation Initiation.	1,2,3	1 per division[b]	B	SR 3.3.1.4.3 SR 3.3.1.4.4 SR 3.3.1.4.5	NA
15.b	Feedwater Line Break Mitigation Device Actuation.	1,2,3	1 per actuated device[c]	B	SR 3.3.1.4.2 SR 3.3.1.4.4 SR 3.3.1.4.5	NA

STD DEP 16.3-86

(d) These are manual ~~initiation~~ channel Functions.

3.3 INSTRUMENTATION

3.3.2.1 Startup Range Monitor (SRNM) Instrumentation

The information in this section of the reference ABWR DCD, including all subsections, is incorporated by reference with no departures or supplements.

3.3 INSTRUMENTATION

3.3.3.1 Essential ~~Multiplexing System~~ Communication Function (~~EMS~~ ECF)

The information in this section of the reference ABWR DCD, including all subsections, is incorporated by reference with the following departure.

STD DEP T1 3.4-1

LCO 3.3.3.1 Four divisions of ~~EMS~~ ECF data transmission shall be OPERABLE.

ACTIONS

CONDITION	REQUIRED ACTION	COMPLETION TIME
A. One or more data transmission segments inoperable in one ~~EMS~~ ECF division with data transmission maintained.	----------NOTE---------- LCO 3.0.4 is not applicable. ---------- A.1 Restore all data transmission segments to OPERABLE status.	Prior to entering MODE 2 following next MODE 4 entry.
B. One or more data transmission segments inoperable in two or more ~~EMS~~ ECF divisions with data transmission maintained in all divisions.	B.1 Restore all data transmission segments in at least three ~~EMS~~ ECF divisions to OPERABLE status.	[30] days
D. One or more ~~EMS~~ ECF divisions inoperable.	----------NOTE---------- LCO 3.0.4 is not applicable. ---------- D.1 Declare affected Functions and supported features inoperable.	4 hours

3.3 INSTRUMENTATION

3.3.4.1 Anticipated Transient Without Scram (ATWS) and End-of-Cycle Recirculation Pump Trip (EOC-RPT) Instrumentation

The information in this section of the reference ABWR DCD, including all subsections, is incorporated by reference with the following departure.

STD DEP 16.3-38

ACTIONS

CONDITION	*REQUIRED ACTION*	*COMPLETION TIME*
STD DEP 16.3-38 *A. One or more Functions with one inoperable channel.*	*----------NOTE---------- Applies only to Functions 1, 3, 5, 11, and 14 in Table 3.3.4.1-1. ----------*	
	A.1 ~~*Place channel(s) in bypass.*~~	~~*6 hours*~~
	~~*AND*~~	
	~~*A.1.2.1*~~ *Restore channel to OPERABLE status.*	*14 days*
	~~*OR*~~	
	~~*A.1.2.2 Place channel(s) in trip.*~~	~~*14 days*~~
	~~*OR*~~	
	~~*A.2 Place channel(s) in trip.*~~	~~*6 hours*~~
STD DEP 16.3-38 *B. One or more Functions with two or more channels inoperable.*	~~*----------NOTE---------- Applies only to Functions 1, 3, 5, 11, and 14 in Table 3.3.4.1-1. ----------*~~	
	B.1 ----------NOTE---------- Applies only to Functions 1, 3, 5, and 11 in Table 3.3.4.1-1. ---------- *Restore two channels to OPERABLE status.*	*72 hours*

CONDITION	REQUIRED ACTION	COMPLETION TIME
	OR B.2 ----------NOTE---------- Applies only to Function 14 in Table 3.3.4.1-1. ---------- Restore one channel to OPERABLE status.	 72 hours
STD DEP 16.3-38 *C. One or more Functions with one channel inoperable.*	*----------NOTE----------* *Applies only to Functions 2~~,~~ and 4~~, and 9~~ in Table 3.3.4.1-1.* ---------- *C.1.1 Place channel(s) in bypass.* *AND* *C.1.2.1 Restore channel(s) to OPERABLE status.* *OR* *C.1.2.2 Place channel(s) in trip.* *OR* *C.2 Place channel(s) in trip.*	 *6 hours* *30 days* *30 days* *6 hours*
STD DEP 16.3-38 D. One channel inoperable.	----------NOTE---------- Applies only to Function 9 in Table 3.3.4.1-1. ---------- D.1 Restore channel to OPERABLE status.	 30 days
STD DEP 16.3-38 ~~D~~E. *One or more Functions with two channels inoperable.*	*----------NOTE----------* *Applies only to Functions 2, 4, and 9 in Table 3.3.4.1-1.* ---------- ~~D~~E.*1 Restore one inoperable channel to OPERABLE status.*	 *72 hours*

CONDITION	REQUIRED ACTION	COMPLETION TIME
STD DEP 16.3-38 ~~E~~F. *One or more Functions with three or more channels inoperable.*	----------NOTE---------- *Applies only to Functions 2, 4, and 9 in Table 3.3.4.1-1.* ---------- ~~E~~F.1 *Restore at least one inoperable channel to OPERABLE status*	*[24] hours*
STD DEP 16.3-38 ~~F~~G. *Required Action and associated Completion Time of Condition C, ~~D~~E, or ~~E~~F not met.*	----------NOTE---------- *Applies only to Function 4 in Table 3.3.4.1-1.* ---------- ~~F~~G.1 *Apply the MCPR limit for inoperable EOC-RPT as specified in the COLR.* *OR* ~~F~~G.2 *Reduce power to ≤ 40% RTP.*	 *[2] hours* *[2] hours*
STD DEP 16.3-38 ~~G~~H. *One or more Functions with one or more channels inoperable.*	----------NOTE---------- *Applies only to Functions 6, 7, 8, 10, 12, 13, 15, and 16 in Table 3.3.4.1-1.* ---------- ~~G~~H.1 *Restore channels to OPERABLE status.*	 *[24] hours*
STD DEP 16.3-38 ~~H~~I. *Required Action and associated Completion time not met.*	~~H~~I.1 ----------NOTE---------- *Applies only to Functions 6, 7, 8, and 16 in Table 3.3.4.1-1.* ---------- ~~*Declare affected Functions and supported features inoperable*~~. Remove the associated Reactor Internal Pump from service.	 ~~*Immediately*~~12 hours

CONDITION	REQUIRED ACTION	COMPLETION TIME
	OR	
	~~H~~I.2 ----------NOTE---------- Applies only to Functions 1, 2, 3, 5, 9, 10, 11, 12, 13, 14, and 15 in Table 3.3.4.1-1. ----------	
	Be in MODE 3.	12 hours

Table 3.3.4.1-1 (page 1 of 1)
ATWS and EOC-RPT Instrumentation

FUNCTION	*REQUIRED CHANNELS*	*APPLICABLE MODES OR OTHER SPECIFIED CONDITIONS*	*SURVEILLANCE REQUIREMENTS*	*ALLOWABLE VALUES*
STD DEP 16.3-38				
9. RPS Scram Follow Signal.	*4*	*1,2*	*~~SR 3.3.4.1.2~~* *SR 3.3.4.1.4* *SR 3.3.4.1.6*	*NA*
STD DEP 16.3-38				
14. ATWS-ARI Valve Actuation.	*~~3~~* 2	*1,2*	*SR 3.3.4.1.4*	*NA*

STD DEP 16.3-38
(a) ~~≤ [ ] seconds for RIPs [A, D, F, J, B, E, & H] and~~ ≤ [ ] seconds for RIPs [C, G, & K].

3.3 INSTRUMENTATION

3.3.4.2 Feedwater Pump and Main Turbine Trip Instrumentation

The information in this section of the reference ABWR DCD, including all subsections, is incorporated by reference with the following departure and site-specific supplement. The site-specific supplement partially addresses COL License Information Item 16.1

STD DEP 16.3-39

LCO 3.3.4.2 ~~*Three channels of*~~ The following *feedwater* pump *and main turbine trip instrumentation shall be OPERABLE*~~.~~:

a. Three instrumentation channels;

b. Three digital controllers; and

c. Two termination modules per operating feedwater pump and the main turbine.

APPLICABILITY:

----------*NOTE*----------
Separate Condition entry is allowed for each instrumentation *channel*, digital controller, or termination module.

ACTIONS

CONDITION	*REQUIRED ACTION*	*COMPLETION TIME*
A. One ~~*feedwater and main turbine trip*~~ instrumentation *channel inoperable.*	*A.1* ~~*Place channel in trip*~~.	~~*6 hours*~~
	~~*OR*~~	
	~~*A.2.1 Place channel in bypass.*~~	~~*6 hours*~~
	~~*AND*~~	
	~~*A.2.2.1*~~ *Restore* instrumentation *channel to OPERABLE status.*	*14 days*
	~~*OR*~~	
	~~*A.2.2.2 Place channel in trip.*~~	~~*14 days*~~
B. ~~*Two or more feedwater and main turbine trip channels inoperable*~~ One digital controller inoperable.	*B.1 Restore* ~~*two channels*~~ digital controller *to OPERABLE status.*	~~*72 hours*~~14 days

CONDITION	*REQUIRED ACTION*	*COMPLETION TIME*
C. Two or more instrumentation channels inoperable.	C.1 Restore two instrumentation channels to OPERABLE status.	72 hours
D. Two or more digital controllers inoperable.	D.1 Restore two digital controllers to OPERABLE status.	72 hours
E. One or more termination modules inoperable.	E.1 Restore termination module to OPERABLE status.	72 hours
~~C~~F. *Required Action and associated Completion Time not met.*	~~C~~F.*1* *Reduce THERMAL POWER to < 25% RTP.*	*4 hours*

SURVEILLANCE REQUIREMENTS

SURVEILLANCE		*FREQUENCY*
SR 3.3.4.2.1	*Perform ~~SENSOR~~ CHANNEL CHECK.*	*24 hours*
SR 3.3.4.2.2	----------NOTE---------- When performing the functional test entry into associated Conditions and Required Actions may be delayed up to 2 hours. ---------- *Perform CHANNEL FUNCTIONAL TEST.*	*[92] days*
SR 3.3.4.2.3	*Perform ~~SENSOR~~ CHANNEL CALIBRATION. The allowable value shall be ≤ [ ] inches.*	*18 months*
SR 3.3.4.2.4	*Perform LOGIC SYSTEM FUNCTIONAL TEST including ~~[valve]~~* trip *actuation.*	*18 months*

3.3 INSTRUMENTATION

3.3.5.1 Control Rod Block Instrumentation

The information in this section of the reference ABWR DCD, including all subsections, is incorporated by reference with the following departures.

STD DEP 16.3-64
STD DEP 16.3-65

ACTIONS

CONDITION	*REQUIRED ACTION*	*COMPLETION TIME*
STD DEP 16.3-64		
B. Two ATLM channels inoperable.	*B.2 Verify RCIS blocks control rod movement by attempting to withdraw one rod or one gang ~~or~~ of rods.*	*4 hours* *AND* *Once per 4 hours thereafter*

SURVEILLANCE REQUIREMENTS

SURVEILLANCE		*FREQUENCY*
STD DEP 16.3-65		
SR 3.3.5.1.1	*----------NOTE----------* *Not required to be performed until 1 hour after THERMAL POWER is > [~~10~~ 30]% RTP.* *----------* *Perform CHANNEL FUNCTIONAL TEST.*	*[92] days*

3.3 INSTRUMENTATION

3.3.6.1 Post Accident Monitoring (PAM) Instrumentation

The information in this section of the reference ABWR DCD, including all subsections, is incorporated by reference with the following departures.

STD DEP T1 2.3-1
STD DEP T1 2.14-1
STD DEP 7.5-1
STD DEP 16.3-78

The design departure describing the elimination of hydrogen recombiners from the certified design was provided in ABWR Licensing Topical Report (LTR) NEDE-33330P, "Advanced Boiling Water Reactor (ABWR) Hydrogen Recombiner Requirements Elimination," May 2007. The information on pages C-108, C-109, and C-110 is incorporated by reference.

STD DEP T1 2.14-1

ACTIONS

CONDITION	*REQUIRED ACTION*	*COMPLETION TIME*
C. One or more Functions with two required channels inoperable.	~~*NOTE*~~ ~~*This Action is not applicable to Functions 11 and 12.*~~ *C.1 Restore at least one inoperable channel to OPERABLE status.*	*7 days*
~~*D. Two required hydrogen/oxygen monitor channels inoperable.*~~	~~*D.1 Restore one required hydrogen/oxygen monitor channel to OPERABLE status.*~~	~~*72 hours*~~
~~*E*~~D. *Required Action and associated Completion Time of Condition C* ~~*or D*~~ *not met.*	~~*E*~~D.*1 Enter the Condition referenced in Table 3.3.6.1-1 for the channel.*	*Immediately*
~~*F*~~E. *As required by Required Action* ~~*E*~~D.*1 and referenced in Table 3.3.6.1-1.*	~~*F*~~E.*1 Be in MODE 3.*	*12 hours*

~~G~~F. As required by Required Action ~~E~~D.1 and referenced in Table 3.3.6.1-1.	~~G~~F.1 Provide alternate method of monitoring, determine the cause of the inoperability, and submit plans and schedule for restoring the instrumentation channels of the Functions to OPERABLE status to the NRC.	14 days

STD DEP 7.5-1
STD DEP T1 2.14-1
STD DEP T1 2.3-1
STD DEP 16.3-78

Table 3.3.6.1-1 (page 1 of 1)
Post Accident Monitoring Instrumentation

FUNCTION	*REQUIRED CHANNELS*	*CONDITIONS REFERENCED FROM REQUIRED ACTION ~~F~~E.1*
1. Reactor Steam Dome Pressure.	*2*	~~F~~E
2. Reactor Vessel Water Level - Wide Range.	*2*	~~F~~E
3. Reactor Vessel Water Level - Fuel Zone.	*2*	~~F~~E
4. Suppression Pool Water Level.	*2*	~~F~~E
5. Containment Pressure.		
5a. Drywell Pressure.	*2*	~~F~~E
*5b. ~~Wide Range Containment~~*Wetwell *Pressure.*	*2*	~~F~~E
6. Drywell Area Radiation.	*2*	~~G~~F
7. Wetwell Area Radiation.	*2*	~~G~~F
8. PCIV Position.	*2 per penetration flow path* [(a),(b)]	~~F~~E
9. Startup Range Neutron Monitor - Neutron Flux.	*2*[(c)]	~~F~~E
10. Average Power Range Monitor - Neutron Flux.	*2*[(d)]	~~F~~E
~~11. Containment Atmospheric Monitors - Drywell H_2 & O_2 Analyzer.~~	~~2~~	~~F~~
~~12. Containment Atmospheric Monitors - Wetwell H_2 & O_2 Analyzer.~~	~~2~~	~~F~~
~~13. Containment Water Level.~~	~~2~~	~~F~~
*1~~4~~*1*.Suppression Pool Water Temperature.*	*2*[(e)]	~~F~~E
*1~~5~~*2*.Drywell Atmosphere Temperature.*	*2*	~~F~~E
~~16. Main Steam Line Radiation.~~	~~2~~	~~F~~
13. Wetwell Atmosphere Temperature	2	E

3.3 INSTRUMENTATION

3.3.6.2 Remote Shutdown System

The information in this section of the reference ABWR DCD, including all subsections, is incorporated by reference with the following departures.

STD DEP T1 2.14-1
STD DEP 8.3-1
STD DEP 16.3-59
STD DEP 16.3-60

STD DEP T1 8.3-1

The design departure describing the elimination of hydrogen recombiners from the certified design was provided in ABWR Licensing Topical Report (LTR) NEDE-33330P, "Advanced Boiling Water Reactor (ABWR) Hydrogen Recombiner Requirements Elimination." The information on pages C-111 is incorporated by reference.

Table 3.3.6.2-1 (page 1 of 2)
Remote Shutdown System Instrumentation

FUNCTION (INSTRUMENT OR CONTROL PARAMETER)	*REQUIRED NUMBER OF DIVISIONS*
STD DEP 16.3-59	
13. RPV ~~Narrow~~ Shutdown *Range Water Level.*	*2*
STD DEP T1 2.14-1 STD DEP 16.3-60	
17. ~~Cooling Water Flow to Flammability Control System~~ RSW Strainer Differential Pressure.	~~1~~2

Table 3.3.6.2-1 (page 2 of 2)
Remote Shutdown System Instrumentation

FUNCTION (INSTRUMENT OR CONTROL PARAMETER)	*REQUIRED NUMBER OF DIVISIONS*
STD DEP 8.3-1	
21. ~~Electric Power Distribution~~ Medium Voltage Power Distribution System *Controls.*	*2(c)*

3.3 INSTRUMENTATION

3.3.7.1 Control Room Habitability Area (CRHA) Emergency Filtration (EF) System Instrumentation

The information in this section of the reference ABWR DCD, including all subsections and tables, is incorporated by reference with the following departure.

STD DEP 16.3-61

Table 3.3.7.1-1 (page 1 of 1)
Control Room Habitability Area – Emergency Filtration System Instrumentation

~~*(a) During operations with a potential for draining the reactor vessel.*~~
~~*(b) During movement of irradiated fuel assemblies in the secondary containment.*~~

3.3 INSTRUMENTATION

3.3.8.1 Electric Power Monitoring

The information in this section of the reference ABWR DCD, including all subsections, is incorporated by reference with no departures or supplements.

3.3 INSTRUMENTATION

3.3.8.2 Reactor Coolant Temperature Monitoring-Shutdown

The information in this section of the reference ABWR DCD, including all subsections, is incorporated by reference with no departures or supplements.

3.4 REACTOR COOLANT SYSTEM

3.4.1 Reactor Internal Pumps (RIPs) - Operating

The information in this section of the reference ABWR DCD, including all subsections, is incorporated by reference with the following departure.

STD DEP 16.3-5

SURVEILLANCE REQUIREMENTS

SURVEILLANCE		*FREQUENCY*
SR 3.4.1.1	*Verify at least the required number of RIPs are ~~OPERABLE~~* operating *at any THERMAL POWER level.*	*24 hours*

3.4 REACTOR COOLANT SYSTEM (RCS)

3.4.2 Safety/Relief Valves (S/RVs)

The information in this section of the reference ABWR DCD, including all subsections, is incorporated by reference with the following departure.

STD DEP T1 2.1-1

SURVEILLANCE REQUIREMENTS

SURVEILLANCE		*FREQUENCY*
SR 3.4.2.1	*Verify the safety function lift setpoints of the required S/RVs are as follows:* *Number of Setpoint* *S/RVs* *(MPaG)* *2* ~~*7.92 ± 0.0792*~~ 8.00± 0.24 *4* ~~*7.99 ± 0.0799*~~ 8.07± 0.24 *4* ~~*8.06 ± 0.0806*~~ 8.14± 0.24 *4* ~~*8.13 ± 0.0813*~~ 8.20± 0.25 *4* ~~*8.19 ± 0.0819*~~ 8.27± 0.25 *Following testing, lift settings shall be within ± 1%.*	*In accordance with the Inservice Testing Program*

3.4 REACTOR COOLANT SYSTEM (RCS)

3.4.3 RCS Operational LEAKAGE

The information in this section of the reference ABWR DCD, including all subsections, is incorporated by reference with the following departure.

STD DEP 7.3-12

LCO 3.4.3 *RCS operational LEAKAGE shall be limited to:*

a. *No pressure boundary LEAKAG;*

b. *≤ ~~3.785~~* 19 *L/min unidentified LEAKAGE; ~~and~~*

c. *≤ ~~98.4~~* 114 *L/min total LEAKAGE averaged over the previous 24 hour period~~.~~*; and

d. ≤ 8 L/min increase in unidentified LEAKAGE within previous 4 hour period in MODE 1.

CONDITION	REQUIRED ACTION	COMPLETION TIME
A. *Unidentified LEAKAGE not within limit.* *OR* *Total LEAKAGE not within limit.*	A.1 *Reduce LEAKAGE to within limits.*	*4 hours*
B. Unidentified LEAKAGE increase not within limit.	B.1 Reduce LEAKAGE to within limits. OR B.2 Verify source of unidentified LEAKAGE increase is not service sensitive type 304 or type 316 austenitic stainless steel.	4 hours
~~B~~C. *Required Action and associated Completion Time of Condition A* or B *not met.* *OR* *Pressure boundary LEAKAGE exists.*	~~B~~C.1 *Be in MODE 3.* *AND* ~~B~~C.2 *Be in MODE 4.*	*12 hours* *36 hours*

SURVEILLANCE REQUIREMENTS

SURVEILLANCE	FREQUENCY
SR 3.4.3.1 *Verify RCS unidentified*, ~~and~~ *total LEAKAGE* and unidentified LEAKAGE increase are within limits.	*8 hours*

3.4 REACTOR COOLANT SYSTEM (RCS)

3.4.4 RCS Pressure Isolation Valve (PIV) Leakage

The information in this section of the reference ABWR DCD, including all subsections, is incorporated by reference with no departures or supplements.

3.4 REACTOR COOLANT SYSTEM (RCS)

3.4.5 RCS Leakage Detection Instrumentation

The information in this section of the reference ABWR DCD, including all subsections, is incorporated by reference with no departures or supplements.

3.4 REACTOR COOLANT SYSTEM (RCS)

3.4.6 RCS Specific Activity

The information in this section of the reference ABWR DCD, including all subsections, is incorporated by reference with no departures or supplements.

3.4 REACTOR COOLANT SYSTEM (RCS)

3.4.7 Residual Heat Removal (RHR) Shutdown Cooling System-Hot Shutdown

The information in this section of the reference ABWR DCD, including all subsections, is incorporated by reference with no departures or supplements.

3.4 REACTOR COOLANT SYSTEM (RCS)

3.4.8 Residual Heat Removal (RHR) Shutdown Cooling System-Cold Shutdown

The information in this section of the reference ABWR DCD, including all subsections, is incorporated by reference with no departures or supplements.

3.4 REACTOR COOLANT SYSTEM (RCS)

3.4.9 RCS Pressure and Temperature (P/T) Limits

The information in this section of the reference ABWR DCD, including all subsections, is incorporated by reference with the following site-specific supplements. The site-specific supplements partially address COL License Information Item 16.1.

SR 3.4.9.4	*----------NOTE----------* *Not required to be performed until 30 minutes after RCS temperature ≤ [27 °C] in MODE 4.* *----------* *Verify reactor vessel flange and head flange temperatures are within the limits specified in the PTLR.*	*30 minutes*
SR 3.4.9.5	*----------NOTE----------* *Not required to be performed until 12 hours after RCS temperature ≤ [38 °C] in MODE 4.* *----------* *Verify reactor vessel flange and head flange temperatures are within the limits specified in the PTLR.*	*12 hours*

3.4 REACTOR COOLANT SYSTEM

3.4.10 Reactor Steam Dome Pressure

The information in this section of the reference ABWR DCD, including all subsections, is incorporated by reference with no departures or supplements.

3.5 EMERGENCY CORE COOLING SYSTEMS (ECCS)

3.5.1 ECCS-Operating

The information in this section of the reference ABWR DCD, including all subsections and figures, is incorporated by reference with the following departure and site-specific supplements. The site-specific supplements partially address COL License Information Item 16.1.

STD DEP 8.3-1

The ABWR plant medium voltage electrical system design change was provided in ABWR Licensing Topical Report (LTR) NEDO-33335, "Plant Medium Voltage Electrical System Design," dated May 2007. The information from the markup of ABWR TS pages 3.5-1 and 3.5-2 is incorporated by reference.

3.5 EMERGENCY CORE COOLING SYSTEMS (ECCS)

3.5.2 ECCS-Shutdown

The information in this section of the reference ABWR DCD, including all subsections, is incorporated by reference with no departures or supplements.

3.6 CONTAINMENT SYSTEMS

3.6.1.1 Primary Containment

The information in this section of the reference ABWR DCD, including all subsections, is incorporated by reference with no departures or supplements.

3.6 CONTAINMENT SYSTEMS

3.6.1.2 Primary Containment Air Locks

The information in this section of the reference ABWR DCD, including all subsections, is incorporated by reference with the following departure.

STD DEP 16.3-69

B. One or more primary containment air locks with primary containment air lock interlock mechanism inoperable.	*----------NOTES----------* *1. Required Actions B.1, B.2, and B.3 are not applicable if both doors in the same air lock are inoperable and Condition C is entered.* *2. Entry into and exit from containment is permissible under the control of a dedicated individual.* *----------*	
	B.1 Verify an OPERABLE door is closed in the affected air lock(s).	*1 hour*
	AND	
	B.2 Lock an OPERABLE door closed in the affected air lock(s).	*24 hours*
	AND	
	B.3 ----------NOTE---------- *Air lock doors in high radiation areas or areas with limited access due to inerting may be verified locked closed by administrative means.* *----------* *Verify an OPERABLE door is locked closed in the affected air lock(s).*	*Once per 31 days*

3.6 CONTAINMENT SYSTEMS

3.6.1.3 Primary Containment Isolation Valves (PCIVs)

The information in this section of the reference ABWR DCD, including all subsections, is incorporated by reference with the following departures and site-specific supplements. The site-specific supplements partially address COL License Information Item 16.1.

STD DEP 6.2-1

STD DEP 16.3-71

STD DEP 16.3-72

ACTIONS

----------*NOTES*----------

STD DEP 16.3-71

1. *Penetration flow paths ~~except for purge valve penetration flow paths~~may be unisolated intermittently under administrative controls.*

2. *Separate Condition entry is allowed for each penetration flow path.*

3. *Enter applicable Conditions and Required Actions for systems made inoperable by PCIVs.*

4. *Enter applicable Conditions and Required Actions of LCO 3.6.1.1, "Primary Containment," when PCIV leakage results in exceeding overall containment leakage rate acceptance criteria.*

CONDITION	*REQUIRED ACTION*	*COMPLETION TIME*
A. ----------*NOTE*---------- *Only applicable to penetration flow paths with two PCIVs.* ---------- STD DEP 16.3-71 *One or more penetration flow paths with one PCIV inoperable except for purge valve leakage,* main steam line isolation valve leakage, or hydrostatically tested line leakage, *not within limit.*	*A.1* *Isolate the affected penetration flow path by use of at least one closed and de-activated automatic valve, closed manual valve, blind flange, or check valve with flow through the valve secured.* *AND*	*4 hours except for main steam line* *AND* *8 hours for main steam line*

ACTIONS

CONDITION	*REQUIRED ACTION*	*COMPLETION TIME*
A. (continued)	*A.2* ----------NOTE---------- *Valves and blind flanges in high radiation areas may be verified by use of administrative means.* ----------	
	Verify the affected penetration flow path is isolated.	*Once per 31 days for isolation devices outside primary containment, drywell, and steam tunnel* *AND* *Prior to entering MODE 2 or 3 from MODE 4, if primary containment was de-inerted while in MODE 4, if not performed within the previous 92 days, for isolation devices inside primary containment*

ACTIONS (continued)

CONDITION	*REQUIRED ACTION*	*COMPLETION TIME*
B. *----------NOTE----------* *Only applicable to penetration flow paths with two PCIVs.* *----------* STD DEP 16.3-71 *One or more penetration flow paths with two PCIVs inoperable except for purge valve leakage*, main steam isolation valve leakage, or hydrostatically tested line leakage *not within limit.*	*B.1* *Isolate the affected penetration flow path by use of at least one closed and de-activated automatic valve, closed manual valve, or blind flange.*	*1 hour*
C. *----------NOTE----------* *Only applicable to penetration flow paths with only one PCIV.* *----------* *One or more penetration flow paths with one PCIV inoperable.*	*C.1* *Isolate the affected penetration flow path by use of at least one closed and de-activated automatic valve, closed manual valve, or blind flange.* *AND* *C.2* *----------NOTE----------* *Valves and blind flanges in high radiation areas may be verified by use of administrative means.* *----------* *Verify the affected penetration flow path is isolated.*	*4 hours except for excess flow check valves (EFCVs)* *AND* *12 hours for EFCVs* *Once per 31 days*

ACTIONS (continued)

CONDITION	*REQUIRED ACTION*	*COMPLETION TIME*
STD DEP 16.3-71 ~~*D. One or more penetration flow paths with one or more containment purge valves not within purge valve leakage limits.*~~	~~*D.1 Isolate the affected penetration flow path by use of at least one [closed and de-activated automatic valve, closed manual valve, or blind flange].*~~ ~~*AND*~~ ~~*D.2 NOTE*~~ ~~*Valves and blind flanges in high radiation areas may be verified by use of administrative means.*~~ ~~*Verify the affected penetration flow path is isolated.*~~ ~~*AND*~~ ~~*D.3 Perform SR 3.6.1.3.7 for the resilient seal purge valves closed to comply with Required Action D.1.*~~	~~*24 hours*~~ ~~*Once per 31 days for isolation devices outside containment*~~ ~~*AND*~~ ~~*Prior to entering MODE 4 from MODE 5 if not performed within the previous 92 days for isolation devices inside containment*~~ ~~*Once per [92] days*~~

ACTIONS (continued)

CONDITION	*REQUIRED ACTION*	*COMPLETION TIME*
STD DEP 16.3-71		
D. Purge valve leakage rate, main steam isolation valve leakage, or hydrostatically tested line leakage not within limit.	D.1 Restore leakage to within limit.	[4 hours except for main steam line isolation valve leakage AND 8 hours for main steam line isolation valve leakage]
E. Required Action and associated Completion Time of Condition A, B, or C, or D not met in MODE 1, 2, or 3.	*E.1 Be in MODE 3.* *AND* *E.2 Be in MODE 4.*	*12 hours* *36 hours*
F. Required Action and associated Completion Time of Condition A, B, or C, ~~or D~~ not met for PCIV(s) required to be OPERABLE during movement of irradiated fuel assemblies in the secondary containment.	*F.1 ----------NOTE---------- LCO 3.0.3 is not applicable. ----------* *Suspend movement of irradiated fuel assemblies in the secondary containment.*	 *Immediately*

ACTIONS (continued)

STD DEP 16.3-71 *G. Required Action and associated Completion Time of Condition A, B, or C~~, or D~~ not met for PCIV(s) required to be OPERABLE during CORE ALTERATIONS.*	*G.1*	*Suspend CORE ALTERATIONS.*	*Immediately*
H. Required Action and associated Completion Time of Condition A, B, or C~~, or D~~ not met for PCIV(s) required to be OPERABLE during MODE 4 or 5 or during operations with a potential for draining the reactor vessel (OPDRVs).	*H.1* *OR* *H.2*	*Initiate action to suspend OPDRVs.* *Initiate action to restore valve(s) to OPERABLE status.*	*Immediately* *Immediately*

STD DEP 16.3-71

SURVEILLANCE REQUIREMENTS

SURVEILLANCE	*FREQUENCY*
~~*SR 3.6.1.3.1*~~ ~~*----------NOTE----------*~~ ~~*Only required to be met in MODES 1, 2, and 3.*~~ ~~*----------*~~ ~~*Verify each 550 mm primary containment purge valve is sealed closed except for one purge valve in a penetration flow path while in Condition D of this LCO.*~~	~~*31 days*~~
STD DEP 6.2-1 *SR 3.6.1.3.~~2~~1* *----------NOTES----------* *1. Only required to be met in MODES 1, 2, and 3.* *2. Not required to be met when the ~~550~~500 mm primary containment purge valves are open for inerting, de-inerting, pressure control, ALARA or air quality considerations for personnel entry, or Surveillances that require the valves to be open.* *----------* *Verify each ~~550~~500 mm primary containment purge valve is closed.*	*31 days*
SR 3.6.1.3.~~3~~2 *----------NOTES----------* *1. Valves and blind flanges in high radiation areas may be verified by use of administrative means.* *2. Not required to be met for PCIVs that are open under administrative controls.* *----------* *Verify each primary containment isolation manual valve and blind flange that is located outside primary containment and is required to be closed during accident conditions is closed.*	*31 days*

STD DEP 16.3-71

SURVEILLANCE REQUIREMENTS (continued)

SURVEILLANCE		FREQUENCY
SR 3.6.1.3.~~4~~3	----------NOTES---------- 1. Valves and blind flanges in high radiation areas may be verified by use of administrative means. 2. Not required to be met for PCIVs that are open under administrative controls. ----------	
	Verify each primary containment isolation manual valve and blind flange that is located inside primary containment and is required to be closed during accident conditions is closed.	Prior to entering MODE 2 or 3 from MODE 4, if primary containment was de-inerted while in MODE 4, if not performed within the previous 92 days
SR 3.6.1.3.~~5~~4	Verify continuity of the automatic traversing incore prob (ATIP) shear isolation valve explosive charge.	31 days
SR 3.6.1.3.~~6~~5	Verify the isolation time of each power operated and each automatic PCIV, except MSIVs, is within limits.	In accordance with the Inservice Testing Program
SR 3.6.1.3.~~7~~6	----------NOTES---------- 1. Only required to be met in MODES 1, 2, and 3. 2. Results shall be evaluated against acceptance criteria of SR 3.6.1.1.1 in accordance with 10 CFR 50, Appendix J, as modified by approved exemptions. ----------	
	Perform leakage rate testing for each primary containment purge valve with resilient seals.	184 days AND Once within 92 days after opening the valve

SURVEILLANCE REQUIREMENTS (continued)

SURVEILLANCE		FREQUENCY
SR 3.6.1.3.~~8~~7	Verify the isolation time (i.e., total closure time exclusive of electrical delays) of each MSIV is ≥ 3 seconds and ≤ 4.5 seconds.	3 months
SR 3.6.1.3.~~9~~8	Verify each automatic PCIV actuates to the isolation position on an actual or simulated isolation signal.	18 months
SR 3.6.1.3.~~10~~9	Verify each reactor instrumentation line EFCV actuates on a simulated instrument line break to restrict flow to ≤ 1.05 cm^3/s.	18 months
SR 3.6.1.3.~~11~~10	Remove and test the explosive squib from each shear isolation valve of the ATIP System.	18 months on a STAGGERED TEST BASIS
SR 3.6.1.3.~~12~~11	----------NOTE---------- 1. Only required to be met in MODES 1, 2, and 3. 2. Results shall be evaluated against acceptance criteria of SR 3.6.1.1.1 in accordance with 10 CFR 50, Appendix J, as modified by approved exemptions. ---------- Verify the combined leakage rate of 0.277 cm^3/hr times the total number of PCIVs through hydrostatically tested lines that penetrate the primary containment is not exceeded when these isolation valves are tested at ≥ 0.294 MPaG.	18 months

SURVEILLANCE REQUIREMENTS (continued)

SURVEILLANCE		*FREQUENCY*
STD DEP 16.3-72 *SR 3.6.1.3.~~13~~12*	*----------~~NOTE~~----------* *~~Results shall be evaluated against acceptance criteria of SR 3.6.1.1.1 in accordance with 10 CFR 50, Appendix J, as modified by approved exemptions.~~* *----------* *Verify leakage rate through each MSIV is ≤ 1 m^3/h when tested at ≥ 0.170 MPaG.*	*-------NOTE------* *SR 3.0.2 is not applicable* *----------* *In accordance with 10 CFR 50, Appendix J, as modified by approved exemptions*
SR 3.6.1.3.~~14~~13 STD DEP 6.2-1	*----------NOTE----------* *Only required to be met in MODES 1, 2, and 3.* *----------* *Verify each ~~[550~~ 500 mm~~]~~ primary containment purge valve is blocked to restrict the valve from opening > [50]%.*	 *18 months*

3.6 CONTAINMENT SYSTEMS

3.6.1.4 Drywell Pressure

The information in this section of the reference ABWR DCD, including all subsections, is incorporated by reference with no departures or supplements.

3.6 CONTAINMENT SYSTEMS

3.6.1.5 Drywell Air Temperature

The information in this section of the reference ABWR DCD, including all subsections, is incorporated by reference with no departures or supplements.

3.6 CONTAINMENT SYSTEMS

3.6.1.6 Wetwell-to-Drywell Vacuum Breakers

The information in this section of the reference ABWR DCD, including all subsections, is incorporated by reference with the following departure.

STD DEP 6.2-2

SR 3.6.1.6.3	*Verify each required vacuum breaker fully opens at ≤ ~~3.43~~ 3.45 kPaD.*	*18 months*

3.6 CONTAINMENT SYSTEMS

3.6.2.1 Suppression Pool Average Temperature

The information in this section of the reference ABWR DCD, including all subsections, is incorporated by reference with the following departure.

STD DEP 16.3-32

ACTIONS

D. Suppression pool average temperature > 43.3 °C ~~but ≤ 48.9 °C~~.	*D.1* ~~*Verify*~~ Determine *suppression pool average temperature ~~is ≤ 48.9 °C~~.* AND D.2 Be in MODE 4.	*Once per 30 minutes* 36 hours
E. Suppression pool average temperature > 48.9 °C.	*E.1 Depressurize the reactor vessel to < 1.38 MPaG.* ~~*AND*~~ ~~*E.2 Be in MODE 4.*~~	*12 hours* ~~*36 hours*~~

3.6 CONTAINMENT SYSTEMS

3.6.2.2 Suppression Pool Water Level

The information in this section of the reference ABWR DCD, including all subsections, is incorporated by reference with no departures or supplements.

3.6 CONTAINMENT SYSTEMS

3.6.2.3 Residual Heat Removal (RHR) Suppression Pool Cooling

The information in this section of the reference ABWR DCD, including all subsections, is incorporated by reference with no departures or supplements.

3.6 CONTAINMENT SYSTEMS

3.6.2.4 Residual Heat Removal (RHR) Containment Spray

The information in this section of the reference ABWR DCD, including all subsections, is incorporated by reference with the following departure.

STD DEP 6.2-2

SURVEILLANCE REQUIREMENTS

SURVEILLANCE		*FREQUENCY*
SR 3.6.2.4.2	*Verify each associated (i.e., in subsystems B & C) RHR pump develops a flow rate ≥ 114 m^3/h ~~and < 160 m^3/h~~ through the wetwell spray sparger.*	*92 days*

3.6 CONTAINMENT SYSTEMS

3.6.3.1 Primary Containment Hydrogen Recombiners

The information in this section of the reference ABWR DCD, including all subsections and figures, is incorporated by reference with the following departure.

STD DEP T1 2.14-1

The ABWR hydrogen recombiner elimination evaluation was provided in ABWR Licensing Topical Report (LTR) NEDO-33330P "Hydrogen Recombiner Requirements Elimination," dated May 2007. The information from pages C-112 and C-113 is incorporated by reference.

3.6 CONTAINMENT SYSTEMS

3.6.3.2 Primary Containment Oxygen Concentration

The information in this section of the reference ABWR DCD, including all subsections, is incorporated by reference with no departures or supplements.

3.6 CONTAINMENT SYSTEMS

3.6.4.1 Secondary Containment

The information in this section of the reference ABWR DCD, including all subsections, is incorporated by reference with the following departure.

STD DEP 16.3-29

SR 3.6.4.1.4	*Verify each standby gas treatment (SGT) subsystem will draw down the secondary containment to ≥ 6.4 mm water gauge vacuum in ≤ ~~120 seconds~~* 20 minutes.	*18 months on a STAGGERED TEST BASIS*

3.6 CONTAINMENT SYSTEMS

3.6.4.2 Secondary Containment Isolation valves (SCIVs)

The information in this section of the reference ABWR DCD, including all subsections, is incorporated by reference with no departures or supplements.

3.6 CONTAINMENT SYSTEMS

3.6.4.3 Standby Gas Treatment (SGT) System

The information in this section of the reference ABWR DCD, including all subsections, is incorporated by reference with no departures or supplements.

3.7 PLANT SYSTEMS

3.7.1 Reactor Building Cooling Water (RCW) System, Reactor Service Water (RSW) System and Ultimate Heat Sink-Operating

The information in this section of the reference ABWR DCD, including all subsections, is incorporated by reference with the following departure and supplements. The site-specific supplements partially address COL License Information Item 16.1.

STD DEP 16.3-16

ACTIONS

CONDITION	*REQUIRED ACTION*	*COMPLETION TIME*
A. One RCW pump and/or one RSW pump and/or one RCW/RSW heat exchanger and/or one ~~[spray network]~~ cooling tower cell in the UHS inoperable in a single division.	*A.1 Restore pump(s) and/or heat exchanger and/or UHS ~~[spray network]~~ cooling tower cell to OPERABLE status.*	*14 days*
B. One RCW/RSW division inoperable for reasons other than Condition A. *OR* *Both ~~[spray networks]~~ cooling tower cells in one UHS division inoperable.*	*B.1 Declare associated supported required feature(s) inoperable and enter applicable Conditions and Required Actions of the LCOs for the inoperable required feature(s).* *AND* *B.2 Initiate action to restore RCW/RSW division or both UHS ~~[spray networks]~~ cooling tower cells to OPERABLE status.*	*Immediately* *Immediately*

ACTIONS (continued)

CONDITION	*REQUIRED ACTION*	*COMPLETION TIME*
C. Condition A exists in two or more RCW/RSW or UHS ~~[spray network]~~ cooling tower divisions.	*C.1 Restore one inoperable RCW/RSW or UHS ~~[spray networks]~~ cooling tower division to OPERABLE status.* STD DEP 16.3-16 ~~*AND*~~ ~~*C.2 Restore two inoperable RCW/RSW or UHS [spray network] divisions to OPERABLE status.*~~	*7 days* ~~*14 days*~~
D. Required Action and associated Completion Time of Condition A, B or C not met. *OR* *Two or more RCW/RSW divisions inoperable for reasons other than Condition C.* *OR* *UHS inoperable.* *OR* *Two or more UHS ~~[spray network]~~ cooling tower divisions inoperable for reasons other than Condition C.*	*D.1 Be in MODE 3.* *AND* *D.2 Be in MODE 4.*	*12 hours* *36 hours*

SURVEILLANCE REQUIREMENTS

SURVEILLANCE		*FREQUENCY*
SR 3.7.1.1	*Verify the water level of ~~each~~* the *UHS ~~[spray pond]~~* basin *is ≥ ~~[ ]~~*13.56 *m* (MSL).	*24 hours*
SR 3.7.1.2	*Verify the water level in each RSW pump well of the ~~intake structure~~* UHS basin *is ≥ [ ] m.*	*24 hours*
SR 3.7.1.3	*Verify the RSW water temperature at the inlet to the RCW/RSW heat exchangers is ≤ [33.3] °C.*	*24 hours*
SR 3.7.1.4	Operate each cooling tower cell fan for ≥ 15 minutes.	31 days
*SR 3.7.1.~~4~~*5	*----------NOTE----------* *Isolation of flow to individual components does not render RCW/RSW System inoperable.* *----------* *Verify each RCW/RSW division and associated UHS ~~[spray network]~~* cooling tower *division manual, power operated, and automatic valve in the flow path servicing safety related systems or components, that is not locked, sealed, or otherwise secured in position, is in the correct position.*	*31 days*

SURVEILLANCE REQUIREMENTS(continued)

SURVEILLANCE		*FREQUENCY*
SR 3.7.1.~~5~~6	*Verify each RCW/RSW division and associated UHS [~~spray network~~* cooling tower*] division actuate on an actual or simulated initiation signal.*	*18 months*

3.7 PLANT SYSTEMS

3.7.2 Reactor Building Cooling Water (RCW) System, Reactor Service Water (RSW) System and Ultimate Heat Sink-Shutdown

The information in this section of the reference ABWR DCD, including all subsections, is incorporated by reference with the following departures and site-specific supplement. The site-specific supplement partially addresses COL License Information Item 16.1.

STD DEP 16.3-16

STD DEP 16.3-46

LCO 3.7.2 *Three RCW/RSW divisions and UHS shall be OPERABLE.*

----------NOTE----------
One RCW/RSW division may be inoperable in MODE 5, and after 30 hours from initial entry into MODE 4 from MODE 3.

STD DEP 16.3-46

APPLICABILITY: *MODE 4,*
MODE 5 ~~except~~ with irradiated fuel in the reactor pressure vessel (RPV) *~~the reactor cavity to dryer/separator storage pool gate removed~~ and water level ~~≥~~ < 7.0 m over the top of the reactor pressure vessel flange.*

ACTIONS

CONDITION	*REQUIRED ACTION*	*COMPLETION TIME*
A. One RCW pump and/or one RSW pump and/or one RCW/RSW heat exchanger and/or one ~~[spray network]~~ cooling tower cell *in the UHS in one* required *division inoperable.*	*A.1 Restore pump(s) and/or heat exchanger and/or UHS ~~[spray network]~~* cooling tower cell *to OPERABLE status.*	*14 days*
B. Condition A exists in two or more required *RCW/RSW or UHS ~~[spray network]~~* cooling tower *divisions.*	*B.1 Restore one inoperable RCW/RSW or UHS ~~[spray network]~~* cooling tower *division to OPERABLE status.* STD DEP 16.3-16 ~~*AND*~~ ~~*B.2 Restore two inoperable RCW/RSW or UHS [spray network] divisions to OPERABLE status.*~~	*7 days* ~~*14 days*~~

ACTIONS (continued)

CONDITION	*REQUIRED ACTION*	*COMPLETION TIME*
C. One or more required RCW/RSW or UHS ~~[spray network]~~ cooling tower divisions inoperable for reasons other than Condition A or B.	*C.1 Enter applicable Conditions and Required Actions of LCO 3.8.11, "AC Sources – Shutdown (Low Water Level)" for diesel generator(s) made inoperable by RCW/RSW.*	*Immediately*
OR	*AND*	
UHS inoperable.	*C.2 Enter applicable Conditions and Required Actions of LCO 3.4.8, "Residual Heat Removal (RHR) – MODE 4," or LCO 3.9.8, "RHR – Low Water Level", for RHR shutdown cooling made inoperable by RCW/RSW.*	*Immediately*
OR		
Required Action and associated Completion Time of Condition A or B not met.		

SURVEILLANCE REQUIREMENTS

SURVEILLANCE		*FREQUENCY*
SR 3.7.2.1	*Verify the water level of ~~each~~* the *UHS ~~[spray pond]~~* basin *is ≥ ~~[ ]~~*13.56 *m* (MSL).	*24 hours*
SR 3.7.2.2	*Verify the water level in each RSW pump well of the ~~intake structure~~* UHS basin *is ≥ [ ] m.*	*24 hours*
SR 3.7.2.3	*Verify the RSW water temperature at the inlet to the RCW/RSW heat exchangers is ≤ [33.3] °C.*	*24 hours*
SR 3.7.2.4	Operate each cooling tower cell fan for ≥ 15 minutes.	31 days
*SR 3.7.2.~~4~~*5	*----------NOTE----------* *Isolation of flow to individual components does not render RCW/RSW System inoperable.* *----------* *Verify each RCW/RSW division and associated UHS ~~[spray network]~~* cooling tower *division manual, power operated, and automatic valve in the flow path servicing safety related systems or components, that is not locked, sealed, or otherwise secured in position, is in the correct position.*	*31 days*
*SR 3.7.2.~~5~~*6	*Verify each RCW/RSW division and associated UHS [~~spray network~~* cooling tower*] division actuate on an actual or simulated initiation signal.*	*18 months*

3.7 PLANT SYSTEMS

3.7.3 Reactor Building Cooling Water (RCW) System, Reactor Service Water (RSW) System and Ultimate Heat Sink-Refueling

The information in this section of the reference ABWR DCD, including all subsections, is incorporated by reference with the following departures and site-specific supplement. The site-specific supplement partially addresses COL License Information Item 16.1.

STD DEP 16.3-46

LCO 3.7.3 *One RCW/RSW division and UHS shall be OPERABLE.*

APPLICABILITY: *MODE 5 with ~~the reactor cavity to dryer/separator storage pool gate removed~~* irradiated fuel in the reactor pressure vessel *and water level ≥ 7.0 m over the top of the reactor pressure vessel flange.*

ACTIONS

CONDITION	*REQUIRED ACTION*	*COMPLETION TIME*
A. No RCW/RSW division OPERABLE. *OR* *UHS inoperable.* *OR* *Associated divisional UHS ~~[spray networks]~~* cooling tower *inoperable.*	*A.1 Enter applicable Conditions and Required Actions of LCO 3.8.2, "AC Sources-Refueling" for the diesel generator made inoperable by RCW/RSW.* *AND* *A.2 Enter applicable Conditions and Required Actions of LCO 3.9.7, "RHR-High Water Level", for RHR-Shutdown Cooling made inoperable by RCW/RSW.*	*Immediately* *Immediately*

SURVEILLANCE REQUIREMENTS

SURVEILLANCE		*FREQUENCY*
SR 3.7.3.1	*Verify the water level of ~~each~~* the *UHS ~~[spray pond]~~* basin *is ≥ ~~[ ]~~*13.56 *m* (MSL) .	*24 hours*
SR 3.7.3.2	*Verify the water level in each RSW pump well of the ~~intake structure~~* UHS basin *is ≥ [ ] m.*	*24 hours*
SR 3.7.3.3	*Verify the RSW water temperature at the inlet to the RCW/RSW heat exchangers is ≤ [33.3] °C.*	*24 hours*
SR 3.7.3.4	Operate each cooling tower cell fan for ≥ 15 minutes.	31 days
*SR 3.7.3.~~4~~*5	*----------NOTE----------* *Isolation of flow to individual components does not render RCW/RSW System inoperable.* *----------* *Verify* each *RCW/RSW division and associated UHS ~~[spray network]~~* cooling tower *division manual, power operated, and automatic valve in the flow path servicing safety related systems or components, that is not locked, sealed, or otherwise secured in position is in the correct position.*	*31 days*
*SR 3.7.3.~~5~~*6	*Verify each RCW/RSW division and associated UHS [~~spray network~~* cooling tower*] division actuate on an actual or simulated initiation signal.*	*18 months*

3.7 PLANT SYSTEMS

3.7.4 Control Room Habitability Area (CRHA)-Emergency Filtration (EF) System

The information in this section of the reference ABWR DCD, including all subsections, is incorporated by reference with the following departure.

STD DEP 16.3-47

SURVEILLANCE REQUIREMENTS(continued)

SURVEILLANCE		*FREQUENCY*
SR 3.7.4.4	*Verify each EF division can maintain a positive pressure of ≥ 3.2 mm water gauge relative to the atmosphere during the isolation mode of operation at a flow rate of ≤ ~~360~~ 3400 m^3/h.*	*18 months on a STAGGERED TEST BASIS*

3.7 PLANT SYSTEMS

3.7.5 Control Room Habitability Area (CRHA) – Air Conditioning (AC) System

The information in this section of the reference ABWR DCD, including all subsections, is incorporated by reference with no departures or supplements.

3.7 PLANT SYSTEMS

3.7.6 Main Condenser Offgas

The information in this section of the reference ABWR DCD, including all subsections, is incorporated by reference with no departures or supplements.

3.7 PLANT SYSTEMS

3.7.7 Main Turbine Bypass System

The information in this section of the reference ABWR DCD, including all subsections, is incorporated by reference with no departures or supplements.

3.7 PLANT SYSTEMS

3.7.8 Fuel Pool Water Level

The information in this section of the reference ABWR DCD, including all subsections, is incorporated by reference with no departures or supplements.

3.8 ELECTRICAL POWER SYSTEMS

3.8.1 AC Sources-Operating

The information in this section of the reference ABWR DCD, including all subsections, is incorporated by reference with the following departures.

STD DEP 8.3-1

STD DEP 16.3-49

STD DEP 8.3-1

The ABWR plant medium voltage electrical system design change was provided in ABWR Licensing Topical Report (LTR) NEDO-33335 "Plant Medium Voltage Electrical System Design," Rev. 0, dated May 2007. LTR pages 3.8-1, 2, 4, 6-15, 17 and 18 are incorporated by reference.

STD DEP 16.3-49

Table 3.8.1-1 (page 1 of 1)
Diesel Generator Test Schedule

(b) This test frequency shall be maintained until seven consecutive failure free starts from standby conditions and load and run tests have been performed. ~~This is consistent with Regulatory Position [ ], of Regulatory Guide 1.9, Revision 3.~~ If, subsequent to the 7 failure free tests, 1 or more additional failures occur such that there are again 4 or more failures in the last 25 tests, the testing interval shall again be reduced as noted above and maintained until 7 consecutive failure free tests have been performed.

3.8 ELECTRICAL POWER SYSTEMS

3.8.2 AC Sources-Refueling

The information in this section of the reference ABWR DCD, including all subsections, is incorporated by reference with the following departure.

STD DEP 16.3-41

ACTIONS

CONDITION	*REQUIRED ACTION*	*COMPLETION TIME*
A. Required offsite circuit inoperable.	*----------NOTE---------- Enter applicable Condition and Required Actions of LCO 3.8.10, with one required division de-energized as a result of Condition ~~B~~A . ----------*	

3.8 ELECTRICAL POWER SYSTEMS

3.8.3 Diesel Fuel Oil, Lube Oil, and Starting Air

The information in this section of the reference ABWR DCD, including all subsections, is incorporated by reference with the following departure.

STD DEP 16.3-51

ACTIONS

CONDITION	*REQUIRED ACTION*	*COMPLETION TIME*
E. One or more DGs with pressure in at least one *starting air receiver ~~pressure~~ < [ ] kPaG and ≥ [ ] kPaG.*	*E.1 Restore starting air receiver pressure to ≥ [ ] kPaG.*	*48 hours*

3.8 ELECTRICAL POWER SYSTEMS

3.8.4 DC Sources-Operating

The information in this section of the reference ABWR DCD, including all subsections, is incorporated by reference with the following departure.

STD DEP 8.3-1

The ABWR plant medium voltage electrical system design change was provided in ABWR Licensing Topical Report (LTR) NEDO-33335 "Plant Medium Voltage Electrical System Design," Rev. 0, dated May 2007. LTR page 3.8-27 is incorporated by reference.

3.8 ELECTRICAL POWER SYSTEMS

3.8.5 DC Sources-Shutdown

The information in this section of the reference ABWR DCD, including all subsections, is incorporated by reference with no departures or supplements.

3.8 ELECTRICAL POWER SYSTEMS

3.8.6 Battery Cell Parameters

The information in this section of the reference ABWR DCD, including all subsections, is incorporated by reference with the following departure.

STD DEP 16.3-58

CONDITION	*REQUIRED ACTION*	*COMPLETION TIME*
A. One or more batteries with one or more battery cell parameters not within Table 3.8.6-1 Category A or B *limits.*	*A.1 Verify pilot cells electrolyte level and float voltage meet Table 3.8.6-1 Category C limits.*	*1 hour*

3.8 ELECTRICAL POWER SYSTEMS

3.8.7 Inverters-Operating

The information in this section of the reference ABWR DCD, including all subsections, is incorporated by reference with no departures or supplements.

3.8 ELECTRICAL POWER SYSTEMS

3.8.8 Inverters-Shutdown

The information in this section of the reference ABWR DCD, including all subsections, is incorporated by reference with no departures or supplements.

3.8 ELECTRICAL POWER SYSTEMS

3.8.9 Distribution Systems - Operating

The information in this section of the reference ABWR DCD, including all subsections, is incorporated by reference with the following departure.

STD DEP 8.3-1

The ABWR plant medium voltage electrical system design change was provided in ABWR Licensing Topical Report (LTR) NEDO-33335 "Plant Medium Voltage Electrical System Design," Rev. 0, dated May 2007. LTR pages 3.8-42 and 44 are incorporated by reference.

3.8 ELECTRICAL POWER SYSTEMS

3.8.10 Distribution Systems - Shutdown

The information in this section of the reference ABWR DCD, including all subsections, is incorporated by reference with no departures or supplements.

3.8 ELECTRICAL POWER SYSTEMS

3.8.11 AC Sources-Shutdown (Low Water Level)

The information in this section of the reference ABWR DCD, including all subsections and figures, is incorporated by reference with the following departure.

STD DEP 8.3-1

The ABWR plant medium voltage electrical system design change was provided in ABWR Licensing Topical Report (LTR) NEDO-33335 "Plant Medium Voltage Electrical System Design," Rev. 0, dated May 2007. LTR page 3.8-50 is incorporated by reference.

3.9 REFUELING OPERATIONS

3.9.1 Refueling Equipment Interlocks

The information in this section of the reference ABWR DCD, including all subsections, is incorporated by reference with the following departure.

STD DEP 16.3-25

LCO 3.9.1 *The refueling equipment interlocks* associated with the reactor mode switch in the refuel position *shall be OPERABLE.*

APPLICABILITY: *During in-vessel fuel movement with equipment associated with the interlocks* when the reactor mode switch is in the refuel position.

3.9 REFUELING OPERATIONS

3.9.2 Refuel Position Rod-Out Interlock

The information in this section of the reference ABWR DCD, including all subsections, is incorporated by reference with no departures or supplements.

3.9 REFUELING OPERATIONS

3.9.3 Control Rod Position

The information in this section of the reference ABWR DCD, including all subsections, is incorporated by reference with no departures or supplements.

3.9 REFUELING OPERATIONS

3.9.4 Control Rod Position Indication

The information in this section of the reference ABWR DCD, including all subsections, is incorporated by reference with no departures or supplements.

3.9 REFUELING OPERATIONS

3.9.5 Control Rod OPERABILITY

The information in this section of the reference ABWR DCD, including all subsections, is incorporated by reference with the following departure.

STD DEP 16.3-15

SURVEILLANCE REQUIREMENTS

SURVEILLANCE		*FREQUENCY*
SR 3.9.5.1	*Insert each withdrawn control rod at least one step.*	*7 days*
SR 3.9.5.2	*Verify each withdrawn control rod scram accumulator pressure is ≥ ~~10.49~~* 12.75 *MPaG.*	*7 days*

3.9 REFUELING OPERATIONS

3.9.6 Reactor Pressure Vessel (RPV) Water Level

The information in this section of the reference ABWR DCD, including all subsections, is incorporated by reference with no departures or supplements.

3.9 REFUELING OPERATIONS

3.9.7 Residual Heat Removal (RHR)-High Water Level

The information in this section of the reference ABWR DCD, including all subsections, is incorporated by reference with no departures or supplements.

3.9 REFUELING OPERATIONS

3.9.8 Residual Heat Removal (RHR)-Low Water Level

The information in this section of the reference ABWR DCD, including all subsections, is incorporated by reference with no departures or supplements.

3.10 SPECIAL OPERATIONS

3.10.1 Inservice Leak and Hydrostatic Testing Operation

The information in this section of the reference ABWR DCD, including all subsections, is incorporated by reference with no departures or supplements.

3.10 SPECIAL OPERATIONS

3.10.2 Reactor Mode Switch Interlock Testing

The information in this section of the reference ABWR DCD, including all subsections, is incorporated by reference with no departures or supplements.

3.10 SPECIAL OPERATIONS

3.10.3 Control Rod Withdrawal – Hot Shutdown

The information in this section of the reference ABWR DCD, including all subsections, is incorporated by reference with no departures or supplements.

3.10 SPECIAL OPERATIONS

3.10.4 Control Rod Withdrawal-Cold Shutdown

The information in this section of the reference ABWR DCD, including all subsections, is incorporated by reference with the following departure.

STD 16.3-19

LCO 3.10.4 *The reactor mode switch position specified in Table 1.1-1 for MODE 4 may be changed to include the refuel position, and operation considered not to be in MODE 2, to allow withdrawal of a single control rod or control rod pair, and subsequent removal of the associated control rod drives (CRD) if desired, provided the following requirements are met:*

a. All other control rods are fully inserted;

b. 1. LCO 3.9.2, "Refuel Position Rod-Out Interlock," and

LCO 3.9.4, "Control Rod Position Indication,"

OR

2. A control rod withdrawal block is inserted; and

c. 1. LCO 3.3.1.1, "SSLC Sensor Instrumentation," MODE 5 requirements for Functions 1.a, 1.d, 2.a, and 2.d., of Table 3.3.1.1-1,

LCO 3.3.1.2, "RPS and MSIV Trip Actuation," Functions 1.a, 1.b, 3, and 4; and

LCO 3.9.5, "Control Rod OPERABILITY – Refueling,"

OR

2. All other control rods in a five by five array centered on the control rod or control rod pair *being withdrawn are disarmed, and*

LCO 3.1.1, "SHUTDOWN MARGIN (SDM)," MODE 5 requirements, except the single control rod or control rod pair to be withdrawn may be assumed to be the highest worth control rod or control rod pair.

3.10 SPECIAL OPERATIONS (RCS)

3.10.5 Control Rod Drive (CRD) Removal-Refueling

The information in this section of the reference ABWR DCD, including all subsections, is incorporated by reference with the following departures.

STD DEP 16.3-21

STD DEP 16.3-22

LCO 3.10.5 *The requirements of Functions 1.a, 1.b, 1.d, ~~2.a, 2.d~~ and 12 of LCO 3.3.1.1, "SSLC Sensor Instrumentation"; Functions 1.a, 1.b, 3, and 4 of LCO 3.3.1.2, "RPS and MSIV Actuation", LCO 3.3.8.1, "Electric Power Monitoring"; LCO 3.9.1, "Refueling Equipment Interlocks"; LCO 3.9.2, "Refueling Position Rod-Out Interlock"; LCO 3.9.4, "Control Rod Position Indication"; and LCO 3.9.5, "Control Rod OPERABILITY – Refueling," may be suspended in MODE 5 to allow the removal of a single CRD or CRD pair associated with control rod(s) withdrawn from core cell(s) containing one or more fuel assemblies, provided the following requirements are met:*

a. All other control rods are fully inserted;

b. All other control rods in a five by five array centered on the control rod being removed are disarmed;

c. A control rod withdrawal block is inserted;

d. LCO 3.1.1, "SHUTDOWN MARGIN (SDM)," MODE 5 requirements, except the single control rod (or pair) to be withdrawn may be assumed to be the highest worth control rod pair; and

e. No other CORE ALTERATIONS are in progress.

3.10 SPECIAL OPERATIONS (RCS)

3.10.5 Control Rod Drive (CRD) Removal-Refueling

STD DEP 16.3-22

SURVEILLANCE		FREQUENCY
SR 3.10.5.1	*Verify all control~~s~~ rods, other than the control rod(s) withdrawn for the removal of the associated CRD(s), are fully inserted.*	*24 hours*
SR 3.10.5.2	*Verify all control rods, other than the control rod(s) withdrawn for the removal of the associated CRD(s), in a five by five array centered on each control rod withdrawn for the removal of the associated CRD, are disarmed.*	*24 hours*

3.10 SPECIAL OPERATIONS

3.10.6 Multiple Control Rod Withdrawal-Refueling

The information in this section of the reference ABWR DCD, including all subsections, is incorporated by reference with no departures or supplements.

3.10 SPECIAL OPERATIONS

3.10.7 Control Rod Testing-Operating

The information in this section of the reference ABWR DCD, including all subsections, is incorporated by reference with the following departure.

STD DEP 16.3-4

LCO 3.10.7 *The requirements of LCO 3.1.6, "Rod Pattern Control," may be suspended ~~and control rods bypassed in the Rod Action and Position Information (RAPI) Subsystem as allowed by SR 3.3.5.1.7,~~ to allow performance of SDM demonstrations, control rod scram time testing, control rod friction testing, and the Startup Test Program, provided* LCO 3.3.5.1, "Control Rod Block Instrumentation" for Function 1.b of Table 3.3.5.1-1 is met with the approved control rod sequence *or conformance to the approved control rod sequence for the specified test is verified by a second licensed operator or other qualified member of the technical staff.*

SURVEILLANCE REQUIREMENTS

SURVEILLANCE		*FREQUENCY*
SR 3.10.7.1	----------*NOTE*---------- Not required to be met if SR 3.10.7.2 is satisfied. ---------- *Verify movement of control rods is in compliance with the approved control rod sequence for the specified test by a second licensed operator or other qualified member of the technical staff.*	*During control rod movement*
SR 3.10.7.2	----------NOTE---------- Not required to be met if SR 3.10.7.1 is satisfied. ---------- Perform the applicable SRs for LCO 3.3.5.1 Function 1.b.	According to the applicable SRs

3.10 SPECIAL OPERATIONS

3.10.8 SHUTDOWN MARGIN (SDM) Test-Refueling

The information in this section of the reference ABWR DCD, including all subsections, is incorporated by reference with no departures or supplements.

3.10 SPECIAL OPERATIONS

3.10.9 Reactor Internal Pumps (RIPs)-Testing

The information in this section of the reference ABWR DCD, including all subsections, is incorporated by reference with no departures or supplements.

3.10 SPECIAL OPERATIONS

3.10.10 Training Startups

The information in this section of the reference ABWR DCD, including all subsections, is incorporated by reference with no departures or supplements.

3.10 SPECIAL OPERATIONS

3.10.11 Low Power PHYSICS TEST

The information in this section of the reference ABWR DCD, including all subsections, is incorporated by reference with no departures or supplements.

3.10 SPECIAL OPERATIONS

3.10.12 Multiple Control Rod Drive Subassembly Removal-Refueling

The information in this section of the reference ABWR DCD, including all subsections, is incorporated by reference with the following departure.

STD DEP 16.3-17

LCO 3.10.12 *The requirements of LCO 3.9.3, "Control Rod Position"; LCO 3.9.4, "Control Rod Position Indication"; and LCO 3.9.5, "Control Rod OPERABILITY – Refueling," may be suspended, and the "full in" position indicators may be bypassed for any number of control rods in MODE 5, to allow removal of control rod drive subassemblies with the control rods maintained fully inserted by their* applicable *anti-rotation devices, provided the following requirements are met:*

SURVEILLANCE REQUIREMENTS

SURVEILLANCE		*FREQUENCY*
SR 3.10.12.1	*Verify the* applicable *anti-rotation devices associated with each CRD subassembly* ~~*removed*~~ removal *are in the correct position to maintain the control rod fully inserted.*	*24 hours*

B 3.0 LIMITING CONDITION FOR OPERATION (LCO) AND SURVEILLANCE REQUIREMENTS (SRs)

The information in this section of the reference ABWR DCD, including all subsections, is incorporated by reference with the following departures and site-specific supplements. The site-specific supplements partially address COL License Information Item 16.1.

STD DEP 16.3-1

STD DEP 16.3-2

LCO 3.0.6

STD DEP 16.3-1

Specification ~~5.8~~5.6, "Safety Function Determination Program" (SFDP), ensures loss of safety function is detected and appropriate actions are taken. Upon failure to meet two or more LCOs concurrently, an evaluation shall be made to determine if loss of safety function exists. Additionally, other limitations, remedial actions, or compensatory actions may be identified as a result of the support system inoperability and corresponding exception to entering supported system Conditions and Required Actions. The SFDP implements the requirements of LCO 3.0.6.

B 3.0 LIMITING CONDITION FOR OPERATION (LCO) AND SURVEILLANCE REQUIREMENTS (SRs)

SR 3.0.1

STD DEP 16.3-2

Upon completion of maintenance, appropriate post maintenance testing is required to declare equipment OPERABLE. This includes ensuring applicable Surveillances are not failed and their most recent performance is in accordance with SR 3.0.2. Post maintenance testing may not be possible in the current MODE or other specified conditions in the Applicability due to the necessary unit parameters not having been established. In these situations, the equipment may be considered OPERABLE provided testing has been satisfactorily completed to the extent possible and the equipment is not otherwise believed to be incapable of performing its function. This will allow operation to proceed to a MODE or other specified condition where other necessary post maintenance tests can be completed. Some examples of this process are:

a. *Control rod drive maintenance during refueling that requires scram testing at >* ~~[5.51~~ 6.55 MPaG.~~]~~ *However, if other appropriate testing is satisfactorily completed and the scram time testing of SR 3.1.~~3.4~~*4.3 *is satisfied, the control rod can be considered OPERABLE. This allows startup to proceed to reach ~~[5.51~~* 6.55 *MPaG~~]~~ to perform other necessary testing.*

b. ~~*High pressure core flooder (HPCF)*~~ Reactor core isolation cooling (RCIC) *maintenance during shutdown that requires system functional tests at a specified pressure. Provided other appropriate testing is satisfactorily completed, startup can proceed with ~~HPCF~~* RCIC *considered OPERABLE. This allows operation to reach the specified pressure to complete the necessary post maintenance testing.*

B 3.1 REACTIVITY CONTROL SYSTEMS

B 3.1.1 SHUTDOWN MARGIN (SDM)

BASES

The information in this section of the reference ABWR DCD, including all subsections, is incorporated by reference with the following departure.

STD DEP 16.3-4

SURVEILLANCE REQUIREMENTS *SR 3.1.1.1*

The SDM may be demonstrated during an in sequence control rod pair withdrawal, in which the highest worth control rod pair is analytically determined, or during local criticals, where the highest worth control rod pair is determined by testing. Local critical tests require the withdrawal of out of sequence control rods. ~~This testing would therefore require bypassing of the Rod Worth Minimizer to allow the out of sequence withdrawal, and therefore additional requirements must be met (see LCO 3.10.7, "Control Rod Testing – Operating").~~ This testing is performed in accordance with LCO 3.10.7, "Control Rod Testing - Operating" or LCO 3.10.8, "SDM Test - Refueling" where additional requirements are required to be met.

B 3.1 REACTIVITY CONTROL SYSTEMS

B 3.1.2 Reactivity Anomalies

BASES

The information in this section of the reference ABWR DCD, including all subsections, is incorporated by reference with the following departure.

STD DEP 16.3-89

APPLICABLE SAFETY ANALYSES

Accurate prediction of core reactivity is either an explicit or implicit assumption in the accident analysis evaluations. Every accident evaluation (Ref. 2) is, therefore, dependent upon accurate evaluation of core reactivity. In particular, SDM and reactivity transients, such as control rod withdrawal events ~~or rod drop accidents~~, are very sensitive to accurate prediction of core reactivity. These accident analysis evaluations rely on computer codes that have been qualified against available test data, operating plant data, and analytical benchmarks. Monitoring reactivity anomaly provides additional assurance that the nuclear methods provide an accurate representation of the core reactivity.

B 3.1 REACTIVITY CONTROL SYSTEMS

B 3.1.3 Control Rod OPERABILITY

BASES

The information in this section of the reference ABWR DCD, including all subsections, is incorporated by reference with the following departures.

STD DEP 16.3-90

STD DEP 16.3-68

STD DEP 16.3-90

BACKGROUND

This Specification, along with LCO 3.1.4, "Control Rod Scram Times," and LCO 3.1.5, "Control Rod Scram Accumulators," ensure that the performance of the control rods in the event of a Design Basis Accident (DBA) or transient meets the assumptions used in the safety analyses of References~~.~~ 2, 3, and *4~~, and 5~~.*

STD DEP 16.3-90

APPLICABLE SAFETY ANALYSES

The analytical methods and assumptions used in the evaluations involving control rods are presented in References 2, 3, and *4~~, and 5~~.*
The control rods provide the primary means for rapid reactivity control (reactor scram), for maintaining the reactor subcritical, and for limiting potential effects of reactivity insertion events caused by malfunctions in the CRD System.

STD DEP 16.3-68

ACTIONS

A.1, A.2, and A.3

A control rod is considered stuck if it will not insert by either FMCRD drive motor torque or scram pressure. The failure of a control rod to insert during SR 3.1.3.2 or SR 3.1.3.3 alone, however, does not necessarily mean that the control rod is stuck, since failure of the motor drive would also result in a failure of these tests. Verification of a stuck rod can be made by attempting to withdraw the rod. If the motor is working and the rod is actually stuck, the traveling nut will back down from the bottom of the drive and a rod separation alarm and rod block will result ~~(see LCO 3.3.5.1)~~. Conversely, if the motor drive is known to be failed, the rod is not necessarily inoperable since it is probably still capable of scram. However, at the next required performance of SR 3.1.3.2 or 3.1.3.3, there would be no way of verifying insertability, except by scram. In this case, an individual scram should be attempted. If the rod scrams, the rod is not stuck but should be considered inoperable and bypassed in RCIS since it cannot be withdrawn and a separation situation will exist until the motor is repaired and the traveling nut is run-in to the full in position. If the rod fails to insert by individual scram, it should be considered stuck and the appropriate ACTIONS

BASES

taken. The failure of a control rod pair to insert is assumed in the design basis transient and accident analyses and therefore, with one withdrawn control rod stuck, some time is allowed to make the control rod insertable.

STD DEP 16.3-90

REFERENCES

1. *10 CFR 50, Appendix A, GDC 26, GDC 27, GDC 28, and GDC 29.*

2. *DCD Tier 2, Section 4.6.2.*

3. *DCD Tier 2, Section 5.2.2.*

4. *DCD Tier 2, Section 15.4.1.*

5. ~~*DCD Tier 2, Section 15.4.9.*~~ Not used

6. *NEDO-21231, "Banked Position Withdrawal Sequence," Section 7.2, January 1977.*

B 3.1 REACTIVITY CONTROL SYSTEMS

B 3.1.4 Control Rod Scram Times

BASES

The information in this section of the reference ABWR DCD, including all subsections, is incorporated by reference with no departures or supplements.

B 3.1 REACTIVITY CONTROL SYSTEMS

B 3.1.5 Control Rod Scram Accumulators

BASES

The information in this section of the reference ABWR DCD, including all subsections, is incorporated by reference with no departures or supplements.

B 3.1 REACTIVITY CONTROL SYSTEMS

B 3.1.6 Rod Pattern Control

BASES

The information in this section of the reference ABWR DCD, including all subsections, is incorporated by reference with no departures or supplements.

B 3.1 *REACTIVITY CONTROL SYSTEMS*

B 3.1.7 Standby Liquid Control (SLC) SYSTEM

The information in this section of the reference ABWR DCD, including all subsections, is incorporated by reference with the following departure.

STD DEP 16.3-3

LCO *The OPERABILITY of the SLC System provides backup capability for reactivity control, independent of normal reactivity control provisions provided by the control rods. The OPERABILITY of the SLC System is based on the conditions of the borated solution in the storage tank and the availability of a flow path to the RPV, including the OPERABILITY of the pumps and valves.* ~~*Because the minimum required boron solution concentration is the same for both ATWS mitigation and cold shutdown (unlike some previous reactor designs) then if the boron solution concentration is less than the required limit, both SLC subsystems shall be declared inoperable.*~~ *Two SLC subsystems are required to be OPERABLE, each containing an OPERABLE pump, a motor operated injection valve, and associated piping, valves, and instruments and controls to ensure an OPERABLE flow path.*

B 3.2 POWER DISTRIBUTION LIMITS

B 3.2.1 AVERAGE PLANAR LINEAR HEAT GENERATION RATE (APLHGR)

BASES

The information in this section of the reference ABWR DCD, including all subsections, is incorporated by reference with no departures or supplements.

B 3.2 POWER DISTRIBUTION LIMITS

B 3.2.2 MINIMUM CRITICAL POWER RATIO (MCPR)

BASES

The information in this section of the reference ABWR DCD, including all subsections, is incorporated by reference with no departures or supplements.

B 3.2 POWER DISTRIBUTION LIMITS

B 3.2.3 LINEAR HEAT GENERATION RATE (LHGR) (Non-GE Fuel)

BASES

The information in this section of the reference ABWR DCD, including all subsections, is incorporated by reference with no departures or supplements.

B 3.3 INSTRUMENTATION

B 3.3.1.1 Safety System Logic Control (SSLC) Sensor Instrumentation

BASES

The information in this section of the reference ABWR DCD, including all subsections, is incorporated by reference with the following departures.
STD DEP T1 2.2-1
STD DEP T1 2.3-1
STD DEP T1 2.4-2
STD DEP T1 2.4-3
STD DEP T1 3.4-1
STD DEP 4.4-1
STD DEP 7.3-3
STD DEP 8.3-1
STD DEP 16.3-53
STD DEP 16.3-85
STD DEP 16.3-91
STD DEP 16.3-92
STD DEP 16.3-93

STD DEP 4.4-1
The plant stability evaluation was provided in ABWR Licensing Topical Report NEDO-33336, Advanced Boiling Water Reactor (ABWR) Stability Evaluation, June 2007. Pages C-11 through C15 are incorporated by reference.

STD DEP 8.3-1
The plant medium voltage electrical system alternate design description was provided in ABWR Licensing Topical Report NEDO-33335, Advanced Boiling Water Reactor (ABWR) Plant Medium Voltage Electrical System Design, May 2007. LTR page B 3.3-17 is incorporated by reference.

STD DEP T1 3.4-1
BACKGROUND *The SSLC is comprised of four independent logic divisions (Div. I, II, III, IV). Each logic division provides protective action initiation signals for safety system prime movers associated with their division. Each division is a collection of SENSOR CHANNELS which provide data to the LOGIC CHANNELS in the division. The LOGIC CHANNELS provide initiation signals to the appropriate OUTPUT CHANNELS. The OUTPUT CHANNELS cause actuation of the equipment that implements protective actions. The Functions listed in Table 3.3.1.1-1 have at least one SENSOR CHANNEL in one or more divisions.*

SSLC is implemented through the Reactor Trip and Isolation System (RTIS), which supports the reactor protection and main steam isolation functions, and the ESF Logic and Control System (ELCS), which supports the accident mitigation functions. Also included in the SSLC are the Neutron Monitoring System (NMS), the Containment Monitoring System (CMS), and the safety-related

portions of the radiation monitoring systems. *Each SSLC division has five main components:*

- *Digital Trip ~~Module~~* Unit *(~~DTM~~* DTU*). The digital trip ~~module~~* unit *function is* implemented in *~~a~~ microprocessor based device*s *that acquire~~s~~ data for most process parameters to be monitored in its division and generate~~s~~ a protective action initiation signal within its division if the monitored parameter is outside of specified limits. The protective action initiation signal is also transmitted to other divisions associated with the monitored parameter. Most of the parameters are transmitted to the ~~DTM~~* DTU *via the Essential ~~Multiplexing System (EMS)Data~~* Communication Function (ECF) *in its division while some are received from sub-systems or devices associated with the same division as the ~~DTM~~* DTU*. There are ~~three~~* multiple *~~DTMs~~* DTUs *in each division. ~~One~~* Some *~~DTM~~* DTUs *serve the Reactor Protection System and MSIV closure functions while the others serve the ESF and non-MSIV isolation functions. For the discussions in this LCO the ~~DTMs~~* DTUs *that implement the RPS and MSIV closure functions are referred to as the "RPS/MSIV ~~DTMs~~* DTUs*" and the ones that implement the ESF and non-MSIV closure functions are referred to as the "ESF ~~DTMs~~* DTUs*".*

- *Trip Logic Unit (TLU). The TLU is ~~a~~* implemented in *microprocessor based device*s *that use~~s~~ the parameter trip information from the RPS/MSIV ~~DTMs~~* DTUs *in all four divisions to determine if a protective action is required. There is a TLU in each division. The combinatorial logic used to create protective system actuation commands is performed in the TLU. Some data used for initiating protective actions are connected directly to the TLUs.*

- Digital Logic Controller (DLC) performing the *Safety System Logic ~~Unit (SLU)~~* Function of the ELCS. *The ~~SLU~~* DLC of the ELCS *is ~~a~~* implemented in *microprocessor based device*s *that use~~s~~ the parameter trip information from the ESF ~~DTMs~~* DTUs *in all four divisions to determine if a protective action is required. The combinatorial logic used to create protective system actuation commands is performed in the ~~SLU~~* DLC. ESF logic processing is implemented with either a single channel within each division, redundant channels within each division with two microprocessor channels (i.e., both channels must be initiated for complete actuation of the function), or dual channels within each division with a two-out-of-two vote at the outputs of the DLC, and may be bypassable. ~~*The potential for spurious actuation due to failure of an SLU is greatly reduced by employing two SLUs in parallel with a two-out-of-two output confirmation required before component or system actuation is permitted. Some data used for initiating protective actions are connected directly to the SLUs. There are two sets of dual redundant SLUs in each of three divisions (DIV I, II, & III).*~~

- *Bypass Unit (BPU). The BPU provides the bypass and bypass interlock functions. ~~A BPU in each division provides bypass signals to the TLU, SLU~~*

~~and OLU in its division.~~ *The bypass unit contains logic to enforce restrictions on bypassing multiple divisions of related Functions.*

Most of the parameters are analog signals that are digitized by the remote digital logic controllers (RDLCs) ~~*EMS*~~*. Each division has* ~~*one dual-redundant EMS*~~ an ECF *that transmits data to the* ~~*DTMs*~~ DTUs *in the same division. The* ~~*DTM*~~ DTU *processing logic compares this data against numeric trip setpoints to determine if a protective action is required.*

Typically, a process sensor in each of the four divisions provides a signal ~~*to*~~ via *the* ~~*EMS*~~ ECF ~~*and*~~ to the ~~*DTMs*~~ DTUs *in its division. Exceptions are:*

- *Some parameters are received by the* ~~*DTM*~~ DTU *as discrete (i.e. 2 state) actuation data signals directly from other systems or devices (e.g. MSIV closure signals, PRRM system).*

- *Some parameters are received by the* ~~*DTM*~~ DTU *as analog signals directly from process sensors* ~~*(e.g. Turbine 1st stage pressure)*~~*.*

- *Some parameters are received directly by the* ~~*SLU*~~ ESF DLC *or* the RTIS *TLU as discrete (i.e. 2 state) actuation data signals directly from other systems (e.g. NMS signals, CUW, ECCS, manual initiation signals). These parameters are covered by other LCOs, except the NMS parameters are covered by this LCO.*

- *Some parameters are received by the* ~~*SLU*~~ ESF DLC *as analog signals directly from process sensors (e.g. RHR pump discharge pressure). These parameters are covered by other LCOs.*

- *Some parameters (e.g. SLCS and FWRB initiation on Reactor Vessel Water Level-Low, Level 2) are connected to signal processing electronics that are separate from the normal SSLC processor.* ~~*An Analog Trip Module (ATM) and logic card*~~ A separate I/O unit *is provided in each division for these parameters.*

The SSLC hardware and logic is arranged so the system uses two-out-of four coincident initiation logic (i.e. 2 signals for the same parameter must exceed the setpoint before a protective action initiation command is issued). The interdivisional initiation data used in the ~~*SLU/TLU*~~ ESF DLC / RTIS TLU *logic is transmitted between divisions by isolated fiber optic links from the* ~~*DTMs*~~ DTUs *or other systems in the redundant divisions.*

There are two basic segments that are used to initiate protective actions. The SENSOR CHANNEL segment consists of the instrumentation portion, which encompasses the sensors, sensor data conversion, sensor data transmission path (i.e. ~~*EMS*~~ ECF*), the mechanisms responsible for acquiring data from the* ~~*EMS*~~ ECF*, and the setpoint comparison. Capability is provided to manually trip*

individual SENSOR CHANNELS. Interlocks are provided to prevent placing more than one SENSOR CHANNEL for a given Function in trip at the same time.

The SENSOR CHANNELS and LOGIC CHANNELS are replicated in four independent and separated divisions of equipment. The sensors and ~~EMS~~ ECF *are not considered to be part of the SSLC. However, the sensors and the analog to digital conversion portion of the ~~EMS~~* ECF *are addressed by this LCO since these devices can effect the results of surveillances required by this LCO.*

Various bypasses are provided to permit on-line maintenance and calibration. The "division of sensors bypass" disables the ~~DTM~~ DTU *inputs to the associated ~~SLU~~* ESF DLC *and* RTIS *TLU in one division. The direct trip inputs to the ~~SLU~~* ESF DLC *and* RTIS *TLU are not bypassed. Interlocks are provided so only one division of sensors at a time can be placed in bypass. When a division of sensors is bypassed the sensor trip logic in all ~~SLUs~~* ESF DLCs *and* RTIS *TLUs becomes 2 out of 3 and all of them are capable of providing signals to equipment used to provide protective action. Other bypasses are used to manually or automatically disable selected Functions when they are not required.*

The RPS/MSIV OUTPUT CHANNEL may be bypassed with the TLU logic output bypass which disables the trip input to the ~~SLU~~ OLU *in one logic division. Interlocks are provided so only one division at a time can be placed in TLU logic output bypass. When a logic division is bypassed the final actuation logic becomes 2/3 for the scram and MSIV closure actions. The sensor trip logic within the unbypassed logic divisions remains as 2/4.*

~~*If one of the redundant SLUs in a division is inoperable it can be bypassed at the associated OUTPUT CHANNELS, which changes the actuation logic to one-out-of-one in the associated division.*~~ Some ESF logic processing may be bypassed for a redundant channel, which disables the trip output to the OLU altering the logic format from 2/2 to 1/1 for that ESF action. The equipment involved with each of these systems is described in the Bases for LCO 3.3.1.4, "ESF Actuation Instrumentation."

The NMS contains a separate *bypass which causes one of the NMS APRM* sensor *divisions to be bypassed in the NMS logic. The trip logic ~~in~~* for NMS APRM sensor inputs *~~all four NMS APRM divisions~~ then becomes 2/3 ~~and all divisions will send a trip signal to~~* in *all four SSLC divisions ~~when appropriate~~. ~~This bypass is therefore transparent to the SSLC.~~ Interlocks are provided so only one NMS APRM division* at a time *can be placed in bypass.*

The SSLC includes a variety of self-test and monitoring features. The self-test in each microprocessor based device checks the health of the microprocessor, RAM, ROM, communications, and software. Any detected failure that could degrade protective action initiation activates an annunciator and provides fault indication to the board level. Transient failures (e.g. data transmission bit error) are logged to provide maintenance information. Monitoring of the power supplies, card out of file interlocks, and memory batteries (if used) causes an

BASES

INOP/TRIP in addition to activating an annunciator. ~~If the self test detects a failure in one of the redundant SLUs within a division, the failed SLU is automatically bypassed (initiation logic becomes one-out-of-one) and an alarm is generated.~~

Signal validity tests are performed on the data received from the ~~EMS~~ ECF. *If a permanent error is detected on a particular parameter the logic state for that parameter will default to a tripped state for the signal and an annunciator or alarm will be activated. Soft (i.e., transient) errors will be logged to provide maintenance information.*

Reactor Protection System (RPS)

The RPS, as shown in Reference 3, uses four independent divisions each containing sensors, the ~~EMS~~ ECF, *~~the SSLC~~ DTUs, TLUs, OLUs, load drivers, and switches that are necessary to cause initiation of a reactor scram. Functional diversity is provided by monitoring a wide range of dependent and independent parameters. The input parameters to the SSLC scram logic are from devices that monitor:*

STD DEP T1 2.3-1

~~- main steam tunnel radiation~~

STD DEP T1 3.4-1

Two hardwired manual scram switches which completely bypass the ~~EMS~~ ECF, *~~SSLC~~*RTIS, *and load drivers are provided. The switches on the main control console remove power from the scram pilot valve solenoids and also energize the air header dump valve solenoids (backup scram). When the reactor mode switch is in the SHUTDOWN position, manual scram is also initiated. The manual scram functions are covered in LCO 3.3.1.2.*

STD DEP T1 2.4-3

Reactor Core Isolation Cooling System (RCIC)

The RCIC system is initiated automatically when either high drywell pressure or low reactor vessel water Level 2 is detected and produces the design flow rate within a specified time. The system then functions to provide makeup water to the reactor vessel until the reactor vessel water level is restored. RCIC flow will shut down automatically when Reactor Water Level - High, Level 8 is detected. In addition, turbine overspeed ~~and high exhaust pressure equipment~~ protection signals will trip the turbine. The RCIC system is also shut down by the isolation feature described in the isolation section of this LCO.

STD DEP T1 3.4-1

High Pressure Core Flooder System (HPCF)

The HPCF is provided with system level and device level manual controls which permit operator control of the systems. The manual controls for HPCF C diverse logic *system initiation are hardwired and completely bypass the ~~EMS~~* ECF *and SSLC.*

BASES

STD DEP 16.3-85

Automatic Depressurization System (ADS)

The motive power for ~~the~~ opening the ADS valves is from local accumulators supplied by the high pressure nitrogen supply systems (Division I and II). The ADS accumulators have sufficient capacity to operate the safety relief valve ~~twice with the drywell at 70% of design pressure~~ one time at drywell design pressure or five times at normal drywell pressure *with no external source of nitrogen.*

STD DEP T1 3.4-1

Two ADS subsystems, ADS 1 and ADS 2 are provided. ADS 1 is controlled by a division I ~~SLU~~ DLC *Pair and ADS 2 is controlled by a division II ~~SLU~~* DLC *Pair. Each ADS division controls one of the two separate solenoid operated pilot valves on each Safety/Relief Valve (SRV) assigned to the ADS. Energizing either pilot valve causes the SRV to open.*

The reactor vessel low water Level 1 for ADS is sourced from ~~8~~ 4 *level transmitters. ~~One set of four is used by the ADS 1 logic and the other set is used by the ADS 2 logic.~~ The low water Level 1.5 ATWS ADS inhibit signal is sourced from 4 level transmitters that are different from the Level 1 transmitters.*

ISOLATION

The isolation instrumentation includes the sensors, the ~~EMS~~ ECF*, the ~~SSLC~~* ELCS*, load drivers, and switches that are necessary to cause closure of the valves provided to close off flow paths that could result in unacceptable fission product release. Functional diversity is provided by monitoring a wide range of independent parameters. The input data to the isolation logic originates in devices that monitor local parameters (e.g. high temperatures, high radiation, high flows) as well as primary system and containment system parameters that are indicative of a leak.*

STD DEP T1 2.3-1

1. Main Steam Line Isolation

The Functions used to initiate MSIV closure are:

~~- Main Steam Tunnel Radiation - High~~

STD DEP T1 3.4-1

2. Containment Isolation

Containment isolation closes valves (except MSIVs) and dampers in effluent pipes and ducts that penetrate the primary and/or secondary containment to prevent fission product release and initiates the standby gas treatment system (SGTS) to remove fission products from the secondary containment atmosphere. Isolation initiation is performed in the division I, II and III ESF ~~SLUs~~ DLCs*. The Functions used for containment isolation initiation are:*

- Drywell Sump Drain Low Conductivity Water (LCW) Radiation - High

(Note: Single signal from PRRM system to division I ~~SLU~~ DLC only. This signal is covered by LCO 3.3.1.4, "ESF Actuation Instrumentation".)

- *Drywell Sump Drain High Conductivity Water (HCW) Radiation - High. (Note: Single signal from PRRM system to division I ~~SLU~~ DLC only. This signal is covered by LCO 3.3.1.4, "ESF Actuation Instrumentation".)*
- *Reactor Building Area/Fuel Handling Area Exhaust Air Radiation - High. (Note: Signal received directly from PRRM discrete outputs to the ~~DTMs~~ DTUs.)*

3. Reactor Core Isolation Cooling (RCIC) System Isolation

The RCIC isolation protects against breaks in the steam supply line to the RCIC turbine. RCIC isolation trip calculations are performed in the ~~DTMs~~ DTUs in all four ESF divisions. Isolation initiation for the inboard isolation valve is performed in the division I ESF ~~SLU~~ DLC ~~pairs~~ and for the outboard isolation valves in the division II ESF ~~SLU~~ DLC ~~pairs~~. The Functions used for RCIC isolation initiation are:

STD DEP T1 2.4-3

~~- RCIC Steam Supply Line Pressure - Low~~
~~- RCIC Turbine Exhaust Diaphragm Pressure - High. (This Function is addressed in LCO 3.3.1.4, "ESF Actuation Instrumentation".)~~

STD DEP T1 3.4-1

4. Reactor Water Cleanup System Isolation

This isolation protects against breaks in lines carrying CleanUp Water (CUW) and also serves to align CUW valves so they do not interfere with ECCS injection. Isolation initiation for the inboard isolation valve is performed in the division ~~II~~ I ESF ~~SLU pair~~ DLC and for the outboard isolation valves in the division ~~I~~ II ESF ~~SLU pair~~ DLC. The Functions used for CUW line isolation/ECCS lineup initiation are:

- *Reactor Vessel Steam Dome Pressure - High. (This Function is used only in division I ~~SLU~~ DLC actuation logic to close the head spray valve.)*

5. Shutdown Cooling System Isolation

This isolation protects against breaks in lines used in the shutdown cooling mode of the RHR and also serves to align RHR valves so they do not interfere with ECCS injection. Isolation/injection lineup initiation for the RHR loops are performed in the ESF ~~SLUs~~ DLCs as follows:

STD DEP T1 2.4-2

OTHER ESF FUNCTIONS

7. Feedwater Line Break Mitigation. The trip of condensate pumps is initiated upon detection of concurrent high drywell pressure and high feedwater differential pressure.

BASES

STD DEP T1 3.4-1

ATWS MITIGATION

The Standby Liquid Control System (SLCS) initiation and Feedwater Runback (FWRB) ATWS mitigation features are performed by SSLC circuitry diverse to and independent of the microprocessor-based devices of the primary protective system functions. These Features are initiated by Reactor Vessel Steam Dome Pressure - High or Reactor Water Level Low, Level 2 Functions when the SRNM ATWS permissive is active. The initiation signals are provided by ~~Analog Trip Modules (ATM)~~ separate I/O units *that are located in the SSLC cabinets.*

There is a~~n ATM~~ separate I/O unit *in each division for each of the functions. The ~~ATMs~~* separate I/O units *are connected directly to the sensors in the division associated with the ~~ATM~~* I/O unit*. The outputs of all four ~~ATMs~~* I/O units *are connected to four logic units (one in each division) using suitable isolation.*

APPLICABLE SAFETY ANALYSIS, LCO and APPLICABILITY

This LCO covers all Functions that use connections to the ~~DTMs~~ DTUs *and the NMS Functions. Functions, other than NMS, that are connected to the ~~SLUs~~ ESF* DLCs *or* RTIS *TLUs are covered in the system actuation LCOs.*

1.a & b. Startup Range Neutron Monitor (SRNM) Neutron Flux - High/Short Period

*For each division, a high flux, short period, or INOP trip from any one SRNM channel will result in a trip signal from that division. The SRNM trip data is transmitted to the TLUs in the ~~SSLC~~*RTIS*. The division of sensor bypass in the RPS portion of the ~~SSLC~~*RTIS *does not bypass the SRNM trip signal input.*

2.b. Average Power Range Monitor Simulated Thermal Power - High, Flow Biased

Each APRM division receives a total recirculation flow data value from the ~~EMS~~ ECF*. The flow is measured using 4 independent flow transmitters that monitor the core plate pressure drop.*

2.e. Rapid Core Flow Decrease

The scram signal from this function is sent to the RPS TLUs over the same data transmission path as the APRM trips. The APRM System is divided into four divisions. Each APRM division sends a trip signal to all four RPS TLUs via suitable isolators. The rate of flow decrease is calculated from total recirculation flow data acquired from the ~~EMS~~ ECF*. The flow is measured using 4 independent flow transmitters that monitor the core plate pressure drop.*

3.a., b. & c. Reactor Vessel Steam Dome Pressure – High

Each ~~DTM~~ DTU *receives a data value representing measured reactor pressure from the ~~EMS~~* ECF *in its division and compares the value against a numeric setpoint to determine if a trip is required for Functions 3.a and 3.b. Each ~~ATM~~ I/O unit receives a~~n analog~~* separate *signal directly from the process sensors for Function 3.c. The ~~ATM~~* I/O *unit compares the signal with a setpoint to generate the ATWS mitigation Feature initiation signal.*

Reactor pressure is measured using four independent (separate vessel taps, instrument piping, etc) pressure transmitters connected to the RPV steam space. The four sensors are connected to both the ~~RMU~~ RDLC *and ~~ATM~~* I/O unit *in the same division. The Reactor Vessel Steam Dome Pressure - High Allowable Value is chosen to provide a sufficient margin to the ASME Section III Code limits during pressurization events.*

4. Reactor Vessel Steam Dome - Low (Injection Permissive)

Each ESF ~~DTM~~ DTU *receives a data value representing measured reactor pressure from the ~~EMS~~* ECF *in its division and compares the value against a numeric setpoint to determine if a trip is required.*

5. Reactor Vessel Water Level -High, Level 8

Each ESF ~~DTM~~ DTU *receives a data value representing measured reactor vessel water level from the ~~EMS~~* ECF *in its division and compares it against a numeric setpoint to determine if a Level 8 trip is required.*

6.a. & b. Reactor Vessel Water Level - Low, Level 3

Each ~~DTM~~ DTU *receives a data value representing measured reactor vessel level from the ~~EMS~~* ECF *in its division and compares it against a numeric setpoint to determine if a Level 3 trip is required.*

7.a., b. & c. Reactor Vessel Water Level - Low, Level 2

Each ESF ~~DTM~~ DTU *receives a data value representing measured reactor vessel water level from the ~~EMS~~* ECF *in its division and compares it against a numeric setpoint to determine if a Level 2 trip is required for Functions 7.a and 7.b. Each ~~ATM~~* I/O unit *receives a~~n analog~~* separate *signal directly from the process sensors for Function 7.c. The ~~ATM~~* I/O unit *compares the signal with a setpoint to generate the ATWS mitigation Feature initiation signal.*

The reactor water level signals originate in four independent (separate vessel taps, instrument piping, etc.) level transmitters that sense the pressure difference between a constant column of water (reference leg) and the effective water column (variable leg) in the vessel. The four sensors are connected to both the ~~ATM~~ I/O unit *and ~~RMU~~* RDLC *in the same division.*

BASES

8.a., b. & c. Reactor Vessel Water Level - Low, Level 1.5

Each ~~DTM~~ DTU *receives a data value representing measured reactor vessel water level from the ~~EMS~~* ECF *in its division and compares it against a numeric setpoint to determine if a Level 1.5 trip is required.*

STD DEP 7.3-3
STD DEP T1 3.4-1

9.a., b. & c. Reactor Vessel Water Level-Low, Level 1

Each ESF ~~DTM~~ DTU *receives ~~two~~* a *data value~~s from independent transmitters~~ representing measured reactor vessel water level from the ~~EMS~~* ECF *in its division and compares ~~them separately~~* it *against a numeric setpoint to determine if a Level 1 trip is required. The reactor water level signals originate in ~~eight~~* four *level transmitters that sense the pressure difference between a constant column of water (reference leg) and the effective water column (variable leg) in the vessel. ~~Data values from four independent transmitters (separate vessel taps, instrument piping, etc.) are used for initiating ADS A, LPFL A & C, CAMS A (9.a), and for the isolation logic (9.c). Four additional transmitters are used to provide data values for initiating the Diesel Generators, the Reactor Building Cooling Water, ADS B, CAMS B and LPFL B (9.b).~~*

10. Main Steam Isolation Valve - Closure

Each RPS/MSIV ~~DTM~~ DTU directly receives (i.e., not via the ~~EMS~~ ECF*) valve closure data from both the outboard and inboard MSIVs on a single steamline.*

STD DEP T1 2.4-2

~~11.a., b., & c.~~ 11.a., b., c., & d. *Drywell Pressure - High*

High pressure in the drywell could indicate a Reactor Coolant Pressure Boundary (RCPB) break or a Feedwater Line Break inside the drywell.

- *ESF Initiation (11.b). Various ESF features that are initiated on this Function are SGTS, CAMS, RCW and RSW.*

- Feedwater Line Break Mitigation Initiation (11.d). The feedwater line break mitigation feature is initiated on this function concurrent with a feedwater line break differential pressure – high (Function 15).

STD DEP T1 3.4-1

Each ~~DTM~~ DTU *(both the RPS/MSIV and ESF ~~DTM~~* DTUs*) receives a data value representing measured drywell pressure from the ~~EMS~~* ECF *in its division and compares it against a numeric setpoint to determine if a trip is required.*

BASES

ESF, ~~*and*~~ *isolation,* and feedwater line break mitigation *initiation (Functions 11.b*, ~~*and*~~ *11.c*, and 11.d*) are required in MODES 1, 2, and 3 where considerable energy exists in the RCS, resulting in the limiting transients and accidents.*

12. CRD Water Header Charging Pressure - Low

Each RPS/MSIV ~~*DTM*~~ DTU *receives a measured CRD charging header pressure value from its associated* ~~*EMS*~~ ECF *and compares it against a numeric setpoint to determine if a trip is required.*

13. Turbine Stop Valve - Closure

Turbine Stop Valve - Closure signals are initiated by a position switch on each of the four stop valves. Each position switch sends a discrete signal directly to one of the four RPS/MSIV ~~*DTM*~~ DTUs *(i.e. does not come via the* ~~*EMS*~~ ECF*). The logic for the Turbine Stop Valve - Closure Function is such that a trip will occur when closure of two or more TSVs is detected.*

STD DEP T1 2.2-1

This Function must be enabled at THERMAL POWER ≥ 40% RTP. ~~*This is normally accomplished automatically using the data from four independent pressure transmitters sensing turbine first stage pressure. Turbine first stage pressure data is received in each RPS DTM via the EMS.*~~ The Turbine Stop Valve – Closure Function is automatically bypassed when thermal power is less than the specified condition of applicability. The thermal power value calculated for the Average Power Range Monitor Simulated Thermal Power-High, Flow Biased Function is used to implement the bypass.

STD DEP T1 3.4-1

14. Turbine Control Valve Fast Closure, Trip Oil Pressure - Low

Turbine Control Valve Fast Closure, Trip Oil Pressure - Low signals are initiated from a pressure sensor on each of the four turbine control valve hydraulic mechanisms. The pressure sensor data associated with each control valve is transmitted directly to one of the four RPS/MSIV ~~*DTM*~~ DTUs *(i.e., are not transmitted via the* ~~*EMS*~~ ECF*). This Function must be enabled at THERMAL POWER ≥ 40% RTP as described for the Turbine Stop Valve - Closure Function.*

STD DEP T1 2.3-1

~~*15.a. & b. Main Steam Tunnel Radiation-High*~~

~~*High radiation in the steam line tunnel indicates a potential gross fuel failure. The MSIVs are therefore closed when high steam tunnel radiation (15.b) is detected to prevent possible violation of the offsite release limits. The MSIV closure causes a loss of the normal heat sink which results in reactor pressure, neutron flux, and heat flux transients that must be limited. Therefore, a reactor scram (15.a) is also initiated on high radiation in the main steam tunnel to rapidly reduce power and therefore the severity of the transients. This Function is not specifically credited in any ABWR safety analysis, but it is retained for*~~

~~*overall redundancy and diversity as required by the NRC approved licensing basis.*~~

~~*High steam tunnel radiation is detected using four radiation detectors located such that each detector can sense all four main steam lines. One radiation detector is connected to each division of the Process Radiation Monitoring (PRRM) System trip signals are generated when the radiation level exceeds its setpoint. A discrete signal is sent directly from the PRRM divisions to the RPS DTM in the same division (i.e. does not pass through the EMS).*~~

~~*The Allowable Value for this Function is set low enough to provide reasonable assurance that protective action will occur due to excessive radiation but high enough to prevent spurious scrams due to normal steam tunnel radiation levels.*~~

~~*Four divisions of the Steam Line Tunnel Radiation - High Function are required to be OPERABLE to provide confidence that no single failure will preclude protective action from this Function on a valid signal.*~~

~~*RPS initiation (Function 15.a) is required to be OPERABLE in MODES 1 and 2 consistent with the applicability of the RPS in LCO 3.3.1.2, "RPS and MSIV Actuation." The MODES applicability of RPS does not apply to this Function because there is no flow in the steamlines.*~~

~~*Isolation initiation (Function 15.b) is required to be OPERABLE in MODES 1, 2, and 3 consistent with the applicability of LCO 3.6.1.1, "Primary Containment."*~~

STD DEP T1 2.4-2

15. Feedwater Line Differential Pressure

High feedwater line differential pressure could indicate a Feedwater Line Break inside the drywell. This function, concurrent with the drywell pressure- high Function (Function 11.d) provides a condensate pump trip signal to reduce the amount of energy added to the drywell. Feedwater line break mitigation initiation is not specifically credited in any ABWR safety analysis, but it is retained for overall redundancy and diversity as required by the NRC approved licensing basis.

Each DTU (both the RPS/MSIV and ESF DTUs) receives a data value representing measured drywell pressure from the ECF in its division and compares it against a numeric setpoint to determine if a trip is required. Feedwater line differential pressure is measured using four differential pressure transmitters connected to the feedwater lines. The Allowable Value was selected to be as low as possible and be indicative of a LOCA inside primary containment.

Four divisions of Feedwater Line Differential Pressure - High Function are required to be OPERABLE to ensure that no single instrument failure will preclude protective action from this Function on a valid signal.

BASES

Feedwater line break mitigation initiation is required to be OPERABLE in MODES 1, 2, and 3 where considerable energy exists in the RCS, resulting in the limiting transients and accidents.

STD DEP T1 3.4-1

16.a. & b. Suppression Pool Temperature - High

The high temperature trip data from the suppression pool temperature monitoring system is connected to the RPS/MSIV ~~DTM~~ DTU in the same division.

17. Condensate Storage Tank Level - Low

Each ESF ~~DTM~~ DTU receives a data value representing measured condensate storage tank level from the ~~EMS~~ ECF in its division and compares it against a numeric setpoint to determine if a transfer is required.

18. Suppression Pool Water Level - High

Each ESF ~~DTM~~ DTU receives a data value representing measured suppression pool water level from the ~~EMS~~ ECF in its division and compares it against a numeric setpoint to determine if a transfer is required.

19. Main Steam Line Pressure - Low

The pressure transmitter signals are digitized and transmitted to the RPS/MSIV ~~DTM~~ DTUs via the ~~EMS~~ ECF.

20. Main Steam Line Flow - High

The flow transmitter signals are digitized and transmitted to the RPS/MSIV ~~DTM~~ DTUs via the ~~EMS~~ ECF.

21. Condenser Vacuum - Low

The pressure transmitter signals are digitized and transmitted to the RPS/MSIV ~~DTM~~ DTUs via the ~~EMS~~ ECF.

22. Main Steam Tunnel Temperature - High

The temperature signals are digitized and transmitted to the RPS/MSIV and ESF ~~DTM~~ DTUs via the ~~EMS~~ ECF.

23. Main Turbine Area Temperature - High

The temperature transmitter data is digitized and transmitted to the RPS/MSIV ~~DTM~~ DTUs in each division via the associated ~~EMS~~ ECF.

24a. & 24b. Reactor Building Area/Fuel Handling Area, Exhaust Air Radiation - High

Trip signals from the PRRM divisions are sent to the ESF ~~DTM~~ DTUs *in the same division.*

25. RCIC Steam Line Flow - High

The RCIC Steam Line Flow - High data originates in four transmitters that are connected to the RCIC steam lines. The transmitter signals are digitized and transmitted to the ESF ~~DTM~~ DTUs *via the ~~EMS~~* ECF.

STD DEP T1 2.4-3

26. ~~RCIC Steam Supply Line Pressure - Low~~ Not Used

~~Low RCIC steam supply line pressure indicates that the pressure of the steam in the RCIC turbine may be too low to continue operation of the turbine. This isolation is for equipment protection and is not assumed in any transient or accident analysis for the ABWR. However, it also provides a diverse signal to indicate a possible system break. These instruments are included in the Technical Specifications (TS) because of the potential for risk due to possible failure of the instruments preventing RCIC initiations.~~

~~The RCIC Steam Supply Line Pressure - Low data originates in four pressure transmitters that are connected to the system steam line. The transmitter signals are digitized and transmitted to the ESF DTM via the EMS..~~

~~Four channels of the RCIC Steam Supply Line Pressure - Low Function are required to be OPERABLE to ensure that no single instrument failure can preclude isolation initiation or cause a spurious isolation.~~

~~The Allowable Value is selected to be high enough to prevent damage to the system's turbines. This Function is required to be OPERABLE in MODES 1, 2, and 3 consistent with the Applicability for LCO 3.6.1.1, "Primary Containment."~~

STD DEP T1 3.4-1

27. RCIC Equipment Area Temperature - High

RCIC equipment area temperature data originates in temperature transmitters that are appropriately located to detect potential leaks in RCIC steam lines. The temperature transmitter data is digitized and transmitted to the ESF ~~DTMs~~ DTUs *via the ~~EMS~~* ECF.

28. RHR Area Temperature - High

RHR Area Temperature - High data originates in temperature transmitters that are appropriately located to detect leaks in RHR equipment. Four instruments monitor each of the three RHR areas. The temperature transmitter outputs are digitized and transmitted to the ESF ~~DTM~~ DTUs *via the ~~EMS~~* ECF.

BASES

29. CUW Differential Flow - High

Differential mass flow is calculated in the ~~DTM~~ DTU in each ESF division as the sum of the return and blowdown flows subtracted from the suction flow.

The differential pressure transmitter and temperature transmitter data is digitized and transmitted to the ESF ~~DTM~~ DTUs *via the ~~EMS~~ ECF. If the calculated flow difference is too large, each ~~DTM~~* DTU *generates an isolation signal.*

30, 31, & 32, CUW Area Temperatures – High

There are twelve temperature transmitters that provide input to the CUW Area Temperature - High Functions (four per area). The temperature data is digitized and transmitted to the ~~DTM~~ DTUs *via the ~~EMS~~* ECF.

STD DEP 16.3-91

33. ~~Control Building Basement Equipment Cubicle~~ RCW/RSW Heat Exchanger Room *Water Level - High*

There are four water level transmitters that provide input to the RCW/RSW Heat Exchanger Room Water Level - High Function per RCW/RSW division. The water level data is digitized and transmitted to the ~~DTM~~ DTUs *via the ~~EMS~~* ECF.

The RCW/RSW Heat Exchanger Room Water Level ~~1~~- High Allowable Values are set low enough to detect a break of the RSW piping.

STD DEP T1 3.4-1

ACTIONS

A.1, A.2.1.1, A.2.1.2, A.2.2.1, and A.2.2.2

Action A.2.1.1 bypasses all SENSOR CHANNELS, except the NMS, in the affected *division ~~containing the inoperable SENSOR CHANNEL~~. This causes the* trip *logic ~~for all Functions~~ in all ~~the affected division~~* LOGIC CHANNELS, except NMS*, to become 2/3 so a single failure will not result in loss of protection or cause a spurious initiation. However, the degree of redundancy is reduced. As indicated by ~~a~~ the note ~~in the LCD~~, this action is not applicable to the NMS Functions. This action may be implemented for single SENSOR CHANNEL failures in multiple Functions only when all failures are in the same division.*

Action A.2.1.2 is similar to Action A.2.1.1 but applies only to the NMS Functions as indicated by ~~a~~ the *note ~~in the LCD~~. The ~~NMS~~ trip logic in all NMS divisions then becomes 2/3* for all NMS SENSOR CHANNEL functions, *and remains as 2/4* for all remaining SENSOR CHANNEL functions *~~in the SSLC~~. In this condition a single failure will not result in loss of protection or cause a spurious initiation.*

B.1, B.2.1, B.2.2, and B.3

Action B.2.1 requires placing the division containing the second failed SENSOR CHANNEL in division of sensors bypass for those Functions given in the ~~LCO~~ note.

The self-test features of the SSLC, NMS, and ~~EMS~~ ECF *provide a high degree of confidence that no undetected failures will occur in the allowable Completion Time.*

STD DEP 16.3-92

P.1, P.2, R.1, and R.2

If the Function is not restored to OPERABLE status or placed in trip within the allowed Completion Time, or if the affected penetration flow path(s) are not isolated within the allowed Completion Time ~~*specified number of OPERABLE channels/divisions are not restored to OPERABLE status within the allowed Completion Time*~~*, the plant must be placed in a MODE or other specified condition where the LCO does not apply.*

SURVEILLANCE REQUIREMENTS

SR 3.3.1.1.4

A DIVISION FUNCTIONAL TEST is performed on the SRNM ~~and APRM~~ Functions that are required in MODE~~S 1 and~~ 5 to provide confidence that the Functions will perform as intended.

STD DEP T1 3.4-1

SR 3.3.1.1.5 and SR 3.3.1.1.6

The OPERABILITY of the SENSOR CHANNELs is determined by injecting a test signal in a single channel as near to the source as possible to assure that the ~~DTM~~ DTUs *in all divisions create an initiation signal when needed and that the signal is received by the TLU or ~~SLU~~* DLC*.*

SR 3.3.1.1.10 and SR 3.3.1.1.11

CHANNEL CALIBRATION includes calibration of the ~~Analog Trip Modules~~ I/O units *used to implement the ATWS mitigation feature initiation.*

STD DEP 16.3-93

As noted in ~~SR 3.2.1.1.10~~ SR 3.3.1.1.10*, neutron detectors are excluded from SENSOR CHANNEL CALIBRATION because of the difficulty of simulating a meaningful signal.*

BASES

SR 3.3.1.1.14

ISOLATION SYSTEM RESPONSE TIME acceptance criteria are included in Reference ~~10~~9.

STD DEP 16.3-53

REFERENCES

9. ~~DCD Tier 2, Section 1.1.3~~. "Technical Requirements Manual."

10. ~~DCD Tier 2, Table 6.2-7.~~ Not Used

STD DEP T1 3.4-1

Table B3.3.1.1-1 (Page 1 of 3)
SSLC Instrumentation Summary

PARAMETER	*~~EMS~~*ECF *Y/N*	*USAGE*

Table B3.3.1.1-1 (Page 2 of 3)
SSLC Instrumentation Summary

PARAMETER	*~~EMS~~*ECF *Y/N*	*USAGE*
11. Drywell Pressure-High	*Y*	*RPS, LPFL, RCIC, CAM, SGTS, DG, HPCF, ADS, CIV, RCW/RSW, CUW Iso*, Trip of Condensate Pumps (b*)*
15. ~~Main Steam Tunnel Radiation-High~~ Feedwater Line Differential Pressure – High	*~~N~~*Y	*~~RPS~~*Trip of Condensate Pumps (b) *~~MSIV~~*
*26. ~~RCIC Steam Supply Line Pressure-Low~~*Not Used	*~~Y~~*	*~~ISO of RCIC~~*

Table B3.3.1.1-1 (Page 3 of 3)
SSLC Instrumentation Summary

PARAMETER	*~~EMS~~*ECF *Y/N*	*USAGE*

(b) Concurrent drywell pressure – high (Function 11) and feedwater line differential pressure – high (Function 15)

BASES

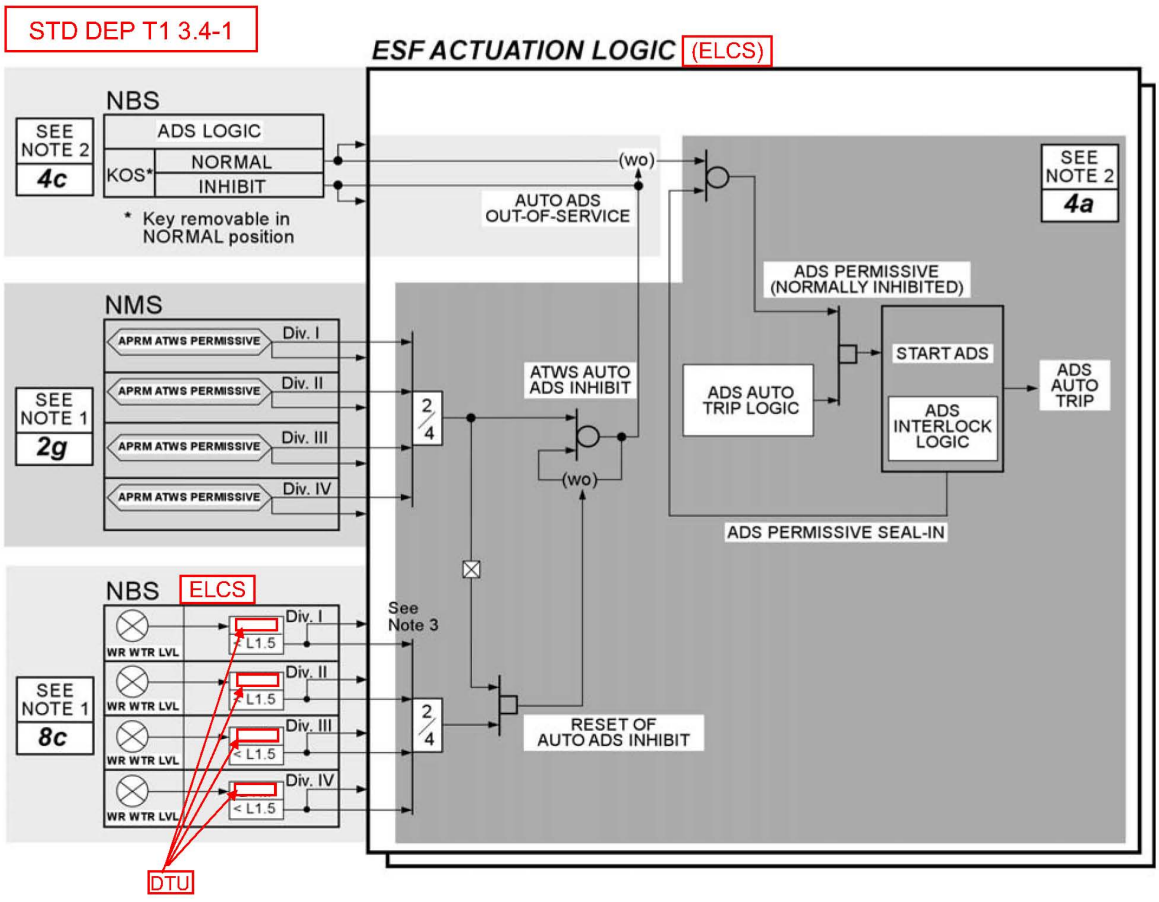

NOTES:
1. FUNCTION NUMBER AS LISTED IN TABLE 3.3.1.1-1 SSLC SENSOR INSTRUMENTATION
2. FUNCTION NUMBER AS LISTED IN TABLE 3.3.1.4-1 ESF ACTUATION INSTRUMENTATION
3. [ ] DIVISION-OF-SENSORS BYPASS APPLIES TO THIS VOTER

ELCS

FIGURE B 3.3.1.1-1 ADS INHIBIT INSTRUMENTATION CHANNELS

BASES

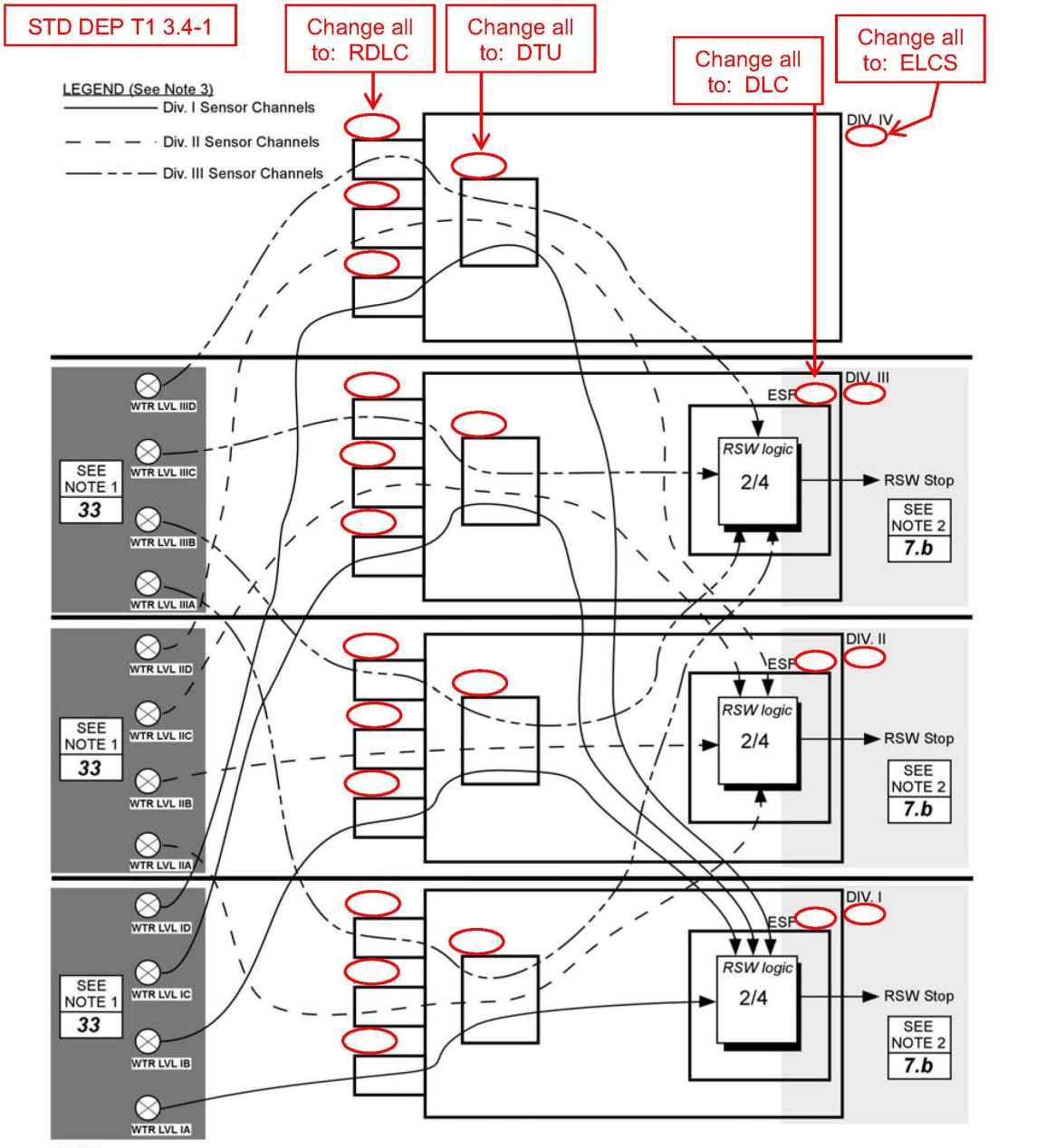

NOTES:
1. FUNCTION NUMBER AS LISTED IN TABLE 3.3.1.1-1 SSLC SENSOR INSTRUMENTATION
2. FUNCTION NUMBER AS LISTED IN TABLE 3.3.1.4-1 ESF ACTUATION INSTRUMENTATION
3. ALL INTER-DIVISIONAL CONNECTIONS USE ISOLATED FIBER OPTIC TRANSMISSION

FIGURE B 3.3.1.1-2 RCW/RSW HX ROOM LEAK DETECTION INSTRUMENTATION CHANNELS

B 3.3 INSTRUMENTATION

B 3.3.1.2 Reactor Protection System (RPS) and Main Steam Isolation Valve (MSIV) Actuation

BASES

The information in this section of the reference ABWR DCD, including all subsections, is incorporated by reference with the following departures.

STD DEP 7.2-3
STD DEP 16.3-54
STD DEP 16.3-57
STD DEP 16.3-81
STD DEP 16.3-82

APPLICABLE SAFETY ANALYSIS, LCO and APPLICABILITY

STD DEP 16.3-81

1. RPS Actuation

The RPS Actuation LOGIC CHANNELS (except for NMS) and OUTPUT CHANNELS *must be OPERABLE in MODE 1, MODE 2, and in MODE 5 with any control rod withdrawn from a core cell containing at least one fuel assembly.* The NMS (SRNM and APRM) LOGIC CHANNELS must be OPERABLE when the associated Functions in LCO 3.3.1.1 are required to be OPERABLE.

STD DEP 7.2-3

2. MSIV and MSL Drain Valves Actuation

The MSIV and MSL Drain Valves Actuation Function uses a TLU in all four divisions. The TLU acquires trip information from the ~~DTMs~~ DTUs and sends actuation signals to the OLUs.

BASES

ACTIONS

STD DEP 16.3-82

B.1, B.2, and B.3

Condition B occurs if two LOGIC CHANNELs for the same Function *or MSIV manual channels become inoperable in a fashion that does not result in an Actuation.*

F.1 and F.2

Condition F occurs if two OUTPUT CHANNELs for the same Function *become inoperable in a fashion that does not result in an Actuation.*

STD DEP 16.3-57

I.1 and I.2

If one of the manual scram divisions becomes inoperable then manual scram is unavailable. Placing the affected division in trip (Action I.1) causes the manual scram logic to become 1/1. ~~*Note that the automatic actuation logic becomes 1/3 in this condition so there is an increased vulnerability to spurious trips.*~~

STD DEP 16.3-82

J.1

This Condition assures that appropriate actions are taken for ~~*multiple*~~ one or more *inoperable RPS Actuation Functions while in MODES 1 or 2.*

K.1

This Condition assures that appropriate actions are taken for ~~*multiple*~~ one or more *inoperable RPS Actuation Functions while in MODE 5 with any control rod withdrawn from a core cell containing at least one fuel assembly.*

L.1, L.2.1 and L.2.2

This Condition assures that appropriate actions are taken for ~~*multiple*~~ one or more *inoperable MSIV Actuation Functions.*

BASES

SURVEILLANCE REQUIREMENTS

STD DEP 16.3-54

SR 3.3.1.2.6

This SR ensures that the RPS RESPONSE TIMES are less than or equal to the maximum values assumed in the accident analysis. Response time testing acceptance criteria are included in Reference 4.

SR 3.3.1.2.7

This SR ensures that the individual MSIV channel response times are less than or equal to the maximum values assumed in the accident analysis. The instrument response times must be added to the MSIV closure times to obtain the ISOLATION SYSTEM RESPONSE TIME. Response time testing acceptance criteria are included in Reference 4.

STD DEP 16.3-54

REFERENCES

4. "Technical Requirements Manual."

B 3.3 INSTRUMENTATION

B 3.3.1.3 Standby Liquid Control (SLC) and Feedwater Runback (FWRB) Actuation

BASES

The information in this section of the reference ABWR DCD, including all subsections, is incorporated by reference with the following departure.

STD DEP 16.3-83

APPLICABLE SAFETY. ANALYSIS, LCO, and APPLICABILITY

3. Manual ATWS-ARI/SLCS Initiation

The Manual ATWS-ARI/SLCS Initiation pushbutton channels introduce signals into the SLC and FWRB logic to provide manual initiation capability that is redundant to the automatic initiation. There are two pushbuttons and both must be ~~activated~~ actuated *to initiate* the *SLC*S *and FWRB* functions. *~~Each switch has four contacts for SLC and FWRB initiation. Signals from both manual switches are sent to the logic in all four divisions. Each contact is a separate channel so there are two manual initiation channels per division~~.* Each pushbutton represents a single manual initiation channel (A, B), and sends redundant initiation signals to each of the channels of the RFCS Fault Tolerant Digital Controller (FTDC). The RFCS FTDC sends redundant manual initiation status signals to each of four ATWS Logic Processors (Divisions I, II, III, and IV). Each Logic Processor performs 2-out-of-3 voting of the manual initiation status signals received from the RFCS FTDC. *The ~~contacts~~* logic *used for manual ARI ~~are~~* is *covered in 3.3.4.1, "ATWS & EOC-RPT Instrumentation."*

B 3.3 INSTRUMENTATION

B 3.3.1.4 Engineered Safety Features (ESF) Actuation Instrumentation

BASES

The information in this section of the reference ABWR DCD, including all subsections, is incorporated by reference with the following departures.

STD DEP T1 2.4-2
STD DEP T1 2.4-3
STD DEP T1 3.4-1
STD DEP 7.3-7
STD DEP 7.3-17
STD DEP 8.3-1
STD DEP 16.3-87
STD DEP 16.3-88

STD DEP 8.3-1
The plant medium voltage electrical system alternate design description was provided in ABWR Licensing Topical Report NEDO-33335, Advanced Boiling Water Reactor (ABWR) Plant Medium Voltage Electrical System Design, May 2007. LTR pages B 3.3-119, B 3.3-120, B 3.3-122, and B 3.3-129 are incorporated by reference.

STD DEP T1 3.4-1
STD DEP 7.3-17
BACKGROUND *The final initiation signals for the non-MSIV valves are transmitted from the ~~SSLC~~* ESF *~~SLUs~~* DLCs *to remote actuation devices (OUTPUT CHANNELS). The non-MSIV isolation valve logic is contained in ~~SLU pairs in four~~ divisions* I, II, and III *as described in LCO B 3.3.1.1, "SSLC Sensor Instrumentation".*

STD DEP T1 3.4-1

A description of the operation of the ESF SENSOR CHANNELS and LOGIC CHANNELS is given in LCO 3.3.1.1, "SSLC Sensor Instrumentation". For ECCS Functions, *~~Each of a redundant pair of ESF~~ ~~SLU~~* two channels *send~~s~~ initiation data to an OUTPUT CHANNEL via the ~~EMS~~* ECF. For ADS, the *~~The~~ OUTPUT CHANNEL must receive initiation data from both ~~SLU~~*DLC*s before system actuation will occur.* For LPCF, HPCF, and RCIC, there are two microprocessor channels within a single ESF DLC. One OUTPUT CHANNEL initiation data actuates the associated valve(s) and the other OUTPUT CHANNEL initiation data actuates the associated pump(s). Both the associated pump(s) and valve(s) must be initiated for activation of the function. *The 2/2 output actuation logic* for ADS *~~(e.g., ADS)~~ is provided to reduce the potential for inadvertent ESF actuation and the resulting stress on plant equipment and attendant plant risk. ~~There is an OUTPUT CHANNEL for each required device (pump, valve, etc.).~~*

Except for ECCS functions, most other ESF functions are implemented using a single channel within a single DLC per division. Some ESF isolation functions

are provided with redundant DLCs with a bypassable final voter (e.g., RCW Inside Drywell Isolation) to reduce the risk of plant operational impact of DLC failure.

~~*One of the redundant SLU inputs to an OUTPUT CHANNEL except for the ADS OUTPUT CHANNELS - may be bypassed either manually or automatically be the SSLC self test. When one SLU input to an OUTPUT CHANNEL is bypassed the actuation logic becomes one-of-one.*~~

Manual initiation capability is provided for the systems and devices addressed by this LCO. There are three manual switches for containment isolation, one each in division I, II, and III. For isolation functions implemented with redundant channels, each ~~*Each of these*~~ *switch~~es~~ has* ~~*two contacts with*~~ *one contact routed to* ~~*one*~~ both *of the associated redundant* ~~*SLU*~~ channel*s* ~~*pairs and the other contact routed to the other SLU*~~*. Together, these switches cause closure of all isolation valves, except for RClC and MSIVs.* ~~*Any two of the switches will isolate all isolatable paths, except for RCIC.*~~ *RCIC manual isolation is provided by two independent switches in divisions I and II. The RCIC manual isolation switch logic is as described for containment isolation.*

STD DEP 7.3-7
STD DEP T1 3.4-1

Manual ECCS injection initiation for RCIC, LPFL A, B, & C, HPCF B & C*, and ESF support features are implemented as described for containment isolation. HPCF C* diverse logic *manual initiation uses hardwired signals that bypass* ~~*the EMS and*~~ *the SSLC LOGIC CHANNELS* including the ECF*. ADS manual initiation uses* ~~*two*~~ one *switch~~es~~ in each ADS division. Each switch has one contact* ~~*that is*~~ *routed*, respectively, to both DLCs ~~*to one of member of the SLU pair*~~ *associated with ADS* in the division. Arming and depressing either divisional manual initiation ~~*Both*~~ *switches in one division must be pressed to* would *open the ADS valves. The ADS manual inhibit for ATWS mitigation has one switch in each ADS division. Each switch has* ~~*two*~~ one *contact~~s~~ which* ~~*are*~~is *connected to* ~~*the SLU*~~ both DLCs ~~*pair*~~ *associated with ADS in the division.*

STD DEP T1 3.4-1

CHANNEL DEFINITIONS

The channel structure for the channel types covered by this LCO are depicted in Figures B 3.3.1.4-1 through B 3.3.1.4-~~*4*~~5*. The channel structure in these Figures is similar with the basic structure as shown in Figure B 3.3.1.4-1. The channel characteristics shown in the* Figures ~~*Figure B 3.3.1.4-1*~~ *are:*

Figure B 3.3.1.4-1 (Containment Isolation, ESF Support Systems);

- A single channel, including manual and automatic features, initiates the Function.

Figures B 3.3.1.4-2 (ECCS except ADS and HPCF C), B 3.3.4.1-3 (HPCF C);

- *Each of the redundant* microprocessor channels ~~*SLU pairs*~~ *is considered to be a separate* ~~*LOGIC CHANNEL*~~ channel although they originate within the same DLC.

- Figure B 3.3.1.4-3 shows the hardwired manual channel for HPCF C diverse logic which applies only to division III.

- ~~*The separate contacts from a*~~ A *single switch operator* ~~*are shown as*~~ provides the manual initiation signal to ~~*separate*~~ both *manual initiation channels.*

Figure B 3.3.1.4-4 (ADS);

- *The OUTPUT CHANNEL consists of two load drivers in series* ~~*with the LOGIC CHANNEL bypass included in the OUTPUT CHANNEL*~~.

STD DEP 7.3-7

- The ADS has one manual initiation switch, one ATWS Manual ADS Inhibit, and no LOGIC CHANNEL bypass capability.

STD DEP T1 3.4-1

- A SENSOR CHANNEL provides sensor data to both of the associated DLCs.

Figure B 3.3.1.4-5 (RCW/RSW Isolation);

- The OUTPUT CHANNEL includes two load drivers in series with the LOGIC CHANNEL bypass included in the OUTPUT CHANNEL.

- *A single SENSOR CHANNEL provides sensor data to both of the associated* ~~*SLUs*~~ DLCs.

- The RCW/RSW Isolation has one manual initiation switch.

~~*The differences in the other Figures are:*~~

- ~~*Figure B 3.3.1.4-2 uses the SLU 3/4 pair and applies only to divisions I and II.*~~

- ~~*Figure B 3.3.1.4-3 shows the hardwired manual channel for HPCF Cwhich applies only to division III.*~~

- ~~*Figure B 3.3.1.4-4 shows the ADS which has manual initiation switches, one ATWS Manual ADS Inhibit, and no LOGIC CHANNEL bypass capability.*~~

BASES

APPLICABLE SAFETY ANALYSIS, LCO and APPLICABILITY

1a, 1b, 2.a, 2.b, 3.a, 3.b. ECCS Pump Discharge Flow - Low and Pressure - High

One flow and one pressure transmitter per pump are used to detect the associated subsystem discharge pressure to verify operation of the pump. Note that these pressure transmitters are not the same as the ones used in the ADS permissive described in B 3.3.1.1, "SSLC Sensor Instrumentation". Data values representing pressure and flow are received by the ESF ~~SLUs~~ DLCs *associated with the pump initiation division via the ~~EMS~~* ECF *in the same division. The data values are compared to the respective setpoints in the ESF ~~SLU~~* DLC *~~pair DTM equivalent Function~~ to determine if the associated minimum flow valve is to be closed or opened. ~~The LPFL minimum flow valves are time delayed so the valves will not open unless high pressure concurrent with low flow persists for a specified time. The time delay is provided to limit reactor vessel inventory loss during startup of the RHR shutdown cooling mode.~~*

2.c. HPCF Pump Suction Pressure - Low

The suction pressure data originates in a pressure transmitter and is sent via the ~~EMS~~ ECF *to the ESF ~~SLU pair~~* DLCs *in the division that controls the HPCF pump being monitored. The ~~SLU~~* DLC *logic is arranged so that Low suction pressure must exist for a specified amount of time before pump start will be inhibited to prevent spurious inhibits due to suction pressure transients. The HPCF low suction pressure signal ~~is automatically~~* must be manually *reset ~~(i.e. no manual reset needed to remove the pump start inhibit when suction pressure recovers)~~. The HPCF Suction Pressure - Low Function is assumed to be OPERABLE and will not cause a spurious pump start inhibit during the transients and accidents analyzed in References 1, 2, and 3.*

1.c, 2.d, 3.c, 4.a. ECCS Systems Initiation.

These Functions are the LOGIC CHANNELS that send initiation data to the OUTPUT CHANNELS for the ECCS systems. The LOGIC CHANNELS for a specific ECCS subsystem are in the same division as the subsystem. Two LOGIC CHANNELS ~~(dual redundant SLUs)~~ must be OPERABLE when the associated ECCS feature is required to be OPERABLE. The applicability basis for the ECCS systems are given in LCO 3.5.1, "ECCS - Operating", and LCO 3.5.2, "ECCS - Shutdown". A LOGIC CHANNEL is OPERABLE when it is capable of generating device actuation data and transmitting it to the OUTPUT CHANNELS.

1.e, 2.f, 3.e. ECCS System Injection Manual Initiation - Except HPCF C.

The Manual Initiation push button channels introduce signals into the appropriate ECCS logic to provide manual initiation capability that is redundant to the automatic initiation SENSOR CHANNELS. ~~*There is one push button with two contacts for each of the ECCS pumps.*~~ *Manual initiation data is acquired by* ~~*the SLU pair*~~ each LOGIC CHANNEL ~~*(one contact to each SLU in the pair LOGIC CHANNEL)*~~ *that controls the ECCS pumping subsystem, except for HPCF C* diverse logic*. HPCF C* diverse logic *Manual Initiation is hardwired to provide a diverse means of ECCS initiation.* For each function, both LOGIC CHANNELS must be OPERABLE for the associated Manual Initiation Function to be OPERABLE.

The Manual Initiation Function is not assumed in any accident or transient analyses for the ABWR. However, the Function is retained for overall redundancy and diversity of the ECCS features as required by the NRC in the plant licensing basis.

There is no Allowable Value for this Function since it is mechanically actuated based solely on the position of the manual initiation switches. Two channels of the Manual Initiation Function for each ECCS pump, except HPCF C diverse logic*, are required to be OPERABLE when the associated ECCS is required to be OPERABLE. Refer to LCO 3.5.1, "ECCS - Operating" and LCO 3.5.2, "ECCS - Shutdown" for Applicability Bases for the ECCS subsystems.*

2.g. HPCF C Diverse Logic *Manual Initiation*

The HPCF C Diverse Logic *Manual Initiation channel completely bypasses the SSLC channels (see figure B 3.3.1.4-3) and provides direct control of the actuated devices. One manual pushbutton causes HPCF C to align for injection and initiates the pump start sequence.*

The HPCF C Diverse Logic *Manual Initiation Function is not assumed in any accident or transient analyses for the ABWR. However, the Function is retained for overall redundancy and diversity of the ECCS features as required by the NRC in the plant licensing basis.*

There is no Allowable Value for this Function since it is mechanically actuated based solely on the position of the manual switch. One channel of the HPCF C Diverse Logic *Manual Initiation Function is required to be OPERABLE when HPCF C is required to be OPERABLE. Refer to LCO 3.5.1, "ECCS - Operating" and LCO 3.5.2, "ECCS-Shutdown" for Applicability Bases for the ECCS subsystems.*

4.b. ADS Device Actuation.

Each ADS valve has two OUTPUT CHANNELS and an associated solenoid valve (i.e., each ADS valve has two solenoid valves with the "A" solenoid valve actuated from the ADS division I OUTPUT CHANNEL and the "B" solenoid valve actuated from the ADS division II OUTPUT CHANNEL). *Energizing either of the OUTPUT CHANNELS will cause the valve to open. Each* ~~*output*~~ OUTPUT CHANNEL *receives an appropriate signal from the associated LOGIC CHANNELS when a protective action is required. Two OUTPUT CHANNELS must be OPERABLE when ADS is required to be OPERABLE. The channels are OPERABLE when they are capable of going to the state needed to perform the protective action and recovering to the normal state.*

4.c. ADS Manual Initiation

The Manual Initiation push button channels introduce signals into the ADS logic to provide manual initiation capability that is redundant to the automatic SENSOR CHANNELS. There ~~*are two*~~ is one *push button*~~*s*~~ *for each ADS division trip system (total of* ~~*four*~~ two *pushbuttons). Each member of the* ~~*SLU*~~ DLC *pair used to implement ADS acquires data from one of the switches (see Figure B 3.3.1.4-4). The manual actuation data is acquired by the* ~~*SLUs*~~ DLCs *that control the ADS subsystems.* ~~*Both switches associated with one of the ADS divisions must be activated to initiate ADS in that division*~~.

4.d and e. ADS Division I/Division II ECCS Pump Discharge Pressure - High (permissive)

Pump discharge pressure data originates in two pressure transmitters on the discharge side of each of the three low pressure and two high pressure ECCS pumps. The data from one transmitter on each pump is sent to the ESF ~~*SLUs*~~ DLCs *associated with ADS 1 and the data from the second transmitter is sent to the ESF* ~~*SLUs*~~ DLCs *associated with ADS 2. The* ~~*SLU*~~ DLC *logic will declare an ADS permissive if any one of the 5 pressure values are above their respective setpoints.*

4.f. ATWS Manual ADS Inhibit

The ATWS Manual ADS Inhibit push button channels introduce signals into the ADS logic to provide manual ADS inhibit capability that is redundant to the automatic SENSOR CHANNELS. There is one push button for each ADS division trip system. ~~*Each pushbutton has two contacts.*~~ ~~*Each member of the SLU pair*~~ Both DLCs *used to implement ADS* within a division *acquire*~~*s*~~ *data from* ~~*one of the contacts on*~~ *the switch in its division (see Figure B 3.3.1.4-4).*

5.a, 5.b, 7.d, 7.e, Divisions I, II, & III Loss of Voltage - ~~6.9~~ 4.16 *kV and Degraded Voltage - ~~6.9~~* 4.16 *kV.*

The undervoltage relay trip signals are transmitted to the ~~SLU pair~~ DLCs *in the associated division via the ~~EMS~~* ECF.

5.e Diesel Generator Manual Initiation

The Manual Initiation push button channels introduce signals into the appropriate ESF feature logic to provide manual initiation capability that is redundant to the automatic initiation SENSOR CHANNELS. There is one push button for each of the ESF features with manual initiation capability. The manual initiation data is acquired by the ~~SLC pair~~ DLC that controls the ESF feature.

7.a Reactor Building Cooling Water/ Reactor *Service Water Initiation*

7.c RCW/RSW Manual Initiation

The Manual Initiation push button channels introduce signals into the appropriate ESF feature logic to provide manual initiation capability that is redundant to the automatic initiation SENSOR CHANNELS. There is one push button for each of the RCW/RSW manual initiation channels. The manual initiation data is acquired by the DLC that controls the ESF feature.

The ESF Manual Initiation Functions are not assumed in any accident or transient analyses for the ABWR. However, the Function is retained for overall redundancy and diversity of the ESF as required by the NRC in the plant licensing basis.

There is no Allowable Value for this Function since it is mechanically actuated based solely on the position of the manual initiation switches. Each channel of the Manual Initiation Function is required to be OPERABLE when the associated ESF feature is required to be OPERABLE.

9.c Suppression Pool Cooling Manual Initiation

The Manual Initiation push button channels introduce signals into the appropriate ESF feature logic to provide manual initiation capability that is redundant to the automatic initiation SENSOR CHANNELS. There is one push button for each of the suppression pool cooling manual initiation channels. The manual initiation data is acquired by the DLC that controls the ESF feature.

The ESF Manual Initiation Functions are not assumed in any accident or transient analyses for the ABWR. However, the Function is retained for overall

redundancy and diversity of the ESF as required by the NRC in the plant licensing basis.

There is no Allowable Value for this Function since it is mechanically actuated based solely on the position of the manual initiation switches. Each channel of the Manual Initiation Function is required to be OPERABLE when the associated ESF feature is required to be OPERABLE.

10.a, 10.e, 10.g, *13.a, and 14.a Isolation Initiation.*

These Functions are the LOGIC CHANNELS that send initiation data to the OUTPUT CHANNELS for the various isolation valves. ~~There are two LOGIC CHANNELS in each division that contains isolation initiation.~~ The channels provide actuation signals for each of the isolation valves in the same division. The sensor Functions for each of the isolation valves are as described in LCO 3.3.1.1, "SSLC Sensor Instrumentation".

~~*Two*~~ For Functions 10.a, 10.g, 13.a, and 14.a, one *LOGIC CHANNEL~~S (dual redundant SLUs)~~ must be OPERABLE in each division with isolation capability when the associated isolation Function is required to be OPERABLE. See LCO 3.3.1.1, "SSLC Sensor Instrumentation" for the basis and the divisions associated with each isolation function. A LOGIC CHANNEL is OPERABLE when it is capable of generating initiation data and transmitting it to the associated OUTPUT CHANNELs.*

Function 10.e is implemented using two DLCs with a final bypassable voter. The two DLCs, the voters, and the bypasses are treated as a separate channel. The channel is OPERABLE if both of the DLCs and the voters are OPERABLE, or if one of the two DLCs are OPERABLE with the second DLC bypassed so that the OPERABLE channel can initiate isolation action.

10.c & 10.d. Drywell Sump Drain Line LCW/HCW Radiation - High

The detectors are connected to the PRRM system which sends a trip signal to the division I ~~SLU pair~~ DLC*.*

11. Containment Isolation Manual Initiation

There is a push button in each division that provides containment isolation initiation. ~~Each divisional pushbutton has two contacts. Each contact is associated with only one of the redundant SLUs within a containment isolation division. Each of the contacts and its associated data transmission is considered to be one manual initiation channel.~~ Each divisional manual isolation pushbutton causes closure of all isolation valves in the division, except for RCIC. ~~There are two divisional manual pushbuttons associated with each isolated path~~

BASES

~~with two active isolation valves. Either of the pushbuttons associated with a flow path causes the flow path to be isolated.~~

STD DEP T1 3.4-1
STD DEP T1 2.4-3

12.a RCIC Isolation Initiation.

These Functions are the LOGIC CHANNELS that send initiation data to the OUTPUT CHANNELS for the RCIC isolation valves. ~~*There are two LOGIC CHANNELS in each division that contains RCIC isolation initiation.*~~ *The channels provide actuation signals for each of the isolation valves in the same division. The sensor Functions for the RCIC isolation valves*~~*, except for RCIC Turbine Exhaust Diaphragm Pressure - High,*~~ *are as described in LCO 3.3.1.1, "SSLC Sensor Instrumentation".*

STD DEP T1 3.4-1

~~*Two*~~ One *LOGIC CHANNEL*~~*S (dual redundant SLUs)*~~ *must be OPERABLE in each RCIC isolation division (divisions I and II) when the associated isolation Function is required to be OPERABLE.*

12.c. RCIC Isolation Manual Initiation

~~*Each pushbutton has two contacts. Each contact is associated with only one of the redundant SLUs within a RCIC isolation division. Each of the contacts and its associated data transmission is considered to be one manual initiation channel.*~~ *Each divisional manual isolation pushbutton causes closure of all the RCIC isolation valves in the division. Either of the pushbuttons causes isolation of all isolated flow paths within RCIC system.*

There is no Allowable Value for this Function since the division is mechanically actuated based solely on the position of the push buttons. ~~*Two*~~ One *channel*~~*s*~~ *of the RCIC Manual Isolation Initiation Function* ~~*are*~~ is *required to be OPERABLE in each RCIC isolation division when RCIC isolation is required to be OPERABLE.*

STD DEP T1 2.4-3

~~*12.d. RCIC Turbine Exhaust Diaphragm Pressure - High*~~

~~*High turbine exhaust diaphragm pressure indicates that the pressure may be too high to continue operation of the RCIC turbine. That is, one of two exhaust diaphragms has ruptured and pressure is reaching turbine casing pressure limits. This isolation is for equipment protection and is not assumed in any transient or accident analysis for the ABWR. These instruments are included in the TS because of the potential for risk due to possible failure of the instruments preventing RCIC initiations.*~~

~~*The RCIC Turbine Exhaust Diaphragm Pressure - High data originates in four transmitters that are connected to the space between the rupture diaphragms on the turbine exhaust line. The division I and division II ESF SLU pairs each receive trip data from two of the turbine exhaust diaphragm pressure transmitters. Two-of-two isolation logic is used in each divisional SLU pair for this Function. Two channels of the RCIC Turbine Exhaust Diaphragm Pressure - High Functions are available in each of two divisions (Division I and division II) and are required to be OPERABLE to ensure that no single instrument failure can preclude the isolation function or cause a spurious isolation.*~~

~~*The Allowable Values are high enough to prevent damage to the turbines.*~~

STD DEP T1 3.4-1
STD DEP T1 2.4-2

1.d, 2.e, 3.d, 5.d, 6.b, 7.b, 8.b, 9.b, 10.b, 10.f, 10.h, ~~*11.b*~~*, 12.b, 13.b,* ~~*and*~~ *14.b,* and 15.b. *ESF and Isolation Device Actuation.*

13.c. CUW Isolation on SLC Initiation

Isolation of the CUW System is required when the SLC System has been initiated to prevent dilution and removal of the boron solution by the CUW System (Reference 4). SLC System initiation signals originate from the two SLC pump start signals. The SLC pump A start signal is connected to a division I ~~*SLU pair*~~ DLC *and the SLC pump B signal to a division II* ~~*SLU pair*~~ DLC*. The data is shared between division via suitable isolators. CUW isolation occurs when either pump is started.*

STD DEP T1 2.4-2

15.a. Feedwater Line Break Mitigation Initiation.

These Functions are the LOGIC CHANNELS that send initiation data to the OUTPUT CHANNELS for the Feedwater Line Break Mitigation Actuation (e.g., trip of the condensate pumps). The LOGIC CHANNEL for a specific condensate pump is in the same division as the condensate pump. One LOGIC CHANNEL must be OPERABLE when the associated condensate pump is required to be OPERABLE. The applicability basis for the Feedwater Line Break Mitigation are given in LCO 3.3.1.1, "SSLC Sensor Instrumentation." A LOGIC CHANNEL is OPERABLE when it is capable of generating device actuation data and transmitting it to the OUTPUT CHANNELS.

Feedwater line break mitigation initiation is required to be OPERABLE in MODES 1, 2, and 3 consistent with the Applicability of LCO 3.3.1.1, "SSLC Sensor Instrumentation."

BASES

STD DEP T1 2.4-2

ACTIONS

B.1~~, B.2.1, and B.2.2~~

This condition assures that appropriate actions are taken when one or more *~~of a redundant pair of~~ ESF LOGIC CHANNELS or one* or more ESF OUTPUT CHANNELS *~~of a redundant pair of manual initiation channels~~ is inoperable. ~~Placing the associated OUTPUT CHANNEL in bypass causes the logic to change from 2 out of 2 to 1 out of 1 so initiation capability is maintained. However, the ESF feature is more vulnerable to spurious actuation.~~*

The 1 hour Completion Time for B.1 is allowed for restoring the inoperable channel. The probability of an event requiring the Function coupled with an undetected failure in the associated redundant channel within the Completion Time is low. Also, redundant ESF features may provide adequate plant protection given the availability of the associated features. *~~provides sufficient time for the operator to determine which OUTPUT CHANNELS are associated with the inoperable channel. Plant operation in this condition for the specified time does not contribute significantly to plant risk.~~*

~~Since plant protection is maintained and the potential for a spurious trip is low because of the high reliability of the logic, operation in this condition for an extended period is acceptable. Therefore, a Completion Time of 30 days is allowed for restoring the inoperable channel (Action B.2.1). The probability of an event requiring the Function coupled with an undetected failure in the associated redundant LOGIC CHANNEL in the Completion Time is quite low. Also, redundant ESF features may provide adequate plant protection given the unavailability of the associated features. The self-test capabilities of the SSLC provide a high degree of confidence that no undetected failures will occur within the allowable Completion Time.~~

~~Action B.2.2 provides an alternate to Action B.2.1. Verification of the OPERABILITY of any redundant feature(s) provides confidence that adequate plant protection capability is maintained. Action B.2.2 does not apply to features with no redundant alternate. The Completion Time for Action B.2.2 is as given for Action B.2.1.~~

~~Implementing either of the Actions B.2.1 or B.2.2 provides confidence that plant protection is within the design basis so no further Action is required.~~

~~These Actions apply~~ This Action applies *to all* ECCS *LOGIC CHANNELS* and OUTPUT CHANNELS*, except ADS.~~, and the isolation initiation manual channels. They do not apply to the ADS LOGIC CHANNELS because they cannot be bypassed at the OUTPUT CHANNEL.~~* This Action also applies to all ESF LOGIC CHANNELS and OUTPUT CHANNELS.

C.1

This Condition is provided to assure that appropriate action is taken for single or multiple inoperable SENSOR CHANNELS ~~*channels*~~ *that cause automatic or manual actuation of an ESF feature to become unavailable. However, automatic and manual initiation for redundant features are not affected.*

This Action applies to

~~*- all LOGIC CHANNELS, except ADS*~~

~~*- isolation initiation manual channels*~~

D.1 and D.2

This Condition is provided to assure that appropriate action is taken for inoperable OUTPUT CHANNELS or an inoperable HPCF C diverse logic manual initiation channel. An inoperable OUTPUT CHANNEL makes the associated device (pump, valve, etc.) unable to perform its protective action. ~~*A failure in the HPCF C diverse logic manual channel causes a loss of its system level manual initiation capability.*~~

Action D.1 applies to ~~*all*~~ *OUTPUT CHANNELS*~~*, except ADS. ADS is not included because of the nature of the redundancy used in the ADS systems*~~ and device actuation for DG actuation, SGTS actuation, RCW/RSW actuation, CAM actuation, CIV isolation, RCW Inside Drywell isolation, RCIC isolation, CUW isolation, and SD Cooling isolation. *Action D.2 applies to the isolation valves that can be closed without disrupting plant operation or jeopardizing plant safety.*

E.1 and E.2

This Condition addresses SENSOR CHANNEL failures for isolation SENSOR CHANNEL Functions that have one or two channels. For these Functions a failure in the SENSOR CHANNEL causes loss of automatic initiation or the initiation logic becomes 1/1. However, manual initiation is still available.

Action E.1 requires restoration of the inoperable channel to OPERABLE status. Action E.2 provides an alternate ~~*of closing the associated isolation valves which accomplishes the intended protective action*~~ declaring the associated device(s) inoperable.

These Actions apply only to the Drywell Sump Drain Line LCW/HCW Radiation - High and CUW Isolation on SLC Initiation Functions since these are the isolation Functions with one ~~*or two*~~ *SENSOR CHANNEL*~~*S*~~*.*

F.1

This Condition is provided to assure that appropriate action is taken for ~~multiple~~ one or more *inoperable manual initiation channels ~~for Functions that have use 2/2 logic for manual initiation of the system or subsystem~~. The loss of* a manual initiation channel for *both* one channel and two *channel~~s~~* Functions *causes loss of the system manual initiation. However, automatic initiation is still available and the systems may still be manually operated using the individual device manual controls.*

This Action applies to all ECCS and ESF *manual initiation channels, except the ADS* and the HPCF C diverse logic. *ADS* manual initiation channels are addressed in Conditions H and I. HPCF C diverse logic manual initiation channel is addressed in Condition D. *~~is not included because its manual initiation is different.~~*

STD DEP 16.3-87

G.1

If the specified actions for Conditions ~~A,~~ B, C, D, E *or ~~E~~ F are not met within the specified Completion Times the feature(s) associated with the inoperable channel must be declared inoperable. Declaring the associated feature inoperable will cause entry into the appropriate LCOs that address the feature so appropriate compensatory measures will be taken.*

STD DEP T1 3.4-1

H.1

This condition assures appropriate compensatory measures are taken for failures in ~~one of the two~~ an ADS *OUTPUT CHANNEL~~S~~ ~~associated with one or more ADS valves~~* in one ADS division*, an ADS LOGIC CHANNEL in one division, an ADS manual initiation channel in one division, an ATWS Manual ADS Inhibit channel in one division, or all of the ADS Division ~~1~~*I*/~~11~~*II *ECCS Pump Discharge Pressure - High (permissive) Functions in one division. For these failures the ADS Function is still available, but the redundancy is reduced, (i.e. logic is 1/1 instead of 1/2). The high pressure ECCS pumps are still capable of providing core cooling and inventory make up. In addition, there are manual controls for the relief solenoid on the SRVs that are independent of the ~~SSLC~~* ELCS *ADS logic and devices. The relief solenoids do not share any signal processing devices with ADS and are powered from three divisional 125 VDC sources. Therefore, there is a high degree of diversity to protect against a small break LOCA.*

Action H.1 restores the channel(s) to OPERABLE status. When two or more high pressure ECCS systems are OPERABLE there is a high degree of redundancy and diversity so operation is permitted for 7 days. If only one high pressure system is OPERABLE the Completion Time is reduced to 3 days. These Completion Times are acceptable because of the specified high reliability of the devices used in the ~~SSLC~~ ELCS *logic and SRV manual relief, the redundancy in ADS valves (i.e. 8 ADS valves, 5 needed for accident mitigation), and the low probability of an event requiring ADS, coupled with a failure that would defeat a redundant ADS Function and a failure in all high pressure ECCS sub-systems, occurring within that time period.*

This Action applies to the ADS LOGIC CHANNELS, ADS OUTPUT CHANNELS, ADS manual initiation channels, ATWS manual ADS inhibit channels, *and the ADS Division I/II ECCS Pump Discharge Pressure - High (permissive) channels.*

I.1

This condition assures that appropriate compensatory measures are taken for conditions of:

- *two divisions with one or more inoperable ADS LOGIC CHANNELS*

- ~~*inoperable RCIC isolation SENSOR CHANNELS*~~

- two divisions with *one or more* inoperable *ADS ~~valves with both~~ OUTPUT CHANNELS ~~inoperable~~*

- *two divisions with one or more inoperable* ADS *manual* initiation *channels.*

For ADS, the LOGIC CHANNELS and OUTPUT CHANNELS *cannot be tripped or bypassed so the associated valves must be declared inoperable for these conditions. ~~The RCIC isolation SENSOR CHANNELS are 2/2 in each division which results in loss of automatic initiation in one division for any single channel failure.~~ This condition is also entered if the required Action and associated Completion Time of Condition H is not met~~ (except for ECCS pump discharge pressure permissive)~~.*

This Action applies to the ADS LOGIC CHANNELS, the ADS OUTPUT CHANNELS, the ADS manual channels, and *the ATWS manual ADS Inhibit channels~~, and the RCIC Turbine Exhaust Diaphragm Pressure - High Functions~~.*

BASES

K.1

Action K.1 restores at least three of the required SENSOR CHANNELS for the Function to the OPERABLE status. The completion time of 7 days is based on the low probability of undetected failures in both of the OPERABLE channels for the Function occurring in that time period. The self-test features of the ~~SSLC~~ ELCS*, NMS, and ~~EMS~~* ECF *provide a high degree of confidence that no undetected failure will occur.*

L.1

Action L.1 restores at least two of the required SENSOR CHANNELS for the Function to the OPERABLE status. The completion time of 24 hours is based on the low probability of undetected failures in the remaining OPERABLE channel for the Function occurring in that time period. The self-test features of the ~~SSLC~~ ELCS*, NMS, and ~~EMS~~* ECF *provide a high degree of confidence that no undetected failures will occur.*

M.1

This Action is also invoked if the Completion Times of Actions ~~H,~~ J, K, or L are not met.

SURVEILLANCE REQUIREMENTS

SR 3.3.1.4.4

The tests in the COMPREHENSIVE FUNCTIONAL TEST (CoFT) verify proper ~~SSLC~~ ELCS *system function, computer component function, software and hardware interactions, response times, and error handling. Error statistics, usage statistics, historical statistics, and various other measures are used to verify proper performance of the ~~SSLC~~* ELCS*. Successful completion of these tests establishes OPERABILITY of SENSOR CHANNELS, LOGIC CHANNELS, and OUTPUT CHANNELS.*

The software based ~~SSLC~~ ELCS *system contains many states, not all of which will occur over the life of the plant. The most important states are those that are required to mitigate accidents. Therefore, the CoFT focuses on usage testing, which exercises the overall system by simulating the input conditions under which the system is designed to perform, rather than coverage testing, which attempts to exercise all possible states of the system. Before plant start-up there is a high level of confidence that the ~~SSLC~~* ELCS *system will operate as specified due to the extensive inspections, tests, and analyses conducted during the ITAAC preoperational phases. During the plant operating life, the CoFT assures that the protective action equipment is within its specified performance characteristics.*

BASES

STD DEP 16.3-88
REFERENCES 5. ~~*DCD Tier 2, Section 1.1.3.*~~ "Technical Requirements Manual."

BASES

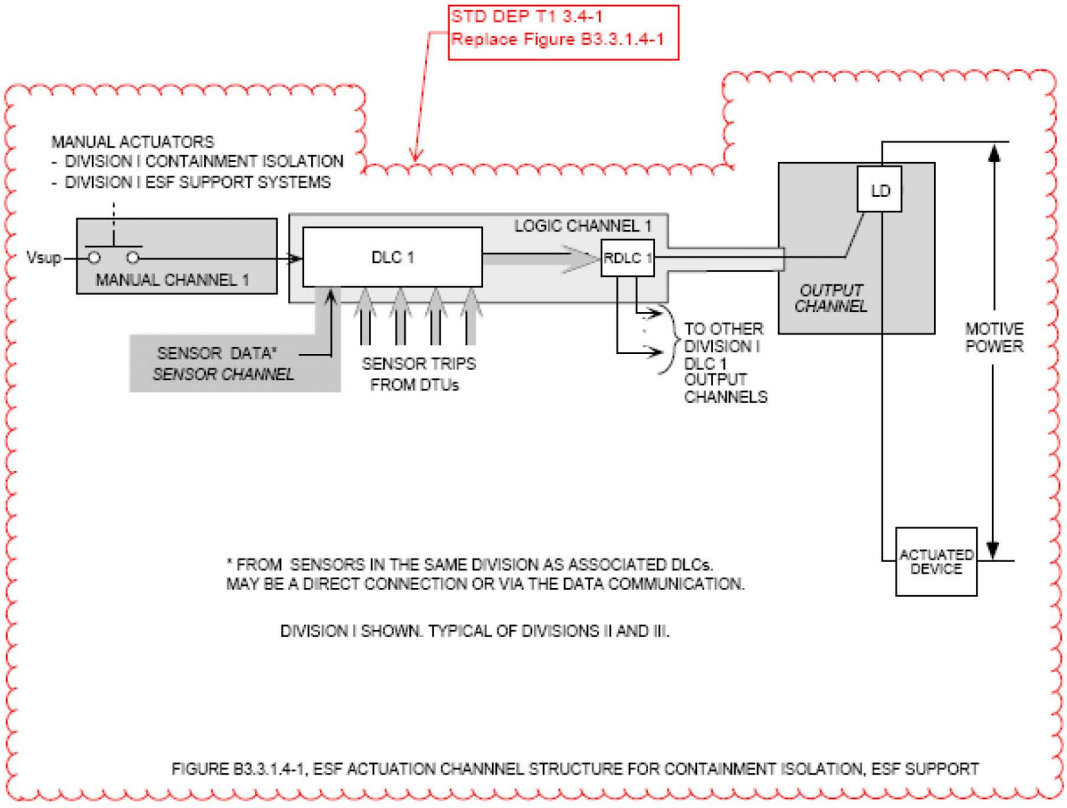

FIGURE B3.3.1.4-1, ESF ACTUATION CHANNNEL STRUCTURE FOR CONTAINMENT ISOLATION, ESF SUPPORT

BASES

STD DEP T1 3.4-1
Replace Figure B3.3.1.4-2

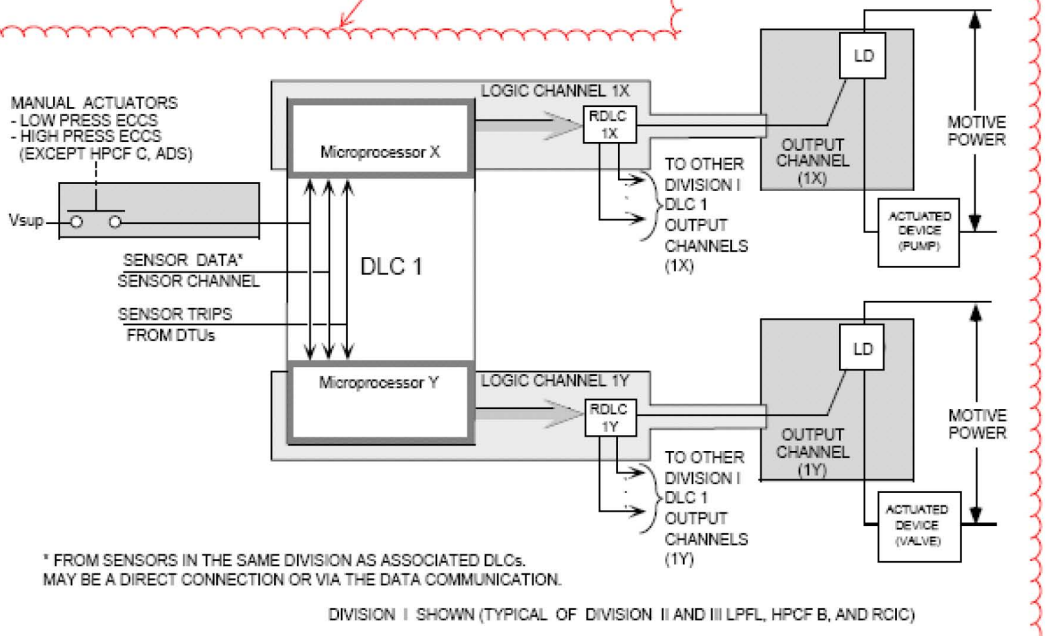

FIGURE B3.3.1.4-2, ESF ACTUATION CHANNEL STRUCTURE FOR LPFL B, C, HPCF B, RCIC

BASES

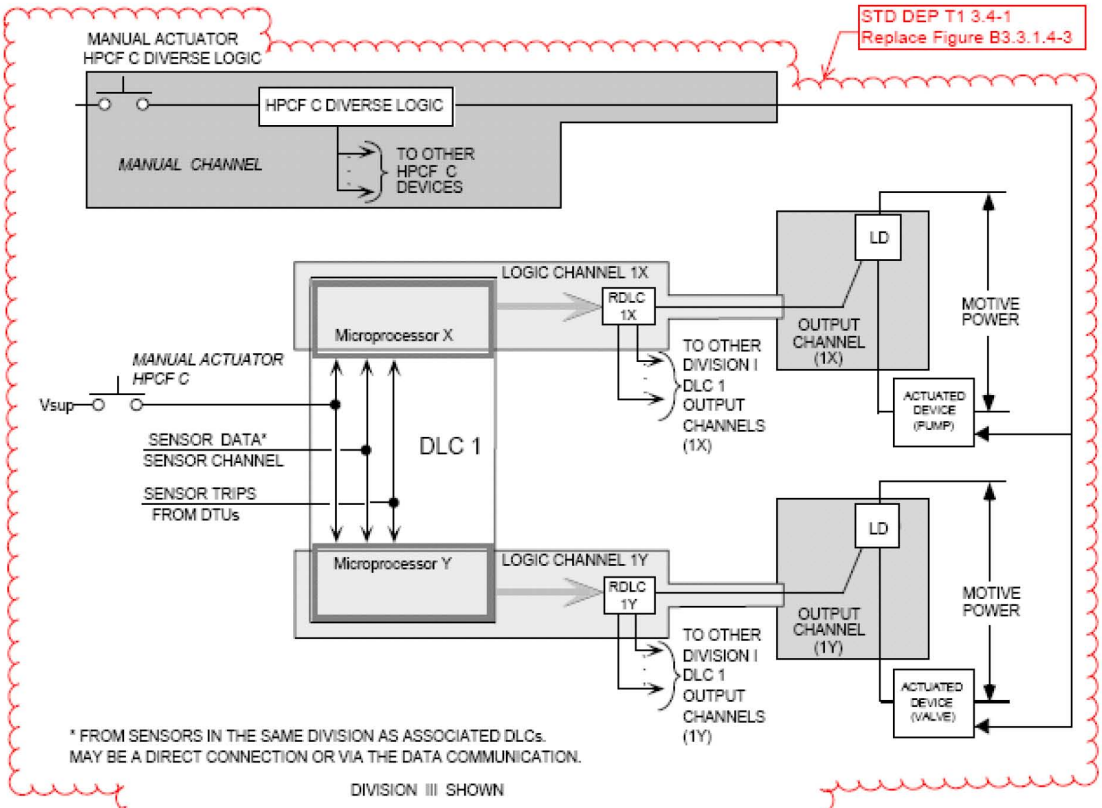

FIGURE B3.3.1.4-3, ESF ACTUATION CHANNEL STRUCTURE FOR HPCF C

BASES

STD DEP T1 3.4-1
Replace Figure B3.3.1.4-4

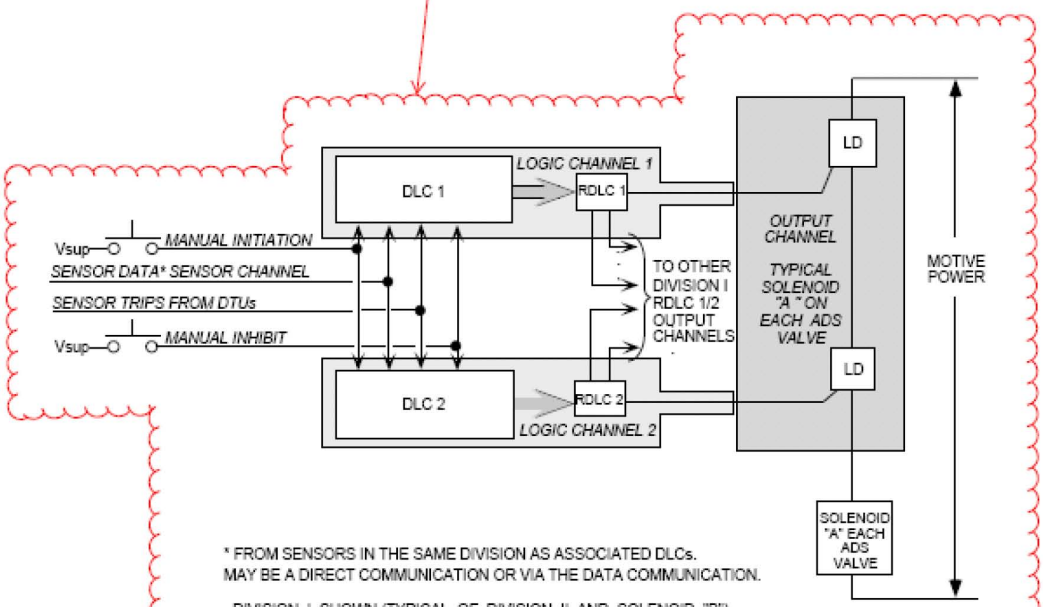

* FROM SENSORS IN THE SAME DIVISION AS ASSOCIATED DLCs.
MAY BE A DIRECT COMMUNICATION OR VIA THE DATA COMMUNICATION.

DIVISION I SHOWN (TYPICAL OF DIVISION II AND SOLENOID "B")

FIGURE B3.3.1.4-4, ESF ACTUATION CHANNEL STRUCTURE FOR ADS

BASES

STD DEP T1 3.4-1
Add Figure B3.3.1.4-5

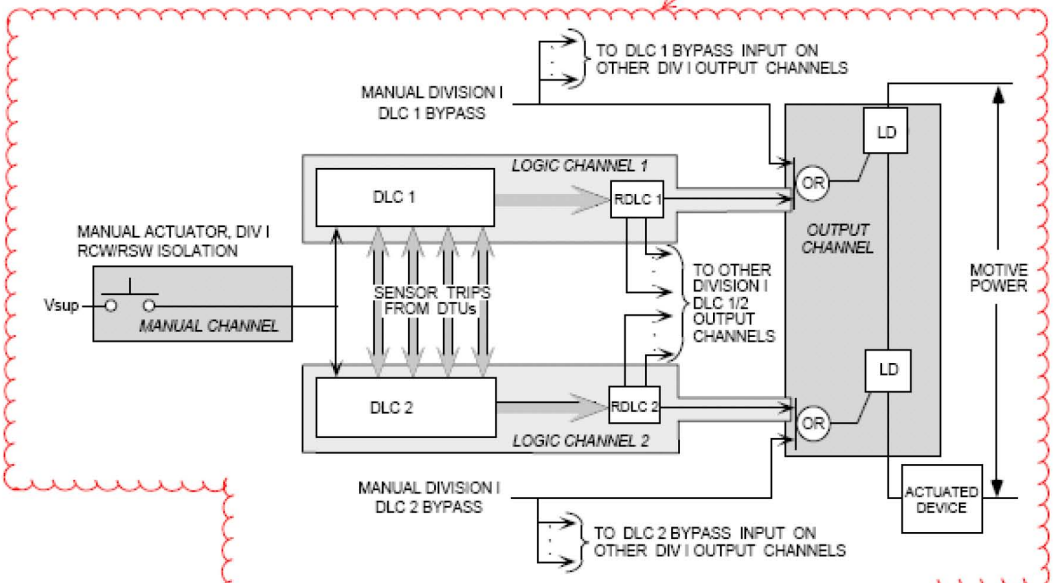

FIGURE B3.3.1.4-5, ESF ACTUATION CHANNEL STRUCTURE FOR RCW/RSW ISOLATION

B 3.3 INSTRUMENTATION

B 3.3.2.1 Startup Range Neutron Monitor (SRNM) Instrumentation

BASES

The information in this section of the reference ABWR DCD, including all subsections, is incorporated by reference with no departures or supplements.

B 3.3 INSTRUMENTATION

B 3.3.3.1 Essential ~~Multiplexing System~~ Communication Function (~~EMS~~ ECF)

BASES

The information in this section of the reference ABWR DCD, including all subsections, is incorporated by reference with the following departure.

STD DEP T1 3.4-1

BACKGROUND

The ~~EMS~~ ECF *is a data collection and data distribution system that provides plant parameter data collection and distribution for use by the safety systems in providing protective action. The ~~EMS~~* ECF *consists of ~~remote multiplexing units (RMU), Control Room Multiplexing units (CMU), and~~* the equipment implementing the ECF (e.g., I/O Units in the Reactor Building and the Main Control Room) *and a segmented dual redundant data transmission path. The transmissions paths are reconfigurable so that most data transmission failures effect only one segment in one of the redundant paths.*

The ~~EMS~~ ECF *is comprised of four independent divisions (Div. I, II, III, IV). ~~Strategically located RMUs gather data from plant sensors, convert it to serial digital data, and~~* The ECF acquires data from remote process sensors and discrete devices located within the plant, and *transmit*s *the data to the Safety System Logic and Control (SSLC) ~~Digital Trip Modules (DTMs), Trip Logic Units (TLU) or Safety Logic Units (SLU)~~* system in the main control room area *over dual redundant optical data transmission paths.* The SSLC processes that data according to required system logic protocols to calculate control signals. *The ~~RMUs also receive data representing the desired actions for controlled devices and delivers it to the appropriate OUTPUT CHANNEL. The OUTPUT CHANNEL converts the data to a signal level suitable for the controlled device.~~* ECF distributes the resulting control signals to the final actuators of the supported systems' driven equipment.

The equipment implementing the *~~EMS~~* ECF features an automatic self-test and automatically accommodates a single failure (e.g., cable break or device failure) within a division without loss of the ECF. The ECF continues normal function after an error is detected with no interruption in data communication. If the equipment implementing the ECF fails, the failed equipment is automatically removed from service. Self-test runs continuously and faults are indicated in the main control room. Loss of communications in an entire division does not cause transient or erroneous data to occur at system outputs, but may cause a loss of ability to control equipment in that division. *~~includes a variety of self-test and monitoring features. The self test checks the health of the microprocessor, RAM, ROM, communications, data transmission segments, and software. A hard failure will activate an alarm and provide fault indication to the board level.~~*

BASES

~~Soft failures (i.e., transient) are logged to provide maintenance information. Reconfiguration status after a segment failure also activates an alarm~~.
The dual redundant data transmission paths within a division *provide communication between ~~the RMUs and CMUs~~* remote process sensors and discrete devices located within the plant, the main control room area SSLC, and final actuators of the supported systems' driven equipment. *The paths are reconfigurable so that communication is maintained as long as there is one OPERABLE path between ~~all pairs of multiplexers~~* the equipment implementing the ECF. *One path between ~~any pair of units~~* the equipment implementing the ECF *is called a "segment" in this LCO.*

A data transmission segment is OPERABLE when communication between ~~a pair of multiplexers~~ equipment implementing the ECF *can occur over the segment. This requires the ~~line drivers and line receivers on both ends~~* equipment implementing the ECF *to be OPERABLE and the path between the ~~units~~* equipment (e.g., segment) *to be OPERABLE. The ~~EMS~~* ECF *must also be capable of providing the specified maximum throughput and the data error rates must be within specified limits for it to be considered OPERABLE.*

APPLICABLE SAFETY ANALYSIS, LCO and APPLICABILITY

Some portion of the ~~EMS~~ ECF *is required to be operable in all MODES since there are one or more safety systems that acquire data from the ~~EMS~~* ECF *in all modes. The applicable safety analysis for the various portions of the ~~EMS~~* ECF *are the analysis that apply to the Functions that acquire data from the ~~EMS~~* ECF. *The signal acquisition and conversion portions of the ~~EMS~~* ECF *are adequately covered by the LCOs for the systems that acquire and/or transmit data over the ~~EMS~~* ECF. *Therefore, this LCO addresses only the data transmission portion of the ~~EMS~~* ECF.

The ~~Essential Multiplexing System (EMS)~~ ECF *does not directly generate any trip functions so there are no specific Allowable Value for the ~~EMS~~* ECF *since the effect of any ~~EMS~~* ECF *processing is included in the allowable values for the Functions in systems that utilize the ~~EMS~~* ECF.

ACTIONS

A Note has been provided to modify the ACTIONS related to ~~EMS~~ ECF. *Section 1.3, Completion Times, specifies that once a Condition has been entered, subsequent trains, subsystems, components, or variables expressed in the Condition, discovered to be inoperable or not within limits, will not result in separate entry into the Condition. Section 1.3 also specifies that Required Actions of the Condition continue to apply for each additional failure, with Completion Times based on initial entry into the Condition. However, the Required Actions for multiple inoperable ~~EMS~~* ECF *data transmission paths provide appropriate compensatory measures. As such, a Note has been provided that allows separate Condition entry for each inoperable ~~EMS~~* ECF *division.*

BASES

A.1

This Condition address the situation where there is some loss of data transmission redundancy in one ~~EMS~~ ECF *division but a complete data transmission path is maintained so the systems serviced by the ~~EMS~~* ECF *can acquire the needed data.*

B.1

This Condition address the situation where there is some loss of data transmission redundancy in more than one ~~EMS~~ ECF *division but complete data transmission paths are maintained in all divisions. The ~~EMS~~* ECF *performs as intended and a single failure will not cause loss of data transmission capability in more than one division.*

This LCO is included to assure that any degradation in data transmission redundancy in more than one ~~EMS~~ ECF *division will be repaired on a reasonable schedule. The Completion Time is based on the specified high reliability of the individual data transmission segments and the limited number of devices involved in each segment. Also, the self test will detect most additional data transmission path failures.*

C.1

If the required action of condition B is not accomplished within the required Completion Time, then additional ~~EMS~~ ECF *monitoring (Action C.1) is required to provide confidence that adequate data transmission capability is maintained. The Completion Times for C.1 are adequate to detect an inoperable ~~EMS~~* ECF *division soon enough so that the impact of any additional failures on plant risk is negligible.*

D.1

When one or more ~~EMS~~ ECF *divisions become inoperable then the Functions and/or Features associated with the ~~EMS~~* ECF *become unavailable. The loss of one or more ~~EMS~~* ECF *data transmission divisions is similar to the loss of multiple SENSOR CHANNELS in LCO 3.3.1.1, "SSLC Sensor Instrumentation" or LOGIC CHANNELS in LCO 3.3.1.2, "RPS and MSIV Actuation", and 3.3.1.4, "ESF Actuation Instrumentation".*

A note is included to exclude this Action from the MODE change restriction of LCO 3.0.4. The ~~EMS~~ ECF *must be OPERABLE in all MODES and other conditions while declaring the Features and Functions associated with the inoperable ~~EMS~~* ECF *division may require entry into a different MODE or other condition.*

BASES

SURVEILLANCE REQUIREMENTS

SR 3.3.3.1.1

The operability of the ~~EMS~~ ECF *data transmission segments should be periodically confirmed to assure that an adequate degree of redundancy is maintained. This SR is included to provide confidence that all data transmission segments are OPERABLE. The test consists of assuring that the two data transmission paths between ~~all connected pairs of multiplexers~~* the equipment implementing the ECF *are OPERABLE. The test assures that the ~~line drivers and line receivers on both ends of each of the redundant paths between the multiplexers~~* equipment implementing the ECF *~~are~~* is *OPERABLE. The test must also assure the ability to reconfigure the data transmission paths. Reconfiguration is accomplished by ~~cross connecting the line drivers and line receivers to~~* interconnecting *the data transmission paths. The inability to reconfigure shall be treated as a loss of a single segment (i.e., Condition A).*

The ~~EMS~~ ECF *data transmission segments are constructed from a few highly reliable devices and the loss of segments while maintaining data transmission integrity does not degrade plant safety. Therefore, a frequency of [92] days is adequate. The ~~EMS~~* ECF *site test will automatically detect most data transmission errors.*

SR 3.3.3.1.2

The 18 month frequency is based on the ABWR expected refueling interval and the need to perform this Surveillance under the conditions that apply during a plant outage to reduce the potential for an unplanned transient if the Surveillance were performed with the reactor at power. The specified high reliability of the devices used in the ~~EMS~~ ECF combined with self tests intended to detect ~~EMS~~ ECF *degradation provide confidence that this frequency is adequate.*

B 3.3 INSTRUMENTATION

B 3.3.4.1 Anticipated Transient Without Scram (ATWS) and End of Cycle Recirculation Pump Trip (EOC-RPT) Instrumentation

BASES

The information in this section of the reference ABWR DCD, including all subsections and figures, is incorporated by reference with the following departures.

STD DEP T1 3.4-1
STD DEP 16.3-38
STD DEP 16.3-55
STD DEP 16.3-56

STD DEP T1 3.4-1

BACKGROUND

The ATWS - ARI Functions are included in the Recirculation Flow Control (RFC) system, the Rod Control and Information System (RCIS), and in a separate ATWS - ARI confirmatory logic device included specifically for ATWS - ARI Functions. The RFC is a triple redundant microprocessor system, the RCIS is a dual redundant microprocessor-based system, and the confirmatory logic device uses hardware (i.e. not microprocessor based) logic. The data needed for the ATWS - ARI recirculation runback Functions is acquired from other systems using suitable isolation. These systems are completely independent of and diverse to the RPS. The data used is:

- *Four independent low Level 2 discrete trip data from the ECCS portion of the ~~SSLC~~* ELCS *to the RFC.*

- *Three independent discrete data representations of reactor pressure from the Steam Bypass and Pressure Control (SB&PC) system to the RFC.*

- *Four ~~independent~~* channels of *scram follow discrete trip data from the ~~ECCS portion of the SSLC~~* Actuators for Scram Air Header Dump Valves *to the RCIS and to the FMCRD Insertion confirmatory logic.*

The RPT Functions are included in the Recirculation Flow Control (RFC) system. The RFC system is a triple redundant microprocessor based system with the data needed by the RPT Functions acquired from other systems using suitable isolation. The data used by the function is:

- *Three independent low Level 3 discrete trip data from the Feedwater Control (FWC) System for the ATWS-RPT.*

- *Four independent low Level 2 discrete trip data from the ECCS portion of the ~~SSLC~~* ELCS *for the ATWS-RPT.*

BASES

- *Three independent data representations of high reactor pressure from the Steam Bypass and Pressure Control (SB&PC) system for the ATWS-RPT.*

- *Four independent composite discrete data values which are a trip state data value when either a Turbine Stop Valve-Closure or Turbine Control Valve Fast Closure, Trip Oil Pressure-Low scram initiation occurs. The data is received from the ~~RPS portion of the SSLC~~ RTIS and is used for the EOC-RPT. The logic for these signals is described in the SSLC Sensor Instrumentation LCO (LCO 3.3.1.1).*

Independent RPT signals are generated in all three RFC subsystems using 2/4 or 2/3 logic, as appropriate. RPT data from all three RFC subsystems are transmitted to the RIP Adjustable Speed Drives (ASD). The ASDs use dual 2/3 logics to implement the trip and include an adjustable delay on the trip actuation signals to the load interrupters.

STD DEP 16.3-38

APPLICABLE SAFETY ANALYSIS, LCO, and APPLICABILITY

1. Feedwater Reactor Vessel Water Level - Low, Level 3

The Feedwater Reactor Vessel Water Level - Low, Level 3 data originates from three level transmitters that sense the difference between the pressure due to a constant column of water (reference leg) and the pressure due to the actual water level (variable leg) in the vessel. Data from the three level transmitters are received by the three FWC controllers ~~via the three plant multiplexing systems~~. Level 3 trip data is generated in the FWC and the voted results from all three FWC controllers ~~is~~ are transmitted to each of the ~~three~~ RFC controllers by three separate signals. The RFC controllers ~~which~~ use 2/3 logic to create RPT data.

STD DEP 16.3-38

Three channel s of the Reactor Vessel Water Level - Low, Level 3 Function are available and required to be OPERABLE when ATWS is required to be OPERABLE to ensure that no single instrument failure can preclude an ATWS-RPT from this Function on a valid signal. This Function is considered to be OPERABLE when ~~a~~ the Level 3 signals originating in each of the feedwater controller channels is received by ~~all~~ the ~~three~~ RFCs. The Allowable Value is the same as given in LCO 3.3.1.1, "SSLC Sensor Instrumentation".

STD DEP T1 3.4-1

2. Reactor Vessel Water Level-Low, Level 2

Reactor Vessel Water Level-Low, Level 2 trip data is received from all four ~~SSLC~~ ELCS divisions by each of the RFC controllers. The ATWS trip logic will generate a trip data value when two of the four are in a tripped state. A trip will occur when needed and spurious trips cannot occur if three of the four Level 2

BASES

data values are valid. The basis for this function is as described in the SSLC Sensor Instrumentation LCO (LCO 3.3.1.1).

STD DEP 16.3-38
STD DEP T1 3.4-1

Four channels of Reactor Vessel Level-Low, Level 2 are available and ~~three~~ are required to be OPERABLE when ATWS is required to be OPERABLE to ensure that no single instrument failure can preclude an ATWS-RPT from this Function on a valid signal. This Function is considered to be OPERABLE when a Level 2 trip signal originating in each of the ~~SSLC~~ ELCS *channels is received by all three of the RFC controllers.*

STD DEP 16.3-38

3. SB&PC Reactor Steam Dome Pressure-High

The SB&PC Reactor Steam Dome Pressure-High data originates from three wide range and three narrow range *pressure transmitters that monitor pressure in the reactor steam dome. Data from the ~~three~~* pressure *transmitters are received by the three SB&P~~R~~C controllers via the ~~three~~ plant ~~multiplexing~~* data communication function *~~systems~~.* Either the three wide range or the three narrow range *~~D~~data values* selected within the SB&PC controllers *~~for all three sensors~~ are received by each of the three RFC controllers which use 2/3 logic to create ATWS-RPT data.*

STD DEP T1 3.4-1

4. EOC-RPT Initiation.

The EOC-RPT initiation signal is a composite signal received from the ~~SSLC~~ RTIS*. The allowable values, applicable safety analysis, and applicability of this Function is as described in the SSLC Sensor Instrumentation LCO (LCO 3.3.1.1) for the Turbine Stop Valve-Closure and Turbine Control Valve Fast Closure, Trip Oil Pressure-Low Functions.*

STD DEP 16.3-38

Four channels of Turbine Steam Flow Rapid Shutoff EOC-RPT are available and ~~three~~ are required to be OPERABLE to provide confidence that no single instrument failure can preclude an EOC-RPT from this Function on a valid signal. This Function is considered to be OPERABLE when an EOC-RPT trip signal originating in each of the four ~~SSLC~~ RTIS *division channels is received by all three of the RFC controllers.*

STD DEP 16.3-38

BASES

6. Adjustable Speed Drive Pump Trip Actuation

The trip actuation devices in the ASD are required to be operable in order to complete the RIP trip Function. Each ASD uses signals from the RPT Function in all three of the RFC controllers. A trip condition from any two of the controllers will cause a trip of the associated RIP. ~~Three~~ One *channel~~s~~ of pump trip actuation per ASD must be OPERABLE when ATWS mitigation or EOC-RPT is required to be OPERABLE~~ to provide confidence that no single instrument failure can preclude an~~* ~~RPT from this Function on a valid signal~~*.*

STD DEP 16.3-38

7 & 8. Adjustable Speed Drive Pump Trip Timers & Load Interrupters

~~*The*~~ For Reactor Internal Pumps C, G, and K, the *ASDs provide timers to cause a small delay before interrupting the devices that provide power to the RIPs. One timer channel and load ~~driver~~* interrupter *in each ASD* (for RIPs C, G, and K) *is available and required to be OPERABLE when ATWS mitigation or EOC-RPT is required to be OPERABLE. The Allowable Values are chosen to cause a trip of the pumps in a timely fashion while minimizing the effects of the transients caused by the pump trips.*

STD DEP 16.3-38

9. RPS Scram Follow Signal

Both of the RCIS systems and the confirmatory logic receive scram follow data from the ~~RPS portion of all four SSLC divisions~~ Actuators for Scram Air Header Dump Valves*. The ATWS-ARI trip logic will generate a trip data value when 2 of the four are in a tripped state. A trip will occur when needed and spurious trips cannot occur if three of the four data values are valid.*

STD DEP T1 3.4-1

Four channels of RPS Scram Follow Signal are required to be OPERABLE when ATWS mitigation is required to be OPERABLE to ensure that no single instrument failure can preclude an ATWS-ARI from this Function on a valid signal. A channel of this Function is considered to be OPERABLE when a scram follow signal originating in each of the four ~~SSLC divisions~~ Actuators for Scram Air Header Dump Valves *is received by each RCIS system and the FMCRD Insertion Confirmatory Logic.*

STD DEP 16.3-38

11. ATWS-ARI Trip Initiation Function of the RFC.

The RFC must transmit ATWS-ARI initiation data to the RCIS and the FMCRD Insertion Confirmatory Logic. Three channels of this Function are required to be OPERABLE when ATWS mitigation is required to be OPERABLE to provide confidence that no single instrument failure can preclude an ATWS-ARI initiation from this Function on a valid signal. A channel of this Function is considered to be OPERABLE when ~~an~~ the *ATWS-ARI initiation signal*s *originating in each of*

BASES

the three RFCs is received by each RCIS system and the FMCRD Insertion Confirmatory Logic.

STD DEP 16.3-38

14. ATWS-ARI Valve Actuation

The RFC sends Actuation signals to Alternate Rod Insertion (ARI) valves that are intended to cause control rod insertion from the hydraulic drives. All three RFC channels send data to separate 2-out-of-3 voters in *both* divisions *of the ARI ~~valves~~. The* ARI *valves will open when Actuation signals are received from 2 of the 3 of the RFC channels* in either division (i.e., a valve actuation signal is sent from the voter for valve actuation in the associated division). *~~Three~~* Two *channels of valve actuation must be OPERABLE* (one channel in each division of ARI) *when ATWS mitigation is required to be OPERABLE to provide confidence that no single instrument failure can preclude an ATWS-ARI valve actuation on a valid signal.*

STD DEP 16.3-38

16. Recirculation Runback

This Function is provided to assure that fuel thermal limits are not exceeded for an inadvertent FMCRD run-in which could occur from failure in the FMCRD ATWS Logic.

Each RIP ASD receives a runback signal from both of the RCIS channels. The RIP will go to its minimum speed when a trip signal is received ~~on both~~ from the *RCIS ~~channels~~. ~~Two~~* One *channel~~s~~ of runback for each RIP ASD ~~are~~* is *required to be OPERABLE when ATWS is required to be OPERABLE.*

ACTIONS

A.1~~.1, A.1.2.1, A.1.2.2, and A.2~~

STD DEP 16.3-38

~~These actions~~ This Action *assures that appropriate compensatory measures are taken when one channel of a Function that uses 2 out of 3 logic is inoperable. For these Functions, a failure in one channel could cause the initiation logic to become 2/2.*

In addition, for Function 14, this action assures that appropriate compensatory measures are taken for this Function. A failure in one channel will cause the initiation logic to become 1/1.

~~Action A.1.1 bypasses the inoperable channel which causes the logic to become 2/2 so the single failure criteria is not met. Therefore, operation in this condition is permitted only for a limited time.~~ Action A.1~~.2.1~~ restores the inoperable channel. ~~Action A.1.2.2 requires the channel to be tripped if repairs are not made within the allowable Completion Time of Action A.1.2.1. Either of the Actions A.1.2.1 or A.1.2.2 provides adequate plant protection capability so no further action is required.~~

BASES

~~*Action A.2 forces a trip condition in the inoperable channel which causes the initiation logic to become 1/2 for the Function. In this condition a single additional failure will not result in loss of protection and the availability of the Function to provide a plant protective action is adequate so no further action is required when the inoperable channel is placed in trip.*~~

~~*The Completion Time of six hours for implementing Actions A.1.1 and A.2 is based on providing sufficient time for the operator to determine which of the actions is appropriate. The Completion Time is acceptable because the probability of an event requiring the Function, coupled with a failure that would defeat the other channels associated with the Function, occurring within that time period is quite low. The self-test features of the logic provide a high degree of confidence that no undetected failures will occur within the allowable Completion Time.*~~

~~*Implementing Action A.1.1 causes the logic to be 2/2 so protective action capability is maintained as long as the other channels remain OPERABLE.*~~ *Operation in this condition is restricted to 14 days* ~~*(Actions A.1.2.1 and A.1.2.2 Completion Time)*~~*. The probability of an event requiring the Function, combined with an undetected failure in a second channel of the Function, in the Completion Time is quite low. The self-test features of the logic provide a high degree of confidence that no undetected failures will occur within the allowable Completion Time.*

B.1 and B.2

STD DEP 16.3-38

These Actions are ~~*Required Action B.1 is*~~ *intended to ensure that appropriate actions are taken if multiple, inoperable*~~*, untripped*~~ *channels within the same Function* ~~*that use 2/3 logic*~~ *results in the Function not maintaining trip capability. A Function is considered to be maintaining trip capability when sufficient channels are OPERABLE or in trip such that the logic will generate a trip signal from the given Function on a valid signal.*

The 72 hour Completion Time to restore ~~*two*~~ all but one *channel*~~*s*~~ for the same Function *is sufficient for the operator to take corrective action and takes into account the likelihood of an event requiring actuation of the ATWS and EOC-RPT instrumentation during this period. Completion of Required Action B.1 places the system in the same state as in Condition A.*

C.1.1, C.1.2.1, and C.1.2.2 and C.2

STD DEP 16.3-38

BASES

Implementing Action C.~~2.1~~1.2 provides confidence that Plant protection is maintained (2/3 logic) for an additional single instrument failure. However, with division I or III in bypass, a loss of the division II power supply could disable two of the remaining channels. Therefore, operation with one division in bypass is restricted to 30 days (Actions C.~~2~~1.2.1 and C.~~2~~1.2.2 Completion Time).

D.1

STD DEP 16.3-38

This action assures that appropriate compensatory measures are taken when one channel for Function 9 is inoperable. For this Function, a failure in one channel will cause the actuation logic to become 2/3 depending upon the nature of the failure (i.e., failure which causes a channel trip versus a failure which does not cause a channel trip). Therefore, an additional failure will not result in a loss of protection. Since the plant protection capability is within the design basis no further action is required.

The Completion Time of 30 days is acceptable because the probability of an event requiring the Function, coupled with failures that would defeat two other channels associated with the Function, occurring within that time period is quite low.

E.1

STD DEP 16.3-38

Required Action ~~D~~E.1 is intended to ensure that appropriate actions are taken when two channels become inoperable for a Function that utilizes 2/4 logic. For this Condition the initiating logic becomes 2/2.

The 72 hour Completion Time to restore one of the inoperable channels is sufficient for the operator to take corrective action and takes into account the low likelihood of an event requiring actuation of the ATWS or EOC-RPT instrumentation during this period. Completion of Required Action ~~D~~E.1 places the system in the same state as in Condition C.

~~E~~ F .1

STD DEP 16.3-38

Required Action ~~E~~F.1 is intended to ensure that appropriate actions are taken when three or four channels become inoperable for a Function that utilizes 2/4 logic. For this Condition initiation from the Function is unavailable.

The 24 hour Completion Time to restore one of the inoperable channels is sufficient for the operator to take corrective action and takes into account the low likelihood of an event requiring actuation of the ATWS or EOC-RPT

BASES

instrumentation during this period. Completion of Required Action ~~E~~F.1 places the system in the same state as in Condition ~~D~~E.

~~F~~ G *.1 and ~~F~~* G *.2*

STD DEP 16.3-38

Required Action ~~F~~G.1 is intended to ensure that appropriate actions are taken for if the required Actions and associated Completion Times for the EOC-RPT Functions are not met. Required Action ~~F~~G.1 requires the MCPR limit for inoperable EOC-RPT, as specified in the COLR, to be applied, which restores the MCPR margin to within the limits assumed in the safety analysis.

~~G~~ H *.1*

STD DEP 16.3-38

This required Action assures that appropriate compensatory measures are taken for inoperable channels in Functions with one or two channels.

Because of the low probability of an event requiring these Functions, [24] hours is provided to restore the inoperable functions.

STD DEP 16.3-38

H I *.1 and H* I *.2*

With any Required Action and associated Completion Time not met, the plant must be brought to a condition where trip actuation is not required or *MO~~O~~DE or other specified condition in which the LCO does not apply. To achieve this status:*

- *~~the trip or runback capability of~~ the associated RIP must be ~~declared inoperable~~*removed from service *(Action ~~H~~I.1) for the ASD and runback actuation Functions.*

- *the plant must be brought to at least MODE 3 for Functions associated with ATWS (required Action ~~H~~I.2)*

The allowed Completion Time for Action ~~H~~I.2 is reasonable, based on operating experience to reach the specified conditions from full power in an orderly manner and without challenging plant systems.

SURVEILLANCE *SR 3.3.4.1.5*

BASES

REQUIREMENTS

STD DEP 16.3-55

This SR ensures that the individual channel response times are less than or equal to the maximum values assumed in the accident analysis. The ~~EOC~~ RPT SYSTEM RESPONSE TIME acceptance criteria are included in Reference 5.

STD DEP 16.3-56

REFERENCES

5. ~~*DCD Tier 2, Section 1.1.3*~~ "Technical Requirements Manual."

BASES

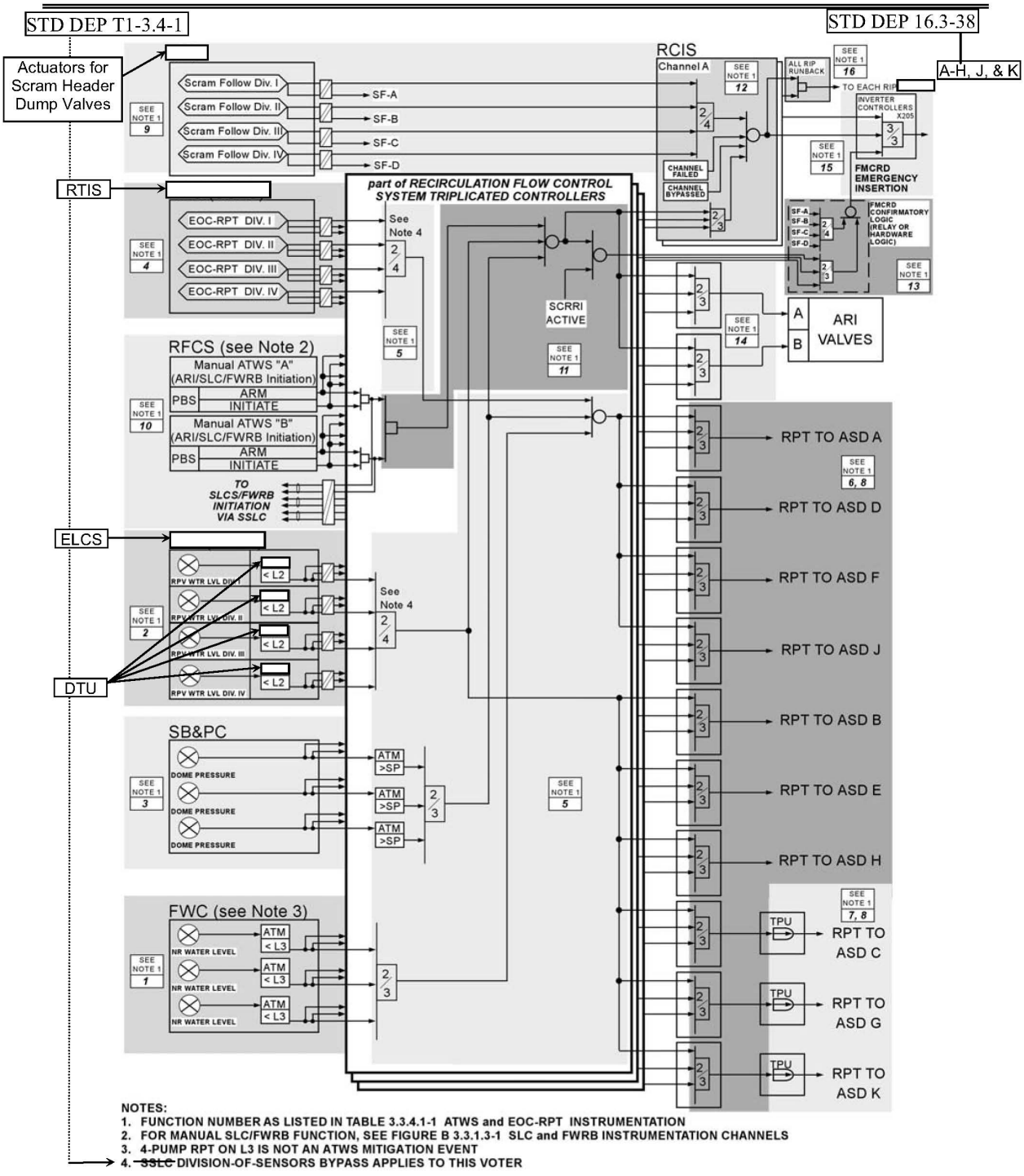

Figure B 3.3.4.1-1, ATWS and EOC-RPT INSTRUMENTATION CHANNELS

B 3.3 INSTRUMENTATION

B 3.3.4.2 Feedwater Pump and Main Turbine Trip Instrumentation

BASES

The information in this section of the reference ABWR DCD, including all subsections and figures, is incorporated by reference with the following departure.

STD DEP 16.3-39
STP DEP 10.4-5

BACKGROUND

The feedwater pump *and main turbine trip instrumentation is designed to detect a potential failure of the Feedwater Level Control System that causes excessive feedwater flow*

With excessive feedwater flow, the water level in the reactor vessel rises toward the high water level, Level 8 reference point, causing the trip of the ~~two~~ four *feedwater pump adjustable speed drives (ASDs) and the main turbine.*

Reactor Vessel Water Level – High, Level 8 signals are provided by level sensors that sense the difference between the pressure due to a constant column of water (reference leg) and the pressure due to the actual water level in the reactor vessel (variable leg). Three channels of Reactor Vessel Water Level – High, Level 8 instrumentation provide input to a two-out-of-three initiation logic that trips the ~~two~~ four *feedwater pump ASDs and the main turbine. The channels include electronic equipment (e.g., digital trip logic) that compares measured input signals with pre-established setpoints. When the setpoint is exceeded, the channel outputs a trip signal, which then outputs a main turbine and feedwater pump ASD trip signal to the trip logic.*

When reactor water level reaches the Level 8 trip setpoint, the Feedwater Control System (FWCS) sends a trip signal to the Turbine Control System to trip the turbine generator, and trip signals to the Condensate, Feedwater and Condensate Air Extraction (CF&CAE) System to trip all feed pumps and close the main feedwater discharge and feed pump bypass valves. This action is initiated to protect the turbine from damage from high moisture content in the steam caused by excessive carryover while preventing water level from rising any higher. The action also prevents over pressurization of the vessel by isolating the condensate pumps from the vessel. The feedwater and turbine generator trips are implemented by a fault tolerant digital controller (FTDC) that is independent of the FTDC that performs the level control function.

The feedwater pump and main turbine trip FTDC system is a triple redundant microprocessor based system. Three narrow range water level instrumentation channels provide one signal per sensor to each of the FTDC controllers. A "validated" level signal is generated within the FTDC and provided as input to a high level trip module where it is compared to the high level trip setpoint value. If the validated level signal exceeds the setpoint value, a high water level trip signal is generated.

BASES

The trip modules send a trip signal to termination modules for each feedwater pump and main turbine. The termination module consists of dual 2-out-of-3 logics (voters) for each feedwater pump and the main turbine control system. Trip actuation of the associated feedwater pump adjustable speed drive (ASD) or the main turbine control system is initiated on two high water level inputs to either of the dual logics. OPERABILITY of the termination module requires only one of the two voters to be OPERABLE.

APPLICABLE SAFETY ANALYSES

The feedwater pump *and main turbine trip instrumentation is assumed to be capable of providing a* feedwater pump and main *turbine trip in the design basis transient analysis for a feedwater controller failure, maximum demand event (Ref. 1). The Level 8 trip indirectly initiates a reactor scram and EOC-RPT from the main turbine trip (above 40% RTP) and trips the feedwater pumps, thereby terminating the event. The reactor scram EOC-RPT mitigates the reduction in MCPR.*

LCO

The LCO requires three ~~channels of the Reactor Vessel Water Level High, Level 8~~ instrumentation channels, three digital controllers, and two termination modules for each operating feedwater pump and the main turbine *to be OPERABLE to ensure that no single instrument failure will prevent the feedwater pump ASDs and main turbine trip on a valid Level 8 signal. Two of the three ~~channels~~* digital controller trip modules *are needed to provide trip signals in order for the feedwater and main turbine trips to occur.*

APPLICABILITY

The feedwater pump *and main turbine trip instrumentation is required to be OPERABLE at ≥ 25% RTP to ensure that the fuel cladding integrity Safety Limit and the cladding 1% plastic strain limit are not violated during the feedwater controller failure, maximum demand event.*

ACTIONS

A note has been provided to modify the ACTIONS related to the *feedwater* pump *and main turbine trip instrumentation~~ channels~~. Section 1.3, Completion Times, specifies that once a Condition has been entered, subsequent trains, subsystems, components, or variables expressed in the Condition, discovered to be inoperable or not within limits, will not result in separate entry into the Condition. Section 1.3 also specifies that Required Actions of the Condition continue to apply for each additional failure, with Completion Times based on initial entry into the Condition. However, the Required Actions for inoperable feedwater and main turbine trip instrumentation channels provide appropriate compensatory measures for separate inoperable channels. As such, a Note has been provided that allows separate Condition entry for each inoperable ~~feedwater and main turbine trip~~ instrumentation channel*, digital controller, or termination module.

BASES

~~A.1, A.2.2, A.2.2.1, and A.2.2.2~~

*Thi~~ese~~ action~~s~~ assures that appropriate compensatory measures are taken when a*n instrumentation *channel is inoperable. ~~A failure in one channel will cause the actuation logic to become 2/2~~.* The detection of a failure of one instrumentation channel results in the validated water level being based upon the other two OPERABLE instrumentation channels.

Action A.1 restores the inoperable channel to OPERABLE status. *~~forces a trip condition in the inoperable channel which causes the initiation logic to become 1/2. In this condition a single additional failure will not result in loss of protection and the availability to provide a plant protective action is adequate so no further action is required when the inoperable channel is placed in trip.~~*

~~Action A.2.1 bypasses the inoperable channel which causes the logic to become 2/2. Since overall redundancy is reduced, operation in this condition is permitted only for a limited time. Action A.2.2.1 restores the inoperable channel. Action A.2.2.2 repeats Action A.1 if repairs are not made within the allowable Completion Time of Action A.2.2.1. Either of the Actions A.2.2.1 or A.2.2.2 provides adequate plant protection capability so no further action is required.~~

~~The Completion Time of six hours for implementing Actions A.1 and A.2.1 is based on providing sufficient time for the operator to determine which action is appropriate. The Completion Time is acceptable because the probability of an event coupled with a failure that would defeat another channel occurring within the time period is low. The self-test features of the main turbine and feedpump trip logic provide a high degree of confidence that no undetected failures will occur within the allowable Completion Time.~~

~~Implementing Action A.2.1 causes the logic to be 2/2 so protective action capability is maintained as long as the other channels remain OPERABLE.~~ Operation in this condition is restricted to 14 days ~~(Actions A.2.2.1 and A.2.2.2 Completion Time)~~. The Completion Time is acceptable because the probability of an event coupled with a failure that would defeat another channel occurring within the time period is low. The self-test features of the main turbine and feedpump trip logic provide a high degree of confidence that no undetected failures will occur within the allowable Completion Time.

BASES

B.1

This action assures that appropriate compensatory measures are taken when a digital controller is inoperable. A failure of one channel will cause the actuation logic to become 2/2. Required Action B.1 restores the inoperable channel to OPERABLE status.

Operation in this condition is restricted to 14 days. The Completion Time is acceptable because the probability of an event coupled with a failure that would defeat another channel occurring within the time period is low. The self test features of the main turbine and feedpump trip logic provide a high degree of confidence that no undetected failures will occur within the allowable Completion Time.

~~*B*~~*C.1*

With two or more instrumentation *channels inoperable, the feedwater* pump *and main turbine trip instrumentation cannot perform its design function (feedwater* pump *and main turbine trip capability is not maintained). Therefore, continued operation is only permitted for a 72 hour period, during which feedwater* pump *and main turbine trip capability must be restored.* ~~*The trip capability is considered maintained when sufficient channels are OPERABLE or in trip such that the feedwater and main turbine trip logic will generate a trip on a valid signal.*~~ *This requires two channels to be* restored to *OPERABLE* status~~*or in trip*~~*. If the required channels cannot be restored to OPERABLE status or placed in trip, Condition* ~~*C*~~F *must be entered and its Required Action taken.*

D.1

With two or more digital controllers inoperable, the feedwater pump and main turbine trip instrumentation cannot perform its design function (feedwater and main turbine trip capability is not maintained). Therefore, continued operation is only permitted for a 72 hour period, during which feedwater and main turbine trip capability must be restored. This requires two controllers to be OPERABLE. If the required controllers cannot be restored to OPERABLE status, Condition F must be entered and its Required Action taken.

The 72 hour Completion Time is sufficient for the operator to take corrective action, and takes into account the likelihood of an event requiring actuation of feedwater and main turbine trip instrumentation occurring during this period and the specified reliability of the triplicated fault-tolerant digital control system for the feedwater control.

BASES

E.1

With one or more termination modules inoperable, the feedwater pump and main turbine trip instrumentation cannot perform its design function (feedwater and main turbine trip capability is not maintained). Therefore, continued operation is only permitted for a 72 hour period, during which feedwater and main turbine trip capability must be restored. If the termination module cannot be restored to OPERABLE, Condition F must be entered and its Required Action taken.

The 72 hour Completion Time is sufficient for the operator to take corrective action, and takes into account the likelihood of an event requiring actuation of feedwater and main turbine trip instrumentation occurring during this period and the specified reliability of the triplicated fault-tolerant digital control system for the feedwater control.

~~C~~F.*1*

With the required channels not restored to OPERABLE status ~~or placed in trip~~, THERMAL POWER must be reduced to < 25% RTP within 4 hours. As discussed in the Applicability section of the Bases, operation below 25% RTP results in sufficient margin to the required limits, and the feedwater pump *and main turbine trip instrumentation is not required to protect fuel integrity during the feedwater controller failure, maximum demand event.*

SURVEILLANCE REQUIREMENTS

SR 3.3.4.2.1

Performance of the ~~SENSOR~~ CHANNEL CHECK once every 24 hours ensures that a gross failure of instrumentation has not occurred. A ~~SENSOR~~ CHANNEL CHECK is a comparison of the parameter indicated on one channel to a similar parameter on other channels. It is based on the assumption that instrument channels monitoring the same parameter should read approximately the same value. Significant deviations between instrument channels could be an indication of excessive instrument drift in one of the channels, or something even more serious. A ~~SENSOR~~ CHANNEL CHECK will detect gross channel failure; thus, it is key to verifying the instrumentation continues to operate properly between each CHANNEL FUNCTIONAL TEST.

Agreement criteria are determined by the plant staff based on a combination of the channel instrument uncertainties, including indication and readability. If a channel is outside the match criteria, it may be an indication that the instrument has drifted outside its limits.

The Frequency is based on operating experience that demonstrates channel failure is rare. Performance of the ~~SENSOR~~ CHANNEL CHECK guarantees that undetected outright channel failure is limited to 24 hours. The CHANNEL

BASES

CHECK supplements less formal, but more frequent, checks of channel status during normal operational use of the displays associated with the channels required by the LCO.

SR 3.3.4.2.2

A CHANNEL FUNCTIONAL TEST is performed on each required channel to ensure that the entire channel will perform the intended function. If the as found setpoint is not within its required Allowable Value, the plant specific setpoint methodology may be revised, as appropriate, if the history and all other pertinent information indicate a need for the revision. The setpoint shall be left set consistent with the assumptions of the current plant specific setpoint methodology.

The Frequency of [92] days is based on the system capability to automatically perform self-tests and diagnostics.

The Surveillance is modified by a Note to indicate that when the channel functional test is performed, entry into associated Conditions and Required Actions may be delayed for up to 2 hours. This Note is acceptable because when performing this test the trip module outputs are blocked so that the feedwater pumps and main turbine are not tripped.

SR 3.3.4.2.3

~~*SENSOR*~~ *CHANNEL CALIBRATION is a complete check of the instrument loop and the sensor. This test verifies the channel responds to the measured parameter within the necessary range and accuracy.* ~~*SENSOR*~~ *CHANNEL CALIBRATION leaves the channel adjusted to account for instrument drifts between successive calibrations. Measurement and setpoint error historical determinations must be performed consistent with the plant specific setpoint methodology. The channel shall be left calibrated consistent with the assumptions of the setpoint methodology.*

SR 3.3.4.2.4

The LOGIC SYSTEM FUNCTIONAL TEST demonstrates the OPERABILITY of the required trip logic for each feedwater pump and main turbine~~*a specific channel*~~*.*

B 3.3 INSTRUMENTATION

B 3.3.5.1 Control Rod Block Instrumentation

BASES

The information in this section of the reference ABWR DCD, including all subsections, is incorporated by reference with the following departures.

STD DEP T1 3.4-1
STD DEP 16.3-66
STD DEP 16.3-67

STD DEP T1 3.4-1

BACKGROUND

The ATLM and RWM are subsystems of the Rod Control and Information System (RCIS). The RCIS is a non-safety system (category 3) but is made up of dual redundant channels to assure high availability. Both channels independently acquire all of the required data and perform identical functions. The RCIS functions are implemented on microprocessors with a high degree of segmentation within the system. The data needed by the RCIS is acquired from the ~~Essential Multiplexing System~~ Essential Communication Function (ECF) *with suitable isolators, the RCIS ~~multiplexing system~~* Data Communication Function (DCF)*, or the ~~Non-Essential Multiplexing System~~* Plant Data Network (PDN)*. The rod block logic is arranged so that a rod block from either channel will prevent rod withdrawal.*

The thermal limits information calculated in the ~~process~~ plant *computer is based on various process parameters ~~measured acquired by the process computer~~.*

STD DEP 16.3-66

APPLICABLE SAFETY ANALYSIS, LCO, and APPLICABILITY

2. Reactor Mode Switch – Shutdown Position

~~Three~~ Four *channels are required to be OPERABLE to ensure that no single channel failure will preclude a rod block when required.*

STD DEP 16.3-67

ACTIONS

E.1 and E.2

If there are failures ~~in~~ of the Reactor Mode Switch – Shutdown Position Function the plant must be placed in a condition where the LCO does not apply. This is accomplished by suspending all control rod withdrawal immediately (Action E.1), and initiating ~~to fully inserting~~ full insertion of *all insertable control rods in core cells containing one or more fuel assemblies (Action E.2).*

B 3.3 INSTRUMENTATION

B 3.3.6.1 Post Accident Monitoring (PAM) Instrumentation

BASES

The information in this section of the reference ABWR DCD, including all subsections, is incorporated by reference with the following departures and site specific supplement. The site-specific supplement partially addresses COL License Information Item 16.1.

STD DEP T1 2.3.1
STD DEP T1 2.14-1
STD DEP T1 3.4-1
STD DEP 7.5-1
STD DEP 16.3-77
STD DEP 16.3-78

The design departure describing the elimination of hydrogen recombiners from the certified design was provided in ABWR Licensing Topical Report (LTR) NEDE-33330P, "Advanced Boiling Water Reactor (ABWR) Hydrogen Recombiner Requirements Elimination," May 2007. The information on pages C-115, C-116, C-117 and C-212 is incorporated by reference.

STD DEP T1 3.4-1

LCO *Listed below is a discussion of each of the specified instrument Functions listed in Table 3.3.6.1-1. Data for most of the display Functions are transmitted to the operator displays via the four divisions of the Essential* Communication Function (ECF) ~~*Multiplexer System (EMS)*~~. *Exceptions are noted in the following discussions for each Function.*

STD DEP 16.3-77

LCO *4. Suppression Pool Water Level*

Suppression pool water level is a Category I variable provided to detect a breach in the reactor coolant pressure boundary (RCPB). This variable is also used to verify and provide long term surveillance of ECCS function. ~~*The wide range s*~~*Suppression pool water level measurement provides the operator with sufficient information to assess the status of the RCPB and to assess the status of the water supply to the ECCS.* ~~*The wide range water level indicators monitor the suppression pool level from the bottom of the ECCS suction lines to five feet above the normal suppression pool level. Four wide range suppression pool water level signals are transmitted from separate differential pressure transmitters.*~~ Suppression pool water level is monitored by four divisions of narrow range level instrumentation measuring from 0.5 meters above to 0.5 meters below normal water level, and two wide range instruments measuring from the centerline of the ECCS suction piping to the wetwell spargers. *Suppression pool water level is continuously displayed in the control room. These displays are the primary*

BASES

indication used by the operator during an accident. Therefore, the PAM Specification deals specifically with this portion of the instrument channel.

STD DEP 7.5-1

5.a. Drywell Pressure, 5.b. ~~Wide Range Containment~~ Wetwell *Pressure*

Drywell and wetwell *pressure ~~is a~~* are Type A, *Category I variable*s *provided to detect breach of the RCPB and to verify ECCS functions that operate to maintain RCS integrity. Requirements for monitoring of drywell pressure are specified for both narrow range and wide range. The narrow range monitoring requirement is satisfied in the existing essential safety system designs by the four divisions of drywell pressure instruments which provide inputs to the initiation of the Reactor Protection System (RPS) and the Emergency Core Cooling Systems (ECCS).*

The requirement for unambiguous wide range drywell pressure monitoring are satisfied with two channels of drywell *instrumentation and integration with ~~the~~* two channels of *wetwell pressure instrumentation. Given the existence of (1) the normal pressure suppression vent path between the drywell and wetwell and (2) the wetwell to drywell vacuum breakers, the long-term pressure within the drywell and wetwell will be approximately the same. Drywell* and wetwell *pressure signals are transmitted from separate pressure transmitters. Drywell* and wetwell *pressure is continuously displayed in the main control room. These displays are the primary indication used by the operator during an accident. Therefore, the PAM Specification deals specifically with this portion of the instrument channel.*

STD DEP T1 2.14-1

~~*11. and 12. Containment Atmospheric Monitors - Drywell and Wetwell Hydrogen and Oxygen Analyzer*~~

~~*Drywell and wetwell hydrogen and oxygen analyzers are Category I instruments provided to detect high hydrogen or oxygen concentration conditions that represent a potential for containment breach. These parameters are also important in verifying the adequacy of mitigating actions. There are two divisions in the Containment Atmospheric Monitoring System analyzers with one channel of H2 monitoring and one channel of O2 monitoring per division. Samples of either the drywell or wetwell are drawn into the analyzers based on the position of a selector switch in the main control room. Displays and alarms are provided in the main control room. These displays are the primary indication used by the operator during an accident. Therefore, the PAM Specification deals specifically with this portion of the instrument channel.*~~

BASES

STD DEP 16.3-78

~~*13. Containment Water Level.*~~

~~*Containment Water Level displays are Category I instruments provided for early detection of small leaks in the containment and as an alternate to drywell pressure and drywell radiation Functions. There are two channels of Containment Water Level with displays and alarms provided in the main control room. These displays are the primary indication used by the operator during an accident. Therefore, the PAM Specification deals specifically with this portion of the instrument channel.*~~

STD DEP T1 2.14-1
STD DEP 16.3-78

~~*14*~~11. *Suppression Pool Water Temperature*

~~*15*~~12. *Drywell Atmosphere Temperature*

STD DEP T1 2.3-1

~~*16. Main Steam Line Radiation*~~

~~*Main steam line radiation is a Category I variable provided to monitor fuel integrity. Radiation in the main steam line tunnel - which is measured by the process radiation monitoring system - is an indicator of coolant radiation. There are four divisions of main steam tunnel radiation monitoring with a control room display channel from each division. These displays are the primary indication used by the operator during an accident. Therefore, the PAM Specification deals specifically with this portion of the instrument channel.*~~

STD DEP 7.5-1

13. Wetwell Atmosphere Temperature

Wetwell Atmosphere Temperature is a Category I variable provided to monitor wetwell atmospheric temperature. Multiple temperature sensors dispersed throughout the wetwell provide surveillance monitoring of temperatures in the wetwell, such that the required indication of bulk average wetwell atmosphere temperature is satisfied.

B 3.3 INSTRUMENTATION

B 3.3.6.2 Remote Shutdown System

BASES

The information in this section of the reference ABWR DCD, including all subsections, is incorporated by reference with the following departures.

STD DEP T1 2.14-1
STD DEP T1 3.4-1
STD DEP 8.3-1
STD DEP 16.3-59
STD DEP 16.3-60

STD DEP 2.14-1
The design departure describing the elimination of hydrogen recombiners from the certified design was provided in ABWR Licensing Topical Report (LTR) NEDE-33330P, "Advanced Boiling Water Reactor (ABWR) Hydrogen Recombiner Requirements Elimination," May 2007. The information on pages C-119 and C-120 is incorporated by reference.

STD DEP 8.3-1
STD DEP T1 2.14-1

BACKGROUND *The Remote Shutdown System provides the control room operator with sufficient instrumentation and controls to place and maintain the plant in a safe shutdown condition from a location other than the control room. This capability is necessary to protect against the possibility of the control room becoming inaccessible. A safe shutdown condition is defined as MODE 3. With the plant in MODE 3, the High Pressure Core Flooder System, the safety/relief valves, and the Residual Heat Removal System Shutdown Cooling and Suppression Pool Cooling Modes can be used to remove core decay heat and meet all safety requirements. Additional systems assisting in the remote shutdown capability are portions of the Nuclear Boiler System, the Reactor Building Cooling Water System, the Reactor Building Service Water System,* and *the ~~Electrical~~* Medium Voltage *Power Distribution System~~, and the Flammability Control System~~. The long term supply of water for the HPCF and the ability to operate shutdown cooling from outside the control room allow extended operation in MODE 3.*

STD DEP T1 3.4-1

BACKGROUND *The functions needed for remote shutdown control are transferred to the remote shutdown panels using manual switches that disable control of the functions from the main control room and enable control from the remote shutdown panels. Control signals are interrupted by the transfer devices at the hardwired, analog loop. Sensor signals which interface with the remote shutdown system for local display of process variables are continuously powered and available for monitoring at all times. Control signals from the main control room are routed from the Remote* Digital Logic Controllers*~~Multiplexing Units~~ (~~RMUs~~*RDLCs*) to remote shutdown transfer devices, and then to the interfacing system equipment.*

BASES

*Actuation of the transfer switches bypasses the R~~MU~~*DLC*s and connects the control signals directly to the remote shutdown panels.*

STD DEP 16.3-59

LCO *12, and 13. RPV Wide Range/~~Narrow~~* Shutdown *Range Water Level.*

Reactor vessel water level is provided to support monitoring of core cooling, to verify operation of the make up pumps, and is needed for satisfactory operator control of the make up pumps. The wide range water level channels cover the range from the near top of the fuel to near the top of the steam separators. The ~~narrow~~ shutdown *range provides indication from near the bottom of the separators to above the steam lines. RPV level is a necessary parameter for achieving and maintaining the reactor in MODE 3. One channel of each range is provided on each of the RSS panels. Both channels are required to be OPERABLE to provide redundant capability to achieve MODE 3 from both RSS panels.*

STD DEP 16.3-60

LCO *14, 15,* 16 *and ~~16~~*17. *Reactor Building Cooling Water Flow/Controls & Reactor Building Service Water* Strainer Differential Pressure/*Controls.*

These parameters and controls are required to monitor and control the water supply for cooling the equipment needed to achieve MODE 3 and to provide containment heat removal. The Reactor Building Cooling Water controls provided are as given in reference 4 and the Reactor Building Service Water controls provided are as given in reference 5. One channel of each Function is provided on each of the RSS panels. Both channels of each Function are required to be OPERABLE to provide redundant capability to achieve MODE 3 from both RSS panels.

STD DEP 2.14-1 ~~*17. Cooling Water Flow to Flammability Control System.*~~

~~*A control for the FCS B inlet valve is provided on the division II panel only. This control is needed in order for the operator to isolate cooling water flow to FCS. One channel is required to be OPERABLE to assure that MODE 3 can be achieved from the Division II RSS panel.*~~

STD DEP 8.3-1 *21. ~~Electric~~*Medium Voltage *Power Distribution Controls.*

These Functions are provided so the operator can select various AC power sources for the equipment needed to achieve and maintain MODE 3. The ~~Electric~~ Medium Voltage *Power Distribution Controls provided are as given in references 6 and 7. One channel of each Function is provided on each of the RSS panels. Both channels of each Function are required to be OPERABLE to provide redundant capability to achieve MODE 3 from both RSS panels.*

B 3.3 INSTRUMENTATION

B 3.3.7.1 Control Room Habitability Area (CRHA) Emergency Filtration (EF) System Instrumentation

BASES

The information in this section of the reference ABWR DCD, including all subsections, is incorporated by reference with no departures or supplements.

B 3.3 INSTRUMENTATION

B 3.3.8.1 Electric Power Monitoring

BASES

The information in this section of the reference ABWR DCD, including all subsections, is incorporated by reference with the following departure.

STD DEP 16.3-62

ACTIONS

C.1 and C.2

If any Required Action and associated Completion Time of Condition A or *B is not met in MODE 1, 2, or 3, a plant shutdown must be performed. This places the plant in a condition where minimal equipment, powered through the inoperable electric power monitoring assembly(s) (power monitor), is required and ensures that the safety function of the RPS (e.g., scram of control rods) is not required.*

D.1, D.2.1, and D.2.2

If any Required Action and associated Completion Time of Condition A or *B are not met in MODE 4 or 5, with any control rod withdrawn from a core cell containing one or more fuel assemblies or with both isolation valves of a RHR shutdown cooling subsystem open, the operator must immediately initiate action to fully insert all insertable control rods in core cells containing one or more fuel assemblies (Required Action D.1).*

B 3.3 INSTRUMENTATION

B 3.3.8.2 Reactor Coolant Temperature Monitoring

BASES

The information in this section of the reference ABWR DCD, including all subsections, is incorporated by reference with the following departure.

STD DEP 16.3-63

BACKGROUND *The temperature monitoring instrumentation will provide temperature indication and trends to the operator in the main control room during RHR decay heat removal operation. One temperature monitoring* transmitter *for each RHR channel is available to monitor reactor coolant temperature at the inlet to the RHR heat exchanger.*

B 3.4 REACTOR COOLANT SYSTEM

B 3.4.1 Reactor Internal Pumps (RIPs) – Operating

BASES

The information in this section of the reference ABWR DCD, including all subsections, is incorporated by reference with the following departure.

STD DEP 16.3-5

STD DEP 16.3-6

BACKGROUND

The subcooled water enters the bottom of the fuel channels and contacts the fuel cladding, where heat is transferred to the coolant. As it rises, the coolant begins to boil, creating steam voids within the fuel channel that continue until the coolant exits the core. Because of reduced moderation, the steam voiding introduces negative reactivity that must be compensated for to maintain or to increase reactor power. The recirculation flow control allows operators to increase recirculation flow and sweep some of the voids from the fuel channel, overcoming the negative reactivity void effect. Thus, the reason for having variable recirculation flow is to compensate for reactivity effects of boiling over a wide range of power generation (i.e., ~~55~~ 70 to 100% RTP) without having to move control rods and disturb desirable flux patterns.

STD DEP 16.3-5

SURVEILLANCE REQUIREMENTS

SR 3.4.1.1

This SR ensures that the number of ~~OPERABLE~~ operating *RIPs is consistent with the assumptions of the applicable DBA and transient analyses. This surveillance is required to be performed once every 24 hours. Operating experience with previous BWR designs has demonstrated that a 24 hour frequency for this type of surveillance is adequate.*

B 3.4 REACTOR COOLANT SYSTEM (RCS)

B 3.4.2 Safety/Relief Valves (S/RVs)

BASES

The information in this section of the reference ABWR DCD, including all subsections, is incorporated by reference with the following departures and site-specific supplement. The site-specific supplement partially addresses COL License Information Item 16.1.

STD DEP T1 2.1-1

STD DEP 16.3-7

LCO

The S/RV setpoints are established to ensure the ASME Code limit on peak reactor pressure is satisfied. The ASME Code specifications require the lowest safety valve be set at or below vessel design pressure, i.e., 8.62 MPaG and the highest safety valve be set so the total accumulated pressure does not exceed 110% of the design pressure for conditions. The ~~transient~~ overpressurization *evaluation~~s~~ in Reference ~~3 are~~* 2 is *based on these setpoints, but also include*s *the additional uncertainties of ± ~~1~~3% of the nominal setpoint to account for potential setpoint drift to provide an added degree of conservatism.*

ACTIONS

A.1

With the safety function of one required S/RV inoperable, the remaining OPERABLE S/RVs are capable of providing the necessary overpressure protection. ~~[Because of additional design margin, the ASME Code limits for the RCPB can also be satisfied with two S/RVs inoperable.]~~ However, the overall reliability of the pressure relief system is reduced because additional failures in the remaining OPERABLE S/RVs could result in failure to adequately relieve pressure during a limiting event. For this reason, continued operation is permitted for a limited time only.

B 3.4 REACTOR COOLANT SYSTEM (RCS)

B 3.4.3 RCS Operational LEAKAGE

BASES

The information in this section of the reference ABWR DCD, including all subsections, is incorporated by reference with the following departures.

STD DEP 7.3-12

STD DEP 16.3-11

APPLICABLE SAFETY ANALYSES

The allowable RCS operational LEAKAGE limits are based on the predicted and observed leakage in operating plants. The normally expected background LEAKAGE due to equipment design and the detection capability of the instrumentation for determining system LEAKAGE were also considered. The evidence from experiments suggests, for LEAKAGE even greater than the specified unidentified LEAKAGE limits, the probability is small that the imperfection or crack associated with such LEAKAGE would grow rapidly.

STD DEP 7.3-12

STD DEP 16.3-11

The unidentified LEAKAGE flow limit allows time for corrective action before the RCPB could be significantly compromised. ~~[~~The ~~3.785~~19 L/min limit is a small fraction of the calculated flow from a critical crack in the primary system piping (Ref. 6)~~]~~. Crack behavior from experimental programs (Refs. 4 and 5) shows leak rates of ~~tens of thousands liters per second~~ hundreds of liters per minute *will precede crack instability.*

No applicable safety analysis assumes the total LEAKAGE limit. The total LEAKAGE limit considers RCS inventory makeup capability and drywell floor sump capacity.

The low limit on increase in unidentified LEAKAGE assumes a failure mechanism of intergranular stress corrosion cracking (IGSCC) that produces cracks. This flow increase limit is capable of providing an early warning of such deterioration.

RCS operational LEAKAGE satisfies Criterion 2 of the NRC Policy Statement.

BASES

LCO *RCS operational LEAKAGE shall be limited to:*

a. Pressure Boundary LEAKAGE

No pressure boundary LEAKAGE is allowed, being indicative of material degradation. LEAKAGE of this type is unacceptable as the leak itself could cause further deterioration, resulting in higher LEAKAGE. Violation of this LCO could result in continued degradation of the RCPB. LEAKAGE past seals and gaskets is not pressure boundary LEAKAGE.

STD DEP 7.3-12

b. Unidentified LEAKAGE

Unidentified LEAKAGE of ~~3.785~~ 19 L/min is allowed as a reasonable minimum amount that can be detected within a reasonable time. The drywell air monitoring, drywell sump level monitoring, and drywell air cooler condensate flow rate monitoring equipment are used to detect unidentified LEAKAGE. Violation of this LCO could result in continued degradation of the RCPB.

c. Total LEAKAGE

The total LEAKAGE limit is based on a reasonable minimum detectable amount. The limit also accounts for LEAKAGE from known sources (identified LEAKAGE). Violation of this LCO indicates an unexpected amount of LEAKAGE and, therefore, could indicate new or additional degradation in an RCPB component or system.

STD DEP 7.3-12

d. Unidentified LEAKAGE Increase

An unidentified LEAKAGE increase of > 8 L/min within the previous 4 hour period indicates a potential flaw in the RCPB and must be quickly evaluated to determine the source and extent of the LEAKAGE. The increase is measured relative to the steady state value; temporary changes in LEAKAGE rate as a result of transient conditions (e.g., startup) are not considered. As such, the 8 L/min increase limit is only applicable in MODE 1 when operating pressures and temperatures are established. Violation of this LCO could result in continued degradation of the RCPB.

BASES

ACTIONS

A.1

With RCS unidentified or total LEAKAGE greater than the limits, actions must be taken to reduce the leak. Because the LEAKAGE limits are conservatively below the LEAKAGE that would constitute a critical crack size, 4 hours is allowed to reduce the LEAKAGE rates before the reactor must be shut down. If an unidentified LEAKAGE has been identified and quantified, it may be reclassified and considered as identified LEAKAGE. However, the total LEAKAGE limit would remain unchanged. The 4 hour Completion Time is needed to properly verify the source before the reactor must be shut down.

STD DEP 7.3-12

B.1 and B.2

An unidentified LEAKAGE increase of > 8 L/min within a 4 hour period is an indication of a potential flaw in the RCPB and must be quickly evaluated. Although the increase does not necessarily violate the absolute unidentified LEAKAGE limit, certain susceptible components must be determined not to be the source of the LEAKAGE increase within the required Completion Time. For an unidentified LEAKAGE increase greater than required limits, an alternative to reducing LEAKAGE increase to within limits (i.e., reducing the LEAKAGE rate such that the current rate is less than the “8 L/min increase in the previous 4 hours" limit; either by isolating the source or other possible methods) is to evaluate service sensitive type 304 and type 316 austenitic stainless steel piping that is subject to high stress or that contains relatively stagnant or intermittent flow fluids and determine it is not the source of the increased LEAKAGE. This type piping is very susceptible to IGSCC.

The 4 hour Completion Time is reasonable to properly reduce the LEAKAGE increase or verify the source before the reactor must be shut down without unduly jeopardizing plant safety.

~~*B.1 and B.2*~~ C.1 and C.2

If any Required Action and associated Completion Time of Condition A or B *is not met or if pressure boundary LEAKAGE exists, the plant must be brought to a MODE in which the LCO does not apply. To achieve this status, the plant must be brought to MODE 3 within 12 hours and to MODE 4 within 36 hours. The allowed Completion Times are reasonable, based on operating experience, to reach the required plant conditions from full power conditions in an orderly manner and without challenging plant systems.*

BASES

REFERENCES

1. *10 CFR 50.2.*
2. *10 CFR 50.55a(c).*
3. *10 CFR 50, Appendix A, GDC 55.*
4. *GEAP-5620, April 1968.*

STD DEP 16.3-11

5. *NUREG-7~~6~~5/067, October 1975.*
6. ~~*[COL Application for Leak-Before-Break Qualification for Piping Systems*~~ FSAR, Section 5.2.5.5.1.~~]~~
7. *Regulatory Guide 1.45.*
8. *Generic Letter 88-01, Supplement 1.*

B 3.4 REACTOR COOLANT SYSTEM (RCS)

B 3.4.4 RCS Pressure Isolation Valve (PIV) Leakage

BASES

The information in this section of the reference ABWR DCD, including all subsections, is incorporated by reference with no departures or supplements.

B 3.4 REACTOR COOLANT SYSTEM (RCS)

B 3.4.5 RCS Leakage Detection Instrumentation

BASES

The information in this section of the reference ABWR DCD, including all subsections, is incorporated by reference with no departures or supplements.

B 3.4 REACTOR COOLANT SYSTEM (RCS)

B 3.4.6 RCS Specific Activity

BASES

The information in this section of the reference ABWR DCD, including all subsections, is incorporated by reference with no departures or supplements.

B 3.4 REACTOR COOLANT SYSTEM (RCS)

B 3.4.7 Residual Heat Removal (RHR) Shutdown Cooling System-Hot Shutdown

BASES

The information in this section of the reference ABWR DCD, including all subsections, is incorporated by reference with the following departure.

STD DEP 16.3-9

ACTIONS A.1, A.2, and A.3

The required cooling capacity of the alternate method should be ensured by verifying (by calculation or demonstration) its capability to maintain or reduce temperature. Decay heat removal by ambient losses can be considered as contributing to the alternate method capability. Alternate methods that can be used include (but are not limited to) ~~the Spent Fuel Pool Cooling System, or~~ the Reactor Water Cleanup System.

B 3.4 REACTOR COOLANT SYSTEM (RCS)

B 3.4.8 Residual Heat Removal (RHR) Shutdown Cooling System-Cold Shutdown

BASES

The information in this section of the reference ABWR DCD, including all subsections, is incorporated by reference with the following departure.

STD DEP 16.3-9

ACTIONS *A.1*

The required cooling capacity of the alternate method should be ensured by verifying (by calculation or demonstration) its capability to maintain or reduce temperature. Decay heat removal by ambient losses can be considered as contributing to the alternate method capability. Alternate methods that can be used include (but are not limited to) ~~a RHR shutdown cooling subsystem], the Spent Fuel Pool Cooling System or~~ the Reactor Water Cleanup System.

B 3.4 REACTOR COOLANT SYSTEM (RCS)

B 3.4.9 RCS Pressure and Temperature (P/T) Limits

BASES

The information in this section of the reference ABWR DCD, including all subsections, is incorporated by reference with the following departure and site-specific supplements. The site-specific supplements partially address COL License Information Item 16.1.

STD DEP 16.3-8

SR 3.4.9.3 and SR 3.4.9.4 and SR 3.4.9.5

Limits on the reactor vessel flange and head flange temperatures are generally bounded by the other P/T limits during system heatup and cooldown. However, operations approaching MODE 4 and MODE 5 and in MODE 4 with RCS temperature less than or equal to certain specified values require assurance that these temperatures meet the LCO limits.

The flange temperatures must be verified to be above the limits 30 minutes before and while tensioning the vessel head bolting studs to ensure that once the head is tensioned the limits are satisfied. When in MODE 4 with RCS temperature ≤ {27°C}, 30 minute checks of the flange temperatures are required because of the reduced margin to the limits. When in MODE 4 with RCS temperature ≤ {38°C}, monitoring of the flange temperature is required every 12 hours to ensure the temperatures are within the limits specified in the PTLR.

STD DEP 16.3-8

REFERENCES

1. *10 CFR 50, Appendix G.*
2. *ASME, Boiler and Pressure Vessel Code, Section III, Appendix G.*
3. *ASTM E 185-82, July 1982.*
4. *10 CFR 50, Appendix H.*
5. *Regulatory Guide 1.99, Revision 2, May 1988.*
6. *ASME, Boiler and Pressure Vessel Code, Section XI, Appendix E.*
7. [~~*NEDO-21778-A, December 1978*~~ ABWR P/T Limit Methodology.]

B 3.4 REACTOR COOLANT SYSTEM (RCS)

B 3.4.10 Reactor Steam Dome Pressure

BASES

The information in this section of the reference ABWR DCD, including all subsections, is incorporated by reference with no departures or supplements.

B 3.5 EMERGENCY CORE COOLING SYSTEMS (ECCS)

B 3.5.1 ECCS-Operating

BASES

The information in this section of the reference ABWR DCD, including all subsections, is incorporated by reference with the following departure.

STD DEP 16.3-10

BACKGROUND

The HPCF System is comprised of two separate subsystems. Each HPCF subsystem (Ref. 1) consists of a single motor driven pump, a flooder sparger above the core, and piping and valves to transfer water from the suction source to the sparger. Suction piping is provided from the CST and the suppression pool. Pump suction is normally aligned to the CST source to minimize injection of suppression pool water into the RPV. However, if the CST water supply is low or the suppression pool level is high, an automatic transfer to the suppression pool water source ensures a water supply for continuous operation of the HPCF System. The HPCF System is designed to provide core cooling over a wide range of RPV pressures, (~~0~~0.69 to 8.12 MPaD), vessel to the air space of the compartment containing the water source for the pump suction. Upon receipt of an initiation signal, the HPCF pumps automatically start (when electrical power is available) and valves in the flow path begin to open. Since the HPCF System is designed to operate over the full range of RPV pressures, HPCF flow begins as soon as the necessary valves are open. A full flow test line is provided to route water from and to the ~~CST~~ suppression pool to allow testing of the HPCF System during normal operation without injecting water into the RPV.

The RCIC System is designed to provide core cooling for a wide range of reactor pressures, 1.035 MPa~~G~~D to 8.12 Mpa~~G~~D, vessel to the air space of the compartment containing the water source for the pump suction. Upon receipt of an initiation signal, the RCIC turbine accelerates to a specified speed. As the RCIC flow increases, the turbine control valve is automatically adjusted to maintain design flow. Exhaust steam from the RCIC turbine is discharged to the suppression pool. A full flow test line is provided to route water from and to the suppression pool to allow testing of the RCIC System during normal operation without injecting water into the RPV. For the station black out scenario, where all AC power from the offsite AC circuits and from the standby diesel generators are assumed to be lost, RCIC is designed to provide makeup water to the RPV. Diverse alternatives to RCIC are provided by the Combustion Turbine Generator (CTG) and the AC-Independent Water Addition (ACIWA) mode of RHR(C) (References 13 and 14). If RCIC is inoperable, water can be injected into the RPV either by powering other ECCS subsystems from the CTG or by the Fire Protection System (FPS) using the ACIWA mode of RHR(C).

BASES

The ADS (Ref. 1) consists of 8 of the 18 S/RVs. It is designed to provide depressurization of the primary system during a small break LOCA if RCIC and HPCF fail or are unable to maintain required water level in the RPV. ADS operation reduces the RPV pressure to within the operating pressure range of the low pressure ECCS subsystems (LPFL), so that these subsystems can provide core cooling. Each ADS valve is supplied with pneumatic power from ~~either~~ its own dedicated accumulator located in the drywell~~, or from the atmospheric control system (ACS) directly when pneumatic power from the accumulators is not needed~~. The ACS ~~also~~ supplies the nitrogen (at pressure) necessary to assure the ADS accumulators remain charged for use in emergency actuation. If nitrogen is not available from the ACS, nitrogen is supplied from the High Pressure Nitrogen Gas Supply System via high pressure nitrogen gas storage bottles.

LCO

Each ECCS subsystem and eight ADS valves are required to be OPERABLE. The ECCS subsystems are defined as the three LPFL subsystems, the two HPCF subsystems, and the RCIC System. The high pressure ECCS subsystems are defined as the two HPCF subsystems and the RCIC System.

With less than the required number of ECCS subsystems OPERABLE during a limiting design basis LOCA concurrent with the worst case single failure, the margins to the limits specified in 10 CFR 50.46 (Ref. 7) would be reduced. Furthermore, all ECCS subsystems are assumed to be initially available in the comprehensive set of analyses performed to satisfy the single failure criterion required by 10 CFR 50.46 (Ref. 7). Thus all ECCS subsystems must be OPERABLE. The ECCS is supported by other systems that provide automatic ECCS initiation signals (LCO 3.3.1.1, "SSLC Sensor Instrumentation" and LCO 3.3.1.4, "ESF Actuation Instrumentation"), cooling and service water to cool rooms containing ECCS equipment (LCO 3.7.1, "Reactor Building Cooling Water (RCW) System, Reactor Service Water (RSW) System and Ultimate Heat Sink (UHS) – Operating"~~, LCO 3.7.2, "RCW/RSW and UHS – Shutdown" and LCO 3.7.3 "RCW/RSW and UHS – Refueling"~~), and electrical power (LCO 3.8.1, "AC Sources – Operating," and LCO 3.8.4, "DC Sources – Operating").

B 3.5 EMERGENCY CORE COOLING SYSTEMS (ECCS)

B 3.5.2 ECCS- Shutdown

BASES

The information in this section of the reference ABWR DCD, including all subsections, is incorporated by reference with no departures or supplements.

B 3.6 CONTAINMENT SYSTEMS

B 3.6.1.1 Primary Containment

BASES

The information in this section of the reference ABWR DCD, including all subsections, is incorporated by reference with the following departures.

STD DEP 6.2-2

STD DEP 16.3-43

STD DEP 16.3-44

STD DEP 16.3-45

BACKGROUND

The isolation devices for the penetrations in the primary containment boundary are a part of the containment leak tight barrier. To maintain this leak tight barrier:

a. All penetrations required to be closed during accident conditions are either:

1. capable of being closed by an OPERABLE automatic Containment Isolation System, or

2. closed by manual valves, blind flanges, or de-activated automatic valves secured in their closed positions, except as provided in LCO 3.6.1.3, "Primary Containment Isolation Valves (PCIVs)";

STD DEP 16.3-43

*b. The primary containment air lock*s ~~*is*~~ are *OPERABLE, except as provided in LCO 3.6.1.2, "Primary Containment Air Locks";*

c. The sealing mechanism associated with a penetration (e.g., welds, bellows, or o-rings) is OPERABLE.

BASES

APPLICABLE SAFETY ANALYSES

The safety design basis for the primary containment is that it must withstand the pressures and temperatures of the limiting DBA without exceeding the design leakage rate.

The DBA that postulates the maximum release of radioactive material within primary containment is a LOCA. In the analysis of this accident, it is assumed that primary containment is OPERABLE such that release of fission products to the environment is controlled by the rate of primary containment leakage.

Analytical methods and assumptions involving the primary containment are presented in References 1 and 2. The safety analyses assume a nonmechanistic fission product release following a DBA, which forms the basis for determination of offsite doses. The fission product release is, in turn, based on an assumed leakage rate from the primary containment. OPERABILITY of the primary containment ensures that the leakage rate assumed in the safety analyses is not exceeded.

STD DEP 6.2-2

The maximum allowable leakage rate for the primary containment (L_a) is 0.5% by weight of the containment air per 24 hours at the ~~maximum~~ calculated *peak containment pressure (P_a) of ~~0.269 MPaG~~* 279.6 kPaG *or [ ]% by weight of the containment air per 24 hours at the reduced pressure of Pt of [ ] MPaG (Ref. 1).*

SURVEILLANCE REQUIREMENTS

SR 3.6.1.1.1

STD DEP 16.3-44

Maintaining the primary containment OPERABLE requires compliance with the visual examinations and leakage rate test requirements of 10 CFR 50, Appendix J (Ref. 3), as modified by approved exemptions. Failure to meet air lock leakage testing (SR 3.6.1.2.1), ~~[~~resilient seal primary containment purge valve leakage testing (SR 3.6.1.3.~~7~~6)~~,] main steam isolation valve leakage (SR 3.6.1.3.13)~~, or hydrostatically tested valve leakage (SR 3.6.1.3.~~12~~11) does not necessarily result in a failure of this SR. The impact of the failure to meet these SRs must be evaluated against the Type A, B, and C acceptance criteria of 10 CFR 50, Appendix J. The Frequency is required by 10 CFR 50, Appendix J (Ref. 3), as modified by approved exemptions. Thus, SR 3.0.2 (which allows Frequency extensions) does not apply.

BASES

STD DEP 16.3-45

REFERENCES

1. *DCD Tier 2, Section 6.2.*
2. *DCD Tier 2, Section ~~15.1~~*15.6
3. *10 CFR 50, Appendix J.*

B 3.6 CONTAINMENT SYSTEMS

B 3.6.1.2 Primary Containment Air Locks

BASES

The information in this section of the reference ABWR DCD, including all subsections, is incorporated by reference with the following departures and site-specific supplement. The site-specific supplement partially addresses COL License Information Item 16.1.

STD DEP 6.2-2

STD DEP 16.3-70

BACKGROUND

The primary containment air locks form part of the primary containment pressure boundary. As such, air lock integrity and leak tightness are essential for maintaining primary containment leakage rate to within limits in the event of a DBA. Not maintaining air lock integrity or leak tightness may result in a leakage rate in excess of that assumed in the unit safety analysis. ~~SR 3.6.1.1.1~~ SR 3.6.1.2.1 *leakage rate requirements conform with 10 CFR 50, Appendix J (Ref. 2), as modified by approved exemptions.*

STD DEP 6.2-2

APPLICABLE SAFETY ANALYSES

The DBA that postulates the maximum release of radioactive material within primary containment is a LOCA. In the analysis of this accident, it is assumed that primary containment is OPERABLE, such that release of fission products to the environment is controlled by the rate of primary containment leakage. The primary containment is designed with a maximum allowable leakage rate (L_a) of 0.5% (excluding MSIV leakage) by weight of the containment air per 24 hours at the calculated maximum peak containment pressure (P_a) of ~~0.269 MPaG~~ 279.6 kPaG *(Ref. 3). This allowable leakage rate forms the basis for the acceptance criteria imposed on the SRs associated with the air lock.*

B 3.6 CONTAINMENT SYSTEMS

B 3.6.1.3 Primary Containment Isolation Valves (PCIVs)

BASES

The information in this section of the reference ABWR DCD, including all subsections, is incorporated by reference with the following departures and site-specific supplements. The site-specific supplements partially addresses COL License Information Item 16.1.

STD DEP 6.2-1
STD DEP 16.3-71
STD DEP 16.3-72
STD DEP 16.3-73
STD DEP 16.3-74

STD DEP 6.2-1
STD DEP 16.3-73

BACKGROUND

*The primary containment purge lines are ~~550~~*500 *mm in diameter; vent lines are ~~550~~*500 *mm in diameter. The ~~550~~*500 *mm primary containment purge valves are normally maintained closed in MODES 1, 2, and 3 to ensure leak tightness. The isolation valve~~s~~ on the ~~550~~*500 *mm vent line~~s~~* from the drywell *ha~~ve~~*s a *50 mm bypass line~~s~~ around ~~them~~* it *for use during normal reactor operation. ~~Two additional redundant excess flow isolating dampers are provided on the vent line upstream of the Standby Gas Treatment (SGT) System filter trains. These isolation dampers, together with the~~*The *PCIVs~~,~~ will* close before fuel failure and *prevent high pressure from reaching the SGT System filter trains in the unlikely event of a loss of coolant accident (LOCA) during venting. ~~Closure of the excess flow isolation dampers will not prevent the SGT System from performing its design function (that is, to maintain a negative pressure in the secondary containment). To ensure that a vent path is available, a 50 mm bypass line is provided around the dampers.~~*

STD DEP 16.3-73

APPLICABLE SAFETY ANALYSES

The DBAs that result in a release of radioactive material within primary containment are a LOCA and a main steam line break (MSLB). In the analysis for each of these accidents, it is assumed that PCIVs are either closed or close within the required isolation times following event initiation. This ensures that potential leakage paths to the environment through PCIVs (and primary containment purge valves) are minimized. Of the events analyzed in Reference 1, the MSLB is the most limiting event due to radiological consequences. The closure time of the main steam isolation valves (MSIVs) is the

BASES

most significant variable from a radiological standpoint. The MSIVs are required to close within 3 to 4.5 seconds; therefore, the 4.5 second closure time is assumed in the analysis. The safety analyses does not make any explicit assumptions concerning~~*assume that*~~ *the purge valves* ~~*were closed*~~ *at event initiation. Likewise, it is assumed that the primary containment is isolated such that release of fission products to the environment is controlled by the rate of primary containment leakage.*

STD DEP 16.3-73

~~*The DBA analysis assumes that within 60 seconds of the accident, isolation of the primary containment is complete and leakage is terminated, except for the maximum allowable leakage, L_a. The primary containment isolation total response time of 60 seconds includes signal delay, diesel generator startup (for loss of offsite power), and PCIV stroke times.*~~

The single failure criterion required to be imposed in the conduct of unit safety analyses was considered in the original design of the primary containment purge valves. Two valves in series on each purge line provide assurance that both the supply and exhaust lines could be isolated even if a single failure occurred.

~~*The primary containment purge valves may be unable to close in the environment following a LOCA. Therefore, each of the purge valves is required to remain sealed closed during MODES 1, 2, and 3. In this case, the single failure criterion remains applicable to the primary containment purge valve due to failure in the control circuit associated with each valve. Again, the primary containment purge valve design precludes a single failure from compromising primary containment OPERABILITY as long as the system is operated in accordance with this LCO.*~~

PCIVs satisfy Criterion 3 of the NRC Policy Statement.

LCO

PCIVs form a part of the primary containment boundary. The PCIV safety function is related to control of primary containment leakage rates during a DBA.

STD DEP 6.2-1
STD DEP 16.3-71

The power operated, automatic isolation valves are required to have isolation times within limits and actuate on an automatic isolation signal. The ~~*550*~~500 *mm purge valves must be* ~~*maintained sealed closed or*~~ *blocked to prevent*

full opening. The valves covered by this LCO are listed with their associated stroke times in Reference 2.

STD DEP 16.3-74

The normally closed isolation valves are considered OPERABLE when manual valves are closed, automatic valves are de-activated and secured in their closed position, blind flanges are in place, and closed systems are intact. These passive isolation valves and devices are those listed in Reference 2. Purge valves with resilient seals, ~~secondary bypass valves,~~ MSIVs, EFCVs, *and hydrostatically tested valves must meet additional leakage rate requirements. Other PCIV leakage rates are addressed by LCO 3.6.1.1, "Primary Containment," as Type C testing.*

This LCO provides assurance that the PCIVs will perform their designed safety functions to control leakage from the primary containment during accidents.

STD DEP 16.3-71

APPLICABILITY

In MODES 1, 2, and 3, a DBA could cause a release of radioactive material to primary containment. In MODES 4 and 5, the probability and consequences of these events are reduced due to the pressure and temperature limitations of these MODES. Therefore, most PCIVs are not required to be OPERABLE and the primary containment purge valves are not required to be ~~sealed~~ closed in MODES 4 and 5. Certain valves, however, are required to be OPERABLE to prevent inadvertent reactor vessel draindown. These valves are those whose associated instrumentation is required to be OPERABLE per LCO 3.3.1.1, "SSLC Sensor Instrumentation," and LCO 3.3.1.4, "ESF Actuation Instrumentation." (This does not include the valves that isolate the associated instrumentation.)

STD DEP 16.3-71

ACTIONS

The ACTIONS are modified by a Note allowing penetration flow path(s) except for the purge valve flow path(s) to be unisolated intermittently under administrative controls. These controls consist of stationing a dedicated operator at the controls of the valve, who is in continuous communication with the control room. In this way, the penetration can be rapidly isolated when a need for primary containment isolation is indicated. ~~Due to the size of the primary containment purge line penetration and the fact that those penetrations exhaust directly from the containment atmosphere to the environment, the penetration flow path containing these valves is not allowed to be opened under administrative controls. A single purge valve in a penetration flow path may be opened to effect repairs to an inoperable valve, as allowed by SR 3.6.1.3.1.~~

A second Note has been added to provide clarification that, for the purpose of this LCO, separate Condition entry is allowed for each penetration flow path.

The ACTIONS are modified by a third Note, which ensures that appropriate remedial actions are taken, if necessary, if the affected system(s) are rendered inoperable by an inoperable PCIV (e.g., an Emergency Core Cooling Systems subsystem is inoperable due to a failed open test return valve).

Note 4 ensures appropriate remedial actions are taken when the primary containment leakage limits are exceeded. Pursuant to LCO 3.0.6, these actions are not required even when the associated LCO is not met. Therefore, Notes 3 and 4 are added to require that the proper actions are taken.

A.1 and A.2

STD DEP 16.3-71

With one or more penetration flow paths with one PCIV inoperable except for purge valve leakage, main steam isolation valve leakage, or hydrostatically tested line leakage *not within limit, the affected penetration flow paths must be isolated. The method of isolation must include the use of at least one isolation barrier that cannot be adversely affected by a single active failure. Isolation barriers that meet this criterion are a closed and de-activated automatic valve, a closed manual valve, a blind flange, and a check valve with flow through the valve secured. For penetration isolated in accordance with Required Action A.1, the valve used to isolate the penetration should be the closest available valve to the primary containment. The Required Action must be completed within the 4 hour Completion Time (8 hours for main steam lines). The Completion Time of 4 hours is reasonable considering the time required to isolate the penetration and the relative importance of supporting primary containment OPERABILITY during MODES 1, 2, and 3. For main steam lines, an 8 hour Completion Time is allowed. The Completion Time of 8 hours for the main steam lines allows a period of time to restore the MSIVs to OPERABLE status given the fact that MSIV closure will result in isolation of the main steam line(s) and a potential for plant shutdown.*

STD DEP 16.3-74

For affected penetrations that have been isolated in accordance with Required Action A.1, the affected penetration flow path(s) must be verified to be isolated on a periodic basis. This is necessary to ensure that primary containment penetrations required to be isolated following an accident, and no longer

capable of being automatically isolated, will be in the isolation position should an event occur. This Required Action does not require any testing or valve manipulation. Rather, it involves verification, through a system walkdown, that those valves outside containment and capable of potentially being mispositioned are in the correct position. The Completion Time of "once per 31 days for isolation devices outside primary containment, drywell, and steam tunnel*" is appropriate because the valves are operated under administrative controls and the probability of their misalignment is low. For valves inside primary containment, the time period specified "prior to entering MODE 2 or 3 from MODE 4, if primary containment was de-inerted while in MODE 4, if not performed within the previous 92 days" is based on engineering judgment and is considered reasonable in view of the inaccessibility of the valves and other administrative controls ensuring that valve misalignment is an unlikely possibility.*

Condition A is modified by a Note indicating that this Condition is only applicable to those penetration flow paths with two PCIVs. For penetration flow paths with one PCIV, Condition C provides the appropriate Required Actions.

Required Action A.2 is modified by a Note that applies to valves and blind flanges located in high radiation areas, and allows them to be verified by use of administrative means. Allowing verification by administrative means is considered acceptable, since access to these areas is typically restricted. Therefore, the probability of misalignment of these valves, once they have been verified to be in the proper position, is low.

STD DEP 16.3-71

B.1

With one or more penetration flow paths with two PCIVs inoperable except for purge valve leakage, main steam isolation valve leakage, or hydrostatically tested line leakage*, either the inoperable PCIVs must be restored to OPERABLE status or the affected penetration flow path must be isolated within 1 hour. The method of isolation must include the use of at least one isolation barrier that cannot be adversely affected by a single active failure. Isolation barriers that meet this criterion are a closed and de-activated automatic valve, a closed manual valve, and a blind flange. The 1 hour Completion Time is consistent with the ACTIONS of LCO 3.6.1.1.*

Condition B is modified by a Note indicating this Condition is only applicable to penetration flow paths with two PCIVs.

For penetration flow paths with one PCIV, Condition C provides the appropriate Required Actions.

C.1 and C.2

With one or more penetration flow paths with one PCIV inoperable, the inoperable valve must be restored to OPERABLE status or the affected penetration flow path must be isolated. The method of isolation must include the use of at least one isolation barrier that cannot be adversely affected by a single active failure. Isolation barriers that meet this criterion are a closed and de-activated automatic valve, a closed manual valve, and a blind flange. A check valve may not be used to isolate the affected penetration. Required Action C.1 must be completed within the 4 hour Completion Time. The Completion Time of 4 hours is reasonable considering the relative stability of the closed system (hence, reliability) to act as a penetration isolation boundary and the relative importance of supporting primary containment OPERABILITY during MODES 1, 2, and 3. The Completion Time of 12 hours is reasonable considering the instrument and the small pipe diameter of penetration (hence, reliability) to act as a penetration isolation boundary and the small pipe diameter of the affected penetrations. In the event the affected penetration flow path is isolated in accordance with Required Action C.1, the affected penetration must be verified to be isolated on a periodic basis. This is necessary to ensure that primary containment penetrations required to be isolated following an accident are isolated. The Completion Time of once per 31 days for verifying each affected penetration is isolated is appropriate because the valves are operated under administrative controls and the probability of their misalignment is low.

Condition C is modified by a Note indicating that this Condition is only applicable to penetration flow paths with only one PCIV. For penetration flow paths with two PCIVs, Conditions A and B provide the appropriate Required Actions.

BASES

Required Action C.2 is modified by a Note that applies to valves and blind flanges located in high radiation areas and allows them to be verified by use of administrative means. Allowing verification by administrative means is considered acceptable, since access to these areas is typically restricted. Therefore, the probability of misalignment of these valves, once they have been verified to be in the proper position, is low.

STD DEP 16.3-71

~~*D.1, D.2, and D.3*~~

~~*In the event one or more containment purge valves are not within the purge valve leakage limits, purge valve leakage must be restored to within limits or the affected penetration must be isolated. The method of isolation must be by the use of at least one isolation barrier that cannot be adversely affected by a single active failure. Isolation barriers that meet this criterion are a [closed and de-activated automatic valve, closed manual valve, and blind flange]. A purge valve with resilient seals utilized to satisfy Required Action D.1 must have been demonstrated to meet the leakage requirements of SR 3.6.1.3.7. The specified Completion Time is reasonable, considering that one containment purge valve remains closed (refer to the SR 3.6.1.3.1), so that a gross breach of containment does not exist.*~~

~~*In accordance with Required Action D.2, this penetration flow path must be verified to be isolated on a periodic basis. The periodic verification is necessary to ensure that containment penetrations required to be isolated following an accident, which are no longer capable of being automatically isolated, will be in the isolation position should an event occur. This Required Action does not require any testing or valve manipulation. Rather, it involves verification, through a system walkdown, that those isolation devices outside containment and potentially capable of being mispositioned are in the correct position. For the isolation devices inside containment, the time period specified as "prior to entering MODE 4 from MODE 5 if not performed within the previous 92 days" is based on engineering judgment and is considered reasonable in view of the inaccessibility of the isolation devices and other administrative controls that will ensure that isolation device misalignment is an unlikely possibility.*~~

~~*[For the containment purge valve with resilient seal that is isolated in accordance with Required Action D.1, SR 3.6.1.3.7 must be performed at least*~~

BASES

~~once every [92] days. This provides assurance that degradation of the resilient seal is detected and confirms that the leakage rate of the containment purge valve does not increase during the time the penetration is isolated. The normal Frequency for SR 3.6.1.3.7, 184 days, is based on an NRC initiative addressing the issue of resilient seal reliability in these purge valves. Since more reliance is placed on a single valve while in this Condition, it is prudent to perform the SR more often. Therefore, a Frequency of once per [92] days was chosen and has been shown to be acceptable based on operating experience.]~~

D.1

With purge valve leakage rate, main steam isolation valve leakage, or hydrostatically tested line leakage not within limit the assumptions of the safety analysis may not be met. Therefore, the leakage must be restored to within limit within 4 hours except for main steam line leakage and 8 hours for main steam line leakage. Restoration can be accomplished by isolating the penetration that caused the limit to be exceeded by use of one closed and de-activated automatic valve, closed manual valve, or blind flange. When a penetration is isolated, the leakage rate for the isolated penetration is assumed to be the actual pathway leakage through the isolation device. If two isolation devices are used to isolate the penetration, the leakage rate is assumed to be the lesser actual pathway leakage of the two devices. The 4 hour Completion Time is reasonable considering the time required to restore leakage by isolating the penetration and the relative importance of the leakage to the overall containment function. The Completion Time of 8 hours for MSIV leakage allows a period of time to restore the MSIV leakage and is acceptable given the fact that MSIV closure will result in isolation of the main steam line(s) and a potential for plant shutdown.

E.1 and E.2

If any Required Action and associated Completion Time cannot be met in MODE 1, 2, or 3, the plant must be brought to a MODE in which the LCO does not apply. To achieve this status, the plant must be brought to at least MODE 3 within 12 hours and to MODE 4 within 36 hours. The allowed Completion Times are reasonable, based on operating experience, to reach the required plant conditions from full power conditions in an orderly manner and without challenging plant systems.

F.1, G.1, H.1, and H.2

If any Required Action and associated Completion Time cannot be met, the unit must be placed in a condition in which the LCO does not apply. If applicable, CORE ALTERATIONS and movement of irradiated fuel assemblies must be immediately suspended. Suspension of these activities shall not preclude completion of movement of a component to a safe condition. Also, if applicable, action must be immediately initiated to suspend operations with a potential for draining the reactor vessel (OPDRVs) to minimize the probability of a vessel draindown and subsequent potential for fission product release. Actions must continue until OPDRVs are suspended and valve(s) are restored to OPERABLE status. If suspending an OPDRVs would result in closing the residual heat removal (RHR) shutdown cooling isolation valves, an alternative Required Action is provided to immediately initiate action to restore the valve(s) to OPERABLE status. This allows RHR to remain in service while actions are being taken to restore the valve.

BASES

STD DEP 16.3-71
SURVEILLANCE REQUIREMENTS

~~SR 3.6.1.3.1~~

~~Each 550 mm primary containment purge valve is required to be verified sealed closed at 31 day intervals. This SR is designed to ensure that a gross breach of primary containment is not caused by an inadvertent or spurious opening of a primary containment purge valve. Primary containment purge valves that are sealed closed must have motive power to the valve operator removed. This can be accomplished by de-energizing the source of electric power or removing the air supply to the valve operator. In this application, the term "sealed" has no connotation of leak tightness. The 31 day Frequency is a result of an NRC initiative related to primary containment purge valve use during unit operations.~~

~~This SR allows a valve that is open under administrative controls to not meet the SR during the time the valve is open. Opening a purge valve under administrative controls is restricted to one valve in a penetration flow path at a given time (refer to discussion for Note 1 of the ACTIONS) in order to effect repairs to that valve. This allows one purge valve to be opened without resulting in a failure of the Surveillance and resultant entry into the ACTIONS for this purge valve, provided the stated restrictions are met. Condition D must be entered during this allowance, and the valve opened only as necessary for effecting repairs. Each purge valve in the penetration flow path may be alternately opened, provided one remains sealed closed, if necessary, to complete repairs on the penetration.~~

~~The SR is modified by a Note stating that primary containment purge valves are only required to be sealed closed in MODES 1, 2, and 3. If a LOCA inside primary containment occurs in these MODES, the purge valves may not be capable of closing before the pressure pulse affects systems downstream of the purge valves or the release of radioactive material will exceed limits prior to the closing of the purge valves. At other times when the purge valves are required to be capable of closing (e.g., during handling of irradiated fuel), pressurization concerns are not present and the purge valves are allowed to be open.~~

SR 3.6.1.3.~~2~~1

This SR ensures that the primary containment purge valves are closed as required or, if open, open for an allowable reason.

The SR is also modified by a Note (Note 1), stating that primary containment purge valves are only required to be closed in MODES 1, 2, and 3. If a LOCA inside primary containment occurs in these MODES, the purge valves may not be

capable of closing before the pressure pulse affects systems downstream of the purge valves, or the release of radioactive material will exceed limits prior to the purge valves closing. At other times when the purge valves are required to be capable of closing (e.g., during handling of irradiated fuel), pressurization concerns are not present and the purge valves are allowed to be open.

The SR is modified by a Note (Note 2) stating that the SR is not required to be met when the purge valves are open for the stated reasons. The Note states that these valves may be opened for inerting, de-inerting, pressure control, ALARA, or air quality considerations for personnel entry, or Surveillances that require the valves to be open. The ~~550~~500 mm purge valves are capable of closing in the environment following a LOCA. Therefore, these valves are allowed to be open for limited periods of time. The 31 day Frequency is consistent with other PCIV requirements discussed in SR 3.6.1.3.~~3~~2.

SR 3.6.1.3.~~3~~2

This SR verifies that each primary containment isolation manual valve and blind flange that is located outside primary containment, and is required to be closed during accident conditions, is closed. The SR helps to ensure that post accident leakage of radioactive fluids or gases outside the primary containment boundary is within design limits. This SR does not require any testing or valve manipulation. Rather, it involves verification, through a system walkdown, that those valves outside primary containment, and capable of being mispositioned, are in the correct position. Since verification of valve position for valves outside primary containment is relatively easy, the 31 day Frequency was chosen to provide added assurance that the valves are in the correct positions.

Two Notes have been added to this SR. The first Note allows valves and blind flanges located in high radiation areas to be verified by use of administrative controls. Allowing verification by administrative controls is considered acceptable, since the primary containment is inerted and access to these areas is typically restricted during MODES 1, 2, and 3 for ALARA reasons. Therefore, the probability of misalignment of these valves, once they have been verified to be in the proper position, is low. A second Note has been included to clarify that valves that are open under administrative controls are not required to meet the SR during the time that the valves are open.

SR 3.6.1.3.~~4~~3

This SR verifies that each primary containment manual isolation valve and blind flange that is located inside primary containment, and is required to be closed

during accident conditions, is closed. The SR helps to ensure that post accident leakage of radioactive fluids or gases outside the primary containment boundary is within design limits. For valves inside primary containment, the Frequency defined as "prior to entering MODE 2 or 3 from MODE 4, if primary containment was de-inerted while in MODE 4, if not performed within the previous 92 days," is appropriate since these valves and flanges are operated under administrative controls and the probability of their misalignment is low.

Two Notes have been added to this SR. The first Note allows valves and blind flanges located in high radiation areas to be verified by use of administrative controls. Allowing verification by administrative controls is considered acceptable since the primary containment is inerted and access to these areas is typically restricted during MODES 1, 2, and 3 for ALARA reasons. Therefore, the probability of misalignment of these valves, once they have been verified to be in their proper position, is low. A second Note has been included to clarify that valves that are open under administrative controls are not required to meet the SR during the time that the valves are open.

SR 3.6.1.3.~~5~~4

The automatic traversing incore probe (ATIP) shear isolation valves are actuated by explosive charges. Surveillance of explosive charge continuity provides assurance that ATIP valves will actuate when required. Other administrative controls, such as those that limit the shelf life of the explosive charges, must be followed. The 31 day Frequency is based on operating experience that has demonstrated the reliability of the explosive charge continuity.

SR 3.6.1.3.~~6~~5

Verifying the isolation time of each power operated and each automatic PCIV is within limits is required to demonstrate OPERABILITY. MSIVs may be excluded from this SR since MSIV full closure isolation time is demonstrated by SR 3.6.1.3.~~8~~7. The isolation time test ensures that the valve will isolate in a time period less than or equal to that assumed in the safety analyses. The isolation time and Frequency of this SR are in accordance with the requirements of the Inservice Testing Program or 92 days (Refs. 2 and 5).

SR 3.6.1.3.~~7~~6

For primary containment purge valves with resilient seals, additional leakage rate testing beyond the test requirements of 10 CFR 50, Appendix J (Ref. 3), is

required to ensure OPERABILITY. Operating experience has demonstrated that this type of seal has the potential to degrade in a shorter time period than do other seal types. Based on this observation, and the importance of maintaining this penetration leak tight (due to the direct path between primary containment and the environment), a Frequency of 184 days was established as part of the NRC resolution of the resilient seal issue. Additionally, this SR must be performed once within 92 days after opening the valve. The 92 day Frequency was chosen recognizing that cycling the valve could introduce additional seal degradation (beyond that which occurs to a valve that has not been opened). Thus, decreasing the interval (from 184 days) is a prudent measure after a valve has been opened.

The SR is modified by a Note stating that the primary containment purge valves are only required to meet leakage rate testing requirements in MODES 1, 2, and 3. If a LOCA inside primary containment occurs in these MODES, purge valve leakage must be minimized to ensure offsite radiological release is within limits. At other times when the purge valves are required to be capable of closing (e.g., during handling of irradiated fuel), pressurization concerns are not present and the purge valves are allowed to be open.

A second Note has been added to this SR requiring that the results be evaluated against the acceptance criteria of SR 3.6.1.1.1. This ensures that primary containment purge valve leakage is properly accounted for in determining the overall primary containment leakage rate.

SR 3.6.1.3.~~8~~7

Verifying the total closure time of each MSIV exclusive of electrical delay is within the specified limits is required to demonstrate OPERABILITY. The isolation time test ensures that the MSIV will isolate in a time period that does not exceed the times assumed in the DBA analyses. This ensures that the calculated radiological consequences of these events remain within 10 CFR 100 limits. The Frequency of this SR is 3 months.

BASES

SR 3.6.1.3.~~9~~8

STD DEP 16.3-74

Automatic PCIVs close on a primary containment isolation signal to prevent leakage of radioactive material from primary containment following a DBA. This SR ensures that each automatic PCIV will actuate to its isolation position on a primary containment isolation signal. The ~~LOGIC SYSTEM FUNCTIONAL TEST~~ testing in LCO 3.3.1.1 and LCO 3.3.1.4 *~~in SR 3.3.6.3.6~~ overlaps this SR to provide complete testing of the safety function. The 18 month Frequency was developed considering it is prudent that this Surveillance be performed only during a unit outage since isolation of penetrations would eliminate cooling water flow and disrupt the normal operation of many critical components. For some PCIVs, the Inservice Testing Program allows this surveillance to be performed during cold shutdown, as opposed to a unit outage, provided the Frequency is no greater than 18 months. Operating experience has shown that these components usually pass this Surveillance when performed at the 18 month Frequency. Therefore, the Frequency was concluded to be acceptable from a reliability standpoint.*

SR 3.6.1.3.~~10~~9

This SR requires a demonstration that each reactor instrumentation line excess flow check valve (EFCV) is OPERABLE by verifying that the valve reduces flow to ≤ 1.05 cm^3/sec on a simulated instrument line break. This SR provides assurance that the instrumentation line EFCVs will perform so that predicted radiological consequences will not be exceeded during the postulated instrument line break event evaluated in Reference 4. The 18 month Frequency is based on the need to perform this Surveillance under the conditions that apply during a plant outage and the potential for an unplanned transient if the Surveillance were performed with the reactor at power. Operating experience has shown that these components usually pass this Surveillance when performed at the 18 month Frequency. Therefore, the Frequency was concluded to be acceptable from a reliability standpoint.

*SR 3.6.1.3.~~11~~*10

The ATIP shear isolation valves are actuated by explosive charges. An in place functional test is not possible with this design. The explosive squib is removed and tested to provide assurance that the valves will actuate when required. The replacement charge for the explosive squib shall be from the same manufactured batch as the one fired or from another batch that has been certified by having one of the batch successfully fired. The Frequency of 18 months on a STAGGERED TEST BASIS is considered adequate given the administrative

controls on replacement charges and the frequent checks of circuit continuity (SR 3.6.1.3.54).

*SR 3.6.1.3.~~12~~*11

Surveillance of hydrostatically tested lines provides assurance that the calculation assumptions of Reference 2 are met. Note also that dual function valves must pass all applicable SRs, including the Type C leakage rate test (SR 3.6.1.1.1), if appropriate. The combined leakage rates must be demonstrated in accordance with the leakage rate test requirements of 10 CFR 50, Appendix J (Ref. 3), as modified by approved exemptions.

This SR has been modified by two Notes. Note 1 states that these valves are only required to meet the combined leakage rate in MODES 1, 2, and 3, since this is when the Reactor Coolant System is pressurized and primary containment is required. In some instances, the valves are required to be capable of automatically closing during MODES other than MODES 1, 2, and 3. However, their leak tightness under accident conditions is not required in these other MODES or conditions. Note 2 has been added to this SR requiring the results to be evaluated against the acceptance criteria of SR 3.6.1.1.1. This ensures that these valves are properly accounted for in determining the overall primary containment leakage rate.

*SR 3.6.1.3.~~13~~*12

STD DEP 16.3-72

The analyses in References 2 and 4 are based on leakage that is less than the specified leakage rate. Leakage through each MSIV must be ≤ 1 m^3/h when tested at ≥ Pt of 0.173 MPaG. The MSIV leakage rate must be verified to be in accordance with the leakage test requirements of 10 CFR 50, Appendix J (Ref. 3), as modified by approved exemptions. ~~A Note has been added to this SR requiring the results to be evaluated against the acceptance criteria of SR 3.6.1.1.1. This ensures that MSIV leakage is properly accounted for in determining the overall primary containment leakage rate.~~ The Frequency is required by 10 CFR 50, Appendix J, as modified by approved exemptions; thus, SR 3.0.2 (which allows Frequency extensions) does not apply.

*SR 3.6.1.3.~~14~~*13

STD DEP 6.2-1

~~*Reviewer's Note: This SR is only required for those plants with purge valves with resilient seals allowed to be open during [MODE 1, 2, 3, or 4] and having blocking devices that are not permanently installed on the valves.*~~

BASES

Verifying each ~~550~~500 mm primary containment purge valve is blocked to restrict opening to ≤ [50]% is required to ensure that the valves can close under DBA conditions within the times assumed in the analysis of References 2 and 4.

~~[~~The SR is modified by a Note stating that this SR is only required to be met in MODES 1, 2, and 3.~~]~~ If a LOCA occurs, the purge valves must close to maintain containment leakage within the values assumed in the accident analysis. At other times when purge valves are required to be capable of closing (e.g., during movement of irradiated fuel assemblies), pressurization concerns are not present, thus the purge valves can be fully open. The 18 month Frequency is appropriate because the blocking devices are typically removed only during a refueling outage.

B 3.6 CONTAINMENT SYSTEMS

B 3.6.1.4 Drywell Pressure

BASES

The information in this section of the reference ABWR DCD, including all subsections, is incorporated by reference with the following departure.

STD DEP 6.2-2

APPLICABLE SAFETY ANALYSES

Primary containment performance is evaluated for the entire spectrum of break sizes for postulated LOCAs (Ref. 1). Among the inputs to the DBA is the initial primary containment internal pressure (Ref. 1). Analyses assume an initial drywell pressure of 5.20×10^{-3} MPaG. This limitation ensures that the safety analysis remains valid by maintaining the expected initial conditions and ensures that the peak LOCA drywell internal pressure does not exceed the maximum allowable of 0.310 MPaG.

The maximum calculated drywell pressure occurs during the ~~reactor blowdown~~ long term *phase of the DBA, which is determined to be a feedwater line break. The calculated peak drywell pressure for this limiting event is ~~0.269 MPaG~~* 279.6 kPaG *(Ref. 1).*

B 3.6 CONTAINMENT SYSTEMS

B 3.6.1.5 Drywell Air Temperature

BASES

The information in this section of the reference ABWR DCD, including all subsections, is incorporated by reference with the following departure.

STD DEP 6.2-2

APPLICABLE SAFETY ANALYSES

Primary containment performance is evaluated for a spectrum of break sizes for postulated loss of coolant accidents (LOCAs) (Ref. 1). Among the inputs to the design basis analysis is the initial drywell average air temperature (Ref. 1). Analyses assume an initial average drywell air temperature of 57°C. This limitation ensures that the safety analysis remains valid by maintaining the expected initial conditions and ensures ~~*that the peak LOCA drywell temperature does not exceed the maximum allowable temperature of 171°C (Ref. 2). Exceeding this design temperature may result in the degradation of the primary containment structure under accident loads*~~ the primary containment structural materials remain below the design temperature. *Equipment inside primary containment, required to mitigate the effects of a DBA, is designed to operate and be capable of operating under environmental conditions expected for the accident.*

B 3.6 CONTAINMENT SYSTEMS

B 3.6.1.6 Wetwell-to-Drywell Vacuum Breakers

BASES

The information in this section of the reference ABWR DCD, including all subsections, is incorporated by reference with the following departures.

STD DEP 6.2-2

STD DEP 16.3-34

BACKGROUND

The function of the wetwell-to-drywell vacuum breakers is to relieve vacuum in the drywell. There are eight internal vacuum breakers between the drywell and the wetwell, which allow gas and steam flow from the wetwell to the drywell when the drywell is at a lower pressure than the wetwell. Therefore, the wetwell-to-drywell vacuum breakers prevent an excessive negative differential pressure across the wetwell/drywell boundary. Each vacuum breaker is a self actuating valve, similar to a check valve, and requires no external power for actuation.

STD DEP 6.2-2

A negative pressure inside the drywell is caused by rapid depressurization of the drywell. Events that cause this rapid depressurization are cooling cycles, ~~inadvertent drywell spray actuation and~~ steam condensation from sprays or subcooled water spilling out of a break in reflood stage of a primary system rupture. Cooling cycles result in minor pressure transients in the drywell that occur slowly and are normally controlled by heating and ventilation equipment. Spray actuation or the spill of subcooled water out of a break results in more significant pressure transients and are important in sizing the internal vacuum breakers.

In the event of a primary system rupture, steam condensation within the drywell results in the most severe pressure transient. Following a primary system rupture, gas in the drywell is purged into the wetwell free airspace, leaving the drywell full of steam. Subsequent condensation of the steam can be caused in ~~two~~ three *possible ways, namely, Emergency Core Cooling System flow from a ruptured pipe*, feedwater flow from a ruptured pipe*, or containment spray actuation following a loss of coolant accident (LOCA). These ~~two~~* three cases determine the maximum depressurization rate of the drywell.

BASES

STD DEP 16.3-34

STD DEP 6.2-2

LCO

All eight of the vacuum breakers must be OPERABLE for opening. All wetwell-to-drywell vacuum breakers, however, are required to be closed (except ~~during testing or~~ when the vacuum breakers are performing the intended design function). The vacuum breaker OPERABILITY requirement provides assurance that the drywell-to-wetwell negative differential pressure remains below the design value. The requirement that the vacuum breakers be closed ensures that there is no excessive bypass leakage should a LOCA occur.

STD DEP 6.2-2

APPLICABILITY

In MODES 1, 2, and 3, a DBA could result in excessive negative differential pressure across the drywell wall, caused by the rapid depressurization of the drywell. The event that results in the limiting rapid depressurization of the drywell is the primary system rupture (feedwater line break or main steam line break) *that purges the drywell of gas and fills the drywell free airspace with steam. Subsequent condensation of the steam (due to cold water spilling out of the ruptured pipe* and due to actuation of drywell sprays*) would result in depressurization of the drywell. The limiting pressure and temperature of the primary system prior to a DBA occur in MODES 1, 2, and 3. ~~Also, inadvertent actuation of the drywell spray could result in rapid depressurization of the drywell.~~ The vacuum breakers, therefore, are required to be OPERABLE in MODES 1, 2, and 3.*

BASES

ACTIONS *B.1*

STD DEP 6.2-2

One or more open vacuum breakers allow communication between the drywell and wetwell airspace, and, as a result, there is the potential for wetwell overpressurization due to this bypass leakage if a LOCA were to occur. Since the vacuum breakers are normally biased closed by gravitational force, Condition B mostly like be entered due to inaccurate position indication.

If vacuum breaker position indication is not reliable, an alternate method of verifying that the vacuum breakers are closed is by checking the position indication instrumentation. Another alternate method of verifying that the vacuum breakers are closed is by increasing the drywell pressure by 3.4~~3~~5xl0^{-3} MPa above the wetwell pressure and verifying that the pressure differential does not fall below 2.06xl0^{-3} MPaD for 15 minutes without makeup. The required 12 hour Completion Time is considered adequate to perform this test. If the stated criteria of this test is not met, Condition C must be entered.

SURVEILLANCE REQUIREMENTS *SR 3.6.1.6.1*

STD DEP 16.3-34
STD DEP 6.2-2

Each vacuum breaker is verified closed (except ~~when being tested in accordance with SR 3.6.1.6.2 or~~ when performing its intended function) to ensure that this potential large bypass leakage path is not present. This Surveillance is performed by observing the vacuum breaker position indication or by increasing the drywell pressure by 3.4~~3~~5xl0^{-3} MPa above the wetwell pressure and verifying that the pressure differential does not fall below 2.06xl0^{-3} MPaD for 15 minutes without makeup. This criteria was developed assuming ideal gas behavior, a leakage area corresponding to 10% of the allowable leakage area, the average temperatures in the wetwell and drywell remained within ± 0.5°C throughout the testing interval, and that adequate instrumentation exists to measure the pressure decay. Basing the test criteria on 10% of the allowable leakage area provides a large degree of margin in demonstrating that the vacuum breakers are adequately closed and sealed. Additionally, if the allowable leakage area were to exist, a pressure differential of 3.4~~3~~5xl0^{-3} MPa would decay completely within 15 minutes. Maintaining the average temperatures of the wetwell and drywell is important because the pressure differentials in this test are relatively small and can be significantly impacted by small temperature changes. (However, if

temperature control is a problem, new test parameters should be developed which take into account the normal temperature variations.)

STD DEP 6.2-2

SR 3.6.1.6.3

Verification of the vacuum breaker opening pressure is necessary to ensure the validity of the safety analysis assumption that the vacuum breakers are fully open when the wetwell pressure exceeds the drywell pressure by 3.4~~3~~5x10^{-3} MPa. The 18 month Frequency is based on the need to perform this Surveillance under the conditions that apply during a plant outage. The 18 month Frequency is acceptable based on the passive design of the vacuum breakers (no actuator required for opening).

B 3.6 CONTAINMENT SYSTEMS

B 3.6.2.1 Suppression Pool Average Temperature

BASES

The information in this section of the reference ABWR DCD, including all subsections, is incorporated by reference with the following departures.

STD DEP 16.3-32

STD DEP 16.3-33

LCO

A limitation on the suppression pool average temperature is required to provide assurance that the containment conditions assumed for the safety analyses are met. This limitation subsequently ensures that peak primary containment pressures and temperatures do not exceed maximum allowable values during a postulated DBA or any transient resulting in heatup of the suppression pool. The LCO requirements are:

STD DEP 16.3-33

a. *Average temperature ≤ 35°C when ~~THERMAL POWER is < 1% RTP~~* THERMAL POWER is > 1% RTP *and no testing that adds heat to the suppression pool is being performed. This requirement ensures that licensing bases initial conditions are met.*

b. *Average temperature ≤ 40.6°C when* ~~THERMAL POWER is < 1% RTP~~ *THERMAL POWER is > 1% RTP and testing that adds heat to the suppression pool is being performed. This required value ensures that the unit has testing flexibility, and was selected to provide margin below the 43.3°C limit at which reactor shutdown is required. When testing ends, temperature must be restored to ≤ 35°C within 24 hours according to Required Action A.2. Therefore, the time period that the temperature is > 35°C is short enough not to cause a significant increase in unit risk.*

BASES

ACTIONS *D.1* and D.2

STD DEP 16.3-32

When the suppression pool temperature reaches 43.3°C a reactor scram is automatically initiated. Additionally, when suppression pool temperature is > 43.3°C, increased monitoring of pool temperature is required to ensure that it remains ≤ 48.9°C. The once per 30 minute Completion Time is adequate, based on operating experience. Given the high suppression pool average temperature in this Condition, the monitoring Frequency is increased to twice that of Condition A. Furthermore, the 30 minute Completion Time is considered adequate in view of other indications available in the control room, including alarms, to alert the operator to an abnormal suppression pool average temperature condition. Additionally, the plant must be brought to a MODE in which the LCO does not apply. To achieve this status, the plant must be brought to at least MODE 4 within 36 hours. The allowed Completion Time is reasonable, based on operating experience, to reach the required plant condition from full power conditions in an orderly manner and without challenging plant systems.

STD DEP 16.3-32

E.1 ~~and E.2~~

If suppression pool average temperature cannot be maintained at ≤ 48.9°C, the plant must be brought to a MODE in which the LCO does not apply. To achieve this status, the reactor pressure must be reduced to < 1.38 MPaG within 12 hours~~, and the plant must be brought to at least MODE 4 within 36 hours~~. The allowed Completion Time~~s are~~ is *reasonable, based on operating experience, to reach the required plant conditions from full power conditions in an orderly manner and without challenging plant systems.*

Continued addition of heat to the suppression pool with suppression pool temperature > 48.9°C could result in exceeding the design basis maximum allowable values for primary containment temperature or pressure. Furthermore, if a blowdown were to occur when the temperature was > 48.9°C, the maximum allowable bulk and local temperatures could be exceeded very quickly.

B 3.6 CONTAINMENT SYSTEMS

B 3.6.2.2 Suppression Pool Water Level

BASES

The information in this section of the reference ABWR DCD, including all subsections, is incorporated by reference with no departures or supplements.

B 3.6 CONTAINMENT SYSTEMS

B 3.6.2.3 Residual Heat Removal (RHR) Suppression Pool Cooling

BASES

The information in this section of the reference ABWR DCD, including all subsections, is incorporated by reference with the following departures.

STD 16.3-36

STD 16.3-37

BACKGROUND

STD 16.3-36

The combined heat removal capability of two RHR subsystems operating simultaneously is sufficient to meet the overall DBA pool cooling requirement for loss of coolant accidents (LOCAs) and transient events such as a turbine trip or stuck open safety/relief (S/RV). S/RV leakage~~,~~ and ~~high pressure core injection and~~ Reactor Core Isolation Cooling System testing increase suppression pool temperature more slowly. The RHR Suppression Pool Cooling System is also used to lower the suppression pool water bulk temperature following such events.

REFERENCES

1. DCD Tier 2, Section 6.2.

STD 16.3-37

~~*2. ASME, Boiler and Pressure Vessel Code, Section XI*~~ Not Used.

B 3.6 CONTAINMENT SYSTEMS

B 3.6.2.4 Residual Heat Removal (RHR) Containment Spray

BASES

The information in this section of the reference ABWR DCD, including all subsections, is incorporated by reference with the following departures.

STD 6.2-2

APPLICABLE SAFETY ANALYSES

Reference 1 contains the results of analyses that predict the primary containment pressure response for a LOCA with the maximum bypass leakage effective area. The effective flow path area for bypass leakage has been calculated to be 5 cm^2, assuming no spray operation. With operation of one ~~wetwell~~ containment *spray subsystem, the effective bypass leakage area was calculated to be 50 cm^2.*

The intent of the analyses is to demonstrate that the pressure reduction capacity of the RHR containment spray system operating in the containment spray mode is adequate to maintain the primary containment conditions within the design limit.

The RHR containment spray system satisfies Criterion 3 of the NRC Policy Statement.

SURVEILLANCE REQUIREMENTS

SR 3.6.2.4.2

Verifying each associated RHR pump develops a flow rate ≥ 114 m^3/h ~~and less than 160 m^3/h~~ while operating in the wetwell spray mode with flow through the heat exchanger (operating in the suppression pool cooling mode) ensures that pump performance has not degraded during the cycle. Flow is a normal test of centrifugal pump performance required by Section XI of the ASME Code (Ref. 2). This test confirms one point on the pump design curve and is indicative of overall performance. Such inservice inspections confirm component OPERABILITY, trend performance, and detect incipient failures by indicating abnormal performance. In addition, verifying that the wetwell spray flow ensures that the assumptions for minimum flow for bypass leakage mitigation and the maximum flow for wetwell negative pressure evaluation in the Reference 1 analyses remain valid. The Frequency of this SR is 92 days.

B 3.6 CCONTAINMENT SYSTEMS

B 3.6.3.1 Primary Containment Hydrogen Recombiners

BASES

The information in this section of the reference ABWR DCD, including all subsections and figures, is incorporated by reference with the following departure.

STD DEP T1 2.14-1

The ABWR hydrogen recombiner elimination evaluation was provided in ABWR Licensing Topical Report (LTR) NEDO-33330P "Hydrogen Recombiner Requirements Elimination," dated May 2007. The information from pages C-121 through C-126 is incorporated by reference.

B 3.6 CONTAINMENT SYSTEMS

B 3.6.3.2 Primary Containment Oxygen Concentration

BASES

The information in this section of the reference ABWR DCD, including all subsections and figures, is incorporated by reference with the following departure.

STD DEP T1 2.14-1

The ABWR hydrogen recombiner elimination evaluation was provided in ABWR Licensing Topical Report (LTR) NEDO-33330P "Hydrogen Recombiner Requirements Elimination," dated May 2007. The information from pages C-127 and C-128 is incorporated by reference.

B 3.6 CONTAINMENT SYSTEMS

B 3.6.4.1 Secondary Containment

BASES

The information in this section of the reference ABWR DCD, including all subsections, is incorporated by reference with the following departures.

STD DEP 16.3-29

STD DEP 16.3-30

APPLICABILITY

In MODES 1, 2, and 3, a LOCA could lead to a fission product release to primary containment that leaks to secondary containment. Therefore, secondary containment OPERABILITY is required during the same operating conditions that require primary containment OPERABILITY.

In MODES 4 and 5, the probability and consequences of the LOCA are reduced due to the pressure and temperature limitations in these MODES. Therefore, maintaining secondary containment OPERABLE is not required in MODE 4 or 5 to ensure a control volume, except for other situations for which significant releases of radioactive material can be postulated, such as during operations with a potential for draining the reactor vessel (OPDRVs), during CORE ALTERATIONS, or during movement of irradiated fuel assemblies in ~~the primary or~~ secondary containment.

BASES

STD DEP 16.3-29

SURVEILLANCE *SR 3.6.4.1.4 and SR 3.6.4.1.5*

The SGT System exhausts the secondary containment atmosphere to the environment through appropriate treatment equipment. To ensure that all fission products are treated, SR 3.6.4.1.4 verifies that the SGT System will rapidly establish and maintain a pressure in the secondary containment that is less than the lowest postulated pressure external to the secondary containment boundary. This is confirmed by demonstrating that one SGT subsystem will draw down the secondary containment to ≥ 6.4 mm of water gauge vacuum in ≤ ~~120 seconds~~ 20 minutes. This cannot be accomplished if the secondary containment boundary is not intact. SR 3.6.4.1.5 demonstrates that one SGT subsystem can maintain ≥ 6.4 mm of water gauge vacuum for 1 hour at a flow rate ≤ 6800 m^3/h. The 1 hour test period allows secondary containment to be in thermal equilibrium at steady state conditions. Therefore, these two tests are used to ensure secondary containment boundary integrity. Since these SRs are secondary containment tests, they need not be performed with each SGT subsystem. The SGT subsystems are tested on a STAGGERED TEST BASIS, however, to ensure that in addition to the requirements of LCO 3.6.4.3, either SGT subsystem will perform this test. The 18 month Frequency is based on the need to perform this Surveillance under the conditions that apply during a plant outage and the potential for an unplanned transient if the Surveillance were performed with the reactor at power. Operating experience has shown these components usually pass the Surveillance when performed at the 18 month Frequency. Therefore, the Frequency was concluded to be acceptable from a reliability standpoint.

B 3.6 CONTAINMENT SYSTEMS

B 3.6.4.2 Secondary Containment Isolation valves (SCIVs)

BASES

The information in this section of the reference ABWR DCD, including all subsections, is incorporated by reference with no departures or supplements.

B 3.6 CONTAINMENT SYSTEMS

B 3.6.4.3 Standby Gas Treatment (SGT) System

BASES

The information in this section of the reference ABWR DCD, including all subsections, is incorporated by reference with the following departure and site-specific supplement. The site-specific supplement partially addresses COL License Information Item 16.1.

STD DEP 16.3-31

REFERENCES

1. *10 CFR 50, Appendix A, GDC 41.*
2. *DCD Tier 2, Section ~~6.2.3~~*6.5.1.
3. *DCD Tier 2, Section 15.6.5.*
4. *DCD Tier 2, Section 15.7.4.*
5. *Regulatory Guide 1.52, Rev. ~~[2]~~.*

B 3.7 PLANT SYSTEMS

B 3.7.1 Reactor Building Cooling Water (RCW) System, Reactor Service Water (RSW) System and Ultimate Heat Sink-Operating

BASES

The information in this section of the reference ABWR DCD, including all subsections, is incorporated by reference with the following departure and site-specific supplements. The site-specific supplements partially address COL License Information Item 16.1.

STD DEP 16.3-16

BACKGROUND

The UHS ~~*is*~~ includes a water storage basin that is a common structure for both units but the basin has a dedicated compartment for each unit. Each UHS compartment ~~*[a spray pond with six spray networks. Two spray networks are assigned to each UHS division and are mechanically separated from the other divisonal networks. The networks and their supply piping are suspended above the pond surface on reinforced concrete columns*~~] includes three mechanically and electrically independent cooling tower divisions designed to remove heat from the respective RCW/RSW division. Each unit's UHS structure consists of six cooling tower cells, of which two cells are dedicated to each of the three UHS divisions. During normal plant operation, all three divisions are in service with one cooling tower cell per division in operation. ~~*The [spray pond]*~~ Each unit's UHS basin compartment *is sized such that sufficient water inventory is available for all RCW/RSW System post LOCA cooling requirements for a 30 day period with no external makeup water source available (Regulatory Guide 1.27, Ref. 1). Normal makeup for* ~~*the [spray pond]*~~ each UHS basin compartment *is provided automatically by the* ~~*[power cycle heat sink makeup line]*~~ onsite well water.

Cooling water is pumped from the ~~*[spray pond]*~~ UHS basin *by the RSW pump(s) to the RCW/RSW heat exchangers through the three main redundant supply headers (Divisions A, B and C). In a separate closed loop, cooling water is circulated by the pump(s) in each RCW division through the essential components to be cooled and back through the RCW/RSW heat exchangers. Thus, the heat removed from the components by the RCW is transferred to the RSW, and then ultimately rejected to the UHS.*

Divisions A, B and C supply cooling water to redundant equipment required for a safe reactor shutdown. Additional information on the design and operation of the RCW/RSW System and UHS along with the specific equipment for which the RCW/RSW System supplies cooling water is provided in Sections 9.2.11 and 9.2.15 and Tables 9.2-4A, B, and C (Refs. 2 and 3, respectively). The combined three division RCW/RSW System is designed to withstand a single active or passive failure coincident with a loss of offsite power, without losing the capability to supply adequate cooling water to equipment required for safe reactor shutdown.

BASES

Following a DBA or transient, the RCW/RSW System [and UHS cooling tower fans] *will operate automatically without operator action. Manual initiation of supported systems is, however, performed for some cooling operations (e.g., shutdown cooling).*

LCO

The OPERABILITY of Divisions A, B and C of the RCW/RSW System is required to ensure the effective operation of the RHR System in removing heat from the reactor, and the effective operation of other safety related equipment during a DBA or transient. Requiring all three divisions to be OPERABLE ensures that two divisions will be available to provide adequate capability to meet cooling requirements of the equipment required for safe shutdown in the event of a single failure.

A division is considered OPERABLE when:

a. *All four associated RCW/RSW pumps are OPERABLE;*

b. *All three RCW/RSW heat exchangers are OPERABLE;*

c. *The associated UHS* with two cooling tower cells *is OPERABLE; and*

d. *The associated piping, valves, instrumentation, and controls required to perform the safety related function are OPERABLE.*

OPERABILITY of the UHS is based on a maximum RSW water temperature of [33.3]°C at the inlet to the RCW/RSW heat exchangers with OPERABILITY of each division requiring a minimum water level at or above elevation ~~[mean sea level (equivalent to an indicated level of ≥ [ ] m) and six OPERABLE spray networks]~~ 13.56 m MSL and six OPERABLE cooling tower cells. *The maximum RSW water temperature of [33.3]°C will insure that the peak temperature at the inlet to the RCW/RSW heat exchangers will not exceed the designed value of 35°C during a LOCA.*

The isolation of the RCW/RSW System to components or systems may render those components or systems inoperable, but does not affect the OPERABILITY of the RCW/RSW System.

BASES

ACTIONS

A.1

If one RCW pump and/or one RSW pump and/or one RCW/RSW heat exchanger and/or one ~~[spray network]~~ cooling tower cell *in the UHS in the same division is inoperable, action must be taken to restore the inoperable component(s), and thus the division affected, to OPERABLE status within 14 days. In this condition sufficient equipment is still available to provide cooling water to the required safety related components and sufficient heat removal capacity is still available to adequately cool safety related loads, even assuming the worst case single failure. Therefore, continued operation for a limited time is justified.*

B.1 and B.2

If one RCW/RSW division or both ~~[spray network]~~ cooling tower cells *in one UHS division is inoperable for reasons other than Condition A, then, immediately, those required feature(s) supported by the inoperable RCW/RSW division must be declared inoperable (e.g., Emergency Diesel Generator, RHR heat exchanger, etc.) and the applicable Conditions and Required Actions of the appropriate LCOs for the inoperable required feature(s) must be entered. For example, applicable Conditions of LCO 3.8.1, "AC Sources-Operating," LCO 3.4.7, "Residual Heat Removal (RHR) Shutdown Cooling System-Hot Shutdown," LCO 3.4.1, "Reactor Internal Pumps (RIP) Operating," LCO 3.6.1.5, "Drywell Air Temperature", LCO 3.6.2.3, "Suppression Pool Cooling," and LCO 3.6.2.4, "Containment Spray" be entered and the Required Actions taken if the inoperable RCW/RSW division results in an inoperable DG, RHR shutdown cooling, RIPS, drywell temperature increase due to inoperable drywell coolers, RHR suppression pool cooling, and RHR containment spray, respectively. This is in accordance with LCO 3.0.6 and ensures the proper actions are taken for these components.*

Additionally, immediate action must be taken to restore the inoperable RCW/RSW division or UHS ~~[spray networks]~~ cooling tower cells *to OPERABLE status. This is consistent with the Required Actions of the applicable LCOs for those support feature(s) declared inoperable as a result of the inoperable RCW/RSW division.*

STD DEP 16.3-16

C.1 ~~and C.2~~

If one RCW pump and/or one RSW pump and/or one RCW/RSW heat exchanger and/or one UHS ~~[spray network]~~ cooling tower cell *in the same division is inoperable in two or more separate divisions, one RCW/RSW or UHS ~~[spray network]~~* cooling tower *division must be restored to OPERABLE status within 7 days~~and two RCW/RSW or UHS [spray network] divisions must be restored to OPERABLE status in 14 days~~. In this condition sufficient equipment is still available to provide cooling water to the required safety related components and*

sufficient heat removal capacity is still available to adequately cool safety related loads. Therefore, continued operation for a limited time is justified. However, in the degraded mode of this Condition, overall reliability and heat removal capability is reduced from that of Condition A, and thus a more restrictive Completion Time is imposed.

The 7 ~~and 14~~ day Completion Time~~s~~ ~~are~~ is *reasonable, based on the low probability of an accident occurring during the period that one or more redundant components are inoperable in one or more divisions, the number of available redundant divisions, the substantial cooling capability still remaining in divisions in this Condition, and the expected high division availability afforded by a system where most of the equipment, including the minimum required for most functions, is normally operating. The~~se~~ Completion Time~~s~~ ~~are~~* is *also based on PRA sensitivity studies (Ref. 8).*

D.1 and D.2

If the RCW/RSW division cannot be restored to OPERABLE status within the associated Completion Time, or two or more RCW/RSW divisions are inoperable for reasons other than Condition C, or the UHS is determined inoperable, or two or more UHS ~~[spray network]~~ cooling tower *divisions are inoperable for reasons other than Condition C, the unit must be placed in a MODE in which the LCO does not apply. To achieve this status, the unit must be placed in at least MODE 3 within 12 hours and in MODE 4 within 36 hours. The allowed Completion Times are reasonable, based on operating experience, to reach the required unit conditions from full power conditions in an orderly manner and without challenging unit systems.*

SURVEILLANCE REQUIREMENTS

SR 3.7.1.1

This SR ensures adequate long term (30 days) cooling can be maintained. With the UHS water source below the minimum level, the affected RCW/RSW division must be declared inoperable. The 24 hour Frequency is based on operating experience related to trending of the parameter variations during the applicable MODES.

SR 3.7.1.2

This SR verifies the water level in each RSW pump well of the ~~intake structure~~ UHS basin *to be sufficient for the proper operation of the RSW pumps (net positive suction head and pump vortexing are considered in determining this limit). The 24 hour Frequency is based on operating experience related to trending of the parameter variations during the applicable MODES.*

SR 3.7.1.3

Verification of the RSW water temperature at the inlet to the RCW/RSW heat exchanger ensures that the heat removal capability of the RCW/RSW System is within the assumptions of the DBA analysis. The 24 hour Frequency is based on operating experience related to trending of the parameter variations during the applicable MODES.

SR 3.7.1.4

Operating each cooling tower cell fan for ≥ 15 minutes ensures that all fans are OPERABLE and that all associated controls are functioning properly. It also ensures that fan or motor failure, or excessive vibration can be detected for corrective action. The 31 day Frequency is based on operating experience, the known reliability of the fan units, the redundancy available, and the low probability of significant degradation of the cooling tower fans occurring between Surveillances.

SR 3.7.1.~~4~~5

Verifying the correct alignment for each manual, power operated, and automatic valve in each RCW/RSW and associated UHS ~~[spray network]~~ cooling tower *division flow path provides assurance that the proper flow paths will exist for RCW/RSW operation. This SR does not apply to valves that are locked, sealed, or otherwise secured in position, since these valves were verified to be in the correct position prior to locking, sealing, or securing. A valve is also allowed to be in the nonaccident position and yet considered in the correct position, provided it can be automatically realigned to its accident position. This SR does not require any testing or valve manipulation; rather, it involves verification that those valves capable of potentially being mispositioned are in the correct position. This SR does not apply to valves that cannot be inadvertently misaligned, such as check valves.*

This SR is modified by a Note indicating that isolation of the RCW/RSW System to components or systems may render those components or systems inoperable, but does not affect the OPERABILITY of the RCW/RSW System. As such, when all RCW/RSW pumps, valves, and piping are OPERABLE, but a branch connection off of the main header is isolated, the RCW/RSW System is still OPERABLE. The 31 day Frequency is based on engineering judgment, is consistent with the procedural controls governing valve operation, and ensures correct valve positions.

SR 3.7.1.~~5~~6

This SR verifies the automatic isolation valves of the RCW/RSW System will automatically switch to the safety or emergency position to provide cooling water exclusively to the safety related equipment, and limited non-safety related equipment, during an accident event. This is demonstrated by use of an actual or simulated initiation signal. This SR also verifies the automatic start capability of the RCW/RSW pumps that are in standby and automatic valving in each of the standby RCW/RSW heat exchangers and associated UHS [~~spray network~~ cooling tower cell*] in each division. SRs in LCO 3.3.1.1 and LCO 3.3.1.4 overlap this SR to provide complete testing of the safety function.*

Operating experience has shown that these components usually pass the SR when performed on the 18 month Frequency. Therefore, this Frequency is concluded to be acceptable from a reliability standpoint.

B 3.7 PLANT SYSTEMS

B 3.7.2 Reactor Building Cooling Water (RCW) System, Reactor Service Water (RSW) System and Ultimate Heat Sink-Shutdown

BASES

The information in this section of the reference ABWR DCD, including all subsections, is incorporated by reference with the following departures and site-specific supplement. The site-specific supplement partially addresses COL License Information Item 16.1.

STD DEP 16.3-16
STD DEP 16.3-46

APPLICABLE SAFETY ANALYSES

The volume of water incorporated in the UHS is sized so that sufficient water inventory is available for all RCW/RSW System post LOCA cooling requirements for a 30 day period with no Additional makeup water source available (Ref. 1). The ability of the RCW/RSW System to support long term cooling of the reactor or containment is assumed in evaluations of the equipment required for safe reactor shutdown presented in DCD Tier 2, Sections 9.2.11, 9.2.15 6.2.1.1.3.3.1.4, and Chapter 15, (Refs 2, 3, and 4, respectively). The long term cooling analyses following a design basis LOCA demonstrates that only two divisions of the RCW/RSW System is required, post LOCA, to support long term cooling of the reactor or containment. To provide redundancy, a minimum of three RCW/RSW divisions are required to be OPERABLE in MODE~~S~~ 4 and MODE *5 ~~except~~ with ~~the reactor cavity to dryer/separator storage pool gate removed~~* irradiated fuel in the reactor pressure vessel *and ~~water level ≥ 7.0 m~~* water level < 7.0 m *over the top of the reactor pressure vessel flange.*

The combined RCW/RSW System, together with the UHS, satisfy

Criterion 3 of the NRC Policy Statement.

STD DEP 16.3-46

APPLICABILITY

In MODE~~S~~ 4 and MODE *5~~, except with the reactor cavity to dryer/separator storage pool gate removed~~ with* irradiated fuel in the reactor pressure vessel *and ~~water level ≥ 7.0 m~~* water level < 7.0 m *over the top of the reactor pressure vessel flange, three divisions of the RCW/RSW System and the UHS are required to be OPERABLE to support OPERABILITY of the equipment serviced by the RCW/RSW System and UHS, and are required to be OPERABLE in these MODES.*

In MODES 1, 2, and 3, the OPERABILITY requirements of the RCW/RSW System and UHS are specified in LCO 3.7.1.

In MODE 5 with ~~the reactor cavity to dryer/separator storage pool gate removed~~ irradiated fuel in the reactor pressure vessel and water level ≥ 7.0 m over the top of the reactor pressure vessel flange, the OPERABILITY requirements of the RCW/RSW System and UHS are specified in LCO 3.7.3, "RCW/RSW System and UHS – Refueling."

BASES

STD DEP 16.3-16

ACTIONS

A. 1~~,~~ and *B. 1* ~~*and B. 2*~~

If one RCW pump and/or one RSW pump and/or one RCW/RSW heat exchanger and/or one ~~*[spray network]*~~ cooling tower cell *in the UHS in the same division is inoperable, action must be taken to restore the inoperable component(s) and thus the division affected, to OPERABLE status within 14 days. If one RCW pump and/or one RSW pump and/or one RCW/RSW heat exchanger and/or one UHS* ~~*[spray network]*~~ cooling tower *in the same division is inoperable in two or more separate divisions, one RCW/RSW or UHS* ~~*[spray network]*~~ cooling tower cell *division must be restored to OPERABLE status within 7 days and two RCW/RSW or UHS* ~~*[spray network]*~~ cooling tower *divisions must be restored to OPERABLE status in 14 days. In these conditions sufficient redundant equipment is still available to provide cooling water to the required safety related components and sufficient heat removal capacity is still available to adequately cool safety related loads. Therefore, continued operability of these divisions is justified.*

The Completion Times are reasonable, based on the low probability of an accident occurring while one or more components are inoperable in one or more divisions, the number of available divisions, the substantial cooling capability still remaining in a division(s) in this Condition, and the expected high division availability afforded by a system where most of the equipment, including the minimum required for most functions, is normally operating. However, in the degraded mode of Condition B, overall reliability and heat removal capability is reduced from that of Condition A, and thus a more restrictive Completion Time is imposed.

C.1

If the RCW/RSW or UHS ~~*[spray network]*~~ cooling tower *division(s) cannot be restored to OPERABLE status within the associated Completion Time(s), or one or more required RCW/RSW or UHS* ~~*[spray network]*~~ cooling tower *division(s) are inoperable for reasons other than Condition A or B or the UHS is inoperable, then immediately, those required feature(s) supported by the inoperable RCW/RSW division(s) or the UHS must be declared inoperable (i.e., Emergency Diesel Generator, RHR heat exchanger) and the applicable Conditions and Required Actions of the appropriate LCOs for the inoperable required feature(s) must be entered. For the applicable shutdown MODES, an inoperable RCW/RSW division or UHS requires entering the Conditions of LCO 3.8.11, "AC Sources-Shutdown (Low Water Level)," for a diesel generator made inoperable and either LCO 3.4.8, "Residual Heat Removal (RHR) Shutdown Cooling System – Cold Shutdown," or LCO 3.9.8, "Residual Heat Removal (RHR) Low Water Level" for RHR shutdown cooling made inoperable. This is in accordance with LCO 3.0.6 and ensures the proper actions are taken for these components.*

BASES

SURVEILLANCE REQUIREMENTS

SR 3.7.2.3

Verification of the RSW water temperature at the inlet to the RCW/RSW heat exchanger ensures that the heat removal capability of the RCW/RSW System is within the assumptions of the DBA analysis. The 24 hour Frequency is based on operating experience related to trending of the parameter variations during the applicable MODES.

SR 3.7.2.4

Operating each cooling tower cell fan for ≥ 15 minutes ensures that all fans are OPERABLE and that all associated controls are functioning properly. It also ensures that fan or motor failure, or excessive vibration can be detected for corrective action. The 31 day Frequency is based on operating experience, the known reliability of the fan units, the redundancy available, and the low probability of significant degradation of the cooling tower fans occurring between Surveillances.

SR 3.7.2.~~4~~5

Verifying the correct alignment for each manual, power operated, and automatic valve in each RCW/RSW and associated UHS ~~[spray network]~~ cooling tower *division flow path provides assurance that the proper flow paths will exist for RCW/RSW operation. This SR does not apply to valves that are locked, sealed, or otherwise secured in position, since these valves were verified to be in the correct position prior to locking, sealing, or securing. A valve is also allowed to be in the nonaccident position and yet considered in the correct position, provided it can be automatically realigned to its accident position. This SR does not require any testing or valve manipulation; rather, it involves verification that those valves capable of potentially being mispositioned are in the correct position. This SR does not apply to valves that cannot be inadvertently misaligned, such as check valves.*

This SR is modified by a Note indicating that isolation of the RCW/RSW System to components or systems may render those components or systems inoperable, but does not affect the OPERABILITY of the RCW/RSW System. As such, when all RCW/RSW pumps, valves, and piping are OPERABLE, but a branch connection off of the main header is isolated, the RCW/RSW System is still OPERABLE. The 31 day Frequency is based on engineering judgment, is consistent with the procedural controls governing valve operation, and ensures correct valve positions.

BASES

SR 3.7.2.~~5~~6

This SR verifies that the automatic isolation valves of the RCW/RSW System will automatically switch to the safety or emergency position to provide cooling water exclusively to the safety related equipment, and limited non-safety related equipment, during an accident event. This is demonstrated by use of an actual or simulated initiation signal. This SR also verifies the automatic start capability of the RCW/RSW pumps that are in standby and automatic valving in each of the standby RCW/RSW heat exchangers and associated UHS [~~spray network~~ cooling tower cell*] in each division. SRs in LCO 3.3.1.1 and LCO 3.3.1.4 overlap this SR to provide complete testing of the safety function.*

Operating experience has shown that these components usually pass the SR when performed on the 18 month Frequency. Therefore, this Frequency is concluded to be acceptable from a reliability standpoint.

B 3.7 PLANT SYSTEMS

B 3.7.3 Reactor Building Cooling Water (RCW) System, Reactor Service Water (RSW) System and Ultimate Heat Sink-Refueling

BASES

The information in this section of the reference ABWR DCD, including all subsections, is incorporated by reference with the following departures and site-specific supplement. The site-specific supplement partially addresses COL License Information Item 16.1.

STD DEP 16.3-46

BACKGROUND

A description of the RCW and RSW Systems and the UHS are provided in the Bases for LCO 3.7.1, "Reactor Building Cooling Water (RCW) System, Reactor Service Water (RSW) System and Ultimate Heat Sink (UHS) – Operating." In MODE 5 with irradiated fuel in the reactor pressure vessel and *the reactor vessel water level ≥ 7.0 m over the vessel flange the unit components to which the RCW/RSW System is required to supply cooling water is greatly reduced from normal operation. For example, LCO 3.8.2, "AC Sources – Refueling" and LCO 3.9.7, "RHR-High Water Level" require one DG and one RHR subsystem to be OPERABLE, respectively~~, and LCO 3.5.2, "ECCS-Shutdown" does not require any ECCS components to be OPERABLE for this condition~~.*

APPLICABLE SAFETY ANALYSES

The volume of water incorporated in the UHS is sized so that sufficient water inventory is available for all RCW/RSW System post LOCA cooling requirements for a 30 day period with no additional makeup water source available (Ref. 1). The ability of the RCW/RSW System to support long term cooling of the reactor or containment is assumed in evaluations of the equipment required for safe reactor shutdown presented in DCD Tier 2, Sections 9.2.11, 9.2.15, 6.2.1.1.3.3.1.4, and Chapter 15, (Refs 2, 3, and 4, respectively). With the unit in MODE 5 ~~and~~ with irradiated fuel in the reactor pressure vessel *~~the reactor cavity to dryer/separator storage gate removed~~ and water level ≥ 7.0 m over the top of the reactor pressure vessel flange, the volume of water in the reactor vessel provides a heat sink for decay heat removal. However, to provide redundancy, a minimum of one RCW/RSW division is required to be OPERABLE.*

The combined RCW/RSW System, together with the UHS, satisfies Criterion 3 of the NRC Policy Statement.

LCO

One division of the RCW/RSW System and the UHS are required to be OPERABLE to ensure the effective operation of the RHR System in removing heat from the reactor. LCO 3.9.7, "RHR – High Water Level" requires that one RHR subsystem be OPERABLE and in operation in MODE 5 with irradiated fuel in the reactor pressure vessel and *with the water level ≥ 7.0 m above the RPV flange. Only one subsystem is required because the volume of water above the*

BASES

RPV flange provides backup decay heat removal capability. Operability of the UHS and the RCW/RSW System is defined in the Basis for LCO 3.7.1.

APPLICABILITY

In MODE 5 with irradiated fuel in the reactor pressure vessel ~~*the reactor cavity to dryer/separator storage pool gate removed*~~ *and water level ≥ 7.0 m over the top of the reactor pressure vessel flange, one division of the RCW/RSW System and the UHS are required to be OPERABLE to support OPERABILITY of the equipment serviced by the RCW/RSW System and UHS, and are required to be OPERABLE in this MODE.*

In MODES 1, 2, and 3, the OPERABILITY requirements of the RCW/RSW System and UHS are specified in LCO 3.7.1.

In MODE~~*S*~~ *4 and* MODE 5~~*, except with the reactor cavity to dryer/separator storage pool gate removed and*~~ with ~~*water level ≥ 7.0 m*~~ water level < 7.0 m *over the top of the reactor pressure vessel flange, the OPERABILITY requirements of the RCW/RSW System and UHS are specified in LCO 3.7.2, "RCW/RSW System and UHS – Shutdown."*

ACTIONS

A. 1. and A. 2

If no RCW/RSW division is operable or the UHS is inoperable, or the associated ~~*divisonal*~~ *UHS* ~~*[spray networks]*~~ cooling tower cells *are inoperable, then, immediately, those required feature(s) supported by the inoperable required RCW/RSW division or UHS must be declared inoperable (i.e., Emergency Diesel Generator, RHR heat exchanger) and the applicable Conditions and Required Actions of the appropriate LCOs for the inoperable required feature(s) must be entered. An inoperable RCW/RSW division or UHS requires entering the Conditions of LCO 3.8.2, "AC Sources – Refueling," for a diesel generator made inoperable and LCO 3.9.7, "Residual Heat Removal (RHR) – High Water Level" for RHR shutdown cooling made inoperable. This is in accordance with LCO 3.0.6 and ensures the proper actions are taken for these components.*

BASES

SURVEILLANCE REQUIREMENTS

SR 3.7.3.3

Verification of the RSW water temperature at the inlet to the RCW/RSW heat exchangers ensures that the heat removal capability of the RCW/RSW System is within the assumptions of the DBA analysis. The 24 hour Frequency is based on operating experience related to trending of the parameter variations during the applicable MODES.

SR 3.7.3.4

Operating each cooling tower cell fan for ≥ 15 minutes ensures that all fans are OPERABLE and that all associated controls are functioning properly. It also ensures that fan or motor failure, or excessive vibration can be detected for corrective action. The 31 day Frequency is based on operating experience, the known reliability of the fan units, the redundancy available, and the low probability of significant degradation of the cooling tower fans occurring between Surveillances.

~~*SR 3.7.3.4*~~ SR 3.7.3.5

Verifying the correct alignment for each manual, power operated, and automatic valve in each RCW/RSW and associated UHS ~~[spray network]~~ cooling tower *division flow path provides assurance that the proper flow paths will exist for RCW/RSW operation. This SR does not apply to valves that are locked, sealed, or otherwise secured in position, since these valves were verified to be in the correct position prior to locking, sealing, or securing. A valve is also allowed to be in the nonaccident position and yet considered in the correct position, provided it can be automatically realigned to its accident position. This SR does not require any testing or valve manipulation; rather, it involves verification that those valves capable of potentially being mispositioned are in the correct position. This SR does not apply to valves that cannot be inadvertently misaligned, such as check valves.*

This SR is modified by a Note indicating that isolation of the RCW/RSW System to components or systems may render those components or systems inoperable, but does not affect the OPERABILITY of the RCW/RSW System. As such, when all RCW/RSW pumps, valves, and piping are OPERABLE, but a branch connection off of the main header is isolated, the RCW/RSW System is still OPERABLE.

The 31 day Frequency is based on engineering judgment, is consistent with the procedural controls governing valve operation, and ensures correct valve positions.

BASES

~~*SR 3.7.3.5*~~ SR 3.7.3.6

This SR verifies that the automatic isolation valves of the RCW/RSW System will automatically switch to the safety or emergency position to provide cooling water exclusively to the safety related equipment, and limited non-safety related equipment, during an accident event. This is demonstrated by use of an actual or simulated initiation signal. This SR also verifies the automatic start capability of the RCW/RSW pumps that are in standby and automatic valving in each of the standby RCW/RSW heat exchangers and associated UHS [~~spray network~~ cooling tower cell] *in each division. ~~The LOGIC SYSTEM FUNCTIONAL TEST in SR 3.3.5.1.4~~* SRs in LCO 3.3.1.1 and LCO 3.3.1.4 *overlap this SR to provide complete testing of the safety function.*

Operating experience has shown that these components usually pass the SR when performed on the 18 month Frequency. Therefore, this Frequency is concluded to be acceptable from a reliability standpoint.

B 3.7 PLANT SYSTEMS

B 3.7.4 Control Room Habitability Area (CRHA)-Emergency Filtration (EF) System

BASES

The information in this section of the reference ABWR DCD, including all subsections, is incorporated by reference with the following departures.

STD DEP 16.3-47

STD DEP 16.3-48

BACKGROUND

STD DEP 16.3-48

The Emergency Filtration System of the CRHA HVAC System, provides a radiologically controlled environment from which the unit can be safely operated following a Design Basis Accident (DBA).

The safety related function of the Emergency Filtration System used to control radiation exposure consists of two independent and redundant high efficiency air filtration divisions for treatment of a mixture of recirculated air and a minimum of outside air supplied for pressurization of the main control area envelope (MCAE). Each division consists of an electric heater, a prefilter, a high efficiency particulate air (HEPA) filter, an activated charcoal adsorber section, a second HEPA filter, ~~a fan~~ two 100% capacity fans*, and the associated ductwork and dampers. The electric heater limits the relative humidity of the influent air stream to less than 70% relative humidity. Prefilters and HEPA filters remove particulate matter that may be radioactive. The charcoal adsorbers provide a holdup period for gaseous iodine, allowing time for decay. The second HEPA filter collects any carbon fines exhausted from the adsorber.*

LCO

Two redundant divisions of the Emergency Filtration System are required to be OPERABLE to ensure that at least one is available, assuming a single failure disables the other division. Total system failure could result in exceeding a dose of 0.05 Sv to the control room operators in the event of a DBA.

The Emergency Filtration System is considered OPERABLE when the individual components necessary to control operator exposure are OPERABLE in both divisions. A division is considered OPERABLE when its associated:

BASES

STD DEP 16.3-48

a. Fan is OPERABLE (one of the two fans)*;*

b. HEPA filter and charcoal adsorber are not excessively restricting flow and are capable of performing their filtration functions; and

c. Heater, ductwork, valves, and dampers are OPERABLE, and air circulation can be maintained.

SURVEILLANCE REQUIREMENTS

SR 3.7.4.4

STD DEP 16.3-47

This SR verifies the integrity of the MCAE and the assumed inleakage rates of potentially contaminated air. The control room positive pressure, with respect to potentially contaminated adjacent spaces, is periodically tested to verify proper function of the Emergency Filtration System. During the emergency mode of operation, the Emergency Filtration System is designed to slightly pressurize the control room to ≥ 3.2 mm water gauge positive pressure with respect to the atmosphere to prevent unfiltered inleakage. The Emergency Filtration System is designed to maintain this positive pressure at a flow rate of ≤ ~~360~~ 3400 m^3/h @ 0.101 MPa, 0°C to the MCAE in the emergency filtration mode. The Frequency of 18 months on a STAGGERED TEST BASIS is consistent with industry practice and other filtration system SRs.

B 3.7 PLANT SYSTEMS

B 3.7.5 Control Room Habitability Area (CRHA)-Air Conditioning (AC) System

BASES

The information in this section of the reference ABWR DCD, including all subsections, is incorporated by reference with the following departure.

STD DEP 16.3-76

SURVEILLANCE REQUIREMENTS

SR 3.7.5.2

This SR verifies that each CRHA AC division starts and operates on a low flow signal from the operating Emergency Filtration Unit. The LOGIC SYSTEM FUNCTIONAL TEST in SR 3.3.7.1.4 overlaps this SR to provide complete testing of the safety function. The 18 month Frequency is appropriate since significant degradation of the CRHA AC System is not expected over this time period.

B 3.7 PLANT SYSTEMS

B 3.7.6 Main Condenser Offgas

BASES

The information in this section of the reference ABWR DCD, including all subsections, is incorporated by reference with the following departure.

STD DEP 16.3-75

BACKGROUND

During unit operation, steam from the low pressure turbine is exhausted directly into the condenser. Air and noncondensible gases are collected in the condenser, then exhausted through the steam jet air ejectors (SJAEs) to the Main Condenser Offgas System. The offgas from the main condenser normally includes radioactive gases.

The Main Condenser Offgas System has been incorporated into the unit design to reduce the gaseous radwaste emission. This system uses a catalytic recombiner to recombine radiolytically dissociated hydrogen and oxygen. The gaseous mixture is cooled by the offgas condenser; the water and condensibles are stripped out by the offgas condenser and moisture separator. The radioactivity of the remaining gaseous mixture (i.e., the offgas recombiner effluent) is monitored downstream of the moisture separator prior to entering the ~~holdup line~~ charcoal adsorber vault.

B 3.7 PLANT SYSTEMS

B 3.7.7 Main Turbine Bypass System

BASES

The information in this section of the reference ABWR DCD, including all subsections, is incorporated by reference with the following supplement. The site-specific supplement partially addresses COL License Information Item 16.1.

SURVEILLANCE REQUIREMENTS

SR 3.7.7.3

This SR ensures that the TURBINE BYPASS SYSTEM RESPONSE TIME is in compliance with the assumptions of the appropriate safety analysis. The response time limits are specified in ~~[unit specific documentation]~~ the Technical Requirements Manual (Ref. 4). *The 18 month Frequency is based on the need to perform this Surveillance under the conditions that apply during a unit outage and because of the potential for an unplanned transient if the Surveillance were performed with the reactor at power. Operating experience has shown the 18 month Frequency, which is based on the refueling cycle, is acceptable from a reliability standpoint and is also based on a reliability analysis in Reference 3.*

REFERENCES

1. *DCD Tier 2, Section 7.7.1.8.*

2. *DCD Tier 2, Chapter 15.*

3. *Letter, Jack Fox to Chet Poslusny, "Submittal Supporting Accelerated ABWR Review Schedule-Revised LCO 3.7.5", Docket No. STN 52-001, May 19, 1993.*

4. Technical Requirements Manual.

B 3.7 PLANT SYSTEMS

B 3.7.8 Fuel Pool Water Level

BASES

The information in this section of the reference ABWR DCD, including all subsections, is incorporated by reference with no departures or supplements.

B 3.8 ELECTRICAL POWER SYSTEMS

B 3.8.1 AC Sources-Operating

BASES

The information in this section of the reference ABWR DCD, including all subsections and figures, is incorporated by reference with the following departures.

STD DEP 8.3-1

STD DEP 16.3-80

STD DEP 8.3-1

The ABWR plant medium voltage electrical system design change was provided in ABWR Licensing Topical Report (LTR) NEDO-33335 "Plant Medium Voltage Electrical System Design," Rev. 0, dated May 2007. LTR pages B 3.8-1 - 5, 9, 10, 13, 18, 19, 20, 21 and 25 are incorporated by reference.

STD DEP 16.3-80

ACTIONS

The 15-day Completion Time provides a limit on the time allowed in a specified condition after discovery of failure to meet the LCO. This limit is considered reasonable for situations in which Conditions B and C are entered

~~D.1 and D.2~~

concurrently. The "AND" connector between the 14-day and 15-day Completion Times means that both Completion Times apply simultaneously, and the more restrictive must be met.

As in Required Action C.2, the 15-day Completion Time of Required Action C.5 allows for an exception to the normal "time zero" for beginning the allowed outage time "clock." This exception results in establishing the "time zero" at the time the LCO was initially not met, instead of the time Condition C was entered.

D.1 and D.2

Required Action D.1 addresses actions to be taken in the event of concurrent failure of redundant required features. Required Action D.1 reduces the vulnerability to a loss of function. The Completion Time for taking these actions is reduced to 12 hours from that allowed with only one division without offsite power (Required Action B.2).

B 3.8 ELECTRICAL POWER SYSTEMS

B 3.8.2 AC Sources-Refueling

BASES

The information in this section of the reference ABWR DCD, including all subsections, is incorporated by reference with the following departures.

STD DEP 8.3-1

STD DEP 16.3-40

STD DEP 8.3-1

The ABWR plant medium voltage electrical system design change was provided in ABWR Licensing Topical Report (LTR) NEDO-33335 "Plant Medium Voltage Electrical System Design," Rev. 0, dated May 2007. The information from the markup of ABWR TS 3.8-42 is incorporated by reference.

STD DEP 16.3-40

LCO *Each required DG must be capable of starting, accelerating to required speed and voltage, and connecting to its respective ESF bus on detection of bus undervoltage, and accepting required loads. This sequence must be accomplished within 20 seconds. Each DG must also be capable of accepting required loads within the assumed loading sequence intervals, and must continue to operate until offsite power can be restored to the ESF buses. These capabilities are required to be met from a variety of initial conditions such as: DG in standby with the engine hot, DG in standby* with engine at ambient conditions, and DG operating in *parallel test mode*.

B 3.8 ELECTRICAL POWER SYSTEMS

B 3.8.3 Diesel Fuel Oil, Lube Oil, and Starting Air Subsystem

BASES

The information in this section of the reference ABWR DCD, including all subsections, is incorporated by reference with the following departure.

STD DEP 16.3-51

BACKGROUND *Each DG has ~~an~~* redundant *air start* sub*system*s, each *with adequate capacity for five successive start attempts on the DG without recharging the air start receiver(s).* One subsystem with an OPERABLE air start receiver satisfies OPERABILITY requirements for its associated DG.

LCO *The starting air system is required to have a minimum capacity for five successive DG start attempts without recharging the air start receivers.* One subsystem with an OPERABLE air start receiver satisfies OPERABILITY requirements for its associated DG.

B 3.8 ELECTRICAL POWER SYSTEMS

B 3.8.4 DC Sources-Operating

BASES

The information in this section of the reference ABWR DCD, including all subsections, is incorporated by reference with the following departures.

STD DEP T1 3.4-1

STD DEP 16.3-42

STD DEP T1 3.4-1

ACTIONS *B.1 and B.2*

In Condition B, Division IV DC electrical power subsystem is inoperable. Required Actions B.1 allows 2 hours to declare affected required features inoperable so that appropriate actions are implemented in accordance with the affected required features of the LCOs' ACTIONS. Division IV is less critical than the other three DC electrical power subsystems because of its limited role in actuating safety related functions(i.e., ~~Essential Multiplex System~~ Data Communication Function *Div. IV, SSLC Div. IV sensor logic). Division IV does not feed or control any major mechanical components or systems.*

STD DEP 16.3-42

ACTIONS *D.1 and D.2*

If all inoperable DC electrical power subsystems cannot be restored to OPERABLE status within the associated Completion Times ~~for Required Actions A.1, B.2, and C.1 or C.2,~~ the unit must be brought to a MODE in which the LCO does not apply. To achieve this status, the plant must be brought to at least MODE 3 within 12 hours and to MODE 4 within 36 hours. The allowed Completion Times are reasonable, based on operating experience, to reach the required plant conditions from full power conditions in an orderly manner and without challenging plant systems. The Completion Time to bring the unit to MODE 4 is consistent with the time required in Regulatory Guide 1.93 (Ref. 7).

B 3.8 ELECTRICAL POWER SYSTEMS

B 3.8.5 DC Sources-Shutdown

BASES

The information in this section of the reference ABWR DCD, including all subsections, is incorporated by reference with no departures or supplements.

B 3.8 ELECTRICAL POWER SYSTEMS

B 3.8.6 Battery Cell Parameters

BASES

The information in this section of the reference ABWR DCD, including all subsections, is incorporated by reference with no departures or supplements.

B 3.8 ELECTRICAL POWER SYSTEMS

B 3.8.7 Inverters-Operating

BASES

The information in this section of the reference ABWR DCD, including all subsections, is incorporated by reference with the following departure.

STD DEP 8.3-1

The ABWR plant medium voltage electrical system design change was provided in ABWR Licensing Topical Report (LTR) NEDO-33335 "Plant Medium Voltage Electrical System Design," Rev. 0, dated May 2007. LTR page B 3.8-78 is incorporated by reference.

B 3.8 Electrical Power Systems

B 3.8.8 Inverters-Shutdown

BASES

The information in this section of the reference ABWR DCD, including all subsections, is incorporated by reference with the following departures.

STD DEP 16.3-52

STD DEP 8.3-1

STD DEP 16.3-52

APPLICABLE SAFETY ANALYSES	*The initial conditions of Design Basis Accident (DBA) and transient accident analyses in DCD Tier 2, Chapter 6 (Ref. 1) and Chapter 15 (Ref. 2), assume Engineered Safety Feature systems are OPERABLE. The inverters are designed to provide the required capacity, capability, redundancy, and reliability to ensure the availability of necessary power to the ~~Reactor Protection System (RPS) and Emergency Core Cooling Systems (ECCS) instrumentation and controls~~* Class 1E CVCF loads *so that the fuel, Reactor Coolant System, and containment design limits are not exceeded.*
LCO	*The inverters ensure the availability of AC electrical power for the ~~RPS and ECCS instrumentation and controls~~* Class 1E CVCF loads *required to shut down the reactor and maintain it in a safe condition after an anticipated operational occurrence or postulated DBA.*

STD DEP 8.3-1

The ABWR plant medium voltage electrical system design change was provided in ABWR Licensing Topical Report (LTR) NEDO-33335 “Plant Medium Voltage Electrical System Design ,” Rev. 0, dated May 2007. LTR page B 3.8-83 is incorporated by reference.

B 3.8 ELECTRICAL POWER SYSTEMS

B 3.8.9 Distribution Systems - Operating

BASES

The information in this section of the reference ABWR DCD, including all subsections and figures, is incorporated by reference with the following departures.

STD DEP 8.3-1

STD DEP 8.3-1

The ABWR plant medium voltage electrical system design change was provided in ABWR Licensing Topical Report (LTR) NEDO-33335 "Plant Medium Voltage Electrical System Design," Rev. 0, dated May 2007. LTR pages B 3.8-86, 88, and 96 are incorporated by reference.

BASES

Table B 3.8.9-1 (page 1 of 1)
AC, DC, and AC Vital Bus Electrical Power Distribution System

SYSTEM	BUS TYPE AND VOLTAGE	DIVISION 1*	DIVISION 2*	DIVISION 3*	DIVISION 4*
AC Buses	ESF Bus ~~6900~~**4.16 k**V	M/C ~~E~~**A3**	M/C ~~F~~**B3**	M/C ~~G~~**C3**	Not Applicable
	Power Center 480 V	P/C E10 P/C E20	P/C F10 P/C F20	P/C G10 P/C G20	
	Motor Control Center 480 V	C/B E110 C/B E111 C/B E112 C/B E113 C/B E120 C/B E260	C/B F110 C/B F111 C/B F112 C/B F113 C/B F120 C/B F260	C/B G110 C/B G111 C/B G112 C/B G113 C/B G120 C/B G260	
	Distribution Panel 120 V	IP A10 IP A20	IP B10 IP B20	IP C10 IP C20	
AC Vital Buses	CONSTANT VOLTAGE, CONSTANT FREQUENCY DISTRIBUTION PANEL 120 V	A11 A21	B11 B21	C11 C~~12~~**21**	D11*** D~~12~~**21***

B 3.8 ELECTRICAL POWER SYSTEMS

B 3.8.10 Distribution Systems-Shutdown

BASES

The information in this section of the reference ABWR DCD, including all subsections, is incorporated by reference with no departures or supplements.

B 3.8 ELECTRICAL POWER SYSTEMS

B 3.8.11 AC Sources-Shutdown (Low Water Level)

BASES

The information in this section of the reference ABWR DCD, including all subsections, is incorporated by reference with the following departure.

STD DEP 8.3-1

The ABWR plant medium voltage electrical system design change was provided in ABWR Licensing Topical Report (LTR) NEDO-33335 "Plant Medium Voltage Electrical System Design," Rev. 0, dated May 2007. LTR pages B 3.8-103 and B 3.8-107 are incorporated by reference.

B 3.9 REFUELING OPERATIONS

B 3.9.1 Refueling Equipment Interlocks

BASES

The information in this section of the reference ABWR DCD, including all subsections, is incorporated by reference with the following departure.

STD DEP 16.3-25

BACKGROUND

Two channels of instrumentation are provided to sense the position of the refueling machine, the loading of the refueling machine main hoist, and the full insertion of all control rods. With the reactor mode switch in the ~~shutdown or~~ refuel~~ing~~ position, the indicated conditions are combined in logic circuits to determine if all restrictions on refueling equipment operations and control rod insertion are satisfied.

LCO

To prevent criticality during refueling, the refueling interlocks associated with the reactor mode switch refuel position *ensure that fuel assemblies are not loaded with any control rod withdrawn.*

To prevent these conditions from developing, the all-rods-in, the refueling machine position, and the refueling machine main hoist fuel loaded inputs are required to be OPERABLE when the reactor mode switch is in the refuel position. *These inputs are combined in logic circuits that provide refueling equipment or control rod blocks to prevent operations that could result in criticality during refueling operations.*

APPLICABILITY

In MODE 5, a prompt reactivity excursion could cause fuel damage and subsequent release of radioactive material to the environment. The refueling equipment interlocks protect against prompt reactivity excursions during MODE 5. The interlocks are only required to be OPERABLE during in-vessel fuel movement with refueling equipment associated with the interlocks when the reactor mode switch is in the refuel position. The interlocks are not required to be OPERABLE when the reactor mode switch is in the shutdown position since a control rod block ensures that control rod withdrawal cannot occur simultaneously with in-vessel fuel movements.

In MODES 1, 2, 3, and 4, the reactor pressure vessel head is on, and no fuel loading activities are possible. Therefore, the refueling interlocks are not required to be OPERABLE in these MODES.

B 3.9 REFUELING OPERATIONS (RCS)

B 3.9.2 Refuel Position Rod-Out Interlock

BASES

The information in this section of the reference ABWR DCD, including all subsections, is incorporated by reference with the following departure.

STD DEP 16.3-14

APPLICABILITY *In MODE 5, with the reactor mode switch in the refuel position, the OPERABLE refuel position rod-out interlock provides protection against prompt reactivity excursions.*

In MODES 1, 2, 3, and 4, the refuel position rod-out interlock is not required to be OPERABLE and is bypassed. In MODES 1 and 2, the Reactor Protection System (LCOs 3.3.1.1 and 3.3.1.2) and the control rods (LCO ~~3.1.2~~3.1.3) provide mitigation of potential reactivity excursions. In MODES 3 and 4, with the reactor mode switch in the shutdown position, a control rod block (LCO 3.3.5.1) ensures all control rods are inserted, thereby preventing criticality during shutdown conditions.

B 3.9 REFUELING OPERATIONS (RCS)

B 3.9.3 Control Rod Position

BASES

The information in this section of the reference ABWR DCD, including all subsections, is incorporated by reference with the following departure.

STD DEP 7.7-18

BACKGROUND

Control rods provide the capability to maintain the reactor subcritical under all conditions and to limit the potential amount and rate of reactivity increase caused by a malfunction in the Control Rod Drive System. During refueling, movement of control rods is limited by the refueling interlocks (LCO 3.9.1 and LCO 3.9.2) or the control rod block with the reactor mode switch in the shutdown position (LCO 3.3.5.1).

GDC 26 of 10 CFR 50, Appendix A, requires that one of the two required independent reactivity control systems be capable of holding the reactor core subcritical under cold conditions (Ref. 1). The control rods serve as the system capable of maintaining the reactor subcritical in cold conditions.

The refueling interlocks and the RCIS GANG/SINGLE selection switch allow a single control rod to be withdrawn at any time unless fuel is being loaded into the core. However, during refueling, the RCIS ~~"Rod Test Switch"~~ is placed in the scram test mode which *allows two control rods to be withdrawn for scram testing. To preclude loading fuel assemblies into the core with a control rod withdrawn, all control rods must be fully inserted. This prevents the reactor from achieving criticality during refueling operations.*

B 3.9 REACTOR COOLANT SYSTEM

B 3.9.4 Control Rod Position Indication

BASES

The information in this section of the reference ABWR DCD, including all subsections, is incorporated by reference with the following departure.

STD DEP 7.7-10

ACTIONS

A.1.1, A.1.2, A.1.3, A.2.1, and A.2.2

Under these conditions, an inoperable full-in channel may be bypassed to allow refueling operations to proceed. An alternate method must be used to ensure the control rod is fully inserted (e.g., use the 0% position indication). Another option is to bypass Synchro A ~~(which is the current position probe) and use~~ or *Synchro B* so that the OPERABLE synchro providing rod position data to both channels of the RCIS is used~~. *If the readings of the two Synchros do not agree, the conditions will be alarmed to the operator to initiate bypass of Synchro A and to use Synchro B*~~

SURVEILLANCE REQUIREMENTS

SR 3.9.4.1

The full-in position indication channels provide input to the rod-out interlock and other refueling interlocks that require an all-rods-in permissive. The interlocks are activated when the full-in position indication for any control rod is not present, since this indicates that all rods are not fully inserted. Therefore, testing of the full-in position indication channels is performed to ensure that when a control rod is withdrawn, the full-in position indication is not present. Performing the SR each time a control rod is withdrawn is considered adequate because of the procedural controls on control rod withdrawals and the visual ~~and audible~~ indications available in the control room to alert the operator to control rods not fully inserted.

B 3.9 REFUELING OPERATIONS)

B 3.9.5 Control Rod OPERABILITY

BASES

The information in this section of the reference ABWR DCD, including all subsections, is incorporated by reference with no departures or supplements.

B 3.9 REFUELING OPERATIONS

B 3.9.6 Reactor Pressure Vessel (RPV) Water Level

BASES

The information in this section of the reference ABWR DCD, including all subsections, is incorporated by reference with the following departure.

STD DEP 16.3-35

BACKGROUND

The movement of fuel assemblies or handling of control rods within the RPV requires a minimum water level of 7.0 m above the top of the RPV flange. Sufficient water is necessary to retain iodine fission product activity in the water in the event of a fuel handling accident (Refs. 3.9.6-1 and 3.9.6-2). Sufficient iodine activity would be retained to limit offsite doses from the accident to ~~<~~ ≤ 25% of 10 CFR 100 limits, as provided by the guidance of Reference 3.

APPLICABLE SAFETY ANALYSES

During movement of fuel assemblies or handling of control rods, the water level in the RPV and the spent fuel pool is an initial condition design parameter in the analysis of a fuel handling accident in containment postulated by Regulatory Guide 1.25 (Ref. 1). A minimum water level of 7.0 m allows a decontamination factor of 100 (Ref. ~~4~~1) to be used in the accident analysis for iodine. This relates to the assumption that 99% of the total iodine released from the pellet to cladding gap of all the ~~dropped~~ damaged fuel assembly rods is retained by the refueling cavity water. The fuel pellet to cladding gap is assumed to contain 10% of the total fuel rod iodine inventory (Ref. 1).

Analysis of the fuel handling accident inside containment is described in Reference 2. With a minimum water level of 7.0 m and a minimum decay time of 24 hours prior to fuel handling, the analysis and test programs demonstrate that the iodine release due to a postulated fuel handling accident is adequately captured by the water, and that offsite doses are maintained within allowable limits (Ref. ~~5~~4).

APPLICABILITY

LCO 3.9.6 is applicable when moving fuel assemblies or handling control rods (i.e., movement with other than the normal control rod drive) within the RPV. The LCO minimizes the possibility of a fuel handling accident in containment that is beyond the assumptions of the safety analysis. If irradiated fuel is not present within the RPV, there can be no significant radioactivity release as a result of a postulated fuel handling accident. Requirements for fuel handling accidents in the spent fuel storage pool are covered by LCO 3.7.~~6~~8, "Fuel Pool Water Level."

B 3.9 REFUELING OPERATIONS

B 3.9.6 Reactor Pressure Vessel (RPV) Water Level

BASES

REFERENCES

1. *Regulatory Guide 1.25, March 23, 1972.*

2. *DCD Tier 2, Section 15.7.4.*

3. *NUREG-0800, Section 15.7.4.*

~~4. *NUREG-0831, Supplement 6, Section 16.4.2.*~~

~~5~~4. *10 CFR 100.11.*

B 3.9 REACTOR COOLANT SYSTEM (RCS)

B 3.9.7 Residual Heat Removal (RHR) -High Water Level

BASES

The information in this section of the reference ABWR DCD, including all subsections, is incorporated by reference with the following departures.

STD DEP 16.3-9

STD DEP 16.3-12

BACKGROUND *The purpose of the RHR System in MODE 5 is to remove decay heat and sensible heat from the reactor coolant, as required by GDC 34. Each of the three shutdown cooling loops of the RHR System can provide the required decay heat removal. Each loop consists of one motor driven pump, a heat exchanger, and associated piping and valves. Each loop has a dedicated suction nozzle from the reactor vessel. Each pump discharges the reactor coolant, after it has been cooled by circulation through the respective heat exchangers, to the reactor via feedwater line A for subsystem A, and via the individual RHR* ~~*inlet* nozzles~~ low pressure flooder spargers *for subsystems B and C. The RHR heat exchangers transfer heat to the Reactor Building Cooling Water (RCW) system (LCO 3.7.3). The RHR shutdown cooling mode is manually controlled.*

ACTIONS *A.1*

STD DEP 16.3-9

Alternate decay heat removal methods are available to the operators for review and preplanning in the unit's Operating Procedures. For example, in addition to the three RHR shutdown cooling loops, this may include the use of the Spent Fuel Pool Cooling System or the *Reactor Water Cleanup System, operating with the regenerative heat exchanger bypassed. The method used to remove the decay heat should be the most prudent choice based on unit conditions.*

B 3.9 REFUELING OPERATIONS

B 3.9.8 Residual Heat Removal (RHR) Shutdown Cooling System-Low Water Level

BASES

The information in this section of the reference ABWR DCD, including all subsections, is incorporated by reference with the following departures.

STD DEP 16.3-9

STD DEP 16.3-12

STD DEP 16.3-13

BACKGROUND

STD DEP 16.3-12

The purpose of the RHR System in MODE 5 is to remove decay heat and sensible heat from the reactor coolant, as required by GDC 34. Each of the three shutdown cooling loops of the RHR System can provide the required decay heat removal. Each loop consists of one motor driven pump, a heat exchanger, and associated piping and valves. Each loop has a dedicated suction nozzle from the reactor vessel. Each pump discharges the reactor coolant, after it has been cooled by circulation through the respective heat exchangers, to the reactor via feedwater line A for subsystem A, and via the individual RHR ~~inlet nozzles~~ low pressure flooder spargers *for subsystems B and C. The RHR heat exchangers transfer heat to the Reactor Building Cooling Water (RCW) system (LCO 3.7.2). The RHR shutdown cooling mode is manually controlled.*

STD DEP 16.3-13

LCO

In MODE 5 with irradiated fuel in the reactor pressure vessel and with *the water level < 7.0 m above the reactor pressure vessel (RPV) flange two RHR shutdown cooling subsystems must be OPERABLE.*

An OPERABLE RHR shutdown cooling subsystem consists of an RHR pump, a heat exchanger, valves, piping, instruments, and controls to ensure an OPERABLE flow path.

BASES

ACTIONS *A.1*

STD DEP 16.3-9

Alternate decay heat removal methods are available to the operators for review and preplanning in the unit's Operating Procedures. For example, in addition to the third RHR shutdown cooling loop, this may include the use of the Spent Fuel Pool Cooling System or the *Reactor Water Cleanup System, operating with the regenerative heat exchanger bypassed. The method used to remove decay heat should be the most prudent choice based on unit conditions.*

B.1, B.2, B.3, C.1, and C.2

STD DEP 16.3-13

If no RHR shutdown cooling subsystem is in operation, an alternate method of coolant circulation is required to be established within 1 hour. The Completion Time is modified such that the 1 hour is applicable separately for each occurrence involving a loss of coolant circulation.

During the period when the reactor coolant is being circulated by an alternate method (other than by the required RHR Shutdown Cooling System), the reactor coolant temperature and level must be periodically monitored to ensure proper function of the alternate method. The once per hour Completion Time is deemed appropriate.

~~*If at least one RHR subsystem is not restored to OPERABLE status immediately,*~~ With the required shutdown cooling subsystem(s) inoperable and the required alternate method(s) of decay heat removal not available in accordance with Required Action A.1, *additional actions are required to minimize any potential fission product release to the environment. This includes initiating immediate action to restore the following to OPERABLE status: secondary containment, one standby gas treatment subsystem, and one secondary containment isolation valve and associated instrumentation in each associated penetration not isolated. This may be performed as an administrative check, by examining logs or other information to determine whether the components are out of service for maintenance or other reasons. It is not necessary to perform the surveillances needed to demonstrate the OPERABILITY of the components. If, however, any required component is inoperable, then it must be restored to OPERABLE status. In this case, the surveillance may need to be performed to restore the component to OPERABLE status. Actions must continue until all required components are OPERABLE.*

B 3.10 SPECIAL OPERATIONS

B 3.10.1 Inservice Leak and Hydrostatic Testing Operation

BASES

The information in this section of the reference ABWR DCD, including all subsections, is incorporated by reference with the following departure.

STD DEP 16.3-28

REFERENCES

1. *American Society of Mechanical Engineers, Boiler and Pressure Vessel Code, Section XI.*

2. *DCD Tier 2, Section ~~15.1~~*15.4.6.

B 3.10 SPECIAL OPERATIONS

B 3.10.2 Reactor Mode Switch Interlock Testing

BASES

The information in this section of the reference ABWR DCD, including all subsections, is incorporated by reference with the following departures.

STD DEP 16.3-26

STD DEP 16.3-27

BACKGROUND

The purpose of this Special Operations LCO is to permit operation of the reactor mode switch from one position to another to confirm certain aspects of associated interlocks during periodic tests and calibrations in MODES 3, 4, and 5.

The reactor mode switch is a conveniently located, multiposition, keylock switch provided to select the necessary scram functions for various plant conditions (Ref. 1). The reactor mode switch selects the appropriate trip logic for scram functions and provides appropriate bypasses. The mode switch positions and related scram interlock functions are summarized as follows:

a. *Shutdown – Initiates a reactor scram;* selects average power range monitor (APRM) neutron flux setdown, startup range neutron monitor (SRNM) high flux and neutron flux short period scrams*; bypasses main steam line isolation* ~~*and reactor high water level*~~ turbine control valve fast closure, and turbine stop valve closure *scrams;*

b. *Refuel – Selects* ~~*Neutron Monitoring System (NMS) scram function for low neutron flux level operation (but does not disable the average power range monitor scram)*~~ APRM neutron flux setdown, SRNM high flux and neutron flux short period scrams*; bypasses main steam line isolation* ~~*and reactor high water level*~~ turbine control valve fast closure, and turbine stop valve closure *scrams;*

c. *Startup/Hot Standby – Selects* ~~*NMS scram function for low neutron flux level operation (startup range neutron monitors)*~~ APRM neutron flux setdown, SRNM high flux and neutron flux short period scrams*; bypasses main steam line isolation* ~~*and reactor high water level*~~ turbine control valve fast closure, and turbine stop valve closure *scrams; and*

d. *Run –* ~~*Selects*~~ Disables all bypasses enabled by the other reactor mode switch positions; bypasses APRM neutron flux setdown and all SRNM scrams; and selects *NMS scram function for power range operation.*

BASES

STD DEP 16.3-27

LCO

As described in LCO 3.0.7, compliance with this Special Operations LCO is optional. MODES 3, 4, and 5 operations not specified in Table 1.1-1 can be performed in accordance with other Special Operations LCOs (i.e., LCO 3.10.1, "Inservice Leak and Hydrostatic Testing Operation," *LCO 3.10.3, "Rod Withdrawal – Hot Shutdown," LCO 3.10.4, "Rod Withdrawal – Cold Shutdown,"* ~~*and LCO 3.10.7, "Control Rod Testing – Operating"*~~ LCO 3.10.8, "Shutdown Margin (SDM) Test-Refueling, and LCO 3.10.11, "Low Power PHYSICS TEST"*) without meeting this LCO or its ACTIONS. If any testing is performed that involves the reactor mode switch interlocks and requires repositioning beyond that specified in Table 1.1-1 for the current MODE of operation, the testing can be performed, provided all interlock functions potentially defeated are administratively controlled. In MODES 3, 4, and 5 with the reactor mode switch in shutdown as specified in Table 1.1-1, all control rods are fully inserted and a control rod block is initiated. Therefore, all control rods in core cells that contain one or more fuel assemblies must be verified fully inserted while in MODES 3, 4, and 5 with the reactor mode switch in other than the shutdown position. The additional LCO requirement to preclude CORE ALTERATIONS is appropriate for MODE 5 operations, as discussed below, and is inherently met in MODES 3 and 4 by the definition of CORE ALTERATIONS, which cannot be performed with the vessel head in place.*

B 3.10 SPECIAL OPERATIONS (RCS)

B 3.10.3 Control Rod Withdrawal-Hot Shutdown

BASES

The information in this section of the reference ABWR DCD, including all subsections, is incorporated by reference with the following departure.

STD DEP 7.7-18

STD DEP 16.3-24

BACKGROUND

The purpose of this MODE 3 Special Operations LCO is to permit the withdrawal of a single control rod, or control rod pair, for testing while in hot shutdown, by imposing certain restrictions. In MODE 3, the reactor mode switch is in the shutdown position, and all control rods are inserted and blocked from withdrawal. Many systems and functions are not required in these conditions, due to other installed interlocks that are actuated when the reactor mode switch is in the shutdown position. However, circumstances will arise while in MODE 3 that present the need to withdraw a single control rod, or control rod pair, for various tests (e.g., friction tests, scram timing, and coupling integrity checks). These single control rod, or control rod pair, withdrawals are normally accomplished by selecting the refuel position for the reactor mode switch. A control rod pair (those associated by a shared CRD hydraulic control unit) may be withdrawn by utilizing the ~~Rod Test Switch~~ RCIS scram test mode *which "gangs" the two rods together for rod position and control purposes. This Special Operations LCO provides the appropriate additional controls to allow a single control rod, or control rod pair, withdrawal in MODE 3.*

B 3.10 SPECIAL OPERATIONS (RCS)

B 3.10.3 Control Rod Withdrawal-Hot Shutdown

BASES

APPLICABLE SAFETY ANALYSES

With the reactor mode switch in the refuel position, the analyses for control rod withdrawal during refueling are applicable and, provided the assumptions of these analyses are satisfied in MODE 3, these analyses will bound the consequences of an accident. Explicit safety analyses (Ref. 1) demonstrate that the functioning of the refueling interlocks and adequate SDM will preclude unacceptable reactivity excursions.

Refueling interlocks restrict the movement of control rods to reinforce operational procedures that prevent the reactor from becoming critical. These interlocks prevent the withdrawal of more than one control rod or control rod pair. Under these conditions, the core will always be shut down even with the highest worth control rod pair withdrawn if adequate SDM exists.

STD DEP 7.7-18

Control rod pairs have been established for each control rod drive hydraulic control unit (except for the one rod which has its own accumulator). These pairs are selected and analyzed so that adequate shutdown margin is maintained with any control rod pair fully withdrawn. When the ~~Rod Test Switch~~ RCIS scram test mode *is used and GANG mode is selected for the RCIS, the selected rod pair is substituted for a single rod within the appropriate logic in order to satisfy the refuel mode rod-out interlock. The rod pair may then be withdrawn simultaneously.*

STD DEP 16.3-24

LCO

As described in LCO 3.0.7, compliance with this Special Operations LCO is optional. Operation in MODE 3 with the reactor mode switch in the refuel position can be performed in accordance with other Special Operations LCO~~s~~ (i.e., LCO 3.10.2, "Reactor Mode Switch Interlock Testing," ~~and LCO 3.10.4, "Control Rod Withdrawal – Cold Shutdown"~~) without meeting this Special Operations LCO or its ACTIONS. However, if a single control rod, or control rod pair, withdrawal is desired in MODE 3, controls consistent with those required during refueling must be implemented and this Special Operations LCO applied. The refueling interlocks of LCO 3.9.2, "Refuel Position Rod-Out Interlock," required by this Special Operations LCO, will ensure that only one control rod, or control rod pair, can be withdrawn.

B 3.10 SPECIAL OPERATIONS

B 3.10.4 Control Rod Withdrawal-Cold Shutdown

BASES

The information in this section of the reference ABWR DCD, including all subsections, is incorporated by reference with no departures or supplements.

STD DEP 7.7-18

STD 16.3-20

BACKGROUND

The purpose of this MODE 4 Special Operations LCO is to permit the withdrawal of a single control rod, or control rod pair, for testing or maintenance, while in cold shutdown, by imposing certain restrictions. In MODE 4, the reactor mode switch is in the shutdown position, and all control rods are inserted and blocked from withdrawal. Many systems and functions are not required in these conditions, due to the installed interlocks associated with the reactor mode switch in the shutdown position. Circumstances will arise while in MODE 4, however, that present the need to withdraw a single control rod, or control rod pair, for various tests (e.g., friction tests, scram time testing, and coupling integrity checks). Certain situations may also require the removal of the associated control rod drives (CRD). These single or dual control rod withdrawals and possible subsequent removals are normally accomplished by selecting the refuel position for the reactor mode switch. A control rod pair (those associated by a single CRD hydraulic control unit) may be withdrawn by utilizing the ~~Rod Test Switch~~ RCIS scram test mode*, which "gangs" the two rods together for rod position and control purposes.*

APPLICABLE SAFETY ANALYSES

With the reactor mode switch in the refuel position, the analyses for control rod withdrawal during refueling are applicable and, provided the assumptions of these analyses are satisfied in MODE 4, these analyses will bound the consequences of an accident. Explicit safety analyses (Ref. 1) demonstrate that the functioning of the refueling interlocks and adequate SDM will preclude unacceptable reactivity excursions.

Refueling interlocks restrict the movement of control rods to reinforce operational procedures that prevent the reactor from becoming critical. These interlocks prevent the withdrawal of more than one control rod, or control rod pair. Under these conditions, the core will always be shut down even with the highest worth control rod pair withdrawn if adequate SDM exists.

Control rod pairs have been established for each control rod drive hydraulic control unit (except for the one rod which has its own accumulator). These pairs are selected and analyzed so that adequate shutdown margin is maintained with any control rod pair fully withdrawn. When the ~~rod test switch~~ RCIS scram

BASES

test mode *is used and GANG mode is selected for the RCIS, the selected rod pair is substituted for a single rod within the appropriate logic in order to satisfy the refuel mode rod-out interlock. The rod pair may then be withdrawn simultaneously.*

STD 16.3-20

LCO *As described in LCO 3.0.7, compliance with this Special Operations LCO is optional. Operation in MODE 4 with the reactor mode switch in the refuel position can be performed in accordance with other LCOs (i.e., Special Operations LCO 3.10.2, "Reactor Mode Switch Interlock Testing~~,~~" ~~and LCO 3.10.3, "Control Rod Withdrawal – Hot Shutdown"~~) without meeting this Special Operations LCO or its ACTIONS. If a single control rod, or control rod pair, withdrawal is desired in MODE 4, controls consistent with those required during refueling must be implemented and this Special Operations LCO applied.*

B 3.10 SPECIAL OPERATIONS)

B 3.10.5 Control Rod Drive (CRD) Removal-Refueling

BASES

The information in this section of the reference ABWR DCD, including all subsections, is incorporated by reference with the following departures.

STD DEP 7.7-18

STD DEP 16.3-22

STD DEP 16.3-23

BACKGROUND

The purpose of this MODE 5 Special Operations LCO is to permit the removal of a CRD during refueling operations by imposing certain administrative controls. Refueling interlocks restrict the movement of control rods and the operation of the refueling equipment to reinforce operational procedures that prevent the reactor from becoming critical during refueling operations. During refueling operations, no more than one control rod, or control pair, is permitted to be withdrawn from a core cell containing one or more fuel assemblies. The refueling interlocks use the "full in" position indicators to determine the position of all control rods. If the "full in" position signal is not present for every control rod, then the all rods in permissive for the refueling equipment interlocks is not present and fuel loading is prevented. Also, the refuel position rod-out interlock will not allow the withdrawal of a second control rod. A control rod drive pair (those associated by a shared CRD hydraulic control unit) may be removed under the control of the rod-out interlock by utilizing the ~~rod test switch~~ RCIS scram test mode*. This switch allows the CRD pair to be treated as one CRD for purposes of the rod-out interlock.*

APPLICABLE SAFETY ANALYSES

With the reactor mode switch in the refuel position, the analyses for control rod withdrawal during refueling are applicable and, provided the assumptions of these analyses are satisfied, these analyses will bound the consequences of accidents. Explicit safety analyses (Ref. 1) demonstrate that the proper operation of the refueling interlocks and adequate SDM will preclude unacceptable reactivity excursions.

Control rod pairs have been established for each control rod drive hydraulic control unit (except for the center rod which has its own accumulator). These pairs are selected and analyzed so that adequate shutdown margin is maintained with any control rod pair fully withdrawn. When the ~~rod test switch~~ RCIS scram test mode *is used, the selected rod pair is substituted for a single rod within the appropriate logic in order to satisfy the refuel mode rod-out interlock. The rod pair may then be withdrawn simultaneously.*

B 3.10 SPECIAL OPERATIONS)

B 3.10.5 Control Rod Drive (CRD) Removal-Refueling

BASES

STD DEP 16.3-23

LCO

As described in LCO 3.0.7, compliance with this Special Operations LCO is optional. Operation in MODE 5 with any of the following LCOs – LCO 3.3.1.1, "SSLC Instrumentation," LCO 3.3.1.2, "Reactor Protection System (RPS) and MSIV ~~Trip~~ Actuation Logic," LCO 3.3.8.~~2~~1, "~~Vital AC~~ Electric Power Monitoring," LCO 3.9.1, LCO 3.9.2, LCO 3.9.4, or LCO 3.9.5 - not met can be performed in accordance with the Required Actions of these LCOs without meeting this Special Operations LCO or its ACTIONS. However, if a single CRD or CRD drive pair removal from a core cell containing one or more fuel assemblies is desired in MODE 5, controls consistent with those required by LCO 3.3.1.1, LCO 3.3.1.2, LCO 3.3.8.~~2~~1, LCO 3.9.1, LCO 3.9.2, LCO 3.9.4, and LCO 3.9.5 must be implemented and this Special Operations LCO applied.

STD DEP 16.3-23

APPLICABILITY

Operation in MODE 5 is controlled by existing LCOs. The allowance to comply with this Special Operations LCO in lieu of the ACTIONS of LCO 3.3.1.1, LCO 3.3.1.2, LCO 3.3.8.~~2~~1, LCO 3.9.1, LCO 3.9.2, LCO 3.9.4, and LCO 3.9.5 is appropriately controlled with the additional administrative controls required by this Special Operations LCO, which reduces the potential for reactivity excursions.

STD DEP 16.3-22

ACTIONS

A.1, A.2.1, and A.2.2

If one or more of the requirements of this Special Operations LCO are not met, the immediate implementation of these Required Actions restores operation consistent with the normal requirements for failure to meet LCO 3.3.1.1, LCO 3.3.1.2, LCO 3.9.1, LCO 3.9.2, LCO 3.9.4, and LCO 3.9.5 (i.e., all control rods inserted) or with the allowances of this Special Operations LCO. The Completion Times for Required Action A.1, Required Action A.2.1, and Required Action A.2.2 are intended to require these Required Actions be implemented in a very short time and carried through in an expeditious manner to either initiate action to restore the CRD(s) and insert its control rod(s), or initiate action to restore compliance with this Special Operations LCO. Actions must continue until either Required Action A.2.1 or Required Action A.2.2 is satisfied.

B 3.10 SPECIAL OPERATIONS)

B 3.10.5 Control Rod Drive (CRD) Removal-Refueling

BASES

STD DEP 16.3-22

SURVEILLANCE REQUIREMENTS

SR 3.10.5.1, SR 3.10.5.2, SR 3.10.5.3, SR 3.10.5.4, and SR 3.10.5.5

Verification that all the control rods, other than the control rod(s) withdrawn for the removal of the associated CRD, are fully inserted is required to ensure the SDM is within limits. Verification that the local five by five array of control rods other than the control rod withdrawn for the removal of the associated CRD, is inserted and disarmed, while the scram function for the withdrawn rod is not available, is required to ensure that the possibility of criticality remains precluded. Verification that a control rod withdrawal block has been inserted ensures that no other control rods can be inadvertently withdrawn under conditions when position indication instrumentation is inoperable for the withdrawn control rod. The Surveillance for LCO 3.1.1, which is made applicable by this Special Operations LCO, is required in order to establish that this Special Operations LCO is being met. Verification that no other CORE ALTERATIONS are being made is required to ensure the assumptions of the safety analysis are satisfied.

B 3.10 SPECIAL OPERATIONS

B 3.10.6 Multiple Control Rod Withdrawal-Refueling

BASES

The information in this section of the reference ABWR DCD, including all subsections, is incorporated by reference with no departures or supplements.

B 3.10 SPECIAL OPERATIONS (RCS)

B 3.10.7 Control Rod Testing-Operating

BASES

The information in this section of the reference ABWR DCD, including all subsections, is incorporated by reference with the following departure.

STD DEP 16.3-4

LCO

As described in LCO 3.0.7, compliance with this Special Operations LCO is optional. Control rod testing may be performed in compliance with the prescribed sequences of LCO 3.1.6, and during these tests, no exceptions to the requirements of LCO 3.1.6 are necessary. For testing performed with a sequence not in compliance with LCO 3.1.6, the requirements of LCO 3.1.6 may be suspended, provided additional administrative controls are placed on the test to ensure that the assumptions of the special safety analysis for the test sequence remain valid. When deviating from the prescribed sequences of LCO 3.1.6, ~~individual control rods must be bypassed in the Rod Action and Position Information (RAPI) Subsystem~~ the approved control rod sequence must be enforced by the RWM (LCO 3.3.5.1 Function 1b); or ~~A~~assurance that the test sequence is followed can be provided by a second licensed operator or other qualified member of the technical staff verifying conformance to the approved test sequence. ~~These controls are consistent with those normally applied to operation in the startup range as defined in SR 3.3.5.1.7, when it is necessary to deviate from the prescribed sequence (e.g., an inoperable control rod that must be fully inserted).~~

B 3.10 SPECIAL OPERATIONS (RCS)

B 3.10.7 Control Rod Testing-Operating

BASES

SURVEILLANCE REQUIREMENTS

SR 3.10.7.1

~~During performance of the special test, a second licensed operator or other qualified member of the technical staff is required to verify conformance with the approved sequence for the test. This verification must be performed during control rod movement to prevent deviations from the specified sequence. This Surveillance provides adequate assurance that the specified test sequence is being followed and is also supplemented by SR 3.3.5.1.7, which requires verification of the bypassing of control rods in RAPI and subsequent movement of these control rods.~~ The control rod withdrawal sequences during the SDM tests may be enforced by the RWM (LCO 3.3.5.1, Function 1.b, MODE 1 or 2 requirements, as applicable) or by a second licensed operator or other qualified member of the technical staff. As noted, either the applicable SRs for the RWM (LCO 3.3.5.1) must be satisfied according to the applicable Frequency (SR 3.10.7.1 and SR 3.10.7.2), or the proper movement of control rods must be verified. This latter verification (i.e., SR 3.10.7.1) must be performed during control rod movement to prevent deviations from the specified sequence. Either of these surveillances provides adequate assurance that the specified test sequence is being followed.

B 3.10 SPECIAL OPERATIONS

B 3.10.8 SHUTDOWN MARGIN (SDM) Test-Refueling

BASES

The information in this section of the reference ABWR DCD, including all subsections, is incorporated by reference with the following departure.

STD DEP 16.3-18

APPLICABILITY

These SDM test Special Operations requirements are only applicable if the SDM tests are to be performed while in MODE 5 with ~~the reactor vessel head removed or the head bolts not fully tensioned~~ the reactor mode switch in the startup position*. Additional requirements during these tests to enforce control rod withdrawal sequences and restrict other CORE ALTERATIONS provide protection against potential reactivity excursions. Operations in all other MODES are unaffected by this LCO.*

ACTIONS

A.1

With one or more of the requirements of this LCO not met for reasons other than Condition B*, the testing should be immediately stopped by placing the reactor mode switch in the shutdown or refuel position. This results in a condition that is consistent with the requirements for MODE 5 where the provisions of this Special Operations LCO are no longer required.*

B.1

With ~~the requirements of this LCO not met~~ one control rod not coupled to its associated CRD*, the affected control rod shall be declared inoperable. This ~~results in a condition that is consistent with the requirements for MODE 5 where the provisions of this Special Operations LCO are no longer required~~* will require entry into the ACTIONS of LCO 3.9.5, Control Rod OPERABILITY-Refueling," and action must be initiated immediately to fully insert the inoperable withdrawn control rod.

B 3.10 SPECIAL OPERATIONS (RCS)

B 3.10.9 Reactor Internal Pumps (RIPs)-Testing

BASES

The information in this section of the reference ABWR DCD, including all subsections, is incorporated by reference with no departures or supplements.

B 3.10 SPECIAL OPERATIONS (RCS)

B 3.10.10 Training Startups

BASES

The information in this section of the reference ABWR DCD, including all subsections, is incorporated by reference with no departures or supplements.

B 3.10 SPECIAL OPERATIONS

B 3.10.11 ~~Training Startups~~ Low Power PHYSICS TEST

BASES

The information in this section of the reference ABWR DCD, including all subsections, is incorporated by reference with no departures or supplements.

B 3.10 SPECIAL OPERATIONS (RCS)

B 3.10.12 Multiple Control Rod Drive Subassembly Removal-Refueling

BASES

The information in this section of the reference ABWR DCD, including all subsections, is incorporated by reference with the following departure.

STD DEP 16.3-17

BACKGROUND

The purpose of this MODE 5 Special Operations LCO is to permit multiple control rod drive subassembly removal during refueling by imposing certain administrative controls. For the purposes of this LCO, CRD subassembly removal is the removal of the CRD motor assembly, which includes the motor, brake and synchro, the position indicator probe (PIP) and the spool piece assembly, with the associated control rod maintained in the fully inserted position by applicable *mechanical anti-rotational locking devices* (i.e., one device applies to FMCRD motor assembly removal prior to spool piece removal, and another device applies to spool piece removal following motor assembly). *With the CRD subassembly removed, control rod position indication is not available in the control room. Reference 2 contains a description of the CRD subassembly removal.*

This Special Operations LCO establishes the necessary administrative controls to allow bypass of the "full in" position indicators for CRDs with subassemblies removed for maintenance and the associated rods maintained fully inserted by their applicable *mechanical anti-rotation locking devices. LCO 3.10.6 establishes administrative controls for complete removal of multiple CRDs where the control rods are fully withdrawn.*

APPLICABLE SAFETY ANALYSES

Explicit safety analyses (Ref. 1) demonstrate that the functioning of the refueling interlocks and adequate SDM will prevent unacceptable reactivity excursions during refueling. To allow multiple control rod drive subassembly removal, the "full in" position indication is allowed to be bypassed for each control rod drive with its subassembly removed and the associated control rod maintained fully inserted by its applicable *mechanical anti-rotation locking device~~s~~.*

APPLICABILITY

Operation in MODE 5 is controlled by existing LCOs. The exceptions from other LCO requirements (e.g., the ACTIONS of LCO 3.9.3, LCO 3.9.4 or LCO 3.9.5) allowed by this Special Operations LCO are appropriately controlled by allowing only the removal of non-adjacent control rod drive subassemblies whose "full in" indicators are allowed to be bypassed and associated control rods maintained fully inserted by their applicable *anti-rotation device~~s~~.*