ATTACHMENT 5

Peach Bottom Atomic Power Station
Units 2 and 3
Docket Nos. 50-277 and 50-278

License Amendment Request
Response to Request for Additional Information

Alternative Source Term (AST)

PBAPS Calculation 23-4/X-1, Revision 0, *"Reactor Building - H&V Ducts, Seismic Analysis"*

NUCLEAR GROUP
M-20599 Rev. 3/93
DOCTYPE 001

CALCULATION COVER SHEET

1. Calculation No. 23-4/X-1
Page 1

2. ☐ LGS ☒ PBAPS

UNIT(S) 2 & 3

3. MOD/NCR/ECR No.: Other: CALC. TURNOVER TO DS

4. Responsible Branch: SECS

5. Total No. of Pages: 33

6. Last Page No: 26

7. ☐ Safety Related ☐ Non-Safety Related

8. Description: REACTOR BUILD. - H&V DUCTS, SEISMIC ANALYSIS

9. System/Topic No.: 70, 901

Structure: —

Component: —

RECORD OF REVISIONS

10. Rev. No.	11. Description of Revision	12. Vendor Calc. Number	Rev.	13. Assumptions Yes	No	14. Signatures Preparer	Reviewer	Approver/Date
0	THIS CALCULATION HAS NOT BEEN VALIDATED							"APPROVED FOR RECORD"
	FOR TECHNICAL CONTENT. IT HAS BEEN							FM/MKS-UE 9/24/93
	ADMINISTRATIVELY PROCESSED AND ACCEPTED							
	FOR PIMS INDEXING. SINCE THE CALCULATION							
	MAY OR MAY NOT REFLECT THE CURRENT AS-BUILT							
	CONFIGURATION, THE USER MUST REVIEW THE							
	CALCULATION FOR TECHNICAL ADEQUACY AND THE							
	CURRENT CONFIGURATION NEEDED TO SUPPORT							
	OTHER CALCULATIONS OR DESIGN ACTIVITIES IN							
	PROGRESS.							

15. Related Calc. Numbers						
	Provides Info to:					
	Receives Info from:					
	Supersedes:					

16.
☒ Manual
☐ Computer
Computer program and version

PEACH BOTTOM ATOMIC POWER STATION UNITS 2&3
QUALITY ASSURANCE PROGRAM
CALCULATION COVER SHEET
DISCIPLINE CIVIL

23-4/X-1

JOB NO. 6280-2

No of sheets

TITLE: P E A C H B O T T O M A. P. S.

SUBJECT: REACTOR BUILDING MISC X-1

STATEMENT OF PROBLEM

STRUCTURAL ANALYSIS

SAR CHECKED ☒ SAR CHANGE REQ'D ☐ SAR CHANGE NOTICE INITIATED ☐

SOURCES OF DATA

DWGS:

DESIGN CRITERIA: PEACH BOTTOM UNITS 2 & 3, REVISION 5

SOURCES OF FORMULAE & REFERENCES

1. UBC-1967
2. ACI 318-63
3. AISC-1967
4. M-425, M-426, M-404, M-447

*PRELIMINARY CALC ☐ FINAL CALC ☒ SUPERSEDES CALC DATED

REV NO	DATE	CALCULATION BY	CHECKED BY	DATE	APPROVED BY	DATE
	10/70	E Solonzano	W. Bertwell	'70	R Uhe	10/17/70

BECHTEL

CALCULATION SHEET

23-4|X-1

128 (0510) 4-68

SIGNATURE H. Solorzano

DATE 10/8/70

TITLE P.B.

JOB NO. 6280-2

SUBJECT H & V Ducts - Dyn. Seismic Analysis

SHEET NO. 1

INTRODUCTION

From observation of in-place ducts around control room area, a flexible system of supports is not practical since deflections in the range of several inches are not possible, physically, at the hangers, due in part to the longitudinal stiffness of the duct system itself.

In this case, we would have to analyze it similarly to a piping flexible system, which is lengthy and time consuming.

Therefore, a rigid system would be a more logical way to go in view of the above observations.

We will try to determine what is required to do to the existing system as now placed to make it oct rigid and also as an alternate for the other systems not yet erected, what is the acceptable rigid system.

As a limit a natural frequency of 30 cps will be considered rigid body motion - Damping used is $\frac{1}{2}$%

Present supports are about 8' to 16' c/c

Duct material is 22 ga. ≅ 1.4 #/o' } From R. Armstrong, H&V
Insulation wt. ≅ 0.5 #/o'
Say 2.0 #/o' Total D.L. (no L.L. except during constr.)

Ref. dwgs. M-425 as marked by H&V for systems
426
447
407

BECHTEL

CALCULATION SHEET

23-4|X-1

0510 (4-68)

11/9/70

SIGNATURE H. SOLORZANO

DATE

TITLE P.B.

JOB NO. 6280

SUBJECT H&V Ducts - Dynamic Seismic Analysis

SHEET NO. 2

METHOD OF ANALYSIS

Since we will use rigid system,

a) Determine required duct span to provide us with a natural frequency in the rigid range (≥30 cps)

b) Obtain acceleration for rigid system from Spectrum Response Curves - Investigate range of accelerations involved for ducts of the whole job and if the difference is not great, we will use the worst.

c) Determine equivalent static lateral Load from above acceleration $F = ma$

d) Determine stresses on existing system for above loading - Modify as required to satisfy criteria - Evaluate a new and possibly more efficient hanger system for future hangers - Rigidity criteria of support is the same as for ducts -

e) Check out details for integrity, including duct splice

f) Layout and detail hanger system

CONCLUSIONS

1.) Weights involved are extremly light, therefore, the proposed system lends itself readily for a rigid support system

2.) As detailed here, square and rectangular ducts should give a good account of themselves under a seismic disturbance of the magnitude postulated for our site.

BECHTEL

CALCULATION SHEET

23-4/XY

0510 (4-68)

SIGNATURE ESR

DATE

TITLE PEACH BOTTOM APS

JOB NO. 6280

SUBJECT H&V DUCTS—SEISMIC ANALYSIS

SHEET NO. 3

Group ducts to analyze as a whole:

Duct sizes: Repr. sizes (22 ga.) = .03"

SIZES	Perimeter	wt/FT	CATEGORY
4 × 12	32" = 2.67'	5.3 #/FT	I
6 × 20	56 = 4.67	9.3	
8 × 18	52 = 4.3	8.6	
9 × 18	54 = 4.5	9.0	
10 × 20	50 = 4.2	8.4	
12 × 36	96 = 8.	16.	II
14 ×			
16 × 48	128 = 10.7	21.4	
18 × 16	68 = 5.7	11.4	
20 × 34	108 = 9.	18.	
28 × 30	116 = 9.7	19.4	
32 × 20	104 = 8.7	17.4	
40 × 16	112 = 9.3	18.6	
48 × 30	156 = 13.	26.	III
50 × 32	164 = 13.7	27.4	

Divide ducts arbitrarily into three categories per weight: 10#/1 ; 20#/1 and 30#/1 based on the above tabulat.

(6×20) I (28×30) II (50×32) III

0 0 0 0 0 0 7 9 6 4 8 4

BECHTEL

CALCULATION SHEET

23-4 | X-1 28 (0510) 4-66

Δ 11/4/70

SIGNATURE: ESR DATE:

TITLE: Peach Bottom APS JOB NO. 6280

SUBJECT: H & V Ducts - Seismic Analysis SHEET NO. 4

Evaluation of stress and stiffness of ducts

Since ducts are oriented in different ways, worst condit. used here:

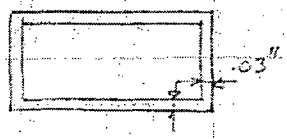

(Conserv. to consider short dim. vertical)

Gross I:

$6\times20 = (.03\times20)(3)^2(2) + \frac{(.03)(6)^3}{12}(2) = 11.9\ in^4$

$28\times30 = (.03\times20)(14)^2(2) + \frac{.03(28)^3}{12}(2) = 345.\ in^4$

$50\times32 = (.03\times50)(16)^2(2) + \frac{.03(32)^3}{12}(2) = 17{,}265.\ in^4$

$M_{ss} = \frac{10\times(8)^2}{8} = 80.^{1-\#} = 960.^{\prime\prime-\#}$ $f = \frac{960\times3}{11.9} = 242.\ psi$

$= \frac{20\times(8)^2}{8} = 160.^{1-\#} = 1920.$ $f = \frac{1920\times14}{345} = 780.\ psi$

$= \frac{30\times(8)^2}{8} = 240. = 2870.$ $f = \frac{2870\times16}{17{,}265.} = 267\ psi$

From AISI Charts (3A & 3C):

Min. $w/t \cong 300.$ $b/t \cong 120$ for 4000. psi (Strength) = 150 for Defl.

Max. " $\cong 800.$

Effective $b = 120\times.03 = 3.6''$ for strength and $150\times.03 = 4.5''$ for Defl.

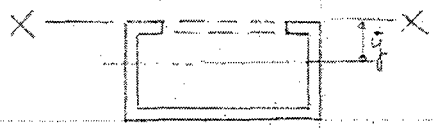

(6×20)

Area	ȳ	Aȳ	Aȳ²	I_{web}
.03×4.5=.135	.01	—	—	—
2×.03×6.0=.36	3.	1.08	3.24	$.03\times\frac{6^3}{12}=0.54$
.03×20=.6	5.98	3.59	21.4	0.54
1.095		4.67	24.64	1.08

$\bar{y} = \frac{4.67}{1.1} = 4.25''$

$\Sigma = 25.7$

$(-)\ 1.1(4.25)^2 = 19.9$

Net $I = 5.8\ in^4$

BECHTEL

CALCULATION SHEET

23-9|X-1

0510 (4-68)

SIGNATURE ESR

DATE

TITLE Peach Bottom AB

JOB NO. 6280

SUBJECT H&V Ducts - Seismic Analysis

SHEET NO. 4 A

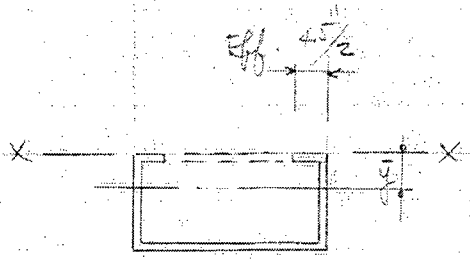

(30×28)

Area	y	Ay	Ay²	I about
.03×4.5 = .135	.01	—	—	.03×28³/12 = 55.
2×.03×28 = 1.68	14.	23.5	329.	55.
.03×30 = 0.9	29.98	25.2	705.	—
2.72		48.7	1034.	110.

$\bar{y} = \frac{48.7}{2.72} = 17.9''$

Σ = 1144.

(−) 2.72 (17.9)² = 873.

Net I = 271. in⁴

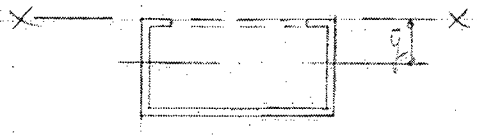

(50×32)

.03×4.5 = .135	.01	—	—	.03×32³/12 = 82.5
2×.03×32 = 1.92	16.	30.7	490.	82.5
.03×50 = 1.50	31.98	48.	1540.	—
3.55		78.7	2030	165.

$\bar{y} = \frac{78.7}{3.55} = 22.2''$

Σ = 2195.

(−) 3.55 (22.2)² = 1750.

Net I = 445. in⁴

We will solve now for required I on a continous beam over 4 spans, uniformly loaded, to produce deflection required for rigid body motion, using 8' c/c spans:

From AISC for 4 spans uniformly loaded

$$\Delta = \frac{.0065 w l^4}{EI} = \frac{.0065 \times (96)^4 (w)}{29{,}000{,}000.\ (I)} = (2.24\times10^{-10})(96)^4\left(\frac{w}{I}\right)$$

$$= 1.9\times10^{-2}\left(\frac{w}{I}\right)$$

Natural Frequency (cps) $= \frac{\pi}{\sqrt{\Delta''}} = 30.$ For rigid-body motion

$\therefore \sqrt{\Delta} = 0.105$ and $\underline{\underline{\Delta_{req'd.} = 0.011''}}$

(Req'd. Defl. for Rigid-body motion)

Solving for $\left(\frac{w}{I}\right) = \frac{.011}{1.9\times10^{-2}} = .58$ and $w = 10\,\#/' = .83\,\#/'$

$30. = 1.66$

$30. = 2.49$

$I_I = \frac{.83}{.58} = 1.43\ in^4$

$I_{II} = \frac{1.66}{.58} = 2.87$

$I_{III} = \frac{2.49}{.58} = 4.3$

Therefore, 8' c/c spacing of supports is adequate

BECHTEL

CALCULATION SHEET

23-4|X-1

128 (0510) 4-68

△1 11/3/70

SIGNATURE ESR

DATE

TITLE Peach Bottom APS

JOB NO. 6280

SUBJECT H&V Ducts - Seismic Analysis

SHEET NO. 6

Check for allowable spans:

$\Delta = .011''$ for rigid body motion

$\Delta = \frac{.0065 w l^4}{EI} = 2.24 \times 10^{-10} \left(\frac{w l^4}{I}\right)$ for 4 spans unif. loaded

$\therefore \frac{w l^4}{I} = \frac{.011}{2.24 \times 10^{-10}} = 49.3 \times 10^6$

For $I = 6 \text{ in}^4$; $w l^4 = 296. \times 10^6$; $l^4 = \frac{296. \times 10^6}{0.83 \#/''} = 356. \times 10^6$

$\underline{l_I = 137'' = 11.4'}$

For $I = 271. \text{ in}^4$; $w l^4 = 13,350 \times 10^6$; $l^4 = \frac{13,350 \times 10^6}{1.67 \#/''} = 8,000. \times 10^6$

$\underline{l_{II} = 299'' = 24.9'}$

For $I = 445. \text{ in}^4$; $w l^4 = 21,900 \times 10^6$; $l^4 = \frac{21,900 \times 10^6}{2.5 \#/''} = 8780 \times 10^6$

$\underline{l_{III} = 306'' = 25.5'}$

See splice det. check for limiting spans on sheet 10

SIGNATURE ESR DATE

TITLE PEACH BOTTOM ADS JOB NO. 6280

SUBJECT H & V DUCTS — SEISMIC ANALYSIS SHEET NO. 7

INVESTIGATION OF EXIST. SUPPORTS

A survey of Spectrum Response Curves for the job indicates that for ½% Damping, the maximum acceleration is 0.2 G

Therefore, for 30#/1 × 8' Trib. = 240.# × 1.04 (Vert. accel.) = 250.# Vert.
0.2 (240.#) = 48.# Horiz. (Long. & Transv.)

Review of Ref. dwg's. in Control Rm. Area where the highest ceiling spaces occur, we get the following hanger lengths:

To M. Deck - 6.5'
To WF beams - 3.0'

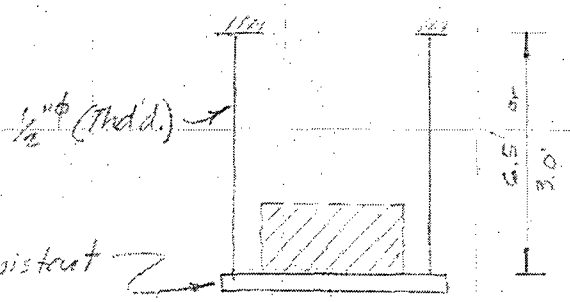

$M_1 = 6.5' \times \frac{48}{2} = 156.'\text{-}\# = 1890.''\text{-}\#$

$M_2 = 3.0 \times \frac{48}{2} = 72. = 865.$

$S = .1\,d^3 = .1\left(\frac{1}{2}\right)^3 = .013\ in^3$

$f_1 = \frac{1890}{.013} = 145{,}000.$ psi N.G.

$f_2 = \frac{865.}{.013} = 66{,}500.$ N.G.

$\frac{P}{A} = \frac{250\#}{2 \times .142} = 882.$ psi

Therefore, we have to stiffen up exist. system for strength and flexibility

09

126 (0510) 4-68

BECHTEL

CALCULATION SHEET

23- 4/X-1 △ 11/3/70

SIGNATURE ESR DATE

TITLE PEACH BOTTOM APS JOB NO. 6280

SUBJECT H & V DUCTS - SEISMIC ANALYSIS SHEET NO. 8

BRACING SYSTEM FOR EXIST. ROD HANGERS

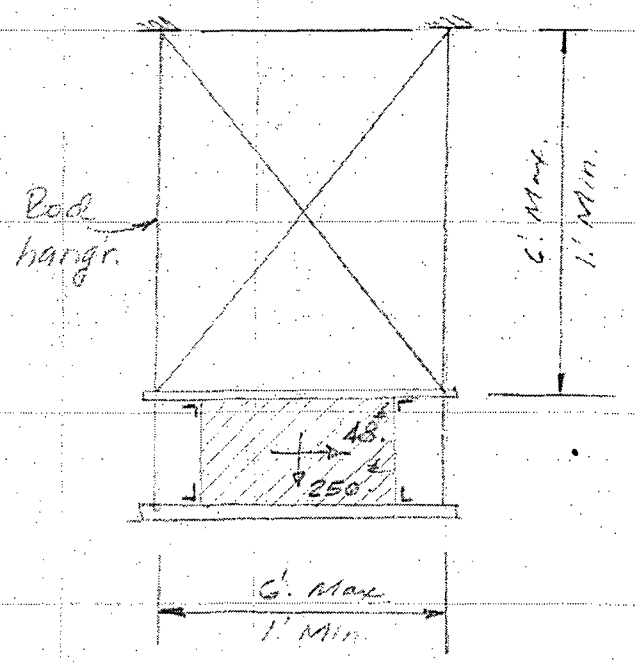

Max. for tens. brac'g. = 6.1 (48) = 293.#

$l \approx 75''$ max.

For $2\frac{1}{2} \times 2\frac{1}{2} \times \frac{1}{4}$ ∠ $r = .49''$

$\frac{l}{r} = \frac{75}{.49} = 153. < 200.$ OK

Axial ld. Cap = 7640 #/□" × 1.2 = 9150.# OK

Max. axial Load:

$48 \times \frac{6}{1} = -288.$#

$250 \times \frac{1}{2} = +125$

$163.$# OK

This would occur only if we had the very flat angle assumed, which is unlikely — In the more common case there will not be compr. at all. —

It is therefore required that for new hangers angles be employed rather than rods to avoid the above situation since in this case only one diag. is req'd.

Cap. of L-$2\frac{1}{2} \times 2\frac{1}{2} \times \frac{1}{4}$ is adequate and

$\frac{1}{2}$"φ in Shear & Porg. is OK

Likewise, $\frac{3}{16}$" F. Weld is OK

0 0 0 0 0 0 0 7 9 1 4 2 9 0

10

128 (0510) 4-68

BECHTEL

CALCULATION SHEET

23-4/X-1

SIGNATURE ESR DATE

TITLE PEACH BOTTOM APS JOB NO. 6280

SUBJECT H&V DUCTS SEISMIC ANALYSIS SHEET NO. 9

Deflection check to comply with rigid body criteria – Supports –

From Pp. 6 Axial Deformat. of bracing is:

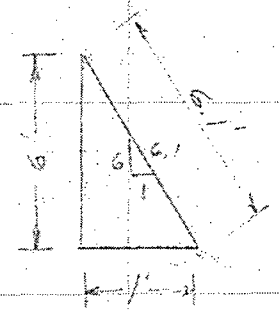

(Worst Cond.)

$A = 1.2^{\square''}$ $L = 73''$ $P = 48^{\#}(6.1) = 293^{\#}$

$$\delta = \frac{PL}{AE} = \frac{293 \times 73}{1.2 \times 29 \times 10^6} = .000615'' < .011'' \text{ OK}$$

Components of deform. small also.
(Lat. $\delta = \frac{6.1}{1} \times .000615 = .0038''$ &
For both diag. work's. $\Delta = \frac{1}{2} \times .0038$)

If we were to have only a frame without bracing at short hangers, we get:

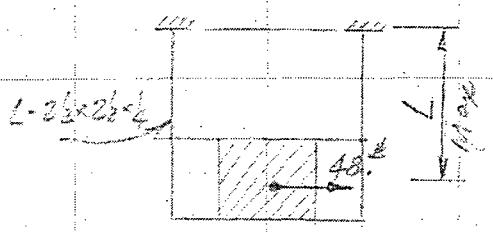

$$\Delta = \frac{24^{\#} \times L^3}{3 \times 29 \times 10^6 \times 0.7} = 0.011''$$

$$L^3 = \frac{0.011 \times 3 \times 29 \times 10^6 \times 0.7}{24} = 28000.$$

$L_{max} = 30.3''$ Say 2'-6"

SIGNATURE ER DATE

TITLE PEACH BOTTOM ADS JOB NO. 6280

SUBJECT H & V DUCTS - SEISMIC ANALYSIS SHEET NO. 9A

Alternate scheme:

Provide rigid frame to resist loads instead of bracing:

For rigid body motion allowable deflection = .011"

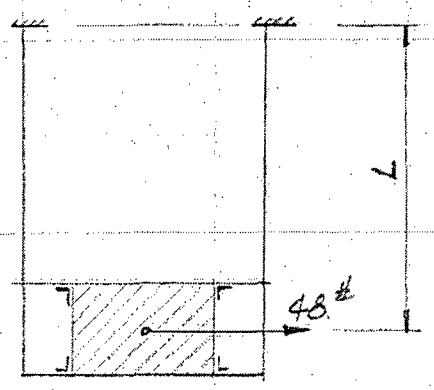

$$\Delta = \frac{PL^3}{3EI}$$

$$I_{rigid.} = \frac{PL^3}{3E\Delta} = \frac{24 \times L^3}{3 \times 29 \times 10^6 \times .011} =$$

$$= 2.51 \times 10^{-5} \, (L^3)$$

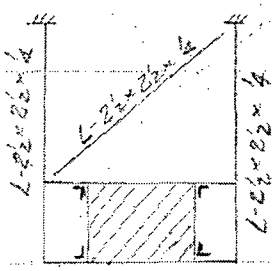

ALTERN. FRAME.

Shape	L	L^3	I
L-2½×2½×¼	10	10^3	2.51×10^{-2}
	15	3.4×10^3	8.54×10^{-2}
	20	$8. \times 10^3$	20.1×10^{-2}
	25	15.6×10^3	39.2×10^{-2}
	30	$27. \times 10^3$	67.8×10^{-2}
	35	$43. \times 10^3$	108×10^{-2}
	40	64×10^3	161×10^{-2}
	45	91×10^3	228×10^{-2}
	50	125×10^3	314×10^{-2}
	60	216×10^3	542×10^{-2}

BECHTEL

CALCULATION SHEET

23-4/X-1

0510 (4-68)

SIGNATURE ESR

DATE

TITLE PEACH BOTTOM APS

JOB NO. 6280

SUBJECT H & V DUCTS – SEISMIC ANALYSIS

SHEET NO. 9B

Check:

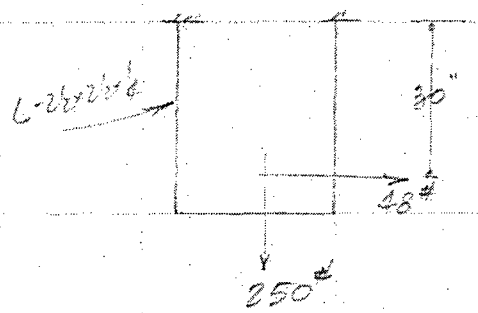

$M = 24^{\#} \times 30'' = 720.''\text{-}\#$

$S_1 = .39\ in^3 \quad (L\text{-}2\tfrac{1}{2} \times 2\tfrac{1}{2} \times \tfrac{1}{4})$

$f = \frac{720}{.39} = 1850.\ psi$

$P/A = \frac{125}{1.19} = 105.\ psi$

$l/r \cong \frac{30}{.49} = 61.2 \quad \therefore F_a = 17.3\ ksi$

OK

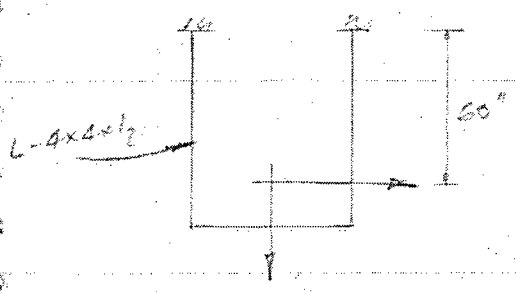

$M = 24^{\#} \times 60 = 1440.''\text{-}\#$

$f = \frac{1440}{2} = 720.\ psi$

$P/A = \frac{125}{3.75} = 33.3\ psi$

$l/r = \frac{60}{.78} = 77. \quad \therefore F_a = 15.69\ ksi$ OK

Connection

Cap. of ½"φ Thd'd. Stud in $T \cong .142^{\square''} \times 20 = 2.8^{K}$

$M_{max} = 1440''\text{-}\#$ $\quad A_{rm} = \frac{1.44}{2.8} = .5''$ (Nom. OK)

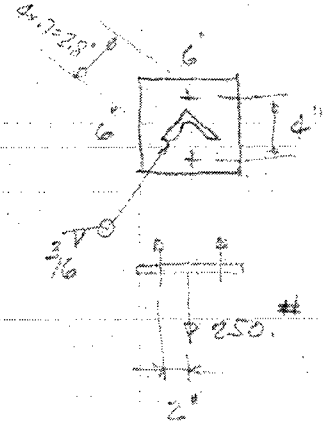

Pl Bend'g. $M_1 = 125^{\#} \times 1'' = 125.''\text{-}\#$

$M_2 = \frac{1440''\text{-}\#}{2.8} \times 1'' = \frac{510}{635.}''\text{-}\#$

$M/in \cong \frac{635.}{(6''-1'')} = 127.''\text{-}\#/''$

$f = \frac{127.}{.0233} = 5450.\ psi$

Use ⅜" Pl

13

BECHTEL

CALCULATION SHEET

23-4/X-1 0510 (4-68)

1 11/3/70

SIGNATURE ESR DATE

TITLE PEACH BOTTOM APS JOB NO. 6280

SUBJECT H&V DUCTS - SEISMIC ANALYSIS SHEET NO. 10

Evaluation of Duct splice $w_D = 30\ \#/'$ $l \equiv 16'$ c/c Max

Worst Cond. (Categ. III)

$Arm \approx \frac{2}{3}(16) = 10.7''$

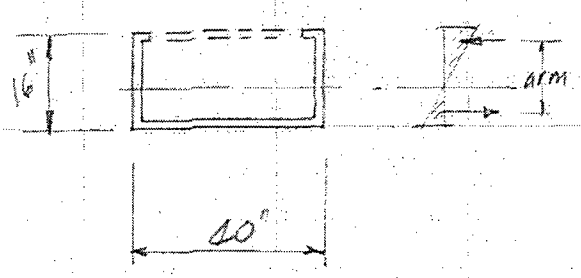

4 Span cont. bm. & Unif. Ld.

$M_{max} = -.107\,(30)(16)^2 = 825.\ ^{'\text{-}\#} = 9900.\ ^{''\text{-}\#}$

$T = \frac{9900}{10.7} = 925.\ ^{\#}$

$T/in = \frac{925}{40''} = 23.\ ^{\#}/''$

For large ducts, 2L- are used, which is more rigid yet:

Eccentr. $\approx \frac{1}{2}''$ & arm (S.S)

$M/in = 23^{\#} \times \frac{1}{2} = 11.5\ ^{''\text{-}\#}/''$

$S = \frac{(1)(.03)^2}{6} = .00015\ in^3/in$

For 1/8" angle $S = \frac{(1)(.125)^2}{6} = .0026\ in^3/in$

$f = \frac{11.5}{.0026} = 4400.\ psi$

Therefore, limit the spac'g. of support; over 8' c/c has to have L-1x1x1/8 at each flanged connection -

Shear

Assume bolts spaced 6" c/c around connection flange (from picture)

$Shear/bolt = \frac{30\ ^{\#}/' \times 16}{2(40''+16'') \times \frac{1}{6''}} = 25.6\ ^{\#}/bolt$ and $\frac{1}{4}''\phi$ bolt OK (A-307 Mat'l.)

BECHTEL

CALCULATION SHEET

23-4/X-1

0510 (4-68)

SIGNATURE ESR

DATE

TITLE PEACH BOTTOM

JOB NO. 6280

SUBJECT H & V DUCTS - SEISMIC ANALYSIS

SHEET NO. 10 A

Ref. dwg. S-108; S-94; S-86

Investigation of 18 uF bm for lateral load from frames:

Say 7/8" Flg. Thk. on 35' Span (Min. 9" Width)

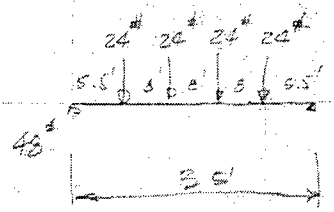

$M_{ss} = 48 \times 5.5 + 24 \times 8 = 456.^{1\text{-}\#}$

$S = \frac{(.875)(9)^2}{6} = 11.8 \text{ in}^3$

$f = \frac{12 \times 456}{11.8} = 463. \text{ psi}$ increase is very small -

$v = \frac{48^{\#}}{9 + \frac{7}{8}} = 6.1 \text{ psi}$

Floor beams designed for 4" conc. ld during const. which gives us enough to handle above loading. -

Eliminate kicker

115

BECHTEL

CALCULATION SHEET

23-4/X1

0510 (4-68)

SIGNATURE ESR

DATE

TITLE Peach Bottom APS

JOB NO. 6280

SUBJECT H & V Ducts - Seismic Analysis

SHEET NO. 11

Summary:

A review of Spectrum Response Curves for the Reactor & Radwaste Bld'gs (Cont. Room Area) for ½% Damp'g. shows that 20% G is max. value expected for rigid body motion.

The duct splice (flange connection) will have to be made with L-1x1x⅛ (which is standard) for spans of ducts larger than 8' c/c.-

Details shown for support (brace) of vertical risers will have to be adjusted in the field for clearances.

This analysis is deemed applicable to all rectangular ducts

0 0 0 0 0 0 0 7 9 4 1 8 6

~~512~~ 0510 (4-68)

BECHTEL

CALCULATION SHEET

W. Bertwell 10/12

SIGNATURE H. SOLORZANO 23-4/X-1 DATE 10/3/70

TITLE P.B. JOB NO. 6280.2

SUBJECT H&V Ducts - Dyn. Seismic Anal. FRESH AIR SYST. SHEET NO. ~~1~~ 12

INTRODUCTION

From observation of in-place ducts around control room area, a flexible syst. of supports is not practical, since deflect. in range of several inches are not possible, physically, at the hangers, due in part to the longitudinal stiffness of the duct system itself.
In this case, we would have to analyze it similarly to a piping flexible system, which is lengthy & time-consuming a process.
Therefore, a rigid system would be a more logical way to go in view of the above observations. -
We will try to determine what is required to do to the existing system as now placed to make it act rigid and also as an alternate for new systems not yet erected, what is the acceptable rigid syste
As a limit, a natural frequency of 30cps will be considered rigid body motion. - Damping used ½%

Supports are about 8' to 16' c/c presently
Material is 22 ga. ≅ 1.4#/□' (AISI wt = 1.25#/□') } From R. Armstrong
Insulat. wt ≅ 0.5#/□'
Say 2.0#/□' Total D.L. (no L.L. except during constr.)

Ref. dwg's. M-425 as marked by H & V group for system
426
407
447

Must [illegible] easily [illegible]?

BECHTEL

CALCULATION SHEET

0510 (4-68)

~~5/27~~ 23-4/X-1

SIGNATURE H. SOLORZANO DATE

TITLE P.B. JOB NO. 6280

SUBJECT H&V Ducts - Dynamic Seismic Analysis SHEET NO. ~~A~~ 13

METHOD OF ANALYSIS

Since we will use rigid system,

a) Determine required duct span to provide us with a natural frequency in the rigid range (≥30 cps)

b) Obtain acceleration for rigid system from Spectrum Response Curves - Investigate range of accelerations involved for ducts of the whole job and if the difference is not great, we will use the worst.

c) Determine equivalent static lateral Load from above acceleration F = ma

d) Determine stresses on existing system for above loading - Modify as required to satisfy criteria - Evaluate a new and possibly more efficient hanger system for future hangers - Rigidity criteria of support is the same as for ducts -

e) Check out details for integrity, including duct splice

f) Layout and detail hanger system

CONCLUSIONS

1.) Weights involved are extremly light; therefore, the proposed system lends itself readily for a rigid support system

~~2.) Ducts under 14" will have to be handled separately~~

3.) As detailed here, square and rectangular ducts should give a good account of themselves under a seismic disturbance of the magnitude postulated for our site.

4.) Max. accel. = 0.2G

18

BECHTEL

CALCULATION SHEET

~~5/27~~ 0510 (4-68)

23-4/X-1

SIGNATURE H. SOLORZANO DATE

TITLE P.B. JOB NO. 6280

SUBJECT H & V Ducts - Dynamic Seismic Requirements (EXISTING) CONT. ROOM SHEET NO. ~~6~~ 14

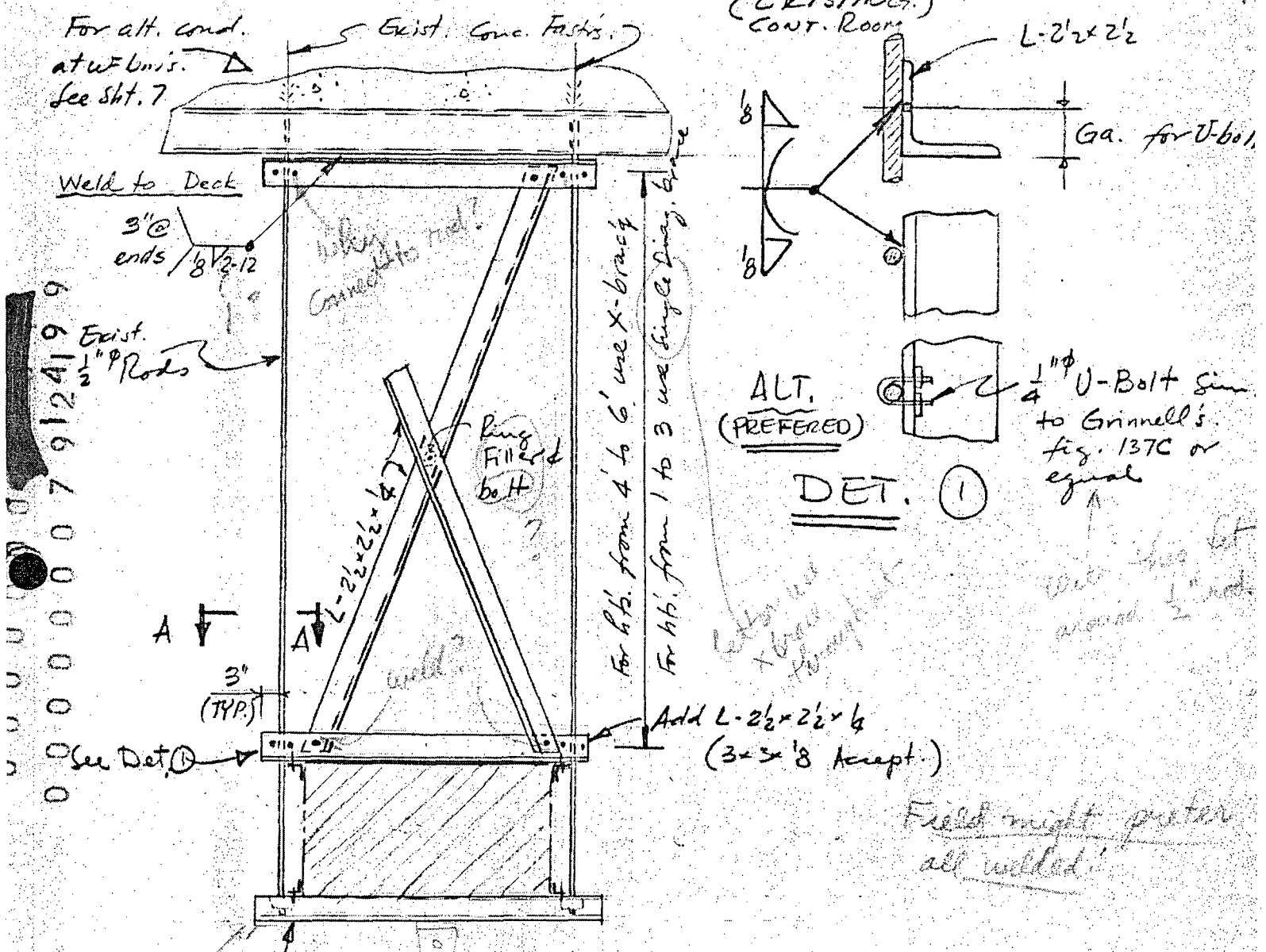

TYPICAL EXIST. SUPP'TS AT 8' c/c (±)

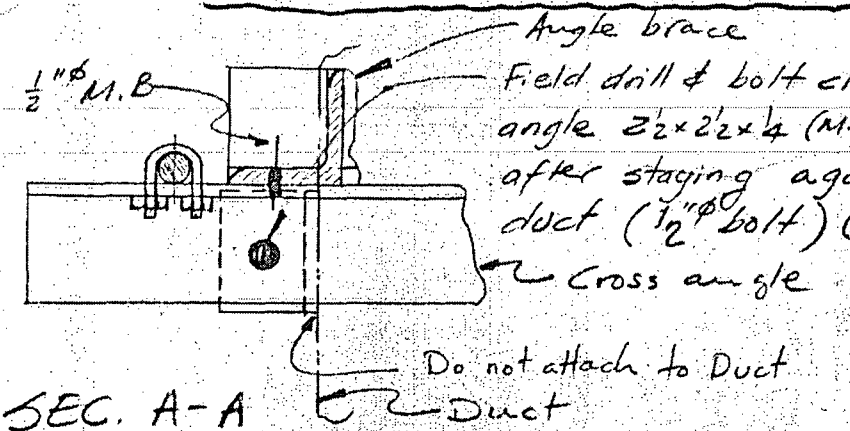

SEC. A-A

119

BECHTEL

CALCULATION SHEET

0510 (4-68)

~~5/2-7~~ 23-4/X-1

SIGNATURE H. SOLORZANO DATE

TITLE P.B. JOB NO. 6280

SUBJECT H & V Ducts – Dynamic Seismic Requirements (Exist'g.) Cont. Room SHEET NO. X 15

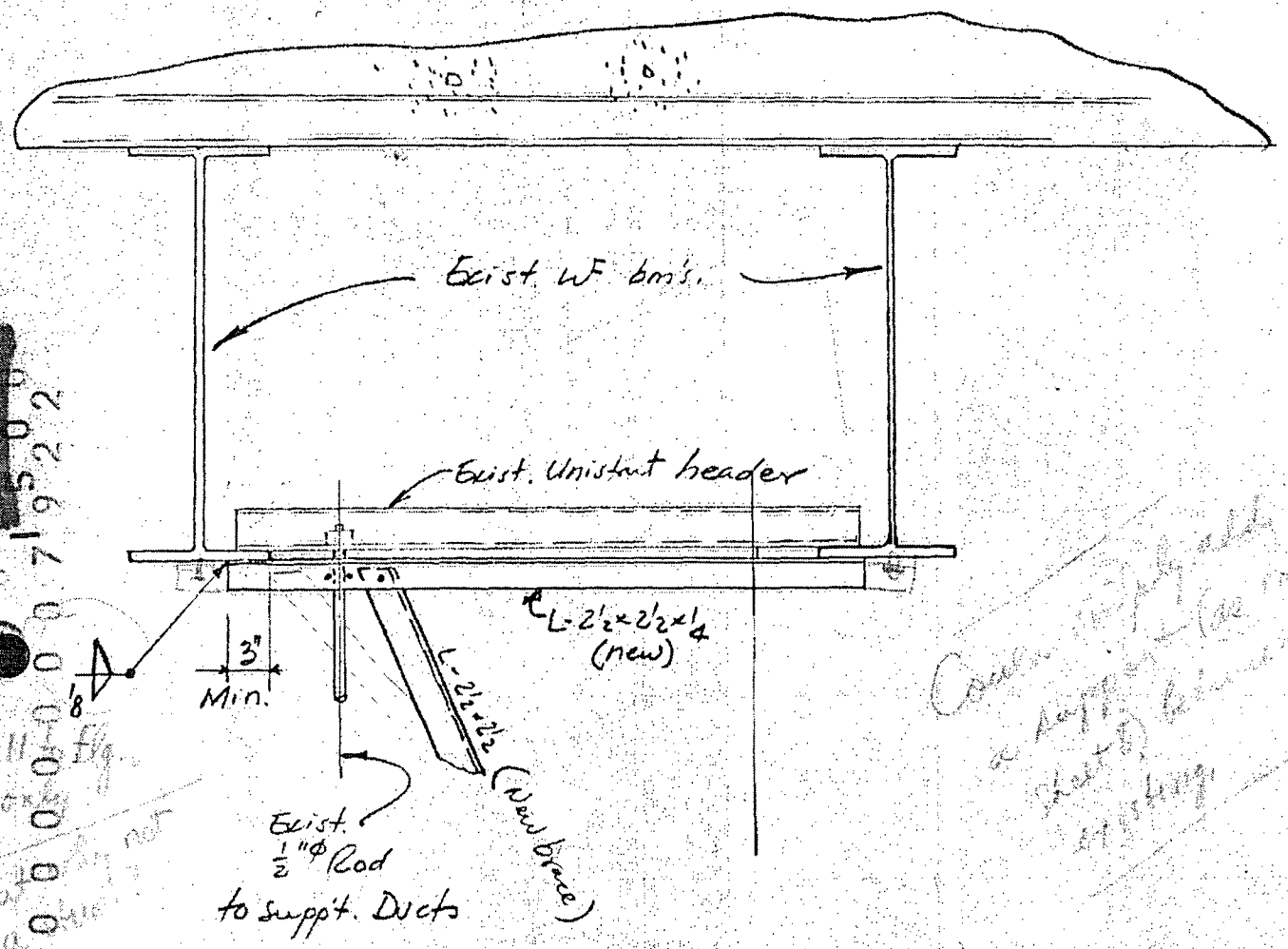

ALT. EXIST. CONDITION AT WF BM'S.

GENERAL NOTES:

1. Maximum Support Spacing shall be 4'-0" c/c and the stiffening shown shall apply to all ducts whose minimum dimension (smallest side) is 14" and larger. For ducts under 14" separate det. will be furnished
2. All stiffening members to be A-36 mat'l. and QA/QC documentation for Class I requirements applies – Bolts shall be ASTM A-307 (½"φ U.N.)
3. New hangers to be added per attached detail
4. Straps will not be allowed for hangers

120

BECHTEL

CALCULATION SHEET

0510 (4-68)

~~5/7~~ ~~8/~~

23-4 / X-1

SIGNATURE H. SOLORZANO DATE

TITLE P.B JOB NO. 6280

SUBJECT H & V Ducts – Dynamic Seismic Requirements (New hangers) [CONT. ROOM] SHEET NO. ~~9~~ 16

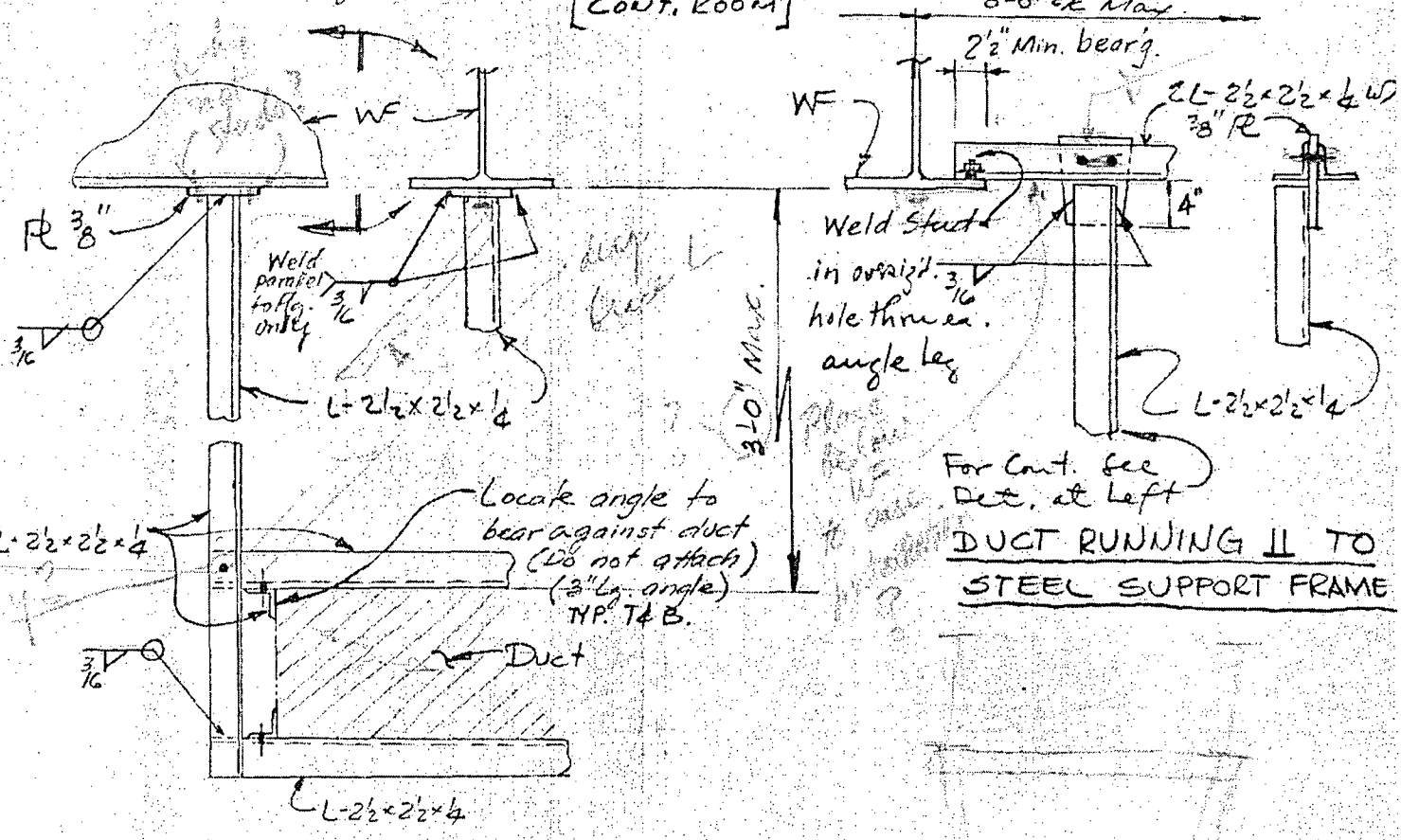

DUCT RUNNING ⊥ TO STEEL SUPPORT FRAME

DUCT RUNNING ⊥ TO STEEL SUPPORT FRAME

TYPICAL NEW SUPPORT DETAIL

NOTES:

1. Supports shall be 4'-0" c/c max.
2. Fabricate frames in one piece and slip under duct – bolt up & fit in place
3. This detail requires hangers to frame at bottom of steel frame members – not to the slab underside
4. For hanger heights over 3'-0" use diagonal braces from L-2½×2½×¼ – For details see sheets to existing hangers (Sht.
5. For additional notes & applicability of detail see sheets pertaining to existing hangers. (Sht. 7)
6.

0510 (4-68)

BECHTEL

CALCULATION SHEET

~~512~~

23-4/X-1

SIGNATURE H. SOLORZANO

DATE

TITLE P.B.

JOB NO. 6280

SUBJECT H & V Ducts - Dynamic Seismic Requirements

SHEET NO. ~~12~~ 17

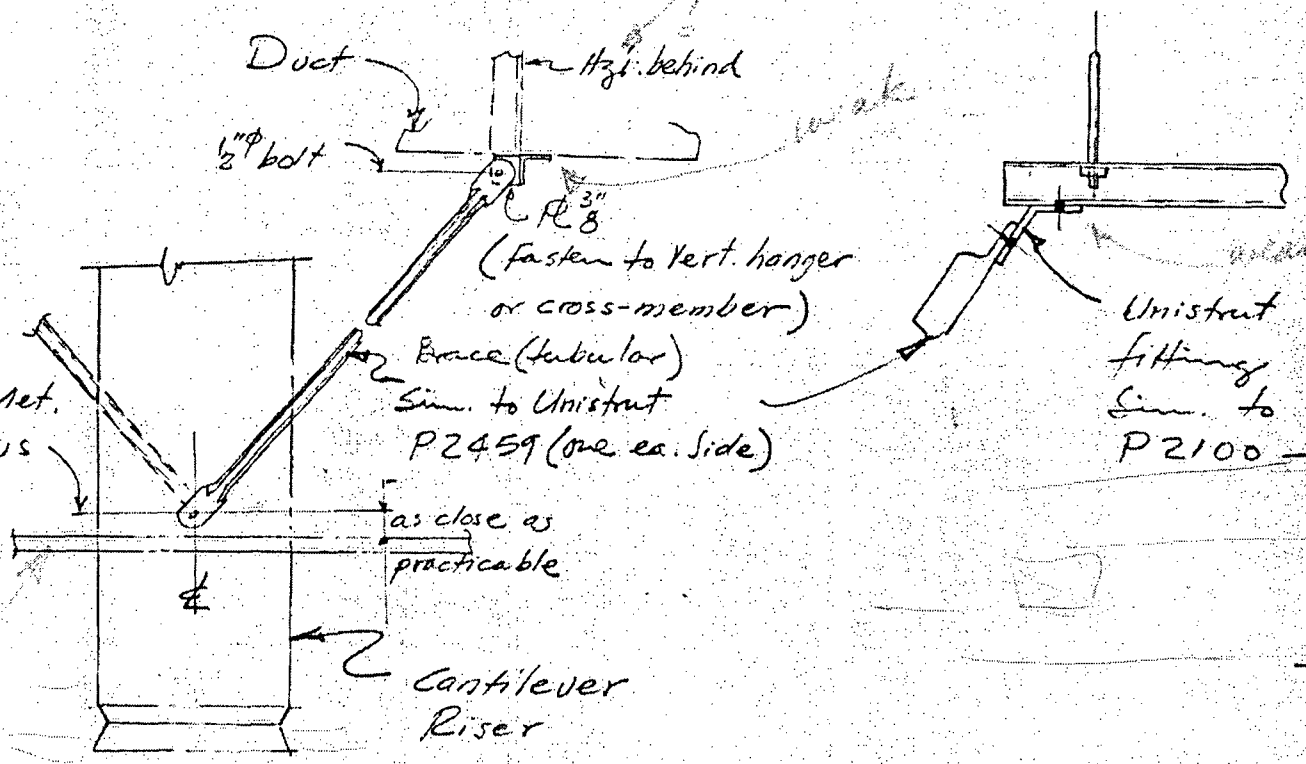

TYP. BRACE AT CANT. RISER

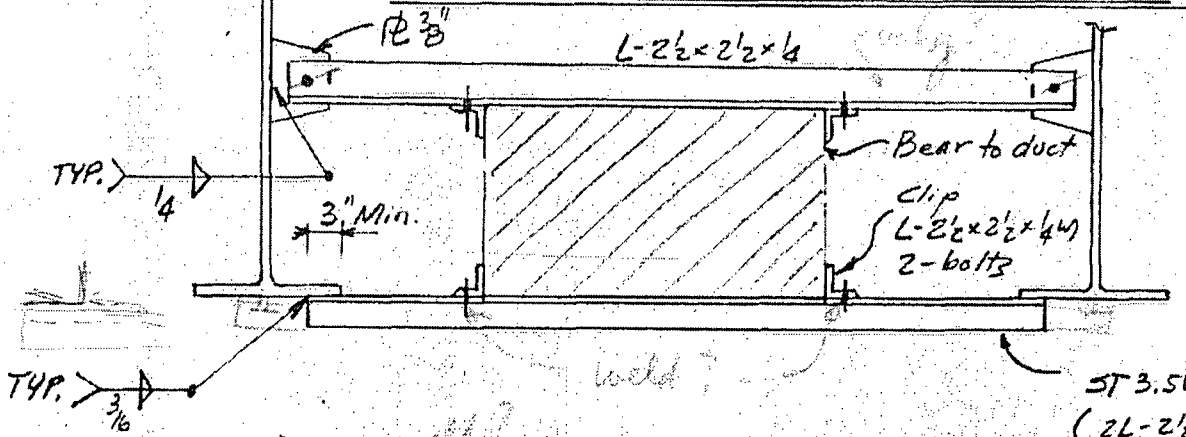

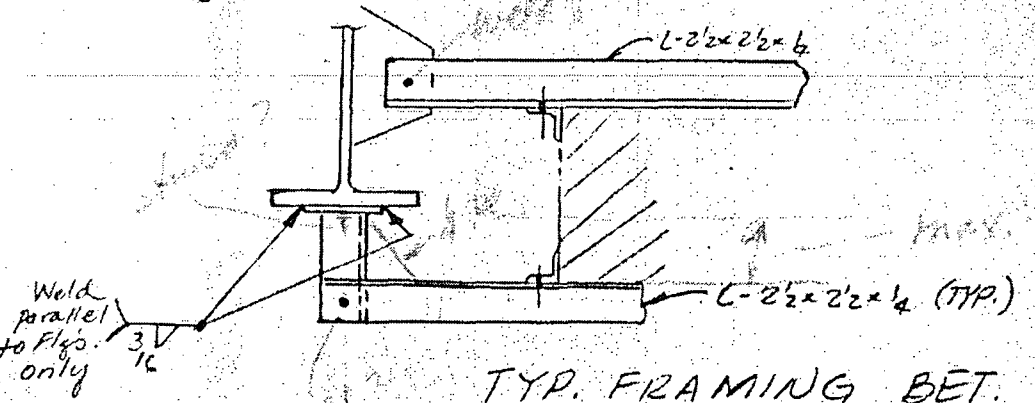

TYP. FRAMING BET. FL. MEMBERS

Peach Bottom
Job No. 6280

23-4/X-1
Sh. 17

MEMO
FROM – BOB McCAFFERY

To: Henry

looks good

bet

1503

0000000079 25

0000000079 25

BECHTEL

0510 (4-68)

BECHTEL

CALCULATION SHEET

~~Bob 5/7-7~~

SIGNATURE H. SOLORZANO 23-4/X-1 DATE 10/3/70

TITLE P.B. JOB NO. 6280.2

SUBJECT H&V Ducts - Dyn. Seismic Anal. FRESH AIR SYST. SHEET NO. 1 18

INTRODUCTION

From observation of in-place ducts around control room area, a flexible syst. of supports is not practical, since deflect. in range of several inches are not possible, physically, at the hangers, due in part to the longitudinal stiffness of the duct system itself.
In this case, we would have to analyze it similarly to a piping flexible system, which is lengthy & time-consuming a process.
Therefore, a rigid system would be a more logical way to go in view of the above observations. -
We will try to determine what is required to do to the existing system as now placed to make it act rigid and also as an alternate for new systems not yet erected, what is the acceptable rigid syste
As a limit, a natural frequency of 30cps will be considered rigid body motion. - Damping used ½%

Supports are about 8' to 16' c/c presently
Material is 22 ga. ≅ 1.4#/□' } (AISI wt ≅ 1.25#/□') From R. Armstrong
Insulat. wt ≅ 0.5#/□'
Say 2.0#/□' Total D.L. (no L.L. except during constr.)

Ref. dwg's. M-425 as marked by H & V group for system
426
407
447

BECHTEL

CALCULATION SHEET ~~5/27~~ 23-4/X-1 0510 (4-68)

SIGNATURE H. SOLORZANO DATE

TITLE P.B. JOB NO. 6280

SUBJECT H & V Ducts - Dynamic Seismic Analysis SHEET NO. ~~A~~ 19

METHOD OF ANALYSIS

Since we will use rigid system,

a) Determine required duct span to provide us with a natural frequency in the rigid range (≥30 cps)

b) Obtain acceleration for rigid system from Spectrum Response Curves - Investigate range of accelerations involved for ducts of the whole job and if the difference is not great, we will use the worst.

c) Determine equivalent static lateral load from above acceleration $F = ma$

d) Determine stresses on existing system for above loading - Modify as required to satisfy criteria - Evaluate a new and possibly more efficient hanger system for future hangers - Rigidity criteria of support is the same as for ducts -

e) Check out details for integrity, including duct splice

f) Layout and detail hanger system

CONCLUSIONS

1.) Weights involved are extremly light, therefore, the proposed system lends itself readily for a rigid support system

2.) Ducts under 14" will have to be handled separately

3.) As detailed here, square and rectangular ducts should give a good account of themselves under a seismic disturbance of the magnitude postulated for our site.

BECHTEL

CALCULATION SHEET

0310 (4-68)

~~5/27~~ 23-4/X-1

SIGNATURE H. SOLORZANO

DATE

TITLE P.B.

JOB NO. 6280

SUBJECT H & V Ducts - Dynamic Seismic Requirements (EXISTING) CONT. ROOM

SHEET NO. ~~6~~ 20

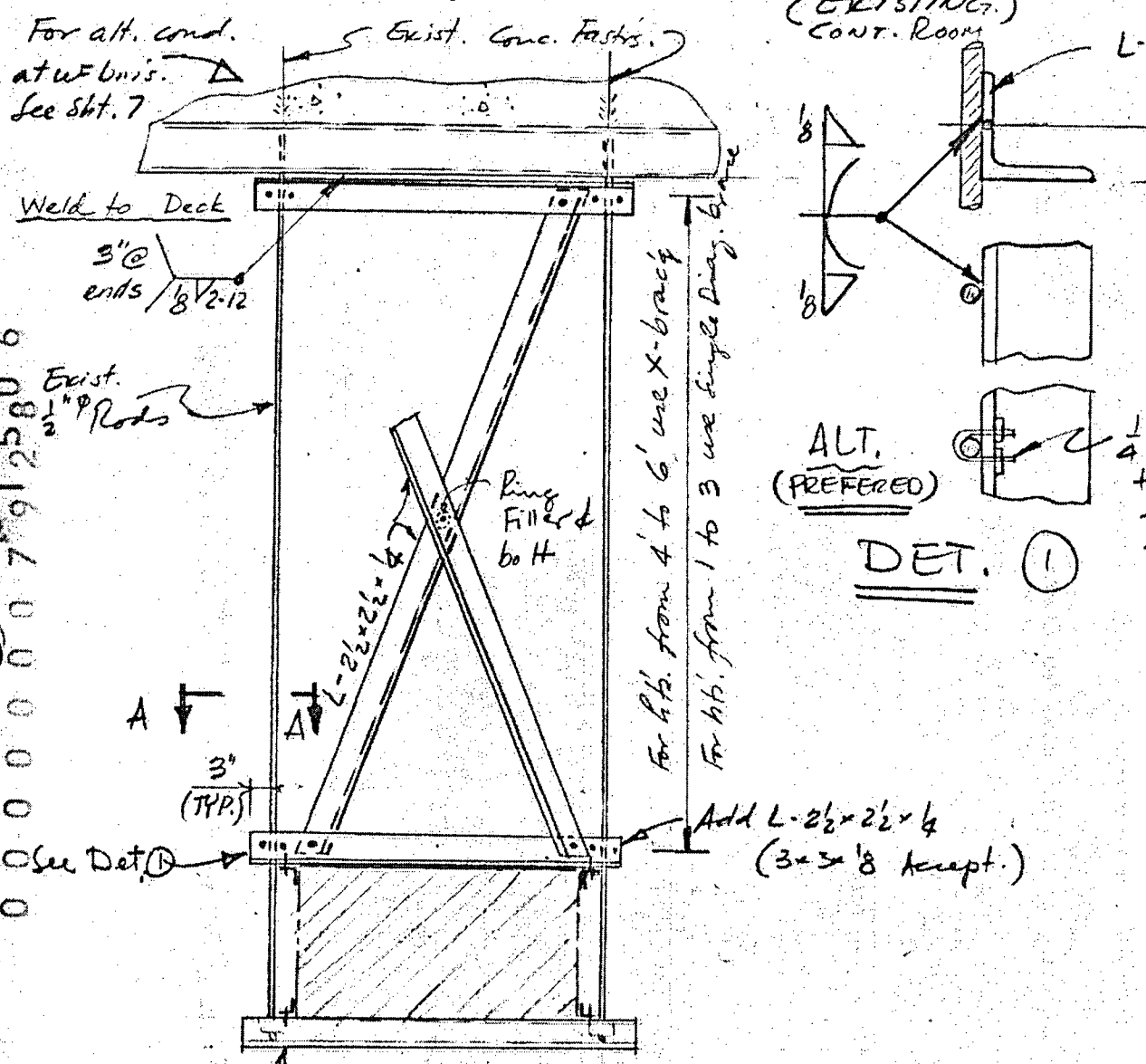

TYPICAL EXIST. SUPP'TS AT 8' c/c (±)

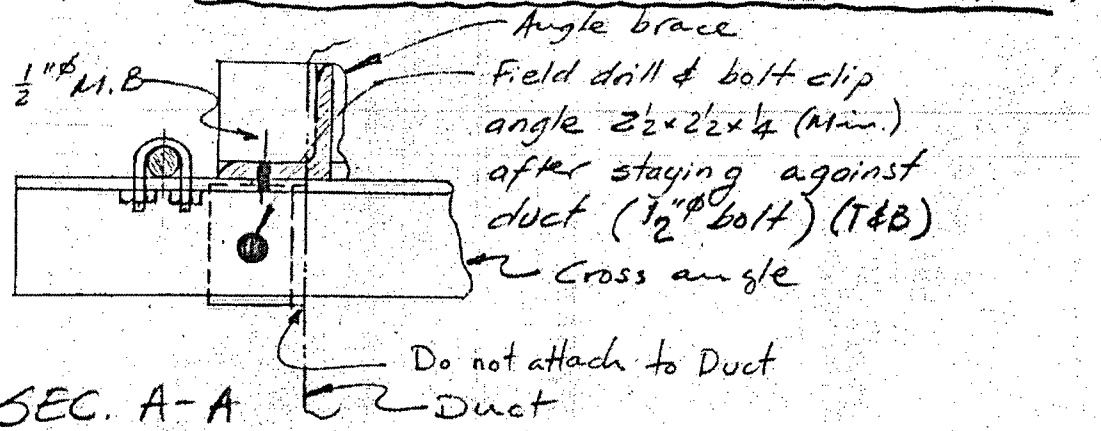

SEC. A-A

BECHTEL

CALCULATION SHEET

0510 (4-68)

~~5/7~~ 23-4/X-1

SIGNATURE H. SOLORZANO DATE

TITLE P.B. JOB NO. 6280

SUBJECT H & V Ducts – Dynamic Seismic Requirements (Exist'g.) Cont. Room SHEET NO. 7 21

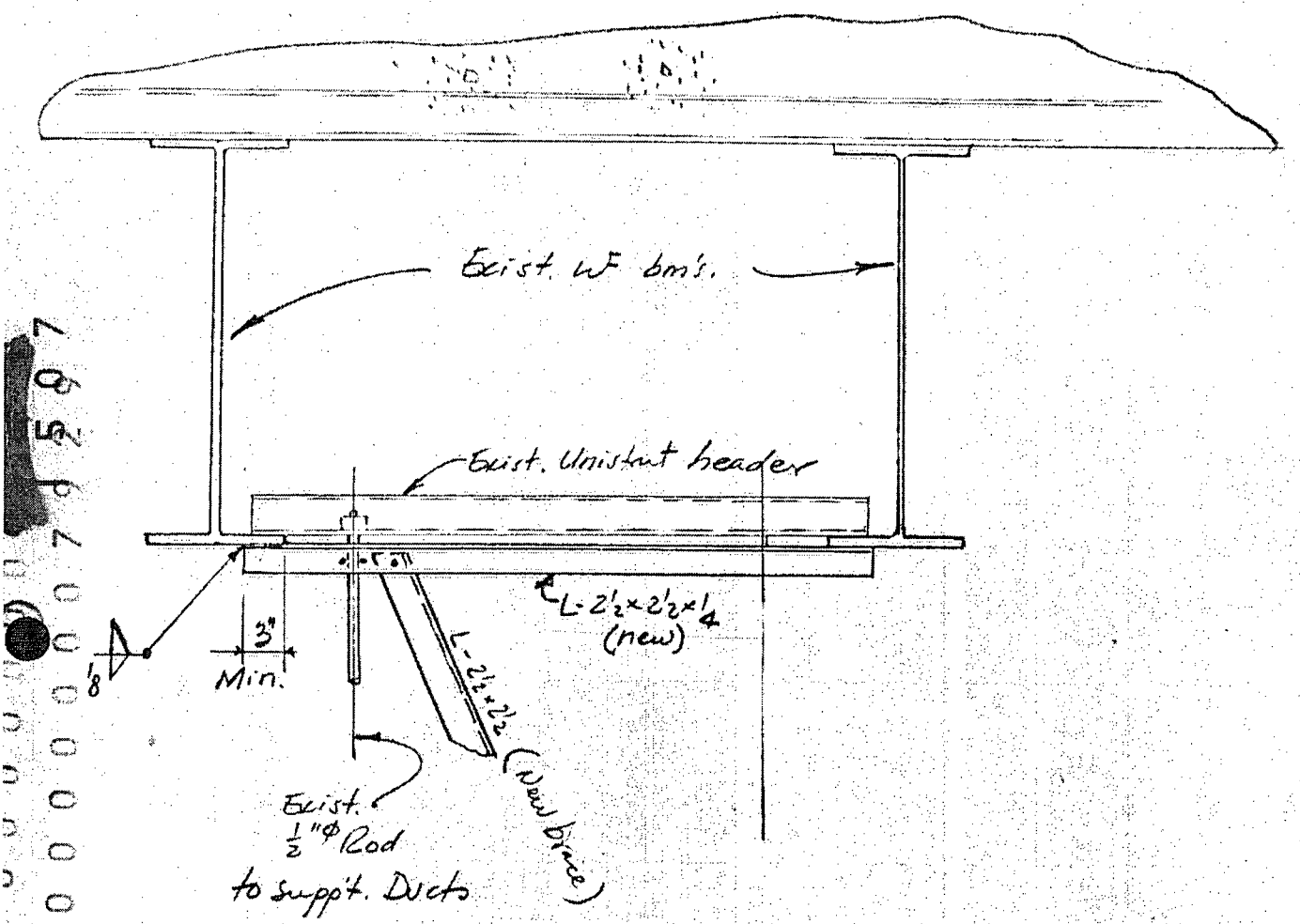

ALT. EXIST. CONDITION AT WF BM'S.

GENERAL NOTES:

1. Maximum Support Spacing shall be 4'-0" c/c and the stiffening shown shall apply to all ducts whose minimun dimension (smallest side) is 14" and larger. For ducts under 14" separate det. will be furnished
2. All stiffening members to be A-36 mat'l. and QA/QC documentation for Class I requirements applies – Bolts shall be ASTM A-307 (½"Φ U.N.)
3. New hangers to be added per attached detail
4. Straps will not be allowed for hangers

126

0510 (4-68)

BECHTEL

CALCULATION SHEET

~~5/2~~ 23-4/X-1

SIGNATURE H. SOLORZANO DATE

TITLE P.B JOB NO. 6280

SUBJECT H & V Ducts – Dynamic Seismic Requirements (New hangers) SHEET NO. ~~9~~ 22

[CONT. ROOM]

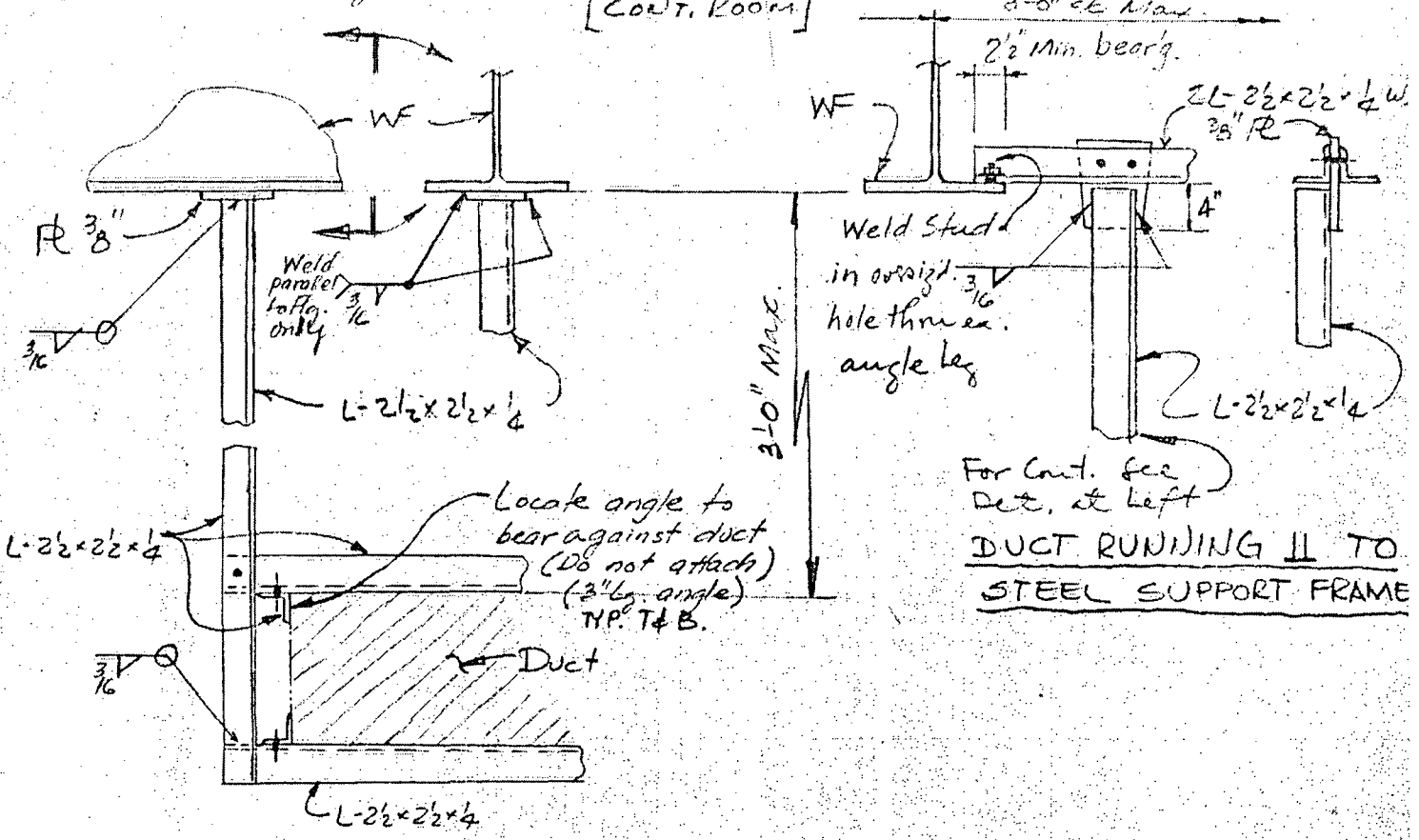

DUCT RUNNING ⊥ TO STEEL SUPPORT FRAME

DUCT RUNNING ∥ TO STEEL SUPPORT FRAME

TYPICAL NEW SUPPORT DETAIL

NOTES:

1. Supports shall be 4'-0" c/c max.
2. Fabricate frames in one piece and slip under duct – bolt up & fit in place
3. This detail requires hangers to frame at bottom of steel frame members – not to the slab underside
4. For hanger heights over 3'-0" use diagonal braces from L-2½×2½×¼ – For details see sheets to existing hangers (Sht
5. For additional notes & applicability of detail see sheets pertaining to existing hangers. (Sht. 7)
6.

127

0510 (4-68)

BECHTEL

CALCULATION SHEET

23-4/X-1 ~~5/Z 7~~

SIGNATURE H. SOLORZANO

DATE

TITLE P. B.

JOB NO. 6280

SUBJECT H & V Ducts - Dynamic Seismic Requirements

SHEET NO. ~~12~~ 23

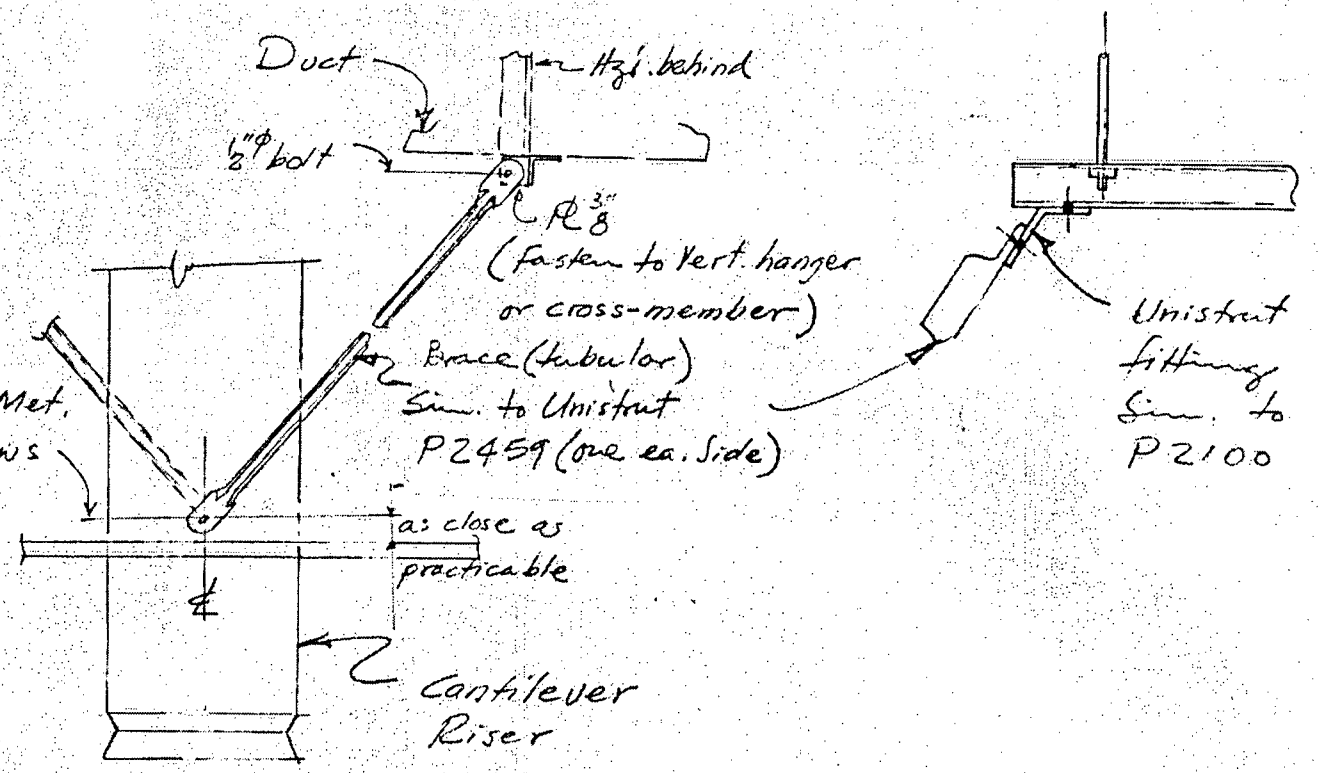

TYP. BRACE AT CANT. RISER

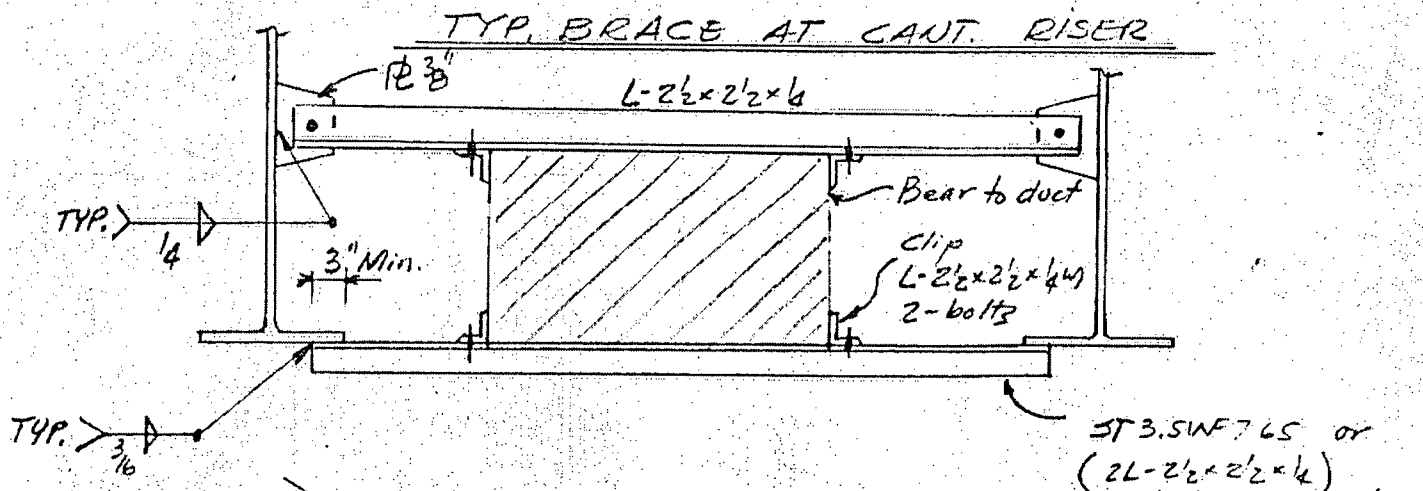

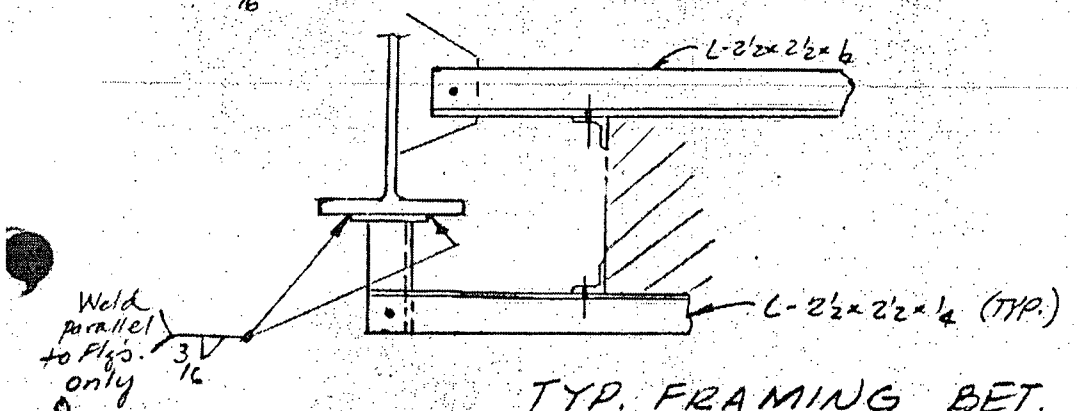

TYP. FRAMING BET. FL. MEMBERS

28

0 0 0 0 0 0 0 7 9 1 3 5 1 0 9

BECHTEL

CALCULATION SHEET

~~5/27~~ 23-4/x-1

128-105101 4-68

SIGNATURE ESR

DATE 1/6/70

TITLE P.B.

JOB NO. 6280-2

SUBJECT H&V Ducts & Valve at Radwaste Struct.

SHEET NO. ~~1~~ 24

Ref. dwg. M-425 & M-447 - Plans & Sec. J/M-447

From R. Armstrong Valve wt = 1200.#

Trib. length of duct = 25'.

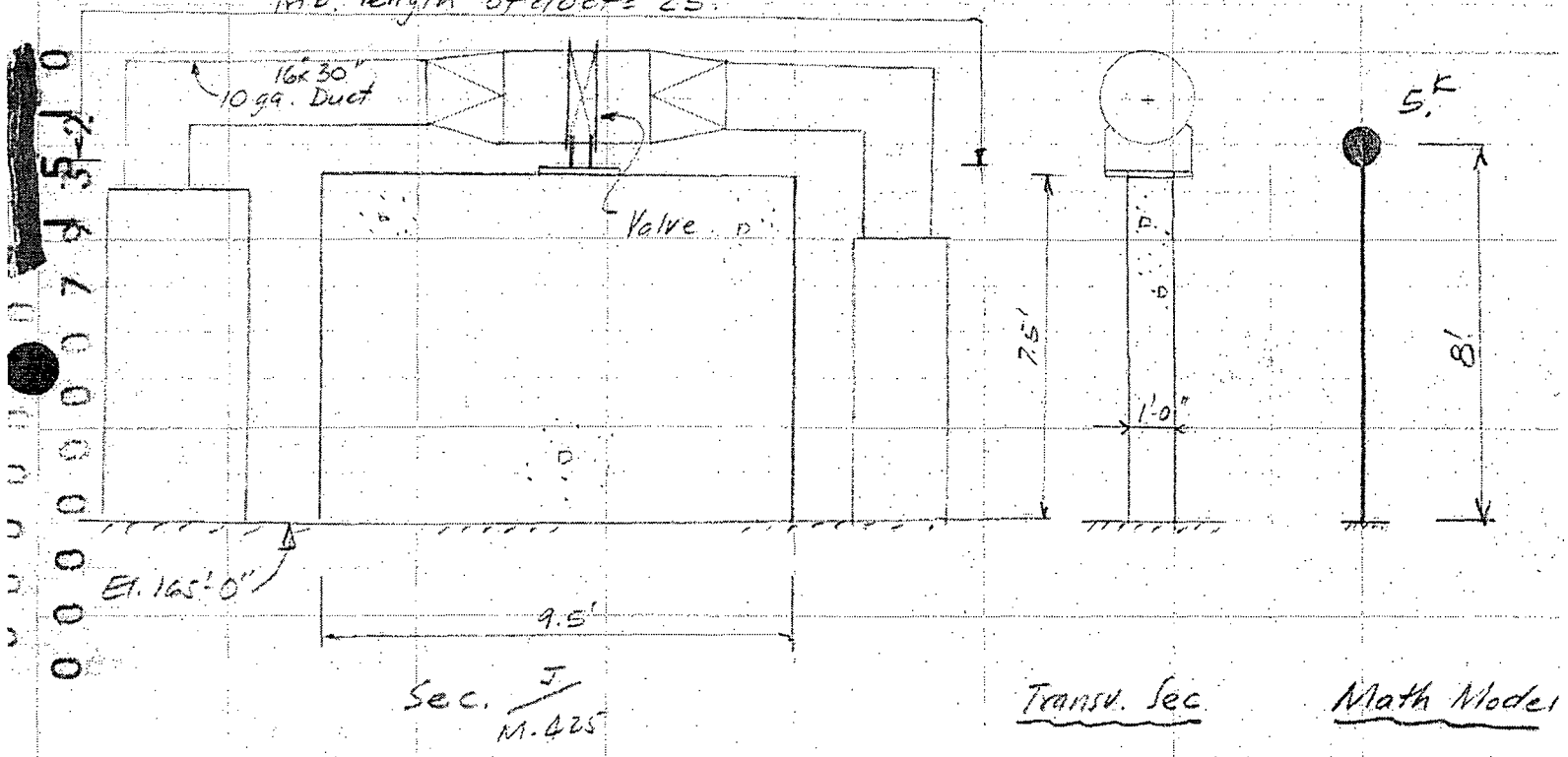

10ga. duct = 900 g/ft² = 5.6 #/ft² Perim = 7.5' ∴ wt/ft = 5.6 × 7.5 = 42. #/ft × 25' = 1060.#

12" Conc. Wall = 150 #/ft³ × 9.5' × (33/140 × 7.5') = 2520. lbs

→ Timoshenko

Total Mass:

Duct = 1060.
Valve = 1200.
Wall = 2520.
4780.#

Use 5,000. lbs

Wall $I = \frac{(12 \times 9.5)(12)^3}{12} = 16,400.\ in^4$

129

BECHTEL

CALCULATION SHEET

128 (0510) 4-68

~~5/27~~ 23-4/X-1

SIGNATURE ESR

DATE

TITLE Peach Bottom APS

JOB NO. 6280

SUBJECT H & V Ducts

SHEET NO. ~~2~~ 25

Static Defl. for 100% G :

$$\Delta_{ST} = \frac{PL^3}{3EI} = \frac{5^k \cdot (96)^3}{3 \times 3.2 \times 10^3 \times 16,400} = \underline{0.0295''}$$

$$\sqrt{\Delta_{ST}} = 0.172$$

$$f_{nat'l} = \frac{188}{\sqrt{\Delta}} = \frac{188}{0.172} = 1090 \text{ RPM} = \underline{\underline{18.2 \text{ cps}}}$$

From Floor Acc. Spectrum @ El. 165'-0" E-W direct. & 2% damp'g. (Radwaste Bld'g. Area)

$a_{\text{design EQ}} \cong 0.3\ g$ Max Cred EQ $a = 0.72\ g$

$$F = 0.3 \times 5^k = \underline{\underline{1.5^k}}$$

Check of Conn. Det. at Valve

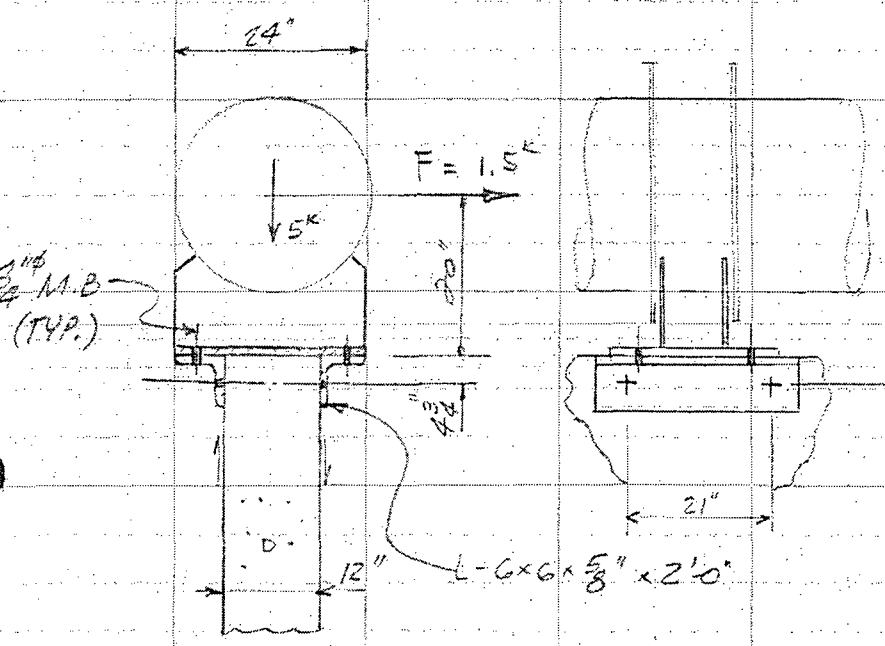

$M_{OT} = 1.5^k \times 20'' = 30.''^{-k}$

$\text{Shear} = \frac{30''^{-k}}{12''} = 2.5^k \uparrow\downarrow$ or

$= \frac{30''^{-k}}{21} \cong 1.5^k$

Use 2-3/4"φ A.B. good for 3^k (Tot.)

$P/A = \frac{5^k}{24 \times 21} \cong 10.$ psi

$S_{req'd} = \frac{30}{27_{ksi} \times 21''} = .053\ in^3/''$

$\boxed{9/16''\ PL}$

30

BECHTEL

CALCULATION SHEET

128 (0510) 4-68

~~5/2-7~~ 23-4/X-1

SIGNATURE FSR

DATE

TITLE PEACH BOTTOM APS

JOB NO. 6280

SUBJECT H & V DUCTS

SHEET NO. 31 / 26

Wall check

$M_{cant.} = 1.5^k \times 8' = 12.^{1-k}$ & $M/A = \frac{12}{9.5} = 1.26^{1-k}/ft$

$d_{req'd.} = 2.2\sqrt{1.26} = 2.5''$ OK

$A_s = \frac{1.26}{1.44 \times 9} = .0975\ in^2/ft$

Min $A_s = .0015 \times 12 \times 12 = 0.216''$ or $.108''$ EF OK

Shear $v = \frac{1.5^k}{9.5' \times 12 \times 12} = .0011\ ksi = 1.\ psi$ OK

31