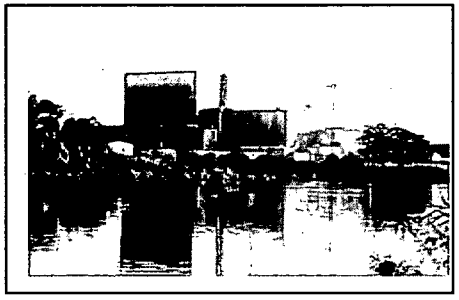

NMC SM

Committed to Nuclear Excellence

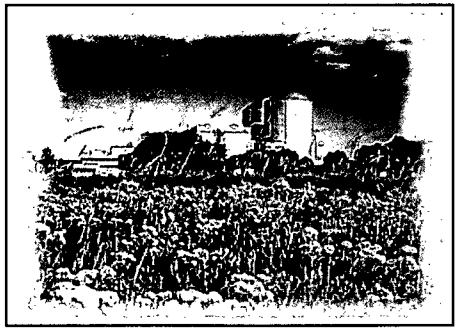

Prairie Island ISFSI

TN-40HT LAR

Pre-Submittal Meeting

January 24, 2008

Agenda

- Introductions
- Purpose of Meeting
- Prairie Island ISFSI Background
- ISFSI SAR Organization/Format
- Overview TN-40 & TN-40HT Cask Design
- Summary TN-40HT Thermal Analysis
- Summary TN-40HT Structural Analysis
- Summary TN-40HT Criticality Analysis
- Summary TN-40HT Shielding Analysis
- Project Time Line

NMC
Committed to Nuclear Excellence

Introductions

- NMC
  - Ken Albrecht – GM Fleet Major Projects
  - Lee Samson – Prairie Island Spent Fuel Storage Project Manager
  - Lynn Johnson – NSSS Supervisor
  - Dale Vincent – Nuclear Licensing
  - Oley Nelson – TN-40HT Project Engineer
- TN
  - Dr. Peter Shih – Manager, Structural and Thermal Analysis
  - Prakash Narayanan – Manager, Nuclear Analysis
  - Steve Streutker – Project Engineer
  - Marie-Anne Brudieu – Project Manager
  - Don Shaw – Licensing Manager

NMC
Committed to Nuclear Excellence

Purpose of Meeting

Provide NRC with information on the planned Prairie Island ISFSI LAR including changes to proposed SAR organization/format, cask design, summary of design analyses, and project time line.

NMC
Committed to Nuclear Excellence

Prairie Island ISFSI Background

NMC
Committed to Nuclear Excellence

Prairie Island ISFSI Background

- 30 Miles SE of Minneapolis/St Paul
- Two, 2-Loop Westinghouse PWR Reactors
- 14X14 Fuel
- ISFSI Licensed in 1993
- Licensed Capacity of 48 TN-40 Casks
- Site Specific License

NMC
Committed to Nuclear Excellence

Prairie Island ISFSI Background

- One Integral License for Both ISFSI Site and TN-40 Cask
  - TN-40 Cask Licensing Basis in Site Specific License
  - No TN-40 Topical Report, CoC, or 10 CFR 72.212 Report

NMC
Committed to Nuclear Excellence

Prairie Island ISFSI Background

- TN-40 Cask Licensed to Store
  - ≤40 14x14 Fuel Assemblies
  - Fuel Irradiated at PINGP
  - ≤3.85 w/o U-235 Enrichment
  - ≤45,000 MWD/MTU Burnup
  - Minimum 10 Years Cooling
  - Maximum 0.675 kW/Fuel Assembly

NMC
Committed to Nuclear Excellence

Prairie Island ISFSI Background

- Enough Eligible Fuel to Load 29 TN-40 Casks
- 24 TN-40 Casks Currently Loaded
- PINGP Fuel > 3.85 w/o U-235 Enrichment Since 1990
- PINGP Life Extension Requires Dry Storage of > 3.85 w/o and > 45,000 MWD/MTU Fuel

NMC
Committed to Nuclear Excellence

Prairie Island ISFSI Background

- Need Storage for 4.95 w/o U-235 Enriched Fuel
- Need Storage for 57,000 MWD/MTU Fuel Burnup
- Propose TN-40HT Design Based on TN-40 Design With Changes to Accommodate
  - ≤5 w/o U-235 Enrichment
  - ≤60,000 MWD/MTU Burnup

NMC
Committed to Nuclear Excellence

ISFSI SAR Organization/Format

- LAR SAR Updates Were Initially Going to be Based on NUREG-1536
- NRC Suggested Consider Format Based on NUREG-1567
- After Review of NUREGs, Changed Format to be Identical to Existing SAR

NMC
Committed to Nuclear Excellence

ISFSI SAR Organization/Format

- Place TN-40HT Information in an Addendum
- To Maximum Extent Practical, Used Same Subsection Headings
- Where Current SAR Information is Independent of Cask Design or Applicable to TN-40HT, Will Refer to Section in Body of SAR

NMC
Committed to Nuclear Excellence

Overview TN-40 & TN-40HT Design

TN-40 / TN-40HT Cask

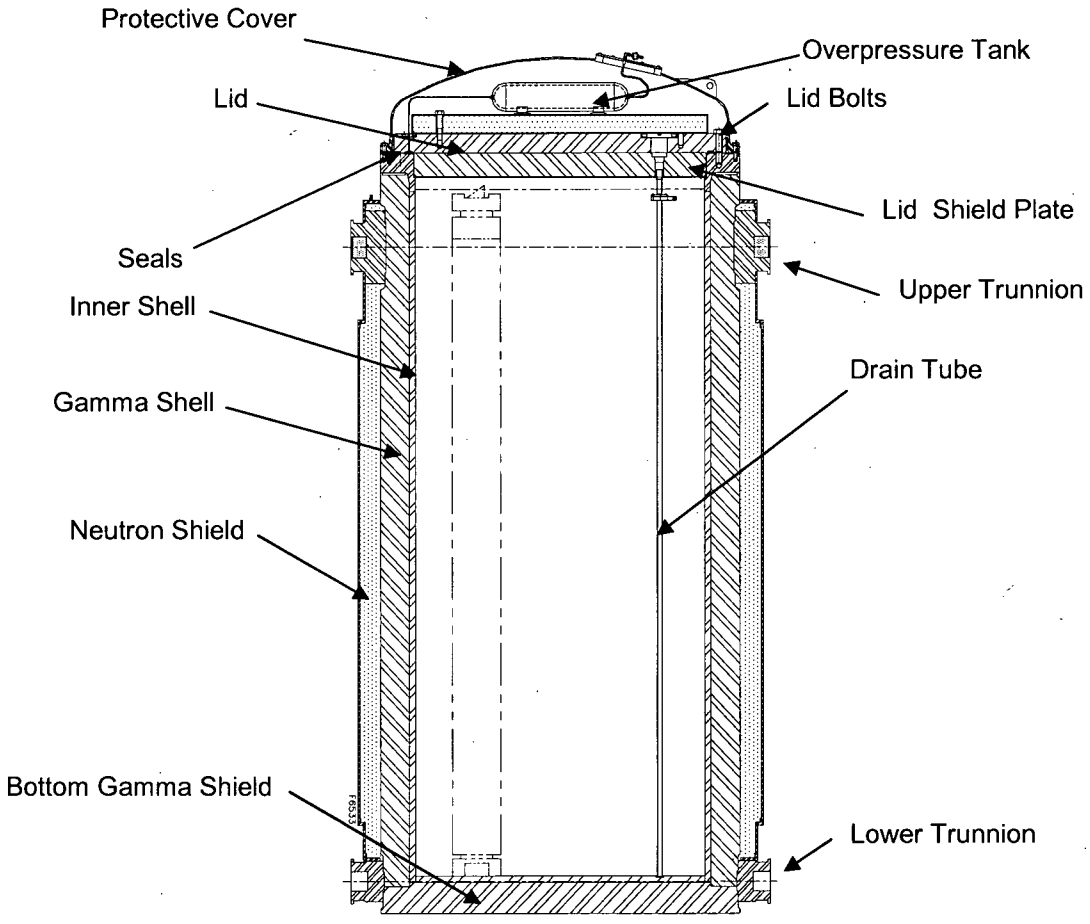

NMC
Committed to Nuclear Excellence

TN-40 Modifications

- Improved Heat Transfer Basket Design
  - Slotted Al and Neutron Absorber Plates Form Egg-Crate Structure
  - Improved Heat Conduction Path
  - 0.80 kW/Fuel Assembly
- Stronger
  - Thicker SS Fuel Compartment Walls
  - SS Cells Fusion Welded to SS Support Bars
  - Stronger Rails
- Increased Absorber Loading

Note: Construction and Materials Similar to TN-68 cask (CoC #1027)

NMC
Committed to Nuclear Excellence

Overview TN-40 & TN-40HT Design

Component	TN-40 (lbs)	TN-40HT (lbs)
Cask Shell	116,334	105,849
Lid	13,907	13,314
Bottom Assembly	18,866	15,579
Neutron Shield	20,022	22,062
Top Neutron Shield	1,692	1,638
Overpressure Tank	Not Included	131
Protective cover	1,465	1,362
Upper Trunnion	354	667
Lower Trunnion	209	253
Basket	**15,841**	**28,488**
40 Fuel Assemblies	52,000	52,000
Misc	Not Included	1,000
Total	240,690	242,343

NMC
Committed to Nuclear Excellence

Overview TN-40 & TN-40HT Design

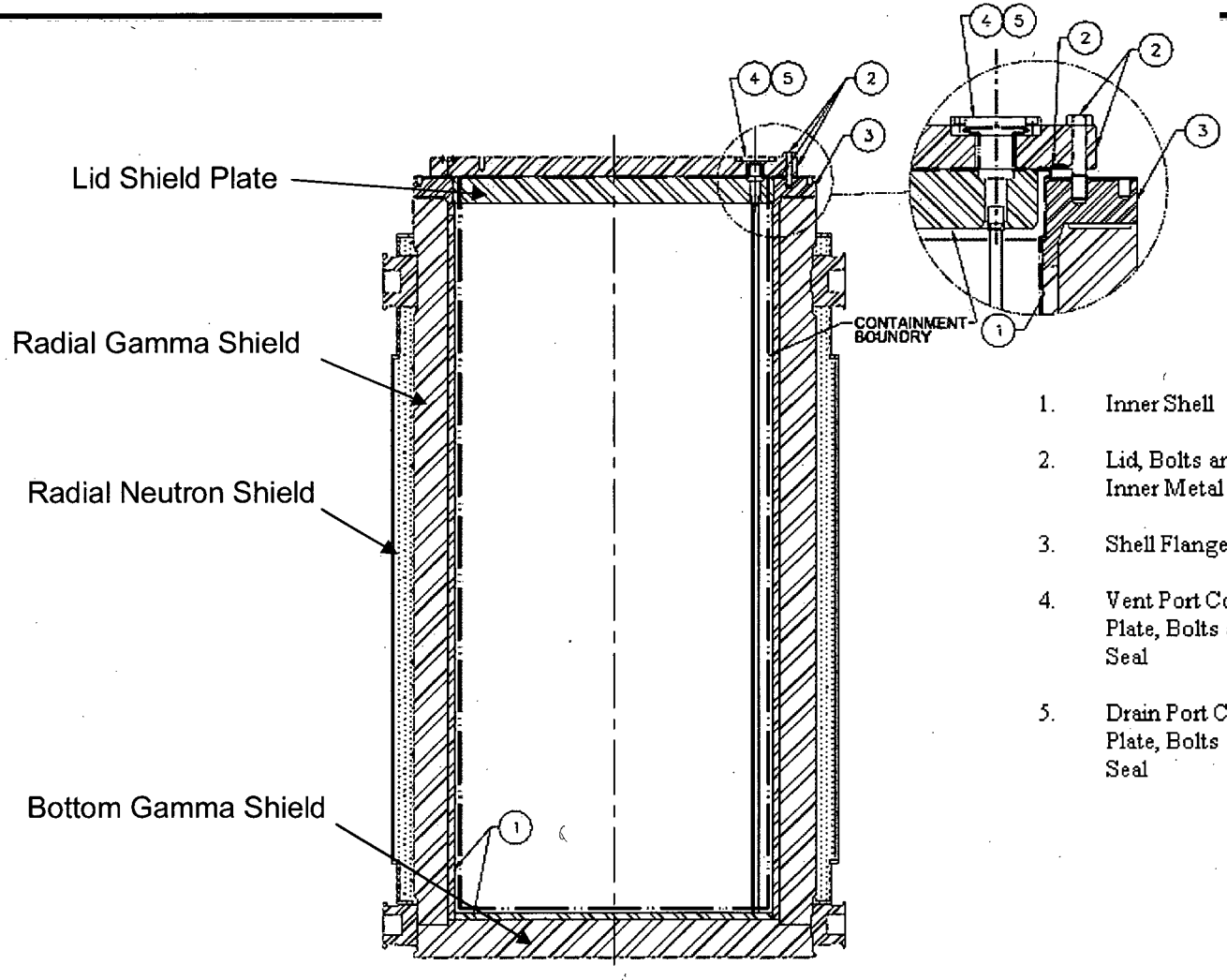

1. Inner Shell
2. Lid, Bolts and Inner Metal Seal
3. Shell Flange
4. Vent Port Cover Plate, Bolts and Seal
5. Drain Port Cover Plate, Bolts and Seal

NMC
Committed to Nuclear Excellence

Overview TN-40 & TN-40HT Design

Component	TN-40 (Inches)	TN-40HT (Inches)
Cavity Diameter	72	72
Inner Shell	1.5	1.5
Radial Gamma Shell	**8.0**	**7.25**
Radial Neutron Shell	**4.5**	**5.25**
Outer Shell	0.5	0.5
Outside Diameter	101.0	101.0
Bottom Gamma Shield	**8.75**	**7.25**
Cavity Height	163	163
Lid Shield Plate	**6.0**	**5.5**
Lid Outer Plate	4.5	4.5
Overall Height	**183.75**	**181.75**
Height of Top Trunnions	155.25	155.25

NMC
Committed to Nuclear Excellence

Overview TN-40 & TN-40HT Design

Component	TN-40 (lbs)	TN-40HT (lbs)
Cask Shell	116,334	105,849
Lid	13,907	13,314
Bottom Assembly	18,866	15,579
Neutron Shield	20,022	22,062
Top Neutron Shield	1,692	1,638
Overpressure Tank	Not Included	131
Protective cover	1,465	1,362
Upper Trunnion	354	667
Lower Trunnion	209	253
Basket	15,841	28,488
40 Fuel Assemblies	52,000	52,000
Misc	Not Included	1,000
Total	**240,690**	**242,343**

NMC
Committed to Nuclear Excellence

Overview TN-40 & TN-40HT Design

- TN-40HT Designed to Use Existing Equipment
  - Cask Lift Rig
  - Cask Transport Vehicle
  - Vacuum Drying
- Minimal Impact to Existing Loading and Transfer Operations

NMC
Committed to Nuclear Excellence

Summary of TN-40HT Thermal Analysis

- Thermal Design Criteria
  - 752 °F Fuel Cladding for Normal Operation
  - 1058 °F Fuel Cladding for Accident Conditions
  - 536 °F for Metallic Seals
  - 300 °F for Neutron Shield Bulk Average
- Input to Structural and Other Analyses

NMC
Committed to Nuclear Excellence

Summary of TN-40HT Thermal Analysis

- ANSYS Finite Element Models
  - Full Length Cask Model
  - Sub-model of Cask Top

NMC
Committed to Nuclear Excellence

Summary of TN-40HT Thermal Analysis

Full Length Cask Model

- No Heat Transfer Between Top of Lid and Protective Cover
- No Convective Heat Transfer Within Cask Cavity
- Models Gaps Between Components
- Models Temperature Dependant Thermal Properties

NMC
Committed to Nuclear Excellence

Summary of TN-40HT Thermal Analysis

Sub-model of Cask Top

- Models Radiation Heat Transfer Between Top Neutron Shield and Protective Cover
- Used to Determine Seal Temperatures

NMC
Committed to Nuclear Excellence

Summary of TN-40HT Thermal Analysis

Steady State Boundary Conditions

- Daily Average Temperatures of -40 ºF and 100 ºF
- 0.8 kW per Fuel Assembly (Total 32 kW)
- Axial Peaking Factor of 1.1
- Solar Heat Load Based on 10 CFR 71.

NMC
Committed to Nuclear Excellence

Summary of TN-40HT Thermal Analysis

Normal Conditions 100 °F Ambient

Component	Temperature (°F)	Limit (°F)
Fuel Cladding	680	752
Inner Shell	305	Not Specified
Gamma Shell	298	Not Specified
Radial Resin	285	300
Outer Shell	260	Not Specified
Top Resin	191	300
Lid Seal	184	536
Vent & Drain Port Seal	185	536

NMC
Committed to Nuclear Excellence

Summary of TN-40HT Thermal Analysis

Fire Boundary Conditions

- 15 Minute Fire
- Flame Temperature of 1475 °F (Based on 10 CFR 71)
- Solar Absorptivity Set to 1 During Post-Fire Cooldown
- Ambient Temperature set to 100 °F During Post-fire Cooldown

NMC
Committed to Nuclear Excellence

Summary of TN-40HT Thermal Analysis

Fire Accident

Component	Temperature (°F)	Time (hr)	Limit (°F)
Fuel Cladding	772	∞	1058
Inner Shell	370	∞	Not Specified
Gamma Shell	361	∞	Not Specified
Outer Shell	913	End of Fire	Not Specified
Cask Lid	367	End of Fire	Not Specified
Lid Seal	374	End of Fire	536
Vent & Drain Port Seal	265	1.2 hr after fire	536

NMC
Committed to Nuclear Excellence

Summary of TN-40HT Thermal Analysis

- Buried Cask Boundary Conditions
  - Adiabatic Boundary Conditions
- Determine When Fuel Cladding Reaches Temperature Limits

NMC
Committed to Nuclear Excellence

Summary of TN-40HT Thermal Analysis

Buried Cask

Component	Temperature (°F)	Time (hr)	Limit (°F)
Fuel Cladding	1058	95.75	1058
Inner Shell	804	95.75	Not Specified
Gamma Shell	799	95.75	Not Specified
Radial Resin	300	1.85	300
Outer Shell	791	95.75	Not Specified
Cask Lid	316	95.75	Not Specified
Top Resin	300	85.75	300
Lid Seal	317	95.75	536
Vent & Drain Port Seal	316	95.75	536

NMC
Committed to Nuclear Excellence

Summary of TN-40HT Thermal Analysis

Vacuum Drying

- Assume the Cask is Instantly Drained
- Initial Cask/Pool Temperature, 215 °F
- Ambient Air Temperature, 120 °F
- Determine Time to Reach, 725 °F

NMC
Committed to Nuclear Excellence

Summary of TN-40HT Thermal Analysis

Vacuum Drying

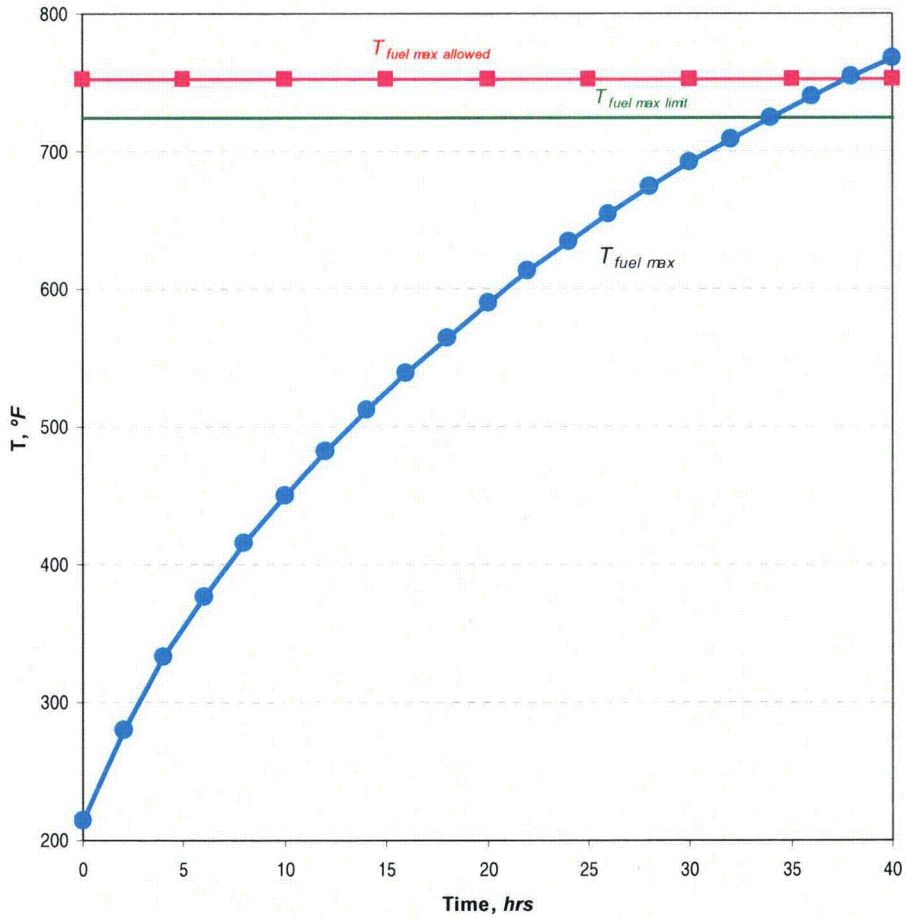

NMC
Committed to Nuclear Excellence

Summary of TN-40HT Thermal Analysis

Cask Internal Pressure

- Average Cavity Gas Temperature From Thermal Models
- Amount of Gases Released From Fuel (& BPRAs) Based on NRC Guidelines
- Ideal Gas Law Used to Determine Final Pressure

NMC
Committed to Nuclear Excellence

Summary of TN-40HT Thermal Analysis

Cask Internal Pressure

Operating Condition	n_{back}	f_B	n_{free}	n_{total}	$\overline{T}_{cavity}$	P_{cavity}	
	(lb-mole)	(---)	(lb-mole)	(lb-mole)	(°F)	(psia)	(psig)
Normal	0.549	0.01	1.017	0.559	456	27.7	13.0
Off-Normal	0.549	0.10	1.017	0.651	456	32.2	17.5
Fire Accident	0.549	1.00	1.017	1.566	592	89.0	74.3
Buried Cask Accident @ 75 hr	0.549	1.00	1.017	1.566	835	109.6	94.9

NMC
Committed to Nuclear Excellence

Summary of TN-40HT Structural Analysis

Cask Body

- ANSYS 3-D Finite Element Analyses
- Individual Load Cases Analyzed Elastically
- Hand Calculation for Local Stresses at Trunnions
- All Combinations Shown to Have a Factor of Safety of at Least 1.5 to the Allowable
- Minimum Factor of Safety for Welds is 4.91.

NMC
Committed to Nuclear Excellence

Summary of TN-40HT Structural Analysis

Normal Condition Load Combinations

Individual Load Combined Load	Bolt Preload	Fabrication	1g Down	Internal Pressure 100 psig	External Pressure 25 psig	Thermal (Hot)	Thermal (Cold)	3g Lifting	Trunnion Local Stress
N1	X	X	X	X					
N2	X	X	X		X				
N3	X	X	X	X		X			
N4	X	X	X		X		X		
N5	X	X		X		X		X	
N6	X	X			X		X	X	
N7				X		X			X
N8					X		X		X

NMC
Committed to Nuclear Excellence

Summary of TN-40HT Structural Analysis

Normal Condition Load Combinations (Nodal)

Load Cmb.	Stress Type	Cask Component Nodal Stress Intensity (ksi)								Allow. (ksi)	Min. FOS
		Inner Shell & Bottom Inner Plate	Shell Flange	Lid Outer Plate	Lid Shield plate	Gamma Shield Shell	Bottom Shield Plate	Top Trunn. Region	Bottom Trunn. Region		
N1	Primary	14.07	11.63	8.68	2.17	8.79	7.96	5.48	8.79	20.5	**1.46**
	Primary+ Secondary	14.07	11.63	8.68	2.17	8.79	7.96	5.48	8.79	61.5	**4.37**
N2	Primary	15.47	12.29	8.22	0.88	6.61	4.37	4.99	6.61	20.5	**1.33**
	Primary+ Secondary	15.47	12.29	8.22	0.88	6.61	4.37	4.99	6.61	61.5	**3.98**
N3	Primary	14.07	11.63	8.68	2.17	8.79	7.96	5.48	8.79	20.5	**1.46**
	Primary+ Secondary	20.58	12.67	8.55	2.47	10.12	20.81	7.54	10.10	61.5	**2.99**
N4	Primary	15.47	12.29	8.22	0.88	6.61	4.37	4.99	6.61	20.5	**1.33**
	Primary+ Secondary	19.44	13.35	7.95	1.05	10.79	15.24	6.74	10.65	61.5	**3.16**
N5	Primary	12.98	11.43	8.69	2.09	9.23	14.52	5.77	9.23	20.5	**1.41**
	Primary+ Secondary	24.51	12.44	8.45	2.31	10.63	27.61	7.28	10.59	61.5	**2.23**
N6	Primary	13.88	12.09	8.22	0.93	7.06	7.89	5.34	7.06	20.5	**1.48**
	Primary+ Secondary	23.09	13.12	7.95	1.07	10.67	21.94	6.47	10.53	61.5	**2.66**

NMC
Committed to Nuclear Excellence

Summary of TN-40HT Structural Analysis

Normal Condition Load Combinations (Linearized)

Load Comb.	Component	Nodal Stress Intensity (ksi)	Linearized Stress Intensity			Allow. (ksi)	Factor of Safety
			Node Nos.	Type	Magnitude (ksi)		
N1	Inner Shell & Bottom Inner Plate	14.07	223-253	P_m	12.83	22.9	**1.78**
				$P_l + P_b$	12.91	34.35	**2.66**
N2	Inner Shell & Bottom Inner Plate	15.47	224-254	P_m	13.17	22.9	**1.74**
				$P_l + P_b$	13.60	34.35	**2.53**
N3	Inner Shell & Bottom Inner Plate	14.07	224-254	P_m	12.64	22.9	**1.81**
				$P_l + P_b$	13.06	34.35	**2.63**
N4	Inner Shell & Bottom Inner Plate	15.47	224-254	P_m	13.17	22.9	**1.74**
				$P_l + P_b$	13.60	34.35	**2.53**
N5	Bottom Shield	14.52	938-1218	P_m	1.98	20.5	**10.35**
				$P_l + P_b$	5.67	30.75	**5.42**
N6	Inner Shell & Bottom Inner Plate	13.53	224-254	P_m	13.12	22.9	**1.75**
				$P_l + P_b$	13.52	34.35	**2.54**

NMC
Committed to Nuclear Excellence

Summary of TN-40HT Structural Analysis

Accident Condition Load Combinations

Individual Load Combined Load	Bolt Preload	Fabrication	18" Bottom End Drop 50 g	Internal Pressure 100 psig	External Pressure 25 psig	Seismic, Tornado, or Flood 1 g-Lateral + 2 g-Down
A1	X	X	X			
A2	X	X	X	X		
A3	X	X	X		X	
A4	X	X		X		X
A5	X	X			X	X

NMC
Committed to Nuclear Excellence

Summary of TN-40HT Structural Analysis

Accident Condition Load Combinations (Nodal)

Load Cmb.	Cask Component Nodal Stress Intensity (ksi)								Allow. (ksi)	Min. FOS
	Inner Shell & Btm. Inner Plate	Shell Flange	Lid Outer Plate	Lid Shield Plate	Gamma Shield Shell	Btm. Shield Plate	Top Trunn. Region	Btm. Trunn. Region		
A1	19.31	13.33	8.31	3.62	5.62	5.25	4.44	5.41	49.0	**2.54**
A2	18.21	12.76	8.43	1.75	5.93	8.97	4.74	5.79	49.0	**2.69**
A3	19.59	13.47	8.28	4.17	5.56	5.05	4.38	5.43	49.0	**2.50**
A4	14.68	11.69	8.73	2.10	8.96	9.81	5.47	8.76	49.0	**3.33**
A5	16.07	12.35	8.24	0.99	6.81	4.72	4.98	6.59	49.0	**3.05**

NMC
Committed to Nuclear Excellence

Summary of TN-40HT Structural Analysis

Basket

- ANSYS 3-D Finite Element Analyses for Normal Conditions
- Modeled a 15" Long Axial Section
- Analyzed 0°, 30°, 45°, 60°,and 90° Azimuth Lateral Loads.
- Hand Calculation for End Drop Accident
- Minimum Required Fusion Welds Tested Capacity (2.9 kips/weld) Includes a Margin of Safety of 1.43

NMC
Committed to Nuclear Excellence

Summary of TN-40HT Structural Analysis

Basket Load Combinations

Normal Condition Load Combination	IL-2 3g Lifting	IL-3 3g Vertical, 3g Lateral	IL-4 Thermal (Hot)	IL-5 Thermal (Cold)
N1	x			
N2	x		x	
N3	x			x
N4		x		
N5		x	x	
N6		x		x

Note:
1. This load case not only bounds the normal and off-normal loads but also bounds the loads due to seismic, tornado, or flood and conservatively compares with normal condition load allowables.

Accident Loading Condition	IL-1 50g Vertical Bottom End Drop
A1	x

NMC
Committed to Nuclear Excellence

Summary of TN-40HT Structural Analysis

Basket Bounding Normal Load Combination

Loading	Component	Load Comb.	Stress Classification	Loads	Stress (ksi)	Allow. Stress (ksi)
3g Vertical, 3g Lateral + Thermal	Fuel Compartment	N5	$P_m + P_b + Q$	Primary plus Secondary	18.40	48.6
	Rails		$P_m + P_b + Q$		25.84	34.13

NMC
Committed to Nuclear Excellence

Summary of TN-40HT Structural Analysis

Basket Accident Load Combination

Drop Orientation	Component	Stress Category	Maximum Stress (ksi)	Allowable Stress (ksi)
End Drop	Fuel Compartments	P_m	6.56	38.88

NMC
Committed to Nuclear Excellence

Summary of TN-40HT Structural Analysis

- Bolts
  - Analyzed per NUREG/CR-6007

NMC
Committed to Nuclear Excellence

Summary of TN-40HT Structural Analysis

Summary of Lid Bolt Stresses

Stress Type	Normal Condition		Accident Condition	
	Stress	Allowable	Stress	Allowable
Average Tensile (ksi)	50.1	93.5	50.1	115.5
Shear (ksi)	13.5	56.1	13.5	69.3
Combined stress intensity (ksi)	57.6	126.3	Not Required	
Interaction E.Q. $R_t^2 + R_s^2 < 1$	0.345	1	0.226	1
Bearing (ksi)	32.2	33.2	Not Required	

NMC
Committed to Nuclear Excellence

Summary of TN-40HT Structural Analysis

Trunnions

- Stresses Due to 6g Compared to Yield Strength
  - Maximum Calculated Stress 22,220 psi
  - Allowable Stress 31,800 psi
- Stresses Due to 10g Compared to Ultimate Strength
  - Maximum Calculated Stress 37,033 psi
  - Allowable Stress 70,000 psi

NMC
Committed to Nuclear Excellence

Summary of TN-40HT Structural Analysis

Fuel Cladding During End Drop

- Transient Dynamic Analyses Using ANSYS
- Elastic-Plastic Material Properties
- Strain Results Compared to Permissible Strains for Irradiated Zircaloy
- Estimate Final Displacement for Criticality Evaluation
- Analysis Being Redone (No Results at This Time)

NMC
Committed to Nuclear Excellence

Summary of TN-40HT Criticality Analysis

- KENO V.a Module of Scale-4.4
- Modeled Slice of Basket
- Basket Material Neutron Absorbers
  - Boral - 75% of 45 mg/cm^2 B10 Loading, or
  - Borated-Aluminum - 90% of 37.5 mg/cm^2 B10 Loading, or
  - Aluminum/B4C Metal Matrix – 90% of 37.5 mg/cm^2 B10 Loading
- 2450 ppm Boron in SFP

NMC
Committed to Nuclear Excellence

Summary of TN-40HT Criticality Analysis

Conservatisms

- Fresh 5.0 w/o Fuel
- No Credit Taken for Gadolinium
- BPRA Modeled as $^{11}B_4C$
- All "Gaps" Replaced With Basket Material

NMC
Committed to Nuclear Excellence

Summary of TN-40HT Criticality Analysis

Sensitivity Studies

- Fuel Type
- Position "Centered" and " Inward"
- Internal Moderator Density
- Thickness of Basket Material
- Rail Structure

NMC
Committed to Nuclear Excellence

Summary of TN-40HT Criticality Analysis

Most Reactive Configuration

- Westinghouse Standard Fuel
- Inward Arrangement
- 100% Internal Moderator Density
- Min Fuel Compartment Tube Internal Width
- Max Fuel Compartment Tube Wall Thickness
- Nominal Absorber Plate Thickness
- Min SS Bar Thickness

NMC
Committed to Nuclear Excellence

Summary of TN-40HT Criticality Analysis

Criticality Results

- Maximum Calculated K_{eff}, 0.9373
- Calculated Dry K_{eff}, 0.5795

Benchmarking of Codes

- 121 Benchmarks Described in NUREG/CR-6361
- Used to Determine Upper Subcritical Limit (USL-1)
- USL-1 Includes 0.05 Δk Administrative Limit
- Minimum USL-1 Value, 0.9419

NMC
Committed to Nuclear Excellence

Summary of TN-40HT Shielding Analysis

- Source Strength Determined Using SAS2H/ORIGEN-S Modules of SCALE
- 44 Group ENDF/B-Z Library
- Dose Rates Calculated by 3-D Monte Carlo Transport Code (MCNP)

NMC
Committed to Nuclear Excellence

Summary of TN-40HT Shielding Analysis

- Design Basis Fuel
  - Westinghouse Standard
  - 3.4 w/o
  - 60 GWD/MTU
  - 18 Years Cooling
  - 0.845 kW (Bounds 0.8 kW Limit)
- Inserts
  - TPD, 125 GWD/MTU Host Burnup, 16 yr Cooling
  - BPRA, 30 GWD/MTU Host Burnup, 18 yr Cooling

NMC
Committed to Nuclear Excellence

Summary of TN-40HT Shielding Analysis

- MCNP Models
  - Discrete Basket
  - Homogenized Fuel Assemblies
  - Explicitly Model Major Cask Components
  - Accident Models do Not Include Neutron Shielding

NMC
Committed to Nuclear Excellence

Summary of TN-40HT Shielding Analysis

MCNP Model

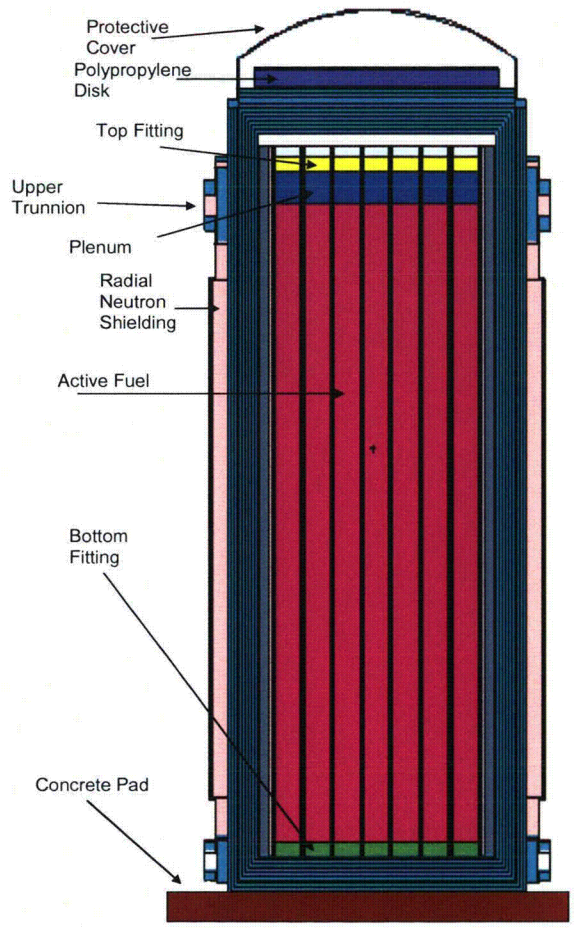

NMC
Committed to Nuclear Excellence

Summary of TN-40HT Shielding Analysis

MCNP Model

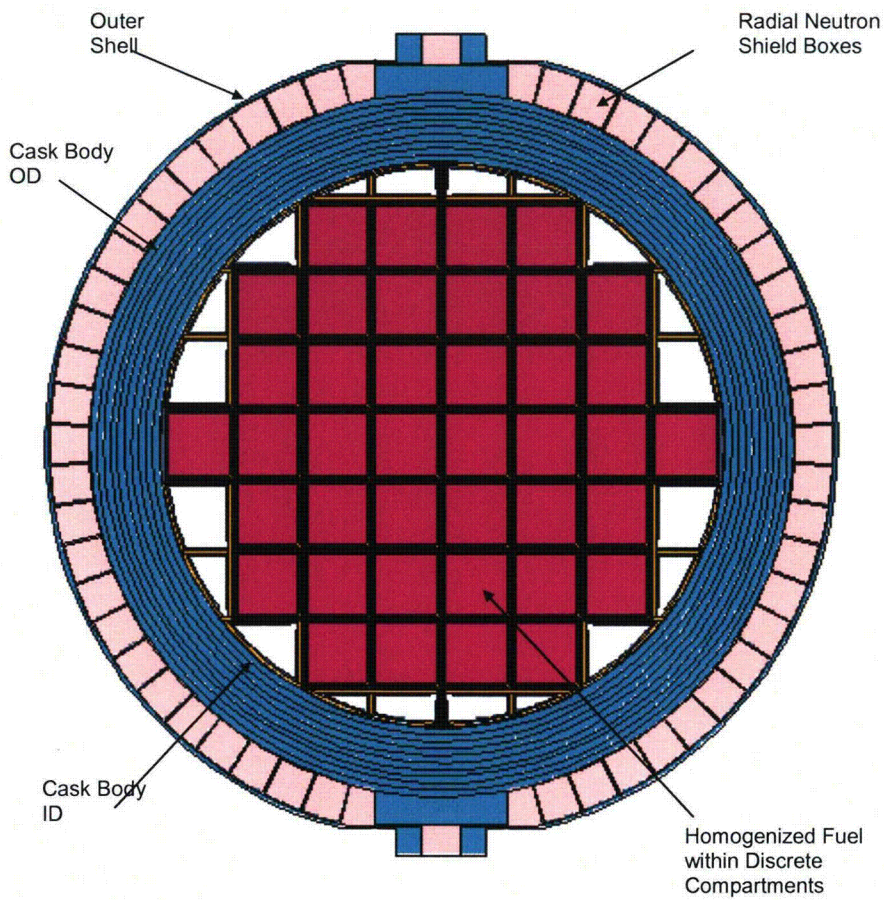

NMC
Committed to Nuclear Excellence

Summary of TN-40HT Shielding Analysis

Summary of Average Dose Rates

	Average Dose Rates (mrem/hr) for Normal and Off-Normal Conditions							
	Side Above Shield	Side Along Shield	Side Below Shield	Top Surface (Protective Cover)	Side Surface	Bottom Surface	1 Meter from Side	2 Meter from Side
Gamma	61.3	32.7	52.9	18.5	35.5	272	12.8	7.61
Neutron	146	28.2	706	7.6	78.7	1515	18.9	10.6
Total	208	60.9	759	26.1	114	1790	31.7	18.2

	Average Dose Rates (mrem/hr) for Accident Conditions							
				Top Surface (Protective Cover)	Side Surface	Bottom Surface	1 Meter from Side	2 Meter from Side
Gamma	-	-	-	63.4	116	-	50.6	31.0
Neutron	-	-	-	135	1980	-	785	444
Total	-	-	-	198	2095	-	835	475

NMC
Committed to Nuclear Excellence

Summary of TN-40HT Shielding Analysis

Side Surface Dose Rates

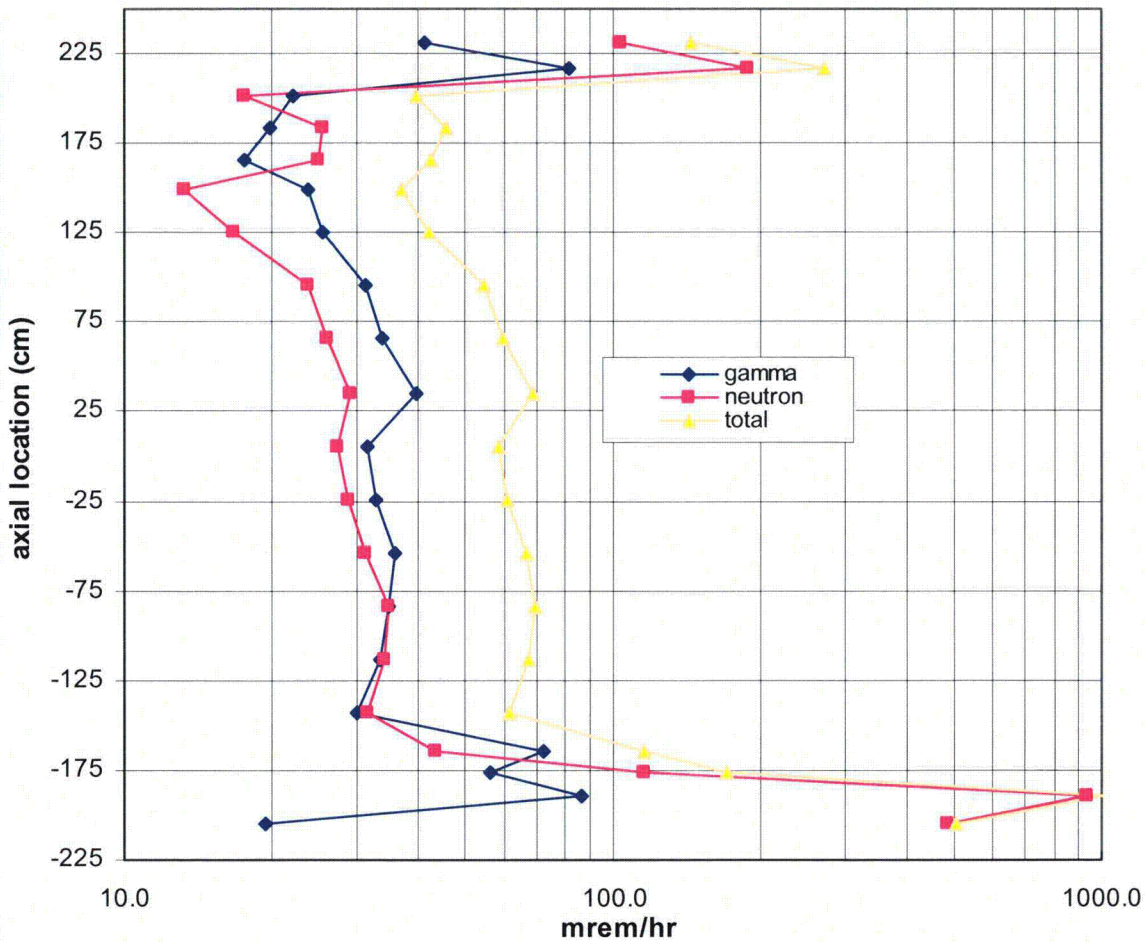

NMC
Committed to Nuclear Excellence

Summary of TN-40HT Shielding Analysis

- Offsite Dose Rates
  - MCNP Array
  - 2X3X12 Array (Total 72 Casks)
  - Each Casks Contains Design-Basis Fuel
  - Includes Skyshine
- Results
  - < 25 mrem/yr to Nearest Real Individual

NMC
Committed to Nuclear Excellence

Project Time Line

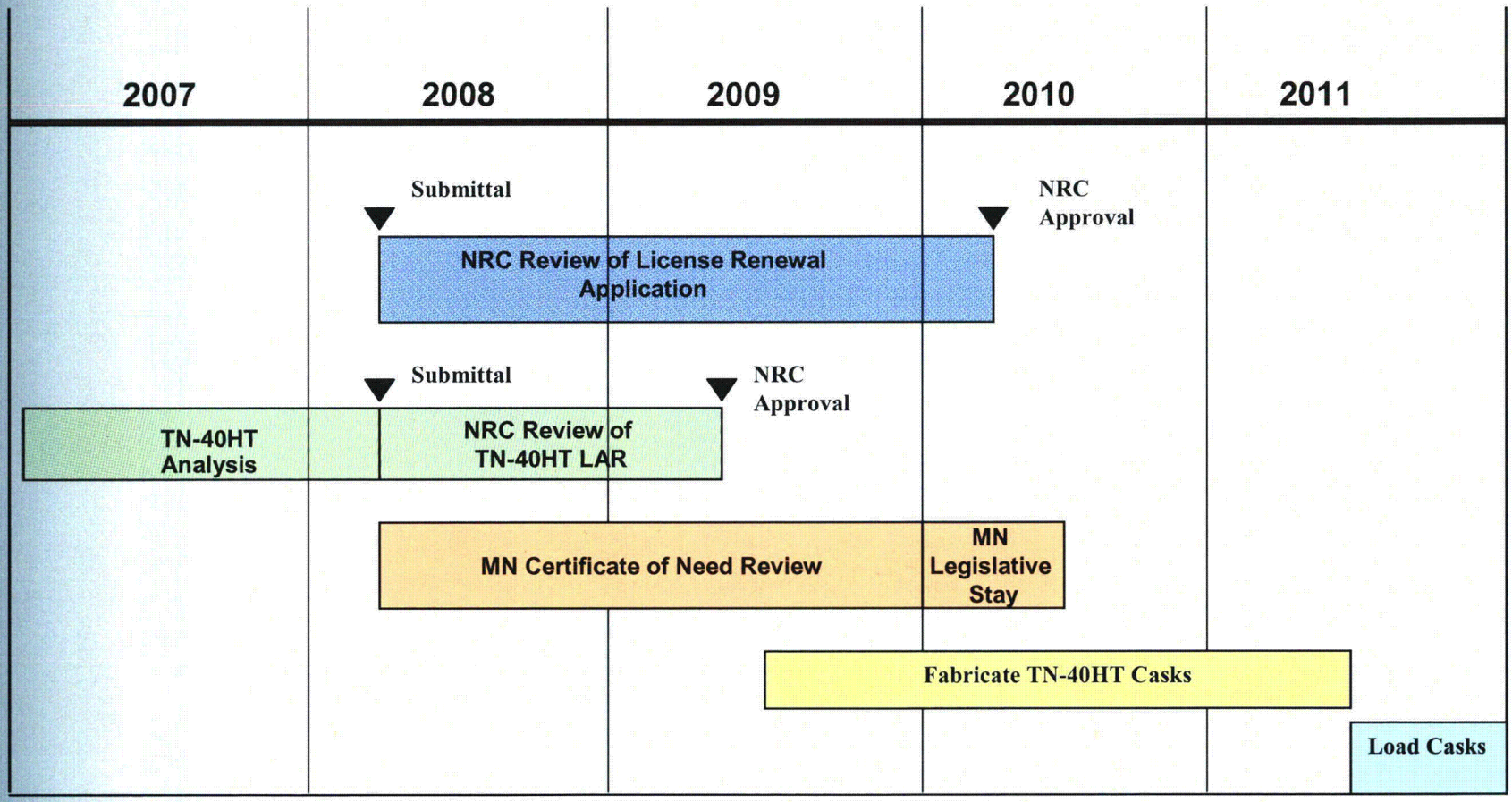

NMC
Committed to Nuclear Excellence

Comments or Questions

?

NMC
Committed to Nuclear Excellence