ATTACHMENT 4

Peach Bottom Atomic Power Station
Units 2 and 3
Docket Nos. 50-277 and 50-278

License Amendment Request
Response to Request for Additional Information

Alternative Source Term (AST)

PBAPS Calculation G-0106-002, Revision 4, *"Control Room Upgrading HVAC Duct Supports"*

NUCLEAR GROUP
M-20599 Rev. 3/93
DOCTYPE 061

CALCULATION COVER SHEET

1. Calculation No. G-0106-002
Page 1

2. ☐ LGS ☒ PBAPS UNIT(S) 2 & 3

3. MOD/NCR/ECR No.:
Other: CALC. TURNOVER TO DS

4. Responsible Branch: SECS

5. Total No. of Pages: 86

6. Last Page No: 84

7. ☐ Safety Related ☐ Non-Safety Related

8. Description: CONTROL ROOM UPGRADING HVAC DUCT SUPPORTS

9. System/Topic No.: 40D
Structure: —
Component: —

RECORD OF REVISIONS

10. Rev. No.	11. Description of Revision	12. Vendor Calc. Number	Rev.	13. Assumptions Yes	No	14. Signatures Preparer	Reviewer	Approver/Date
4	THIS CALCULATION HAS NOT BEEN VALIDATED							"APPROVED FOR RECORD"
	FOR TECHNICAL CONTENT. IT HAS BEEN							FM/MKS-UE 9/17/93
	ADMINISTRATIVELY PROCESSED AND ACCEPTED							
	FOR PIMS INDEXING. SINCE THE CALCULATION							
	MAY OR MAY NOT REFLECT THE CURRENT AS-BUILT							
	CONFIGURATION, THE USER MUST REVIEW THE							
	CALCULATION FOR TECHNICAL ADEQUACY AND THE							
	CURRENT CONFIGURATION NEEDED TO SUPPORT							
	OTHER CALCULATIONS OR DESIGN ACTIVITIES IN							
	PROGRESS.							

15. Related Calc. Numbers							16.
	Provides Info to:						☑ Manual
	Receives Info from:						☐ Computer
	Supersedes:						Computer program and version

CALCULATION COVER SHEET

PROJECT: PBAPS UNITS 2 & 3 JOB NO. 11187-106 DISCIPLINE C/S

SUBJECT: CONTROL ROOM UPGRADING
HVAC DUCT SUPPORTS

FILE NO.

CALC. NO. G-106-2

NO. OF SHEETS 66 84 4

RECORD OF ISSUES								
NO.	DESCRIPTION	BY	DATE	CHKD	DATE	APPRD	DATE	
0	FINAL CALCS	[illegible]	4/7/86	[illegible]	6/27/86	KL	7-1-86	86-0453 7-7-86
1	FINAL, SEE DESCRIPTION BELOW	[illegible]	9/11/86	KL	9/15/86	KL	9-15-86	86-5548 10-2-86
2	FINAL, REVISED SHT. 1	[illegible]	10/09/86	[illegible]	10/9/86	KL	10-9-86	16006598 10-14-86
3	FINAL CALC, ADDED SHT. 50 TO 66	LE	10/23/87	IJP	10/23/87	[illegible]	6/17/88	7-26-88
4	FINAL CALCS PER ERR #P-4727, 4926 & P-5045 ADDED SHT. 67-84	[illegible]	7/28/88	[illegible]	7/28/88	EAE	7/28/88	8-25-88

DESCRIPTION REVISION-1

PAGE No. REV. 0	PAGE No. REV. 1	CONTENT REVISED	REMARKS
44 THRU 57, 63			DELETED
58	44	✓	
59 THRU 62	45 THRU 48	NO	
64	49	NO	

SEE INDIVIDUAL SHEET FOR ORIGINATOR AND CHECKER 4

CALCULATION SHEET

BECHTEL

CALC. NO. G-106-2 REV. NO. 2

ORIGINATOR L. A. [illegible] DATE 4/7/86 CHECKED [illegible] DATE 4/11/86

PROJECT PBAPS UNITS 2 & 3 JOB NO. 11187-106

SUBJECT Control Room Upgrading SHEET NO. 1

HVAC Supports.

(CLASS 1 SEISMIC Q-LISTED)

Rev. 2: [illegible] 10/09/86

ML 10/9/86

REFERENCES:-

1) Design Criteria - Rev. 5

2) Dwg. 6280-M-407, Rev. 7

3) Dwg. 6280-M-419 REV. 4

3) Dwg 6280-S-90, Rev. 7

4) Dwg. 11187-106-M-002, Rev. B.

5) Dwg. 6280-E-1147, Rev. 23.

6) Cold Formed Steel Design Manual (AISI), 1968 Ed.

7) AISC Manual of Steel const., 8th Edition.

2

SEP 20768 Rev. (6/76) ED-69 (5/76)

CALCULATION SHEET

BECHTEL

CALC. NO. G-106-2 REV. NO. 0

ORIGINATOR J. K. M DATE 4.7.86 CHECKED [illegible] DATE 4/11/86

PROJECT PBAPS units 2 & 3 JOB NO. 11187-106

SUBJECT Control Room Upgrading SHEET NO. 2

HVAC supports (Class 1 SEISMIC Q-LISTED)

INTRODUCTION -

Following calculations are performed to design the supports for new HVAC ducts required for the control room upgrading. It is intended to give maximum flexibility to field for erection of new hangers for different duct sizes & location. First, a typical hanger supported by top supporting steel is designed, with a maximum hanger length of 10' feet. Secondly a typical hanger supported from concrete wall is designed.

The hangers are designed to be in the rigid zone of the response spectra curves with a natural frequency of 30 cps or more. Using this criteria, a minimum size for the hanger members is found. Based on various hanger configurations, it is decided to use L3½x3x¼" as the typical member.

CALCULATION SHEET

BECHTEL

CALC. NO. G-106-2 REV. NO. 0

ORIGINATOR S.K.M DATE 4-7-86 CHECKED [illegible] DATE 4/11/86

PROJECT PBAPS units 2 & 3 JOB NO. 11187-106

SUBJECT Control Room Upgrading HVAC supports SHEET NO. 3

Using this hanger member size and maximum length of the member, capacities of the hangers of various configurations are determined. It is found that a k-braced vertical hanger is rigid enough to carry all the intended weight from the duct.

The ducts are assumed to be rigid also between the supports. Maximum allowable weight of duct and supported equipment between the hangers is determined (for various duct sizes used) using rigid frequency requirements and the maximum allowable deflection ($\delta \ngtr \ell/240$). It is found that the maximum allowable weights are much larger than the anticipated weights of ducts & equipment. The stresses in ducts for these weights are also very small.

CALCULATION SHEET

BECHTEL

CALC. NO. G-106-2 REV. NO. 0

ORIGINATOR L.K.M DATE 4-7-86 CHECKED DM DATE 4/11/86

PROJECT PBAPS units 2 & 3 JOB NO. 11187-106

SUBJECT Control Room Upgrading HVAC Supports SHEET NO. 4

One longitudinal bracing is provided for each section of duct and is same as the transverse bracing. The duct is welded to the hanger at the longitudinal brace. The duct and the hangers are also checked for the torsional moment, at the longitudinal brace location, caused by overhanging 8" ⌀ outlets.

The hangers are designed for a maximum spacing of 8'4' with a maximum duct overhang of 2'0'. In order that no appreciable additional load is added from new duct & equipment to the existing hangers, the new duct is also supported at or near the connection with the old duct.

It is decided to use W8x18 members for all new top supporting steel members. The

CALCULATION SHEET

BECHTEL

CALC. NO. G-106-2 REV. NO. 0

ORIGINATOR L. K. [illegible] DATE 4.7.86 CHECKED [illegible] DATE 4/11/86

PROJECT PBAPS Units 2 & 3 JOB NO. 11187-106

SUBJECT Control Room Upgrading HVAC Supports SHEET NO. 5

top supporting steel should be arranged so that the transverse brace or longitudinal brace induce vertical and axial loads only in the W8 members.

It is shown that for actual mass of the duct & hanger, the combined frequencies are in the rigid range.

CALCULATION SHEET

BECHTEL

CALC. NO. G-106-2 REV. NO. 0

ORIGINATOR D.K. [illegible] DATE 4-7-86 CHECKED [illegible] DATE 4/11/86

PROJECT PBAPS UNITS 2 & 3 JOB NO. 11187-106

SUBJECT CONTROL ROOM UPGRADING SHEET NO. 6

HVAC SUPPORTS

1) Assumed weight of duct = 10 lbs/ft

Max. length supported by a duct = 10' (including overhangs)

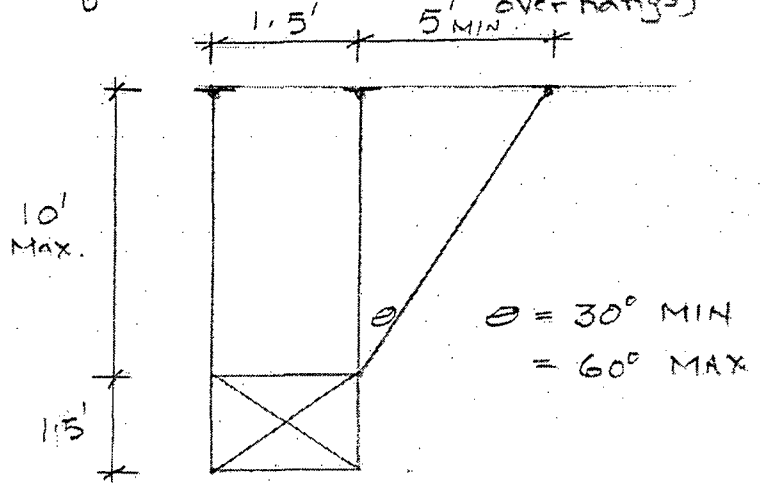

Assume weight of hanger members = 5 lbs/ft

Weight of hanger members at

knee brace $= \left[\frac{1}{2}(10+10+10\sqrt{2}) + 4\times1.5\right]\times5$

$= 115$ lbs.

Weight of duct $= 10\times10 = 100$ lbs.

$\therefore$ Total weight $= 115+100 = 225$ lbs.

Mass of duct $= \frac{225}{32.2} = 6.99$ lb-sec^2/ft

$$f_n = \frac{1}{2\pi}\sqrt{\frac{K}{M}}$$

CALCULATION SHEET

BECHTEL

CALC. NO. G-106-2 REV. NO. 0

ORIGINATOR S. K. M DATE 4.7.86 CHECKED Dvm DATE 4/11/86

PROJECT PBAPS UNITS 2 & 3 JOB NO. 11187-106

SUBJECT Control Room Upgrading HVAC Supports. SHEET NO. 7

For $f_n = 30$ cps,

$M = 6.99$ lb-sec^2/ft

$K = (2\pi \cdot f_n)^2 \times M$

$= (2\pi \times 30)^2 \times 6.99$

$= 248,359$ lbs/ft

$= 20,700$ lbs/in

$K = 20.7$ k/in

CALCULATION SHEET

BECHTEL

CALC. NO. G-106-2 REV. NO. 0

ORIGINATOR J. K. M DATE 4-7-86 CHECKED DJM DATE 4/11/86

PROJECT PBAPS UNITS 2 & 3 JOB NO. 11187-106

SUBJECT Control Room Upgrading HVAC Supports SHEET NO. 8

$$\delta = \sum \frac{S \cdot U \cdot L}{A \cdot E}$$

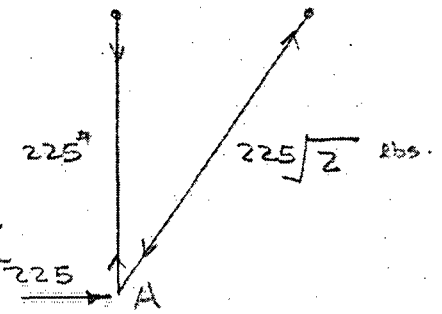

$$= \frac{225 \times 1 \times 120 + 225\sqrt{2} \times \sqrt{2} \times 120\sqrt{2}}{AE}$$

$$\delta = \frac{103{,}368}{A \times 29 \times 10^6}$$

$$\delta = \frac{3.56 \times 10^{-3}}{A} \text{ in}$$

S = Force in member due to 225#

U = Force in Member due to unit load @ A.

L = Length of member

$$\therefore K = \frac{225}{\delta} = \frac{225 \times A}{3.56 \times 10^{-3}} = 63{,}124$$

$$\therefore 63{,}124 \; A = 20{,}700$$

$$A = 0.33 \text{ sq in}$$

Max $\ell/r = 200$ (For pinned members)

$$\therefore r_{min} = \frac{\ell}{200} = \frac{120\sqrt{2}}{200} = 0.8485 \text{ in}$$

CALCULATION SHEET

BECHTEL

CALC. NO. G-106-2 REV. NO. 0

ORIGINATOR S.K.M. DATE 4-7-86 CHECKED Dvan DATE 4/11/86

PROJECT PBAPS units 2 & 3 JOB NO. 11187-106

SUBJECT Control Room Upgrading HVAC supports SHEET NO. 9

This gives us the following choices:-

1)	L 5x5x 5/16	wt. 10.3 lbs/ft	A = 3.03 sq in
	⅃L 3x2½x 3/16	6.77 lbs/ft	1.99 sq in
	TS 2.5x2.5x 3/16	5.59 lbs/ft	1.64 sq in
	TS 4x3x 3/16	8.15 lbs/ft	2.39 sq in
	L 3½x 3x¼	5.4 lbs/ft	1.54 sq in

CALCULATION SHEET

BECHTEL

CALC. NO. S-106-2 REV. NO. 0

ORIGINATOR J. K. [illegible] DATE 4.7.86 CHECKED [illegible] DATE 4/11/86

PROJECT PBAPS units 2 & 3 JOB NO. 11187-106

SUBJECT Control Room Upgrading HVAC Supports SHEET NO. 10

HANGERS AND THEIR CAPACITIES :-

1) KNEE BRACE HANGERS :-

a) $L = 10' = 120''$

Max. Length of diagonal

$$= \frac{10 \times 12}{\sin 30} = 240 \text{ IN.}$$

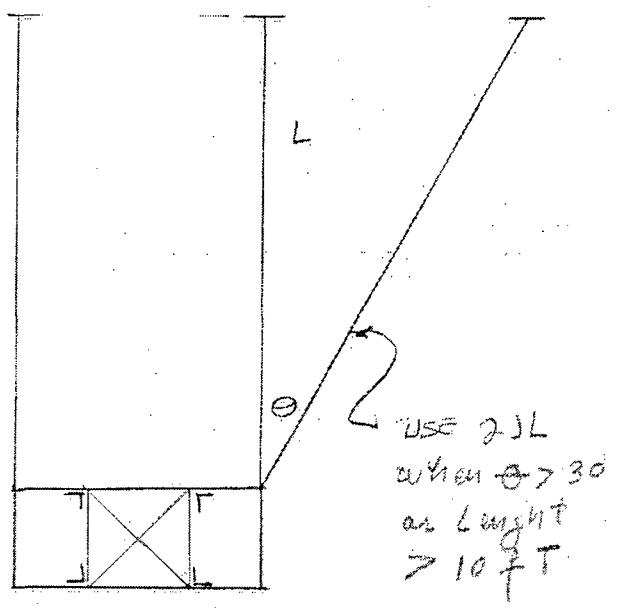

Length of Vertical

$= 120''$.

Minimum r required for Vertical,

$$= \frac{120}{200} = 0.6 \text{ in}$$

Minimum r required for diagonal,

$$= \frac{240}{200} = 1.2 \text{ in.}$$

Hence use L $3\frac{1}{2} \times 3 \times \frac{1}{4}$ for vertical,

JL $3\frac{1}{2} \times 3 \times \frac{1}{4}$ for diagonal.

CALCULATION SHEET

BECHTEL

CALC. NO. G-106-2 REV. NO. 0

ORIGINATOR D. K. [illegible] DATE 4.7.86 CHECKED [illegible] DATE 4/11/86

PROJECT PBAPS units 2 & 3 JOB NO. 11187-106

SUBJECT Control Room Upgrading HVAC Supports SHEET NO. 11

L $3\frac{1}{2} \times 3 \times \frac{1}{4}$ $w = 5.4$ lbs/ft

$A = 1.56$ sq in

$r_{min} = 0.631$ in

⊥L $3\frac{1}{2} \times 3 \times \frac{1}{4}$ $w = 10.8$ lbs/ft

$A = 3.12$ sq in

$r_x = 1.11''$, $r_y = 1.33''$

Hence the angle needs to be braced in x-direction to reduce its unsupported length.

Max angle with this brace :-

length $= 200 \times 1.11 = 222$ in

$\theta = \cos^{-1} \frac{120}{222} = 57.3^\circ$

Hence after $\theta = 30^\circ$, use ⊥L $3\frac{1}{2} \times 3 \times \frac{1}{4}$

CALCULATION SHEET

BECHTEL

CALC. NO. G-106-2 REV. NO. 0

ORIGINATOR D. K. Roy DATE 4.7.86 CHECKED [illegible] DATE 4/11/86

PROJECT PBAPS units 2 & 3 JOB NO. 11187-106

SUBJECT Control Room Upgrading SHEET NO. 12

For a maximum length of 10', assume the max. angle of 45°. A larger angle may be justified for smaller lengths.

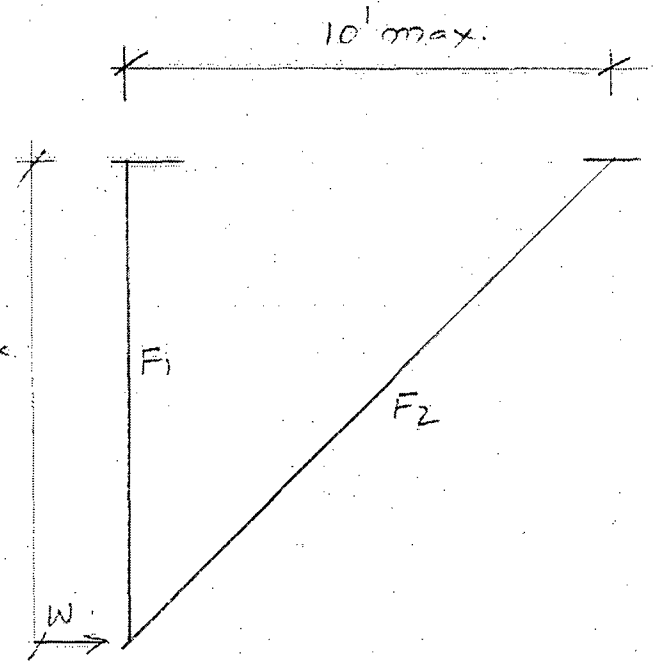

$\therefore F_1 = W$, $u_1 = 1.0$

$F_2 = W\sqrt{2}$, $u_2 = \sqrt{2}$

$l_1 = 120''$, $A_1 = 1.56$ sq in

$l_2 = 120\sqrt{2}$. $A_2 = 3.12$ sq in

$$\therefore \delta = \sum \frac{\varepsilon u L}{AE}$$

$$= \frac{W \times 1 \times 120}{1.56 \times 29 \times 10^6} + \frac{W\sqrt{2} \times \sqrt{2} \times 120\sqrt{2}}{3.12 \times 29 \times 10^6}$$

$$= 6.40 \times 10^{-6}\, W \text{ in.}$$

$$K = \frac{W}{\delta} = 156250 \text{ lbs/in}$$

CALCULATION SHEET

BECHTEL

CALC. NO. G-106-2 REV. NO. 0

ORIGINATOR d.k.m DATE 4.7.86 CHECKED [illegible] DATE 4/11/86

PROJECT PBAPS units 2&3 JOB NO. 11187-106

SUBJECT Control Room upgrading HVAC supports SHEET NO. 13

$$M = \frac{W}{g} = \frac{W}{386.4}$$

$$f_n = 30 \text{ cps.}$$

$$\therefore \quad f_n = \frac{1}{2\pi}\sqrt{\frac{k}{m}}$$

$$30 = \frac{1}{2\pi}\sqrt{\frac{156250}{1} \times \frac{386.4}{W}}$$

$$\therefore W = \frac{1}{900 \times 4 \times \pi^2} \times 156250 \times 386.4$$

$$= 1699 \text{ lbs.}$$

By inspection, the weights of duct, hanger and equipment supported by the hanger are less than this and hence the hanger is O.K.

CALCULATION SHEET

BECHTEL

CALC. NO. G-106-2 REV. NO. 0

ORIGINATOR J.K.M. DATE 4-7-86 CHECKED [illegible] DATE 4/11/86

PROJECT PBAPS Units 2&3 JOB NO. 11187-106

SUBJECT Control Room Upgrading HVAC supports SHEET NO. 14

b) $L = 60''$

Length of diagonal, $= 60/\sin 30 = 120''$.

$\therefore$ min required $= \frac{120}{200} = 0.6$

use $L\ 3\frac{1}{2} \times 3 \times \frac{1}{4}''$

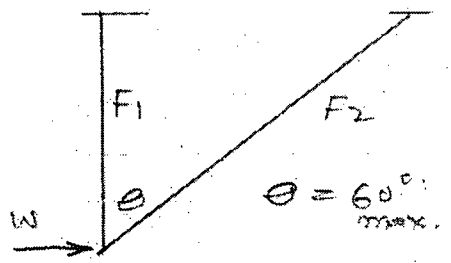

Using $l_1 = 60$, $l_2 = 120$

$F_1 = W/\tan 60 = .58\,W$

$F_2 = W/\sin 60 = 1.15W$

$u_1 = 0.5$, $u_2 = 2$.

$$\therefore \delta = \frac{0.58W \times 0.58 \times 60 + 1.15W \times 1.15 \times 120}{1.56 \times 29 \times 10^6}$$

$$= 4.0 \times 10^{-6}\,W \text{ in}$$

$$K = \frac{W}{\delta} = 252{,}900 \text{ lbs/in.}$$

$$W_{all} = \frac{252{,}900 \times 386.4}{30^2 \times (2\pi)^2} = 2790 \text{ lbs.}$$

CALCULATION SHEET

BECHTEL

CALC. NO. G-106-2 REV. NO. 0

ORIGINATOR A.K. [illegible] DATE 9-7-86 CHECKED [illegible] DATE 9/11/86

PROJECT PBAPS units 2&3 JOB NO. 11187-106

SUBJECT control Room upgrading HVAC supports SHEET NO. 15

c) $L = 7' = 84''$

Length of knee brace $= 84\sqrt{2} = 119$ in.

use $L\ 3\frac{1}{2} \times 3 \times \frac{1}{4}$

$\ell_1 = 84, \quad \ell_2 = 119''$

$F_1 = W, \quad F_2 = \sqrt{2}\,W$

$u_1 = 1 \quad u_2 = \sqrt{2}.$

$A_1 = A_2 = 1.56$ sq in

$$\therefore \delta = \frac{W \times 1 \times 84 + \sqrt{2}W \times \sqrt{2} \times 119}{1.56 \times 29 \times 10^6}$$

$$= 7.117\,W \times 10^{-6}$$

$$k = \frac{W}{\delta} = 140{,}497 \text{ lbs/in}$$

$$W_{all} = \frac{140{,}497 \times 386.4}{(2 \times \pi \times 30)^2} = 1528 \text{ lbs.}$$

CALCULATION SHEET

BECHTEL

CALC. NO. G-106-2 REV. NO. 0

ORIGINATOR J. K. [illegible] DATE 4.7.86 CHECKED [illegible] DATE 4/11/86

PROJECT PBAPS UNITS 2 & 3 JOB NO. 11187-106

SUBJECT Control Room Upgrading HVAC Supports SHEET NO. 16

3) HANGERS WITH INTERNAL K- BRACING.

$L = 120''$

$l_1 = 60''$

$l_2 = 60\sqrt{2}$

$F_1 = W$

$F_2 = W\sqrt{2}$

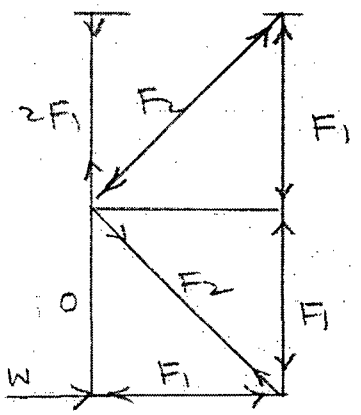

$u_1 = 1, \quad u_2 = \sqrt{2}, \quad A_1 = A_2 = 1.56 \text{ sq in}$

$$\delta = \sum \frac{SuL}{AE}$$

$$= \frac{W \times 1 \times 60 \times 3 + W\sqrt{2} \times \sqrt{2} \times 60\sqrt{2} \times 2 + 2W \times 2 \times 60}{1.56 \times 29 \times 10^6}$$

$$= 16.77 \times 10^{-6} W$$

$$k = \frac{W}{\delta} = 59{,}637 \text{ lbs/in}$$

$$W_{all} = \frac{59{,}637 \times 38.14}{(2 \times 30 \times \pi)^2} = 648 \text{ lbs}$$

CALCULATION SHEET

BECHTEL

CALC. NO. G-106-2 REV. NO. 0

ORIGINATOR L.K. [illegible] DATE 4.7.86 CHECKED [illegible] DATE 4/11/86

PROJECT PBAPS UNITS 2 & 3 JOB NO. 11187-106

SUBJECT Control Room Upgrading HVAC Supports SHEET NO. 17

CONCLUSION -

It appears that all hangers with kl/r for its members 200 or less are capable of supporting the ducts.

Limit $l_{max} = 10'$

hanger spacing = 8' max.

CALCULATION SHEET

BECHTEL

CALC. NO. G-106-2 REV. NO. 0

ORIGINATOR D. K. [illegible] DATE 4-7-86 CHECKED [illegible] DATE 4/11/86

PROJECT PBAPS units 2 & 3 JOB NO. 11187-106

SUBJECT Control Room Upgrading HVAC Ducts SHEET NO. 18

WALL SUPPORTED HANGERS

It is assumed that max. overhang from the wall is 5'.

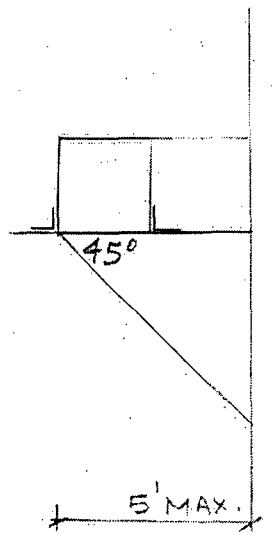

Max. length of diagonal,

$= 60\sqrt{2} = 85''$

Min. r req'd $= \frac{85}{200} = 0.0425''$

Hence Min size of angle is $L\ 2\frac{1}{2} \times 2\frac{1}{2} \times \frac{3}{16}$

$r = 0.495$ in

$A = 0.902$ sq in

wt = 3.07 lbs/ft

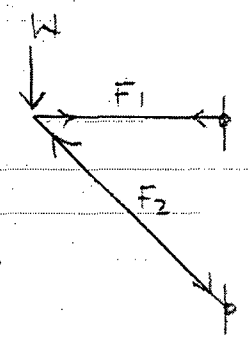

$F_1 = W$, $u_1 = 1$, $l_1 = 60''$

$F_2 = W\sqrt{2}$, $u_2 = \sqrt{2}$, $l_2 = 60\sqrt{2}$

CALCULATION SHEET

BECHTEL

CALC. NO. S-106-3 REV. NO. 0

ORIGINATOR X.K.M DATE 4.7.86 CHECKED [illegible] DATE 4/11/86

PROJECT PBAPS units 2 & 3 JOB NO. 11187-106

SUBJECT control Room upgrading: HVAC supports SHEET NO. 19

$$\therefore \delta = \sum \frac{S.u.l}{AE}$$

$$= \frac{W \times 1 \times 60 + W\sqrt{2} \times \sqrt{2} \times 60\sqrt{2}}{0.902 \times 29 \times 10^6}$$

$$= 8.78 \times 10^{-6}\ W$$

$$K = \frac{W}{\delta} = 113,895 \text{ lbs/in}$$

$\therefore$ Allowable weight on hanger

$$W_{all} = \frac{K.g}{(2\pi f_n)^2}$$

$$= \frac{113,895 \times 386.4}{(2 \times \pi \times 30)^2}$$

$$= 1239 \text{ lbs.}$$

CALCULATION SHEET

BECHTEL

CALC. NO. G-106-2 REV. NO. 0

ORIGINATOR L. K. [illegible] DATE 4.7.86 CHECKED [illegible] DATE 4/11/86

PROJECT PBAPS units 2 & 3 JOB NO. 11187-106

SUBJECT SHEET NO. 20

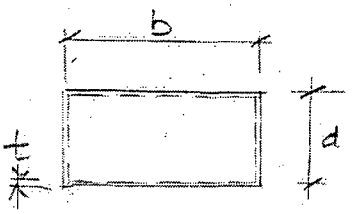

PROPERTIES OF DUCTS (GAGE 20)

A. RECTANGULAR DUCTS $t = .0359''$

DUCT SIZE b×d	$I_x = \frac{td^2}{6}(3b+d)$ IN^4	$S_x = \frac{td}{3}(3b+d)$ IN^3	$I_Y = \frac{tb^2}{6}(3d+b)$ IN^4	$S_Y = \frac{tb}{3}(b+3d)$ IN^3	$R = \frac{2tb^2d^2}{b+d}$ IN^4	$w = 2t\frac{(b+d)}{12}40$ lbs/ft
18×12	56.86	9.48	104.68	11.63	111.66	7.18
18×9	30.53	6.785	87.24	9.69	69.79	6.46
12×12	41.36	6.89	41.36	6.89	62.04	5.74
12×9	21.81	4.85	33.60	5.60	39.88	5.03
8×8	12.25	3.06	12.25	3.06	18.38	3.83
9×6	7.11	2.37	13.08	2.91	13.96	3.59
8×5	4.34	1.74	8.81	2.20	8.84	3.11
6×5	3.44	1.38	4.52	1.51	5.67	2.63

CALCULATION SHEET

BECHTEL

CALC. NO. G-1067-2 REV. NO. 0

ORIGINATOR D.K.M DATE 4.7.86 CHECKED [illegible] DATE 4/11/86

PROJECT PBAPS units 2 & 3 JOB NO. 11187-106

SUBJECT Control Room Upgrading HVAC Ducts SHEET NO. 21

B. ROUND DUCTS. $t = .0359''$

$r = d/2$

d (DIA.) IN.	I $t \cdot \pi \cdot r^3$ IN^4	S $t \cdot \pi \cdot r^2$ IN^3	R $2 t \pi r^3$ IN^4	w $\pi \cdot \frac{d}{12} \cdot t \times 40$ lbs/ft
14	38.68	5.53	77.36	5.37
12	24.36	4.06	48.72	4.61
8	7.22	1.80	14.44	3.00

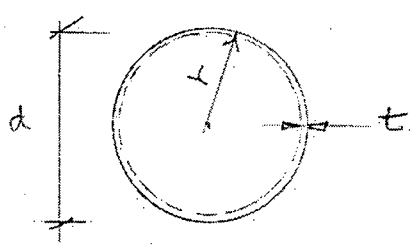

CALCULATION SHEET

BECHTEL

CALC. NO. G-106-2 REV. NO. 0

ORIGINATOR L.K. Roy DATE 4.7.86 CHECKED [illegible] DATE 4/11/86

PROJECT PBAPS units 2 & 3 JOB NO. 11187-106

SUBJECT Control Room Upgrading HVAC Ducts SHEET NO. 22

MAXIMUM ALLOWABLE LOAD -

I) RIGID FREQUENCY CRITERIA -

$$f_n = \frac{1}{2\pi}\sqrt{\frac{K}{M}}$$

$$f_n = \frac{1}{2\pi}\sqrt{\frac{K}{W/g}} = \frac{1}{2\pi}\sqrt{\frac{g}{W/K}} = \frac{1}{2\pi}\sqrt{\frac{g}{\Delta}}$$

$$\therefore \quad \Delta = \frac{g}{(2\pi f_n)^2} = \frac{386.4}{(2\pi \times 30)^2}$$

$= .011''$ required maximum deflection for rigid body motion of duct

II) Maximum allowable deflection.

$$= \frac{l}{240} = \frac{100}{240} = 0.4167 \text{ in} > .011 \text{ in}$$

$\therefore$ use $\Delta = .011$ IN.

$$\therefore \quad \frac{5}{384}\frac{Wl^3}{EI} = .011 \text{ IN}$$

$$W = .011 \times \frac{384}{5} \times \frac{EI}{l^3}$$

CALCULATION SHEET

BECHTEL

CALC. NO. G-106-2 REV. NO. 0

ORIGINATOR D. K. [illegible] DATE 4.7.86 CHECKED [illegible] DATE 4/11/86

PROJECT PBAPS units 2 & 3 JOB NO. 11187-106

SUBJECT Control Room Upgrading HVAC Ducts SHEET NO. 23

$$\therefore W = .011 \times \frac{384}{5} \times \frac{29 \times 10^6}{(100)^3} I$$

$$W = 24.5\, I \quad \text{(Total weight of duct)}$$

Hence the weights of the duct which can be supported by the duct (based on smaller I value) are as follows:

DUCT SIZE	I USED	W ALLOWED LBS	DUCT SIZE	I USED	W ALLOWED LBS
18x12	56.86	1393	8x5	4.34	106
18x9	30.53	748	6x5	3.44	84
12x12	41.36	1013	14" Φ	38.68	947
12x9	21.81	534	12" Φ	24.36	597
8x8	12.25	300	8" Φ	7.22	177
9x6	7.11	174			

The actual weight of even a 10 ft. long section of duct is smaller than corresponding weight above, Hence ducts behave as rigid between supports.

CALCULATION SHEET

BECHTEL

CALC. NO. G-106-2 REV. NO. 0

ORIGINATOR K.K.M. DATE 4.7.86 CHECKED [illegible] DATE 4/11/86

PROJECT PBAPS Units 2 & 3 JOB NO. 11187-106

SUBJECT control Room Upgrading HVAC Ducts supports SHEET NO. 24

MOMENTS AND STRESSES:-

From response spectra charts, for rigid body motion, the maximum acceleration for ½% damping is 0.2g for OBE.

$\therefore \alpha_h = 0.2g$ OBE

$\alpha'_h = 2.4 \times 0.2g = 0.48g$ SSE

For vertical accelerations,

$\alpha_v = \frac{2}{3} \times 0.2g = 0.13g$ OBE

$\alpha'_v = \frac{2}{3} \times 0.48g = 0.32g$ SSE.

Conservatively, the weight of duct would be doubled to account for zinc coating, insulation etc. A 10' section of duct would be assumed contributing to the weight.

CALCULATION SHEET

BECHTEL

CALC. NO. S-106-2 REV. NO. 0

ORIGINATOR S. K. [illegible] DATE 4.7.86 CHECKED [illegible] DATE 4/11/86

PROJECT PBAPS Units 2 & 3 JOB NO. 11187-106

SUBJECT Control Room Upgrading HVAC Supports SHEET NO. 25

If W is the weight of duct used,

$$M = \frac{WL}{8} = \frac{100}{8} \times W = 12.5W$$

S_x & S_y Section Modulii

Then for OBE,

$$f_{1x} = \frac{12.5W \times 0.2}{S_x} = \frac{2.5W}{S_x}$$

$$f_{2y} = \frac{12.5W \times (1+.13)}{S_y} = \frac{14.125W}{S_y}$$

$$\therefore f_{xy_{max}} = f_1 + f_2 = \left(\frac{2.5}{S_x} + \frac{14.125}{S_y}\right)W$$

For duct orientation changed,

$$f_{1y} = \frac{12.5W \times 0.2}{S_y} = \frac{2.5W}{S_y}$$

$$f_{2x} = \frac{12.5W(1+.13)}{S_x} = \frac{14.125W}{S_x}$$

$$f_{yx_{max}} = f_1 + f_2 = \left(\frac{2.5}{S_y} + \frac{14.125}{S_x}\right)W$$

For round ducts

$$f_{xy_{max}} = f_{yx\ max.}$$

CALCULATION SHEET

BECHTEL

CALC. NO. G-106-2 REV. NO. 0

ORIGINATOR J.K.M DATE 4.7.86 CHECKED [illegible] DATE 4/11/86

PROJECT PBAPS units 2&3 JOB NO. 11187-106

SUBJECT Control Room Upgrading HVAC Duct Supports SHEET NO. 26

For SSE,

$$f'_{1x} = \frac{12.5W \times 0.48}{S_x} = \frac{6.0W}{S_x}$$

$$f'_{1Y} = \frac{12.5W \times (1+0.32)}{S_Y} = \frac{16.5W}{S_Y}$$

$$f'_{xYmax} = f'_{1x} + f'_{2Y} = \left(\frac{6.0}{S_x} + \frac{16.5}{S_Y}\right)W$$

For duct orientation changed,

$$f'_{1Y} = \frac{12.5W \times 0.48}{S_Y} = \frac{6W}{S_Y}$$

$$f'_{2x} = \frac{12.5W \times (1+0.32)}{S_x} = \frac{16.5W}{S_x}$$

$$\therefore f_{Yx_{max}} = f'_{1Y} + f'_{2x} = \left(\frac{6.0}{S_Y} + \frac{16.5}{S_x}\right)W$$

For round ducts, $f'_{xYmax} = f'_{YXmax}$

CALCULATION SHEET

BECHTEL

CALC. NO. G-106-2 REV. NO. 0

ORIGINATOR L.K.M DATE 4-7-86 CHECKED [illegible] DATE 4/11/86

PROJECT PBAPS units 2&3 JOB NO. 11187-106

SUBJECT Control Room Upgrading HVAC Duct Supports SHEET NO. 27

DUCT DATA				OBE		SSE	
SIZE	W lbs.	S_x IN^3	S_y IN^3	$f_{xy_{max}}$ PSI	$f_{yx_{max}}$ PSI	$f'_{xy_{max}}$ PSI	$f'_{yx_{max}}$ PSI
18x12	150	9.48	11.63	222	256	308	338
18x9	130	6.79	9.69	237	304	336	396
12x12	115	6.89	6.89	277	277	376	376
12x9	100	4.85	5.60	304	336	418	418
8x8	80	3.06	3.06	435	435	588	588
9x6	72	2.37	2.91	425	491	591	591
8x5	62	1.74	2.20	487	574	679	757
6x5	52	1.38	1.51	581	618	794	828
14"φ	105	5.53	5.53	316	316	427	427
12"φ	90	4.06	4.06	369	369	499	499
8"φ	60	1.80	1.80	554	554	750	750

It is noted that all the stresses are very small.

CALCULATION SHEET

BECHTEL

CALC. NO. G-106-2 REV. NO. 0

ORIGINATOR L.K.M. DATE 4.7.86 CHECKED [illegible] DATE 4/11/86

PROJECT PBAPS units 2&3 JOB NO. 11187-106

SUBJECT Control Room Upgrading SHEET NO. 28

HVAC Hangers.

ACTUAL FREQUECIES –

1) SUPPORT –

The 30 cps is based upon an area of member

A = 0.33 sq in

Actual Area = 1.56 sq in.

∴ Actual frequency of the support,

$$f_n = \sqrt{\frac{1.56}{0.33}} \times 30 = 65 \text{ cps.} \quad \text{O.K.}$$

II) DUCT –

For worst case,

Allowed weight = 84 lbs.

Actual weight = 52 cps.

$$\text{frequency} = \sqrt{\frac{84}{52}} \times 30 = 38 \text{ cps.}$$

Using 65 cps for supports,

Actual frequency,

$$f_n = \frac{1}{\sqrt{\left(\frac{1}{65}\right)^2 + \left(\frac{1}{38}\right)^2}} = 33 \text{ cps} \quad \underline{\text{O.K.}}$$

CALCULATION SHEET

BECHTEL

CALC. NO. S-106-2 REV. NO. 0

ORIGINATOR J. K. M DATE 4-7-86 CHECKED [illegible] DATE 4/11/86

PROJECT PBAPS Units 2 & 3 JOB NO. 11187-106

SUBJECT Control Room Upgrading SHEET NO. 29

CHECK 14"Φ DUCT FOR TORSION FROM WEIGHT OF 8"Φ DUCTS & FLEXIBLE HOSES -

Each duct piece is approximately 13' long and has 8 - 8"Φ outlets.

Estimate weight of each 8"Φ duct + flexible hose = 50 lbs.

Leverage = 3'6" max ≈ 42".

∴ Torsion at each outlet = 50 x 42 = 2100 in lb.

Total Torsion for 12"Φ duct = 2100 x 4 = 8400 in lb

Total Torsion for 14"Φ duct = 2100 x 8 = 16,800 in lb

For 12"Φ DUCT. -

$$\tau = \text{shear stress} = \frac{16 T d_2}{\pi (d_2^4 - d_1^4)}$$

T = 8400 in lbs.

d_1 = 12"

d_2 = 12 + .0359 = 12.0359 in.

∴ τ = 2060 psi.

CALCULATION SHEET

BECHTEL

CALC. NO. G-106-2 REV. NO. 0

ORIGINATOR A.K.M DATE 4.7.86 CHECKED [illegible] DATE 4/11/86

PROJECT PBAPS units 2 & 3 JOB NO. 11187-106

SUBJECT Control Room Upgrading HVAC supports SHEET NO. 30

For 14"Φ duct,

$T = 16,800$ lb/ft

$d_1 = 14"$

$d_2 = 14.0359"$

$\therefore \tau = 3028$ psi.

For OBE, $\alpha_h = 0.13g$

SSE $\alpha_h = 0.32g$.

$\therefore$ Max. stresses

12" Φ Duct OBE, $\tau = (1+.13) \times 2060 = 2328$ psi

SSE, $\tau' = (1+.32) \times 2060 = 2719$ psi

14" Φ DUCT, OBE $\tau = (1+.13) \times 3028 = 3422$ psi

SSE $\tau' = (1+.32) \times 3028 = 3997$ psi.

CALCULATION SHEET

BECHTEL

CALC. NO. Cr-106-2 REV. NO. 0

ORIGINATOR X-K-M DATE 4-7-86 CHECKED DWM DATE 4/11/86

PROJECT PBAPS Units 2&3 JOB NO. 11187-106

SUBJECT Control Room Upgrading HVAC Supports SHEET NO. 31

Max. Allowable Shear stress.

OBE $F_v = 1/4 \times 33{,}000 = 13{,}200$ psi > 3422 psi O.K.

SSE $F_v' = 0.5 \times 33{,}000 = 16{,}500$ psi > 3497 psi O.K.

As such, the duct is capable of taking the torsion imposed by 8" φ outlet ducts & flexible hoses. The bending stresses in the ducts are small from vertical & horizontal seismic loads, as such the ducts are O.K.

The advantages of using Gage 20 duct are as followings

- Precluding the buckling problem at the supports
- Providing sufficient thickness for the welding of lugs at the supports to resist torsional moment due to the gravity load of the branches of ducts which would otherwise need gravity supports.

CALCULATION SHEET

BECHTEL

CALC. NO. G-106-2 REV. NO. 0

ORIGINATOR A. K. M. DATE 4.7.86 CHECKED [illegible] DATE 4/11/86

PROJECT PBAPS Units 2 & 3 JOB NO. 11187-106

SUBJECT Control Room Upgrading HVAC Duct Supports SHEET NO. 32

CHECK HANGER FOR TORSONAL LOADING -

1) TOP SUPPORTED HANGER

Maximum Torsion

= 16,800 in lbs.

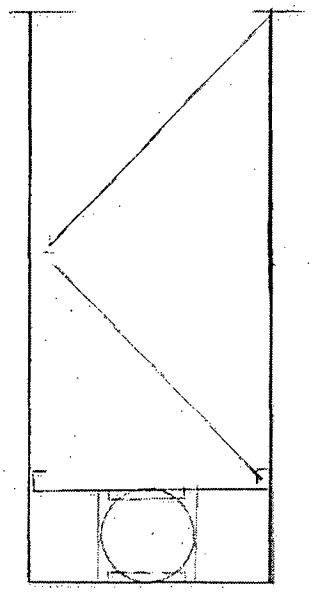

Assume the duct is welded to top & bottom angles,

∴ Force in top & bottom angles from torsion,

$= \frac{16800}{14} = 1200$ lbs.

The horizontal angles are capable of taking this force plus any other lateral load in compression by inspection.

Max. Bending Moment in Vertical angles,

$= 1200 \times 14 = 16,800$ in lbs.

CALCULATION SHEET

BECHTEL

CALC. NO. G-106-2 REV. NO. 0

ORIGINATOR S. K. M. DATE 4.7.86 CHECKED [illegible] DATE 4/11/86

PROJECT PBAPS Units 2 & 3 JOB NO. 11187-106

SUBJECT Control Room Upgrading HVAC Supports SHEET NO. 33

moment per angle = $\frac{16,800}{2}$ = 8400 in lbs

For L 3½ x 3 x ¼, S_{min} = .589 in^3

$\therefore f_b = \frac{8400}{.589} = 14,261$ psi

For OBE, $f_b = 14,261 (1 + .13) = 16,115$ psi

SSE $f'_b = 14,261 (1 + .32) = 18,824$ psi.

VERTICAL LOAD -

Vertical load supported by 14" ⌀ duct hanger,

= 105 lbs + weight of 2 8" ⌀ duct outlets

= 105 + 2 x 50 = 205 lbs.

∴ Load per vertical angle,

= $\frac{205}{2}$ = 103 lbs.

∴ Stress per angle, = $\frac{103}{1.5}$ A = 1.56 sq in

f_a = 66 psi

For OBE, $f_a = 66 \times (1 + .13) = 75$ psi

SSE $f'_a = 66 (1 + .32) = 87$ psi

CALCULATION SHEET

BECHTEL

CALC. NO. G-106-2 REV. NO. 0

ORIGINATOR d.k.m DATE 4.7.86 CHECKED [illegible] DATE 4/11/86

PROJECT PBAPS Units 2 & 3 JOB NO. 11187-106

SUBJECT Control Room Upgrading SHEET NO. 34

HVAC Supports

LONGITUDINAL LOAD -

Load supported for longitudinal loading,

= weight of 14"Φ duct + weight of 12"Φ duct

+ weight of 8 - 8"Φ duct outlets

= 105 + 90 + 8 × 50

= 595 lbs.

LONGITUDINAL FORCE,

OBE $F_L = 595 \times 0.2 = 119$ lbs.

SSE $F'_L = 595 \times .48 = 286$ lbs.

Force in bottom angle,

OBE, $F_{BL} \frac{119}{2} = 60$ lbs.

$F'_{BL} = \frac{286}{2} = 143$ lbs.

∴ Moment per vertical angle,

OBE $M = \frac{60 \times 14}{2} = 420$ in lbs

SSE $M' = \frac{143 \times 14}{2} = 1001$ in lbs.

CALCULATION SHEET

BECHTEL

CALC. NO. G-106-2 REV. NO. 0

ORIGINATOR A.K.M DATE 4.7.86 CHECKED Dawn DATE 4/11/86

PROJECT PBAPS units 2&3 JOB NO. 11187-101

SUBJECT Control Room Upgrading SHEET NO. 35

$S = .776 \text{ in}^3$

$\therefore f_b = \frac{420}{.776} = 541 \text{ psi}$

$f'_b = \frac{1001}{.776} = 1290 \text{ psi}$

∴ Maximum stress

OBE, $f_{max} = 16,115 + 75 + 541 = 16,731 \text{ psi}$

$< .6 \times 36000 \text{ psi}$

O.K.

SSE $f'_{max} = 18,824 + 87 + 1290 = 19420 \text{ psi}$

$< .9 \times 36,000 \text{ psi}$

O.K.

CALCULATION SHEET

BECHTEL

CALC. NO. S-106-2 REV. NO. 0

ORIGINATOR A. K. [illegible] DATE 4.7.86 CHECKED [illegible] DATE 4/11/86

PROJECT PBAPS Units 2 & 3 JOB NO. 11187-106

SUBJECT Control Room Upgrading HVAC Supports SHEET NO. 36

11) CONCRETE SUPPORT HANGER –

Torsion Moment, = 16800 in lbs.

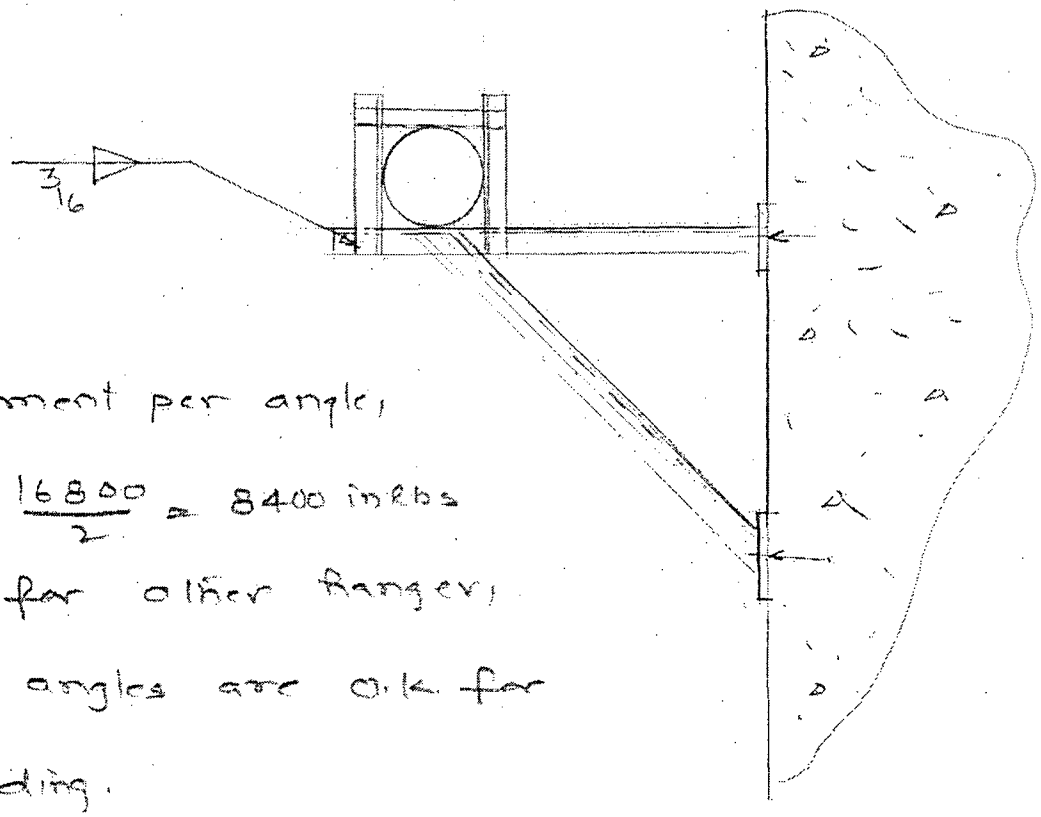

Moment per angle,

$= \frac{16800}{2} = 8400$ in lbs

As for other hanger, the angles are o.k. for bending.

Check welding :–

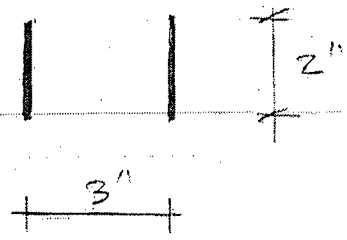

Moment from torsion,

$M = 8400$ in lbs

For OBE, $M = 8400 \times (1 + .13) = 9492$ in lbs

SSE $M_1' = 8400(1 + .32) = 11{,}088$ in lbs.

CALCULATION SHEET

BECHTEL

CALC. NO. S-106-2 REV. NO. 0

ORIGINATOR X.K.M DATE 4.7.86 CHECKED [illegible] DATE 4/11/86

PROJECT PBAPS units 2 & 3 JOB NO. 11187-106

SUBJECT Control Room Upgrading HVAC supports SHEET NO. 37

Force from Longitudinal Seismic;

OBE $F_L = \frac{119}{2} \times \frac{1}{2} = 30$ lbs per angle

SSE $F'_L = \frac{286}{2} \times \frac{1}{2} = 72$ lbs per angle.

For Transverse Seismic,

Duct weight supported = 205 lbs.

∴ For OBE, $F_T = \frac{205 \times 0.2}{2} = 21$ lbs | angle.

SSE $F'_T = \frac{205 \times .48}{2} = 49$ lbs | angle

The force in the welds from direct tension & shear is not too much and is not included in the calculations.

CALCULATION SHEET

BECHTEL

CALC. NO. S-106-2 REV. NO. 0

ORIGINATOR d.k.m DATE 4.7.86 CHECKED [illegible] DATE 4/11/86

PROJECT PBAPS units 2 & 3 JOB NO. 11187-106

SUBJECT Control Room Upgrading HVAC Supports SHEET NO. 38

Moment from longitudinal seismic,

OBE $M_2 = 420$ in lbs

SSE $M_2' = 1001$ in lbs.

HORIZONTAL SHEAR, $= 1200$ lbs. (From Torsion)

OBE $V_H = \frac{1200}{2} \times (1 + .13) = 678$ lbs.

SSE $V_H' = \frac{1200}{2} (1 + .32) = 792$ lbs.

For weld group,

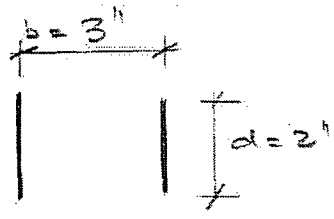

$S_W = \frac{d^2}{3} = \frac{4}{3}$ in^3/in

$J_W = \frac{d(3b^2 + d^2)}{6} = 10.33$ in^3/in

OBE

For M_1 (twisting),

$f_{1h} = \frac{9492 \times 3/2}{2 \times 10.33} = 459$ lbs/in. (horizontal)

$f_{1v} = \frac{9492 \times 3/2}{2 \times 10.33} = 689$ lbs/in (vert.)

CALCULATION SHEET

BECHTEL

CALC. NO. G-106-2 REV. NO. 0

ORIGINATOR S.K.M DATE 4.7.86 CHECKED [illegible] DATE 4/11/86

PROJECT PBAPS units 2 & 3 JOB NO. 11187-106

SUBJECT Control Room Upgrading HVAC supports SHEET NO. 39

For M2,

$$f_2 = \frac{420}{4/3} = 315 \text{ lbs/in}$$

For shear,

$$f_{3h} = \frac{678}{2 \times 2 \times 2} = 85 \text{ lbs/in.}$$

$$\therefore \text{Max. force/in} = \sqrt{(459 + 85)^2 + 315^2 + 689^2}$$

$$= 1933 \text{ lbs/in.}$$

SSE -

For M1,

$$f'_{1h} = \frac{11{,}088 \times 2/2}{2 \times 10.33} = 537 \text{ lbs/in}$$

$$f'_{1v} = \frac{11{,}083 \times 3/2}{2 \times 10.33} = 805 \text{ lbs/in}$$

For M2,

$$f_2 = \frac{1001}{4/3} = 751 \text{ lbs/in}$$

CALCULATION SHEET

BECHTEL

CALC. NO. G-106-2 REV. NO. 0

ORIGINATOR S.K.M. DATE 4.7.86 CHECKED [illegible] DATE 4/11/86

PROJECT PBAPS Units 2,3 JOB NO. 11187-106

SUBJECT Control Room Upgrading HVAC Supports SHEET NO. 40

For shear,

$$f'_{3h} = \frac{792}{2\times2\times2} = 99 \text{ lbs/in.}$$

Neglecting all other forces,

Max. force/in,

$$= \sqrt{(537+99)^2 + 751^2 + 805^2}$$

$$= 1271 \text{ lbs/in.}$$

capacity of 3/16" weld per inch,

OBE, $\frac{3}{16} \times 21000 \times .707 = 2784$ lbs/in > 933 lbs/in O.K.

SSE $\frac{3}{16} \times 21000 \times .707 \times 1.25 = 3480$ lbs/in > 1271 lbs/in

Hence the welds are O.K.

CALCULATION SHEET

BECHTEL

CALC. NO. G-106-2 REV. NO. 0

ORIGINATOR S. K. [illegible] DATE 4-7-86 CHECKED [illegible] DATE 4/11/86

PROJECT PBAPS UNITS 2 & 3 JOB NO. 11187-106

SUBJECT CONTROL ROOM UPGRADING SHEET NO. 41

HVAC supports.

CHECK SUPPORT ANGLES FOR BENDING DUE TO LONGITUDINAL SEISMIC FORCES –

The support L's have 30 lbs & 72 lbs forces per angle for OBE & SSE cases.

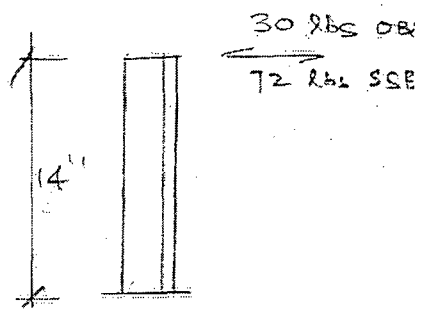

CHECK FOR SSE ONLY –

$M_{max} = 72 \times 14 = 868$ "#

$S_{min} = .589 \text{ in}^3$

$f_{b_{max}} = 1474$ psi $< .6 F_y < .9 F_y$ O.K.

This moment will cause torsion in base angle. But since duct is welded to one support, this will be shared by duct & the angle in proportion to their rigidity. By Engg. judgement, the torsional rigidity of one angle is virtually nothing compared to the bending rigidity of the 14" ⌀ duct. As such all the

CALCULATION SHEET

BECHTEL

CALC. NO. S-106-2 REV. NO. 0

ORIGINATOR X. K. M DATE 4-7-86 CHECKED [illegible] DATE 4/11/86

PROJECT PBAPS Units 2 & 3 JOB NO. 11187-106

SUBJECT Control Room Upgrading SHEET NO. 42

HVAC supports

moment caused by the longitudinal seismic force is taken by the duct in bending

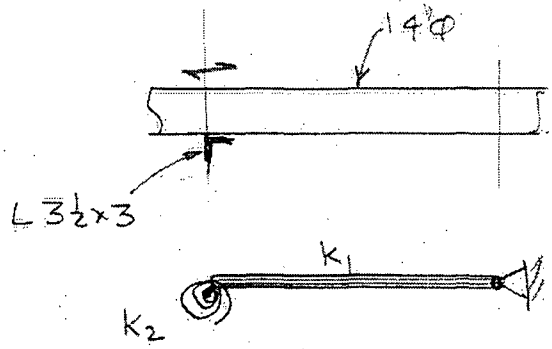

$K_1 >> K_2 \approx 0$.

Total Moment in duct,

$= 868 \times 2 = 1736$ in lbs from both angles

stress in duct, $= \frac{1736}{S}$ $S = 5.53 \text{ in}^3$

$= 314$ psi very small.

O.K.

CALCULATION SHEET

BECHTEL

CALC. NO. G-106-2 REV. NO. -0

ORIGINATOR D.K.M. DATE 4.7.86 CHECKED [illegible] DATE 4/11/86

PROJECT PBAPS units 2 & 3 JOB NO. 11187-106

SUBJECT Control Room Upgrading SHEET NO. 43

HVAC supports.

TOP SUPPORTING STEEL –

It is proposed to use W8x18 beams everywhere.

Maximum span = 8'4" = 100"

$S_x = 15.2 \text{ in}^3$

$d/A_f = 4.7$

$L_c = 5.5'$, $L_u = 9.9' > 8'4'' < 8'4''$

∴ use $F_b = .6F_y = 21.6$ ksi

$F'_b = .9F_y = 32.4$ ksi

∴ $M_{max.}$ allowed = 21.6 x 15.2
= 328 "K

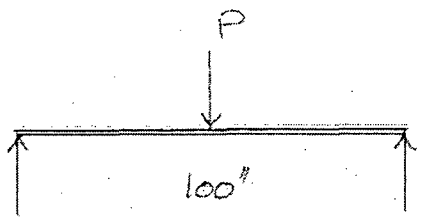

∴ $\frac{PL}{4} = 328$

$P = \frac{328 \times 4}{100} = 13^K$ (OBE)

$M'_{max} = 21.6 \times 15.2 \times 1.5 = 492$ "K

$P' = 19.7^K$

Hence W8x18 beam can take all loads from HVAC hangers.

CALCULATION SHEET

BECHTEL

Dm 9/11/86

ORIGINATOR D.V. MALLARI DATE 5/01/86 CHECKED KL 9/15/86 AMM DATE 5.1.86

CALC. NO. G-106-2 REV. NO. ~~0~~ 1

PROJECT PBAPS UNITS 2 & 3 JOB NO. 11187-106

SUBJECT CONTROL ROOM UPGRADING SHEET NO. ~~53~~ 44

H & V SUPPORT

ANCHORS

TENSION ON BOLTS:

HORIZONTAL SEISMIC:

CRITICAL CASE WILL BE IN TRANSVERSE DIRECTION.

ENVELOP THE FOLLOWING:

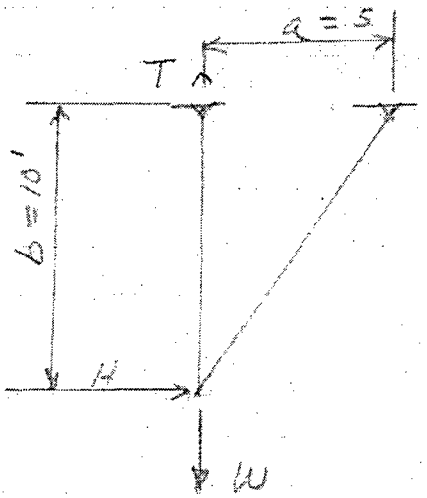

$a = 5$ FT

$b = 10$ FT

1 $W = 700$ LBS *

OBE: - 2% DAMPING

Horiz. $g = 0.09\,g$

SSE: - 5% Damping

Horiz. $g = 0.1 \times 2.4$

$= 0.24\,g$

SSE GOVERN:

$H = 0.24 \times 0.7$

$= 0.168^K$

Vert. $g = 0.24 \times \frac{2}{3} = 0.16^K$

$$T = \frac{10 \times 0.168}{5} + 0.7 \times 1.16$$

$$= 1.15^K$$

1 These weight is for Detail 7 shown on Dwg SKC-1044, Rev. 0. The detail has been deleted, however the 700 lb wt. still envelops the other supports.

CALCULATION SHEET

BECHTEL

Dom 9/11/86

ORIGINATOR D.V. MALLARI DATE 5/01/86 CALC. NO. G-1062 REV. NO. ~~0~~ 1

KL 9/15/86 CHECKED [illegible] DATE 5.1.86

PROJECT PBAPS UNITS 2 & 3 JOB NO. 11187-106

SUBJECT CONTROL ROOM UPGRADING SHEET NO. ~~59~~ 45 Δ

H & V SUPPORT

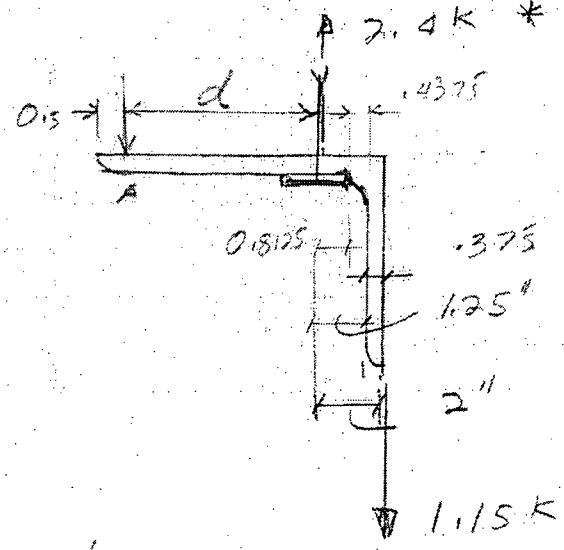

$\Sigma M_{@A} = 0$

$2.4^K d = 1.15(d + 2")$

$d = \frac{2.3}{2.4 - 1.15}$

$d = 1.84"$

MIN. LEG OF ANGLE = 0.5 + d + 1.75

$\ell = 0.5 + 1.84 + 2"$
$= 4.34"$

TO ALLOW FOR REDUCTION OF TENSION CAPACITY USE LONGER LEG,

USE L $5 \times 3\frac{1}{2} \times \frac{3}{8}$ LLH

$M = 1.15 \times 2 = 2.3$ "-k

EFFECTIVE $b = 1.5 + 6 \times 0.375$
$= 3.75"$

$f_b = \frac{6 \times 2.3}{3.75 \times 0.375^2} = 26.17$ KSI < 27 KSI — O.K.

USE L $5 \times 3\frac{1}{2} \times \frac{3}{8}$

*

REFERENCE DESIGN GUIDE C-2.4 Sh. 15, TENSION CAPACITY OF A $\frac{3}{4}$"φ EXP. ANCHOR = 2.4 K

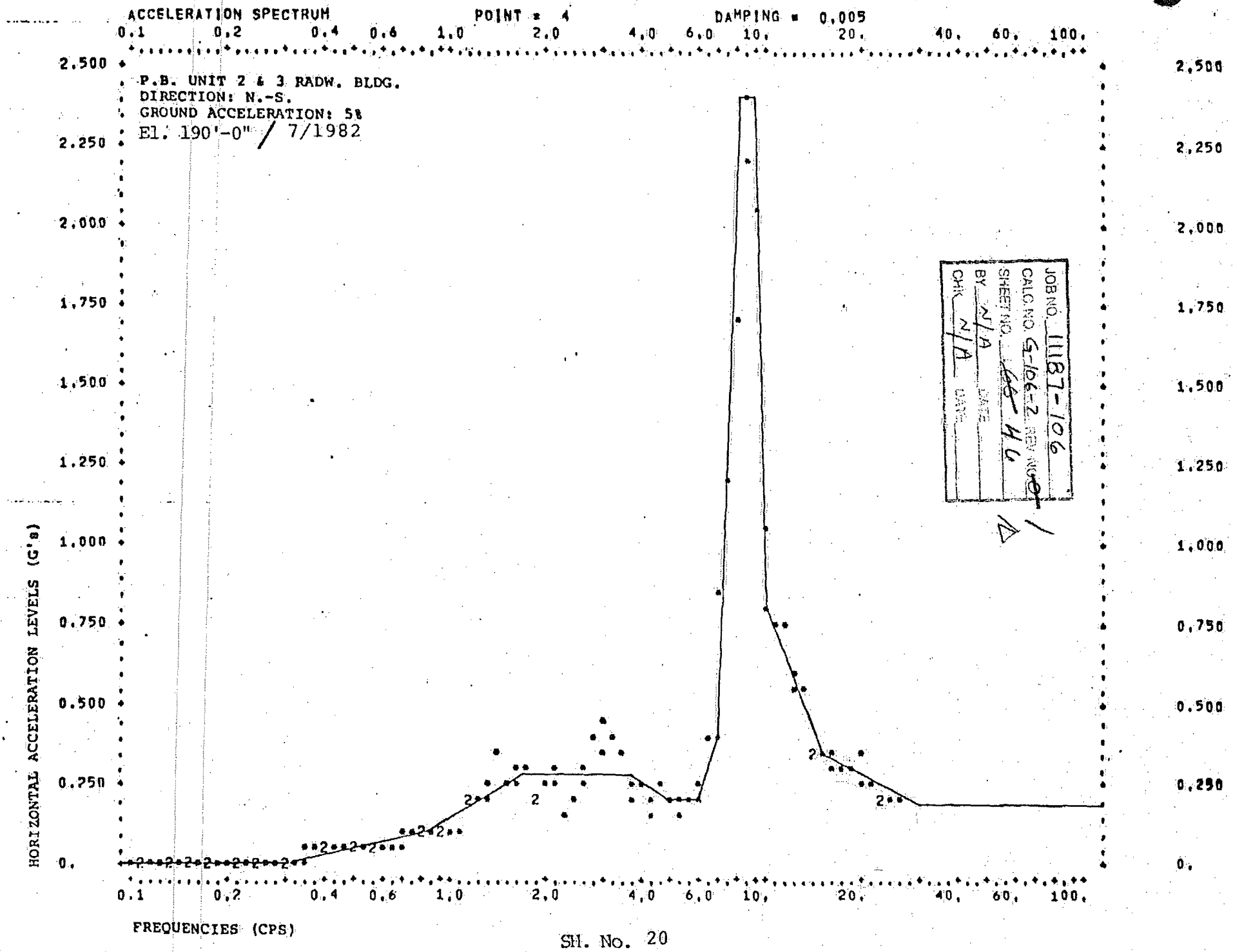
ACCELERATION SPECTRUM
POINT = 4
DAMPING = 0.005
P.B. UNIT 2 & 3 RADW. BLDG.
DIRECTION: N.-S.
GROUND ACCELERATION: 5%
El. 190'-0" / 7/1982
HORIZONTAL ACCELERATION LEVELS (G'S)
FREQUENCIES (CPS)
JOB NO. 11187-106
CALC. NO. S-106-2
SHEET NO. 46
BY N/A
CHK N/A

SH. No. 20

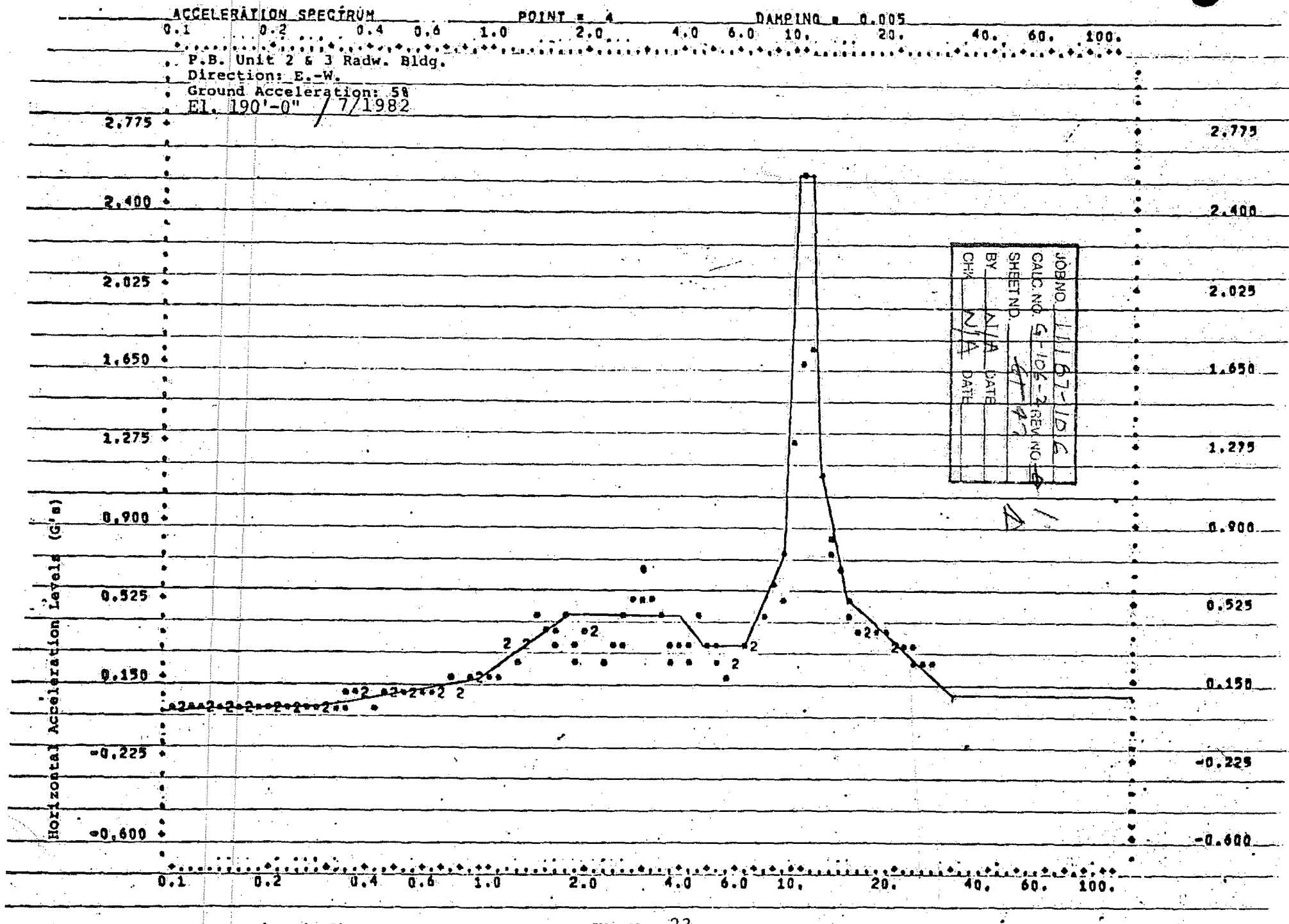
ACCELERATION SPECTRUM
POINT = 4
DAMPING = 0.005
P.B. Unit 2 & 3 Radw. Bldg.
Direction: E.-W.
Ground Acceleration: 5%
El. 190'-0" / 7/1982
JOB NO. 11187-106
CALC. NO. G-106-2 REV. NO. 0
SHEET NO. 1
BY N/A DATE
CHK N/A DATE
Horizontal Acceleration Levels (G's)
2.775
2.400
2.025
1.650
1.275
0.900
0.525
0.150
-0.225
-0.600
0.1
0.2
0.4
0.6
1.0
2.0
4.0
6.0
10.
20.
40.
60.
100.
Frequencies (CPS)

SH. No. 23

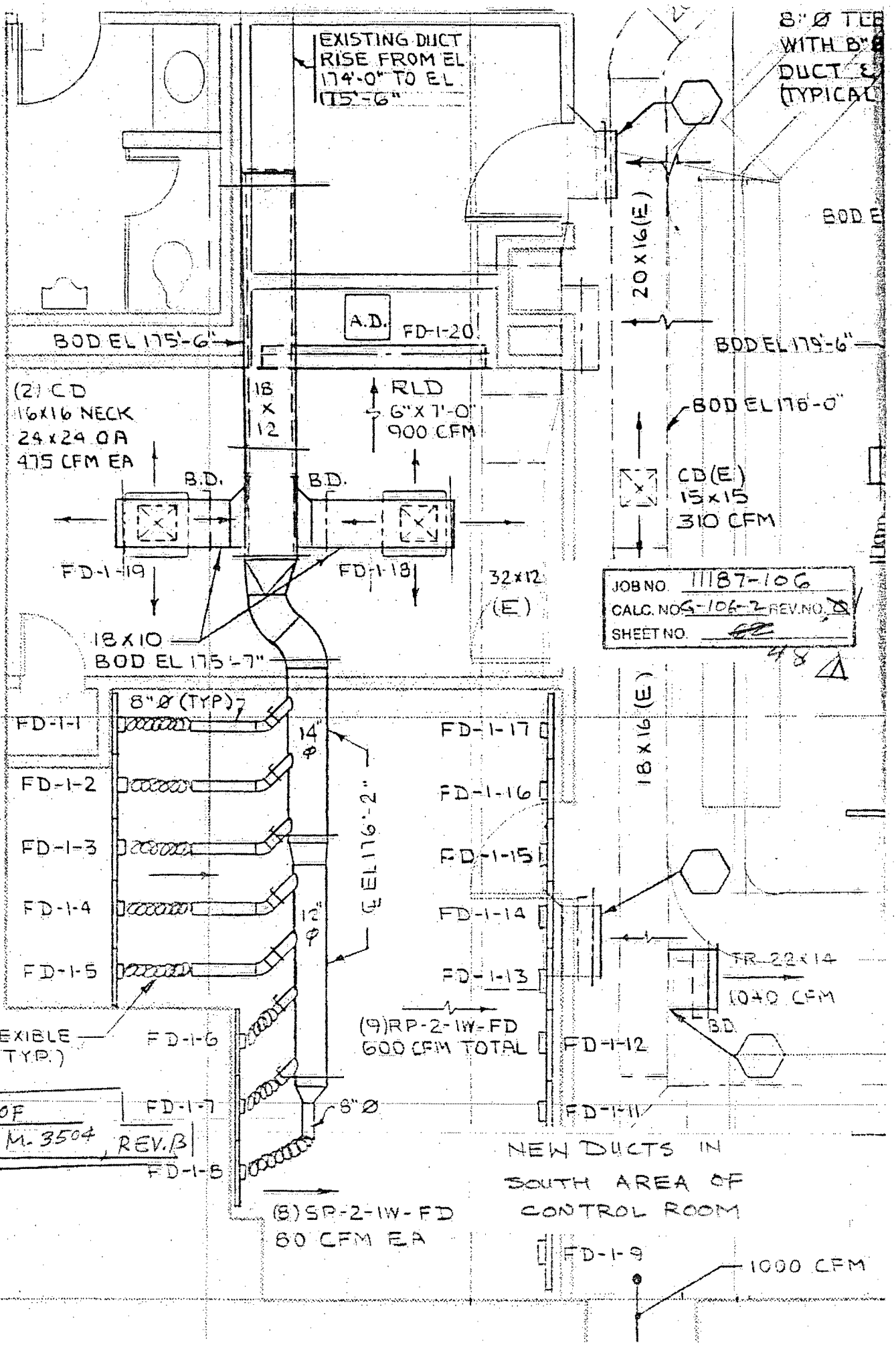
EXISTING DUCT RISE FROM EL 174'-0" TO EL 175'-6"
8" Ø TEE WITH 8" Ø DUCT (TYPICAL)
BOD EL
20 X 16 (E)
A.D.
FD-1-20
BOD EL 175'-6"
BOD EL 179'-6"
(2) CD
16X16 NECK
24 x 24 OA
475 CFM EA
18 X 12
RLD
6" X 7'-0"
900 CFM
BOD EL 176'-0"
B.D.
B.D.
CD (E)
15 x 15
310 CFM
FD-1-19
FD-1-18
32 x 12 (E)
JOB NO. 11187-106
CALC. NO. S-106-2 REV. NO. 0
SHEET NO. 48
18 X 10
BOD EL 175'-7"
8" Ø (TYP)
FD-1-1
FD-1-2
FD-1-3
FD-1-4
FD-1-5
14" Ø
12" Ø
℄ EL 176'-2"
FD-1-17
FD-1-16
FD-1-15
FD-1-14
FD-1-13
FD-1-12
FD-1-11
18 X 16 (E)
FR 22 x 14
1040 CFM
B.D.
8" Ø FLEXIBLE DUCT (TYP.)
FD-1-6
FD-1-7
FD-1-8
8" Ø
(9) RP-2-1W-FD
600 CFM TOTAL
PART OF DWG M-3504 REV. B
NEW DUCTS IN SOUTH AREA OF CONTROL ROOM
(8) SP-2-1W-FD
80 CFM EA
FD-1-9
1000 CFM

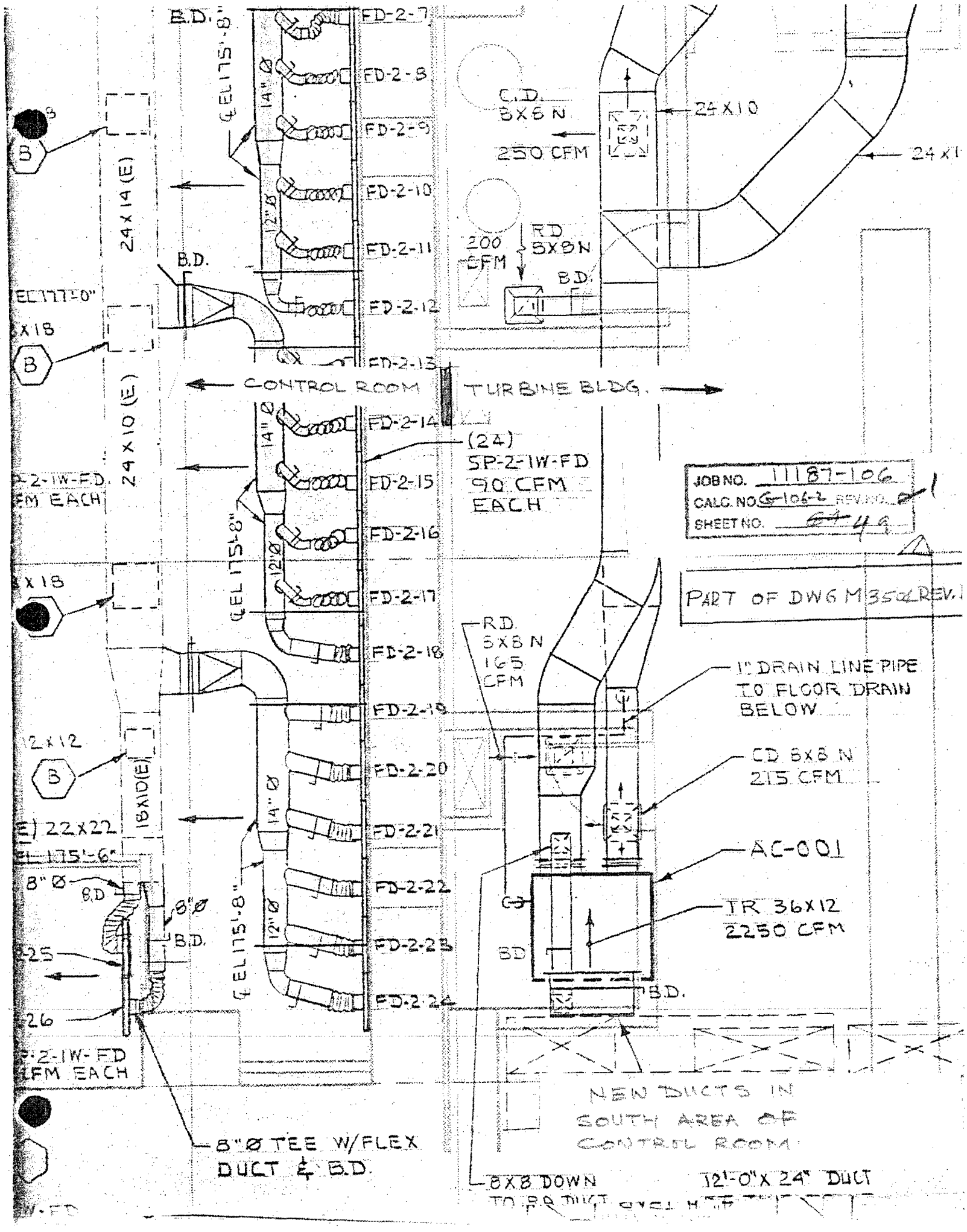
B.D.
FD-2-7
FD-2-8
FD-2-9
FD-2-10
FD-2-11
FD-2-12
FD-2-13
FD-2-14
FD-2-15
FD-2-16
FD-2-17
FD-2-18
FD-2-19
FD-2-20
FD-2-21
FD-2-22
FD-2-23
FD-2-24
℄ EL 175'-8"
14" Ø
12" Ø
24 X 14 (E)
24 X 10 (E)
18 X 10 (E)
C.D. 8X8 N
250 CFM
24 X 10
24 X 1
200 CFM
R.D. 8X8 N
B.D.
EL 177'-0"
CONTROL ROOM
TURBINE BLDG.
(24) SP-2-1W-FD 90 CFM EACH
JOB NO. 11187-106
CALC. NO. G-106-2 REV. NO. 1
SHEET NO. 49
PART OF DWG M350 REV. 1
R.D. 8X8 N 165 CFM
1" DRAIN LINE PIPE TO FLOOR DRAIN BELOW
CD 8X8 N 215 CFM
AC-001
TR 36X12 2250 CFM
EL 175'-6"
8" Ø
8" Ø
-25
-26
SP-2-1W-FD 1FM EACH
8" Ø TEE W/FLEX DUCT & B.D.
NEW DUCTS IN SOUTH AREA OF CONTROL ROOM
8X8 DOWN TO R.D. DUCT
12'-0" X 24" DUCT

CALCULATION SHEET

BECHTEL

CALC. NO. G-106-2 REV. NO. 3

ORIGINATOR Naz Dave DATE 9-26-87 CHECKED I J P DATE 10-15-87

PROJECT PBAPS UNIT 2 & 3 JOB NO. 11187-106

SUBJECT CONTROL ROOM UPGRADING - HVAC SUPPT SHEET NO. 50

CONTROL ROOM UPGRADING ~ HVAC SUPPORTS:

IN ORDER TO FACILIATE THE INSTALLATION OF NEW HVAC HANGERS, DETAIL 3 AND 4 / S-1044 ARE USED WITH MAX. CANTI. LENGTH OF 5'-6" FROM WALL. THEREFORE, THESE DETAILS ARE CHECKED FOR STRUCTURAL ADEQUACY.

TO PROVIDE FLEXIBILITY TO SUPPORT HANGER DET 2/S-1044 TO CARRY TWO DUCT LINES, WHICH RUN CLOSE TO EACH OTHERS, DET. 2 ALTERNATE IS DESIGNED FOR THIS PURPOSE.

THIS CALC. COVERS THE SUPPORT HANGERS FOR CONTROL ROOM UPGRADING ON DWG - M-3504. THE FINAL LOCATIONS OF SUPPORT HANGER WILL BE ADJUSTED DEPENDING ON FIELD CONDITION, AS LONG AS THE FOLLOWING ARE NOT EXCEEDED:

- MAX. SPACING OF HGS = 8'-4".
- MAX. LENGTH OF OVERHANGED DUCT = 2'-0"

THEREFORE, ANY DESIGN ASSUMPTIONS FOR THE TRIBUTARY LG. (TRANSV. OR VERT.) OF HG, WHICH ARE EXCEEDED 8'-4", ARE CONSIDERED CONSERVATIVE.

CALCULATION SHEET

BECHTEL

CALC. NO. G-106-2 REV. NO. 3

ORIGINATOR Nga Dala DATE 9-26-87 CHECKED I LP DATE 10-15-87

PROJECT PBAPS JOB NO. 11187-106

SUBJECT HVAC SUPPORTS SHEET NO. 51

DETAIL 3/S-1044: FOR M-3504 HANGERS.

EVALUATION OF DETAIL FOR MAX. CANTILEVED LENGTH OF 5'-6" FROM WALL.

MEMBER SIZES ARE ∠ 3½ x 3 x ¼ UNO.

ASSUMED DUCT IS 20" x 20" AND UNIT WT. @ 16#/FT. (INCLUDED SMALL DAMPERS)

ASSUMED TRIBUTARY LENGTH OF DUCT @ 10' MAX. IN VERT. & TRANSVERSE DIRECTION.

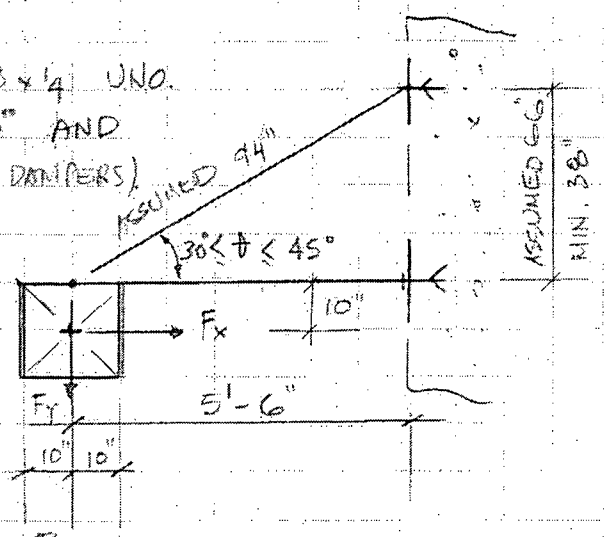

- CHECK VERTICAL FREQUENCY OF HANGER.

$F_y = 16^{\#}/FT \times 10' \approx$ SAY 200#

- DEFLECTION OF BRACE ∠ 3½ x 3 x ¼:

$$\delta_1 = \frac{PL}{AE} = \frac{(F_y/\sin\theta) \times L}{AE} \text{ (AXIAL ELONGAGE)}$$

$$\delta_1 = \frac{[0.2^{k}/\sin 30^\circ] \times 94''}{1.56^{in^2} \times 29000^{ksi}} = 0.0008''$$

$$\delta_{1y} = \delta_1 \times \sin\theta = 0.0008'' \times \sin 45^\circ = 0.0006'' \text{ (VERT. DISPL)}$$

CONSERV.

- DEFLECTION OF VERT. FRAME ∠ 3½ x 3 x ¼ x 20" LG:

$$\delta_{2y} = \frac{PL}{AE} = \frac{0.1^{k} \times 20''}{1.56^{in^2} \times 29000^{ksi}} = 0.00005'' \text{ (VERT. DISPL)}$$

- DEFLECTION OF HORZ. ∠ 3½ x 3 x ¼" (CANTI. PORTION 10" LG. CONTROLS THE DESIGN)

$$\delta_{3y} = \frac{PL^3}{3EI} = \frac{0.1^{k} \times 10''^3}{3 \times 29000^{ksi} \times 1.91^{in^4}} = 0.0006'' \text{ (VERT. DISPL)}$$

∴ CONSERV. TOTAL VERT. DISPLACEMENT:

$$\Sigma\delta_y = \delta_{1y} + \delta_{2y} + \delta_{3y} = 0.00125''$$

CALCULATION SHEET

BECHTEL

CALC. NO. G-106-2 REV. NO. 3

ORIGINATOR Ngadalo DATE 9-26-87 CHECKED I J P DATE 10-15-87

PROJECT PBAPS JOB NO. 11187-106

SUBJECT HVAC SUPPORTS SHEET NO. 52

. VERT. FREQUENCY OF HG:

$$f_{ny} = \frac{3.13}{\sqrt{\delta_y}} = 88.5 \text{ cps} \gg 30 \text{ cps (RIGID RANGE)}$$

_CHECK HORZ. FREQUENCY OF HG.

BY COMPARISON TO CALC. FOR VERT. FREQUENCY OF HG. ABOVE, HORIZONTAL FREQUENCY OF HG WILL BE IN THE RIGID RANGE ($f_{nx} \geq 30$ CPS)

_CHECK BRACE'S BASE PL:

ASSUMED MAX. LOAD ECCENTRICITY TO ℄ OF EAB (Z DIRECTION) IS 5".

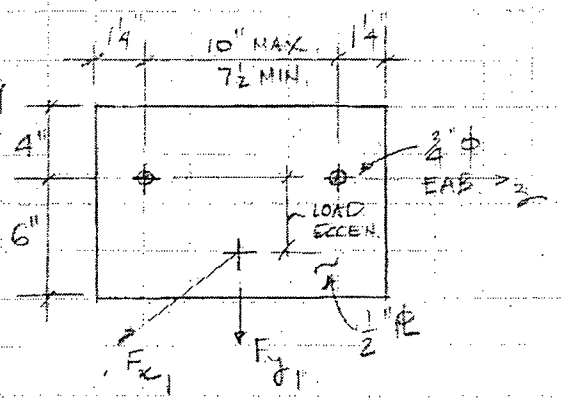

FOR HG + DUCT ON RIGID RANGE, SEISMIC ACCELERATIONS:

$a_V = 1.32\,g$, $a_H = 0.48\,g$

. REACTIONS ON BRACE'S BASE PL:

F_x DUE TO APPLIED F_y: $1.32 \times 0.2^k \times \frac{66''}{38''} = 0.5^k$

F_x DUE TO APPLIED F_x: $0.48 \times 0.2^k \times \frac{10''}{38''} = 0.03^k$

TOTAL $F_{x_1} = 0.5^k + 0.03^k = 0.53^k$

& $F_{y_1} = 1.32 \times 0.2^k = 0.30^k$

$M_{z_1} = F_{x_1} \times 5'' = 2.65^{IN\,K}$

CALCULATION SHEET

BECHTEL

CALC. NO. G-106-2 REV. NO. 3

ORIGINATOR Ngafaule DATE 9-26-87 CHECKED I JP DATE 10-15-87

PROJECT PBAPS JOB NO. 11187-106

SUBJECT HVAC SUPPORTS SHEET NO. 53

• REACTIONS ON EAB:

TENSION : $\frac{F_{x1}}{2} + \frac{0.5 M_{z1}}{\frac{2}{3} \times 4''} = 0.76^{k}$

SHEAR : $\frac{F_{y1}}{2} = 0.15^{k}$

$\Sigma R = \left[0.76^2 + 0.15^2\right]^{\frac{1}{2}} = 0.80^{k}$ < ALLOWABLE 2.4^{k} PER 8031-C-64

• BENDING STRESS ON PL:

$M_y = \frac{Pl}{4} = \frac{F_{x1} \times 10''}{4} = 1.325^{INK}$ (CONSERV.)

$S_y = \frac{at^2}{6} = \frac{10'' \times 0.5^2}{6} = 0.417^{IN3}$

$f_y = 1.325^{INK} / 0.417^{IN3} = 3.18^{KSI}$

& $S_z = \frac{bt^2}{6} = (7\frac{1}{2}'' + 2) \times 1\frac{1}{4}'')$ MIN. $\times \frac{0.5^2}{6} = 0.417^{IN3}$

$f_z = \frac{M_{z1}}{S_z} = 6.35^{KSI}$

TOTAL PL STRESS = CONSERVATIVELY TAKE $f_y + f_z$

$= 9.53^{KSI}$ LOW STRESS

PL IS OK.

SFP 20768 Rev. (6/76)

ED-69 (5/76)

CALCULATION SHEET

BECHTEL

CALC. NO. G-106-2 REV. NO. 3

ORIGINATOR Nga Dau DATE 9-26-87 CHECKED I J P DATE 10-15-87

PROJECT PBAPS JOB NO. 11187-106

SUBJECT HVAC SUPPORTS SHEET NO. 54

CHECK HORZ. MEMBER'S BASE PL:

ASSUMED MAX. LOAD ECCENTRICITY TO ℄ OF EAB (Z DIRECT.) IS 2".

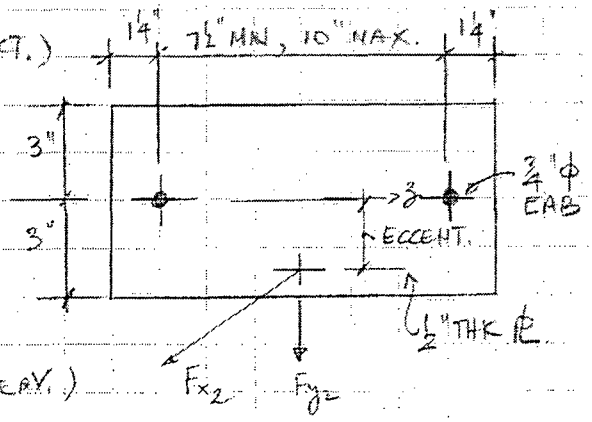

• REACTIONS ON BASE PL:

$F_{x2} = 0.53^k$ (SEE PREVIOUS PAGE)

$F_{y2} = 0.13^k$ (ASSUMED ~ CONSERV.)

$M_{z2} = F_{x2} \times 2'' = 1.06^{INK}$

• REACTIONS ON EAB:

$$\text{TENSION} = \frac{F_{x2}}{(2)} + \frac{0.5 M_{z2}}{\frac{2}{3} \times 3''} = 0.53^k$$

$$\text{SHEAR} = F_{y2}/(2) = 0.07^k$$

$$\Sigma R = (0.53^2 + 0.07^2)^{1/2} = 0.54^k < \text{ALLOW} = 2.4^k$$

OK

• BENDING ON PL:

$$M_y = \frac{F_{x2} \times 10''}{4} = 1.325^{INK}$$

$$f_y = 1.325 \Big/ \left(\frac{6 \times 0.5^2}{6}\right) = 5.3^{ksi}$$

$$f_z = \frac{M_{z2}}{S_z} = \frac{1.06^{INK}}{0.415^{IN^3}} = 1.5^{ksi}$$

TOTAL ~ CONSERV.: $f_y + f_z = 6.8^{ksi}$ — LOW

½" PL IS OK.

SFP-20768 Rev. (6/76) ED-69 (5/76)

CALCULATION SHEET

BECHTEL

CALC. NO. G-106-2 REV. NO. 3

ORIGINATOR Ngabale DATE 9-26-87 CHECKED T I P DATE 10-15-87

PROJECT PBAPS JOB NO. 11187-106

SUBJECT HVAC SUPPORTS SHEET NO. 55

DETAIL 4/S-1044 : FOR M-3504 HANGERS.

ASSUMED LONGITUDINAL TRIBUTARY LENGTH OF DUCT IS MAX. 40' (SEE HG. ARRANGEMENT NEXT PAGE)

- CHECK LONGITUDINAL FREQUENCY OF HG :

$F_z = 20^{\#}/FT \times 40' = 800^{\#}$

. DEFLECTION OF BRACE :

$\delta'_{1z} = \frac{PL}{AE} = \frac{(0.5 \times 0.8^{k}/\sin 30^{\circ}) \times 94''}{1.56^{in^2} \times 29000} = 0.001662''$ (AXIAL)

$\delta_{1z} = \delta'_z \times \sin\theta = 0.001662 \times \sin 45^{\circ} = 0.00175''$ (CONSERV.)

. DEFLECTION OF ∠ $3\frac{1}{2} \times 3 \times \frac{1}{4}''$ FRAME :

$\delta_{2z} = \frac{PL^3}{3EI} = \frac{[0.8^{k}/(4)] \times 10^{3}}{3 \times 29000 \times 1.91^{in^4}} = 0.0012''$

TOTAL DEFLECTION :

$\Sigma\delta_z = \delta_{1z} + \delta_{2z} = 0.002375''$

LONGITUDINAL FREQUENCY OF HG

$f_{nz} = \frac{3.13}{\sqrt{\delta_{zz}}} = 64$ CPS $\gg$ 30 CPS (RIGID RANGE)

$\therefore a_H = 0.48\,g$

CONT'S ON PAGE 57

CALCULATION SHEET

BECHTEL

CALC. NO. G-106-2 REV. NO. 3

ORIGINATOR [illegible] DATE 9-28-87 CHECKED I JP DATE 10-15-87

PROJECT PBAPS JOB NO. 11187-106

SUBJECT HVAC SUPPORTS SHEET NO. 56

ARRANGEMENT OF LONG. BRACE IN THE DUCT RUN.

DUE TO DUCT FRAME PROVIDED @ POINT ① TO ④, EACH CORNER OF DUCT WILL TRANSFER 1/4 OF TOTAL F_z.

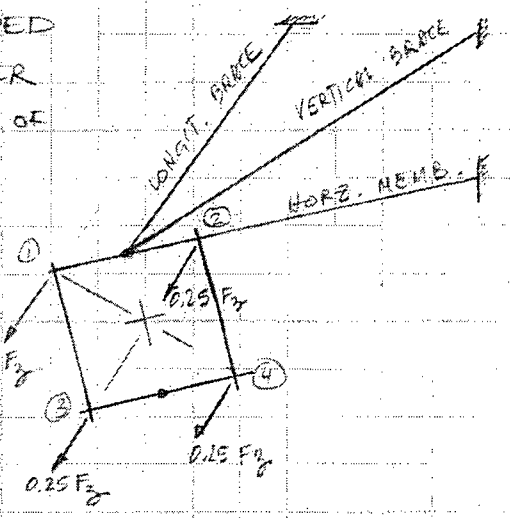

SINCE, THERE IS ONLY ONE LONGITUDINAL BRACE PROVIDED @ EITHER TOP OR BOTTOM OF DUCT TO TAKE LONGITUDINAL SEISMIC LOADING, THIS LEAVES HALF OF LONGITUDINAL SEISMIC LOADING UNRESTRAINED.

THEREFORE, IT IS NECESSARY TO PROVIDE AT LEAST:

- ONE REGULAR DET 4/S-1044 WHERE LONG. BRACE IS PROVIDED @ TOP OF DUCT, AND HORIZONTAL MEMBER LOCATED @ TOP OF DUCT,
- ONE INVERSE DET 4/S-1044 WHERE LONG. BRACE IS PROVIDED @ BOTT. OF DUCT, AND HORIZONTAL MEMBER LOCATED @ BOTTOM OF DUCT.

THESE HANGERS WILL BE SUFFICIENT TO WITHSTAND THE FULL SEIS. LOADING IN THE LONGITUDINAL DIRECTION.

CALCULATION SHEET

BECHTEL

CALC. NO. G-106-2 REV. NO. 3

ORIGINATOR Nigel Paul DATE 9-26-87 CHECKED I JP DATE 10-15-87

PROJECT PBAPS JOB NO. 11187-106

SUBJECT HVAC SUPPORTS SHEET NO. 57

- CHECK LONG. BRACE'S BASE PL.

LONGITUDINAL BRACE WILL CARRY HALF OF TOTAL SEIS F_z. BASE PL IS OK BY COMPARISON TO CALC. FOR VERT BRACE'S BASE PL ON PAGE # 2 AND ON.

- CHECK HORZ MEMBER'S BASE PL DUE TO VERT + LONG. LOADS.

REACTIONS ON BASE PL:

F_x DUE TO APPLIED $F_z = 0.48 \times \frac{0.8^k}{(2)} \times \frac{66''}{38''} = 0.33^k$

F_x DUE TO APPLIED $F_y = (1+0.32) \times 0.2^k \times \frac{66''}{38''} = 0.46^k$

TOTAL: $F_{x3} = 0.33^k + 0.46^k \simeq 0.8^k$

$F_{y2} = 0.13^k$ (ASSUMED)

$M_{z2} = F_{x3} \times 2'' = 1.60^{in\,k}$

BY COMPARISON TO CALC FOR HORZ. MEMBER'S BASE PL DUE TO TRANSVERSE + VERT LOADING ON PREVIOUS PAGE, BASE PL + ANCHORS ARE QUITE ADEQUATE.

CALCULATION SHEET

BECHTEL

CALC. NO. G-106-2 REV. NO. 3

ORIGINATOR Ngo Paula DATE 9-26-87 CHECKED I.P DATE 10-15-87

PROJECT PBAPS JOB NO. 11187-106

SUBJECT HVAC SUPPORTS SHEET NO. 58

CHECK GLOBAL BENDING OF DUCT LINE:

REF. TO CALC G-106-2 FOR RECTANGULAR DUCT SECTION PROPERTY.

CONSERVATIVELY, TAKE SECTION PROPERTIES FOR 8"×8" DUCT:

$I_x = I_y = 12.25 \text{ IN}^4$

$S_x = S_y = 3.06 \text{ IN}^3$

$M_x = \frac{1.32 \times 0.2^k \times 10' \times 12''/'}{8}$

$= 4.00 \text{ INK}$

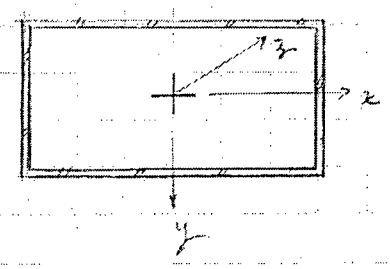

$M_y = \frac{0.48 \times 0.2^k \times 10' \times 12''/'}{8}$

$= 1.44 \text{ INK}$

CONSERV: $\frac{M_x}{S_x} + \frac{M_y}{S_y} = 1.8^{ksi} \sim$ NEGL.

∴ DUCT SECTION WILL WORK

DUCT LINE DEFLECTION: $\delta_y = \frac{1.32 \times 0.2^k \times (10 \times 12)^3}{192 \times 29000 \times 12.25} = 0.007''$

$\delta_x = 0.48 \times \frac{\delta_y}{1.32} = 0.003''$

TOTAL $\delta = (\delta_x^2 + \delta_y^2)^{\frac{1}{2}} \approx 0.008''$

CRITERIA: $\frac{\ell}{240} = \frac{120''}{240} = 0.5'' \gg 0.008''$

OK

CALCULATION SHEET

BECHTEL

CALC. NO. G-106-2 REV. NO. 3

ORIGINATOR Vgadade DATE 9-26-87 CHECKED I.J.P DATE 10-15-87

PROJECT PBAPS JOB NO. 11187-106

SUBJECT HVAC SUPPORTS SHEET NO. 59

CHECK HG & DUCT LINE AS SHOWN.

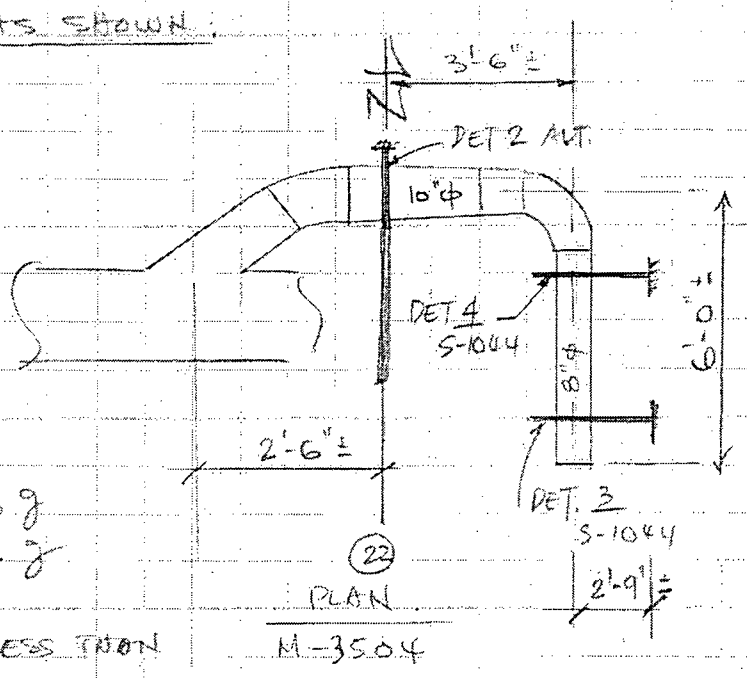

ESTIMATED UNIT WT. OF ROUND DUCT:

8"φ ≈ 5#/FT

10"φ ≈ 6#/FT

ROUND DUCT IS VERY RIGID. SUPPT. HG. 3 S-1044 IS ALSO IN RIGID RANGE.

SDS. ACCEL: $a_H = 0.48\,g$

$a_V = 1.32\,g$

SUPPORT SPACING IS LESS THAN 10' IN THE VERT. DIRECTION, HENCE DUCT + HANGER ARE OK BY COMPARISON TO PREVIOUS PAGES.

FOR LONG. DIRECTION DUCT SECTION @ SUPPORT COLUMN 22 WILL CARRY THE LOAD IN BENDING (ASSUMED NO LONG. SUPPT HG)

FOR 10"φ DUCT $I = 14.09^{IN^4}$, $S = 2.8^{IN^3}$ REF. CALC G-106-2, SHT. 21

$$\delta_g = \sum \frac{Pl^3}{3EI} = \left(\frac{1}{3 \times 29000 \times 14.09}\right) \times \left[0.05^{K}/_{1} \times 6' \times 42^3 + 0.06^{K}/_{1} \times 3.5' \times 21^3\right]$$

$$= 0.0197''$$

$$f_{n3} = \frac{3.13}{\sqrt{\delta_g}} = 22.3 \text{ CPS} < 30 \text{ CPS}$$

HENCE, ONE LONG. HG. DET 4 / S-1044 PROVIDED FOR DUCT LINE SHOULD BE ENOUGH TO BRING DUCT LINE FREQUENCY TO THE RIGID RANGE, IN SUCH CASE $a_H = 0.48\,g$

$$F_3 = 0.48 \times (5 \times 6 + 6 \times 3.5) = 24^{\#} \text{ NEGL.}$$

∴ DUCT + HGS ARE OK BY INSPECTION.

CALCULATION SHEET

BECHTEL

CALC. NO. G-106-2 REV. NO. 3

ORIGINATOR Dgopal DATE 9-26-87 CHECKED I JP DATE 10-15-87

PROJECT PBAPS JOB NO. 11187-106

SUBJECT HVAC SUPPORTS SHEET NO. 60

CHECK HG + DUCT LINE AS SHOWN:

ROUND DUCT & HG DET 3/S-1044 ARE RIGID IN THE VERTICAL & TRANSV. DIRECTIONS BY COMPARISION TO PREVIOUS ANALYSIS. ∴ OK. NO FURTHER INVESTIGATION IS REQUIRED, SINCE SPACING OF HG IS LESS THAN 10'-0.

- FOR LONGITUDINAL DIRECTION:

ESTIMATED DEAD WEIGHT OF ROUND DUCTS: 12"φ @ 7#/'
14"φ @ 8#/'

ASSUMED NO LONGITUDINAL BRACE HG IS PROVIDED, HENCE 14"φ DUCT SECTION @ JOINTING TO RECTANGULAR DUCT NEAR COL. (22) IS TO PROVIDE LONGITUDINAL RESTRAINT FOR ROUND DUCT LINE.

REF TO CALC G-106-2, SHT 21

$I = 38.68^{IN^4}$ FOR 14"φ DUCT

$S = 5.53^{IN^3}$

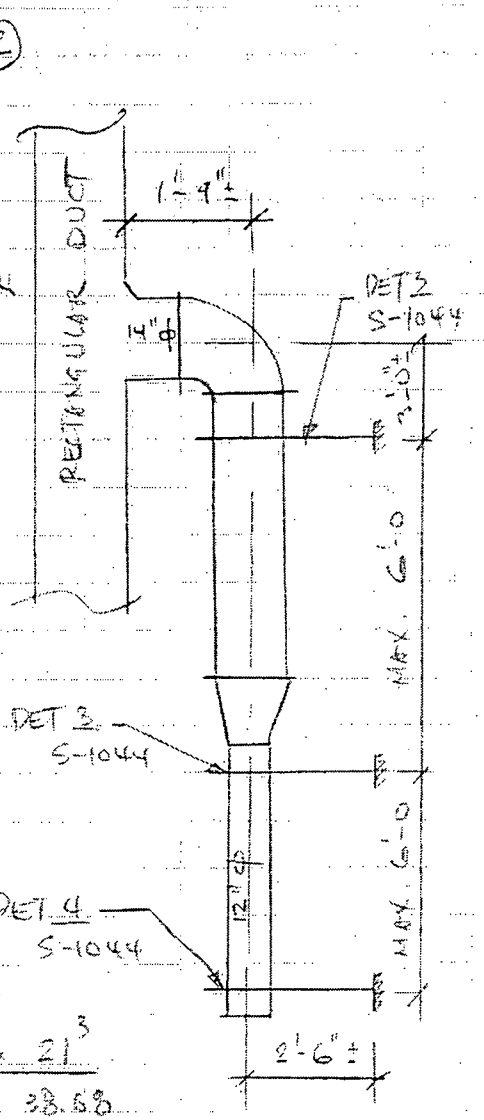

$$\delta_{st} = \frac{Pl^3}{3EI} = \frac{\left[(7^{\#}/_{1} \times 6') + (8^{\#}/_{1} \times 10.75')\right] \times 21^3}{1000 \times 3 \times 29000 \times 38.68}$$

$= 0.000353''$

$$f_{n2} = \frac{3.13}{\sqrt{\delta_{st}}} = 166.7 \text{ CPS} >> 30 \text{ PSI} \quad \text{OK}$$

(RIGID RANGE $\simeq a_H = 0.48\,g$)

HOWEVER, PROVIDE ONE LONGITUDINAL BRACED HANGER PER DET 4/S-1044 TO MINIMIZE BENDING STRESS @ JOINTING OF DUCT SECTIONS.

CALCULATION SHEET

BECHTEL

CALC. NO. G-106-2 REV. NO. 3

ORIGINATOR Nga Pacle DATE 9-27-87 CHECKED I J P DATE 10-15-87

PROJECT PBAPS JOB NO. 11187-106

SUBJECT HVAC SUPPORTS SHEET NO. 61

DETAIL 2/S-1044 ALTERNATE:

THIS DETAIL IS TO PROVIDE FLEXIBILITY TO SUPPORT HG. DET. 2/S-1044 TO CARRY TWO DUCT RUNS WHICH ARE CLOSE TO EACH OTHERS.

THE SUPPORT IS DESIGNED FOR MAX. DUCT SIZE OF 24" DUCT @ 10' MAX. TRANSVERSE OR VERTICAL SPACING & 20' MAX. LONGITUDINAL TRIBUTARY LENGTH OF DUCT.

- CHECK TRANSVERSE FREQUENCY OF HG.

DEAD WT OF 24" DUCT = ESTIMATED 18#/FT INCLUDED ALL OTHER HVAC EQUIPMENT DAMPERS ETC

$P_H = (2) \times 18^{\#}/_{FT} \times 10' = 360^{\#}$

- DEFLECTION @ BOTT. OF VERT. HG MEMB. $3\frac{1}{2} \times 3 \times \frac{1}{4}$

$$\delta_{x_1} = \frac{PL^3}{3EI} = \frac{[0.4^k/(4)] \times 24^3}{3 \times 29000 \times 1.911^{IN^4}}$$

$$= 0.0085''$$

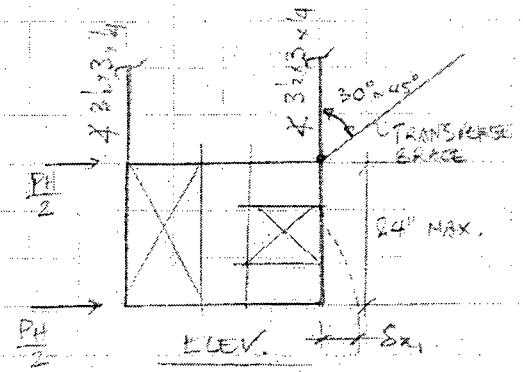

CONSIDERING THE EFFECT OF FRAME WHICH BOXES AROUND DUCT, THE DEFLECTION IS EXPECTED MUCH SMALLER.

ABOVE TOP OF DUCT, HANGER IS BUILT W/ INTERNAL K BRACING /OR TRANSVERSE BRACE, THE HORIZONTAL MOVEMENT OF K BRACE IS NEGLIGIBLE.

$$\therefore f_{nx} = \frac{3.13}{\sqrt{\delta_{x_1}}} = 34.3 \text{ cps} > 30 \text{ cps}$$

NOTE THAT LOADING IS FOR TWO 24" DUCT WHICH IS VERY CONSERVATIVE, FOR ACTUAL CASE HANGER USUALLY CARRIES ONE 24" MAX. DUCT + A SMALLER DUCT. HENCE, SAY HG IS IN RIGID RANGE, IN SUCH CASE $a_H = 0.48\,g$

CALCULATION SHEET

BECHTEL

CALC. NO. G-106-2 REV. NO. 3

ORIGINATOR Nyal Dale DATE 9-27-87 CHECKED I I P DATE 10-15-87

PROJECT PBAPS JOB NO. 11187-106

SUBJECT HVAC SUPPORTS SHEET NO. 62

$F_H = a_H P_H = 0.48 \times 0.4^k = 0.20^k$

$M = \frac{F_H}{4} \times 24'' = 1.20^{\text{IN K}}$

$f_{b_x} = \frac{1.20}{0.776^{\text{IN}^3}} = 1.60^{\text{KSI}}$ ~ LOW OK.

SECTION MODULUS OF ∠ 3½ x 3 x ¼

SINCE LOADING IS SMALL ~ OTHER DETAILS ARE O.K.

BY INSPECTION:

- CHECK VERTICAL FREQUENCY OF HG

• DEFLECTION OF MC-6x12:

$P_y = 0.4^k$ FOR (2) MEMBS

$w = (0.4^k/60'') = 0.0033^k/\text{IN}$

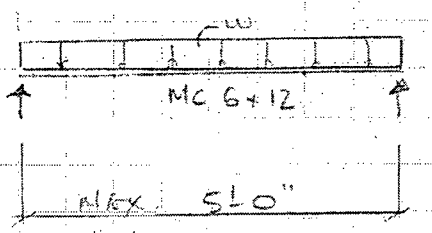

$\delta_{y_1} = \frac{5 w \ell^4}{384 EI}$

$= \frac{5 \times 0.0033 \times 60^4}{384 \times 29000 \times 1.87} = 0.0104''$

• VERT. ELONGATION OF ∠ 3½ x 3 x ¼:

$\delta_{y_2} = \frac{P\ell}{AE} = \frac{0.20^k \times 144''}{1.56 \times 29000} = 0.0064''$

TOTAL DEFLECTION $= \delta_{y_1} + \delta_{y_2} = 0.0104''$

$f_{ny} = \frac{3.13}{\sqrt{\delta_y}} \approx 29.9 \text{ CPS} \simeq 30 \text{ CPS}$

NOTE THAT LOADING IS CONSERVATIVE FOR (2) 24" DUCTS, AND THE DEFLECTION OF MC 6x12 DOES NOT TAKE INTO ACCOUNT THE RIGIDITY OF WELDED CONNECTION @ ENDS, THEREFORE THE ACTUAL DEFLECTION WILL BE MUCH LESS AND VERTICAL FREQUENCY OF HG. WILL BE IN THE RIGID RANGE (f_{ny} > 30 CPS) BY ENGINEERING JUDGEMENT.

CALCULATION SHEET

BECHTEL

CALC. NO. G-106-2 REV. NO. 3

ORIGINATOR Ngabaile DATE 9-27-87 CHECKED T.P. DATE 10-15-87

PROJECT PBAPS JOB NO. 11187-106

SUBJECT HVAC SUPPORTS SHEET NO. 63

CHECK LONGITUDINAL FREQUENCY OF HG:

$P_3 = \frac{18^k}{17} \times 20' \times (2) = 720^\# \simeq 0.8^k$

$w = \frac{P_3}{(2)60''} = 6\ \#/IN$

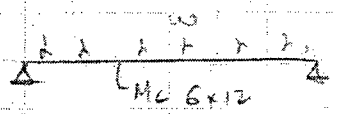

• DEFLECTION OF MC 6x12:

$\delta_{31} = \frac{5wl^4}{384EI} = \frac{5 \times 0.006 \times 60^4}{384 \times 29000 \times 18.7} = 0.0019''$

• DEFLECTION OF ∠ 3½ x 3 x ¼ @ BOTT. END: (LONG. BRACE W.P. @ ℄ LARGER DUCT)

$\delta_{32} = \frac{Pl^3}{3EI} = \frac{0.20^k \times 12^3}{3 \times 29000 \times 1.30} = 0.0031''$

• ELONGATION ON LONGITUDINAL BRACE:

$\delta_{33} = \frac{Pl}{AE} = \frac{(0.4^k/\sin 30^\circ) \times 187''}{3.12 \times 29000} = 0.0020''$

(2) ∠ 3½ x 3 x ¼ FOR $l > 120''$

TOTAL $\Sigma \delta_3 = 0.0070''$

$f_{n3} = \frac{3.13}{\sqrt{\delta_3}} = 37.4$ CPS > 30 CPS

IN THE RIGID RANGE.

CALCULATION SHEET

BECHTEL

CALC. NO. G-106-2 REV. NO. 3

ORIGINATOR Nga Baule DATE 9-27-87 CHECKED I J P DATE 10-15-87

PROJECT PBAPS JOB NO. 11187-106

SUBJECT HVAC SUPPORTS SHEET NO. 64

CHECK MC 6x12 FOR BIAXIAL BENDING:

HG IS IN RIGID RANGE: $a_H = 0.48\,g$
$a_V = 1.32\,g$

$$w_V = 1.32 \times \frac{0.4^k}{(2) \times 60''} = 0.0044\ ^k/IN.$$

$$w_H = 0.48 \times \frac{0.8^k}{(2) \times 60''} = 0.0032\ ^k/IN.$$

$$M_z = w_H \times \frac{\ell^2}{8} = 0.0032 \times \frac{60^2}{8} = 1.44\ ^{IN}K$$

$$f_x = \frac{1.44\ ^{IN}K}{6.24\ ^{IN3}} = 0.23\ ^{KSI}$$

$$M_y = w_V \times \frac{\ell^2}{8} = 0.0044 \times \frac{60^2}{8} = 2.0\ ^{IN}K$$

$$f_y = \frac{2.0\ ^{IN}K}{1.04} = 2.0\ ^{KSI}$$

TOTAL = CONSERV. $(f_x + f_y) = 3.44\ ^{KSI}$ LOW.
∴ SECTION WILL WORK.

∴ HANGER IS IN RIGID RANGE, LOAD IS SMALL. THEREFORE OTHER DETAILS ARE OK BY INSPECTION OR BY COMPARISON TO DESIGN ON CALC. G-106-2.

CALCULATION SHEET

CALC. NO. G-106-2 REV. NO. 3

ORIGINATOR Nga Dank DATE 9-27-87 CHECKED I J P DATE 10-15-87

PROJECT PBAPS JOB NO. 11187-106

SUBJECT HVAC SUPPORTS SHEET NO. 65

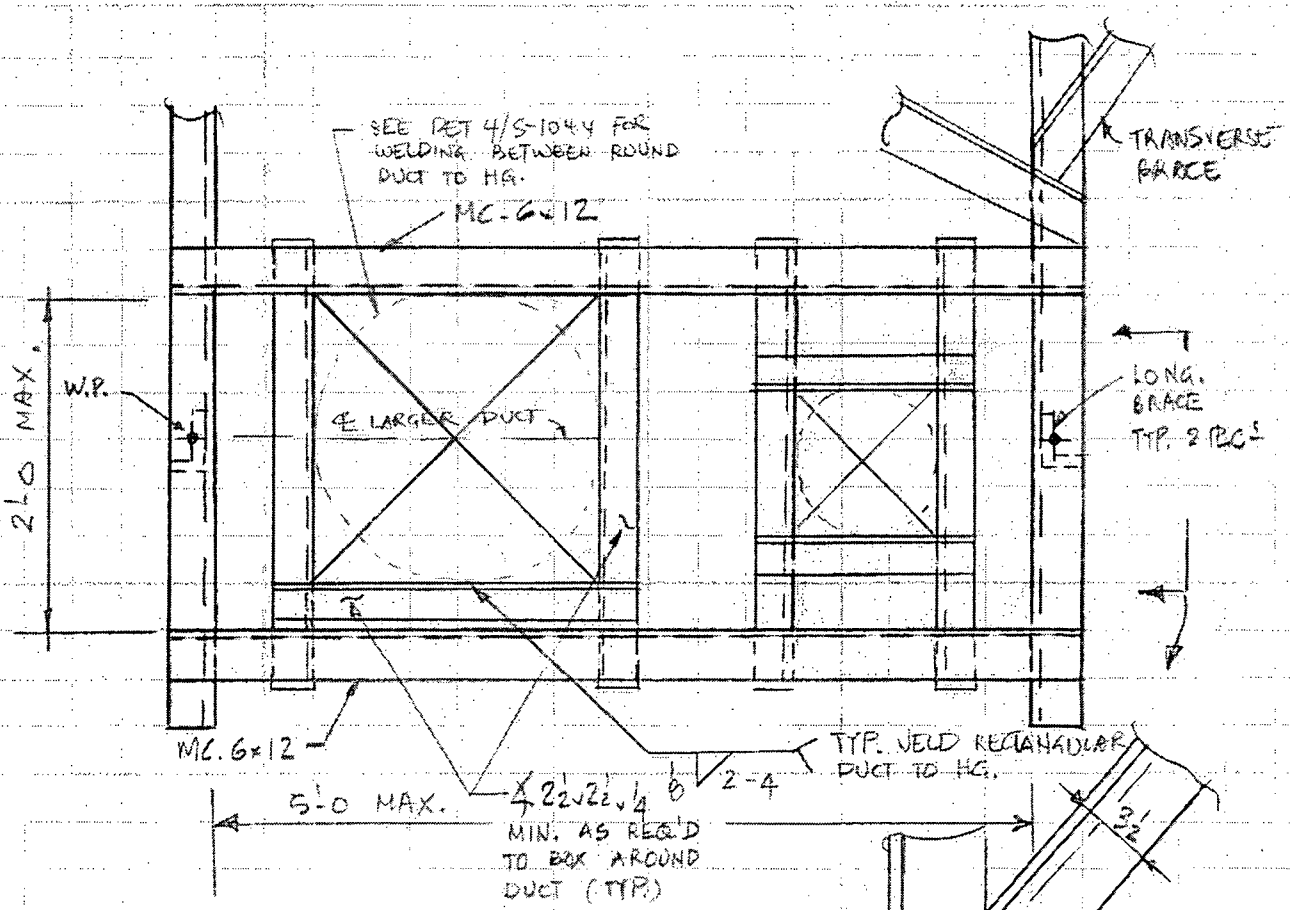

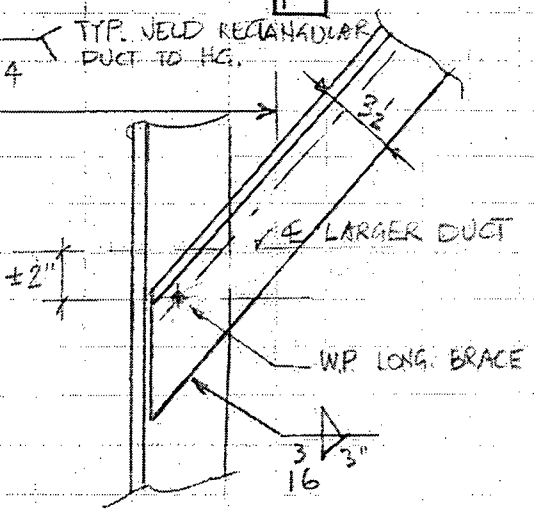

TYPICAL H & V DUCT SUPPORT DETAIL

CEILING MOUNTED DET. 2 ALTERNATE

S-1044

NOTE: FOR DETAILS NOT SHOWN SEE DET 2/S-1044.

CALCULATION SHEET

BECHTEL

CALC. NO. G-106-2 REV. NO. 3

ORIGINATOR Nga Dale DATE 9-28-87 CHECKED I I P DATE 10-15-87

PROJECT PBAPS JOB NO. 11187-106

SUBJECT HVAC SUPPORTS SHEET NO. 66

TYP. WELD BETWEEN DUCT TO LONGITUDINAL BRACE HG:

- FOR ROUND DUCT:

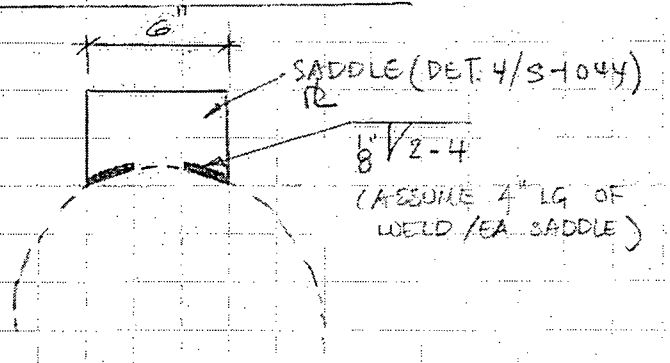

MIN. TOTAL LENGH OF WELD:
4" x (2) SADDLES = 8"
WELD CAPA. ~ ASSUMED DUCT SHELL THICKNESS IS *24 GAGE:

$F_{all} = 0.3 \times 2 \times F_u = 0.3 \times 0.0239" \times 45^{ksi} = 0.323^{k}/_{IN}$

TOTAL SEIS. ALLOWABLE LOAD: $F_a = 0.323^{k}/_{IN} \times 8" = 2.58^{k}$

SINCE DUCT + HANGER ARE DESIGNED IN THE RIGID RANGE ($f_n > 30$ CPS), THE SEISMIC ACCEL^{S} ARE EXPECTED SMALL i.e. $a_H = 0.48\,g$, $a_V = 1.33\,g$, THEN SEISMIC LOAD ON HG IS EXPECTED MUCH SMALLER THAN 2.58^{k} ($\approx 0.48 \times 800 = 0.4^{k}$) SUCH WELD IS QUITE ADEQUATE.

* THIS ASSUMPTION IS CONSERVATIVE. FOR DUCT THINNER THAN 18 GAGE, RIVETING IS USED IN LIEU OF WELDING.

- FOR RECTANGULAR DUCT:

MIN. WELD IS STITCH 2" @ 4" SPACING AT LEAST ON TWO SIDES PLUS ADDITIONAL 2" WELD @ CORNER CHORD AS SHOWN ON DET 2/S-1044.

SINCE DUCT + HANGER ARE DESIGNED IN THE RIGID RANGE, SEISMIC LOAD IS EXPECTED SMALL, THEREFORE THE WELDING BETWEEN DUCT AND HANGER IS O.K. BY ENGINEERING JUDGEMENT.

CALCULATION SHEET

BECHTEL

CALC. NO. G-106-2 REV. NO. 4

ORIGINATOR S. CASTORIANO DATE 6/20/88 CHECKED JHA DATE 6/21/88

PROJECT PBAPS JOB NO. 18247

SUBJECT CONTROL ROOM UPGRADE SHEET NO. 67

REF. ERR P-4727 MOD 1729

PROBLEM: HGR N°33 CAN NOT BE INSTALLED AS SHOWN IN THE DESIGN DRAWINGS

TOTAL WEIGHT OF DUCT AND HGR = 225 lbs
(REF. SHT 6 CALC. No. G-106-2)

MAX ACCELERATION = 2.6g (E-W)

FOR 1/2% damping REF SHT 47 CALC. N° G-106-2

Vertical Acceleration = $2.6 \times \frac{2}{3} = 1.73\,g$

LOADS

Vertical Load = $225(1.73+1) = 614^{\#}$ ↕

E-W Load = $225 \times 2.6 = 585^{\#}$ ↓

CALCULATION SHEET

BECHTEL

CALC. NO. G-106-2 REV. NO. 4

ORIGINATOR S. CASTORIANO DATE 6/20/88 CHECKED JHA DATE 6/21/88

PROJECT PBAPS JOB NO. 18247

SUBJECT CONTROL ROOM UPGRADE SHEET NO. 68

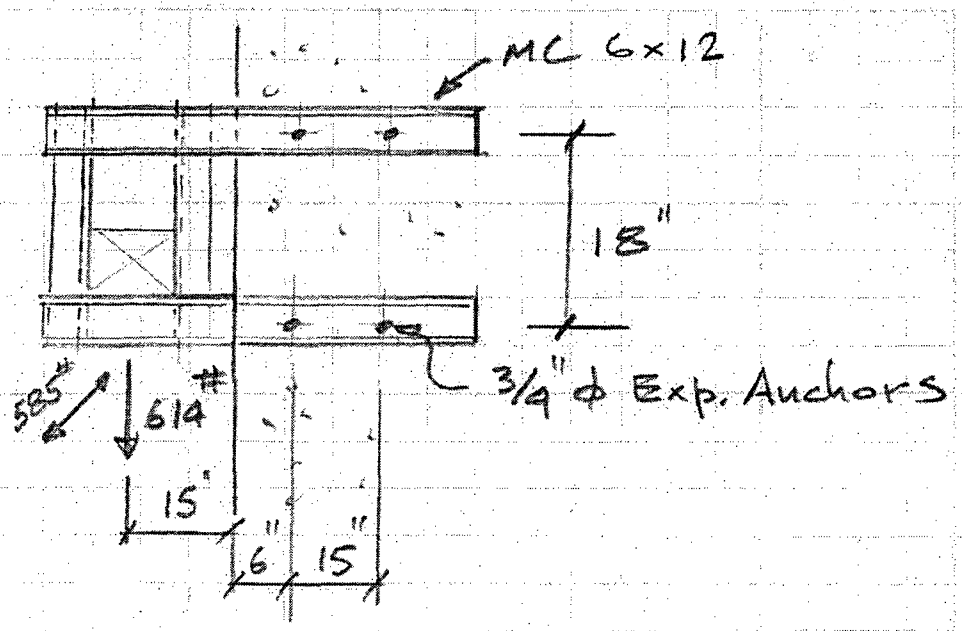

check Expansion Anchors

$M = 614^{\#} \times (15'' + 6'' + 7.5'')$

$= 614 \times 28.5'' = 17499^{\#-''}$

Each Channel will take : $\frac{M}{2} = \frac{17499}{2} = 8749^{\#-''}$

shear per Anchor $= \frac{8749}{15} = 583^{\#}$

Tension

$M = 585 \times (15 + 6 + 7.5) = 16672^{\#-''}$

Estimate Tension $= \frac{16672}{15} = 1111^{\#}$ *

Combine Vectorially $= \sqrt{1111^2 + 583^2} = 1254^{\#} < 2400^{\#}$

(REF. SPEC. 8031-G-64)

CALCULATION SHEET

BECHTEL

CALC. NO. G-106-2 REV. NO. 4

ORIGINATOR S. CASTORIANO DATE 6/20/88 CHECKED JHA DATE 6/21/88

PROJECT PBAPS JOB NO. 18247

SUBJECT CONTROL ROOM UPGRADE SHEET NO. 69

check channel

MC6×12 ($S_{xx} = 6.24$ $S_{yy} = 1.04$)

$$f_{b_{xx}} = \frac{8749}{6.24} = 1.4^{ksi}$$

$$f_{b_{yy}} = \frac{16672}{1.04} = 16^{ksi}*$$

$$1.4 + 16 = 17.4^{ksi} < 21.6^{ksi}$$

* THIS VALUE IS VERY CONSERVATIVE BECAUSE IT ASSUMES THAT ALL THE LOAD WILL BE RESISTED BY ONLY ONE CHANNEL

CALCULATION SHEET

BECHTEL

CALC. NO. G-106-2 REV. NO. 4

ORIGINATOR S. CASTORIANO DATE 7/19/88 CHECKED JHA DATE 7/21/88

PROJECT PBAPS UNITS 2 & 3 JOB NO. 18247-106

SUBJECT DUCT SUPPORT (MOD No. 1729) SHEET NO. 70

REFERENCE: ERR # P-4926

PROBLEM: EXHAUST DUCT 18" x 18" NEAR THE WEST WALL IN THE SOUTH SIDE OF THE CONTROL ROOM HAS A VERTICAL DROP OF APPROX. 7'-0" WITH TWO 75° ELBOWS. IT IS OBVIOUS THAT THIS PORTION OF THE DUCT REQUIRES A VERTICAL AND HORIZONTAL RESTRAINT. (REF. DWG 437049-4)

SOLUTION

ADD ADDITIONAL SUPPORT APPROXIMATELY 9" ABOVE CEILING (EL. 173') AND CONNECT TO WEST WALL.

SHT 2 OF ERRF P-4926 SHOWS THE ONLY ACCEPTABLE WAY TO FRAME THE SUPPORT WITHOUT INTERFERING WITH OTHER COMMODITIES.

CALCULATION SHEET

CALC. NO. G-106-2 REV. NO. 4

ORIGINATOR S. CASTORIANO DATE 7/19/88 CHECKED JHG DATE 7/21/88

PROJECT PBAPS UNITS 2 & 3 JOB NO. 18247-106

SUBJECT DUCT SUPPORT (MOD Nº 1729) SHEET NO. 72

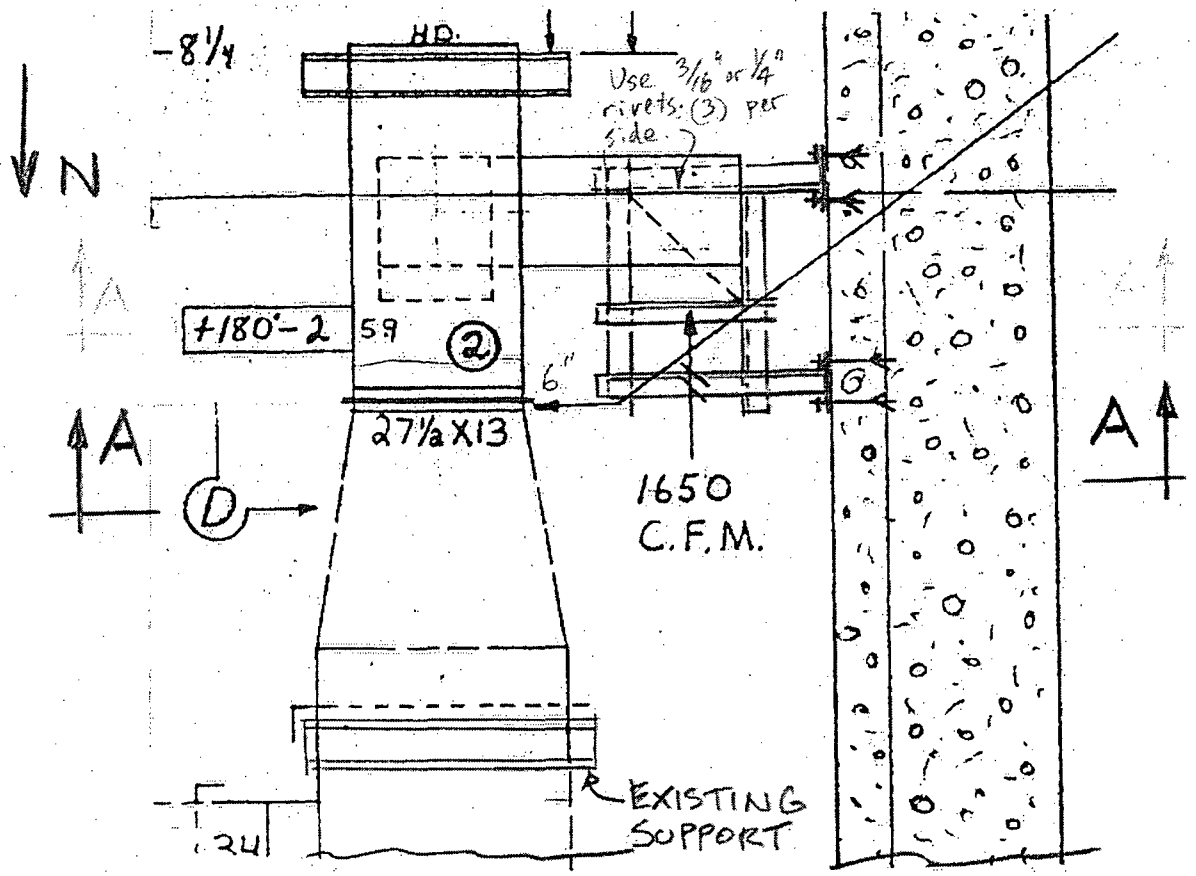

PLAN

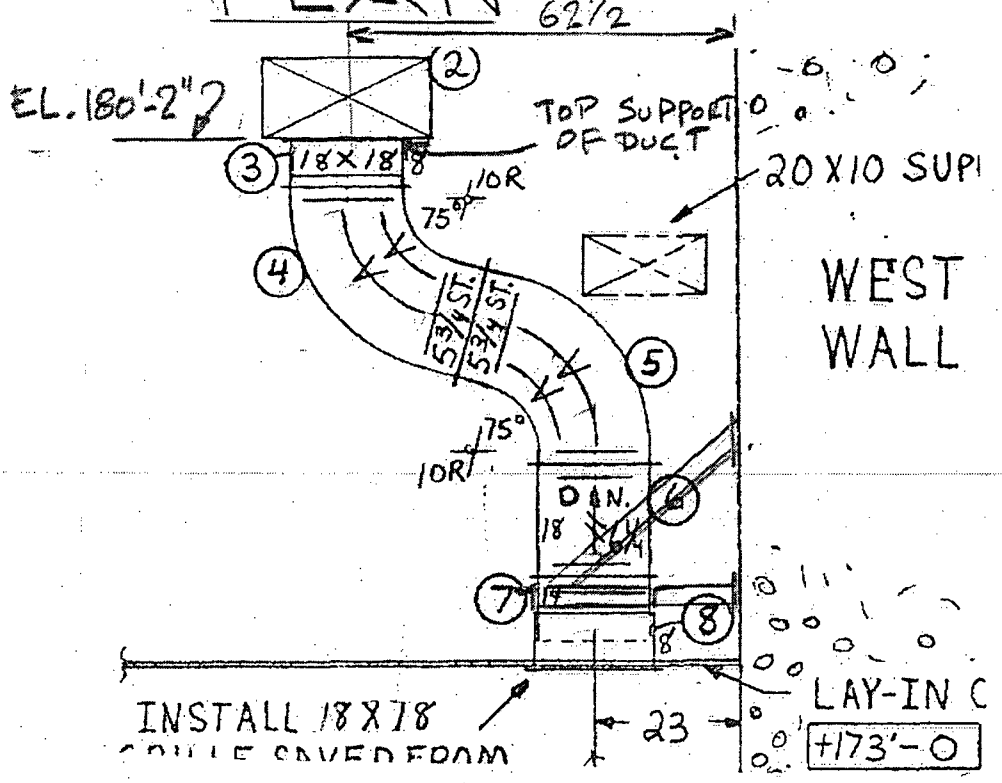

SECT A-A

SEP 2076B Rev. (6/76)

CALCULATION SHEET

CALC. NO. G-106-2 REV. NO. 4

ORIGINATOR J. Annett DATE 7/20/88 CHECKED SC DATE 7/21/88

PROJECT PBAPS Units 2 & 3 JOB NO. 18247-106

SUBJECT Duct Support (Mod # 1729) SHEET NO. 72

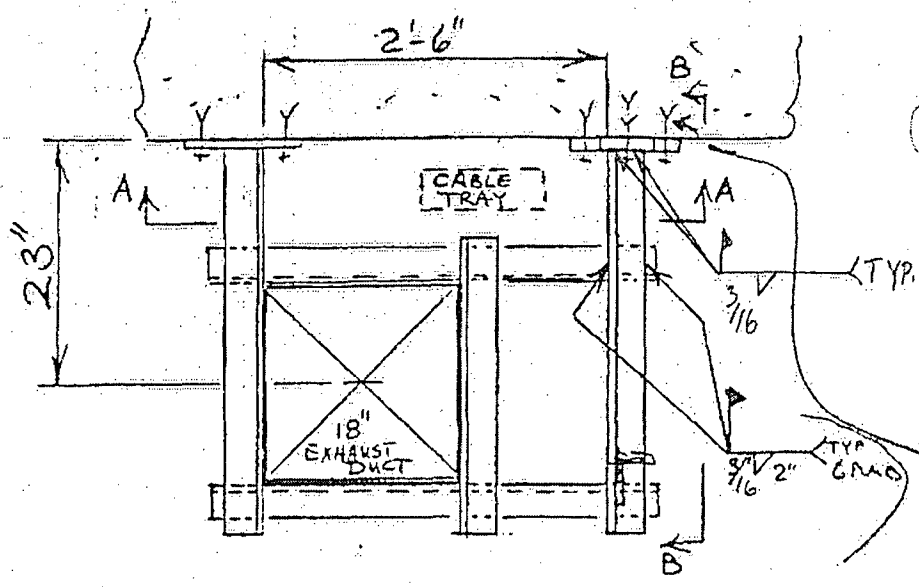

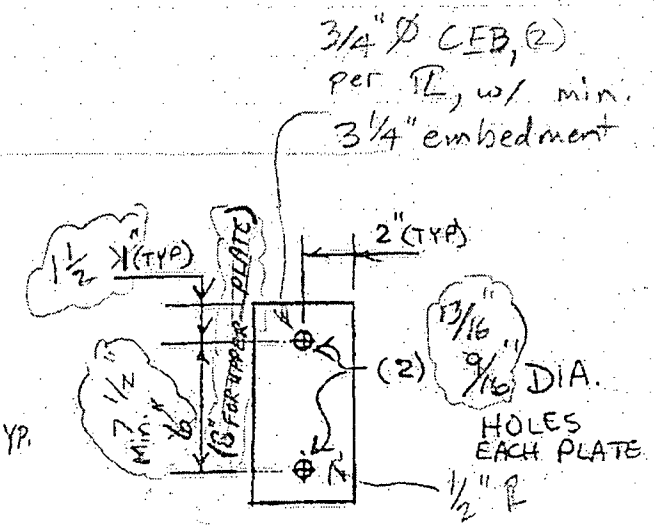

BASE PLATE DETAIL #1

1/2" DIA. C.E.B. (2) PER BASE PLATE
MIN. EMB. 2 1/4"

→ N

PLAN VIEW
NTS

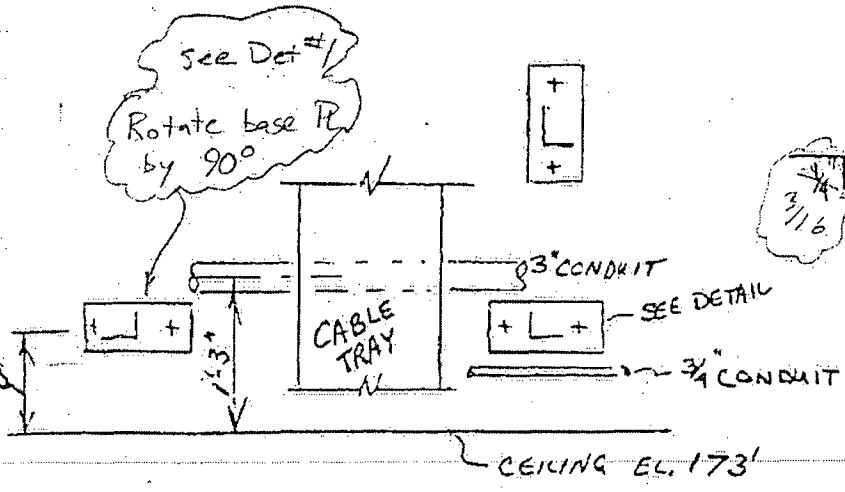

SECTION 'A-A' (ELEV. LKG. WEST)

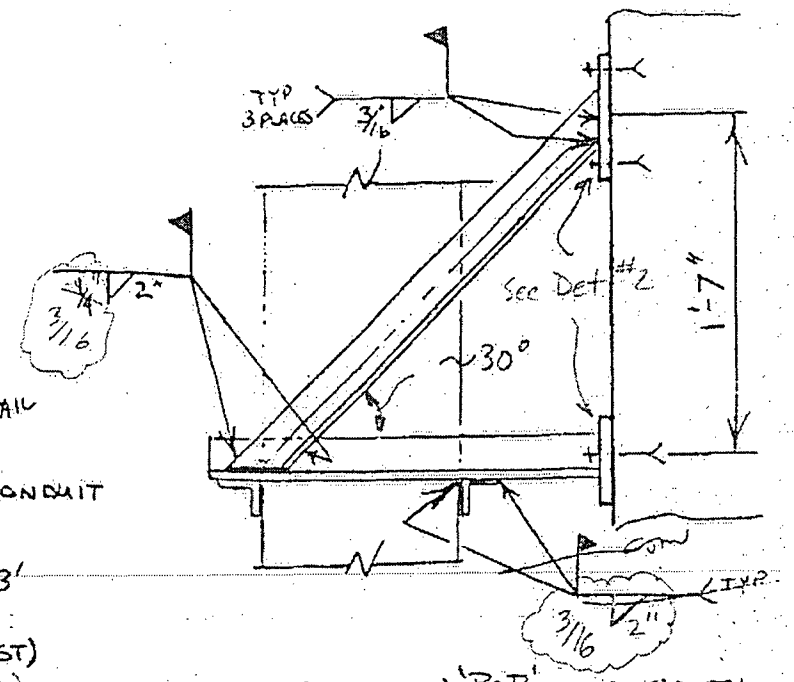

SECTION 'B-B' LKG SOUTH
(NTS)

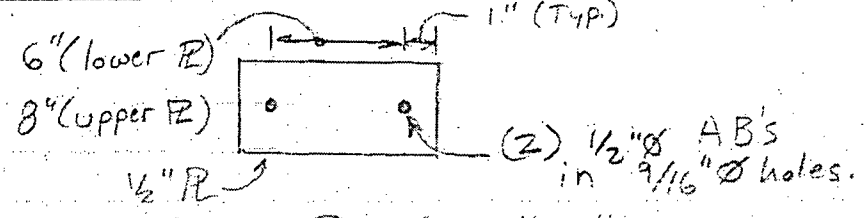

Base PL Detail #2

SEP 20768 Rev. (6/76)

CALCULATION SHEET

BECHTEL

CALC. NO. G-106-2 REV. NO. 4

ORIGINATOR S. CASTORIANO DATE 7/19/88 CHECKED JHU DATE 7/22/88

PROJECT PBAPS UNITS 2 & 3 JOB NO. 18247-106

SUBJECT DUCT SUPPORT (MOD Nº 1729) SHEET NO. 73

Weight of Duct

Including elbows total Length ≃ 10'

Duct size 18×18 22 GAGE

Weight per foot ⇒ 8.44 lbs/ft

1" Insulation @ 3lbs/cuft ⇒ $\frac{3}{12} \times 1.5'' \times 4 \times 10^{ft} = 15^{lbs}$

Weight of 10ft Duct = 8.44 × 10 = 84.4 lbs

Insulation = 15 lbs

Misc. 100% of 84.4 lbs = 84.4 lbs

Total Weight = 183.8

Say 200 lbs

Weight of support:

3 × 3½ × ¼ (W = 5.4/ft)

Linear ft of Angles = $2 \times 3 + 1 \times 2 + 2 \times 3 + \frac{\sqrt{32^2 + 19^2}}{12}$

= 6 + 2 + 6 + 3.25 = 17.25 ft

Weight = 17.25 × 5.4 = 93 lbs

CALCULATION SHEET

BECHTEL

CALC. NO. G-106-2 REV. NO. 4

ORIGINATOR S. CASTORIANO DATE 7/19/88 CHECKED JHG DATE 7/21/88

PROJECT PBAPS UNITS 2 & 3 JOB NO. 18247-106

SUBJECT DUCT SUPPORT (MOD Nº 1729) SHEET NO. 74

Accelerations:

OBE ⇒ ½% damping, EL. 190'-0" { N-S ⇒ 2.42 g*, E-W ⇒ 2.55 g* }

DBE ⇒ 2% damping, EL. 190'-0" { N-S ⇒ 1.68×2.4g = 4.03g*, E-W ⇒ 1.4×2.4g = 3.36g* }

By Inspection DBE (N-S) Earthquake governs:

Vertical Acceleration = $4.03 \times \frac{2}{3} = 2.69\,g$

*Reference Spec. 11187-G-14 Appendix C

South bracket to be analyzed to support ½ the support load, somewhat conservative since north bracket is stiffer and will carry more than ½ of the load. North bracket O.K by comparison to South bracket.

$$P = \left(45 + \frac{100}{2}\text{ lbs}\right) \times (2.69 + 1) = 350^{\text{lbs}} \downarrow$$

Horizontal load N-S = $95 \times 4.03 = 382^{\text{lbs}}$

$$M_{vertical} = 350^{\text{lbs}} \times 23 = 8050^{\text{lbs-in}}$$

$$M_{Horiz} = 383^{\text{lbs}} \times 23 = 8810^{\text{lbs-in}}$$

CALCULATION SHEET

BECHTEL

CALC. NO. G-106-2 REV. NO. 4

ORIGINATOR S. CASTOKIANO DATE 7/19/88 CHECKED JHY DATE 7/21/88

PROJECT PBAPS UNITS 2 & 3 JOB NO. 18247-106

SUBJECT DUCT SUPPORT (MOD Nº 1729) SHEET NO. 75

Assume angle support 3 x 3 x 1/4 (S = 0.577)

$$f_b = \frac{8050+8810}{0.577} = 29220 \text{ psi} < .9F_y = 32.4 \text{ ksi}$$

o.k

Size of Weld:

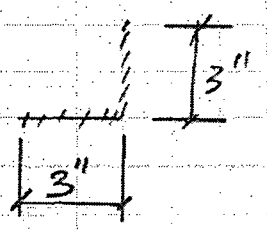

$$S_{\text{bottom}} = \frac{d^2(4b+d)}{6(2b+d)} = \frac{3^2(4\times3+3)}{6(2\times3+3)} = 2.50$$

$$f_1 = \frac{16860}{2.5} = 6744^{\#}$$

$$f_2 = \frac{350+383}{6} = \frac{733}{6} = 123^{\#}$$

Total Load = 6744+123 = 6967#

Assume 3/16" fillet = $\frac{6967}{3/16 \times 1}$ = 37157 psi

> 18,000 psi O.K

N.G

Try a more accurate method

$$f_w = \sqrt{\left(\frac{8050}{7.5} + \frac{8810}{2.5}\right)^2 + \left(\frac{350}{6}\right)^2 + \left(\frac{383}{6}\right)^2} = 4.6 \text{ k/in}$$

$$\therefore \frac{4.6 \text{ k/in}}{3/16 \times 1} = 24.53 \text{ ksi} > 18 \text{ ksi} \quad \text{N G}$$

CALCULATION SHEET

BECHTEL

CALC. NO: G-106-2 REV. NO. 4

ORIGINATOR Jim Annett DATE 7/20/88 CHECKED SC DATE 7/21/88

PROJECT PBAPS Units 2 & 3 JOB NO. 18247-106

SUBJECT Duct Support (Mod # 1729) SHEET NO. 76

Determine less conservative accelerations:

1. The support is anchored to 'J' wall which is a major structural wall.

2. For horizontal accelerations (especially N-S which is parallel to the wall) to determine the accelerations @ the elev. of the support @ 175'; interpolate between the El. 165' & 190' accelerations.

3. For vertical accelerations, to use 2/3 of the horizontal accelerations is very conservative. The Spec. G-14 requirements are based upon a middle with the nodes in the middle of a floor which is much less stiff vertically than 'J' wall. Since the support is located on 'J' wall, the duct is supported on the overhead/horizontal duct work close to this support & the vertical duct work is somewhat flexible due to the offsets, horizontal accelerations @ El. 135' will be used to determine the vertical accelerations on this support.

* doesn't govern

OBE		El. 135'	El. 165'	El. 190	El. 175'
@ .5%	NS	.8	*	2.42	
damping	EW	.63	*	2.55	
	vert.	*	*	*	
SSE/DBE	NS	.53x2.4=1.27	1.32x2.4=3.12	1.68x2.4=4.03	NS acc
@ 2%	EW	.37x2.4=*	*	1.4x2.4=3.36	
damping	vert.	1.27x2/3=.85 use	*		

NS acc. = (4.03-3.12) x (175'-165')/(190'-165') + 3.12 = 3.73 ← use

CALCULATION SHEET

BECHTEL

CALC. NO. G-106-2 REV. NO. 4

ORIGINATOR Jim Annett DATE 7/20/88 CHECKED SC DATE 7/21/88

PROJECT PBAPS Units 2 & 3 JOB NO. 18247-106

SUBJECT Duct Support (Mod #1729) SHEET NO. 77

Vertical Loads:

Let $M_{vertical} = \left(\frac{95^{\#}}{1000}\right)(.85+1)(23'') = 4.04$ "k

$P_{vertical} = .095k\ (1.85) = .18$ k

Horizontal Loads:

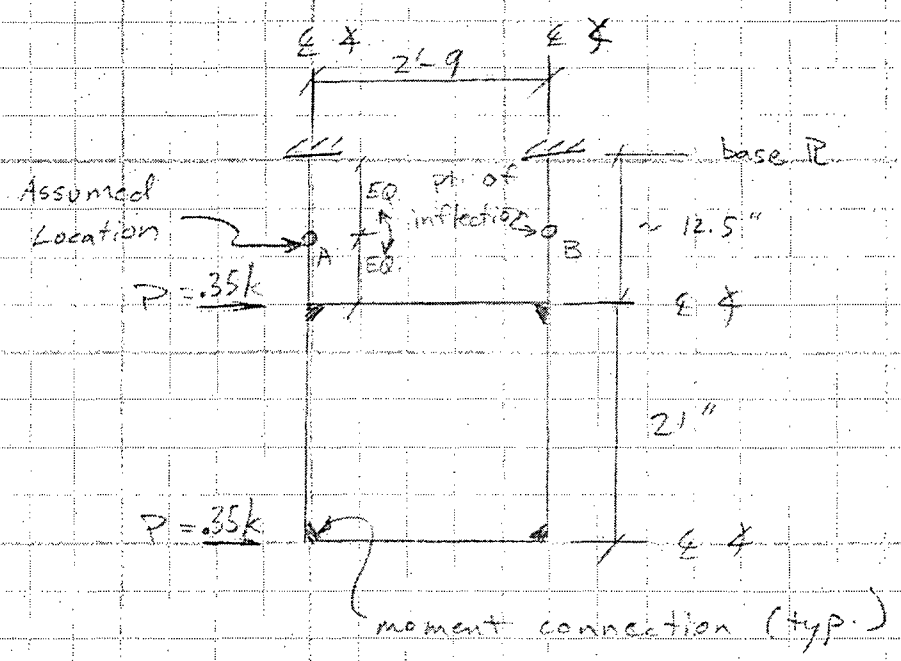

$P = .095k \times 3.73 = .35k$

Plan (Model of support for NS loadings)

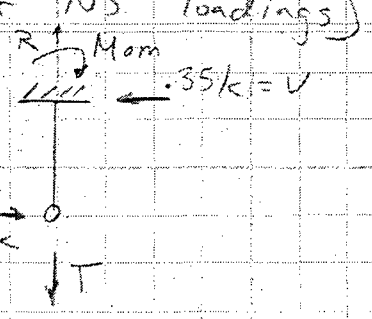

∴ @ each pt. of inflection -

SEP-20768 Rev. (6/76) ED-69 (5/7

CALCULATION SHEET

BECHTEL

CALC. NO. G-106-C REV. NO. 4

ORIGINATOR Jim Annett DATE 7/20/88 CHECKED SC DATE 7/21/88

PROJECT PBAPS Units 2 & 3 JOB NO. 18247-106

SUBJECT Duct Support (Mod #1729) SHEET NO. 79

Calc. T -

$\circlearrowleft + \Sigma M = 0 \ (@ \bar{B}) : -T(33'') + .35k(6.25'' + (21 + 6.25'')) = 0$

$\therefore T = .35k \left(\frac{33.5}{33}\right) = .36k$

$Mom = V \times 6.25'' = .35k(6.25'') = 2.19 \ ''k$

$R = T = .36k$

CALCULATION SHEET

BECHTEL

CALC. NO. G-106-2 REV. NO. 4

ORIGINATOR Jim Annett DATE 7/20/88 CHECKED SC DATE 7/21/88

PROJECT PBAPS Units 2 & 3 JOB NO. 18247-106

SUBJECT Duct Support (Mod #1729) SHEET NO. 79

Check welds @ moment connection:

(Note: vertical loads are negligible @ this connection)

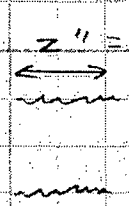

$A_w = 4''$

$$J_w = \frac{d(3b^2+d^2)}{6} = \frac{2(3\times3^2+2^2)}{6} = 10.33\ in^3$$

$c_w = 1.5''$ & $1''$

$$f_w = \sqrt{\left(\frac{V}{A_w} + \frac{M\times1.5''}{J_w}\right)^2 + \left(\frac{T}{A_w} + \frac{M\times1''}{J_w}\right)^2}$$

$$= \sqrt{\left(\frac{.35}{6} + \frac{2.19''k\cdot1.5''}{10.33\ in^3}\right)^2 + \left(\frac{.36}{6} + \frac{2.19\times1}{10.33}\right)^2} = .46\ k/in$$

$F_w = 3/16'' \times 18\ ksi = 3.38\ k/in > f_w \therefore$ OK

Check welds @ wall PCS:

$S_w(top) = \frac{4bd+d^2}{6} = 7.5$; $S_w(bottom) = 2.5\ in^2$ & 7.5 } see sht. 5

$A_w = 6''$

$$f_w = \sqrt{\left(\frac{R_{NS}}{A_w} + \frac{Mom_{NS}}{S_{w_{top}}} + \frac{Mom_{vert}}{S_{w_{bottom}}}\right)^2 + \left(\frac{P_{vert}}{A_w}\right)^2 + \left(\frac{V_{NS}}{A_w}\right)^2}$$

$$= \sqrt{\left(\frac{.36}{6} + \frac{2.19}{7.5} + \frac{4.04}{2.5}\right)^2 + \left(\frac{.18}{6}\right)^2 + \left(\frac{.35}{6}\right)^2} = 1.97\ k/in$$

$f_w < F_w$ for 3/16" fillet $\therefore$ OK

CALCULATION SHEET

BECHTEL

CALC. NO. G-106-2 REV. NO. 4

ORIGINATOR Jim Annett DATE 7/20/88 CHECKED _____ DATE _____

PROJECT PBAPS Units 2&3 JOB NO. 18247-106

SUBJECT Duct Support (Mod #1729) SHEET NO. 80

Check member:

1. OK for shear due to low load & by comparison to the weld calc. @ wall R.

2. Bending – Use values for 3x3x1/4 ∡
$A = 1.94 in^2$; $S = .577 in^3$

$$I_c = \frac{f_a}{F_a} + \frac{f_{b_1} + f_{b_2}}{F_b}$$

$$\frac{Kl}{r} = \frac{1 \times 12.5}{.592} = 21.1$$

$\Rightarrow F_a = 20 ksi$ – use

$$= \frac{\left(\frac{.35k}{1.94 in^2}\right)}{20} + \frac{\left(\frac{2.19'k + 4.04'k}{.577 in^3}\right)}{32.4}$$

$= .35 < 1 \therefore$ OK

$F_b = .9F_y = 32.4 ksi$

Note: the eccentricity of the loadings on the angle members has been ignored for simplicity. Since the interaction is low, the eccentricities will not affect the results.

CALCULATION SHEET

BECHTEL

CALC. NO. G-106-2 REV. NO. 4

ORIGINATOR Jim Annett DATE 7/20/88 CHECKED _____ DATE _____

PROJECT PBAPS Units 2 & 3 JOB NO. 18247-106

SUBJECT Duct Support (Mod #1724) SHEET NO. 81

Check anchor bolts:

Dimensions - conservatively use dim's which take into account any rotation of the ∡ 3x3½. However, assume the ∡ is centered.

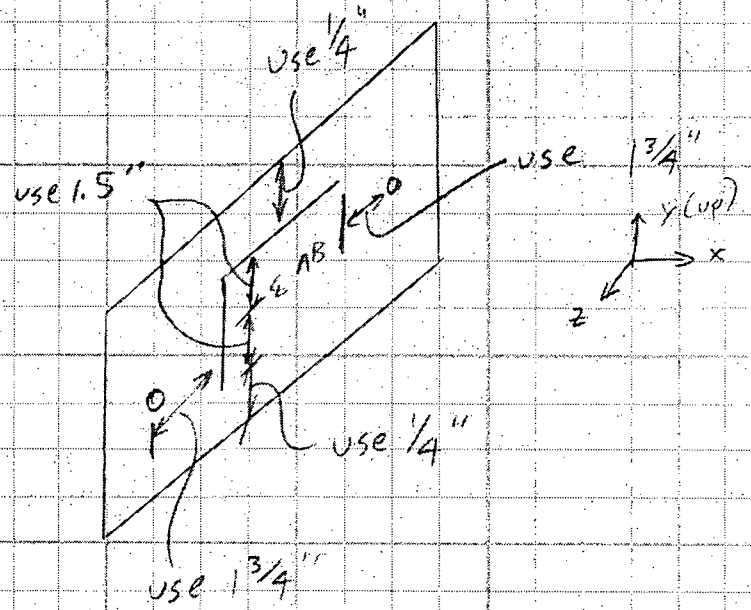

Note: dim's are based on using ½" Ø AB's, w/ 3/4" Ø AB's ⇒ larger dim's & lower loads on the anchors.

Load on each anchor bolt:

From vertical load:

$$F_x = \frac{M}{(2)\,1.5''} = \frac{4.04''k}{(2)\,1.5''} = 1.35\ k$$

$$F_y = \frac{.18\ k}{2} = .09\ k$$

From N-S load:

$$F_x = \frac{2.19''k}{(1''+3'')} + \frac{.35k}{2} = .72\ k$$

$$F_z = \frac{.35\ k}{2} = .18\ k$$

Totals: $F_x = 2.07\ k$; $F_y = .09k$; $F_z = .18k$

CALCULATION SHEET

BECHTEL

CALC. NO. G-106-2 REV. NO. 4

ORIGINATOR Jim Annett DATE 7/20/88 CHECKED SC DATE 7/21/88

PROJECT PBAPS Units 2&3 JOB NO. 18247-106

SUBJECT Duct Support (Mod #1729) SHEET NO. 82

Resultant shear = $\sqrt{F_y^2 + F_z^2}$ = .2 k

tension = F_x = 2.07 k

} Total resultant = 2.08 k

2. Rotate wall R 90° so that the long dimension is vertical :.

From vertical load:

$$F_x = \frac{4.04''k}{(1''+4'')} = 1.01\ k$$

$$F_y = .09k$$

From NS load:

$$F_x = \frac{2.19''k}{2(1.5)} + \frac{.35k}{2} = .91\ k$$

$$F_z = .18\ k$$

Totals: F_x = 1.92 k ; F_y = .09 k ; F_z = .18 k

Resultatant shear = .2k
Resultatant tension = 1.92 k
} Total resultant = 1.93k

⇒ Rotate wall R if possible & use 3/4" Ø A.B.'s @ 7 1/2" C-C (Capacity = 2.4k each)

CALCULATION SHEET

BECHTEL

CALC. NO. G-106-2 REV. NO. 4

ORIGINATOR Jim Annett DATE 7/20/88 CHECKED SC DATE 7/21/88

PROJECT PBAPS Units 2&3 JOB NO. 18247-106

SUBJECT Duct Support (Mod #1729) SHEET NO. 83

Check base PL -

$M_{vertical}$ is the only significant moment
$= 4.04''k$

$S_{PL} = \frac{4''(.5)^2}{6} = .17 \text{ in}^3$

$\therefore f_b = \frac{4.04''k}{.17 \text{ in}^3} = 24.24 \text{ ksi} < F_b = .9F_y = 32.4 \text{ ksi}$

$\therefore$ OK

Check North bracket:

1. Members - since no cantilevers involved, the other ✗ members are OK by comparison with the South bracket.

2. Welds - same rationale as above.

3. Anchor bolts - Moments will be very small $\therefore$ the 1/2"Ø anchor bolts are OK.

CALCULATION SHEET

BECHTEL

CALC. NO. G-106-2 REV. NO.

ORIGINATOR S. CASTORIANO DATE 7/28/88 CHECKED JHG DATE 7/28/88

PROJECT PBAPS UNITS 2 & 3 JOB NO. 11187-106

SUBJECT DUCT SUPPORT (MOD Nº 1729) SHEET NO. 8A

REFERENCE: ERR # P-5045

PROBLEM: LOWER LEFT-HAND BASEPLATE OF THE NEW SUPPORT NEEDS TO BE REDESIGNED DUE TO INTERFERENCE WITH EXISTING UNISTRUT

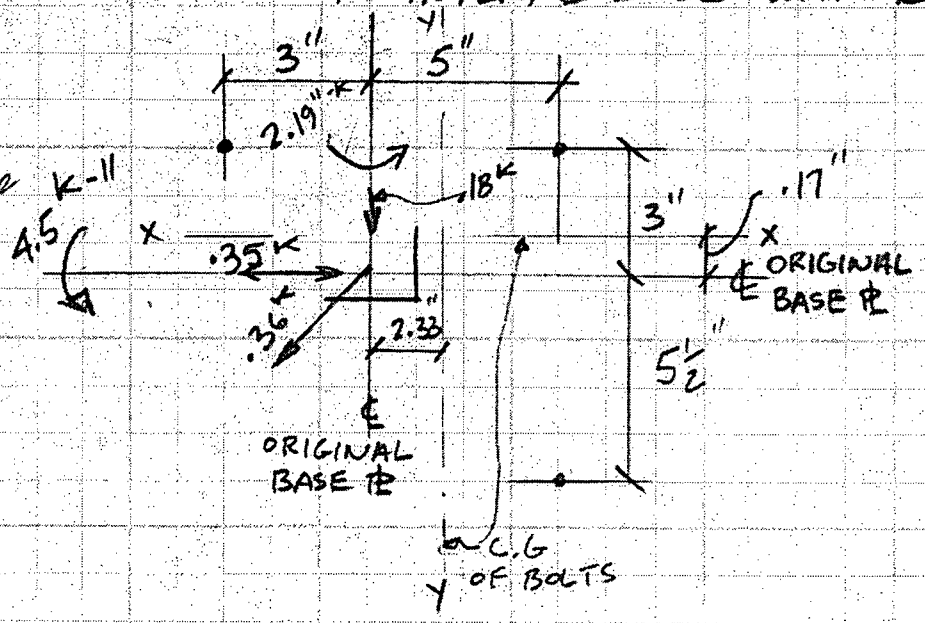

$x = 2(8-x)$

$3x = 16$

$x = \frac{16}{3}$ 5.33"

$y = 2(8.5 - y)$

$y = \frac{17}{3} = 5.67$

$I_{yy} = 1 \times 5.33^2 + 2 \times 2.67^2 = 42.67 \text{ in}^2$

$I_{xx} = 1 \times 5.67^2 + 2 \times 2.83^2 = 48.17 \text{ in}^2$

$I_J = 90.84 \text{ in}^2$

$M_{yy} = 2.19 + .36 \times 2.33 = 3.03^{k-"}$

$M_{xx} = 4.5^{k-"}$

Tension in bolt $= \frac{.36}{3} + \frac{3.03 \times 5.33}{42.67} + \frac{4.5 \times 2.83}{48.17} = 0.76^k$

Torsional Moment $= .35 \times .17 + .18 \times 2.33 = 0.48^{k-"}$

Torsional Shear $= \frac{.48 \times \sqrt{5.33^2 + 2.83^2}}{90.84} = 0.03$ (NEGLIGEABLE)

Shear$_{xx}$ $= \frac{.35}{3} = .12^k$ Shear$_{yy}$ $= \frac{.18}{3} = 0.06^k$ Result $= \sqrt{.76^2 + .12^2 + 0.06^2} = .77^k$

O.K FOR 3/4" Φ CEB