David H. Jones
Vice President
Engineering

Southern Nuclear
Operating Company, Inc.
40 Inverness Center Parkway
Birmingham, Alabama 35242

Tel 205.992.5984
Fax 205.992.0341

February 28, 2008

SOUTHERN COMPANY
Energy to Serve Your World℠

Docket Nos.: 50-348
50-364

NL-08-2173

U. S. Nuclear Regulatory Commission
ATTN: Document Control Desk
Washington, D. C. 20555-0001

Joseph M. Farley Nuclear Plant
Supplemental Response to NRC Generic Letter 2004-02

Ladies and Gentlemen:

The purpose of this submittal is to provide the Southern Nuclear Operating Company (SNC) supplemental response for Joseph M. Farley Nuclear Plant (FNP) Units 1 and 2, to Generic Letter (GL) 2004-02, dated September 13, 2004, "Potential Impact of Debris Blockage on Emergency Recirculation during Design Basis Accidents at Pressurized-Water Reactors." Enclosure 1 contains SNC response for FNP. The background section of Enclosure 1 provides details of the relative correspondence on this subject. Enclosure 2 contains a non-proprietary version of SNC response for FNP.

Enclosure 1 contains proprietary information as defined by 10 CFR 2.390. General Electric Hitachi Nuclear Energy (GEH), as the owner of the proprietary information, has executed the affidavit in Enclosure 3, which identifies that the enclosed proprietary information has been handled and classified as proprietary, is customarily held in confidence, and has been withheld from public disclosure. The proprietary information was provided to SNC in a GEH transmittal that is referenced by the affidavit. GEH hereby requests that the enclosed proprietary information be withheld from public disclosure in accordance with the provisions of 10 CFR 2.390 and 9.17.

Mr. D. H. Jones, states he is a Vice President of Southern Nuclear Operating Company, is authorized to execute this oath on behalf of Southern Nuclear Operating Company and to the best of his knowledge and belief, the facts set forth in this letter are true.

(Affirmation and signature are provided on the following page.)

The NRC commitments contained in this letter are provided as a table in Enclosure 4. If you have any questions, please advise.

Respectfully submitted,

SOUTHERN NUCLEAR OPERATING COMPANY

D. H. Jones
Vice President – Engineering

Sworn to and subscribed before me this 28th *day of* February, *2008.*

Gail A. Hicks
Notary Public

My commission expires: July 5, 2010

DHJ/CHM

Enclosure:
1. Farley Nuclear Plants Supplemental Response to GL 2004-02 (Proprietary)
2. Farley Nuclear Plants Supplemental Response to GL 2004-02 (Non-Proprietary)
3. General Electric Hitachi Nuclear Energy Americas LLC, Affidavit
4. Lists of Regulatory Commitments

cc: Southern Nuclear Operating Company
Mr. J. T. Gasser, Executive Vice President
Mr. J. R. Johnson, Vice President – Farley
Mr. L. M. Stinson, Vice President – Fleet Operations Support
RTYPE: CFA04.054; LC # 14680

U. S. Nuclear Regulatory Commission
Mr. Victor McCree, Acting Regional Administrator
Ms. K. R. Cotton, NRR Project Manager – Farley
Mr. E. L. Crowe, Senior Resident Inspector – Farley

Alabama Department of Public Health
Dr. D. E. Williamson, State Health Officer

Joseph M. Farley Nuclear Plant
Supplemental Response to NRC Generic Letter 2004-02

Enclosure 1

Farley Nuclear Plants Supplemental Response to GL 2004-02
(Proprietary)

Joseph M. Farley Nuclear Plant
Supplemental Response to NRC Generic Letter 2004-02

Enclosure 2

Farley Nuclear Plants Supplemental Response to GL 2004-02
(Non-Proprietary)

Joseph M. Farley Nuclear Plant
Supplemental Response to NRC Generic Letter 2004-02

Enclosure 2

Farley Nuclear Plants Supplemental Response to GL 2004-02
(Non-Proprietary)

Table of Contents

1.0 Overall Compliance
- 1.1 Overview of the FNP Resolution to GL 2004-02
- 1.2 Correspondence Background
- 1.3 General Plant System Description
- 1.4 General Description of New ECCS Strainers Installed
- 1.5 Size of New ECCS Strainers Installed

2.0 General Description and Schedule for Corrective Actions

3.0 Specific Information for Reviewed Areas
- 3.a Break Selection
- 3.b Debris Generation / Zone of Influence (ZOI)
- 3.c Debris Characteristics
- 3.d Latent Debris
- 3.e Debris Transport
- 3.f Head Loss and Vortexing
- 3.g Net Positive Suction Head (NPSH)
- 3.h Coating Evaluation
- 3.i Debris Source Term Refinements
- 3.j Screen Modification Package
- 3.k Sump Structural Analysis
- 3.l Upstream Effects
- 3.m Downstream Effects - Components and Systems
- 3.n Downstream Effects - Fuel and Vessel
- 3.o Chemical Effects
- 3.p Licensing Basis

4.0 References

Within this enclosure, Southern Nuclear Operating Company (SNC) is providing the response to the information requested by GL 2004-02 in accordance with the guidance provided in NRC letter dated November 21, 2007, Revised Content Guide for Generic Letter 2004-02 Supplemental Response, for Farley Nuclear Plant (FNP). Section 1.0 provides a general description of FNP as related to this GL. Section 2.0 provides a summary description of the approach used to address the GL. Section 3.0 provides specific information on the evaluations performed for FNP.

1.0 Overall Compliance

NRC Issue:

Provide information requested in GL 2004-02, "Requested Information." Item 2(a) regarding compliance with regulations. That is, provide confirmation that the [Emergency Core Cooling System (ECCS)] *ECCS and* [Containment Spray System (CSS)] *CSS recirculation functions under debris loading conditions are or will be in compliance with the regulatory requirements listed in the Applicable Regulatory Requirements section of this generic letter. This submittal should address the configuration of the plant that will exist once all modifications required for regulatory compliance have been made and this licensing basis has been updated to reflect the results of the analysis described above.*

SNC Response 1.0:

1.1 Overview of the FNP Resolution to GL 2004-02

In the resolution of General Safety Issue (GSI) GSI-191, "Assessment of Debris Accumulation on PWR Sump Performance," FNP implemented the following changes:

- FNP installed the largest sized strainers practicable for the space available within containment for each unit. The congested nature of the lower containment elevation resulted in the need for significant removal and relocation of structural steel and other equipment interferences. In addition the holes in the strainer surface were reduced to a nominally 3/32 inch from the 1/8 inch hole in the original strainers. Thus the potential for debris passing thru the strainer and causing plugging of the down stream ECCS equipment is minimized.

- To prevent the potential for plugging and creating a hold-up volume, the refueling cavity drain covers are removed during modes requiring ECCS operability. This assures that water which is routed into the refueling cavity will drain into the ECCS sump thus increasing sump level.

- Debris interceptors are installed inside containment for both Unit 1 and 2. No credit is taken in the analysis for the resulting reduced debris transport.

- For Unit 1, ECCS high head branch flow line orifices were installed and the associated throttle valves were changed to ensure that adequate clearance in the valve will prevent debris from plugging. These changes are to be made on Unit 2 in the fall of 2008 as documented in extension request approval issued by the NRC on August 29, 2007 (reference 15).

- Procedural and program controls are in place to ensure materials used in the containments will not result in an increase of the debris loading beyond the analyzed values. This includes controls for containment coatings, labels and insulation.

- Procedural changes have been made to ensure that the post Loss of Coolant Accident (LOCA) ECCS sump levels are maximized.

- Extensive analysis has been performed in accordance with NEI 04-07 (reference 2), the associated NRC Safety Evaluation (SE) (reference 3) along with other industry documents that were reviewed by the NRC. With few exceptions FNP followed this guidance. In the few cases that other approaches were utilized technical justification is available.

Some of the conservatisms in the FNP approach are discussed below:

- No credit for leak-before-break was taken in the FNP sump analysis scenario.

- CSS and Residual Heat Removal (RHR) strainer testing was performed using the most limiting strainer size for FNP. The limiting strainer for FNP is the CSS strainer. The RHR strainers are significantly larger and have lower hydraulic approach velocities. CSS strainer performance is required for a much shorter time frame than RHR strainers. In effect, more limiting conditions were tested than are needed for adequate sump performance.

- FNP does not credit containment pressure above pre-accident pressure for Net Positive Suction Head available (NPSHa) calculations.

- The only reliance upon "greater than atmospheric conditions," is to show that flashing across the ECCS strainers will not occur. By the nature of the RG 1.82 Rev. 3 (reference 4) approach which requires the containment pressure to be set to the vapor pressure of the containment sump fluid, along with the FNP physical arrangement, some limited credit for pressure above atmospheric is required to show that flashing across the strainer will not occur.

- To generate the total debris loading for the strainers, the debris quantity for the limiting break location that generated the most coatings debris is combined with the debris quantity from the one that generates the most insulation debris. In reality, these are two separate break locations that could not occur simultaneously. Thus the tested debris loading for the strainers is maximized.

- FNP assumed that all Service Level 1 coating failures in the ZOI were as chips. Since FNP is a very low fiber plant, this is more conservative than the assumption that the coating failed partially as particulates.

- A single pump failure is assumed for CSS and RHR such that all debris is assumed to accumulate on a single train of screens. This increases the quant of debris tested by a factor of two.

- The head loss associated with the RMI transported to the sump was treated as separate from the head loss associated with the other debris. This is considered conservative, as a mixed debris bed containing RMI would have a lower head loss.

- Near field effects were not used as a basis to reduce any debris source. To minimize the possibility of settling in the test tank, debris was homogeneously mixed and maintained in suspension in the test pool using a combination of return flow from the pump and mechanical agitators. In reality, it is expected that a large portion of the coating debris would not lift up onto the strainer surface.

- Non-qualified containment labels are assumed to all detach and transport to the containment sump. In reality, many of these labels are tightly adhered and many are protected from direct containment spray. Even in the event of detachment, many of these labels would not be transported to the sump strainers due to torturous paths between the label and the strainers. In addition, the amount of labels assumed in the strainer head loss tests was increased by a factor of two above the inventoried values. This additional area is intended to address any incidental debris that may be located in the containment.

- The containment sump level calculations were performed using maximum reduction in Refueling Water Storage Tank (RWST) mass due to instrument uncertainty. In addition, the switch over is assumed to occur instantaneously at the RWST alarm setpoints which has the effect of reducing calculated sump level. In reality, there is some time required for the operator to manually perform the swap over from injection to recirculation mode. Also, the reactor cavity was assumed to fill at a rate that disregards the slowing effect of a sealing steel plate separating the waste sump from the reactor cavity. In addition, for the long term sump level calculations, the Reactor Coolant System (RCS), along with the SG tubes, are assumed to refill due to cooling and condensation of the associated steam voids. A very detailed and conservative calculation is used to determine ECCS sump level.

- The latent debris value assumed for strainer hydraulic head loss testing corresponds to approximately an 86% higher value than was measured. In addition, the debris was assumed to be 15% fiber although the source of fiber in the FNP containment is very limited as FNP has mostly Reflective Metal Insulation (RMI) insulation except for a very limited quantity of fiber on SG instrument lines.

1.2 Correspondence Background

The following provides a condensed listing of the correspondences issued by the NRC or submitted by SNC for FNP, on the subject of GSI-191, "Assessment of Debris Accumulation on PWR Sump Performance," The title of each letter is provided in the reference section of this enclosure.

NRC issued Bulletin 2003-01 on June 9, 2003 (reference 38) asking for a 60 day response providing a description of any interim compensatory measures that have been implemented or that will be implemented to reduce the risk which may be associated with potentially degraded or nonconforming ECCS and CSS recirculation functions until an evaluation to determine compliance is complete. SNC provided a response in a letter dated August 7, 2003 (reference 39). Supplemental letters dated October 29, 2004 (reference 40), November 30, 2004 (reference 41) and July 22, 2005 (reference 42) were provided by SNC in response to requests for additional information. NRC letter dated December 14, 2005 (reference 43), stated that SNC had meet the intent of Bulletin 2003-01.

NRC issued Generic Letter (GL) 2004-02 on September 13, 2004 (reference 1). In this letter, the NRC asked for an initial 90 day response, a 12 month response and for the guidance of the GL to be met by December 31, 2007. In December 2004, NEI issued NEI 04-07 (reference 2) providing an evaluation methodology for the industry. The NRC letter dated December 6, 2004 (reference 3) provided the safety evaluation for NEI 04-07. The NRC had already issued RG 1.82 Rev 3 (reference 4) in November 2003.

SNC provided the initial response for FNP in a letter dated February 25, 2005 (reference 5). SNC provided a follow-up response on August 31, 2005 (reference 6) providing more details on how SNC would meet the GL guidance.

The NRC issued a request for additional information of February 9, 2006 (reference 7) with a 60 day response time. NEI worked with the NRC and recognized that much of the information needed to address the RAIs would not be available until ongoing testing activities were completed. The NRC issued letter dated March 28, 2006 (reference 10) identified that the RAI answers could be provided as part of the supplemental response by the end of December 2007. NRC letter dated January 4, 2007 (reference 12) provided clarification that even if a licensee had an extension for modifications past 2007, the supplemental response was still due by December 31, 2007.

SNC submitted an extension request in a letter dated July 3, 2007 (reference 13) for modification / installation of the Unit 2 ECCS throttle valves. This request was approved in NRC letter dated August 29, 2007 (reference 15).

NRC letter dated August 15, 2007 (reference 14), issued the content guide for GL 2004-02 supplemental response due in December 2007. Additional information was provided by the NRC in letter dated September 27, 2007 (reference 16) for chemical effects, protective coatings, and head loss testing. A revision to the content guide was issued by the NRC in letter dated November 21, 2007 (reference 19). The due date for the supplemental response was extended by NRC letter dated November 30, 2007 (reference 20) to allow the supplemental response to be submitted by February 29, 2008.

NRC letter dated November 8, 2007 (reference 17), provided guidance for requesting plant specific extensions. Additional information was provided in NRC letter dated November 13, 2007 (reference 18) on how GSI-191 would be closed and how the closure would be documented for each site.

SNC letter dated December 7, 2007 (reference 21), requested an extension for submittal of chemical effects testing results until April 30, 2008. This request was approved in NRC letter dated December 21, 2007 (reference 22).

1.3 General Plant System Description

FNP Units 1 and 2 are Westinghouse three loop Pressurized Water Reactor (PWR) design. The Residual Heat Removal System (RHR) (low head safety injection), Centrifugal Charging Pumps (CCP) (high head safety injection) and Containment Spray System (CSS) pumps are started following a Loss of Coolant Accident (LOCA). Initially, two RHR, two CCP and two CSS pumps take suction from the Refueling Water Storage Tank (RWST). When the RWST level reaches the low level set point, the RHR

pumps are manually stopped and are realigned to take suction from the post LOCA containment sump. Once the RHR switchover to recirculation is complete, the CVCS pumps take suction from the RHR pump discharge.

When the RWST level reaches low-low level, the CSS pumps are realigned to take suction from the containment sump. There are four independent suctions (two for RHR and two for CSS) located on elevation 105'-6" in the containment, the lowest floor elevation in the containment exclusive of the reactor cavity, and they are located outside the secondary shield wall.

The FNP Nuclear Steam Supply System is a three loop PWR. The system consists of one reactor vessel (RPV), three steam generators (SGs), three reactor coolant pumps (RCPs), one pressurizer (PZR) and the Reactor Coolant System (RCS) piping. The NSSS system is located inside a bio-shield and the reactor cavity. The area inside the bio-shield is mostly open at the lowest levels, with the exception of the reactor cavity and surrounding walls in the center, and a concrete wall between the A and C loops. The concrete wall between loops A and C has a walkway against the reactor cavity wall that allows an opening between loops A and C. The outer bio-shield walls extend from the containment base elevation of 105'-6" to El. 129'-0". There are areas of the bio-shield walls that are partially open; an inner wall extends from El. 105'-6" to 116'-3", and an outer wall extends down from El. 129'-0" to elevation 115'-3" at some locations. Above elevation 129'-0" smaller "vaults" or "coffins" surround each loop and the associated Steam Generator and Reactor Coolant Pump. These "vaults" further narrow around the Steam Generator at El. 155'-0" and extend up to El. 166'-6". There is also a separate "vault" for the Pressurizer that begins at El. 129'-0" and extends up to El. 181'-0".

1.4 General Description of New ECCS Strainers Installed

FNP contracted with General Electric Company (GE) to provide sump strainers that meet the requirements of GL 2004-02 (reference 1). GE provided FNP with seven horizontal stacked disk strainers (see Figure 3) and one vertical stacked disk strainer (see Figure 4). The strainers were installed in both Unit 1 and Unit 2. Unit 1 has the only vertical stacked strainer installed on the B-Train Containment Spray pump suction.

The strainers for FNP Unit 1 and Unit 2 are located outside the bio-wall between the bio-wall and containment outside wall (see Figures 1 and 2). This location protects the strainers from missile impacts.

1.5 Size of New ECCS Strainers Installed

For Unit 1, the passive strainer solution is shown in Figure 1. Each strainer assembly for both RHR strainers and CSS A-Train strainer consists of two modular horizontal stacked disk strainer sub-units

connected to the post LOCA pump suction through piping. The CSS B-Train strainer assembly consists of three modular vertical stacked disk strainer sub-units connected to a plenum that assists in directing flow to the post LOCA pump suction inlet located within the plenum boundary. The RHR strainer assembly, either A-Train or B-Train, is composed of two strainer sub-units per sump, each consisting of 22 stacked disks that are 40" X 40" and provide a total of approximately 878 ft² of perforated plate surface area. The CSS A-Train strainer assembly consists of one strainer sub-unit with (22) 40" X 40" stacked disks and the other with (10) 40" X 40" stacked disks, providing a total of approximately 638 ft² of perforated plate surface area. The CSS B-Train strainer assembly is composed of three strainer sub-units, each with (13) 30" X 30" vertical stacked disks, and provides a total of approximately 389 ft² of perforated plate surface area.

For Unit 2, the passive strainer solution is shown in Figure 2. Each strainer assembly for RHR and CSS consists of two modular horizontal stacked disk strainers connected to the sump through piping. The RHR strainer assemblies, both A-Train and B-Train, are composed of two strainers per sump, each consisting of 22 stacked disks that are 40" X 40" and provide a total of approximately 878 ft² of perforated plate surface area. The CSS A-Train strainer assembly consists of one strainer with (22) 40" X 40" stacked disks and the other with (10) 40" X 40 stacked disks, providing a total of approximately 638 ft² of perforated plate surface area. The CSS B-Train strainer assembly is composed of two strainers, one with (10) 40" X 40" stacked disks and the other with (22) 30" X 30" disks, and provides a total of approximately 433 ft² of perforated plate surface area.

Figure 1 – Farley Unit 1 Strainers Layout

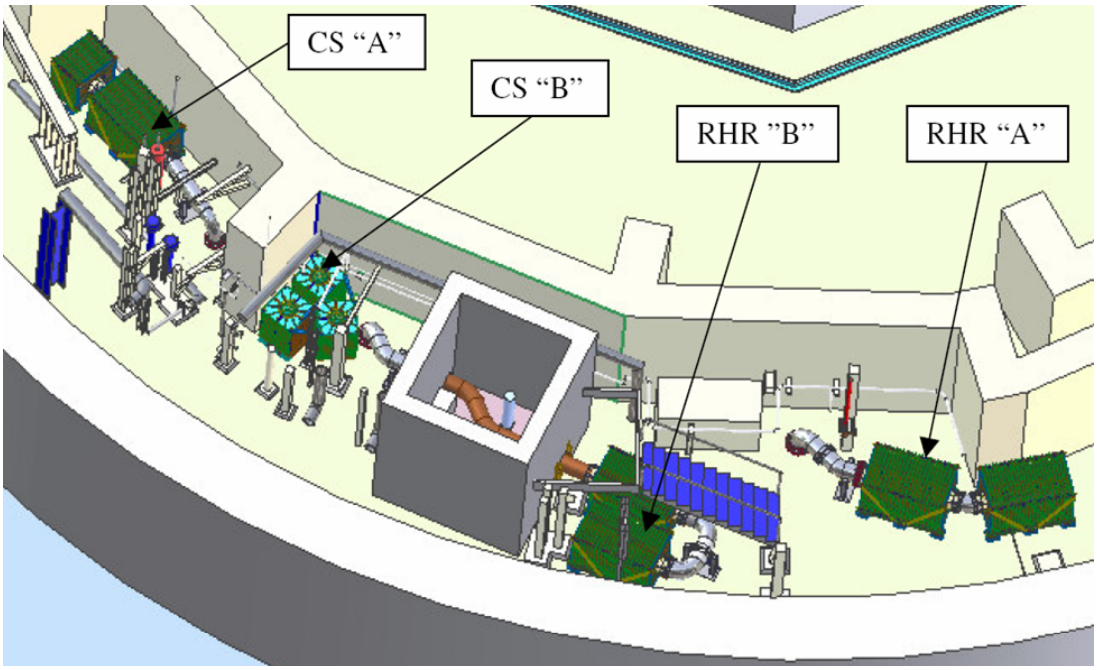

Figure 2 – Farley Unit 2 Strainers Layout

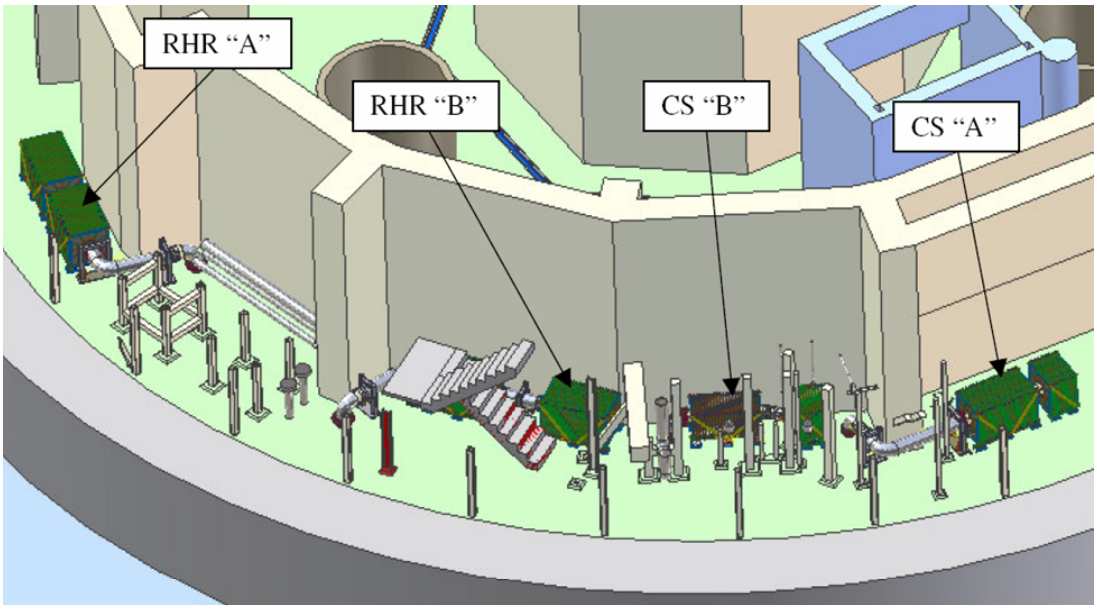

Figure 3 – Vertical Strainer Type

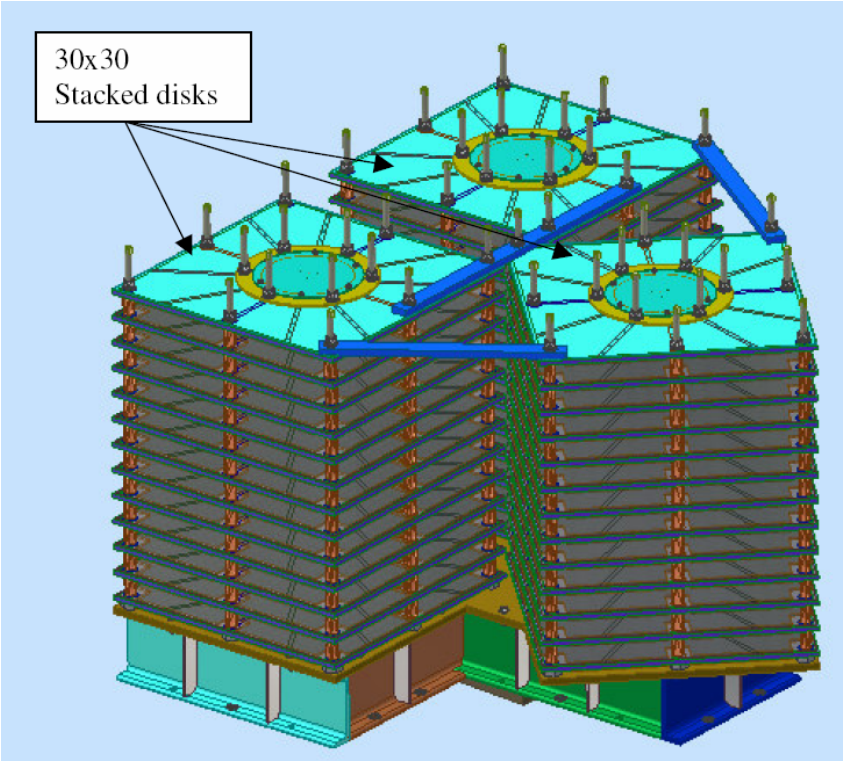

Figure 4 – Horizontal Strain Type

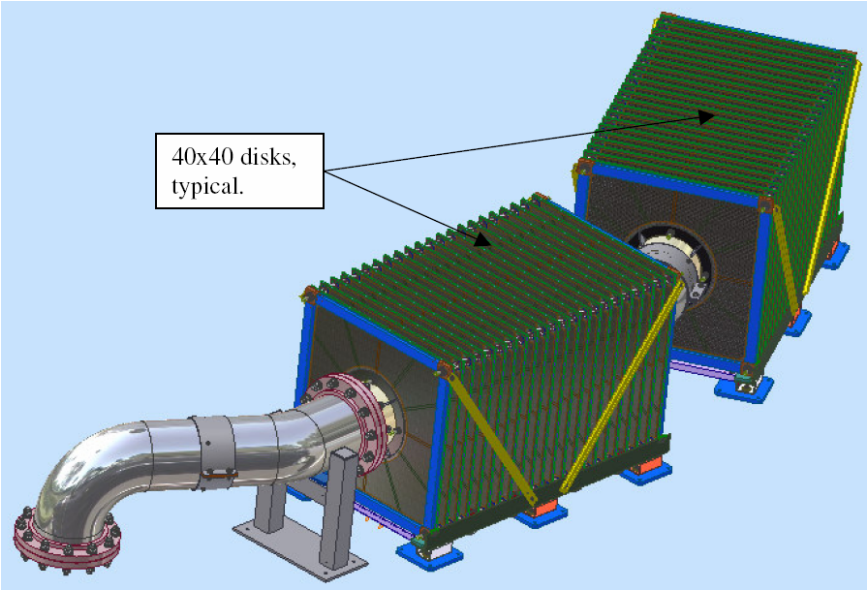

2.0 General Description and Schedule for Corrective Actions

NRC Issue:

Provide a general description of actions taken or planned, and dates for each. For actions planned beyond December 31, 2007, reference approved extension requests or explain how regulatory requirements will be met as per "Requested Information" Item 2(b). That is provide a general description of and implementation schedule for all corrective actions, including any plant modifications, that you identified while responding to this generic letter. Efforts to implement the identified actions should be initiated no later than the first refueling outage starting after April 1, 2006. All actions should be completed by December 31, 2007. Provide justification for not implementing the identified actions during the first refueling outage starting after April 1, 2006. If all corrective actions will not be completed by December 31, 2007, describe how the regulatory requirements discussed in the Applicable Regulatory Requirements section will be met until the corrective actions are completed.

SNC Response to 2.0:

SNC has performed an analyses to determine the susceptibility of the ECCS and CSS recirculation functions for FNP to the adverse effects of post-accident debris blockage and operation with debris-laden fluids. These analyses conform to the greatest extent practicable to the NEI 04-07 methodology (reference 2) as approved by the NRC safety evaluation report dated December 6, 2004 (reference 3). As of February 29, 2008, SNC has completed the following Generic Letter 2004-02 actions, analyses and modifications:

- NEI 02-01, "Condition Assessment Guidelines: Debris Sources Inside PWR Containment"
- Latent Debris Walkdowns
- Debris Generation Analysis
- Containment Debris Transport Analysis (includes Computational Fluid Dynamics)
- Head Loss Analysis
- Hydraulic Model of the ECCS System
- CSS and RHR Net Positive Suction Head Analysis
- Vendor's Strainer Head Loss Testing
- Bypass testing
- Downstream Wear and Blockage Analysis
- Chemical Effects Testing (Bench Top and Head Loss Testing)
- ECCS Throttle Valves Wear and Blockage evaluation
- Detailed Structural Analysis of New Strainers
- ECCS Sump Strainers Replacement Modification Installed
- ECCS Throttle Valves Modification Installed on FNP Unit 1.

SNC requested (reference 13) and received approval (reference 15) for an extension until Fall 2008 to complete the installation and testing of ECCS throttle valves.

SNC requested (reference 21) and received approval (reference 22) for an extension until April 30, 2008 to complete Chemical Effects testing and evaluation of the down stream effect on the fuel.

3.0 Specific Information for Reviewed Areas

3.a Break Selection

NRC Issue:

The objective of the break selection process is to identify the break size and location that present the greatest challenge to post-accident sump performance.

1) Describe and provide the basis for the break selection criteria used in the evaluation.

SNC Response 3.a.1:

SNC evaluated a number of break locations and piping systems, and considered breaks that rely on recirculation to mitigate the event. The following break location criteria were considered:

Break Criterion No. 1 - Breaks in the RCS with the largest potential for debris;

Break Criterion No. 2 - Large breaks with two or more different types of debris;

Break Criterion No. 3 - Breaks with the most direct path to the sump;

Break Criterion No. 4 - Large breaks with the largest potential particulate debris to insulation ratio by weight; and

Break Criterion No. 5 - Breaks that generate a "thin-bed" - high particulate with 1/8" fiber bed.

This spectrum of breaks is consistent with that recommended in the SE (reference 3) and is also consistent with regulatory position 1.3.2.3 of Regulatory Guide 1.82, Revision 3 (reference 4).

This review resulted in four breaks being investigated at FNP. Two of these breaks are located on the intermediate leg of the

primary piping, which has the largest diameter of the primary piping with a 31-inch inner diameter. One break is located on the cold leg of the primary piping, which has an inner diameter of 27.5-inches. The other break is located at the same place as the limiting intermediate leg break; however the break is analyzed in support of a potential alternate break analysis, therefore its postulated inner diameter is 11.19-inches.

2) State whether secondary line breaks were considered in the evaluation (e.g., main steam and feedwater lines) and briefly explain why or why not.

SNC Response 3.a.2:

SNC considered breaks in the primary coolant system piping having the potential for reliance on ECCS sump recirculation. The review determined that a primary coolant system piping large break loss of coolant accident (LBLOCA) and certain primary coolant system piping small break LOCAs (SBLOCAs) would require ECCS sump recirculation. SNC considered other high energy line breaks (e.g., secondary side breaks) and determined that sump operation was not required.

For small breaks, only piping that is 2 inches in diameter and larger was considered. This is consistent with the Section 3.3.4.1 of the SE, (reference 3), which states that breaks less than 2 inches in diameter need not be considered. Section 3.3.5 of the SE describes a systematic licensee approach to the break selection process which includes beginning the evaluation at an initial location along a pipe and stepping along in equal increments (5 foot increments per the SE) considering breaks at each sequential location. However, due to the size of the ZOI applied in the analyses, and the consequent volume of debris generated, it was not necessary to evaluate 5-ft increments.

3) Discuss the basis for reaching the conclusion that the break size(s) and locations chosen present the greatest challenge to post-accident sump performance.

SNC Response 3.a.3:

The locations of the analyzed breaks are chosen in order to maximize the amount and types of debris generated. To this end, breaks are placed near large equipment, specifically the steam generators and pressurizer, and also near walls and the floor. Finally, breaks are located in areas expected to maximize the transport of debris to the sump strainers. Since the majority of insulation inside the FNP containment is Reflective Metal Insulation (RMI), the break selection process is simplified.

Breaks are also selected to maximize the amount of coating debris generated. Since the break locations which maximize the generation of insulation debris are not necessarily the same locations that maximize coating debris generation, different break locations are considered for qualified coatings. This is discussed in more detail in the Coatings section of this response.

The piping runs considered for breaks are the RCS hot legs, the RCS cold legs, RCS interim legs, and all RCS attached energized piping. Breaks in these lines could decrease RCS inventory and result in the ECCS and/or CSS operating in recirculation mode, in which the system pumps would take suction from the containment sumps.

The majority of the insulation inside the FNP containment is either RMI or Transco RMI. The Transco RMI is located on the Steam Generators and small sections of the attached piping. The remainder of insulation is Mirror RMI. There is also a small amount of Tempmat fiber located on the steam generator instrumentation reference legs and very small sections of the reactor vessel bottom head insulation assembly. In addition, there is a large amount of closed cell foam type (Armaflex) insulation located on the chilled water lines (Service Water and Component Cooling Water). However, the Armaflex insulation has a very low density and will float if dislodged (even if reduced to particles) and not add to the debris mixture on the sump strainers which are 100% submerged during recirculation.

The largest energized lines in containment that require evaluation are the hot legs (29-inch ID), the interim leg (31-inch ID), the cold leg (27-1/2-inch ID), the pressurizer surge line (14-inch nominal), RHR recirculation line to the hot leg (12-inch nominal diameter) and safety injection to the cold leg (12-inch nominal diameter). The other piping lines have a much smaller diameter.

Since the RHR recirculation lines and the safety injection lines are located within the bio-shield enclosure and are of smaller diameter than the RCS piping, these line breaks would be bounded by the reactor coolant loop breaks and thus are not analyzed. This is based on the relative small size of the area within the bio-shield enclosure, the area within the bio-shield is not divided thus the ZOIs for each break overlap, and the other energized lines are over twice the size of the RHR lines which results in the RHR ZOIs being significantly smaller that the larger lines. Therefore, this leaves breaks in the hot legs, the cold legs, interim legs and the pressurizer surge line for consideration.

The interim leg is the largest line (31-inch ID) within the bio-shield enclosure and would produce the largest ZOI. Placing a break on the interim leg, on the same loop as the pressurizer surge line

(loop B), potentially captures the most insulation debris. An interim leg break in loop C is also considered since it will create a large amount of debris and is the bounding location for coating debris. A cold leg break on loop A near RCP discharge is also considered since it can generate a large amount debris from both loops A and B.

A hot leg or cold leg line break at the Reactor Pressure Vessel (RPV) is also considered. This break would affect the reactor insulation and the insulation on the RCS lines adjacent to the break, up to the penetrations. However, this debris would fall to the bottom of the reactor vessel cavity, but would be in a stagnant pool and will not transport to the sump. The amount of debris would also be bounded by a hot or cold line break elsewhere on the line. Therefore, a hot leg or cold leg break at the RPV is not analyzed.

The postulated break locations are as follows:

S1. The Loop C Interim Leg near the base of the steam generator at El. 118'-0" [31-inch ID]
S2. The Loop B Interim Leg near the base of the steam generator at El. 118'-0" [31-inch ID]
S3. The Loop A Cold Leg near the RCP discharge at El. 122'-9" [27.5-inch ID]

Alternate Methodology

For the alternate methodology, the selection of the break size and location in Region I is much simpler. The break size for Region I under the alternate break evaluation is defined as either:

- A complete guillotine break of the largest line connected to the RCS piping (14-inch pressurizer surge line)

OR

- A main loop line break equivalent to a guillotine break of a 14-inch Schedule 160 pipe

After performing several iterations, the S2 break has been found to generate the greatest quantity of debris. For the break S4, according to the methodology, a 14-inch Schedule 160 (11.19 inch inside diameter) double-ended guillotine break is modeled on the Loop B interim leg at the same location as the S2 break.

For Region II of the alternate methodology, the debris quantities are the same as for the deterministic methodology. The alternate break location was determined to be bounded by other break locations and was not used in determining debris generation. Below is a summary of the postulated break locations.

Break Summary

Postulated Break Locations

Break Name	Break ID	Elevation	Piping
S1	31-inch	118'-0"	Interim Leg – Loop C
S2*	31-inch	118'-0"	Interim Leg – Loop B
S3	27.5-inch	122-9"	Cold Leg – Loop A
S4	11.19-inch	118'-0"	Alternate Break (Interim Leg –Loop B)

*Limiting break location

Postulated Break Locations

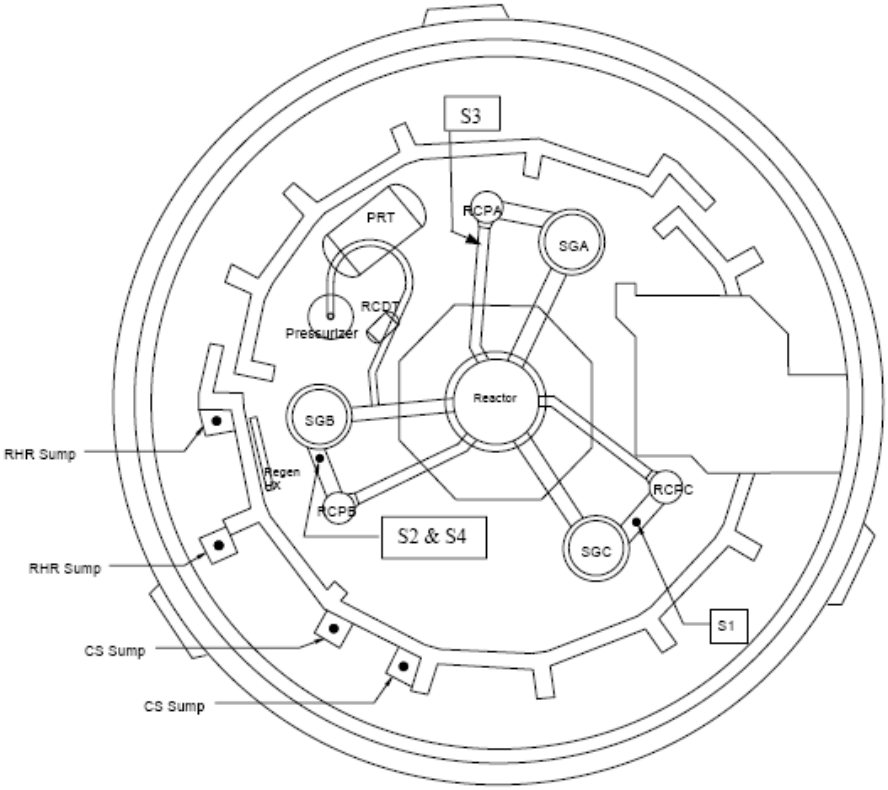

3.b Debris Generation / Zone of Influence (ZOI)

NRC Issue:

The objective of the debris generation/ZOI process is to determine, for each postulated break location: (1) the zone within which the break jet forces would be sufficient to damage materials and create debris; and (2) the amount of debris generated by the break jet forces.

1) Describe the methodology used to determine the ZOIs for generating debris. Identify which debris analyses used approved methodology

default values. For debris with ZOIs not defined in the guidance report (GR)/safety evaluation (SE), or if using other than default values, discuss method(s) used to determine ZOI and the basis for each.

SNC Response 3.b.1:

The insulation in containment at FNP consists of Transco RMI, Mirror RMI and Temp-Mat Fiber. There is a very small amount of Temp-Mat Fiber within containment (less than 1 ft^3). Due to its location, some of it is not considered a plausible debris target. However, 1 ft^3 of Temp-Mat Fiber debris is conservatively assigned to all breaks. For Transco and Mirror RMI, the amount of debris generated is dependent on the proximity of each insulated target to the postulated break. The SE (reference 3) recommends a ZOI radius of 2.0D ("D" being the inside diameter of the pipe break) for Transco RMI and 28.6D for Mirror RMI. These ZOI values have been used for the FNP debris generation analysis.

In order to perform the calculation of RMI debris generation within containment, an inventory of the insulation location and area is utilized. Except for a small amount of Temp-Mat insulation, which is conservatively considered debris and applied to all breaks, all insulation in the FNP containment is RMI. The inventory exists in a Microsoft Excel® spreadsheet. A column of the base spreadsheet is modified for each break by the user; the column determines whether the insulation in that row is counted among the debris or not. This value (Insulation Factor) is between 0 and 1 and is the factor the total insulation in that row is multiplied by, before summing the total debris generated. The value input by the user is dependent on the type of RMI debris for each target and its proximity to the break location under investigation. In this way, debris sources near a break may be counted, or partially counted, while sources far away can be discounted from the debris total.

As discussed in Section 3d of this response, latent debris and miscellaneous (foreign) materials are also included in the debris generation analysis. The amounts of these types of debris are determined from plant walkdowns and are presented in their respective section of this response.

2) Provide destruction ZOIs and the basis for the ZOIs for each applicable debris constituent.

SNC Response 3.b.2:

Debris Constituent	ZOI	Basis
Transco RMI	2.0D	NRC SE
Mirror RMI	28.6D	NRC SE
Temp-Mat Fiber	NA	All assumed as debris in analysis
Qualified Coatings	4.0D	WCAP-16568-P (reference 25)
Unqualified Coatings	NA	NRC SE – All assumed as debris in analysis
Latent Debris	NA	NRC SE – Conservative value based on plant walkdown
Foreign Materials	NA	NRC SE – Conservative value based on plant walkdown

3) Identify if destruction testing was conducted to determine ZOIs. If such testing has not been previously submitted to the NRC for review or information, describe the test procedure and results with reference to the test report(s).

SNC Response 3.b.3:

Coatings on steel, concrete and equipment in containment were evaluated. Qualified coatings are evaluated for a 4.0D ZOI based upon the results of testing presented in WCAP-16568-P (reference 25). Unqualified coatings are all considered to be debris consistent with NEI 04-07 and its associated SE (references 2 and 3). Further discussion of coatings is contained in Section 3h of this response.

4) Provide the quantity of each debris type generated for each break location evaluated. If more than four break locations were evaluated, provide data only for the four most limiting locations.

SNC Response 3.b.4:

The insulation and coating debris totals for all four breaks evaluated are presented in the tables below. Break S2, on the

Intermediate Leg of Loop B, is clearly the limiting break for insulation debris. Break S2 is located on the steam generator side of the intermediate leg. The limiting break for coatings evaluated for a 4.0D ZOI is also on the Intermediate Leg of Loop B, but at the RCP side of the pipe. Therefore, in order to conservatively maximize the debris available for transport, the maximum insulation debris location (Break S2) is combined with the maximum coating debris location.

Table 3b-1: Summary of LOCA Generated Insulation Debris Inside ZOI

Break ID	Location	Transco RMI Foils (ft^2)	Mirror RMI Foils (ft^2)	RMI Jacketing (ft^2)	Temp-Mat (ft^3)
S1	Loop C Interim Leg	2054	25527	5795	1
S2	Loop B Interim Leg	2383	35714	8022	1
S3	Loop A Cold Leg	0	34368	7522	1
S4 (alternate)	Loop B Interim Leg	1226	23258	5223	0

Table 3b-2: Qualified Coating Debris Based on ZOI = 4D

Break	Coating Areas (ft^2)		Coating Volumes (ft^3)	
	Concrete	Steel	Concrete	Steel
Interim Leg at SG	200	1332	0.31	1.66
Interim Leg at Mid-span	218	1320	0.34	1.65
Interim Leg at RCP	523	1091	0.81	1.36
Hot Leg at Primary Wall	294	758	0.46	0.95
Hot Leg at SG	0	1196	0	1.49

5) Provide total surface area of all signs, placards, tags, tape, and similar miscellaneous materials in containment.

SNC Response 3.b.5:

Labels, tags, stickers, placards and other miscellaneous or foreign materials were also evaluated via walkdown. As with latent debris, a foreign material walkdown was only performed for Unit 2. The walkdown determines that 36.4 ft^2 of foreign materials are present

in FNP Unit 2. A subsequent walkdown determined that this value bounds Unit 1. An amount equal to twice this value was assumed for strainer sacrificial area.

3.c Debris Characteristics

NRC Issue:

The objective of the debris characteristics determination process is to establish a conservative debris characteristics profile for use in determining the transportability of debris and its contribution to head loss.

The debris sources at FNP include insulation, coating, foreign material and latent debris. The insulation debris includes a small amount of fiber (Temp-Mat) and larger amounts of both Mirror and Transco stainless steel reflective metallic insulation. The characteristics of the insulation debris material are discussed in this section and the characteristics of the other debris types (e.g. coatings, foreign and latent materials) are included in their respective sections of this response submittal (Sections 3.h and 3.d).

1) Provide the assumed size distribution for each type of debris.

SNC Response 3.c.1:

Temp-Mat - Temp-Mat insulation is investigated by the Air Jet Impact Tests (AJITs), which are presented in CDI Report 96-06 (reference 26). The relevant information from the AJITs report is also included in various references, including the NRC Safety Evaluation of the NEI Guidance (SER, reference 3). Appendix II of the SER, particularly Figure II-4, provides information which could be used to refine the size distribution of Temp-Mat debris. However, because the Temp-Mat insulation targets are in close proximity to the postulated breaks at FNP and a relatively small quantity of Temp-Mat debris is generated, all of the Temp-Mat debris is conservatively treated as fines. Per the NEI Guidance and Figure 3-7 of NUREG/CR-6808 (reference 27) fines and small pieces are comprised of all debris less than 4 inches square. Fines are considered 100% transportable.

Transco RMI - Consistent with Section 3.4.3.3.2 of the NEI Guidance (reference 2), Transco RMI is modeled as 75% fines and small pieces and 25% large pieces. This distribution is confirmed by Table 3-3 of the SE (reference 3). Figure 3-7 of NUREG/CR-6808 reports the size distribution from an NRC sponsored test in which a Mirror RMI cassette was subjected to a high pressure two phase jet of water and steam. The figure breaks the size distribution into smaller categories, which could be used to further refine the Mirror RMI distribution. However, because the test was conducted on Mirror RMI, these categories

are not directly applicable to Transco RMI; therefore, the 75% / 25% put forth by the NEI Guidance and the SE split has been used. Fines and small pieces that enter the active recirculation pool are considered 100% transportable. Large pieces are transported based on velocity data found in various references; specifics of debris transport are discussed in Section 3e.

Mirror RMI - The size distribution for Mirror RMI debris is also consistent with Section 3.4.3.3.2 of the NEI Guidance and based on Figure 3-7 of NUREG/CR-6808. Since the figure was generated from data obtained from a test of Mirror RMI (as discussed previously), refinement of the Mirror debris size distribution based on this data is possible. The size distribution presented in the figure is approximately 5% fines (1/4-inch and smaller) 70% small pieces (1/4-inch to 4-inch) and 25% large pieces (4-inch and larger). The debris sample from this test is typical of the debris from cassettes nearest the modeled break. Using the size distribution for a cassette nearest the break for the entire Mirror RMI ZOI is conservative. Fines that enter the active recirculation pool are considered 100% transportable. Small and large pieces are transported based on velocity data found in various references; specifics of debris transport are discussed elsewhere.

2) Provide bulk densities (i.e., including voids between the fibers/particles) and material densities (i.e., the density of the microscopic fibers/particles themselves) for fibrous and particulate debris.

SNC Response 3.c.2:

Temp-Mat - Per Table 3-2 of the NEI Guidance (reference 2) the bulk density of Temp-Mat insulation is 11.8 lbm/ft^3 and the material density of the individual fibers is 162 lbm/ft^3. The bulk density of the Temp-Mat insulation installed at FNP is 11.8 lbm/ft^3. This compares to a bulk density of 11.8 lbm/ft^3 which was used for sump strainer performance testing.

Reflective Metal Insulation - Transco and Mirror RMI are comprised of thin layers of stainless steel foil. Stainless steel has a density of 490 lbm/ft^3.

Below is a table showing the density information for the installed material at FNP and the material used in testing for each.

Table 3.c.2 – 1 Debris Densities

Plant Debris	Test Material	As-Fabricated Density (lbm/ft^3)	Material Density (lbm/ft^3)
TempMat Fiber	TempMat Fiber	11.8	162
Latent Fiber	Transco Fiber	2.4	159
Qualified Coating	Ameron 90HS	94.0	94.0
Latent Particulate	Silicon Carbide	94.0	200
Unqualified Coating	Ameron 90HS	94.0	94.0
Unqualified Coating	Silicon Carbide	94.0	200

3) Provide assumed specific surface areas for fibrous and particulate debris.

SNC Response 3.c.3:

The specific surface area (S_v) is only used for preliminary analytically determined head loss values across a debris laden sump strainer using the correlation given in NUREG/CR-6224. Since the head loss across the installed sump strainer is determined via testing, these values are not used in the design basis for FNP. Therefore, these values are not provided as part of this response.

4) Provide the technical basis for any debris characterization assumptions that deviate from NRC-approved guidance.

SNC Response 3.c.4:

No deviations were taken from the NRC approved guidance for debris characterization.

3.d Latent Debris

NRC Issue:

The objective of the latent debris evaluation process is to provide a reasonable approximation of the amount and types of latent debris existing within the containment and its potential impact on sump screen head loss.

1) Provide the methodology used to estimate quantity and composition of latent debris.

SNC Response 3.d.1:

Latent debris has been evaluated by containment walkdown as recommended by Section 3.5.2 of the NEI Guidance (reference 2) and confirmed by the NRC SE (reference 3). A walkdown of the FNP Unit 2 containment was conducted during refueling outage 2R17 per the walkdown plan for evaluating latent debris. The walkdown plan conforms to the guidance provided in NEI 02-01 (reference 28). Additional rigor was leant to the evaluation by increasing the sample size from that recommended by the NEI guidance; NEI 02-01 (reference 28) recommends a minimum of three (3) samples of each of twelve (12) surface types, the walkdown plan required a minimum of four (4) samples. These additional samples increase the statistical accuracy of the evaluation. A listing of the number of each sample type follows.

Number of Samples Collected

- Liner 4
- Equipment (Horizontal) ... 4
- Equipment (Vertical) 4
- Floor 4
- Wall 4
- HVAC Duct (Horizontal) .. 4
- HVAC Duct (Vertical) 4
- Pipe (Horizontal) 4
- Pipe (Vertical) 4
- Cable Tray (Horizontal)..... 4
- Cable Tray (Vertical) 4
- Grating 4

2) Provide the basis for assumptions used in the evaluation.

SNC Response 3.d.2:

The mass of the samples collected are used to determine the latent debris mass distribution (g/ft^2). The measurement of sample mass is accurate to 0.01 grams. A statistical analysis of the samples is performed in the post-processing of the latent debris walkdown results, which is Attachment 8.12 of the FNP Debris Generation and Transport calculation. The analysis determines a 90% confidence limit of the mean value for each type of surface based on a normal distribution. The upper limit of the mean value for each surface type is then applied over the entire surface area of that type throughout containment. This analysis lends further confidence and conservatism to the latent debris mass determination.

Three of the collected samples are not used in the statistical analysis. Two of these samples measured no gain or a loss of mass, though both of these anomalies were within the accuracy of the scale (0.01 grams) and both are conservatively adjusted to a

latent debris mass of 0.01 grams. One other measurement was judged to be an outlier due to its inclusion of foreign materials. This measurement was excluded and the next highest measurement of that surface type is included twice.

3) Provide results of the latent debris evaluation, including amount of latent debris types and physical data for latent debris as requested for other debris under c. above.

SNC Response 3.d.3:

A walkdown of Unit 2 was performed to determine inputs for the latent debris calculation. A value of 125 lb_m was conservatively calculated. A visual inspection of Unit 1, as expected, indicated similar conditions. A comparison of Units 1 and 2 is presented in Section 5.6 of the Debris Generation and Transport calculation, which indicates the two units are very similar. The general arrangement of the two units does not differ, the concrete layout and equipment locations are very similar and the primary piping, insulation types and thicknesses and primary equipment steel are the same between the units. Given that the units are physically very similar and that they are subject to the same house-keeping and close-out procedures, it is expected that their latent debris totals will be very similar also. However, additional margin is gained by using the expected maximum latent debris value (200 lb_m per Section 3.5.2.2 of NEI 04-07, (reference 2) for all subsequent evaluations.

Consistent with the NRC SE of the NEI Guidance (reference 3), 15% of the latent debris load (by mass) is assumed to be fibrous debris and the other 85% (by mass) is treated as particulate debris. Likewise, consistent with the SE (reference 3), densities of 2.4 lb_m/ft^3 (bulk density) for fibrous debris and 2.7 g/cm^3 for particulate debris are used. As the specific surface area of debris is only relevant for head-loss calculations per NUREG/CR-6224 (reference 29) and head-loss evaluations are now being conducted experimentally, the specific surface area of latent debris is not determined.

A walkdown of Unit 2 was performed to determine inputs for the latent debris calculation. Labels, tags, stickers, placards and other miscellaneous or foreign materials were evaluated. A visual inspection of Unit 1, as expected, indicated similar conditions with significantly fewer nonqualified labels than Unit 2. The walkdown plan and results are included as Attachment 8.13 of the FNP Debris Generation and Transport calculation.

Table 3d-1: Latent and Foreign Material Debris used in Analysis

Latent Debris Total	(lb_m)	200
Fiber	(lb_m)	30
Particulate	(lb_m)	170
Foreign Material Debris	(ft^2)	36.4

4) Provide amount of sacrificial strainer surface area allotted to miscellaneous latent debris.

SNC Response 3.d.4:

The strainers' sacrificial area for label blockage was modeled as 31.13 ft^2 for RHR and 23.52 ft^2 for CSS. This is based on a total of 72.86 ft^2 (10,493 in^2) of labels and tags. During walkdowns of Containment (CTMT) SNC identified the quantity of unqualified debris and labels inside CTMT as half this amount. This value was doubled to provide additional conservatism and thus extra margin for the possible interdiction of incidental debris into CTMT. The labels are modeled with 100 % transport to the sump strainer with 50 % overlapped. This is equivalent to 75 % of the original single sided surface area. This is consistent with NRC SE section 3.5.2.2.2 (reference 3)

3.e Debris Transport

NRC Issue:

The objective of the debris transport evaluation process is to estimate the fraction of debris that would be transported from debris sources within containment to the sump suction strainers.

1) Describe the methodology used to analyze debris transport during the blowdown, washdown, pool fill-up, and recirculation phases of an accident.

SNC Response 3.e.1:

The debris transport analysis for FNP is conducted in accordance with both the NEI Guidance provided in (reference 2) and the NRC SE of the NEI Guidance provided in (reference 3). The transport analysis for FNP does not deviate from the approved NRC methodology. As such, each phase of post-LOCA transport is considered: blowdown, washdown, pool fill-up and recirculation. A

detailed discussion of each transport phase, including information on their effect on overall transport for FNP follows.

Blowdown

Section 3.6.3 of the NEI Guidance (reference 2) states that 25% of fine and small debris generated within the break ZOI will be ejected upwards in a highly compartmentalized containment such as the containment at FNP. The SE confirms that this is a conservative approach (reference 3). Both the NEI Guidance and the SE (references 2 and 3) state that large debris falls directly to the floor. Therefore, during blowdown 25% of the small and fine RMI debris are considered to transport to the upper containment. Conservatively, qualified coatings, which are also generated from within the break ZOI, are considered to fall directly to the floor. All other debris types, including unqualified coatings, latent and foreign material debris and Temp-Mat insulation are generated from outside the break ZOI and are therefore considered to fall directly to the floor.

Washdown

As stated previously, the only debris that is considered to transport to upper containment during blowdown is small and fine RMI debris. Therefore, washdown is only considered for the transport of small and fine RMI debris. The NEI Guidance (reference 2) and the SE (reference 3) both state that RMI debris blown into upper containment during blowdown is not subject to transport during washdown due to relatively shallow pool depth and low water velocities. In accordance with this guidance, all RMI blown into upper containment is expected to remain there.

Pool Fill-up

Conservatively, no inactive pools are credited at FNP. Therefore, pool fill-up is inconsequential. All debris on the floor prior to pool fill-up remains on the floor after pool fill-up and is considered for transport by pool recirculation.

Recirculation

Debris that reaches the containment pool is subject to transport by the pool flow present during recirculation. In accordance with the NEI guidance and NRC SE documents (references 2 and 3) all fine debris that lands in the pool is considered to transport entirely to the sump strainer. The transport of small and large pieces of debris during

recirculation is dependent on the velocities present in the containment pool.

To assist in the determination of recirculation transport fractions, several Computational Fluid Dynamics (CFD) simulations were performed using Fluent™, a commercially available software package. Minimum and maximum flood heights are investigated by the CFD simulations and other variables are evaluated to ensure a conservative representation of the post-LOCA containment sump flow velocities. Of the nine simulations conducted, two are representative of the final strainer system design and include recent modifications to containment; these are utilized to determine the transport fractions of debris. The results of the simulations include velocity contour plots, velocity range percentages, turbulent kinetic energy (TKE) values and total kinetic energy values. These results are combined with information in the GSI-191 literature to determine the overall transport fractions for RMI debris.

2) Provide the technical basis for assumptions and methods used in the analysis that deviate from the approved guidance.

SNC Response 3.e.2:

The transport analysis for FNP does not deviate from the approved NRC methodology.

3) Identify any computational fluid dynamics codes used to compute debris transport fractions during recirculation and summarize the methodology, modeling assumptions, and results.

SNC Response 3.e.3:

RMI debris transport is investigated in NUREG/CR-3616 (reference 30) and NUREG/CR-6772 (reference 31). Transport velocities pertinent to RMI debris transport at FNP are taken from these documents. Both documents report values at which some debris begins to move and at which a majority begins to move. These are referred to herein as the "incipient tumbling" and "bulk transport" velocities. Conservatively, the incipient tumbling velocity is used to determine transport potential. Accordingly, small RMI pieces are considered to transport at velocities of 0.28 ft/s or greater and large pieces are considered to transport at velocities of 0.20 ft/s or greater. RMI jacketing is not expected to transport at velocities below 0.7 ft/s, per the NEI Guidance (reference 2). Velocity contours from the CFD simulations are not available for flow above 0.6 ft/s. Therefore a transport velocity of 0.6 ft/s is conservatively used for RMI jacketing debris. A single potential continuous path of 0.6 ft/s exists from the inner annulus

to the sump strainer. Some RMI jacketing is therefore considered to transport to the sump strainer, although this transport is not considered plausible.

4) Provide a summary of, and supporting basis for, any credit taken for debris interceptors.

SNC Response 3.e.4:

Due to uncertainties from the ongoing GSI-191 issues debris interceptors were installed on both units. The interceptors are 2.5 feet tall and have a 6.0 inch horizontal plate attached at their top, which faces upstream of the direction of flow of the post-LOCA containment pool. Undoubtedly, these interceptors would reduce the amount of debris reaching the sump strainers; however, no credit for these interceptors is taken. The CFD analyses conducted with and without the interceptors indicate that the interceptors do not significantly affect the flow velocities as their height is well below the minimum calculated sump levels.

5) State whether fine debris was assumed to settle and provide basis for any settling credited.

SNC Response 3.e.5:

[[

]]

6) Provide the calculated debris transport fractions and the total quantities of each type of debris transported to the strainers.

SNC Response 3.e.6:

The amount of debris determined to transport to the sump strainer is provided in Table 3e-1.

Table 3e-1 – Summary of Debris Generated and Transported to Strainer Modules

Debris Type	Units	Quantity Generated	Transport Fraction	Quantity at Strainer Modules
Fibrous Insulation Debris				
Temp-Mat	[ft^3]	1	1.0	1
Coating Debris in 4D ZOI Modeled as Fines				
Concrete Coatings	[ft^2; ft^3]	523 ; 0.81	1.0	523 ; 0.81
Steel Coatings	[ft^2; ft^3]	1091 ; 1.36	1.0	1091 ; 1.36
Sum	[ft^2; ft^3]	1614 ; 2.18	——	1614 ; 2.18
Coating Debris in 4D ZOI Modeled as Chips				
Concrete Coatings	[ft^2; ft^3]	523 ; 0.81	0.871	456 ; 0.71
Steel Coatings	[ft^2; ft^3]	1091 ; 1.36	0.704	768 ; 0.96
Sum	[ft^2; ft^3]	1614 ; 2.18	——	1224 ; 1.67
Unqualified Coating Debris Modeled as Fines				
Unqualified Coatings (Actual)	[ft^2; ft^3]	1070 ; 0.535	1.0	1070 ; 0.535
Latent Debris				
Latent Fiber (Walkdown)	[ft^3]	7.8	1.0	7.8
Latent Fiber (30 lb_m)	[ft^3]	12.5	1.0	12.5
Latent Particulate (Walkdown)	[ft^3]	0.63	1.0	0.63
Latent Particulate (170 lb_m)	[ft^3]	1.01	1.0	1.01
Reflective Metal Insulation Debris				
Transco Foil	[ft^2]	2383	0.799	1904
Mirror Foil	[ft^2]	35714	0.769	27464
Foil Sum	[ft^2]	38097	——	29368
RMI Jacketing	[ft^2]	8022	0.338	2711
Foreign Material				
Foreign Material[1] (labels, stickers, etc.)	[ft^2]	36.4	1.0	36.4

[1] The Foreign Material quantity was doubled for hydraulic testing

3.f Head Loss and Vortexing

NRC Issue:

The objectives of the head loss and vortexing evaluations are to calculate head loss across the sump strainer and to evaluate the susceptibility of the strainer to vortex formation.

1) Provide a schematic diagram of the emergency core cooling system (ECCS) and containment spray systems (CSS).

SNC Response 3.f.1:

See Figure 3.f.1-1 for ECCS Drawing

See Figure 3.f.1-2 for CSS Drawing

Figure 3.f.1-1
Emergency Core Cooling System (ECCS)

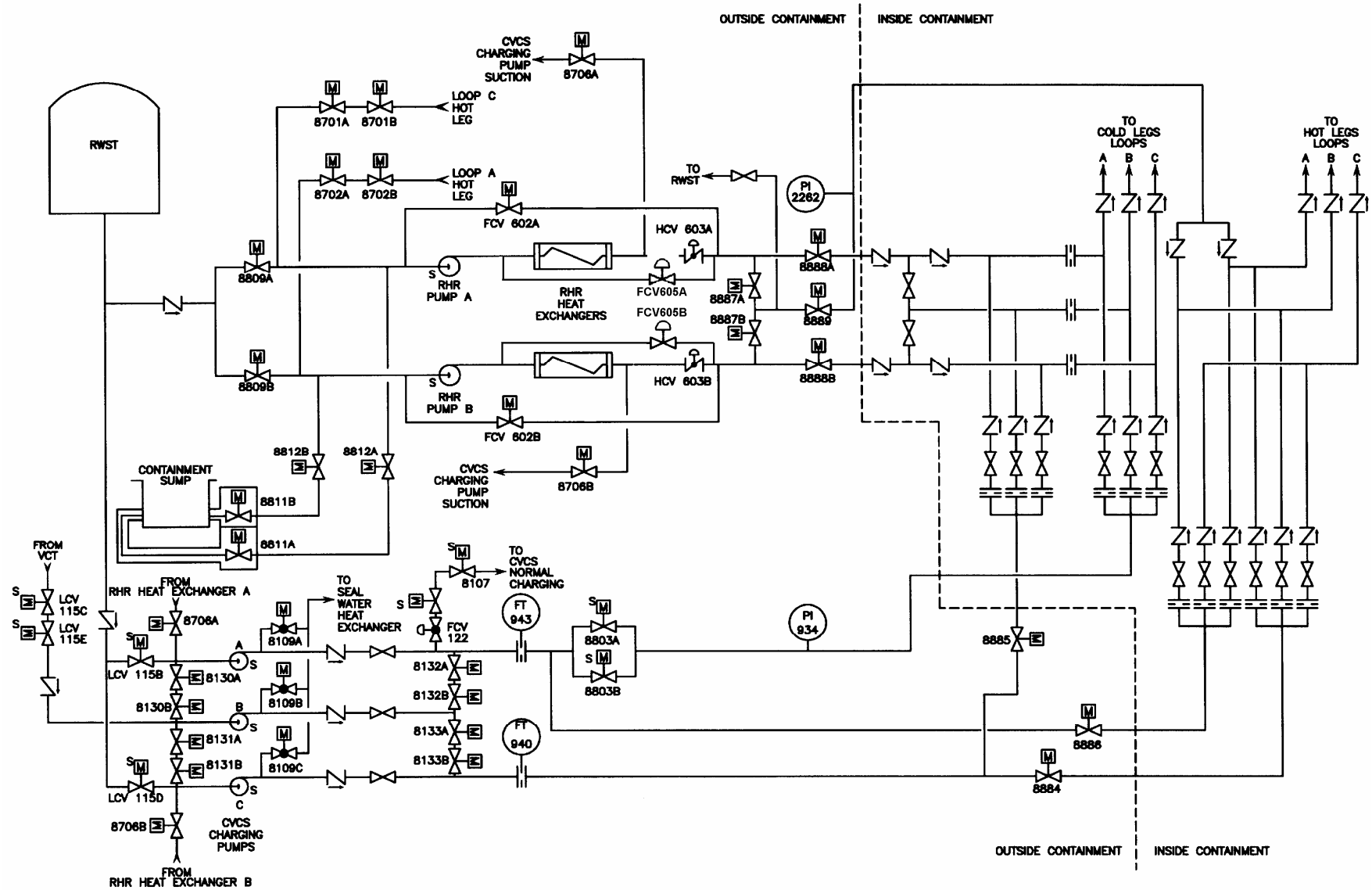

Figure 3.f.1-2
Containment Spray System (CCS)

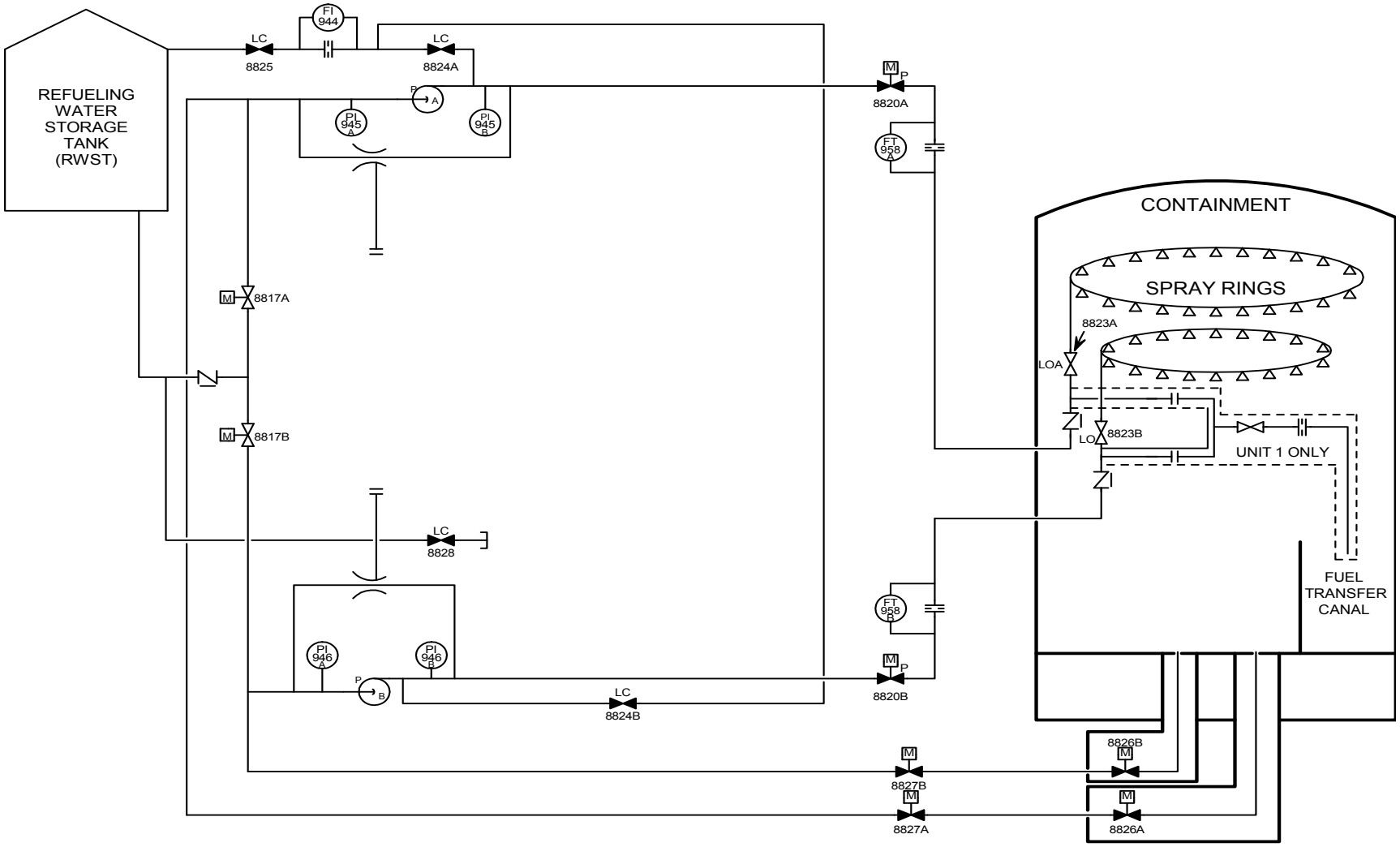

2) Provide the minimum submergence of the strainer under small-break loss-of-coolant accident (SBLOCA) and large-break loss-of-coolant accident (LBLOCA) conditions.

SNC Response 3.f.2:

For the limiting break for strainer head loss as selected in accordance with NEI 04-07, strainers would be fully submerged at the minimum calculated sump levels. The RHR strainer height is 44.75 inches above the floor. With leveling shims the height may be increased at points on the strainers less than an inch. The minimum calculated water level is 54 inches above the floor elevation which is calculated to occur for the long term and not at the initiation of recirculation. This is largely due to gradual refilling of the area under the reactor vessel and due to conservatively postulated refilling of the SG tubes and the pressurizer. One of the Unit 1 CSS strainers is 46.2 inches high; therefore it will have slightly less submergence. Under this scenario the strainers will be fully submerged by no less than 6 inches.

A small break LOCA that results in minimum sump level would be one that occurs on top of the pressurizer. This level was not calculated as it is not a limiting break location that results in the highest strainer head losses. The connections on the top of the pressurizer are 6 inches in diameter. Therefore a break in this location would produce very small amounts of debris. In addition, as compared to the limiting large break location, a small break would result in lower sump flow rates and therefore reduced sump debris transport. The resultant reduced RHR flow rates would result in a reduction in both system head loss and a reduction in the NPSH required for the RHR pumps. Expected full debris loading for LBLOCA debris bed is in the 2 to 4 inch range; therefore a SBLOCA clearly does not present a significant challenge to the ECCS sump performance and is bounded by a LBLOCA. Since this is not a limiting break location, the strainer submergence was not calculated for this break. However, there could be some limited transitory un-coverage of the RHR strainers upon the initiation of recirculation. Continued draw down of the RWST by the CSS pumps would limit the time of un-coverage to a matter of minutes.

As the strainers are well covered for the limiting breaks, the potential for air injection due to buoyant debris accumulation on top of the strainer is not considered to be plausible. For breaks that may result in some transient exposure, RHR flow rates would be reduced. CSS strainers would be fully covered as the RWST level is drawn down further before CSS is placed on recirculation.

A vortexing analysis was done for the FNP strainers assuming maximum RHR and CSS flow rates. Vortexing was not indicated

using the assumption that the strainer has the geometry of an open ended submerged pipe. This conservatively does not account for the complex stacked disc geometry of the strainer which would, in effect, act as vortex breakers.

3) Provide a summary of the methodology, assumptions and results of the vortexing evaluation. Provide bases for key assumptions.

SNC Response 3.f.3:

Strainer air ingestion due to vortexing can be predicted using the strainer geometry, flow rate, water depth, air and water density. The following formula must be satisfied to avoid air ingestion:

$$\frac{\dfrac{U}{\sqrt{g * D_h}} * \left(\dfrac{\rho_L}{\rho_L - \rho_g}\right)^{0.5}}{0.2 * \left(\dfrac{h_b}{D_h}\right)^{2.5}} < 1 \qquad \text{Eq. 1}$$

Where:
ρ_L = Water Density, lbm/ft^3
P_g = Air Density, lbm/ft^3
h_b = Water Depth above Hole / Break / Strainer, ft
D_h = Hydraulic Diameter, ft
U = Velocity of Flow into the Top Gaps of the Strainer, ft/s
g = Gravitational Acceleration, ft/s^2

Because the upper circumscribed surface of the strainer is closest to the water surface, it is assumed being bounding in terms of air ingestion. For a horizontal axis stacked disk strainer, define the hydraulic diameter of the gaps between the plates on the topmost surface. All gaps were considered. For a vertical axis stacked disk strainer or plenum style strainer, the top surface is not perforated, so we analyze the top-most gap between strainer plates.

The geometry of the stacked disk strainers does not allow a vortex to form directly from the suction inlet to the surface of the water. Based on the analysis, vortexing and air ingestion will not occur between the strainer and the water surface.

4) Provide a summary of the methodology, assumptions, and results of prototypical head loss testing for the strainer, including chemical effects. Provide bases for key assumptions.

SNC Response 3.f.4:

Module testing consists of scaling the plant's debris load and measuring the debris induced head loss across a module of a strainer. These tests determine the head loss characteristics of plant specific debris as a function of scaled debris load and scaled flow rate.

Four module tests were be performed to analyze the four strainer bounding cases, either maximum flowrate bounding condition or minimum headloss allowable bounding condition. They are:

- 1M-RHR-40H: simulating RHR 40"X40" Horizontal Stacked Disks strainer with minimum headloss allowable condition;
- 2M-CS-U2B-40H: simulating Unit 2 CS B-Train 40"X40" Horizontal Stacked Disks strainer with maximum flowrate condition;
- 3M-CS-U2B-30H: simulating Unit 2 CS B-Train 30"X30" Horizontal Stacked Disks strainer with minimum headloss allowable condition;
- 4M-CS-U1B-30V: simulating Unit 1 CS B-Train 30"X30" Vertical Stacked Disks strainer.

The test module is composed of either ten 40" X 40" or ten 30" X 30" square perforated disks. The test module is mounted on the center of the test pool with same floor clearance as its simulating strainer. Water level was maintained 3.5" ±0.5 above the top of the test article.

The flow rates for the test are scaled per equation 2 and 3, which yields the same perforated plate flow velocity for the module test as in the plant installed strainer. The calculated circumscribed flow approach velocity for the module test is slightly higher than the plant strainer for conservatism.

$$Q_{module.RHR} = Q_{plant.RHR} \times \frac{Area_{perforated.module}}{Area_{perforated.plant.RHR} - 0.75 * Area_{label} * \frac{Q_{plant,RHR}}{Q_{Plant,CS} + Q_{plant,RHR}}} \quad \text{Eq. 2}$$

$$Q_{module.CS} = Q_{plant.CS} \times \frac{Area_{perforated.module}}{Area_{perforated.plant.CS} - 0.75 * Area_{label} * \frac{Q_{plant,CS}}{Q_{Plant,CS} + Q_{plant,RHR}}} \quad \text{Eq. 3}$$

Where:

Q_{Module} = module RHR / CS test flow rate (gpm)

$Q_{plant.RHR/CS}$ = Plant RHR / CS pump flow rate (gpm)

$Area_{perforated.Module}$ = Module unblocked perforated surface area (ft2)

$Area_{perforated.plant.RHR / CS}$ = Plant RHR / CS strainer unblocked perforated surface area (ft2)

$Area_{label}$ = Total labels surface area (ft2)

The debris quantities in the module test matrix were calculated using the limiting case debris loads in Equation 4 and 5, which yield the same debris bed thickness for the module test as in the plaint installed strainer.

$$Mass_{debris.module.CS} = Mass_{debris.Generated} \times \frac{Q_{CS}}{Q_{RHR} + Q_{CS}} \times R_{dist.debris} \times \frac{Area_{perforated.module}}{Area_{perforated.plant.CS.Sump}} \quad \text{Eq. 4}$$

$$Mass_{debris.module.RHR} = Mass_{debris.Generated} \times \frac{Q_{RHR}}{Q_{RHR} + Q_{CS}} \times R_{dist.debris} \times \frac{Area_{perforated.module}}{Area_{perforated.plant.RHR.Sump}} \quad \text{Eq. 5}$$

Where:

$Mass_{debris.module}$ = Mass of debris in the module test matrix (lbs)

Q = Sump Flow Rate (gpm)

$Mass_{debris.Generated}$ = Mass of debris that is generated during a worst-case LOCA (lbs)

$Area_{perforated.plant}$ = Total installed strainer perforated surface area (ft²)

$Area_{perforated.module}$ = Total test module perforated surface area (ft²)

$Q_{CS.40}$, $Q_{CS.30}$ = 40"X40" or 30"X30" sub-unit flowrate for CS B-Train (gpm)

Rdist.debris = Debris distribution ratio. $R_{dist.debris}$ is 1, except:

$$R_{dist.debris} = Q_{CS.40} / Q_{CS}$$, for 40"X40" sub-unit in U2 CS Bravo; and

$$R_{dist.debris} = Q_{CS.30} / Q_{CS}$$, for 30"X30" sub-unit in U2 CS Bravo.

The module tests make use of the following assumptions:

- The flow rate is proportional to the perforated area of the strainers;
- The debris load is distributed based on flow rate and among the strainers;
- The debris bed is uniform – same thickness throughout perforated surface;
- In the debris load calculation, the perforated surface area of a plant installed strainer is the actual perforated surface area minus the sacrificial area.

See SNC response to question 3.o.1 for results of chemical effects testing for FNP.

5) Address the ability of the design to accommodate the maximum volume of debris that is predicted to arrive at the strainer.

SNC Response 3.f.5:

During a LOCA, the following types of debris may be generated by the high energy steam and liquid impingement and water wash down/flow. This flow would transport a portion of the debris to the RHR & CSS suction strainers. The following are the types and the amounts of debris that would be generated:

- Fibrous Insulation: TempMat fiber insulation of 1 ft^3 volume. All fiber insulation generated is assumed to be transported to the sump strainer.
- Reflective Metal Insulation (RMI): It is approximate surface area 38,097 ft^2 for the bounding case, Break S2. RMI is not a favorable substance for debris bed growth. NEI suggests that head loss tests with RMI are not required as it is non-conservative.

- Latent Debris: 200 lbm of latent debris is considered to be 15% fiber, simulated by Transco in test, and 85% particulate, simulating by silicon carbide. Assuming all latent debris is transported to the sump strainer.

- Qualified and Unqualified Coating: Use 4 ZOI (1,224 ft^2) for acceptable coatings and a value of 1,070 ft^2 for unqualified coatings. This is a total of 2,294 ft^2 of coatings. Qualified coatings are conservatively assumed to fail as chips. The justified size distribution for unqualified coating debris is 428 ft^2 of chips and 642 ft^2 of 10 μm particulate debris based on the latest CFD analysis. Transport fractions for both qualified and unqualified coatings are conservatively assumed to be 100%.

[[

]]

Some chips fall down due to gravity and accumulate under the horizontal stacked disks test article, which has the same phenomenon in the plant operating condition.

The suction strainers were designed for a worst case operating scenario where maximum headloss causing debris reaches the strainers and contributes to headloss at the highest possible flow rate. The scenario involves single train operation, when only one RHR and one CSS pump are operating. The percentage of transported debris that adheres to each strainer is assumed to be equal to the strainer's percentage of total flow.

6) Address the ability of the strainer to resist the formation of a "thin bed" or to accommodate partial thin bed formation.

SNC Response 3.f.6:

Fibrous debris nominal thickness ranges from 0.105" to 0.179" in plant installed units with worst case operating scenario. A "thin bed" is expected to be formed during the strainer operation.

FNP module test is a headloss test that uses multiple disk sets to simulate a full size strainer. The debris load and flow rate are scaled to simulate plant conditions. A "thin bed", simulating plant conditions, is formed in the test article during the test and the headloss results from the test was used as input data for plant headloss predication calculation.

7) Provide the basis for the strainer design maximum head loss.

SNC Response 3.f.7:

The GE hydraulic suction strainer design methodology is based on plant specific debris head loss testing. Debris head loss correlations were developed using the laboratory test results, scaled to the full plant design conditions.

The head loss margin or head is determined by summing up all the head loss components and deducting them from the allowable head loss, as follows:

$$Head\ Loss\ Margin = Allowable\ Head\ Loss - (HL_{debris_plant} + HL_{clean_plant} + HL_{chemical_effects} + HL_{pipes\&plenum}) \quad \text{Eq. 6}$$

Where:

Allowable Head Loss	= maximum head loss allocated to strainer.
HL_{debris_plant}	= debris head loss at plant conditions.
HL_{clean_plant}	= clean head loss at plant conditions.
$HL_{pipes\&plenum}$	= head loss on pipes and / or plenum.
$HL_{chemical_effect}$	= head loss due to chemical effect.

8) Describe significant margins and conservatisms used in the head loss and vortexing calculations.

SNC Response 3.f.8:

The assumptions, margins and conservatisms are listed as follows:

- The flow rate is proportional to the perforated area of the strainers;
- The debris load is distributed based on flow rate and among the strainers;
- The debris bed is uniform – same thickness throughout perforated surface;
- In the debris load calculation, the perforated surface area of a plant strainer is the actual perforated surface area minus the sacrificial area.
- 100% of fibrous, particulate debris transported to the sumps is assumed to adhere to the strainers and contribute to head loss.

- All the labels and tags are modeled with 100 % transport to the sump strainer. The total sacrificial area is calculated by an equivalent to 75 % of the original single sided surface area, counting for 50 % overlap.
- Failure of one ECCS strain is assumed to simulate the worst-case LOCA conditions, as it will deliver the largest amount of debris for one train of strainers (single failure condition).
- Due to extremely low approach and perforated flow velocities, laminar flow is assumed for debris head loss calculations.
- Minimum water level at sump strainer.
- All Service Level 1coating (100 %) that fail are assumed to fail as paint chips. Transport fraction for Service Level 1coatings is 100 %.
- For unqualified coating 40 % are assumed to fail as chips and 60 % fail as 10 µm particulate debris. This is bases of the distribution of the sump calculated flow velocities. Transport fraction for unqualified coatings is 100 %.
- Head loss margin is calculated for indicated low end of sump water temperature and highest ECCS flow rate.
- The upper circumscribed surface is assumed to be bounding in terms of air ingestion because air ingestion is evaluated at the top of the module, which is the closest surface to the water level.

9) Provide a summary of the methodology, assumptions, bases for the assumptions, and results for the clean strainer head loss calculation.

SNC Response 3.f.9:

Clean head losses reflect the hydraulic losses associated with clean water flow through the strainer internals.

The clean head loss is calculated based on the strainer geometry and flowrate. The clean head loss is primarily the sum of the disk inside loss, the converging loss and the corrugated tube type loss. The clean head loss for the test module is also calculated by the same methodology and compared with the measured values for conservatism confirmation.

Figure 3.f.9-1 Converging Loss Calculation

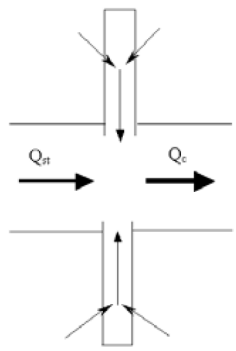

The converging loss coefficient for each disk is as stated in I.E. Idelchik, "Handbook of Hydraulic Resistance", 3rd edition:

$$\zeta_R = 1 + \left(\frac{Q_{st}}{Q_c}\right)^2 - \left(\frac{Q_{st}}{Q_c}\right)^2 * \frac{1 + Q_{st}/Q_c}{(0.75 + 0.25 * Q_{st}/Q_c)^2} \qquad \textbf{Equation 1}$$

$$\zeta_B = 1 + \left(\frac{Q_{1s} * F_c}{Q_c * F_{1s}}\right)^2 - 8 * \left(\frac{Q_{1s}}{Q_c}\right)^2 * \frac{[Q_c / Q_{1s} - (1 + Q_{2s} / Q_{1s})]^2}{4 - (1 + Q_{2s} / Q_{1s}) * Q_{1s} / Q_c} \qquad \textbf{Equation 2}$$

ζ_R = Coefficient of running loss
ζ_B = Coefficient of branch merging loss
Q_{st} = Flow rate getting into the intersection from the core(gpm)
Q_c = Flow rate exiting out from the intersection (gpm)
$Q_{1s,2s}$ = Flow rate getting into the intersection from the branch(gpm)
$F_{c,\,1s}$ = Section area in center core and side branch (ft^2)

The corrugated tube type loss coefficient can be obtained from Diagram 2-13 of I.E. Idelchik, "Handbook of Hydraulic Resistance", 3rd edition, with the calculated Reynolds number based on strainer / module's geometry and flowrate. The disk inside loss includes friction loss, contraction loss and branch merging loss inside the disk. The calculation is based on the assumption of equal flow for each disk. Most of the LOCA generated debris will be distributed on the few disks close to the strainer flange and the flow is balanced across the strainer. Calculated clean head loss results (@ 120º F) are listed as below.

Table 3.f.9-1 Clean Strainer Calculated Head Loss (inches)

Unit 1				Unit 2			
RHR		CSS		RHR		CSS	
A-Train	B-Train	A-Train	B-Train	A-Train	B-Train	A-Train	B-Train
26.6"	26.6"	13.7"	3.0"	26.6"	26.6"	13.7"	27.5"

10) Provide a summary of the methodology, assumptions, bases for the assumptions, and results for the debris head loss analysis.

SNC Response 3.f.10:

Because containment sump water temperature following a LOCA is usually considerably greater than the temperature at which the hydraulic tests are run, debris head loss needs to be scaled to plant conditions as follows:

$$HL_{debris_plant} = HL_{debris_test} * \left[\left(\frac{viscosity_{plant}}{viscosity_{test}} \right) * \left(\frac{velocity_{plant}}{velocity_{test}} \right) * \left(\frac{debris_thickness_{plant}}{debris_thickness_{test}} \right) * \left(\frac{water_density_{test}}{water_density_{plant}} \right) \right]$$

where:

HL = debris head loss through strainer in feet of water.

viscosity = dynamic viscosity of water in lbm/ft-sec.

water_density = density of water in lbm/ft^3.

velocity = approach velocity in ft/sec.

debris_thickness = nominal debris bed thickness in ft.

Nominal debris bed thickness is calculated as follows:

$$debris_thickness = \frac{mass_{fiber}}{density_{fiber} * perforated_area}$$

where:

$mass_{fiber}$ = mass of fiber debris in lbm.

$density_{fiber}$ = as-fabricated density of the fiber debris in lbm/ft^3.

perforated_area = total surface area of the perforated plates in ft^2.

For conservatism, the debris bed is assumed to be uniform, same thickness throughout perforated surface.

Table 3.f.10-1 Strainer Debris Head Loss

Unit 1				Unit 2			
RHR		CSS		RHR		CSS	
A-Train	B-Train	A-Train	B-Train	A-Train	B-Train	A-Train	B-Train
1.24"	1.24"	1.34"	2.39"	1.24"	1.24"	1.34"	2.06"

11) State whether the sump is partially submerged or vented (i.e., lacks a complete water seal over its entire surface) for any accident scenarios and describe what failure criteria, in addition to loss of net positive suction head (NPSH) margin, were applied to address potential inability to pass the required flow through the strainer.

SNC Response 3.f.11:

For the limiting break, the strainers are completely submerged. Further Discussion is provided under item 3.f.2).

12) State whether near field settling was credited for the head loss testing and, if so, provide a description of the scaling analysis used to justify near-field credit.

SNC Response 3.f.12:

[[

]]

13) State whether temperature/viscosity was used to scale the results of the head loss tests to actual plant conditions. If scaling was used, provide the basis for concluding that boreholes or other differential pressure induced effects did not affect the morphology of the test debris bed.

SNC Response 3.f.13:

All FNP head loss tests were run at a water temperature of 90 – 100 °F based on the test facility capability. Debris head loss would be scaled to plant conditions, minimum sump temperature of 120° F.

The debris loading surface was inspected after the completion of head loss testing for the presence of boreholes or other surface anomalies, and no evidence of boreholes or other surface anomalies was found. Head loss plots show fairly smooth curves, without jittering, and no boreholes or other surface anomalies credit was taken for the testing. A typical head loss verses time curve is plotted as below.

Figure 3.f.13-1 Typical Head Loss Plot

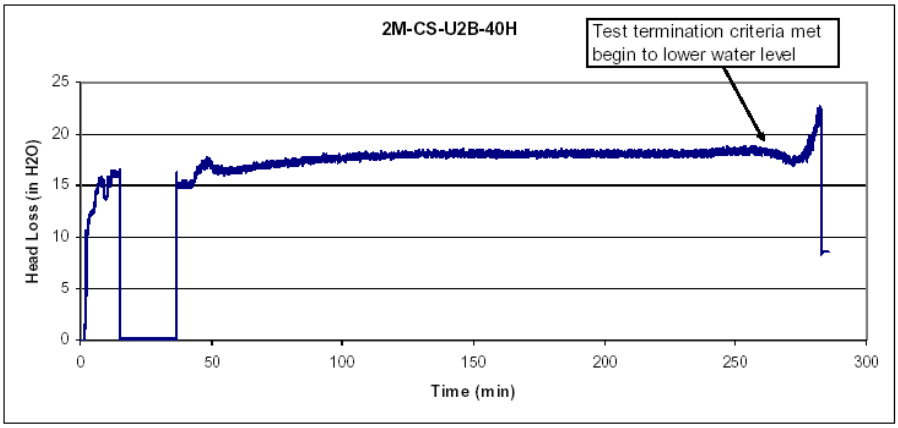

14) State whether containment accident pressure was credited in evaluating whether flashing would occur across the strainer surface, and if so, summarize the methodology used to determine the available containment pressure.

SNC Response 3.f.14:

Yes, SNC credits overpressure, but only for flashing through the strainer. If no overpressure is credited, physics says you will flash across the strainer surface. Two versions of the analysis were prepared using GOTHIC®, the design basis containment analysis as described in the Finial Safety Analysis Report (FSAR) and a design basis containment analysis modified with realistic inputs to minimize containment overpressure, both as a function of time, and the minimum value selected. This evaluation resulted in the minimum overpressure as a function of time from the design basis containment analysis.

3.g Net Positive Suction Head (NPSH)

NRC Issue:

The objective of the NPSH section is to calculate the NPSH margin for the ECCS and CSS pumps that would exist during a loss-of-coolant accident (LOCA) considering a spectrum of break sizes.

1) Provide applicable pump flow rates, the total recirculation sump flow rate, sump temperature(s), and minimum containment water level.

SNC Response 3.g.1:

The RHR pump flow rates are 4,500 gpm each. The CSS pump flow rates are 3,400 gpm each. The maximum recirculation flow rate would occur with two pumps operating in each train. This would result in 15,800 gpm. A minimum water temperature for the early part of recirculation for a LOCA that would result in automatic initiation of CSS was calculated at approximately 160 °F at 10,000 seconds into the event.

2) Describe the assumptions used in the calculations for the above parameters and the sources/bases of the assumptions.

SNC Response 3.g.2:

The RHR pump flow rates are set via mechanical stops. The CSS flow rates are maximum values for pump run-out. The minimum sump temperature value was calculated from a GOTHIS® run assuming an 8 inch break.

3) Provide the basis for the required NPSH values, e.g., 3 % head drop or other criterion.

SNC Response 3.g.3:

Required NPSH values are based upon 3 % head drop.

4) Describe how friction and other flow losses are accounted for.

SNC Response 3.g.4:

The verification of adequate NPSH to the RHR and CSS pumps from the containment sump used a three step process. First, the maximum pump flow rates were determined using detailed hydraulic network software models with boundary conditions and input values chosen to predict conservatively high flow rates. These maximum flow rates were then used to predict the pressure drop expected through the sump intake structure and pump suction piping due to friction and form losses using a combination of experimental and published loss coefficients. The pressure drops were then used to calculate the pump minimum available NPSH using conservative containment pressure and temperature assumptions.

5) Describe the system response scenarios for LBLOCA and SBLOCAs. **AND**

6) Describe the operational status for each ECCS and CSS pump before and after the initiation of recirculation.

SNC Response to 3.g.5 and 3.g.6:

In response to a LOCA, the RHR pumps and Centrifugal Charging Pumps (CCP) automatically start upon receipt of a safety injection signal. These pumps inject to the reactor coolant system cold legs, taking suction from the RWST. This system line-up is referred to as ECCS Injection phase. The CSS pumps start automatically when the containment pressure reaches the setpoint for CSS actuation; the CSS pumps also take suction from the RWST. The switchover to the ECCS recirculation sumps as suction source to the RHR pumps is initiated when the RWST water level decreases to less than 12.5 ft.

After the ECCS recirculation line-up is established, the RHR pumps combine to inject to the RCS cold legs and to supply water to the suction of the CCPs. The CCPs continue to inject to the RCS cold legs. This line-up is referred to as ECCS Cold Leg Recirculation. At approximately 7.5 hours into the event, the ECCS line-up is modified for simultaneous Cold and Hot Leg recirculation. The results in the RHR pumps being aligned to the hot legs and the CCPs aligned to the cold legs.

The CCPs continue to take suction from the RWST until the suction source is manually switched over to the ECCS recirculation sumps when the RWST water level decreases to approximately 4.5 ft.

The above describes the design response for the ECCS and the CSS to a LOCA. The differences between the response to a Large Break LOCA and a Small Break LOCA are:

- Depending on the size of the break, the RCS pressure may stabilize at a value that does not allow injection from the RHR pumps.

- During SBLOCA scenario, the containment accident pressure will likely remain below the actuation setpoint for CSS.

During a SBLOCA, the outflow from the RWST may be sufficiently low that the plant may be taken to a safe shutdown condition before the RWST level setpoint for ECCS switchover is reached. Additionally, the quantity of debris that is generated during a

SBLOCA scenario is a fraction of the design basis debris quantity that was used to size the strainers.

7) Describe the single failure assumptions relevant to pump operation and sump performance.

SNC Response 3.g.7:

Each RHR and CSS pump has a separate strainer. For strainer loading, it is assumed that only one train of each system operates. This maximized debris loading on the strainers.

8) Describe how the containment sump water level is determined.

SNC Response 3.g.8:

Conservative contribution from the RWST, RCS and Accumulators are summed to provide the total inventory. For more detail see the response to 3.g.9.

9) Provide assumptions that are included in the analysis to ensure a minimum (conservative) water level is used in determining NPSH margin.

SNC Response 3.g.9:

The following assumptions are included in the SNC analysis:

- ECCS switchover and containment spray switchover are assumed to be instantaneous. This eliminates the increase in flood level during the switchover sequence.
- The minimum RWST volume is assumed from the beginning of the LOCA event to the start of ECCS and CSS switchover. This minimizes the water volume available from the RWST for flooding.
- Maximum RWST level instrument errors are assumed to minimize the available volume.
- The maximum RCS temperature is used to calculate the density of the RCS water. This minimizes the available mass in the RWST for injection into the RCS and containment sump.
- The minimum pressurizer volume is used. This minimizes the water available from the pressurizer for flooding of the sump.
- The minimum safety injection accumulator volume is used. This minimizes the water available from the safety injection accumulators for flooding of the sump.

- A low initial containment relative humidity is used. This minimizes the water vapor in the containment free volume available for flooding of the sump.
- The maximum initial containment temperature is used. With a fixed initial relative humidity and pressure, this minimizes the water in the containment air space available for flooding of the sump.
- A conservatively high RWST temperature is assumed to reduce mass.
- For long term ECCS sump level, it is assumed that the RCS partially refills except for the cold legs, this includes the pressurizer and the SG tubes. This minimizes the water available for flooding of the sump.

The quantity of water diverted from the containment sump is calculated for each break. Water is diverted from the containment sump by the following effects:

- Steam holdup in the containment atmosphere.
- Additional mass of water that must be added to the RCS due to the increase in the water density at the lower sump water temperature (RCS Shrinkage).
- Filling of the reactor cavity beneath the vessel.
- ECCS leakage outside of containment.
- Water volumes in transit in the form of containment spray droplets and wetted surface film.
- Water volume required to fill the RHR and CSS piping that is empty prior to the LOCA.
- Filling of containment floor drains.
- Filling of the Reactor Cavity Waste Sump.
- The mass of water inventory in the RWST is minimized by assuming a maximum temperature.
- The mass of water inventory in the accumulators is minimized by assuming a maximum temperature.
- All containment spray falling into the refueling cavity at elevation 129’ is assumed to drain to the reactor cavity.
- It is assumed that in the long-term the reactor cavity will fill until the water level reaches the nozzle center line at elevation 122’-9” at which point the water will drain through the 1/2” clearances around the flow restrictor bulkheads and out through the RCS loop piping penetrations in the primary shield wall.
- The minimum water level calculation does not reduce the steam generator primary side volume to account for tube plugging.

- It is assumed that the reactor cavity sump is an open volume. Water flowing into the sump will also flow into the reactor cavity unimpeded. This is conservative because any resistance would decrease flow through the drain lines. The sump cover plate and the drain fitting will provide some resistance which would reduce flow.
- The following is a summary of the atmospheric holdups from water vapor that reduce the containment sump water inventory:

Max after switchover to ECCS Recirculation	128,795 lbm
Max after switchover to CSS Recirculation	88,905 lbm
End-of-Event	7,990 lbm

- The following is a summary of the RCS Shrinkage and Pressurizer Steam Space holdups for the different breaks and times considered.

ECCS and CSS Recirculation	60,221 lbm
End-of-Event (Shrinkage + PRZ Steam Space)	216,029 lbm

- The following is a summary of the total ECCS leakage outside containment for the different times considered.

ECCS Recirculation	0 gallons
CSS Recirculation	1,500 gallons
End-of-Event	2,278 gallons

10) Describe whether and how the following volumes have been accounted for in pool level calculations: empty spray pipe, water droplets, condensation and holdup on horizontal and vertical surfaces. If any are not accounted for, explain why.

SNC Response 3.g.10:

The following additional volume reductions based are conservatively assumed to be filled from switchover to ECCS recirculation through the end of the event.

- Containment spray and RHR system filling – 4,865 gallons
- Containment floor drain filling – 1,200 gallons
- Reactor cavity waste sump filling – 462 gallons
- Spray droplets / wetted surface film – 9,804 gallons

Total additional volume reduction = 16,331 gallons

11) Provide assumptions (and their bases) as to what equipment will displace water resulting in higher pool level.

SNC Response 3.g.11:

Permanent concrete structures located in the emergency sump area such as the primary and secondary shield walls, the refueling cavity and the elevator shaft walls will displace water. Other equipment located in the emergency sump area below the elevation of the sump strainers that will displace water and the volume each will displace are:

Tri-Sodium Phosphate (TSP) Baskets	NA
Excess Letdown Delay Piping	11 ft^3
Excess Letdown Heat Exchanger	6 ft^3
Letdown Line Delay Piping	8 ft^3
Containment Sumps	NA
Stair No.3	2 ft^3
Breathing Air Purifier	11 ft^3
Reactor Coolant Drain Tank Heat Exchanger	14 ft^3
Scaffolding Storage Box	NA
Tool Storage Box	NA
Stair No.4	2 ft^3
3 Lure Oil Collection Tanks	122 ft^3
RCP & SG Supports	290 ft^3
Reactor Coolant Drain Tank	50 ft^3
Pressurizer Relief Tank	739 ft^3
Regenerative Heat Exchanger	15 ft^3

Note that the reactor cavity area below the reactor vessel is assumed to flood in the during the long term LOCA event.

12) Provide assumptions (and their bases) as to what water sources provide pool volume and how much volume is from each source.

SNC Response 3.g.12:

The following water sources are considered to contribute to the containment post-accident pool volume:

- RCS – minimum volume used – 4,946 ft^3

  This volume includes Steam Generator tubes volume.

- RWST – minimum volume used from start of event to ECCS switchover - 294,891 gallons.

  The volume is determined by considering the volume available between the minimum RWST starting volume of 471,000 gal. (required by Technical Specifications (TS) 3.5.4, "Refueling Water Storage Tank (RWST)") and the RWST Low Level alarm (beginning of ECCS switchover sequence) of 176,109 gal., accounting for a 19 inch differential level uncertainty.

- RWST – minimum volume used from ECCS switchover to CSS switchover – 99,454 gallons.

  The volume is determined by considering the volume available between the RWST Low Level alarm (Beginning of ECCS switchover sequence) of 176,109 gal., and the 6.17 ft. CSS switchover level setpoint, accounting for a 19 inch differential level uncertainty.

- Safety Injection Accumulators – minimum volume used - 22,665 gallons.

  This volume corresponds to the minimum water level required by the TS (3.5.1, "Accumulators").

13) If credit is taken for containment accident pressure in determining available NPSH, provide a description of the calculation of containment accident pressure used in determining the available NPSH.

SNC Response 3.g.13:

Credit is not taken for containment accident pressure above that of the vapor pressure of the sump water. For the long term, containment pressure is assumed to be at atmospheric pressure minus allowances for air cooling, leakage and changes in humidity.

14) Provide assumptions made which minimize the containment accident pressure and maximize the sump water temperature.

SNC Response 3.g.14:

When sump temperatures are greater than 212 °F, for calculating NPSHa, no credit is taken for containment pressure above the partial pressure exerted by the sump fluid.

15) Specify whether the containment accident pressure is set at the vapor pressure corresponding to the sump liquid temperature.

SNC Response 3.g.15:

The containment accident pressure is set at the vapor pressure corresponding to the sump liquid temperature when that temperature is above 212 °F. For temperatures below 212 °F, containment pressure is assumed to be at atmospheric pressure minus allowances for air cooling, leakage and changes in humidity.

16) Provide the NPSH margin results for pumps taking suction from the sump in recirculation mode.

SNC Response 3.g.16:

The conservatively calculated limiting NPSH margin occurs at the initiation of recirculation when containment sump conditions are assumed to be in saturation for the purposed of NPSH calculations. At that point in time, the calculated limiting NPSH margins are:

	Unit 1	Unit 2
RHR Pumps	0.98 ft.	0.48 ft.
CSS A Pump	2.63 ft.	2.40 ft.
CSS B Pump	3.04 ft.	0.57 ft.

3.h Coating Evaluation

NRC Issue:

The objective of the coatings evaluation section is to determine the plant-specific ZOI and debris characteristics for coatings for use in determining the eventual contribution of coatings to overall head loss at the sump strainer.

1) Provide a summary of type(s) of coating systems used in containment. (e.g., Carboline CZ 11 Inorganic Zinc primer, Ameron 90 epoxy finish coat.)

SNC Response 3.h.1:

In accordance with FNP Coating Manual, the following coatings systems are applied to steel and concrete inside the bio-shield. They include qualified coating systems. Each coating product can have a different maximum thickness. Therefore, only the maximum total thickness is given. The maximum coating thickness, products and the various coating types are provided in Table 3.h.1-1 and Table 3.h.1-2:

Table 3.h.1-1 Steel Coatings

Coating systems	**Coating Description**	**Possible Products**	**Maximum Thickness (mils)**
CAS-S-2, CAS-S-3	First Coat	Ameron Dimetcote D-6 Vendor Applied Epoxy Enamel Amercon Amercoat 90 Shop primed with manufacturer's standard	--
	Second Coat	Ameron Amercoat 66 Ameron Amercoat 71 Ameron Amercoat 90 Ameron Amercoat 185	--
	Third Coat	Ameron Amercoat 66	--
	Maximum Total Thickness		24

Table 3.h.1-2 Concrete Coatings

Coating systems	**Coating Description**	**Possible Products**	**Maximum Thickness (mils)**
CAS-C-20	First Coat	Ameron Nuklad 108 (optional) Ameron Nu-Klad 105A	-- (seal only) -- (seal only)
	Second Coat	Ameron Nuklad 110AA Ameron Amercoat 3228 Ameron Amercoat 3366 Ameron Amercoat 3367 Ameron Nuklad 109	125
	Third Coat	Ameron Americoat 66 Ameron Amercoat 90 Ameron Amercoat 90HS	--
	Maximum Total Thickness		143

The unqualified coatings quantities include the original equipment manufacturer (OEM) of the coatings and a number of coatings that are considered not qualified due to deficiencies in the application process. A conservative dry film thickness of 8 mils was assumed in the debris generation analysis. Since details of the coatings types are not available for all unqualified coatings, the debris generation analysis assumes that 100% of the unqualified coatings fail. No credit is taken for reducing this quantity based on the results of Electric Power Research Institute (EPRI) OEM Coatings testing.

2) Describe and provide bases for assumptions made in post-LOCA paint debris transport analysis.

SNC Response 3.h.2:

FNP used the qualified Coatings ZOI of 4 as specified by WCAP-16568-P "Jet Impingement Testing to Determine the Zone of Influency (ZOI) for DNA-Qualified /Acceptable Coatings" (reference 32). All qualified coatings (simulated by paint chips) and justified unqualified coatings (simulated by paint chips and silicon carbide / particulate debris) are conservatively assumed to be 100% transported to the sump.

3) Discuss suction strainer head loss testing performed as it relates to both qualified and unqualified coatings and what surrogate material was used to simulate coatings debris.

SNC Response 3.h.3:

The prior FNP sector test results indicated that the bounding condition for simulating plant LOCA debris generation is 100% paint chips and 0% silicon carbide. Qualified coatings are conservatively assumed to fail as chips.

Unqualified coating debris distribution was calculated based on flow velocity magnitude contours by the latest CFD analysis and paint chip tumbling velocity (0.4 ft/s). Unqualified coatings are assumed as being homogeneously distributed in containment. It is also conservatively assumed that all local velocity less than 0.4 ft/s, or no path connected with strainer with more than that velocity, will fail as 10 μm particulate debris and the rest of the area will fail as chips. The calculated size distribution for unqualified coatings debris are 40% failed as chips and 60% as particulate debris. Transport fractions for both qualified and unqualified coatings are 100%.

Chips are simulated by Ameron 90HS with 0.011" thickness according to average measured value. Silicon carbide with 10μm characteristic size is used for simulating particulate debris.

4) Provide bases for the choice of surrogates.

SNC Response 3.h.4:

The surrogates used for the chemical effects head loss testing are those developed in WCAP-16530-NP, namely Calcium Phosphate, Sodium Aluminum Silicate and Aluminum OxyHydroxide.

5) Describe and provide bases for coatings debris generation assumptions. e.g. describe how the quantity of paint debris was determined based on ZOI size for qualified and unqualified coatings.

SNC Response 3.h.5:

Qualified coating debris targets are identified by containment walkdown and plant condition reports that investigated potential qualified coating debris locations within a 12D ZOI of an intermediate leg break. With the qualified coating ZOI reduction to 4D, the targets identified by the 12D evaluation are reassessed to determine whether they remain potential targets for debris generation. Targets included in the 12D analysis whose exact location is indeterminate, are included in the 4D analysis for conservatism. The thickness of coatings is determined by plant walkdowns. An additional 10 % is added to the qualified coating debris calculated for steel surfaces to account for miscellaneous steel such as hand rails, kick plates, ladders and small supports which are not otherwise accounted for.

Unqualified coatings are also identified in containment walkdown and plant condition reports. The amount of unqualified coatings calculated for Unit 2 is applied to both units as the amount calculated for Unit 1 does not include all containment elevations. Conservatively, all unqualified coatings identified in containment, are included in the volume of coating debris generated. A thickness of 6 mils is assumed for unqualified coatings. This was based upon measurement of containment coating thickness.

Table 3h-1: Qualified Coating Debris Based on ZOI = 4D

Break	**Coating Areas (ft^2)**		**Coating Volumes (ft^3)**	
	Concrete	Steel	Concrete	Steel
Interim Leg at SG	200	1332	0.31	1.66
Interim Leg at Mid-span	218	1320	0.34	1.65
Interim Leg at RCP	523	1091	0.81	1.36
Hot Leg at Primary Wall	294	758	0.46	0.95
Hot Leg at SG	0	1196	0	1.49

Table 3h-2: Unqualified Coating Debris

Both Units	Total Area (ft^2)	Total Volume (ft^3)
All Breaks	1070	0.535

6) Describe what debris characteristics were assumed, i.e., chips, particulate, size distribution and proved bases for the assumptions.

SNC Response 3.h.6:

Qualified coatings are conservatively assumed to fail as chips. Unqualified coatings are assumed as 40 % fail as chips and 60 % as particulate debris.

Chips are simulated by Ameron 90HS with 0.011" thickness, according to average measured value from Walkdown Report attached. Larger pieces of coating debris typically cause less head loss than smaller pieces due to the decreased surface-area-to-volume ratio of the larger pieces. The epoxy flake is sifted to limit the maximum flake size to 0.25" to simulate the plant worst condition, reasonably larger than the perforated hole size of 3/32".

Silicon carbide with 10µm characteristic size is used for simulating particulate debris.

7) Describe any ongoing containment coating condition assessment program.

SNC Response 3.h.7:

The acceptability of visual inspection as the first step in monitoring of Containment coatings is validated by EPRI Report No. 1014883, "Plant Support Engineering: Adhesion Testing of Nuclear Coating Service Level 1 Coatings," August 2007 (reference 37). SNC periodically conducts condition assessments of Service Level 1 coatings inside containment. As localized areas of degraded coatings are identified, those areas are evaluated and scheduled for repair or replacement, as necessary. The periodic condition assessments, and the resulting repair/replacement activities, assure that the amount of Service Level 1 coatings that may be susceptible to detachment from the substrate during a LOCA event is minimized.

3.i Debris Source Term Refinements

NRC Issue:

The objective of the debris source term section is to identify any significant design and operational measures taken to control or reduce the plant debris source term to prevent potential adverse effects on the ECCS and CSS recirculation functions.

1) A summary of the containment housekeeping programmatic controls in place to control or reduce the latent debris burden. Specifically, for RMI/low-fiber plants, provide a description of programmatic controls to maintain the latent debris fiber source term into the future to ensure assumptions and conclusions regarding inability to form a thin bed of fibrous debris remain valid.

SNC Response 3.i.1:

SNC procedure, "Foreign Material Exclusion Program," establishes the administrative controls and personnel responsibilities for the Foreign Material Exclusion (FME) program. This procedure places emphasis on the FME program and controls. The procedure describes methods for controlling and accounting for material, tools, parts and other foreign material to preclude their uncontrolled introduction in to an open or breached system during work activities. This procedure also provides guidance for establishing and maintaining system cleanliness, recovering from an intrusion of foreign material and re-establishing system cleanliness requirements.

Additionally, procedure, "Containment Inspection (General)," provides detailed guidance for containment inspection to ensure no loose debris (rags, trash, clothing, etc.) is present in the containment which could be transported to the containment sump and cause restriction of pump suctions during LOCA conditions. This procedure contains an extensive checklist detailing all areas of containment that must be inspected for cleanliness prior to plant startup after each outage.

Procedure, "Containment Inspection (Post Maintenance)," establishes guidance to inventory and control items carried into containment during non-outage entries. This procedure ensures that no loose debris (rags, trash, clothing, etc.) is present in the containment which could be transported to the containment sump and cause restriction of pump suctions during LOCA conditions.

2) A summary of the foreign material exclusion programmatic controls in place to control the introduction of foreign material into the containment.

SNC Response 3.i.2:

See response to 3.i.1 above.

3) A description of how permanent plant changes inside containment are programmatically controlled so as to not change the analytical assumptions and numerical inputs of the licensee analyses supporting the conclusion that the reactor plant remains in compliance with 10 CFR 50.46 and related regulatory requirements.

SNC Response 3.i.3:

The FSAR is reviewed during preparation for each design change. The FSAR has been updated to reflect the analytical assumptions and numerical inputs of the analysis supporting the modifications made in response to GL 2004-02.

An enhancement will be made to the engineering guidance procedure that is part of the design change process. This procedure provides certain screening guidelines and considerations that are taken under advisement when performing design change activities. This enhancement will provide guidance for reviewing the impact of a proposed change on the documentation that forms the design basis for the response to Generic Letter 2004-02. The specific areas that will be addressed are:

- Insulation inside containment
- Coatings inside containment
- Inactive volumes in containment
- Labels inside containment
- Structural changes (i.e., Choke points) in containment
- Downstream Effects (piping components downstream of the ECCS Sump strainers)

Inclusion in the engineering guidance procedure will ensure that design changes consider these attributes during the design process.

4) A description of how maintenance activities including associated temporary changes are assessed and managed in accordance with the Maintenance Rule, 10 CFR 50.65.

SNC Response 3.i.4:

Maintenance activities, including temporary changes are subject to the provisions of 10 CFR 50.65(a)(4) as well as FNP TS. SNC fleet procedures also provide guidance such as the 50.59 Review Process procedure, which provides details and guidance on maintenance activities and temporary alternations, the on-line work control process procedure, which establishes the administrative controls for performing on-line maintenance of structures, systems, components (SSC) in order to enhance overall plant safety and reliability, and the Temporary Configuration Changes (TCC) procedure, which establishes the overall requirements for TCC.

5) If any of the following suggested design and operational refinements given in the guidance report (guidance report, Section 5) and SE (SE, Section 5.1) were used, summarize the application of the refinements:

   A) Recent or planned insulation change-outs in the containment which will reduce the debris burden at the sump strainers

   B) Any actions taken to modify existing insulation (e.g., jacketing or banding) to reduce the debris burden at the sump strainers

   C) Modifications to equipment or systems conducted to reduce the debris burden at the sump strainers

   D) Actions taken to modify or improve the containment coatings program

SNC Response 3.i.5:

None of these suggested design and operational refinements were used in the FNP evaluation.

3.j Screen Modification Package

NRC Issue:

The objective of the screen modification package section is to provide a basic description of the sump screen modification.

1) Provide a description of the major features of the sump screen design modification.

SNC Response 3.j.1:

FNP contracted with General Electric Company (GE) to provide sump strainers that meet the requirements of GL 2004-02. GE

provided FNP with seven horizontal stacked disk strainers and one vertical stacked disk strainer. The strainers were installed in both units' RHR and CSS suction points. Unit 1 has the only vertical stacked strainer installed on the B-Train CSS suction.

The strainers for FNP Unit 1 and Unit 2 are located outside the bio-wall between the bio-wall and CTMT outside wall. This location protects the strainers from missile impacts.

In addition, debris interceptors were installed inside the shield wall to minimize the transport of debris to the strainers. Note that these interceptors are not credited in this analysis.

To remove a possible holdup source, the refueling cavity drain covers are removed prior to the unit returning to power after a refueling outage.

The safety injection throttle valves have been replaced with new valves that allow for the valves internal opening to be greater than the strainer hole size. This has been completed on Unit 1 and will be completed in the fall 2008 outage for Unit 2. This extension for Unit 2 was approved in NRC letter dated August 29, 2007

2) Provide a list of any modifications, such as reroute of piping and other components, relocation of supports, addition of whip restraints and missile shields, etc., necessitated by the sump strainer modifications.

SNC Response 3.j.2:

For Unit 1:

<u>Civil</u>

- Remove existing structural steel Containment Recirculation Sump Protective Covers.
- Remove, re-fabricate, and relocate existing TSP Basket to clear RHR B-Train strainer.
- Permanently remove an existing seismic support to clear RHR B-Train strainer.
- Modify an existing seismic support and relocate another support to clear CSS A-Train strainer.
- Remove and modify service air pipe support to clear CSS B-Train strainer.
- Remove and replace existing lighting panel on elevator pit wall to clear CSS B-Train piping.
- Permanently remove existing "HEAR-HERE" Station to clear RHR A-Train strainer.

- Core drill holes in elevator pit walls for RHR B-Train strainer piping.
- Install Debris Interceptors at Bio-Shield Entrances. These are not credited in this analysis.
- Relocate various existing instrument air pipe supports.

Mechanical
- Re-route service air line.
- Relocate instrument air valve.
- Vortex suppressor removed from the pump suction piping.
- HHSI line drain pipe and valves rotated 180 degrees.
- Install new orifice plates for HHSI Flow Balancing orifices.
- Install new HHSI throttle valves.
- Install new orifice plate in the CTMT floor and equipment drain line.
- Install new orifice plate in the CTMT floor and equipment drain trench.
- Remove the breathing air purifiers and associated distribution piping in containment.

Electrical
- Remove the "HEAR-HERE" Station.
- Relocate Receptacles.

For Unit 2:

Civil
- Remove existing structural steel Containment Recirculation Sump Protective Covers.
- Relocate existing TSP Basket.
- Relocate corner post of Stair Number 4.
- Modify a fire protection piping support.
- Permanently remove existing "HEAR-HERE" Station.
- Modify steel brace on gang support.
- Install Debris Interceptors.
- Relocate instrument air pipe support.

Mechanical
- Re-route instrument air line.
- Vortex suppressor removed from the pump suction piping.
- Install new orifice plates for HHSI Flow Balancing orifices.

- Install new orifice plate in the CTMT floor and equipment drain line.
- Install new orifice plate in the CTMT floor and equipment drain trench.
- Install new HHSI throttle valves.

Electrical

- Remove the "HEAR-HERE" Station.
- Relocate sound power phone jack.
- Relocate Receptacles.
- Relocate containment sump level transmitter.

3.k Sump Structural Analysis

NRC Issue:

The objective of the sump structural analysis section is to verify the structural adequacy of the sump strainer including seismic loads and loads due to differential pressure, missiles, and jet forces.

1) Summarize the design inputs, design codes, loads, and load combinations utilized for the sump strainer structural analysis.

SNC Response 3.k.1:

Strainers and attached piping are designed using the ASME Boiler & Pressure Vessel Code, Section III, 1989 Edition, Subsections NC and ND (welds only) as a guide. Specifically, they are designed in accordance with the vessel design rules of ASME Code Section III, Subsection NC. Piping flange bolts are designed according to Article XIII-1182 of Section III, Appendix XIII of the Code.

Fillet and plug welds between the strainer perforated disks and the support fingers, finger frames, and spacer rings, and between pipes and pipe flanges are designed using the component shear stress limits modified by plug weld and fillet weld efficiency factors obtained from ASME Code Section III, Subsection ND .

Pipe supports and support welds are designed according to Subsection NF design rules for plate and shell type supports.

For the horizontal design strainers:

Material Properties

Strainer components including the tie rods and the attached piping including the assembly bolts are made from SS304, SS304L or SS316. Analyses are conservatively based on strength properties of 304L which has the lowest stress limits of the three materials in the temperature range of interest.

SS304L properties at installation temperature (77°F), standby temperature (120°F), and maximum LOCA temperature (290°F) are listed in Table 3.k.1-H1. These properties are obtained from the ASME Code.

Table 3.k.1-H1 Material Properties

	Installation temp 77°F	**Standby temp 120°F**	**LOCA temp 290°F**
Strainer components and piping - SS304L			
S, stress limit, psi	15700	15700	15340
S_m, stress intensity limit, psi	16700	16700	16700
Sy, yield strength, psi	25000	24260	19320
S_u, Ultimate strength, psi	70000	69240	61430
E, Young's modulus, psi	28.3×10^6	28.1×10^6	27.1×10^6
*α, Coef of thermal expansion, in/in-°F	8.460×10^{-6}	8.60×10^{-6}	8.98×10^{-6}

* Thermal expansion coefficient is mean coefficient with respect to 70°F.

Loads and Load Combinations

The following load combinations were considered in the design margin evaluations.

Design condition	W + OBE + P-design (in air)
Service Level B	W + OBE (in air)
	W + OBE + P-crush (submerged)
	W + OBE + Th expansion (standby condition) (in air)
	W + OBE + P-crush + Th expansion (LOCA) (submerged)
Service Level D	W + SSE (in air)
	W + SSE + P-crush (submerged)

Strainer frequencies are summarized as follows:

	Vibration frequency, Hz	
	Axial	**Lateral**
Dry strainer	40.4	54.6
Wet strainer with debris mass	26.6	41.8

Axial frequency in submerged condition (26.6 Hz) is less than the ZPA frequency. Therefore, the axial seismic loads in submerged condition were taken as 150% of the spectral accelerations at the strainer frequency. Vertical and lateral seismic loads in the submerged condition, and all seismic loads in dry condition, were assumed to equal ZPA.

Loads

The strainers and piping are installed at 77°F and normally operate in isothermal conditions in air at 120°F. There is no differential pressure across the component walls during the standby condition as the strainers form an open system. Only loads acting on the system are the dead weight (W) and the differential thermal expansion (TEop) from the temperature difference between the assembly operating at 120°F and the support floor assumed to remain at 77°F.

During LOCA and post-LOCA operation, the assemblies are assumed to be submerged in 290°F water, debris accumulates at the strainer disks and spacers, and the sump pump operation produces a differential pressure across the strainer and piping walls. Loads acting on the system during the operation are the system weight (W) plus debris weight (WD), differential thermal expansion (TEmax) from the temperature difference between the assembly operating at 290°F and the support floor assumed to remain at 77°F, and the external crush pressure (Pcr) resulting from the pressure drop across the debris. Analyses are based on the hydraulic design requirement of 1.6 psi for the crush pressure. However, based on design margins calculated in the present analyses, the strainer perforated plates have a capability of supporting a crush pressure of 3.2 psi without taking credit for the Wire Cloth which is resistance welded to the perforated plates.

Five Operating Bases Earthquakes (OBE) and one Safe Shutdown Earthquake (SSE) are specified to occur any time during standby condition or during LOCA and post-LOCA operation with 10 load cycles during each event.

In addition to the operational loads described in the previous paragraphs, the piping is to be designed for a design differential pressure (dP) of 10 psi to envelop a possibility of complete blockage of the strainers and sliding joints by debris.

The specified loads are summarized in Table 3.k.1-H2

Load Combinations

The following load combinations envelop the load combinations specified for demonstrating the structural integrity requirements.

Design condition:	W + Pd + OBE
Service Level B	
Normal operation + OBE	W + OBE + TEop
LOCA + OBE	WD + OBE + TEmax + Pcr
Service Level D	
Normal operation + SSE	W + SSE
LOCA + SSE	WD + SSE + Pcr

Table 3.k.1-H2 Specified Loads

	Piping		Strainer			
	dP, psi(1)	**Seismic Load**	**dP, psi(1)**	**Seismic Load**	**Debris Load**	**System Temp, °F(2)**
Design condition	10	Response Spectra	0	Response Spectra	0	120
Standby + OBE	0	Response Spectra	0	Response Spectra	0	120
Standby + SSE	0	2 times Response Spectra	0	2 times Response Spectra	0	120
LOCA + OBE	(3) 1.6	Response Spectra	(3) 1.6	Response Spectra	(4)	290
LOCA + SSE	(3) 1.6	2 times Response Spectra	(3) 1.6	2 times Response Spectra	(4)	290

Note 1: Pressure Differential - External pressure is higher than the internal pressure.
Note 2: Thermal expansion loads are to be based on installation temperature of 77 °F.
Note 3: 1.6 psi pressure specification is based on hydraulic requirements. The design has a capability of supporting 3.2 psi with out taking credit for the Wire Cloth which is resistance-welded to the perforated plates.
Note 4: Each 22-disk 40”× 40” strainer: debris loading = 350 lb.
Each 10-disk 40”× 40” strainer: debris loading = 250 lb.
Each 22-disk 30”× 30” strainer: debris loading = 300 lb.
These specified debris loads were enveloped in the F1 strainer analyses using the following debris loads
Each 22-disk 40"× 40" strainer: debris loading = 1000 lb.
Each 10-disk 40"× 40" strainer: debris loading = 450 lb.

Accelerations used in the analysis are determined by calculating the frequencies of the components and selecting the acceleration from the appropriate curve by entering the curve at that frequency. Calculated frequencies are listed in Table 3.k.1-H3:

Table 3.k.1-H3 Piping Vibration Frequencies

System	Frequency in air, Hz			Frequency in water, Hz			
	Mode 1	Mode 2	Mode 3	Mode 1	Mode 2	Mode 3	Mode 4
U1 RHR A-Train	148.8	156.6	181.0	69.3	74.3	87.7	97.8
U1 RHR B-Train	34.3	51.6	61.3	19.0	28.9	34.8	53.3
U1 CSS A-Train	101.6	136.0	271.8	44.7	61.9	117.5	131.3
U2 RHR A-Train	106.1	129.5	145.3	47.9	57.2	62.0	74.7
U2 RHR B-Train	126.9	148.5	173.2	59.3	71.3	77.6	85.8
U2 CSS A-Train	43.9	84.1	107.0	18.2	36.0	52.4	53.8
U2 CSS B-Train	323.3	503.7	703.1	176.9	304.6	344.4	344.7

For Unit 1: Piping seismic response was calculated in equivalent static analyses using acceleration loads based on the frequencies listed in Table 3.k.1-H3. All frequencies are in Zero Period Acceleration (ZPA) range with the exception of the U1 RHR B-Train piping lateral frequency (19.0 Hz) in water. Therefore, seismic loads for all the three piping systems in air, U1 RHR A-Train and U1 CSS A-Train systems in water, and U1 RHR B-Train system vertical frequency in water are assumed to equal the ZPA values in the 0.5 %-damping response spectra in Figures U1-H1, U1-H2 and U1-H3. Seismic loads in the horizontal directions for U1 RHR B-Train piping in water were assumed to equal 150 % of the spectral accelerations at 19.0 Hz. Spectral acceleration at 19 Hz in the N-S direction, which is larger than the corresponding acceleration in the E-W direction, was used for the piping's weaker direction (perpendicular to the pipe). The smaller acceleration value in the E-W direction was used for the stronger direction (parallel to the pipe). Accelerations were obtained using these approaches are shown in Table 3.k.1-H4.

For Unit 2: Piping seismic response was calculated in equivalent static analyses using acceleration loads based on the frequencies listed in Table 3.k.1-H3. All frequencies are in Zero Period Acceleration (ZPA) range with the exception of the U2 CSS A-Train piping lateral frequency (18.2 Hz) in water. Therefore, seismic loads for all the four piping systems in air, U2 RHR A-Train, U2 RHR B-Train, and U2 CSS B-Train piping systems in water were assumed to equal the ZPA values in the 0.5 %-damping response spectra and equivalent static analyses were used to analyze the system. Loads obtained using these approaches are shown in Table 3.k.1-H4.

Table 3.k.1-H4 OBE Accelerations Based on Piping Frequencies and 0.5% Damping Response Spectra

	Equivalent static acceleration, g					
	Piping in air			Submerged piping		
	N-S	E-W	Vertical	N-S	E-W	Vertical
U1 RHR A-Train	0.05	0.05	0.034	0.05	0.05	0.034
U1 RHR B-Train	0.05	0.05	0.034	0.33	0.19	0.034
U1 CSS A-Train	0.05	0.05	0.034	0.05	0.05	0.034
U2 RHR A-Train	0.05	0.05	0.034	0.05	0.05	0.034
U2 RHR B-Train	0.05	0.05	0.034	0.05	0.05	0.034
U2 CSS A-Train	0.05	0.05	0.034	0.05	0.05	0.034
U2 CSS B-Train	0.05	0.05	0.034	0.05	0.05	0.034

Additional Evaluation Performed for Unit 2:

Analysis Matrix

An analysis matrix was obtained by combining the specified gravity, pressure, thermal, and seismic loads listed in Table 3.k.1-H4. Seismic analyses for submerged conditions require use of hydrodynamic mass as well as the structural mass. The gravity load, on the other hand, acts only on the structural mass. The following approach was used when performing equivalent static analyses for combined gravity, pressure, and seismic loads. The approach avoids multiple analysis models and permits use of the analysis model with only the structural mass (and without hydrodynamic mass) for combined application of gravity and seismic loads for air and water environments. When performing response spectrum analyses for CSS A-Train piping under water, hydrodynamic mass was included in the analysis model.

In equivalent static analyses, seismic load is applied as:

Load = specified acceleration $\times$ $(M + M_H)$

where M = structural mass

M_H = hydrodynamic mass (contained water mass + displaced water mass)

This relation was reformulated as:

$$\text{Load} = \text{specified acceleration} \times [(M + M_H)/M] \times M$$

Denoting the mass ratio as $R = (M + M_H)/M$, the load may be written as:

$$\text{Load} = \text{effective acceleration} \times M$$

where effective acceleration = R × specified acceleration

Mass ratios R for the four piping modules are calculated in Table 3.k.1-H5 based on the structural and hydrodynamic weights calculated by ANSYS.

Table 3.k.1-H5 Mass Ratios (R)

System	Analysis model weight, lb		Mass ratio
	Piping weight, W	Piping + hydrodynamic weight, $W + W_H$	R $= (W+W_H)/W$
U2 RHR A-Train	481	2113	4.393
U2 RHR B-Train	427	1813	4.246
U2 CSS A-Train	477	2275	4.769
U2 CSS B-Train	142	511	3.598

The maximum value Rmax = 4.769 was used together with the accelerations listed in Table 3.k.1-4 to calculate seismic loads for the four piping modules when submerged in water. These loads and the loads in air are listed in Table 3.k.1-H6. These loads were used for OBE analyses. SSE loads were assumed to equal twice the OBE loads.

Table 3.k.1-H6 OBE Acceleration Loads for Piping Equivalent Static Analyses

	Equivalent static acceleration, g					
	Piping in air			*Submerged piping		
	N-S	E-W	Vertical	N-S	E-W	Vertical
Each Strainer	0.05	0.05	0.034	0.24	0.24	0.16

* Submerged piping loads include hydrodynamic mass effects and are used with analysis models without hydrodynamic mass. Response spectrum analyses for CSS A-Train piping used analysis model that included hydrodynamic mass.

Table 3.k.1-H7 shows the analysis matrix obtained by combining the specified pressure and thermal expansion loads with the equivalent seismic loads calculated above.

Table 3.k.1-H7 Piping Analysis Matrix

	(1) Pressure psi	Gravity g	Seismic acceleration load	(2) Thermal expansion °F	(3) Operating temp. °F
Design condition					
1. W+OBE+Pd (int pressure)	10.0	1.0	Table 3.k.1-H6	------	120
Service Level B					
1. W+OBE	-------	1.0	Table 3.k.1-H6	------	120
2. W+OBE+TEnop	-------	1.0	Table 3.k.1-H6	120	120
3. W+OBE +Pcrush	(4) 1.6	1.0	Table 3.k.1-H6	------	290
4. W+OBE+Pcrush+ TEmax	(4) 1.6	1.0	Table 3.k.1-H6	290	290
Service Level D					
1. W+SSE	-------	1.0	2×Table 3.k.1-H6	------	120
2. W+SSE+Pcrush	(4) 1.6	1.0	2×Table 3.k.1-H6	------	290

Notes:
(1) External pressure is higher than the internal pressure.
(2) Thermal expansion loads are based on specified pipe temperature assuming that the support floor remains at 77°F.
(3) Operating temperature used to determine material properties.
(4) 1.6 psi pressure specification is based on hydraulic requirements. The design has a capability of supporting 3.2 psi without taking credit for the Wire Cloth which is resistance-welded to the perforated plates.

For the vertical design strainers:

Material Properties

The strainer FEM is composed of only SA 240, Type 304 material. ASME material properties in Table 3.k.1-V1 were used for this analysis.

Table 3.k.1-V1: Material Properties

Property		Design (70 deg F)	Accident (290 deg F)
Elastic Modulus	psi	2.83E+07	2.70E+07
Coefficient of Thermal Expansion (CTE)	in/in/deg F	8.60E-06	9.20E-06
Poisson's ratio*	-	0.30	0.30
Density*	lb/in^3	0.289	0.289**

*Density and Poisson ratio not available in ASME, Values provided by major steel supplier
** Even though density changes with temperature, since the analysis is linear, the density needs to be kept constant to maintain constant mass

Table 3.k.1-3.k.1-V2: Section of ASME BPVC Section III for CTE

TABLE TE-1 (CONT'D) 04
THERMAL EXPANSION FOR FERROUS MATERIALS

Temperature, °F	Coefficients for Austenitic Stainless Steels (Group 3) [Note (3)]			Coefficients for Other Austenitic Stainless Steels (Group 4) [Note (4)]			Coefficients for Ductile Cast Iron		
	A	B	C	A	B	C	A	B	C
70	8.5	8.5	0	8.2	8.2	0	...	5.7	0
100	8.7	8.6	0.3	8.3	8.2	0.3	...	5.8	0.2
150	9.0	8.8	0.8	8.6	8.4	0.8	...	5.9	0.6
200	9.3	8.9	1.4	8.8	8.5	1.3	...	6.0	0.9
250	9.6	9.1	2.0	9.0	8.6	1.9	...	6.1	1.3
300	9.8	9.2	2.5	9.2	8.7	2.4	...	6.3	1.7
350	10.0	9.4	3.1	9.3	8.8	3.0	...	6.4	2.2
400	10.2	9.5	3.7	9.4	8.9	3.5	...	6.6	2.6
450	10.3	9.6	4.4	9.5	9.0	4.1	...	6.7	3.0

Table 3.k.1-V3: Section of ASME BPVC Section III for E – Modulus

04 TABLE TM-1
MODULI OF ELASTICITY E OF FERROUS MATERIALS FOR GIVEN TEMPERATURES

Materials	Modulus of Elasticity E = Value Given × 10^6 psi, for Temperature, °F, of																	
	−325	−200	−100	70	200	300	400	500	600	700	800	900	1000	1100	1200	1300	1400	1500
Carbon steels with C ≤ 0.30%	31.4	30.8	30.3	29.4	28.8	28.3	27.9	27.3	26.5	25.5	24.2	22.5	20.4	18.0	...	...	...	...
Carbon steels with C > 0.30%	31.2	30.6	30.1	29.2	28.6	28.1	27.7	27.1	26.4	25.3	24.0	22.3	20.2	17.9	15.4	...	...	...
Material Group A [Note (1)]	31.1	30.5	30.0	29.0	28.5	28.0	27.6	27.0	26.3	25.3	23.9	22.2	20.1	17.8	15.3	...	...	...
Material Group B [Note (2)]	29.6	29.0	28.6	27.8	27.1	26.7	26.2	25.7	25.1	24.6	23.9	23.2	22.4	21.5	20.4	19.2	17.7	...
Material Group C [Note (3)]	31.6	30.9	30.5	29.6	29.0	28.5	28.0	27.4	26.9	26.2	25.6	24.8	23.9	23.0	21.8	20.5	18.9	...
Material Group D [Note (4)]	32.6	31.9	31.4	30.6	29.9	29.4	28.8	28.3	27.7	27.0	26.3	25.6	24.7	23.7	22.5	21.1	19.4	...
Material Group E [Note (5)]	33.0	32.4	31.9	31.0	30.3	29.7	29.2	28.6	28.1	27.5	26.9	26.2	25.4	24.4	23.3	22.0	20.5	...
Material Group F [Note (6)]	31.2	30.7	30.2	29.2	28.4	27.9	27.3	26.8	26.2	25.5	24.5	23.2	21.5	19.2	16.5	...	...	...
Material Group G [Note (7)]	30.3	29.7	29.2	28.3	27.5	27.0	26.4	25.9	25.3	24.8	24.1	23.5	22.8	22.0	21.2	20.3	19.2	18.1
S13800 [Note (8)]	31.5	30.9	30.3	29.4	28.7	28.1	27.5	26.9	26.3	25.7	25.0	24.4	...	...	...	...	...	...
S15500 [Note (9)]	30.5	29.9	29.4	28.5	27.8	27.2	26.7	26.1	25.5	24.9	24.3	23.7	...	...	...	...	...	...
S45000 [Note (10)]	31.6	31.0	30.4	29.5	28.8	28.2	27.6	27.0	26.4	25.8	25.1	24.5	...	...	...	...	...	...
S17400 [Note (11)]	30.5	29.9	29.4	28.5	27.8	27.2	26.7	26.1	25.5	24.9	24.3	23.7	...	...	...	...	...	...
S17700 [Note (12)]	31.6	31.0	30.4	29.5	28.8	28.2	27.6	27.0	26.4	25.8	25.1	24.5	...	...	...	...	...	...
S66286 [Note (13)]	31.0	30.6	30.2	29.2	28.5	27.9	27.3	26.7	26.1	25.5	24.9	24.2	...	...	...	...	...	...

696 2004 SECTION II

Load Combinations

Table 3.k.1-V4 shows the load combinations specified for the FNP passive suction strainer design. The analyzed condition Pcr +WD +OBE is the bounding load combination in comparison to Pcr +WD.

Table 3.k.1-V4 Load Combinations for FNP Strainer Design

Service Level	Load Combination
Design	$W + P_o + OBE_1$
Level B	$W_D + P_d + OBE_2 + TE_{max} + P_{cr}$
Level D	$W_D + P_d + SSE_2 + P_{cr}$

Nomenclature:

W	Weight (Dry strainer Assembly Weight)
W_D	Weight + Debris Weight + Hydrodynamic Mass (LOCA Event with Strainer in Water)
Pcr	Crush Pressure (During Suction Strainer Operation in Water-Post LOCA)
Pd	Design Pressure (LOCA Event) + Water Head (Strainer Open System)
Po	Design Pressure (Strainer Open System)
OBE_1	Operating Basis Earthquake, (Inertia Load in Air)
OBE_2	Operating Basis Earthquake, (Inertia Load with Strainer in Water-Include Debris Weight + Hydrodynamic Mass)
TEmax	Thermal Expansion (Accident Condition)
SSE_1	Safe Shutdown Earthquake (Inertia Load with Strainer in Air)
SSE_2	Safe Shutdown Earthquake (Inertia Load with Strainer in Water-Include Debris Weight + Hydrodynamic Mass)

Loads

The loads on the strainer consist of the crush pressure acting across the strainer plates (accounting for debris blockage) as well as the plenum, during the steady state pump operation after the accident, strainer weight, debris weight and hydrodynamic mass during seismic event, and thermal expansion load (Accident Condition). The seismic loads are based on the lateral and vertical inertial accelerations of the Response Spectrum according to the first mode of frequency of the strainer assembly in water. Conservatively, the same value is applied when the strainer is operating in air (Design Condition) since the strainer first mode frequency is higher in air than in water providing lower G values from the seismic response spectrum. The design pressure, Po or Pd, has no impact on the system because the strainer is an open system.

The vertical strainer has a dry weight of approximately 4,100 lbs. The strainer assembly model in water, WD, is calculated to be approximately 8,100 lbs with debris weight of 1,000 lbs and hydrodynamic mass of approximately 1,300 lbs.

The combined loads for strainer component evaluation are summarized in Table 3.k.1-V5. For the design load case, the strainer weight in air or 1G is combined with the OBE vertical acceleration. In addition, OBE horizontal acceleration is applied in both NS and EW lateral directions. For the Level B load case, the strainer weight in water including debris and hydrodynamic mass is combined with the OBE vertical acceleration. In addition, OBE

horizontal acceleration is applied in both NS and EW lateral directions (along X & Z axis of the model, respectively) as well as crush pressure and thermal loading. For the Level D, the seismic acceleration values (SSE) are 2 times of those for OBE.

Table 3.k.1-V5 Load Table for the FNP Strainer Design

Service Level	Load Combination	Inertia x (NS)	Inertia Y (Vertical)	Inertia Z (EW)	Pcr	ΔTemp**
		(G)	(G)	(G)	(psi)	(deg F)
Design	W + Po + OBE1	0.10	0.05	0.05	-	
Level B**	WD + Pd + OBE2 +TEmax + Pcr	0.15	0.40	0.11	1.6*	220
Level D**	WD + Pd + SSE2 + Pcr	0.30	0.80	0.22	1.6*	

*Equivalent to 3.7 ft of head loss
**Stress free temperature is assumed to be 70 °F, ΔT = (290-70) °F = 220 °F
NOTE: Factor 1.5 for static coefficient approach is not included in this table but is applied in the analysis

The structural response due to OBE & SSE is different depending on whether the strainer is in air or in water. The corresponding structural response is denoted by subscript 1 & 2 when the strainer is in air or in water, respectively. During normal plant operation when the strainer is not working, the strainer structural response due to OBE/SSE is denoted as OBE1/SSE1. During LOCA event when the strainer is working, the strainer structural response due to OBE/SSE is denoted as OBE2/SSE2. The difference is due to the added debris weight and hydrodynamic mass during seismic event to the strainer assembly. The spectrum response curve was used to extract acceleration values.

To calculate seismic loads, the static coefficient method was used. This approach is appropriate since the lowest frequencies (in water) are found to be on the right hand side of the peak value. Since the Natural frequencies are below the ZPA value, the acceleration values are multiplied by a factor of 1.5 to account for contribution of other modes as recommended by the NRC.

2) Summarize the structural qualification results and design margins for the various components of the sump strainer structural assembly.

SNC Response 3.k.2:

Information for the horizontal and vertical strainer designs is provided in separate sections below.

For the horizontal design strainers:

Three horizontal strainers are installed on Unit 1 and four on Unit 2.

Strainers and attached piping are designed using the ASME Code as a guide. Specifically, they are designed following the vessel design rules of ASME Code Section III, Subsection NC. Piping flange bolts are designed according to Article XIII-1182 of Section III, Appendix XIII of the Code. Stress limits for strainers, piping and bolts are summarized in Table 3.k.2-H1.

Fillet and plug welds between the strainer perforated disks and the support fingers, finger frames, and spacer rings, and between pipes and pipe flanges are designed using the component shear stress limits modified by plug weld and fillet weld efficiency factors obtained from ASME Code Section III, Subsection ND. Weld efficiency factors are summarized in Table 3.k.2-H2.

Pipe supports and support welds are designed according to Subsection NF design rules for plate and shell type supports. Stress limits for the supports and support welds are summarized in Table 3.k.2-H3.

Stress limits and design margins for the 40x40 and 30x30 inch strainers are provided in Tables 3.k.2-H4 – 3.k.2-H9.

Stress limits and design margins for miscellaneous components are provided in Table 3.k.2-H10.

Table 3.k.2-H1 Strainer and Piping Stress Limits

Service level	Stress category	Stress limit
Design condition	σ_m	1.00 S_m
	$\sigma_m + \sigma_b$	1.50 S_m
Service Level B	σ_m	1.10 S_m
	$\sigma_m + \sigma_b$	1.65 S_m
	$\sigma_m + \sigma_b + Q$	3.00 S_m
	Shear stress	0.6 S_m
	Bearing stress	S_y (limit near free edge used)
	Fatigue usage	1.0
Service Level D	σ_m	2.00 S_m
	$\sigma_m + \sigma_b$	3.00 S_m
Bolts	σ_m	2.00 S_m
	$\sigma_m + \sigma_b$	3.00 S_m

σ_m Primary membrane stress intensity
σ_b Primary bending stress intensity
Q Secondary stress intensity range
S_m Stress intensity limit
S_y Yield strength
S Bolt stress limit

Table 3.k.2-H2 Weld efficiency Factors (Strainer and Piping Welds)

Weld	Weld type	Joint efficiency factor(1)
Perforated plates to fingers	Plug weld	0.80×0.80×1.00 = 0.64
Perforated plates to finger frames	Intermittent fillet weld	0.80×0.85×1.00 = 0.68
Perforated plates to perforated spacer rings	Intermittent fillet weld	0.80×0.85×1.00 = 0.68
Pipe to flange	Continuous fillet weld(2)	0.80×0.85×0.75 = 0.51

(1) Joint efficiency factors are based on footnote (2) of ASME Section III, ND-3923.1-1:

shear strength of weld material		0.80
efficiency factor	- plug welds	0.80
	- fillet welds	0.85
loading factor	- perpendicular	1.00
	- parallel	0.75

(2) The joint efficiency factor for continuous fillet weld is smaller than that for intermittent welds because of the loading direction relative to the weld line.

Table 3.k.2-H3 Pipe Support Stress Limits

Service level	Stress category	Stress limit
Design condition	σ_1	1.00 S
	$\sigma_1 + \sigma_2$	1.50 S
	Fillet weld shear stress	S_{weld}
Service Level B	σ_1	1.33 S
	$\sigma_1 + \sigma_2$	2.00 S
	Fillet weld shear stress	Min (1.33 S_{weld}, 0.42 S_u)
Service Level D	σ_m	Min(max(1.2S_y,1.5S_m),0.7S_u)
	$\sigma_m + \sigma_b$	Min(max(1.8S_y,2.25S_m),1.05S_u)
	Fillet weld shear stress(1)	Min (1.50 S_{weld}, 0.42 S_u)

σ_1 Primary membrane stress
σ_2 Primary bending stress
S Stress limit
S_u Ultimate strength
S_{weld} 21000 psi (for base material with 58000 psi < S_u < 70000 psi)
(1) Service Level C weld stress limit used for Service Level D

Table 3.k.2-H4 40x40 Strainer and Piping Minimum Design Margins (Design Condition: W+OBE+Pd)

Component	*Stress for each Category psi		**Design Margin for each Category	
	σ_m	$\sigma_m + \sigma_b$	σ_m	$\sigma_m + \sigma_b$
Perforated disks	801	806	19.8	30.1
Perforated spacer rings	201	484	82.1	50.8
Finger frames	250	704	65.8	34.6
End frame brackets	297	297	55.2	83.3
End frame channels	123	132	135	189
Strainer end rings	139	139	119	179
Corner spacer rings	185	368	89.3	67.1
Inner spacer rings	121	318	137	77.8
Rails	338	550	48.4	44.5
Support feet	790	1213	20.1	19.7
Piping	4839	8735	>2.44	>1.86

* Stress Category (Limit): σ_m (Sm) 16700 psi
$\sigma_m + \sigma_b$ (1.5 Sm) 25050 psi

** Design Margin = (Limit / calculated value) – 1

Table 3.k.2-H5 40x40 Strainer and Piping Minimum Design Margins (Service Level B: W+WD+OBE+Pcr+TEmax)

Component	*Stress for each Category psi			**Design Margin for each Category		
	σ_m	$\sigma_m + \sigma_b$	$\sigma_m + \sigma_b + Q$	σ_m	$\sigma_m + \sigma_b$	$\sigma_m + \sigma_b + Q$
Perforated disks	1573	18911	19346	10.7	0.46	1.59
Perforated spacer rings	719	3219	5530	24.5	7.56	8.06
Finger frames	1064	1456	3595	16.3	17.9	12.9
End frame brackets	1982	1982	3516	8.27	12.9	13.2
End frame channels	722	735	2004	24.4	36.5	24.0
Strainer end rings	957	957	3376	18.2	27.8	13.8
Corner spacer rings	326	588	1354	55.3	45.9	36.0
Inner spacer rings	440	2049	7640	40.8	12.4	5.56
Rails	463	990	1517	38.7	26.8	32.0
Support feet	1763	2412	2929	9.42	10.4	16.1
Piping	3919	7111	14706	>3.68	>2.86	>2.40

* Stress Category (Limit): σ_m (1.1 Sm) 18370 psi
$\sigma_m + \sigma_b$ (1.65 Sm) 27555 psi
$\sigma_m + \sigma_b + Q$ (3.0 Sm) 50100 psi

** Design Margin = (Limit / calculated value) – 1

Table 3.k.2-H6 40x40 Strainer and Piping Minimum Design Margins (Service Level D: W+WD+SSE+Pcr)

Component	*Stress for each Category psi		**Design Margin for each Category	
	σ_m	$\sigma_m + \sigma_b$	σ_m	$\sigma_m + \sigma_b$
Perforated disks	4304	19445	6.76	1.58
Perforated spacer rings	814	3439	50.0	13.6
Finger frames	2118	2508	14.8	19.0
End frame brackets	3965	3965	7.42	11.6
End frame channels	1015	1052	31.9	46.6
Strainer end rings	1715	1715	18.5	28.2
Corner spacer rings	622	1022	52.7	48.0
Inner spacer rings	800	3874	40.8	11.9
Rails	512	1319	64.2	37.0
Support feet	2671	3814	11.5	12.1
Piping	7020	10014	>3.75	>3.99

* Stress Category (Limit): σ_m (2 Sm) 33400 psi
$\sigma_m + \sigma_b$ (3 Sm) 50100 psi

** Design Margin = (Limit / calculated value) – 1

Table 3.k.2-H7 30x30 Strainer and Piping Minimum Design Margins (Design Condition: W+OBE+Pd)

Component	*Stress for each Category psi		**Design Margin for each Category	
	σ_m	$\sigma_m + \sigma_b$	σ_m	$\sigma_m + \sigma_b$
Perforated disks	512	624	31.6	39.1
Perforated spacer rings	123	325	135	76.1
Finger frames	171	335	96.7	73.8
End frame brackets	176	176	93.9	141
End frame channels	71	83	234	301
Strainer end rings	112	112	148	223
Corner spacer rings	114	211	145	118
Inner spacer rings	94	202	177	123
Rails	185	337	89.3	73.3
Support feet	258	460	63.7	53.5
Piping	4839	8735	>2.44	>1.86

* Stress Category (Limit): σ_m (Sm) 16700 psi
$\sigma_m + \sigma_b$ (1.5 Sm) 25050 psi

** Design Margin = (Limit / calculated value) – 1

Table 3.k.2-H8 30x30 Strainer and Piping Minimum Design Margins (Service Level B: (+WD+OBE+Pcr+TEmax)

Component	*Stress for each Category psi			**Design Margin for each Category		
	σ_m	$\sigma_m + \sigma_b$	$\sigma_m + \sigma_b + Q$	σ_m	$\sigma_m + \sigma_b$	$\sigma_m + \sigma_b + Q$
Perforated disks	752	9497	43961	23.4	1.90	0.14
Perforated spacer rings	1525	2686	44254	34.0	9.26	0.13
Finger frames	357	725	26035	50.5	37.0	0.92
End frame brackets	460	460	7404	38.9	58.9	5.77
End frame channels	699	719	5510	25.3	37.3	8.09
Strainer end rings	420	420	38134	42.7	64.6	0.31
Corner spacer rings	157	326	4064	116	83.5	11.3
Inner spacer rings	313	544	29657	57.7	49.7	0.69
Rails	275	1284	4602	65.8	20.5	9.89
Support feet	521	1840	5919	34.3	14.0	7.46
Piping	3919	7111	14706	>3.68	>2.86	>2.40

* Stress Category (Limit): σ_m (1.1 Sm) 18370 psi
$\sigma_m + \sigma_b$ (1.65 Sm) 27555 psi
$\sigma_m + \sigma_b + Q$ (3.0 Sm) 50100 psi

** Design Margin = (Limit / calculated value) – 1

Table 3.k.2-H9 30x30 Strainer and Piping Minimum Design Margins (Service Level D: W+WD+SSE+Pcr)

Component	*Stress for each Category psi		**Design Margin for each Category	
	σ_m	$\sigma_m + \sigma_b$	σ_m	$\sigma_m + \sigma_b$
Perforated disks	1082	9550	29.9	4.25
Perforated spacer rings	804	2742	40.5	17.3
Finger frames	637	1425	51.4	34.2
End frame brackets	716	716	45.6	69.0
End frame channels	784	811	41.6	60.8
Strainer end rings	661	661	49.5	74.8
Corner spacer rings	193	420	172	118
Inner spacer rings	554	1111	59.3	44.1
Rails	341	2498	96.9	19.1
Support feet	736	3353	44.4	13.9
Piping	7020	10014	>3.75	>3.99

* Stress Category (Limit): σ_m (2 Sm) 33400 psi
$\sigma_m + \sigma_b$ (3 Sm) 50100 psi

** Design Margin = (Limit / calculated value) – 1

Table 3.k.2-H10 Miscellaneous Components Design Margins

Component	Service Level	Stress category	Stress limit Psi		Stress psi	*Design Margin	Comments
Bolts							
Flange at CTMT	B	σ_m	(2 Sm)	33400	3273	9.20	ASME XIII-1182
Support flange	B	σ_m	(2 Sm)	33400	10088	2.31	ASME XIII-1182
Support flange	D	σ_m	(2 Sm)	33400	11660	1.86	ASME XIII-1182
Tie-rods	A	σ_m	(Sm)	16700	9957	0.68	ASME-NC
Welds							
Flange-pipe welds	B	Shear	(0.6 **n**.Sm)	5110	1343	2.80	**n** = 0.51
Strainer plug welds	B	Shear	(0.6 **n**.Sm)	6413	5150	0.25	**n** = 0.64
Pipe supports							
Support column	B	$\sigma_1 + \sigma_2$	(2.0 S)	30680	14468	1.12	ASME-NF
Support column	D	$\sigma_m + \sigma_b$	(2.25 Sm)	37575	17183	1.19	Appendix F
Support column weld	B	Shear	0.42Su	25800	6125	3.21	ASME-NF
Support column weld	D	Shear	0.42Su	25800	7489	2.45	ASME-NF
Angle irons	B	$\sigma_1 + \sigma_2$	(2.0 S)	30680	23669	0.30	ASME-NF
Angle irons	D	$\sigma_m + \sigma_b$	(2.25 Sm)	37575	29371	0.28	Appendix F
Angle iron welds	B	Shear	0.42Su	25800	2253	10.4	ASME-NF
Angle iron welds	D	Shear	0.42Su	25800	2623	8.84	ASME-NF

* Design Margin = (allowable value/calculated value) - 1

For the vertical design strainers:

The stress analyses for the FNP Containment Sump Passive Strainers CSS B-Train on Unit 2 (a vertical strainer design), and the

associated piping and supports which demonstrates the structural integrity of the design for the loads, load combinations, and design limits are specified by the ASME Code Section III, Subsections NC and NF.

The following analysis approach was used:

(a) The crush pressure is the pressure when the suction strainer is operating with full debris load. A crush pressure of 1.6 psi (equivalent to 3.7 feet of head loss) is used for the stress analysis. The crush pressure is also applicable to the plenum.

(b) A finite element model of the strainer assembly is developed using shell and beam elements with the perforated plates modeled as solid plates with equivalent properties. The equivalent solid plate properties are applied for the modal and structural analyses.

(c) Modal frequencies in air and in water are determined according to the seismic analysis requirements (Static or Response Spectra Analysis). The analysis result summarized in Table 3.k.2-V1 below.

Table 3.k.2-V1 Vertical Strainer Weight and Frequency

Mass/ Frequency	Unit	Submerse	in Air
Weight	LB	8102	4129
Mode 1	Hz	26.5	37.0
Mode 2	Hz	27.8	38.9
Mode 3	Hz	31.6	44.2
Mode 4	Hz	38.3	53.5

(d) Various static load cases are performed to determine stresses on key components

(e) Stress results are evaluated according to the ASME Code Section III, Subsection NC and ND Code allowable stress requirements. Acceptable design margins (stress ratios) are summarized for the strainer design (Tables V2 and V3).

A finite element model for the vertical strainer was developed and analyzed using ANSYS 10.0. Finite element analyses have been performed for all components of the vertical strainer. Weld evaluation and reaction loads are summarized using loads from the FE model. The analysis results show that the hardware of the suction strainer design meet the stress limits of the ASME Boiler &

Pressure Vessel Code, Section III, 1989 Edition, Subsections NC and ND (welds only) as applicable.

Table 3.k.2-V2 Stress Ratio Summary for Strainer Components based on ASME Subsection NC

Component	Service Level	Design Margin*
Disk Sets	Design Level	4.7
Plenum		4.5
Disk Sets	Level B	5.9
Plenum		2.7
Disk Sets	Level D	6.2
Plenum		3.7

* Design Margin = (allowable value/calculated value) - 1

Table 3.k.2-V3 Stress Summary for Welds based on Service Level D Load

Weld Location	Weld Stress (ksi)	Allowable Stress** (ksi)	Design Margin*
Plenum Base	< 2.25	9.9	> 3.4
Ring Flange	0.5	9.9	18.8
Perforated Plate to Finger		8.6	>> 1
Perforated Plate to Frame		8.6	>> 1

* Design Margin = (allowable Value/calculated value) – 1

** Conservative Level A Stress Limits, ASME Code Section III, Sub ND-3923 290°F

Table 3.k.2-V4: Stress Ratios

Service Level	Service Level	Stress Limit (ksi)		Stress (ksi)	Design Margin*
*Disk Sets (Perforated)**	*Design*	S	16.6	2.9	4.7
Disk Sets (other)		S	16.6	3.5	3.7
Plenum		S	16.6	3.0	4.5
*Disk Sets (Perforated)**	*Level B*	1.1 S	18.3	2.6	5.9
Disk Sets (other)		1.1 S	18.3	4.4	3.1
Plenum		1.1 S	18.3	5.0	2.7
*Disk Sets (Perforated)**	*Level D*	2.0 S	33.2	4.6	6.2
Disk Sets (other)		2.0 S	33.2	6.1	4.4
Plenum		2.0 S	33.2	7.0	3.7

* Stress values for perforated materials are multiplied by 1.92 to account for the solid plate representation of the perforated plate in the FE model (see Ref. 5).

Table 3.k.2-V5: Summary of Anchor Bolt utilization

Bolt #	Utilization*
1	58%
2	83%
3	47%
4	59%
5	58%
6	42%
7	37%
8	37%
9	37%
10	41%
11	59%
12	60%
13	47%
14	81%
15	58%

Bolt configuration shown in appendix D

$$* \eta = \frac{Calculated\ Shear}{Shear\ Allowabe} + \frac{Calculated\ Tension}{Tension\ Allowabe}$$

Based on the installation specification, the torque on the tie rod is 20 lbf-ft. This is equivalent to a pre-tension load of approx. 1,829 lbf. Since the largest stress from applied load SSE (approx. 700 psi in 0.75" diameter portion, 2.4 ksi in 0.39" in minimum thread diameter) is significantly lower that the pre-tension stress.

3) Summarize the evaluations performed for dynamic effects such as pipe whip, jet impingement, and missile impacts associated with high-energy line breaks (as applicable).

SNC Response 3.k.3:

Due to the location of the strainers there are no dynamic effects from high energy line breaks, pipe whip, jet impingement or missile impact that affect the strainers.

4) If a back flushing strategy is credited, provide a summary statement regarding the sump strainer structural analysis considering reverse flow.

SNC Response 3.k.4:

Back flushing of the CTMT sump strainers is not credited in the FNP analysis.

3.I Upstream Effects

NRC Issue:

The objective of the upstream effects assessment is to evaluate the flowpaths upstream of the containment sump for holdup of inventory which could reduce flow to and possibly starve the sump.

1) Summarize the evaluation of the flow paths from the postulated break locations and containment spray wash down to identify potential choke points in the flow field upstream of the sump.

SNC Response 3.I.1:

Evaluations of containment along with review of the CFD model indicate no significant areas will become blocked with debris and hold up water during the sump recirculation phase. The area of the refueling cavity, which is the area around the reactor head that is flooded prior to fuel movement, is the only significant area in containment that can retain water during an event that requires containment spray. SNC has modified the reactor cavity drain covers to be removed after each refueling. This provides a large clear flow path that can not be easily blocked with debris. Since FNP is mostly a RMI plant, any RMI that is blown into the cavity would tend not to be flat and thus would not be expected to block both drains.

The location of the postulated limiting LOCA is inside the secondary shield wall in the lower elevations of the containment. The flow path from this break area to the sump strainers is primarily through two labyrinth egress points through the shield wall. These walkways provide a large, clear flow path from inside the shield wall to the strainer area. There are also smaller openings through the shield wall for pipes but these are much smaller that the walkways and any restriction of these would have minimal effect on the overall flow path from inside the shield wall to the strainers.

Containment spray wash down has a clear path to the containment sump area. Large sections of the flood on each level in containment are covered with grating that allows the water to pass. Water that falls into the refueling cavity exit via the cavity drains to the sump.

2) Summarize measures taken to mitigate potential choke points.

SNC Response 3.I.2:

Visual inspections were performed on each unit to identify potential choke point for water flowing to the sumps. SNC identified and modified the reactor cavity drain covers to be removed prior to the unit returning to power after each refueling.

3) Summarize the evaluation of water holdup at installed curbs and/or debris interceptors.

SNC Response 3.I.3:

There are no curbs that provide water volume holdup in the FNP containments. The installed debris interceptors are 25 inches high which is well below the calculated minimum water level of 54 inches. Complete blockage of these will not significantly impeded flow to the screens.

4) Describe how potential blockage of reactor cavity and refueling cavity drains has been evaluated, including the likelihood of blockage and the amount of expected holdup.

SNC Response 3.I.4:

The refueling cavity drains were identified as a point that required modification at FNP. The covers on these drains are removed prior to entry into Mode 4 and above to prevent small pieces of debris from covering the drains. The drains are 6 inch pipes with approximately 8 inch inlets. There are two drains located approximately 12 feet apart and are in the vicinity of the containment fuel handling up-ender frame, which would tend to prevent any large debris from landing to cover the drains. The FNP limiting break occurs under the operating deck and inside the secondary shield wall. This break would result in a torturous path for large debris to travel above the operating deck and land in the refueling cavity. Therefore, the clogging of the reactor cavity drains is not postulated.

The drains into the area under the reactor (reactor cavity) could become blocked. There is no detrimental impact of this blockage as it would inhibit loss of water from the active ECCS sump to an inactive area beneath the vessel. The ECCS sump level analysis assumes this area floods during the event.

3.m Downstream Effects - Components and Systems

NRC Issue:

The objective of the downstream effects, components and systems section is to evaluate the effects of debris carried downstream of the containment sump screen on the function of the ECCS and CSS in terms of potential wear of components and blockage of flow streams. Provide the information requested in GL 04-02, "Requested Information," Item 2.(d)(v) and 2.(d)(vi) regarding blockage, plugging, and wear at restrictions and close tolerance locations in the ECCS and CSS downstream of the sump.

1) If NRC-approved methods were used (e.g., WCAP-16406-P with accompanying NRC SE), briefly summarize the application of the methods. Indicate where the approved methods were not used or exceptions were taken, and summarize the evaluation of those areas.

AND

2) Provide a summary and conclusions of downstream evaluations.

SNC Response 3.m.1 and 3.m.2:

The FNP downstream effects evaluation uses the methodology presented in WCAP-16406-P Revision 1 to evaluate the ECCS and CSS components.

In response to GSI-191 and NRC GL 2004-02, Westinghouse has evaluated the downstream impact of sump debris on the performance of the ECCS and CSS following a LOCA at FNP Units 1 and 2. The effects of debris ingested through the containment sump strainer during the recirculation mode of the ECCS and CSS include erosive wear, abrasion, and potential blockage of flow paths. The smallest clearance found for the FNP Units 1 and 2 heat exchangers, orifices, and spray nozzles in the recirculation flow path is 0.375 inches (3/8") for the containment spray nozzles. No blockage of the ECCS flow paths is expected with a sump strainer hole size of 0.09375 inch (3/32").

The instrumentation tubing is also evaluated for potential blockage of the sensing lines. The transverse velocity past this tubing is determined to be sufficient to prevent debris settlement into these lines, so no blockage will occur. The reactor vessel level instrumentation system (RVLIS) is also evaluated. The FNP RVLIS is a Combustion Engineering (CE) design and so no effect on its performance is expected by the debris. (Section 8.6.8 of WCAP-16406-P reference 34).

The FNP heat exchangers, orifices, and spray nozzles were evaluated for the effects of erosive wear for a debris concentration of 764.47 ppm over the mission time of 30 days. The erosive wear on these components is determined to be insufficient to affect the system performance.

For pumps, the effect of debris ingestion through the sump strainer on three aspects of operability, including hydraulic performance, mechanical shaft seal assembly performance, and mechanical performance (vibration) of the pump, were evaluated. The hydraulic and mechanical performances of the pump were determined to not be affected by the recirculating sump debris. The mechanical shaft seal assembly performance evaluation resulted in the one action item with the suggested replacement of the RHR pumps' carbon/graphite backup seal bushings with a more wear resistant material, such as bronze. However, FNP has an Engineered Safety Feature (ESF) atmospheric filtration system in its auxiliary building and this action is not required.

Evaluations of the system valves showed that the minimum recirculation flow rates are adequate to preclude debris sedimentation in all cases. All of the valves that are subject to being blocked pass the plugging criteria at their current positions, since the strainer mesh size is smaller than the minimum valve clearance. All of the valves that are subject to erosion pass the acceptable criteria for the mission time of 30 days.

In order to evaluate the plugging on the equipment within the ECCS and CSS recirculation flow paths, the clearances within the components are compared to the maximum debris size expected to be ingested through the sump strainer. The wear evaluation on this equipment is performed using the wear models developed in WCAP-16406-P, Revision 1.

3) Provide a summary of design or operational changes made as a result of downstream evaluations.

SNC Response 3.m.3:

The Unit 1 ECCS branch flow throttle valves have been replaced and the Unit 2 throttle valves are planned for fall 2008 replacement. Three of the 12 valves replaced on Unit 1 were determined to have clearances of approximately 106 % of the strainer hole size while the other nine valves all have clearances greater than 110 %. A FNP specific evaluation was performed to evaluate this deviation from the guidance of WCAP-16406-P. The conclusion drawn from this evaluation is that deformable debris that may pass through the replacement sump strainer at Plant FNP Unit 1 will also pass through the three high pressure safety

injection valves of interest and will not cause blockage of these valves.

3.n Downstream Effects - Fuel and Vessel

NRC Issue:

The objective of the downstream effects, fuel and vessel section is to evaluate the effects that debris carried downstream of the containment sump screen and into the reactor vessel has on core cooling.

1) Show that the in-vessel effects evaluation is consistent with, or bounded by, the industry generic guidance (WCAP-16793), as modified by NRC staff comments on that document. Briefly summarize the application of the methods. Indicate where the WCAP methods were not used or exceptions were taken, and summarize the evaluation of those areas.

SNC Response 3.n.1:

Per WCAP-16793 (reference 33), reasonable assurance of long-term core cooling for all plants is demonstrated by the following:

1. The size of holes in replacement sump screens designs limits the size of debris that is passed through the screen during operation of the ECCS in the recirculation mode.

2. Based on available test observations, the characteristic dimension of this debris is typically less than the screen hole size, even for fibrous debris. Consequently, debris buildup at critical locations in the reactor vessel and core is not expected.

3. Based on data presented internationally during the resolution of the BWR strainer performance concerns, fibrous debris was observed to not strongly adhere to fuel cladding. Thus, the small size of the debris and its tendency to not adhere to fuel indicates that long-term core cooling of the fuel will not be impaired by either the collection of fibrous and particulate debris in fuel elements, or by the collection of fibrous debris on fuel cladding surfaces.

4. Supporting calculations have demonstrated long-term core cooling will be maintained with about 99.4% of the core blocked. The cladding temperature response to blockage at grids and the collection of precipitation on clad surfaces was also demonstrated to be acceptable with resulting cladding temperatures less than 400°F.

5. A method to evaluate chemical effects on fuel has been developed, applied to several "worst case" plant chemistries and acceptable clad temperatures were calculated.

It is, therefore, concluded that reasonable assurance of acceptable long-term core cooling with debris and chemical products in the recirculating fluid is demonstrated for all plants based on;

1. Items 1 through and including 4, are directly applicable to all PWRs, and,

2. Either a demonstration that the sample calculations identified in Item 5, above, bound the plant-specific chemistry, or the completion of a plant-specific calculation using the method identified in Item 5, above.

SNC is in the process of performing the plant-specific calculation using the method identified in Item 5, above. SNC requested an extension to allow for completion of this calculation until April 30, 2008. This extension request was approved in NRC letter dated December 21, 2007. Information requested for Item 5 will be supplied to the NRC by April 30, 2008.

3.o Chemical Effects

NRC Issue:

The objective of the chemical effects section is to evaluate the effect that chemical precipitates have on head loss and core cooling.

1) Provide a summary of evaluation results that show that chemical precipitates formed in the post-LOCA containment environment, either by themselves or combined with debris, do not deposit at the sump screen to the extent that an unacceptable head loss results, or deposit downstream of the sump screen to the extent that long-term core cooling is unacceptably impeded.

SNC Response 3.o.1:

Summary

General Electric Hitachi (GEH) has recently completed FNP specific LOCA-generated debris head loss testing at Continuum Dynamics Incorporated (CDI) with a prototype module of the GE Stacked Disk Strainer. The types and quantities of chemical precipitates included in the testing were developed based on WCAP-16530-NP. The quantities of chemical precipitates for the FNP containment are as follows:

Calcium Phosphate	0.70 lbs
Sodium Aluminum Silicate	7.22 lbs
Aluminum OxyHydroxide	729.67 lbs

The quantity of chemical precipitate added to the prototype tank testing was scaled from the full plant predicted values above.

The maximum measured head loss was 55.3" at 96.3°F for the full debris plus chemical precipitate loading. The maximum measured head loss for the debris only (no chemical precipitates) was 3" at 93.8° F.

Compared to Bench-Top Testing

Industry data, including benchtop testing, WCAP-16785 and 30 day head loss testing (by others), is being used to support an understanding of chemical product formation, the resulting chemical effect head losses and to facilitate a comparison to plant conditions and NPSH limits. The WCAP-16530 predicted precipitates have been shown to form under unique and differing conditions. Calcium phosphate, which forms as a result of the trisodium phosphate (TSP) buffer addition with the dissolved calcium leaching from the concrete and fiberglass in the low-pH environment, has a retrograde solubility and therefore precipitates almost immediately at high temperatures when the plant is at limiting NPSH margin. Sodium aluminum silicate and aluminum oxyhydroxide precipitate as a result of the pool cooling and the fluid temperature falling below the solubility limit. Although the head losses can be substantial with either precipitate, the aluminum based precipitates occur much later in the 30 day event at cooler temperatures when the plant has significantly more NPSH margin. In these instances, often the structural integrity of the strainer becomes the limiting component over NPSH.

Factoring in this understanding of formation and solubility of the precipitates, FNP has compared the debris head loss with calcium phosphate for NPSH limits at temperature between 212°F to 140°F and debris head loss with the total chemical load (calcium phosphate, sodium aluminum silicate and aluminum oxyhydroxide) to NPSH and strainer structural limits at 140°F and below.

FNP is a TSP plant with a very low fiber load (open strainer areas). FNP has a slightly higher pH (8.6) than most TSP plants (7.4 to 8.0). Given this higher pH, the aluminum corrosion is more significant for FNP coupled with a minimal amount of fiber (silicon), produces a minimal amount of sodium aluminum silicate and generous amount of aluminum oxyhydroxide. Benchtop experiments performed by ALION Science & Technology identified a visible precipitate occurring on or about day 17 at temperatures below 140°F with aluminum concentrations of 150 ppm.

Section 5.4 of WCAP-16785 discusses the solubility of sodium aluminum silicate as a function of temperature for all three buffers. Based on the WCAP results for TSP buffer, the solubility limit of sodium aluminum silicate in TSP buffered solutions at 140°F to 200°F is 40 ppm aluminum and 119 ppm silicon. Thus, based on the WCAP testing, sodium aluminum silicate will not precipitate until the aluminum concentration is above 40 ppm. The benchtop testing performed by ALION Science & Technology for the FNP sump environment has measured an aluminum concentration well over 150 ppm and a silicon concentration less than 10 ppm (due to the high aluminum concentrations potentially inhibiting the silicon dissolution and the general lack of fiber).

The calcium phosphate load predicted at FNP is negligible due to the lack of fiberglass as a major contributor to dissolved calcium (from the WCAP model). Other sources of calcium are concrete, calcium silicate and marinate board. However, FNP does not have calcium silicate or marinate board inside containment. Therefore, the dissolved calcium concentration from the concrete is a relatively low ~0.1 ppm and, consequently, the calcium phosphate load is negligible.

With respect to plans for addressing uncertainties related to head loss from chemical effects including, but not limited to, use of chemical surrogates, scaling of sample size and test durations. FNP has tested with the WCAP based precipitates which have been reviewed and accepted by the Staff for use in resolving the chemical effects impact on debris head loss. The scaling of these precipitates from the plant expected quantities to the prototype testing has been performed on a mass per unit area as with the non-chemical debris loads.

Head Loss Projections based on Temperature

Based on the WCAP precipitates and the timing of the formation of the precipitates, the maximum projected head losses based on the CDI testing with and without chemical precipitates was completed in December 2007 are:

<u>Temperature > 140°F</u>

Module tests at 93.8°F provided a debris head loss of 3" H_2O without chemical precipitates. The calcium phosphate load is 0.70 lbs for the entire replacement strainer and is therefore negligible and provides no increase in head loss over the 3" measured. Adjusting this value based on viscosity to allow comparison to the minimum NPSH at temperature of 212°F, the maximum head loss is:

$$\Delta H_{212} = \Delta H_{94}\left[\frac{\mu_{212}}{\mu_{94}}\right]$$

$$\Delta H_{212} = 3''\left[\frac{0.190}{0.491}\right]$$

ΔH_{212} = 1.2" H_2O

<u>Temperature < 140°F</u>

Module tests at 96.3°F provided a debris head loss of 55.3" H_2O for the total chemical precipitate load. Adjusting this value based on viscosity to the minimum temperature of 120°F, the maximum head loss is:

$$\Delta H_{120} = \Delta H_{96}\left[\frac{\mu_{120}}{\mu_{96}}\right]$$

$$\Delta H_{120} = 55.3''\left[\frac{0.368}{0.480}\right]$$

ΔH_{120} = 42.4" H_2O

The following items are in response to the content guidance for chemical effects provided in Enclosure 3 to a letter from the NRC to NEI dated September 27, 2007 (ADAMS Accession No. ML0726007425).

2) <u>1.d.i Sufficient 'Clean' Strainer Area:</u> Those licensees performing a simplified chemical effects analysis should justify the use of this simplified approach by providing the amount of debris determined to reach the strainer, the amount of bare strainer area and how it was determined, and any additional information that is needed to show why a more detailed chemical effects analysis is not needed.

SNC Response 1.d.i:

SNC has submitted an extension request for completion of chemical effects testing and evaluations until April 30, 2008. NRC approval was received in NRC letter dated December 21, 2007. Information requested in this section will be supplied to the NRC by April 30, 2008.

3) 2.d.i Debris Bed Formation: Licensees should discuss why the debris from the break location selected for plant-specific head loss testing with chemical precipitate yields the maximum head loss. For example, plant X has break location 1 that would produce maximum head loss without consideration of chemical effects. However, break location 2, with chemical effects considered, produces greater head loss than break location 1. Therefore, the debris for head loss testing with chemical effects was based on break location 2.

   SNC Response 2.d.i:

   See response to 1.d.i above.

4) 3.d.i Plant Specific Materials and Buffers: Licensees should provide their assumptions (and basis for the assumptions) used to determine chemical effects loading: pH range, temperature profile, duration of containment spray, and materials expected to contribute to chemical effects.

   SNC Response 3.d.i:

   See response to 1.d.i above.

5) 4.d.i Approach to Determine Chemical Source Term (Decision Point): Licensees should identify the vendor who performed plant-specific chemical effects testing.

   SNC Response 4.d.i:

   See response to 1.d.i above.

6) 5. Separate Effects Decision (Decision Point): State which method of addressing plant-specific chemical effects is used.

   SNC Response 5:

   See response to 1.d.i above.

7) 6.d.i AECL Model: Since the NRC is not currently aware of the testing approach, the NRC expects licensees using it to provide a detailed discussion of the chemical effects evaluation process along with head loss test results.

   SNC Response 6.d.i:

   See response to 1.d.i above.

8) 6.d.ii AECL Model: Licensees should provide the chemical identities and amounts of predicted plant-specific precipitates.

SNC Response 6.d.ii:

See response to 1.d.i above.

9) 7d.i WCAP Base Model: For licensees proceeding from block 7 to diamond 10 in the Figure 1 flow chart [in Enclosure 3 to a letter from the NRC to NEI dated September 27, 2007 (ADAMS Accession No. ML0726007425)], justify any deviations from the WCAP base model spreadsheet (i.e., any plant specific refinements) and describe how any exceptions to the base model spreadsheet affected the amount of chemical precipitate predicted.

SNC Response 7.d.i:

See response to 1.d.i above.

10) 7.d.ii WCAP Base Model: List the type (e.g., AlOOH) and amount of predicted plant-specific precipitates.

SNC Response 7.d.ii:

See response to 1.d.i above.

11) 8.d. WCAP Refinements: State whether refinements to WCAP-16530-NP were utilized in the chemical effects analysis.

SNC Response 8.d:

See response to 1.d.i above.

12) 9.d.i Solubility of Phosphates, Silicates and Al Alloys: Licensees should clearly identify any refinements (plant-specific inputs) to the base WCAP-16530 model and justify why the plant-specific refinement is valid.

SNC Response 9.d.i:

See response to 1.d.i above.

13) 9.d.ii Solubility of Phosphates, Silicates and Al Alloys: For crediting inhibition of aluminum that is not submerged, licensees should provide the substantiation for the following: (1) the threshold concentration of silica or phosphate needed to passivate aluminum, (2) the time needed to reach a phosphate or silicate level in the pool that would result in aluminum passivation, and (3) the amount of containment

spray time (following the achieved threshold of chemicals) before aluminum that is sprayed is assumed to be passivated.

SNC Response 9.d.ii:

See response to 1.d.i above.

14) 9.d.iii Solubility of Phosphates, Silicates and Al Alloys: For any attempts to credit solubility (including performing integrated testing), licensees should provide the technical basis that supports extrapolating solubility test data to plant-specific conditions. In addition, licensees should indicate why the overall chemical effects evaluation remains conservative when crediting solubility given that small amount of chemical precipitate can produce significant increases in head loss.

SNC Response 9.d.iii:

See response to 1.d.i above.

15) 9.d.iv Solubility of Phosphates, Silicates and Al Alloys: Licensees should list the type (e.g., AlOOH) and amount of predicted plant specific precipitates.

SNC Response 9.d.iv:

See response to 1.d.i above.

16) 10. Precipitate Generation (Decision Point): State whether precipitates are formed by chemical injection into a flowing test loop or whether the precipitates are formed in a separate mixing tank.

SNC Response 10:

See response to 1.d.i above.

17) 11.d.i Chemical Injection into the Loop: Licensees should provide the one-hour settled volume (e.g., 80 ml of 100 ml solution remained cloudy) for precipitate prepared with the same sequence as with the plant-specific, in-situ chemical injection.

SNC Response 11.d.i:

See response to 1.d.i above.

18) 11.d.ii Chemical Injection into the Loop: For plant-specific testing, the licensee should provide the amount of injected chemicals (e.g., aluminum), the percentage that precipitates, and the percentage that remains dissolved during testing.

SNC Response 11.d.ii:

See response to 1.d.i above.

19) 11.d.iii Chemical Injection into the Loop: Licensees should indicate the amount of precipitate that was added to the test for the head loss of record (i.e., 100 percent 140 percent).

SNC Response 11.d.iii:

See response to 1.d.i above.

20) 12.d.i Pre-Mix in Tank: Licensees should discuss any exceptions taken to the procedure recommended for surrogate precipitate formation in WCAP-16530.

SNC Response 12.d.i:

See response to 1.d.i above.

21) 13. Technical Approach to Debris Transport (Decision Point): State whether near-field settlement is credited or not.

SNC Response 13:

See response to 1.d.i above.

22) 14.d.i Integrated Head Loss Test with Near-Field Settlement Credit: Licensees should provide the one-hour or two-hour precipitate settlement values measured within 24 hours of head loss testing.

SNC Response 14.d.i:

See response to 1.d.i above.

23) 14.d.ii Integrated Head Loss Test with Near-Field Settlement Credit: Licensees should provide a best estimate of the amount of surrogate chemical debris that settles away from the strainer during the test.

SNC Response 14.d.ii:

See response to 1.d.i above.

24) 15.d.i Head Loss Testing Without Near Field Settlement Credit: Licensees should provide an estimate of the amount of debris and precipitate that remains on the tank/flume floor at the conclusion of the test and justify why the settlement is acceptable.

SNC Response 15.d.i:

See response to 1.d.i above.

25) 15.d.ii Head Loss Testing Without Near Field Settlement Credit: Licensees should provide the one-hour or two-hour precipitate settlement values measured and the timing of the measurement relative to the start of head loss testing (e.g., within 24 hours).

SNC Response 15.d.ii:

See response to 1.d.i above.

26) 16.d. Test Termination Criteria: Provide the test termination criteria.

SNC Response 16.d:

See response to 1.d.i above.

27) 17.d.i Data Analysis: Licensees should provide a copy of the pressure drop curve(s) as a function of time for the testing of record.

SNC Response 17.d.i:

See response to 1.d.i above.

28) 17.d.ii Data Analysis: Licensees should explain any extrapolation methods used for data analysis.

SNC Response 17.d.ii:

See response to 1.d.i above.

29) 18.d. Integral Generation (Alion):

SNC Response 18.d:

See response to 1.d.i above.

30) 19.c.i Tank Scaling / Bed Formation: Explain how scaling factors for the test facilities are representative or conservative relative to plant-specific values.

SNC Response 19.c.i:

See response to 1.d.i above.

31) 19.c.ii Tank Scaling / Bed Formation: Explain how bed formation is representative of that expected for the size of materials and debris that is formed in the plant specific evaluation.

SNC Response 19.c.ii:

See response to 1.d.i above.

32) 20.c.i Tank Transport: Explain how the transport of chemicals and debris in the testing facility is representative or conservative with regard to the expected flow and transport in the plant-specific conditions.

SNC Response 20.c.i:

See response to 1.d.i above.

33) 21.d.i 30-Day Integrated Head Loss Test: Licensees should provide the plant-specific test conditions and the basis for why these test conditions and test results provide for a conservative chemical effects evaluation.

SNC Response 21.d.i:

See response to 1.d.i above.

34) 22.d.i Data Analysis Bump Up Factor: Licensees should provide the details and the technical basis that show why the bump-up factor from the particular debris bed in the test is appropriate for application to other debris beds.

SNC Response 22.d.i:

See response to 1.d.i above.

3.p Licensing Basis

NRC Issue:

The objective of the licensing basis section is to provide information regarding any changes to the plant licensing basis due to the sump evaluation or plant modifications.

1) Provide the information requested in GL 04-02 Requested Information Item 2(e) regarding changes to the plant licensing basis. The effective date for changes to the licensing basis should be specified. This date should correspond to that specified in the 10 CFR 50.59 evaluation for the change to the licensing basis.

SNC Response 3.p.1:

The FNP licensing basis was changed in accordance with the requirements of 10 CFR 50.71. No licensing actions or exemption requests were needed to support changes to the plant licensing basis.

SNC submitted an extension request for the installation of the Safety Injection throttle valves on Unit 2 till the fall of 2008. NRC approval was received in a NRC letter dated August 29, 2007. SNC also submitted an extension request for completion of chemical effects testing till April 30, 2008. NRC approval was received in a NRC letter dated December 21, 2007.

4.0 References

1. NRC GL dated September 13, 2004, Generic Letter (GL) 2004-02, "Potential Impact of Debris Blockage on Emergency Recirculation during Design Basis Accidents for Pressurized-Water Reactors."

2. NEI letter dated December 1, 2004, Nuclear Energy Institute (NEI) document NEI 04-07 Revision 0, "Pressurized Water Reactor Sump Performance Evaluation Methodology."

3. NRC letter dated December 6, 2004, NRC Safety Evaluation by the Office of Nuclear Reactor Regulation Related to NRC Generic Letter 2004-02, Nuclear Energy Institute Guidance Report (Proposed Document Number NEI 04-07), "Pressurized Water Reactor Sump Performance Evaluation Methodology."

4. NRC RG dated November 1, 2003, Regulatory Guide 1.82, "Water Sources for Long Term Recirculation Cooling Following a Loss of Coolant Accident," Revision 3.

5. SNC letter dated February 25, 2005, Joseph M. Farley Nuclear Plant, Vogtle Electric Generating Plant Response to NRC Bulletin [Generic Letter] 2004-02, Potential Impact of Debris Blockage on Emergency Recirculation During Design Basis Accidents at Pressurized-Water Reactors.

6. SNC letter dated August 31, 2005, "Joseph M. Farley Nuclear Plant, Vogtle Electric Generating Plant, September 2005 Response to NRC Generic Letter 2004-02, Potential Impact of Debris Blockage on Emergency Recirculation During Design Basis Accidents at Pressurized-Water Reactors."

7. NRC letter dated February 9, 2006, "Joseph M. Farley Nuclear Plant, Units a and 2, Request for Additional Information RE: Response to Generic Letter 2004-02, Potential Impact of Debris Blockage on Emergency Recirculation During Design Basis Accidents at Pressurized-Water Reactors."

8. NRC letter dated March 3, 2006, "Nuclear Regulatory Commission request for Additional Information to Pressurized Water Reactor Licensees Regarding Responses to Generic Letter 2004-02."

9. NRC letter dated March 24, 2006, "Generic Safety Issue 191 – Assessment of Debris Accumulation on PWR Sump Performance."

10. NRC letter dated March 28, 2006, "Alternative Approach for responding to the Nuclear Regulatory Commission Request for Additional Information Letter RE: Generic Letter 2004-02."

11. NRC letter dated November 14, 2006, "Nuclear Regulatory Commission Request for Additional Information to Pressurized Water Reactor Licensees Regarding Responses to Generic Letter 2004-02."

12. NRC letter dated January 4, 2007, "Alternative Approach for Responding to the Nuclear Regulatory Commission Request for Additional Information Letter Regarding Generic Letter 2004-02."

13. SNC letter dated July 3, 2007, Joseph M. Farley Nuclear Plant – Unit 2, Extension Request for Completion of Corrective Actions Associated with Generic Letter 2004-002."

14. NRC letter dated August 15, 2007, "Content Guide for Generic Letter 2004-02 Supplemental Response."

15. NRC letter dated August 29, 2007, "Generic Letter 2004-02, Potential Impact of Debris Blockage on Emergency Recirculation During Design Basis Accidents at Pressurized-Water Reactors, Extension Request Approval for Joseph M. Farley Nuclear Plant, Unit 2."

16. NRC letter dated September 27, 2007, "Draft Guidance for Review of Finial Licensee Responses to Generic Letter 2004-02, Potential Impact of Debris Blockage on Emergency Recirculation During Design Basis Accidents at Pressurized-Water Reactors."

17. NRC letter dated November 8, 2007, "Plant-Specific requests for Extension of Time to Complete One or More Corrective Actions for Generic Letter 2004-02, Potential Impact of Debris Blockage on Emergency Recirculation During Design Basis Accidents at Pressurized-Water Reactors."

18. NRC letter dated November 13, 2007, "Closure of Generic Safety Issue 191, Pressurized Water reactor Sump Performance."

19. NRC letter dated November 21, 2007, "Revised Content Guide for Generic Letter 2004-02 Supplemental Response."

20. NRC letter dated November 30, 2007, "Supplemental Licensee Responses to Generic Letter 2004-02, Potential Impact of Debris Blockage on Emergency Recirculation During Design Basis Accidents at Pressurized-Water Reactors."

21. SNC letter dated December 7, 2007, "Joseph M. Farley Nuclear Plant – Units 1 and 2, Generic Letter 2004-02 Response Extension Request – Chemical Effects."

22. NRC letter dated December 21, 2007, "Generic Letter 2004-02, Potential Impact of Debris Blockage on Emergency Recirculation During Design Basis Accidents at Pressurized-Water Reactors, Extension Request Approval for Joseph M. Farley Nuclear Plant Units, 1 and 2."

23. NRC letter dated January 31, 2008, "Indian Point Nuclear Generating Unit Nos. 2 and 3 – Draft Open Items from Staff Audit of Corrective Actions to Address Generic Letter 2004-02."

24. NRC letter dated February 4, 2008, "Draft Conditions and Limitations for Use of Westinghouse Topical Report WCAP-16793-NP, Revision 0, Evaluation of Long-Term Cooling Considering Particulate, Fibrous and Chemical Debris in the Recirculating Fluid."

25. Westinghouse WCAP-16568-P, "Jet Impingement Testing to Determine the Zone of Influence (ZOI) for DBA-Qualified / Acceptable Coatings," Revision 0.

26. C.D.I. Report 96-06, "Air Jet Impact Testing of Fibrous and Reflective Metallic Insulation," Revision A, included in Volume 3 of General Electric Document NEDO-32686-A, "Utility Resolution Guide for ECCS Suction Strainer Blockage."

27. NUREG/CR-6808, dated February 1, 2003, "Knowledge Base for the Effect of Debris on Pressurized Water Reactor Emergency Core Cooling Sump Performance."

28. NEI letter dated, September 1, 2002, Nuclear Energy Institute (NEI) Document 02-01, "Condition Assessment Guidelines: Debris Sources Inside PWR Containments," Revision 1.

29. NUREG/CR-6224, "Parametric Study of the Potential for BWR ECCS Strainer Blockage Due to LOCA Generated Debris, Final Report," Issued October 1995.

30. NUREG/CR-3616, dated January 1, 1984, "Transport and Screen Blockage Characteristics of Reflective Metallic Insulation Materials."

31. NUREG/CR-6772, dated August, 1 2002, "GSI-191: Separate Effects Characterization of Debris Transport in Water."

32. Westinghouse WCAP-16568-P, "Jet Impingement Testing to Determine the Zone of Influence (ZOI) for DBA-Qualified / Acceptable Coatings," Revision 0.

33. Westinghouse WCAP-16793-NP, dated May 1, 2007, "Evaluation of Long-Term Cooling Considering Particulate, Fibrous and Chemical Debris in the Recirculating Fluid."

34. Westinghouse WCAP-16406-P, dated August 1, 2007, "Evaluation of Downstream Sump Debris Effects in Support of GSI-191."

35. NUREG/CR-6773, dated 12-01-02, "Integrated Debris-Transport Tests in Water Using Simulated Containment Floor Geometries."

36. NRC letter dated February 4, 2008, "Draft Conditions and Limitations For Use of Westinghouse Topical Report WCAP-16793-NP, Revision 0, Evaluation Of Long-Term Cooling Considering Particulate, Fibrous and Chemical Debris In the Recirculating Fluid.

37. EPRI Report No. 1014883, dated August 1, 2007, "Plant Support Engineering: Adhesion Testing of Nuclear Coating Service Level 1 Coatings."

38. NRC Bulletin 2003-01, dated June 9, 2003, "Potential Impact of Debris Blockage on Emergency Sump Recirculation at Pressurized-Water Reactors."

39. SNC letter dated August 7, 2003, "Joseph M. Farley Nuclear Plant, Vogtle Electric Generating Plant, 60 day Response to NRC Bulletin 2003-01, Potential Impact of Debris Blockage on Emergency Sump Recirculation at Pressurized Water Reactors."

40. SNC letter dated October 29, 2004, "Joseph M. Farley Nuclear Plant, Vogtle Electric Generating Plant, Response to a Request for Additional Information on NRC Bulletin 2003-01, Potential Impact of Debris Blockage on Emergency Sump Recirculation at Pressurized Water Reactors."

41. SNC letter dated November 30, 2004, "Joseph M. Farley Nuclear Plant, Vogtle Electric Generating Plant, Response to a Request for Additional Information on NRC Bulletin 2003-01, Potential Impact of Debris Blockage on Emergency Sump Recirculation at Pressurized Water Reactors."

42. SNC letter dated July 22, 2005, "Joseph M. Farley Nuclear Plant, Vogtle Electric Generating Plant, Response to a Request for Additional Information on NRC Bulletin 2003-01, Potential Impact of Debris Blockage on Emergency Sump Recirculation at Pressurized Water Reactors – Revision 1."

43. NRC letter dated December 14, 2005, " Joseph M. Farley Nuclear Plant, Units 1 and 2 – Response to NRC Bulletin 2003-01, Potential Impact of Debris Blockage on Emergency Sump Recirculation at Pressurized Water Reactors, (TAC Nos. MB9575 and MB9576).

Joseph M. Farley Nuclear Plant
Supplemental Response to NRC Generic Letter 2004-02

Enclosure 3

General Electric Hitachi Nuclear Energy Americas LLC, Affidavit

GE Hitachi Nuclear Energy Americas LLC

AFFIDAVIT

I, Tim E. Abney, state as follows:

(1) I am Vice President, Services Licensing, Regulatory Affairs, GE-Hitachi Nuclear Energy Americas LLC ("GEH"), have been delegated the function of reviewing the information described in paragraph (2) which is sought to be withheld, and have been authorized to apply for its withholding.

(2) The information sought to be withheld is contained in Enclosure 1 of GEH's letter, JB08-KCZZ7-01, J. Betsill to H. Mahan, entitled " GEH Proprietary Mark-ups of Draft SNC Letter NL-07-2173 FNP", dated February 22, 2008. GEH proprietary information in Enclosure 1, which is entitled "GEH Proprietary Mark-ups of Draft SNC Letter NL-07-2173 FNP", is identified by a dotted underline inside double square brackets. [[This sentence is an example. {3}]]. In each case, the superscript notation {3} refers to Paragraph (3) of this affidavit, which provides the basis for the proprietary determination.

(3) In making this application for withholding of proprietary information of which it is the owner or licensee, GEH relies upon the exemption from disclosure set forth in the Freedom of Information Act ("FOIA"), 5 USC Sec. 552(b)(4), and the Trade Secrets Act, 18 USC Sec. 1905, and NRC regulations 10 CFR 9.17(a)(4), and 2.390(a)(4) for "trade secrets" (Exemption 4). The material for which exemption from disclosure is here sought also qualify under the narrower definition of "trade secret", within the meanings assigned to those terms for purposes of FOIA Exemption 4 in, respectively, Critical Mass Energy Project v. Nuclear Regulatory Commission, 975F2d871 (DC Cir. 1992), and Public Citizen Health Research Group v. FDA, 704F2d1280 (DC Cir. 1983).

(4) Some examples of categories of information which fit into the definition of proprietary information are:

a. Information that discloses a process, method, or apparatus, including supporting data and analyses, where prevention of its use by GEH's competitors without license from GEH constitutes a competitive economic advantage over other companies;

b. Information which, if used by a competitor, would reduce his expenditure of resources or improve his competitive position in the design, manufacture, shipment, installation, assurance of quality, or licensing of a similar product;

c. Information which reveals aspects of past, present, or future GEH customer-funded development plans and programs, resulting in potential products to GEH;

d. Information which discloses patentable subject matter for which it may be desirable to obtain patent protection.

The information sought to be withheld is considered to be proprietary for the reasons set forth in paragraphs (4)a. and (4)b. above.

(5) To address 10 CFR 2.390(b)(4), the information sought to be withheld is being submitted to NRC in confidence. The information is of a sort customarily held in confidence by GEH, and is in fact so held. The information sought to be withheld has, to the best of my knowledge and belief, consistently been held in confidence by GEH, no public disclosure has been made, and it is not available in public sources. All disclosures to third parties, including any required transmittals to NRC, have been made, or must be made, pursuant to regulatory provisions or proprietary agreements which provide for maintenance of the information in confidence. Its initial designation as proprietary information, and the subsequent steps taken to prevent its unauthorized disclosure, are as set forth in paragraphs (6) and (7) following.

(6) Initial approval of proprietary treatment of a document is made by the manager of the originating component, the person most likely to be acquainted with the value and sensitivity of the information in relation to industry knowledge, or subject to the terms under which it was licensed to GEH. Access to such documents within GEH is limited on a "need to know" basis.

(7) The procedure for approval of external release of such a document typically requires review by the staff manager, project manager, principal scientist, or other equivalent authority for technical content, competitive effect, and determination of the accuracy of the proprietary designation. Disclosures outside GEH are limited to regulatory bodies, customers, and potential customers, and their agents, suppliers, and licensees, and others with a legitimate need for the information, and then only in accordance with appropriate regulatory provisions or proprietary agreements.

(8) The information identified in paragraph (2), above, is classified as proprietary because it contains detailed results of analytical model and method, as well as testing methods, applied to perform evaluations of emergency core cooling system and containment sprays strainers in Boiling Water Reactors ("BWR") and Pressurized Water Reactors. The development and approval of these models and methods was achieved at a significant cost to GEH, on the order of several million dollars.

The development of the evaluation process along with the interpretation and application of the analytical results is derived from the extensive experience database that constitutes a major GEH asset.

(9) Public disclosure of the information sought to be withheld is likely to cause substantial harm to GEH's competitive position and foreclose or reduce the availability of profit-making opportunities. The information is part of GEH's comprehensive safety and technology base, and its commercial value extends beyond the original development cost. The value of the technology base goes beyond the extensive physical database and analytical methodology and includes development of the expertise to determine and apply the appropriate evaluation process. In addition, the technology base includes the value derived from providing analyses done with NRC-approved methods.

The research, development, engineering, analytical and NRC review costs comprise a substantial investment of time and money by GEH.

The precise value of the expertise to devise an evaluation process and apply the correct analytical methodology is difficult to quantify, but it clearly is substantial.

GEH's competitive advantage will be lost if its competitors are able to use the results of the GEH experience to normalize or verify their own process or if they are able to claim an equivalent understanding by demonstrating that they can arrive at the same or similar conclusions.

The value of this information to GEH would be lost if the information were disclosed to the public. Making such information available to competitors without their having been required to undertake a similar expenditure of resources would unfairly provide competitors with a windfall, and deprive GEH of the opportunity to exercise its competitive advantage to seek an adequate return on its large investment in developing and obtaining these very valuable analytical tools.

I declare under penalty of perjury that the foregoing affidavit and the matters stated therein are true and correct to the best of my knowledge, information, and belief.

Executed on this 22nd day of February 2008.

Tim E. Abney
GE-Hitachi Nuclear Energy Americas LLC

Joseph M. Farley Nuclear Plant
Supplemental Response to NRC Generic Letter 2004-02

Enclosure 4

Lists of Regulatory Commitments

Joseph M. Farley Nuclear Plant
Supplemental Response to NRC Generic Letter 2004-02

Enclosure 4

Lists of Regulatory Commitments

Commitment	Type		Scheduled Completion Date
	One-Time Action	Continuing	
SNC will update the engineering guidance procedure that is part of the design change process to include guidance for reviewing the impact of a proposed change on the documentation that forms the design basis for the response to Generic Letter 2004-02 (section 3.i.3).		X	April 30, 2008
For Chemical Effects Testing and Downstream Effects of Chemical in the Core, FNP will be in compliance with the regulatory requirements listed in the Applicable Regulatory Requirements section of GL 2004-02. Remaining information requested by section 3.n.1 and 3.o will be supplied to the NRC by the scheduled completion date. An exception is the previously approved extension for Unit 2 SI throttle valve replacement scheduled to be completed in the Fall 2008 refueling outage. Extension approved in NRC letter dated August 29, 2007.		X	April 30, 2008