VIRGINIA ELECTRIC AND POWER COMPANY
RICHMOND, VIRGINIA 23261

February 29, 2008

U. S. Nuclear Regulatory Commission
Attention: Document Control Desk
One White Flint North
11555 Rockville Pike
Rockville, MD 20852

Serial No. 08-0018
NLOS/GDM R3
Docket Nos. 50-280/281
License Nos. DPR-32/37

VIRGINIA ELECTRIC AND POWER COMPANY
SURRY POWER STATION UNITS 1 AND 2
SUPPLEMENTAL RESPONSE TO NRC GENERIC LETTER 2004-02
POTENTIAL IMPACT OF DEBRIS BLOCKAGE ON EMERGENCY RECIRCULATION DURING DESIGN BASIS ACCIDENTS AT PRESSURIZED-WATER REACTORS

In a letter dated September 13, 2004, the NRC issued Generic Letter (GL) 2004-02, *Potential Impact of Debris Blockage on Emergency Recirculation during Design Basis Accidents at Pressurized-Water Reactors,* to resolve NRC Generic Safety Issue (GSI) 191, *Assessment of Debris Accumulation on PWR Sump Performance.* The GL identified a potential susceptibility of recirculation flow paths and sump screens to debris blockage. Therefore, the GL requested that addressees perform an evaluation of the emergency core cooling system (ECCS) and containment spray system (CSS) recirculation functions in light of the information provided in the letter and, if appropriate, take additional actions to ensure system function. Additionally, addressees were requested to submit the information specified in the letter to the NRC.

Virginia Electric and Power Company (Dominion) submitted its response to GL 2004-02 in a letter dated March 4, 2005 (04-576), as supplemented by letter dated September 1, 2005 (Serial No. 05-212). In the September 1, 2005 letter, Dominion committed to completing corrective actions for Surry Units 1 and 2 required by GL 2004-02 by December 31, 2007. In a letter dated February 9, 2006, the NRC forwarded a request for additional information (RAI) regarding Dominion's response to GL 2004-02. The NRC requested Dominion's response to the RAI within 60 days. However, in a subsequent letter dated March 28, 2006, as supplemented by a letter dated January 4, 2007, the NRC agreed to an alternative approach and timetable that allowed licensees to submit their responses to the RAIs no later than December 31, 2007 as part of their supplemental responses to GL 2004-02. In a letter dated November 30, 2007, the NRC extended the due date for supplemental responses to February 29, 2008.

This letter provides Dominion's supplemental response to GL 2004-02 for Surry Power Station Units 1 and 2 and includes the necessary information to appropriately address the questions included in the NRC RAI noted above. By letter dated November 15,

A116
NRR

2007, Dominion requested an extension of the completion date for certain GL 2004-02 corrective actions until November 30, 2008. By letter dated December 13, 2007, NRC granted an extension for Surry to May 31, 2008. The corrective actions affected by the extension are noted in the applicable sections of the supplemental response.

In a letter dated August 15, 2007, revised by letter dated November 21, 2007, the NRC provided a content guide to the Nuclear Energy Institute (NEI) for responding to GL 2004-02. Dominion's supplemental response to GL 2004-02 considers the guidance included in the November 21, 2007 revised content guide and is provided in the enclosure.

Should you have any questions or require additional information, please contact Mr. Gary D. Miller at (804) 273-2771.

Sincerely,

Gerald T. Bischof
Vice President – Nuclear Engineering

COMMONWEALTH OF VIRGINIA)
)
COUNTY OF HENRICO)

The foregoing document was acknowledged before me, in and for the County and Commonwealth aforesaid, today by Mr. Gerald T. Bischof, who is Vice President – Nuclear Engineering, of Virginia Electric and Power Company. He has affirmed before me that he is duly authorized to execute and file the foregoing document in behalf of that company, and that the statements in the document are true to the best of his knowledge and belief.

Acknowledged before me this 29th day of February, 2008.

My Commission Expires: August 31, 2008.

MARGARET B. BENNETT
Notary Public 354302
Commonwealth of Virginia
My Commission Expires Aug 31, 2008

Margaret B. Bennett
Notary Public

Commitments: There are no new commitments contained in this letter.

Enclosure: Supplemental Response to Generic Letter 2004-02

cc: U.S. Nuclear Regulatory Commission
Region II
Sam Nunn Atlanta Federal Center
61 Forsyth Street, SW
Suite 23T85
Atlanta, Georgia 30303

Mr. C. R. Welch
NRC Senior Resident Inspector
Surry Power Station

Mr. S. P. Lingam
NRC Project Manager
U. S. Nuclear Regulatory Commission
One White Flint North
Mail Stop O-8 G9A
11555 Rockville Pike
Rockville, Maryland 20852

Mr. R. A. Jervey
NRC Project Manager
U. S. Nuclear Regulatory Commission
One White Flint North
Mail Stop O-8 G9A
11555 Rockville Pike
Rockville, Maryland 20852

ENCLOSURE

SUPPLEMENTAL RESPONSE TO GENERIC LETTER 2004-02

VIRGINIA ELECTRIC AND POWER COMPANY
(DOMINION)
SURRY POWER STATION UNITS 1 AND 2

GL 2004-02 Supplemental Response
Virginia Electric and Power Company (Dominion)
Surry Units 1 and 2

Table of Contents

1.0 Description of Approach for Overall Compliance....2
2.0 General Description Of And Schedule For Corrective Actions....3
3.0 Specific Information Regarding Methodology For Demonstrating Compliance....6
3a - Break Selection....6
3b - Debris Generation/ZOI (excluding coatings)....7
3c - Debris Characteristics....11
3d - Latent Debris....14
3e - Debris Transport....15
3f - Head Loss and Vortexing....24
3g - Net Positive Suction Head (NPSH)....40
3h - Coatings Evaluation....42
3i - Debris Source Term....45
3j - Screen Modification....47
3k - Sump Structural Analysis....51
3l - Upstream Effects....56
3m - Downstream Effects - Components and Systems....57
3n - Downstream Effects – Fuel and Vessel....57
3o - Chemical Effects....60
3p - Licensing Basis....61

Attachment Response to NRC Request for Additional Information

GL 2004-02 SUPPLEMENTAL RESPONSE
SURRY POWER STATION UNITS 1 AND 2

1.0 Description of Approach for Overall Compliance

With the exceptions noted below, Surry Power Station (SPS) Units 1 & 2 has completed the corrective actions associated with Generic Letter (GL) 2004-02, "Potential Impact of Debris Blockage on Emergency Recirculation During Design Basis Accidents at Pressurized-Water Reactors." Corrective actions to evaluate downstream and chemical effects are still in progress as permitted by the NRC in a letter dated December 13, 2007. In that letter, the NRC granted an extension to May 31, 2008, for Surry to complete these remaining corrective actions. The corrective actions affected by the extension are noted in the applicable sections of the supplemental response.

There is reasonable assurance that the SPS Units 1 and 2 Emergency Core Cooling System (ECCS) can provide long-term cooling of the reactor core following a loss of coolant accident (LOCA). The ECCS system can remove decay heat so that the core temperature is maintained at an acceptably low value for the extended period of time required by the long-lived radioactivity remaining in the core. In addition, the Containment Spray Systems (CSS) [i.e., the Containment Spray (CS) and Recirculation Spray (RS) systems] can operate to reduce the source term to meet the limits of 10 CFR 50.67 and remove heat from containment.

Dominion's resolution of the items included in the NRC request for additional information (RAI) dated February 9, 2006, is provided in the attachment.

Methodology of Analyses

The potential for adverse effects of post-accident debris blockage and debris-laden fluids to prevent the recirculation functions of the ECCS and CSS was evaluated for SPS Units 1 and 2. The evaluation considered postulated design basis accidents for which the recirculation of these systems is required. Mechanistic analysis supporting the evaluation satisfied the following areas of the NRC approved methodology in the Nuclear Energy Institute (NEI) 04-07, "Pressurized Water Reactor Sump Performance Evaluation Methodology" Guidance Report (GR), as submitted by NEI May 28, 2004, as modified by the NRC Safety Evaluation (NRC SE), dated December 6, 2004:

Break Selection
Debris Characteristics
Debris Transport
Vortexing
Debris Source Term
Upstream Effects
Debris Generation and Zone of Influence
Latent Debris
Head Loss
Net Positive Suction Head Available
Structural Analysis

Downstream effects analyses (components) are currently being prepared consistent with WCAP-16406-P, Revision 1, "Evaluation of Downstream Sump Debris Effects in Support of GSI [Generic Safety Issue]-191," to identify any wear, blockage or vibration concerns with components and systems due to debris-laden fluids. The downstream effects analyses are currently being revised to incorporate new methodologies provided in WCAP-16406-P, Revision 1, August 2007.

Downstream effects analyses for the fuel and vessel are being prepared consistent with the methodology of WCAP-16793-NP, Rev. 0, "Evaluation of Long-Term Cooling Considering Particulate, Fibrous and Chemical Debris in the Recirculating Fluid," May 2007.

Chemical effects analyses are being performed that use a thorough assessment of existing literature and test data in conjunction with bench scale and reduced scale plant-specific testing.

Coatings are analyzed using a radius of 10-pipe diameters (10D) assigned to the Zone of Influence (ZOI) as detailed in Section 3h for resolution of chemical effects and downstream effects.

2.0 General Description of and Schedule for Corrective Actions

The following modifications have been completed for SPS Units1 and 2 in support of GSI-191 resolution:

1. New containment sump strainers (with corrugated, perforated stainless steel fins) were installed in the containment sump for Unit 1. The total surface area of the RS strainer is approximately 6220 ft^2. The total surface area of the Low Head Safety Injection (LHSI) strainer is approximately 2180 ft^2.

   For Unit 2, a partial strainer has been installed for the RS pumps and a complete strainer has been installed for LHSI pumps. The total surface area of the partial RS strainer is approximately 1238 ft^2. Once fully installed, the RS strainer will have a total surface area of 6260 ft^2. The total surface area of the LHSI strainer is approximately 2230 ft^2.

   These strainers replaced the previous screens, which had a surface area of approximately 158 ft^2.

2. A drain was drilled in the Primary Shield Wall of the Incore Sump Room to reduce the water holdup volume and increase the total volume of water available for recirculation.

3. Engineered Safeguards Features (ESF) circuitry was added to start the RS pumps on a Hi-Hi Containment Pressure Consequence Limiting Safeguards (CLS) signal coincident with a RWST Level Low signal. The Inside RS (IRS) pumps receive an immediate start signal once the coincidence logic is

satisfied. The Outside RS (ORS) pumps start following a timer delay of 120-seconds once the coincident logic is satisfied. These changes ensure sufficient water is available to meet the RS strainer submergence and RS NPSH requirements.

4. In Unit 1, any insulation inside the containment that could contribute to spray or submergence generated debris that was found to be damaged, degraded or covered with an unqualified coating system was removed or jacketed with a jacketing system qualified for a design basis accident (DBA).
5. The containment sump level transmitters were modified to protect them from clogging due to debris.
   - Level transmitters located within the sump have been modified by drilling holes through stilling wells at various places to prevent the element from clogging (for Units 1 and 2), and
   - Level transmitters located above the containment floor have been provided with debris shields to protect them from containment spray generated debris (for Unit 1).

In addition to the modifications listed above, the following actions have been completed:

1. Completed debris generation and debris transport analyses.
   These analyses contain:
   - Break selection criteria
   - Calculation of amount and type of debris generated for limiting breaks
   - Breakdown of debris sizes
   - Physical debris characteristics (i.e. density, fiber size, particulate size)
   - Calculation of amounts of each debris postulated to reach the ECCS strainer
2. Performed an analysis of clogging for components in ECCS and RS flow streams downstream of ECCS and RS strainers.
   - Lists components susceptible to clogging which are in the ECCS and RS flowpaths downstream of the LHSI and RS strainers
   - Demonstration of clogging potential
3. Completed analysis of water hold-up in containment to identify locations where water will be blocked from reaching the RS and LHSI strainers.
4. Revised the SPS Units 1 and 2 Technical Specifications (TS) to increase the containment air partial pressure limits to provide analytical margin, including net positive suction head (NPSH) margin for the RS and LHSI pumps. The TS were also revised to provide new containment sump inspection requirements associated with the new strainers. (Additional supporting TS changes are discussed in Section 3p.)
5. Replaced the LOCTIC containment analysis methodology for analyzing the response to postulated pipe ruptures inside containment, including a LOCA and a main steam line break (MSLB), with the NRC-approved GOTHIC

evaluation methodology discussed in Dominion Topical Report DOM-NAF-3-0.0-P-A. The change to the GOTHIC code provides margin in LOCA peak containment pressure and other accident analysis results.

6. Revised the SPS Units 1 and 2 LOCA Alternate Source Term (AST) analysis to include the effects from changing the RS pump start methodology and from the other modifications associated with the GSI-191 project. The change to the RS pump start methodology results in a short-term increase in air leakage from the containment and a short-term reduction in spray removal of radioactive isotopes from the containment atmosphere.
7. Revised and/or created procedures and programs to ensure that future changes to the plant do not have adverse affects on the ability of the new containment strainers to perform their design function.
8. Trained operators on the operation of the RS and LHSI systems with respect to the new containment strainers.

The following actions are on-going, and updates will be provided in accordance with the extension request granted by the NRC in a letter dated December 13, 2007 for these actions. The extension has been granted until May 31, 2008.

1. Chemical and downstream effects testing evaluation.
2. Chemical effects bench top testing.
3. Chemical effects reduced scale testing.
4. Downstream wear evaluation for components.
5. Downstream wear evaluation for fuel and vessel.
6. Installation of the remaining Unit 2 RS strainer modules.
7. Remediation of containment spray generated debris, Cal-Sil, Asbestos, and Cerafiber (Unit 2).
8. Installation of debris shields over the Unit 2 wide range level transmitters.

3.0 Specific Information Regarding Methodology For Demonstrating Compliance

3a - Break Selection

The break selection methodology is described in Section 3.3.4 of NEI Guidance Report 04-07 and was used in determining break locations for SPS Units 1 and 2. The "limiting" break is identified as the break that results in the type, quantity, and mix of debris generation that is determined to produce the maximum head loss across the sump screen. This means that determining the maximum debris generated by any given break may not result in the maximum head loss. Therefore, the debris types and mix have to be reviewed with the possible break locations and break sizes to determine several possible limiting break locations.

The break selection methodology for determining the SPS Units 1 and 2 break locations was the same as the methodology used for North Anna Power Station (NAPS). The NAPS Unit 2 audit report (ADAMS ML072740400) contains a detailed description of break selection specific to NAPS Unit 2. The NRC reviewed the break selection methodology and results for NAPS Unit 2 and found it acceptable.

To determine the limiting break location, Section 3.3.5 of NEI Guidance Report 04-07 requires the initial break locations to be moved at certain increments along the selected piping. However, the NRC review indicates that "for the purpose of identifying limiting break conditions, a more discreet approach driven by the comparisons of debris source term and transport potential can be effective at placing the postulated breaks." The latter approach was used at SPS in determining the "Limiting Break" locations.

Break locations in the Feedwater (FW) and Main Steam (MS) piping systems (secondary breaks) were not considered, as containment sump recirculation is not required for the mitigation of any FW or MS line breaks. Small bore (<2" diameter) piping breaks were also not evaluated, as they are not bounding as described in Section 3.3.4.1 of the NRC Safety Evaluation for NEI 04-07.

SPS Units 1 and 2 were compared for the purpose of debris generation. The comparison included a review of the equipment location drawings and the Piping and Instrument Diagrams (P&IDs). Based on this review, no significant differences were noted between the two units. Therefore, debris generation was evaluated using SPS Unit 2 as the representative model for both units.

The piping runs considered for breaks are the Reactor Coolant System (RCS) cold legs, hot legs, pressurizer surge line, Safety Injection (SI) cold leg injection lines and the Residual Heat Removal (RHR) pump suction line. Breaks in these lines could decrease RCS inventory and result in ECCS and/or CSS operation in recirculation mode, in which the system pumps would take suction from the containment sump strainers.

Each steam generator (SG) room contains approximately the same amount of equipment and insulated piping; however, the 'A' SG room also contains the neutron shield coolers and piping. The cold leg suction (intermediate legs) pipes are the largest lines (31-inches ID) within the SG loop rooms and would produce the largest zone of influence (ZOI) and consequently the largest amount of debris. Postulating the break (S1) at the SG 'A' connection, in the same SG room as the neutron shield cooler, will likely generate the most insulation debris. Therefore, this break location was analyzed. A break (S3) was also postulated on the intermediate leg in the SG 'C' room. This break would also generate a large amount of debris and is in close proximity to the containment strainer.

The pressurizer is insulated with Transco Thermal-Wrap fiber insulation and is located in a cubicle between elevation 18'-4", and 68'-0" at the top where it is surrounded by a removable block wall and roof. A surge line break (S2) just above the 18'-4" floor elevation within the pressurizer cubicle would potentially generate debris in both the pressurizer cubicle and the pressurizer relief tank (PRT) room in the floor below, since the surge line passes through an open penetration. Additionally, the circular stairway in both the pressurizer cubicle and the PRT room provides a direct flow path to the basement and the strainer. Hence, a break is postulated at the pressurizer surge line just above the PRT room at the 18'-4" elevation.

Therefore, the postulated break locations at SPS are as follows:

- S1 - The SG A cold leg suction (intermediate leg) (31"-RC-2-2501R) piping at the SG nozzle at El. 12'-2" [31" ID]
- S2 - The pressurizer surge line (12"-RC-10-2501R) at El. 18'-4" [12" OD], and
- S3 - The SG C cold leg suction (intermediate leg) (31"-RC-8-2501R) piping at the SG nozzle at El. 12'-2" [31" ID]

3b - Debris Generation/ZOI (excluding coatings)

The objective of the debris generation/zone of influence (ZOI) process is to determine, (1) the zone within which the break jet forces would be sufficient to damage materials and create debris and (2) the amount of debris generated by the break jet forces. The SPS debris generation analytical process followed the methodology described in Sections 3.4 and 4.2.2 of NEI 04-07 and the NRC Safety Evaluation (SE).

The debris generation/ZOI methodology used at SPS Units 1 and 2 was the same as that which was used at North Anna Power Station (NAPS). The NAPS Unit 2 audit report (ADAMS ML072740400) contains a detailed description of debris generation/ZOI methodology specific to NAPS Unit 2. The NRC reviewed the debris generation/ZOI methodology and results for NAPS Unit 2 and found it acceptable. The specifics for SPS are discussed below.

The destruction ZOI is defined as the volume about the break in which the jet pressure is greater than or equal to the destruction damage pressure of the insulation, coatings and other materials impacted by the break jet. The size of the ZOI is defined in terms of pipe diameters of the piping assumed to break. The ZOI is defined as a spherical volume centered at the assumed piping break.

The types of insulation used in the SPS units that are within a potential ZOI include Transco Reflective Metal Insulation (RMI), Tempmat, fiberglass, Thermal Wrap, asbestos, Cal-Sil/asbestos and Paroc (mineral wool). The radii assumed by SPS for insulation ZOI's are shown in Table 3b-1.

Table 3b-1, ZOI Radius for Various Types of Insulation and Fire Stop Material

Insulation	ZOI Radius / Break Diameter
Transco Reflective Metal Insulation (RMI)	2.0
TempMat With Fiberglass Cloth Covering Fiberglass FiberglassTthermal Insulating Wool (TIW) Transco Thermal Wrap	17.0
TempMat with stainless steel mesh covering TempMat with silicone impregnated stainless steel mesh covering TempMat with silicone cloth covering	11.70
Asbestos Asbestos/Calcium Silicate	5.45
Paroc (mineral wool)	5.4
Silicone Foam	28.6

There is no information in either the NEI or NRC documents regarding the appropriate ZOI for some of the insulation materials installed at SPS. The following is a description of the ZOI radius used for materials which did not have a specified ZOI.

The ZOI radius/break diameter ratio for Transco Thermal Wrap is assumed to be equal to unjacketed Nukon (17.0D). This is reasonable since both materials are considered low density fiberglass materials and the ZOI for unjacketed Nukon is in the upper range of tested insulation materials.

The ZOI radius/break diameter ratio for fiberglass is assumed to be equal to unjacketed Nukon (17.0D). This is reasonable since both materials are

considered low density fiberglass materials and the ZOI for unjacketed Nukon is in the upper range of tested insulation materials.

The ZOI radius/break diameter ratio for mineral wool (Paroc) insulation is assumed to be 5.4D. This is based on its similarity to K-wool insulation.

The ZOI radius/break diameter ratio for Tempmat insulation with fiberglass covering is conservatively assumed to be equal to fiberglass (17.0D). This is reasonable since Tempmat is a more dense material than fiberglass and requires a higher destruction pressure.

The ZOI radius/break diameter ratio for Tempmat with silicone cloth covering is assumed to have the same ZOI as Tempmat with stainless steel wire retainer (11.7D). The ZOI for Tempmat with stainless steel wire retainer is determined in the NRC Safety Evaluation to NEI 04-07.

The ZOI radius/break diameter ratio for silicone foam penetration seals is conservatively assumed to be 28.6D. This is the largest ZOI specified in Section 3.4.2.1 of the NRC Safety Evaluation for NEI 04-07.

The SG rooms enclosing each of the RCS loops measure approximately 34 ft. x 50 ft. (at the outside radius). For Tempmat insulation, the minimum ZOI used in SPS debris evaluation is 11.7D. Based on a 31 inch pipe, the ZOI radius of Tempmat is 30.23 ft. Since the ZOI radius for TempMat is 30.23 feet, it is conservatively assumed that all Tempmat insulation within the cubicles becomes debris. Additionally, piping insulation with a ZOI greater than Tempmat will become debris within the SG cubicles.

For insulation with ZOI/ break diameter ratios less than 5.45 (RMI, asbestos, cal-sil/asbestos and Paroc), the piping within the walkdown areas associated with each break was further reviewed to determine which piping actually fell within the ZOI of the break locations. The ZOI for each break location was measured to scale on piping plan and section drawings to determine piping that fell outside the ZOI. Piping that fell completely outside the ZOI was excluded from the amount tabulated for each break.

The debris sources discussed above were increased by approximately 5% for strainer head loss testing.

Foreign materials inside the containment contribute to the total debris generated. Foreign materials are considered valve tags, cable tray tags, conduit tags, stickers, labels and light fixtures. From the walkdown report, the four SPS Unit 1 containment elevations, 47'-4", 18'-4", -3'-6", and -27'-7" were assessed for foreign material.

The metal labels attached with stainless steel banding will remain in place when subjected to the effects of the containment spray when they are attached to components located outside the ZOI of the postulated pipe break. Conversely, these labels will be dislodged when attached to components located within the ZOI. However, since they are metallic and have a higher density (0.29 lbs/in^3) than the sump water, they will not be readily transported to the strainer and are therefore not considered as a debris source.

Based on calculations performed in the Foreign Debris Sources Walkdown Report, the surface area of stickers, labels, tape, etc. inside SPS Unit 1 containment is estimated to be approximately 99 ft^2. In addition, there is also approximately 58 ft^2 of glass. These same values were also used for the Unit 2 containment.

Table 3b-2 lists the debris load for the limiting break locations at SPS. The debris volumes and surface areas listed in Table 3b-2 include approximately 5% margin to account for any miscellaneous, unaccounted for debris that may be subsequently identified, as well as for future maintenance work.

Table 3b-2, LOCA ZOI Generated Debris

Debris Type	Units	Break S1	Break S2	Break S3
Insulation				
Asbestos	ft^3	44.7	0	5.91
Cal-Sil / Asbestos	ft^3	2.15	8.84	33.81
Fiberglass	ft^3	0	4.16	0
Paroc	ft^3	6.10	16.99	3.34
Transco RMI Foil	ft^2	3964	474.6	3964
TempMat	ft^3	57.91	8.42	44.72
Transco Thermal-Wrap Fiber	ft^3	0	113.45	0
Insulation Jacketing				
Metal	ft^2	1074.76	397.45	924.45
Cloth	ft^2	611.58	300.59	558.58
Missile Barrier Penetration Seal				
Silicone Foam	ft^3	2.64	0	18.93
Foreign Materials				
Stickers / Labels	ft^2	104	104	104
Glass	ft^2	61	61	61

3c - Debris Characteristics

The specification of debris characteristics is important to analytical transport and head loss evaluations and to the specification of surrogate materials for head loss testing. The potential LOCA-generated sources of debris for the SPS containment include debris from several types of insulation and fire stop material: Paroc, Transco Thermal Wrap/ Fiberglass, Cal-Sil, Asbestos, Silicon Foam, TempMat and Transco RMI. The potential quantities of debris from these insulation types were shown in section 3b, Table 3b-2. Besides the insulation and fire stop sources described above, other potential debris sources include latent fiber, latent particulate, foreign material debris, and coatings debris.

The methodology used at SPS to determine debris characteristics is similar to that of NAPS, which the NRC reviewed and found to be acceptable during the NAPS Unit 2 audit. The specifics for SPS are provided below.

3c.1 Size Distribution

Transport of debris is strongly dependent on the debris characteristics such as the debris size distribution. Guidance used to determine the debris size categorization at SPS is provided in the NRC SE for NEI 04-07, Sections 3.4.3.3, 3.4.3.2 and Appendices II (Section II.3) and VI (Section VI.3.2).

Table 3c-1, Debris Size Distribution

Debris Type	Category	Category Percent
Asbestos	Small Fines	100%
Cal-Sil	Small Fines	100%
Fiberglass	Small Fines	8%
	Small Pieces	25%
	Large Pieces	32%
	Intact	35%
Paroc	Small Fines	100%
Transco Reflective Metal Insulation	Small Fines	75%
	Large Pieces	25%
TempMat	Small Fines	60%
	Large Pieces	40%
Transco Thermal-Wrap Fiber	Small Fines	8%
	Small Pieces	25%
	Large Pieces	32%
	Intact	35%
Silicone Foam	Small Fines	100%

Section 3.4.3.2 of the NEI guideline suggests a two-category size distribution for material inside the ZOI of a postulated break: small fines and large pieces. The NRC SE for this section states that the two category size distribution is adequate, but can be problematic for debris transport refinements (e.g., a computational fluid dynamics analysis) that more realistically treat the transport process. Therefore, the debris size categorization for Low-Density Fiberglass (LDFG) debris (Transco Thermal Wrap and "fiberglass") uses four categories.

The fraction of insulation within the ZOI that becomes small fines is determined by integrating the insulation damage data versus jet pressures over the ZOI volume. Based on the results of BWR Owner's Group air jet impingement tests (AJITs) and Ontario Power Generation (OPG) debris generation tests, as presented in Appendix VI of the SER and Volume 3 of NUREG/CR-6762, 33% of all fibrous insulation within the ZOI is modeled as becoming fines or small debris. This fraction of fines or small debris is conservatively increased from the value of 22% suggested in Appendix II of the SER based on the OPG debris generation test. The AJIT results indicated that, when insulation was completely destroyed, a maximum of 25% of the insulation was too fine to collect by hand. Thus, 25% of the 33% small debris fraction is modeled as becoming fines (i.e., 8% [0.25*0.33] of the fibrous insulation within the ZOI becomes fine debris when destroyed.) Therefore, 25% [(1-0.25)*0.33] of the fibrous insulation within the ZOI becomes small debris when destroyed.

The remaining 67% of fibrous insulation within the ZOI is modeled as becoming either large debris or remaining intact. To determine the appropriate split between large and intact debris, the results of the AJITs are used. Per the SER guidance provided in Appendix VI, 35% of the fibrous insulation within the ZOI is modeled as intact debris and 32% as large piece debris.

For materials without applicable experimental data, the size distribution was conservatively assumed to be 100% fines. This size distribution applies to asbestos, mineral wool (Paroc) and silicone foam.

3c.2 Density of Debris

The "As Fabricated" and "Material" densities used at SPS were obtained from Table 3-2 of NEI 04-07, which is provided in Table 3c-2.

Table 3c-2, Debris Characteristics

Debris Type	As-Fabricated Density (lb/ft^3)	Material Density (lb/ft^3)
Asbestos	10	153
Cal-Sil	14.5	115
Fiberglass	2.4	159
Paroc	10	90
Transco Reflective Metal Insulation	-	-
TempMat	11.8	162
Transco Thermal-Wrap Fiber	2.4	159

Table 3-2 in NEI 04-07 documents that the as-fabricated density of asbestos ranges from 7 to 10 lb/ft^3. The highest as-fabricated density was conservatively assumed.

The material density used for Cal-Sil was taken from Table 3-2 of NEI 04-07. The value is determined to be a conservative assumption for analytical purposes.

Insulation listed as "fiberglass" is assumed to have the same debris characteristics as Transco Thermal Wrap.

Table 3-2 in NEI 04-07 documents that the as-fabricated density of mineral wool (Paroc) ranges from 4 to 10 lb/ft^3. The highest as-fabricated density was conservatively assumed.

The amount of Transco RMI debris is tabulated based on the amount of surface area. Therefore, the densities of Transco RMI are not listed.

The debris characteristics of silicone foam are not presented in this section as silicone foam does not transport to the containment sump strainer. Therefore, the properties were not needed.

3c.3 Specific Surface Areas for Debris

As the specified surface area of debris is only relevant for head-loss calculations per NUREG/CR-6224, and head-loss evaluations are now being conducted experimentally, the specific surface areas were not determined.

3d - Latent Debris

Latent debris sources were evaluated by containment walkdowns as recommended by Section 3.5.2 of the NEI Guidance and confirmed by the NRC SE. Walkdowns of the Surry Units 1 and 2 containments were conducted to determine the appropriate latent debris amount. The walkdowns conform to the guidance provided in NEI 02-01 with only minor variation. As shown below, three or more samples were collected for most surface types. The additional samples collected for certain surface types increase the statistical accuracy of the evaluation. This approach is considered acceptable based on the similarity of the debris on these surfaces. A listing of the number of each sample type follows.

Number of Samples Collected – Unit 2

Liner	4	HVAC Duct (Vertical)	4
Equipment (Horizontal)	4	Pipe (Horizontal)	4
Equipment (Vertical)	4	Pipe (Vertical)	4
Floor	4	Cable Tray (Horizontal)	4
Wall	4	Cable Tray (Vertical)	4
HVAC Duct (Horizontal)	4	Grating	0

Number of Samples Collected – Unit 1

Liner	4	HVAC Duct (Vertical)	4
Equipment (Horizontal)	4	Pipe (Horizontal)	4
Equipment (Vertical)	4	Pipe (Vertical)	4
Floor	4	Cable Tray (Horizontal)	4
Wall	3	Cable Tray (Vertical)	4
HVAC Duct (Horizontal)	3	Grating	4

The mass of the samples are accurate to 0.01 grams and are used to determine the latent debris mass distribution (g/ft^2). A statistical analysis of the samples is performed in the calculation of latent debris. The analysis determines a 90% confidence limit of the mean value for each type of surface based on a normal distribution. The upper limit of the mean value for each surface type is then applied over the entire surface area of that type throughout containment. This analysis lends further confidence and conservatism to the latent debris mass determination.

The walkdown results determined there are 121 lb_m and 51 lb_m of latent debris in Surry Units 1 and 2, respectively. Conservatively, 121 lb_m of latent debris was used for both units to size the strainers.

Consistent with the NRC SE, 15% of the latent debris load (by mass) is assumed to be fibrous debris and the other 85% (by mass) is treated as particulate debris. Likewise, consistent with the NRC SE, densities of 2.4 lb_m/ft^3 (bulk density) for fibrous debris and 2.7 g/cm^3 for particulate debris are used. As the specific surface area of debris is only relevant for head-loss calculations per

NUREG/CR-6224 and head-loss evaluations are now being conducted experimentally, the specific surface area of latent debris is not determined.

Foreign Materials

Labels, tags, stickers, placards and other miscellaneous or foreign materials were also evaluated via walkdown. Unlike for latent debris, a foreign material walkdown was conducted only for Unit 1. The walkdown determined that Unit 1 contains 99 ft^2 of foreign material and 58 ft^2 of glass. Based upon the similarity of both units, it is reasonable to apply Unit 1's results to Unit 2. An assumed 50% of the transported glass area was used.

A sacrificial area of 150.0 ft^2 is retained on the strainer surface area for labels, tags, stickers, placards and other miscellaneous or foreign materials. This is greater than the recommended 75% of the total foreign material debris area of either unit, as endorsed by the NEI and NRC guidance documents.

The amount of latent debris and foreign material considered for SPS Units 1 and 2 are provided in Table 3d-1.

Table 3d-1, Latent and Foreign Material Debris

Latent and Foreign Material Debris	Unit 1	Unit 2
Latent Debris (lb_m)	127.05	127.05
Fiber (lb_m)	19.06	19.06
Particulate (lb_m)	107.99	107.99
Foreign Material, including glass (ft^2)	164.85	164.85

3e - Debris Transport

Debris transport is conservatively analyzed for SPS consistent with the methodology in NEI 04-07 as approved by the NRC in the staff's SE. The debris transport analysis used at SPS is similar to that used at NAPS. The NRC staff conducted an audit of the NAPS actions to address GL 2004-02, and documented their findings in audit report (ADAMS ML072740400). The audit report contains a detailed description of debris transport for NAPS.

The debris transport evaluation used the guidance provided in the NRC SE in addition to portions of the simple methodology presented in Section 3.6 of NEI 04-07. The blowdown and washdown transport analyses are performed consistent with Section 3.6 of NEI 04-07 and Appendix VI of the SE. Pool fill-up transport analysis is performed consistent with Appendix III of the SE; however, no inactive volumes are modeled. An analytically refined recirculation transport analysis was performed using a computational fluid dynamics (CFD) model of the post-LOCA recirculation flow patterns in containment. Guidance for the recirculation transport analysis is provided in Appendix III of the SE.

The methodology in Appendices III and VI of the SE is for the NRC volunteer plant, which is a plant with a large, dry, cylindrical containment with a hemispherical dome and a 4-loop Westinghouse nuclear steam supply system (NSSS). Since SPS Units 1 & 2 also have dry, cylindrical containments, the overall methodology in Appendices III and VI of the SE was used at SPS.

Blowdown Transport

The blowdown debris transport analysis at SPS is based on the drywell debris transport study (DDTS) for BWRs (NUREG/CR-6369), and Section 3.6.3.2 of NEI 04 -07. This is the same approach used in Appendix VI of the SE.

The SPS Units 1 and 2 containment buildings can be classified as highly compartmentalized; i.e. there are distinct robust structures totally surrounding the major components (steam generators, reactor coolant pumps, etc.) of the RCS. RCS components, with the exception of the pressurizer, are within the SG rooms, but the SG rooms are open to the containment dome above EL. 47'-4". The pressurizer is located in a separate room with an opening in the room floor that connects to the containment annulus.

Even though the Surry containment can be classified as highly compartmentalized, for the purpose of the debris transport evaluation, the containment is considered mostly un-compartmentalized. This approach is justified based on Section 3.6.3.1 of NEI 04-07, which states for breaks not located in the bottom of the compartment or on an upper portion of the compartment (e.g., main steam line break), a mostly un-compartmentalized containment transport analysis should be used. Considering the containment is mostly un-compartmentalized is conservative as all LOCA generated debris is modeled as falling to the containment floor.

The blowdown transport for SPS conservatively postulates that all RMI debris (small and large) falls to the containment floor (i.e., no RMI debris is ejected into the dome). Although NEI 04-07 does not specifically state that all fibrous debris is assumed to fall to the containment floor, it is conservatively modeled as such. Similarly, all calcium silicate and coatings debris are conservatively modeled to fall to the containment floor. Therefore, all LOCA generated debris is modeled as falling to the floor in the post-accident environment. This is reasonable as large debris should be modeled as falling to the containment floor per Section 3.6.3.2 of NEI-04-07, and small debris that could reach the dome would eventually wash down to the containment sump pool.

Washdown (Containment Spray) Transport

Since all LOCA generated debris is conservatively deposited on the floor of containment during blowdown, washdown is not analyzed in detail as part of the debris transport calculation for SPS.

Pool Fill-up Transport

The SPS Units 1 and 2 containments have no significant inactive volumes other than the reactor cavity and containment sump per the general arrangement drawings. For debris to be trapped in the reactor cavity, debris on the containment floor level would have to travel through the incore sump room drain. The drain hole is a 12-inch hole drilled through the primary shield wall plug at elevation (-)25'-0". In order for debris to travel through the incore sump room drain the water level of containment must be above (-)25'-6". Comparing the volume of water needed to reach elevation (-)25'-6" to the small flow area through the primary shield wall drain indicates only a small percentage of debris could travel into the incore sump and remain trapped. As a result, the reactor cavity is considered an active pool. Modeling the reactor cavity as an active pool is conservative since the transport fractions are larger with the cavity modeled as active. The debris transport calculation does not model any inactive volumes, as all inactive volumes are insignificant (small). Modeling all pools active is conservative.

Immediately after a break occurs, water spills from the break to the floor and begins to flood the containment. During this fill-up, the water velocity at the wave front is expected to be much greater than the debris transport velocities, similar to the volunteer plant where the water velocity at the wave front was 2 to 3 m/s (6.6 to 9.8 ft/sec) per Section III.2.2.1 of Appendix III to the SE. This is consistent with integrated debris transport tests documented in NUREG/CR-6773. These tests demonstrated that the primary driver for moving debris during pool formation, especially for large debris, is the sheeting flow as the initial water from the break spreads across the sump floor. Thus, debris initially deposited on the floor is pushed along with the wave front. Therefore, for breaks within the SG rooms, all debris is conservatively transported out of the SG room's interior during pool fill-up transport. It should be noted that most fine debris is not in the pool immediately following a line break, since it is most likely still airborne. Nonetheless, for breaks within the SG rooms, all fine debris is conservatively modeled as transporting out of the SG rooms during pool fill-up. Since all fine debris will be transported during recirculation, this has no impact on the total transport fraction for fine debris to the strainer.

Recirculation Transport

Recirculation transport is the horizontal transport of debris in the active portions of the sump pool by both safety injection flow (from the break) and containment spray flow entering the sump pool and recirculation flow exiting the pool at the

strainer. Debris may be transported along with the water. The quantity and types of debris that will reach the strainer are dependent on the flow velocities and flow patterns and the flow velocity at which debris transport occurs for each type of debris. In order to accurately model the flow velocities to the strainer, a CFD analysis was used.

A three-dimensional CFD model was developed to analyze the flow patterns in the containment sump during post-LOCA recirculation. This model was created using Fluent™ CFD software (Version 3d, segregated, standard k-epsilon, Release 6.1.22). The containment model was developed based on SPS Unit 2. The resulting fluid transport velocities are considered applicable to both SPS units based on the similarity of the containment designs.

There are three different scenarios investigated using the CFD model. The scenarios were chosen to maximize the amount of transported debris to the sump strainer. To maximize the transported debris, break locations from both sides of the sump were modeled to consider transport of debris flowing toward the sump from the opposite directions. In addition to modeling multiple break locations, two different water levels were modeled.

Detailed recirculation transport evaluation using CFD analysis is performed for large-piece RMI and non-fines fibrous debris only. Detailed recirculation transport analyses are not performed for asbestos, calcium silicate, mineral wool, silicone foam, coatings, and latent debris since these materials are modeled as 100% small fines.

The transport properties used for RMI and fibrous debris include the incipient tumbling velocities (transport threshold velocity) and the lift over curb velocities.

The incipient tumbling velocity for RMI and fibrous debris is taken from NUREG/CR-6772, and the incipient tumbling velocity for insulation covers/jacketing is taken from NUREG/CR-3616.

The bottom of the new containment sump strainer is elevated approximately 6 inches above the containment floor. The lift over curb velocities used in the transport analysis are taken from NUREG/CR-6772, which shows test data on the required velocity for fibrous debris and stainless steel RMI foil to lift over 2-inch and 6-inch curbs.

Intact Thermal Wrap and fiberglass debris does not lift over the curb due to its size and lagging. Additionally, there is no available literature regarding the lift over curb velocities for insulation covers/jacketing. Lift over curb velocities for RMI covers are expected to be significantly greater than the lift over curb velocities for RMI foil. Thus, RMI covers will not lift over a curb due to their size and density. As insulation jacketing for other types of insulation (e.g. fiber, etc.) is similar to the covers of RMI insulation, insulation jacketing will not lift over a curb.

The CFD results are presented in Tables 3e-1 and 3e-2. The three CFD scenarios are numbered 5 through 7. Scenarios 1 through 4 were not used in the transport analysis because they were based on a preliminary set of strainer details. The highest continuous velocity connecting the active break and the nearest portion of the strainer is also presented in Tables 3e-1 and 3e-2.

Table 3e-1, Recirculation Non-Fines Debris Transport to Strainer Base Summary

CFD Scenario	Highest Continuous Velocity (ft/s)	Small and Large Piece Fibrous Debris: Transport or No Transport (based on 0.12 ft/sec)	Large Piece Transco RMI: Transport or No Transport (based on 0.28 ft/sec)
Scenario #5	0.59 ft/sec	Transport	Transport
Scenario #6	0.53 ft/sec	Transport	Transport
Scenario #7	0.53 ft/sec	Transport	Transport

Table 3e-2, Recirculation Non-Fines Debris Lift Summary

CFD Scenario	Highest Continuous Velocity (ft/s)	Small and Large Piece Fibrous Debris: Lift or Stall (based on 0.28 ft/sec)	Large Piece Transco RMI: Lift or Stall (Based on 0.84 ft/sec)
Scenario #5	0.59 ft/sec	Lift	Stall
Scenario #6	0.53 ft/sec	Lift	Stall
Scenario #7	0.53 ft/sec	Lift	Stall

Transport of Small Fines

Per the NRC SE for NEI 04-07, Section 3.6.3, all small fines debris, regardless of type, are modeled as transporting to the strainer (transport fraction to strainer = 1.0). An exception is made for the silicone foam debris. The silicone foam will float (see NUREG/CR-6772) and is modeled as not transporting to the strainer (transport fraction to strainer = 0).

Transport of Coatings

Per Section 3.4.3.2 of NEI 04-07, all qualified, unqualified and damaged coatings within the ZOI are considered small fines. This size is also conservatively applied to all unqualified and all damaged qualified coatings outside the ZOI per the SE (p. 21). Therefore, 100% of coatings debris is modeled as transporting to the strainer, which is consistent with the Staff position that all coatings debris is highly transportable particulate.

Transport of Latent Debris

Guidance pertaining to the transport of latent debris is provided in the NRC SE for NEI 04-07, Section 3.6.3, which states that all debris generated outside the ZOI is small fine debris that subsequently transports to the strainers (transport fraction to strainer = 1.0).

Transport of Foreign Materials

Foreign material is quantified in two different groups; stickers/labels and glass. Guidance pertaining to miscellaneous debris types (foreign materials) is provided in the SE for NEI 04-07, Section 3.5.2.2.2. The guidance refers to three types of miscellaneous debris; equipment tags, tape, and stickers or placards affixed by adhesives. The guidance implies that all miscellaneous fines and particulate debris should be modeled with 100% transport to the sump strainer.

In addition, specific guidance is provided regarding the transport of foreign materials such as labels and placards. The SE suggests that these items be evaluated for transportability using the detailed transport methodology. However, given the absence of specific transport data for labels and stickers, these materials are modeled with 100% transport to the sump strainer.

Glass foreign material results from light fixtures located throughout containment. Due to the density (162 lbs/ft^3) of glass being significantly greater than water, glass debris will readily sink if it reaches the containment pool. The transport properties of glass have not been evaluated; however, it is reasonable to believe that glass debris will not transport to the containment sump. Glass debris which may reach the sump strainer would still need to lift more than 6 inches above the containment floor to block strainer suction area. Since there is no test data on the transport properties of glass, a conservative amount of 50% of the surface area of glass debris is modeled as transporting to the containment sump strainer.

The foreign materials can either disintegrate in transport or be transported to the sump strainer intact. Since no disintegration data is available for the foreign materials at SPS Units 1 and 2, transported materials are modeled as reaching the sump strainer intact. In this case, the wetted sump strainer area should be reduced by an area equivalent to 75% of the original single sided surface area of the foreign materials (labels or placards) per the SE.

Transport Fractions

Guidance provided by NEI 04-07, its associated SE by the NRC, and Regulatory Guide 1.82, "Water Sources for Long-Term Recirculation Cooling Following a Loss-of-Coolant Accident," Rev. 3, were used to determine the debris transport fractions.

Table 3e-3, Debris Transport Fractions

		Debris Transport Fraction			Fraction of Debris at Sump Strainer		
Debris Type	**Fraction of total**	**Scenario/Break**			**Scenario/Break**		
		5/BK4	**6/BK4**	**7/BK3**	**5/BK4**	**6/BK4**	**7/BK3**
Fiberglass (Transco Thermal Wrap)							
Fines	0.08	1.00	1.00	1.00	0.08	0.08	0.08
Small	0.25	1.00	1.00	1.00	0.25	0.25	0.25
Large	0.32	1.00	1.00	1.00	0.32	0.32	0.32
Intact	0.35	0	0	0	0	0	0
Sum	**1.00**	**-**	**-**	**-**	**0.65**	**0.65**	**0.65**
TempMat							
Fines	0.60	1.00	1.00	1.00	0.60	0.60	0.60
Large	0.40	1.00	1.00	1.00	0.40	0.40	0.40
Sum	**1.00**	**-**	**-**	**-**	**1.00**	**1.00**	**1.00**
Transco RMI							
Fines	0.75	1.00	1.00	1.00	0.75	0.75	0.75
Large	0.25	0	0	0	0	0	0
Sum	**1.00**	**-**	**-**	**-**	**0.75**	**0.75**	**0.75**

Thus, it can be seen that for all scenarios that 65% of the Transco Thermal Wrap/fiberglass, 100% of the TempMat and 75% of the RMI debris transport to the sump strainer.

Total Debris Transport to Sump

The debris transport fractions and break generated debris quantities are used to determine which break will result in the greatest amount of debris at the strainer. For Transco Thermal Wrap, TempMat and Transco RMI debris, the fraction of debris at the strainer is shown in Table 3e-3. All asbestos, calcium silicate, mineral wool, coatings, latent debris, and foreign materials are considered to transport to the sump strainer (i.e., transport fraction = 1.00), with the exceptions of glass foreign material and silicone foam. The silicone foam does not reach the strainer because it floats (i.e., transport fraction = 0). Glass foreign material is modeled as transporting 50% (i.e., transport fraction = 0.5).

Tables 3e-4 through 3e-6 summarize the quantities of debris that transport to the strainer face for the analyzed breaks.

Table 3e-4, Debris Quantities at Sump Strainer for Break S1

Debris Type	Units	Quantity Generated	Transport Fraction	Quantity at Strainer
Insulation				
Asbestos	[ft^3]	44.70	1.00	44.70
Cal-Sil / Asbestos	[ft^3]	2.15	1.00	2.15
Fiberglass	[ft^3]	0.00	0.65	0.00
Paroc	[ft^3]	6.10	1.00	6.10
Transco RMI Foil	[ft^2]	3964.00	0.75	2973.00
TempMat	[ft^3]	57.91	1.00	57.91
Transco Thermal Wrap – Within ZOI	[ft^3]	0.00	0.65	0.00
Insulation Jacketing				
Metal Insulation Jacketing	[ft^2]	1074.76	0.00	0.00
Cloth insulation Jacketing	[ft^2]	611.58	0.00	0.00
Missile Barrier Penetration Seals				
Silicone Foam	[ft^3]	2.64	0.00	0.00
Latent Debris				
Latent fiber (15% of latent debris)	[Lbm]	19.06	1.00	19.06
Latent Particulate (85% of latent debris)	[Lbm]	107.99	1.00	107.99
Sum:	[Lbm]	**127.05**		**127.05**
Foreign Materials				
Stickers/Labels (Note 1)	[ft^2]	104.00	1.00	104.00
Glass	[ft^2]	61.00	0.50	30.50

Note 1: The surface area of foreign material shown in this table is the quantity of debris which will transport to the strainer. For the purpose of affected strainer suction area, the quantity of transported stickers/labels is reduced to 75% of the single sided surface area.

Table 3e-5, Debris Quantities at Sump Strainer for Break S2

Debris Type	Units	Quantity Generated	Transport Fraction	Quantity at Strainer
Insulation				
Asbestos	[ft^3]	0.00	1.00	0.00
Cal-Sil / Asbestos	[ft^3]	8.84	1.00	8.84
Fiberglass	[ft^3]	4.16	0.65	2.70
Paroc	[ft^3]	16.99	1.00	16.99
Transco RMI Foil	[ft^2]	474.60	0.75	356.00
TempMat	[ft^3]	8.42	1.00	8.42
Transco Thermal Wrap – Within ZOI	[ft^3]	113.45	0.65	73.74
Insulation Jacketing				
Metal Insulation Jacketing	[ft^2]	397.45	0.00	0.00
Cloth insulation Jacketing	[ft^2]	300.59	0.00	0.00

Missile Barrier Penetration Seals				
Silicone Foam	[ft^3]	0.00	0.00	0.00
Latent Debris				
Latent fiber (15% of latent debris)	[Lbm]	19.06	1.00	19.06
Latent Particulate (85% of latent debris)	[Lbm]	107.99	1.00	107.99
Sum:	[Lbm]	**127.05**		**127.05**
Foreign Materials				
Stickers/Labels (Note 1)	[ft^2]	104.00	1.00	104.00
Glass	[ft^2]	61.00	0.50	30.50

Note 1: The surface area of foreign material shown in this table is the quantity of debris which will transport to the strainer. For the purpose of affected strainer suction area, the quantity of transported stickers/labels is reduced to 75% of the single sided surface area.

Table 3e-6, Debris Quantities at Sump Strainer for Break S3

Debris Type	Units	Quantity Generated	Transport Fraction	Quantity at Strainer
Insulation				
Asbestos	[ft^3]	5.91	1.00	5.91
Cal-Sil / Asbestos	[ft^3]	33.81	1.00	33.81
Fiberglass	[ft^3]	0.00	0.65	0.00
Paroc	[ft^3]	3.34	1.00	3.34
Transco RMI Foil	[ft^2]	3964.00	0.75	2973.00
TempMat	[ft^3]	44.72	1.00	44.72
Transco Thermal Wrap – Within ZOI	[ft^3]	0.00	0.65	0.00
Insulation Jacketing				
Metal Insulation Jacketing	[ft^2]	924.45	0.00	0.00
Cloth insulation Jacketing	[ft^2]	558.58	0.00	0.00
Missile Barrier Penetration Seals				
Silicone Foam	[ft^3]	18.93	0.00	0.00
Latent Debris				
Latent fiber (15% of latent debris)	[Lbm]	19.06	1.00	19.06
Latent Particulate (85% of latent debris)	[Lbm]	107.99	1.00	107.99
Sum:	[Lbm]	**127.05**		**127.05**
Foreign Materials				
Stickers/Labels (Note 1)	[ft^2]	104.00	1.00	104.00
Glass	[ft^2]	61.00	0.50	30.50

Note 1: The surface area of foreign material shown in this table is the quantity of debris which will transport to the strainer. For the purpose of affected strainer suction area, the quantity of transported stickers/labels is reduced to 75% of the single sided surface area.

3f - Head Loss and Vortexing

The head loss, debris loading and test program methodology for SPS was the same as that used for NAPS and Millstone 2. The NAPS audit report (ADAMS ML072740400) and Millstone 2 audit report (ADAMS ML072290550), section 3.6, contain detailed descriptions of head loss and vortexing for NAPS and Millstone 2, respectively. The NRC staff reviewed the methods used for determining head loss and testing for vortex formation for the NAPS and Millstone 2 strainers. The NRC staff found these methods acceptable. For SPS, the same testing methodology was used, including the determination of test hydraulic conditions (e.g. minimum water level, strainer flow rates) as that described in the North Anna NRC audit report (ADAMS ML072740400).

The ECCS systems that support containment depressurization during a postulated event are the CS system, RS system and SI system, and the systems are depicted in Figures 3f-1 through 3f-3, respectively.

There are three main design concerns that set limits on the maximum allowable strainer head loss:

- LHSI and RS pump NPSH margin (see section 3g);
- Flashing within and downstream of strainers; and
- Air dissolution within the strainer and voiding at pump inlets and the effect on required NPSH.

Minimum Strainer Submergence (RS Section)

Minimum strainer submergence when the RS pumps begin taking suction from the strainer is nominally three inches for either a Small Break LOCA (SBLOCA) or a Large Break LOCA (LBLOCA). This is based on a minimum water level of 21.6 inches above the floor (el. (–) 27 ft-7 in.) The strainer is fully submerged and not vented prior to RS pump start for all accident scenarios. Maximum tested strainer head loss with a fully developed debris bed is 3.1 ft. at the minimum temperature expected at the start of recirculation (196°F) for the limiting set of ORS pumps. The minimum ORS pump NPSH margin is 3.29 ft. (Section 3g). This head loss value exceeds the minimum submergence of three inches at RS pump start. However, no flashing is expected to occur in the RS strainer as discussed below.

Dominion received NRC approval for a licensing amendment for using a new GOTHIC analysis methodology to develop post-LOCA sump design inputs for the RS strainer flashing analysis. The license amendment request was submitted by letter dated October 22, 2007 (Serial No. 07-0693) [as supplemented by letters dated October 24, 2007 (Serial No. 07-693A, (ADAMS ML072970605); November 2, 2007 (Serial No. 07-393B) (ADAMS ML073100827); November 9, 2007 (Serial No. 07-693C)]. The alternate method relaxed some of the

conservatisms in the NPSH analysis methodology in Topical Report DOM-NAF-3-0.0-P-A to develop design inputs for the hydraulic analysis of the RS strainer during early RS pump operation after a LOCA. The NRC approved the license amendment request for SPS Units 1 and 2 in Amendments 256/255, respectively, in a letter dated November 15, 2007 (ADAMS ML073120506). Implementation of this change was completed for both units during the fall 2007 SPS Unit 1 refueling outage.

Detailed information on the results of the flashing evaluation for the RS strainer is contained within Dominion's letter dated November 9, 2007 as responses to NRC RAI questions 7 and 8. The analysis demonstrated that no flashing would occur in the RS strainer during the short period of low water levels.

Minimum Strainer Submergence (Low Head Safety Injection Section)

Minimum strainer submergence when the LHSI pumps begin taking suction from the strainer is nominally eight inches. This is based on a minimum water level of 49.2 inches above the floor (el. (–) 27 ft-7 in.). The strainer is fully submerged and not vented prior to LHSI pump recirculation mode transfer for all accident scenarios. Maximum tested strainer head loss with a fully developed debris bed is 1.77 ft. at the temperature expected at the start of recirculation (175°F). The minimum LHSI pump NPSH margin at recirculation mode transfer (RMT) is 1.88 ft. (section 3g). This head loss value exceeds the minimum submergence of eight inches at LHSI pump RMT. However, no flashing in the LHSI strainer is expected to occur as described below.

Flashing analysis of the LHSI strainer was performed for the bounding post-LOCA conditions from the GOTHIC NPSH available analysis for the LHSI pump. Not crediting the water depth above the LHSI fins, the margin to flashing at the debris bed is about 3.9 psid. Subtract from this margin the following three loss components: (i) an assumed maximum debris pressure loss of 0.87 ft, (ii) an internal loss of 0.90 ft, and (iii) the maximum dynamic head of 2.14 ft. Hence, the minimum margin to flashing in the LHSI system is still about 2.26 psi or about 5.3 ft. Hence, there is no concern of flashing in the LHSI system for the one-pump operation.

The LHSI two-pump operation does not present any more concern than the one-pump operation since (i) the debris losses stated above were for two-pump operation and (ii) most of the internal losses occurs in the branch lines leading to the pump inlets and neither this nor the maximum dynamic head changes with the number of LHSI pumps running.

Vortexing Evaluation

To demonstrate that there would be no ingestion of air due to vortexing, a series of tests were performed at successively more severe conditions. These tests were performed at the Atomic Energy of Canada Ltd (AECL) reduced scale

facility using a test module with a pair of single-sided fins (with perforated metal sides facing each other).

Minimum strainer submergence is at least three inches for RS and at least eight inches for LHSI strainer at the time of pump recirculation initiation.

A series of tests were performed where the submergence of the strainer was reduced in steps, and the flow rate was increased. The conditions of testing bounded both the RS and LHSI strainers. Several submergence levels, including down to the top of the fin (zero submergence), were tested with flowrates significantly above design (>10 times). Careful observation of the water surface was performed for 5 minutes at each step, and it was concluded that the strainer would not ingest air as no hollow core vortices were observed at any of these submergence levels.

Air Ingestion

Per Attachment V-1 to Appendix V of the SE and Regulatory Guide 1.82, the design of PWR recirculation sumps also needs to consider air evolution (release from solution) and air ingestion (i.e., due to vortex formation). Per Attachment V-1 to Appendix V of the SE, the inlet void fraction (total percentage of air and water vapor by volume) downstream of the screen should be limited to 3% to prevent cavitation problems with the ECCS/CSS pumps. Per Regulatory Guide 1.82, the amount of air ingestion should be limited to 2% to prevent degraded performance of the ECCS/CSS pumps. For the purpose of the evaluation of air ingestion, the 2% ingestion limit is conservatively applied to the total of the air and water vapor ingested by the pump (inlet void fraction) rather than the air alone. Therefore, immediately downstream of the sump screen, the void fraction must be less than or equal to 3%. Additionally, at the pump inlet, the void fraction must be less than or equal to 2%.

The void fraction downstream of the screen is a function of the sump pool temperature and the head loss through the sump strainer and debris bed. As the strainer design must prevent flashing for the allowable head loss, the void fraction will only be due to air and water vapor evolved (released from solution) downstream of the strainer or air that is ingested into the strainer due to vortex formation. Vortex formation is addressed in testing as described above.

The void fraction due to air and water vapor evolved (released from solution) downstream of the strainer and at the pump suction is calculated by finding the maximum solubility of air in water upstream and downstream of the strainer and taking the difference as evolved air. Similarly the maximum solubility of air at the pump suction is determined and compared to the maximum solubility downstream of the strainer with the difference being evolved air. The analytical evaluation (assuming no vortex formation) for the maximum head loss from testing demonstrates that the void fraction downstream of the strainer is zero percent for the worst case containment conditions after a LOCA. Since there is

no vortex formation and since there is no void formation at the pump inlet due to air ingestion, no adjustment to NPSH required is necessary.

Head Loss Testing

Chemical effects testing was not part of the head loss tests described below. Testing for chemical effects is detailed in Section 3o.

SPS contracted with AECL to determine required strainer surface area and fin pitch by testing. Initial strainer size was determined by AECL using the NUREG/CR-6224 correlation, and tests were conducted with scaled plant debris loads to determine the final surface area and fin pitch for the strainer. Head loss testing was conducted for SPS to determine the fin area and fin pitch (spacing between fins) for the replacement ECCS strainer under the worst-case debris loading conditions. The testing consisted of 41 reportable tests in a reduced-scale test tank. Head loss testing was conducted in AECL test facilities at Chalk River, Ontario.

A set of testing procedures was developed to conduct the head loss tests. These procedures include debris preparation procedures, procedures to measure temperature, head loss and flow rate, debris introduction procedures and test termination procedures. A water jet from a pressure washer was used to separate fibers after small fiber batts were broken into smaller pieces using a leaf shredder. After the fiber was processed for reduced scale thin bed head loss tests, the particulate debris was introduced before the first batch of the fibrous debris. Then, the fiber debris was incrementally added into the test loop until the peak thin-bed head loss was observed. This method effectively tested multiple thicknesses of fibrous debris within a single test. For full debris load tests, the particulate was introduced proportionately with the fibrous debris. As part of the test module design, a baffle and skirt were arranged around the test module to reduce the disturbance caused by the turbulent flow eddies generated by the stirring mechanism and the return flow. One of the purposes of the skirts was to simulate the presence of a debris bed from an adjacent fin or module. Any flow of debris out from under the test module was limited to those areas that would be open in the final design. The presence of the skirts and baffle also helped minimize debris bed disturbance.

Procedures for debris preparation and additions were the same as those used for the North Anna testing and Millstone 2 testing described and reviewed in their respective NRC Audit Reports (ADAMS ML072740400 and ADAMS ML072290550).

Reduced Scale Test Facility

The reduced-scale test tank was a 90-inch diameter open plastic tank with a maximum fill height of 56 inches. The tank was equipped with flow, temperature, and differential pressure measuring instruments, as well as heating elements

capable of heating the fluid to a maximum temperature of 140°F. The test pump was capable of producing a flow rate between 1 and 120 gpm.

The reduced-scale test module consisted of one central fin and two half fins to each side with adjustable pitches. The fins were constructed of perforated stainless steel with a perforation size of 1/16 inch and a vertically-oriented corrugated bend angle of 60 degrees. The half fins were similar to the central fin, but only had perforated material on the side facing the central fin. The other side of the half fins was solid. The fins used in the test tank were of the same construction/design as the fins for the installed SPS strainer.

Test Description

AECL used the reduced-scale head loss test loop to perform a series of tests to determine the thin bed thickness, and optimize the total surface area and fin pitch for normal debris. The final strainer module design was based on the reduced-scale head loss test loop results.

Based on analytical head loss predictions, a thin-bed will produce the worst head loss. Based on AECL experience with their corrugated finned strainer designed for French pressurized water reactors (PWRs), the worst case head loss occurred with a thin-bed of fiber approximately ¼-inch thick.

To determine the worst-case thin-bed thickness and the optimum strainer surface area, the full particulate load was added to the test tank. This was followed by fibrous debris additions in increments calculated to provide a 1/16-inch thickness on the test module. Head loss was allowed to stabilize after each fiber addition. This process was continued until the total bed thickness was one or two increments beyond the thin-bed thickness (seen as a reduction in head loss increase per fiber addition). Measured head loss was recorded and plotted versus the fiber quantity and compared with the analytical correlation results (NUREG/CR-6224) and the head loss acceptance criteria. The final two reduced-scale tests used to determine the total surface area of the strainer (thin-bed tests) had durations of more than 48 hours to allow appropriate head loss stabilization.

To determine the optimum fin pitch, head loss testing was conducted with the full debris load. Baffles were installed on the test module to prevent debris between the fins from being pushed out either under the header or under the side.

Final reduced-scale tests used to determine the total strainer area and fin pitch of the strainer were conducted at a tank water temperature of 104°F and a flow rate scaled by the ratio of test section area to modeled strainer area. The water temperature in the test tank was lower than the sump pool initial temperature. Thus, the test tank flow rate is the same as the sump pool flow rate adjusted for strainer area scaling (due to size difference between the test module and the strainer installed in containment).

Total installed RS strainer surface area is 6220 ft^2 in Unit 1 and will be 6260 ft^2 in Unit 2 following completion of the strainer installation during the spring 2008 refueling outage. This exceeds the total tested surface area (scaled) of 6000 ft^2 by more than the 150 ft^2 allocated for tags and stickers, and is thus conservative. A larger surface area was installed to standardize the strainer module size and still envelope the surface area that the analyses indicated was needed. Using the maximum water flow through the strainer of 12,700 gpm (four RS pumps at maximum flow), dividing flowrate by surface area gives the strainer face velocity in containment as 0.0045 ft/sec. For the thin-bed testing in the reduced scale test tank, the test module surface area is 22.5 ft^2 and the test module flowrate is 47.6 gpm. Dividing flowrate by surface area gives a test module velocity of 0.0047 ft/sec, which is slightly higher than the flowrate in containment and thus conservative since the higher flowrate in the test tank will allow for less debris settling.

Total installed LHSI strainer surface area is 2180 ft^2 in Unit 1 and 2230 ft^2 in Unit 2. This exceeds the total tested surface area (scaled) of 2050 ft^2 by more than the area required for tags and stickers, and is thus conservative. A larger surface area was installed to standardize the strainer module size and still envelope the surface area that the analyses indicated was needed. Using the water flow through the strainer of 3330 gpm (the maximum LHSI pump flow rate for the minimum NPSH case in section 3g), dividing flowrate by surface area gives the strainer face velocity in containment as 0.0034 ft/sec. For the thin-bed testing in the reduced scale test tank, the test module surface area is 30.0 ft^2 and the test module flowrate is 49.0 gpm. Dividing flowrate by surface area gives a test module velocity of 0.0036 ft/sec, which is slightly higher than the flowrate in containment and thus conservative since the higher flowrate in the test tank will allow for less debris settling.

Full debris load testing for Surry demonstrated that encapsulation of the strainer will not occur.

Settling of debris in containment (especially particulate) is inevitable due to the very low water velocities and the many surfaces available for settling. This settling will reduce the debris able to arrive at the strainer and contribute to head loss. To ensure that a conservative amount of debris arrived at the strainer test module, test tank water was continuously stirred in the reduced-scale test tank. For the thin-bed test due to the slightly higher test tank bulk velocities, this stirring likely prevented settling of debris in the test tank that would actually settle in containment, and thus the amount of debris on the test module strainer (and thus the required strainer area) is likely conservatively high. For the full-debris load tests, the maximum bulk velocity in the test tank exceeds the maximum bulk velocity in containment, and thus is conservative since more settling is likely to occur in the slower-moving water in containment. The continuous stirring ensured that the head loss from the tests likely exceeds what would occur in containment. The head loss from the full debris load tests was much less than

the head loss for the thin bed tests in the reduced-scale tests due to the larger fiber-to-particulate ratios in the full debris load tests. Visual observation of debris settling in both the reduced scale and large scale test tanks showed that some debris settled outside the baffled fins, but not a significant amount.

Test termination criteria for the reduced-scale testing was a change of less than 5% or 0.01 psi, whichever is greater, and exhibiting no general steadily increasing trend in pressure, within 1.5 hours. Note that a tank turnover (defined as the time equal to the test tank water volume divided by the flow rate) for SPS reduced-scale testing was typically around 27.5 minutes.

Fibrous debris was prepared as follows:

- Cut the fiber batts into pieces of approximately 6 in. (0.15 m) by 6 in. (0.15 m),
- Break the pieces into smaller pieces using the leaf shredder,
- Measure the mass of fiber for each specific addition,
- Combine the fiber addition with water,
- Agitate the mixture for 2 to 5 minutes with a water jet from a pressure washer to separate the fibers, and
- Confirm that the degree of fiber separation met expectations and was consistent with other batches used.

Particulate debris included Cal-Sil and surrogates for both coatings and latent particulate and was prepared as follows:

- Measure the mass of particulate for each specific addition,
- Photograph a typical particulate addition during the test program, and
- Combine the particulate addition with water.

Debris preparation procedures for SPS were the same as that used for North Anna and for Millstone 2 as reviewed during their respective NRC GL 2004-02 audits (ADAMS ML072740400 and ADAMS ML072290550).

Ability of the Design to Accommodate the Maximum Volume of Debris

The analytical transport calculation included the maximum quantities of debris able to transport to the strainer. Head loss testing was conducted using this full debris load to determine fin spacing so that all of the debris was accommodated on the strainer, and the head loss limits were not exceeded. Head loss testing was conducted with the full debris load in the reduced-scale test tank to determine the amount of strainer encapsulation and the resulting head loss. The debris composition for these tests was based on the break with the highest debris load.

In the reduced-scale test tank, the full particulate and fiber debris loads were added in increments near the start of each test. For full debris load testing, the front baffle on the test module was not utilized as the debris bed was allowed to encapsulate the test section both in front of the fins and on top of the fins below the water surface.

After the final debris addition, the test was continued until the pressure drop stabilized. The bottom of the test tank, upstream and on both sides of the test module, and the top of the cover plate were periodically brushed to re-suspend fiber and/or particulate to reduce the quantity of debris that settled upstream and beside the test module. With all the debris on the strainer, there was no encapsulation of the strainer. Encapsulation did not exceed the minimum submergence of the strainer in any test and so does not lead to air ingestion. The head loss for these full-debris load tests was well within the acceptance criteria and significantly less than the thin-bed head loss results.

Ability of the Design to Accommodate Thin-Bed

Head loss testing has demonstrated the ability of the strainer to accommodate the formation of a thin-bed of debris. The debris added for the thin-bed tests conservatively used the minimum amount of fiber necessary for thin-bed formation combined with the entire LBLOCA particulate debris load.

In the reduced-scale test tank, baffles were positioned across the back and front of the fins to prevent water turbulence from either the tank return line or the stirring mechanism from disturbing the debris bed. The full particulate debris load was added at the start of the test, and then additions of fiber were made in 1/16-in. (1.6-mm) theoretical bed thickness increments until the debris bed thickness was two 1/16-in. (1.6-mm) increments beyond the thin bed thickness. Note that the theoretical bed thickness is defined as the uncompressed fiber volume divided by the test module surface area. The first fiber addition was made approximately 30 minutes after the particulate addition. The second fiber addition was made approximately 1.5 hours after the first addition. Subsequent fiber additions were only made once the pressure increase resulting from previous additions had stabilized. The minimum time between additions was 1.5 hours.

Debris Surrogates

Debris surrogates used for testing are listed in table 3f-1 below. Scaled quantities of debris for the head loss testing are determined by dividing the amount of debris expected to transport to the strainer (based on the analytical transport calculation) by the ratio of final designed strainer surface area (6000 ft^2 RS, 2050 ft^2 LHSI) to test module surface area (22.5 ft^2 RS, 30.0 ft^2 LHSI for the reduced scale test).

Table 3f-1: SPS Testing Debris

SPS Debris	Surrogate for Testing
Asbestos	Cerafiber
Fiberglass	Nukon fiberglass
Paroc / Mineral Wool	Paroc 140E
TempMat	TempMat
Thermal Wrap	Transco Thermal Wrap
Calcium Silicate	Johns-Mansville Cal-Sil
Latent Fiber (lb_m)	Nukon fiberglass
Qualified Coatings (ft^3)	325 Mesh Walnut Shell
Unqualified Coatings (ft^3)	325 Mesh Walnut Shell
Latent Particulate (lb_m)	325 Mesh Walnut Shell

Use of Cerafiber as a surrogate debris for asbestos is reasonable since the material density and the fiber diameter is similar for Cerafiber and asbestos fibers. Thus, the head loss behavior of the materials is similar.

Coatings in the SPS containment consist largely of epoxy, with a density of about 94 lbm/ft^3. Thus, the epoxy coating is most likely to remain suspended in the containment sump pool and be deposited on the strainer surface. Ideally, epoxy coating would be used in the test tank to avoid the use of a surrogate. However, no effective method exists to produce the approximately10 µm size for the coating pieces. All of the coating is analytically assumed to fail as 10 µm particulate consistent with the NRC SE to produce the worst-case debris bed head loss.

Walnut shell was chosen as a conservative surrogate for coatings debris. The density of walnut shells is approximately 75-87 lbm/ft^3, which makes it able to be suspended in water longer than epoxy and thus conservative for testing. Testing of the ground walnut shell used in the head loss tests has shown that it does not coagulate in water in the absence of flocculating agents, and its volume change in water is small (average of 2.3%).

Walnut shell is available with a mean size of approximately 23 µm, and a size range of 5 µm to approximately 60 µm. This is a reasonably close match to the expected size of epoxy coating chips assumed in the analytical transport calculation and provides a sufficiently conservative head loss.

AECL used walnut shell flour to simulate all plant coatings and latent debris particulate debris. With regard to both qualified and unqualified coatings debris, AECL's testing objective was to accumulate the scaled-down bounding volumes of particulate on the test strainer with particles approximating the nominal NEI Guidance Report-recommended 10 μm diameter particle size.

The AECL analysis of the walnut particle size distribution determined that the average size was about 23 μm, and (from a specific surface area consideration based on spherical particle shape assumption) the effective particle size was about 32 μm. This means that the walnut flour particles were a factor of about 3.2 larger than the NEI Guidance Report-recommendation, which translates to a factor of 10 decrease for head loss impact. Note that at the very low approach velocities associated with the SPS replacement strainer, the head loss is approximately linear with the square of the specific surface area. The specific surface area for the walnut flour size distribution, assuming spherical particles, is about 57,000 ft^2/ft^3, as compared to 183,000 ft^2/ft^3 for the SE-assumed particulate. Therefore, if only the walnut flour hydraulic characteristics are considered, a conclusion could be drawn that walnut flour may not be a good surrogate material to meet GR and SE coatings requirements.

Based on an NRC review of the use of walnut shell flour as a surrogate for coatings and latent particulate at Millstone Unit 2, as documented in the Millstone Unit 2 audit report, and at North Anna, as documented in the North Anna 2 audit report, which considered transport, filtration and head loss properties of the walnut shell flour surrogate material, walnut shell flour simulates the SPS coating particulate and latent particulate in an acceptable manner. These similarities overcome the particle size disparities because of the equivalent head loss behavior.

Head Loss Testing Results and Strainer Design Maximum Head Loss

The final qualification of the replacement strainer was based on two reduced-scale thin-bed tests and one full debris load head loss test.

The maximum peak measured debris head loss for the RS strainer is 1.3 psi at 104°F. The acceptance criterion for debris head loss (after subtracting allowance for analytically determined clean strainer head loss) is 1.9 feet of water at 170°F. This value was converted to psi and scaled to the test tank temperature of 104°F to arrive at acceptance criteria of 1.4 psi at 104°F. AECL used a linear extrapolation scheme to determine the viscosity-corrected head loss based on the maximum measured debris bed head loss. No evidence of debris bed cracking (boreholes) phenomena occurred in the thin-bed tests in the reduced scale test tank. Thus, scaling of the test tank results using viscosity is not affected by formation of boreholes.

The maximum peak measured debris head loss for the LHSI strainer is 0.52 psi at 104°F. The acceptance criterion for debris head loss (after subtracting allowance for analytically determined clean strainer head loss) is 5.8 feet of water at 140°F. This value was converted to psi and scaled to the test tank temperature of 104°F to arrive at acceptance criteria of 3.5 psi at 104°F. AECL used a linear extrapolation scheme to determine the viscosity-corrected head loss based on the maximum measured debris bed head loss. No evidence of debris bed cracking (boreholes) phenomena occurred in the thin-bed tests in the reduced scale test tank. Thus, scaling of the test tank results using viscosity is not affected by formation of boreholes.

Not considering potential chemical effects, AECL used linear extrapolation (pressure drop proportional to the viscosity) to predict the maximum debris bed head loss acceptable at the test tank temperature of 104°F. Because the flow rate is very low close to the strainer, and the flow regime is estimated to be laminar, the friction loss is proportional to the viscosity. Therefore, linear extrapolation is considered appropriate.

The maximum head loss allowed across the strainer by structural analysis is 9 psi (equivalent to greater than 20 feet at 100°F), which far exceeds the maximum allowed debris bed head loss.

Clean Strainer Head Loss

Clean strainer head loss was determined using analytical calculations. Pressure loss is comprised of five components: loss through the debris, internal losses in the fins, merging losses of the flow from the fins joining with the collection channel flow, friction and shock losses in the collection channel. Debris pressure drop is determined experimentally, while internal losses are calculated based on standard calculation techniques for flow in pipes and ducts. The pressure losses in the strainer are presented for the case of flow entering the strainer uniformly through all of the fins, because this is the most realistic situation during strainer operation, and it gives an upper bound of the internal pressure loss. The SPS strainer design incorporates internal orifices to ensure uniform flow across the strainer modules.

The analytical clean RS strainer head loss is 1.69 ft of water at 170°F. The strainer system consists of a total of 21 Unit 1 and 20 Unit 2 side-by-side strainer modules, arranged in two legs attached to a common header, as shown in Figures 3j-1 and 3j-2.

The analytical clean LHSI strainer head loss is 0.90 ft of water at 140°F. The strainer system consists of a total of four side-by-side strainer modules, arranged in two legs attached to a common header, as shown in Figures 3j-1 and 3j-2.

Near-Field Effect

The Near-Field effect is debris settling upstream of the strainer in a head-loss test flume or tank due to low flow velocities. Large pieces of RMI (25% of the total RMI generated), intact pieces of low-density fiberglass (35% of total low-density fiberglass generated), and 10% of the large and small pieces (those that didn't erode) were credited with not being on the strainer surface in the analytical debris transport calculation as discussed above. No other settling of debris was credited in the debris transport calculation since all other debris is transported to the strainer and is assumed to be deposited on the strainer fins. The debris transport calculation results determined the amounts and types of debris used in the head-loss test tank. That testing was used as the basis for the design of the SPS strainer. Because intact pieces of low-density fiberglass and un-eroded small and large pieces of fibrous debris were analytically shown to be unable to lift onto the strainer fins, they were not added to the test tank during head-loss testing.

Tests were conducted to size the strainer for the postulated debris loads using a reduced scale test facility described above. The design of the tank and associated supply and return piping minimizes debris settling and maximizes the amount of debris that is entrained in the water and deposited on the strainer surface. Stirring was done in the reduced scale test facility to suspend as much debris as possible and deposit it on the strainer surface. Despite the stirring, some of the debris settled. Since the velocities in the test tank were representative of containment, and because of the stirring which resulted in a conservatively low amount of settling compared to what is likely to occur in containment, no excessive settling of debris occurred during head loss testing for SPS.

Significant Margins and Conservatisms in Head Loss and Vortexing Analyses

- Reduced-scale test tank was used to determine debris strainer design size and fin pitch by measuring debris head loss. The small diameter of the tank and the constant stirring ensured that a minimal amount of the debris settled on the floor of the tank thus maximizing the amount of debris and subsequent head loss across the test fins. Settling of small debris in containment is expected to be significant especially in areas remote from the strainer.

- The maximum head loss is dependent on formation of a thin-bed on the strainer surface. Formation of a thin-bed is dependent on a small quantity of fiber mixing with all of the particulate on the strainer. Additional fiber, beyond the minimum quantity required for the thin-bed tends to produce lower head losses. Thin-bed formation conservatively used the minimum quantity of fiber necessary to form a thin-bed in combination with the maximum LBLOCA particulate load. This conservative combination is very unlikely to occur at the strainer for either a SBLOCA or a LBLOCA.

- Vortexing analysis and testing showed no vortexing with a strainer that has zero submergence (water level at the top of the strainer). The installed strainer at SPS has a nominal three inches of submergence at the beginning of recirculation, and this value increases as the RWST continues to be sprayed into containment.

- Maximum head loss is calculated at the minimum containment sump water level. The minimum water level only occurs at the beginning of recirculation and water level increases as additional RWST water is sprayed into containment. The maximum head loss will not be established until significantly after RS pump start and, based on head loss testing, will not occur until significantly after the approximately 2 hours required for all of the RWST water to be pumped into containment.

- Head loss testing involved adding all of the particulate to the test tank prior to the addition of any fiber, and then adding fiber in increments to gradually build a thin-bed on the strainer. An actual break is much more likely to mix all of the available fiber and particulate together in the sump pool so that they arrive at the screen together and thus are unlikely to form a thin bed since there is likely to be more fiber in the mix than is necessary for thin bed formation. This will lead to lower head losses.

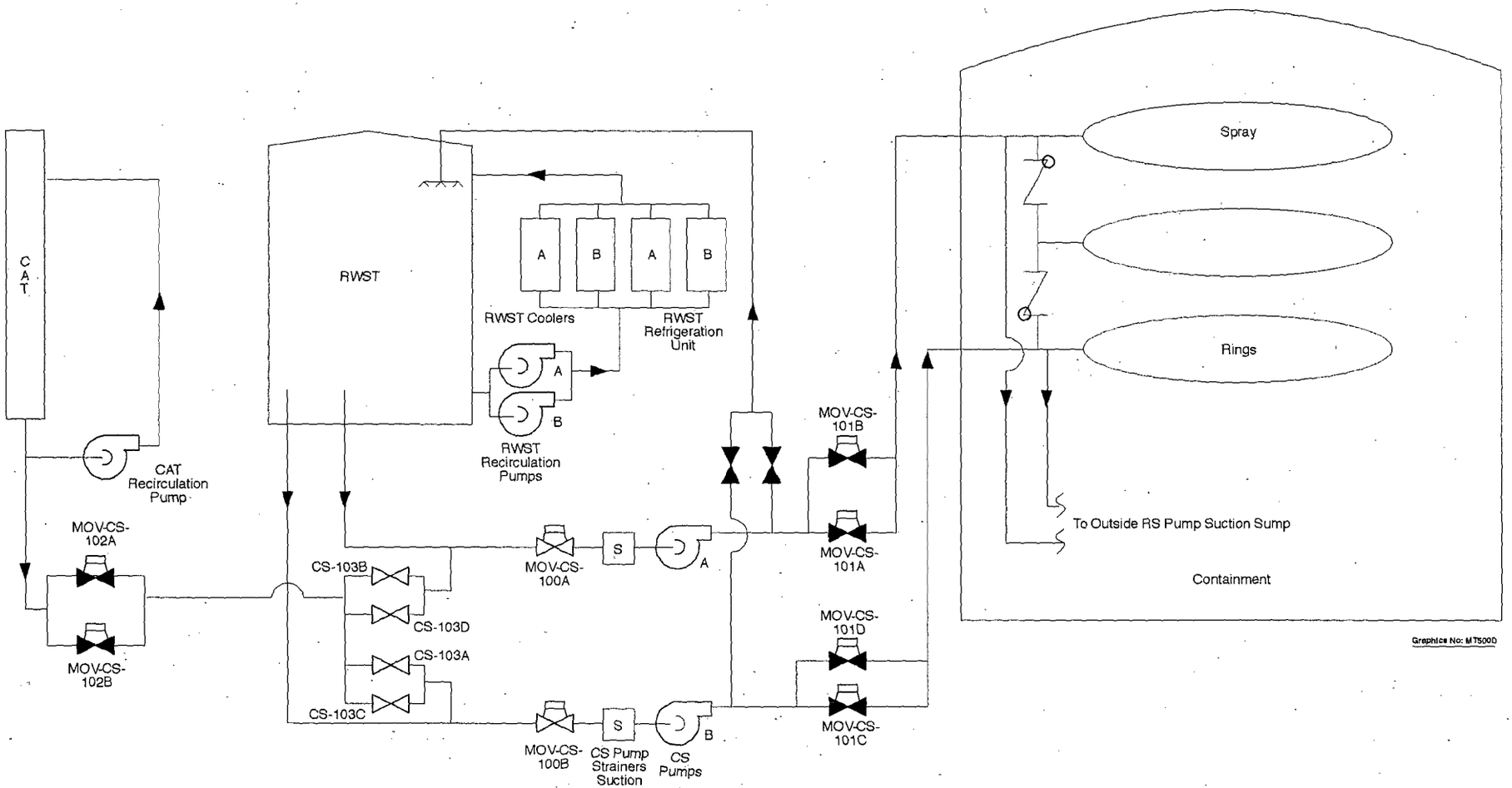

Figure 3f-1
SPS Containment Spray System

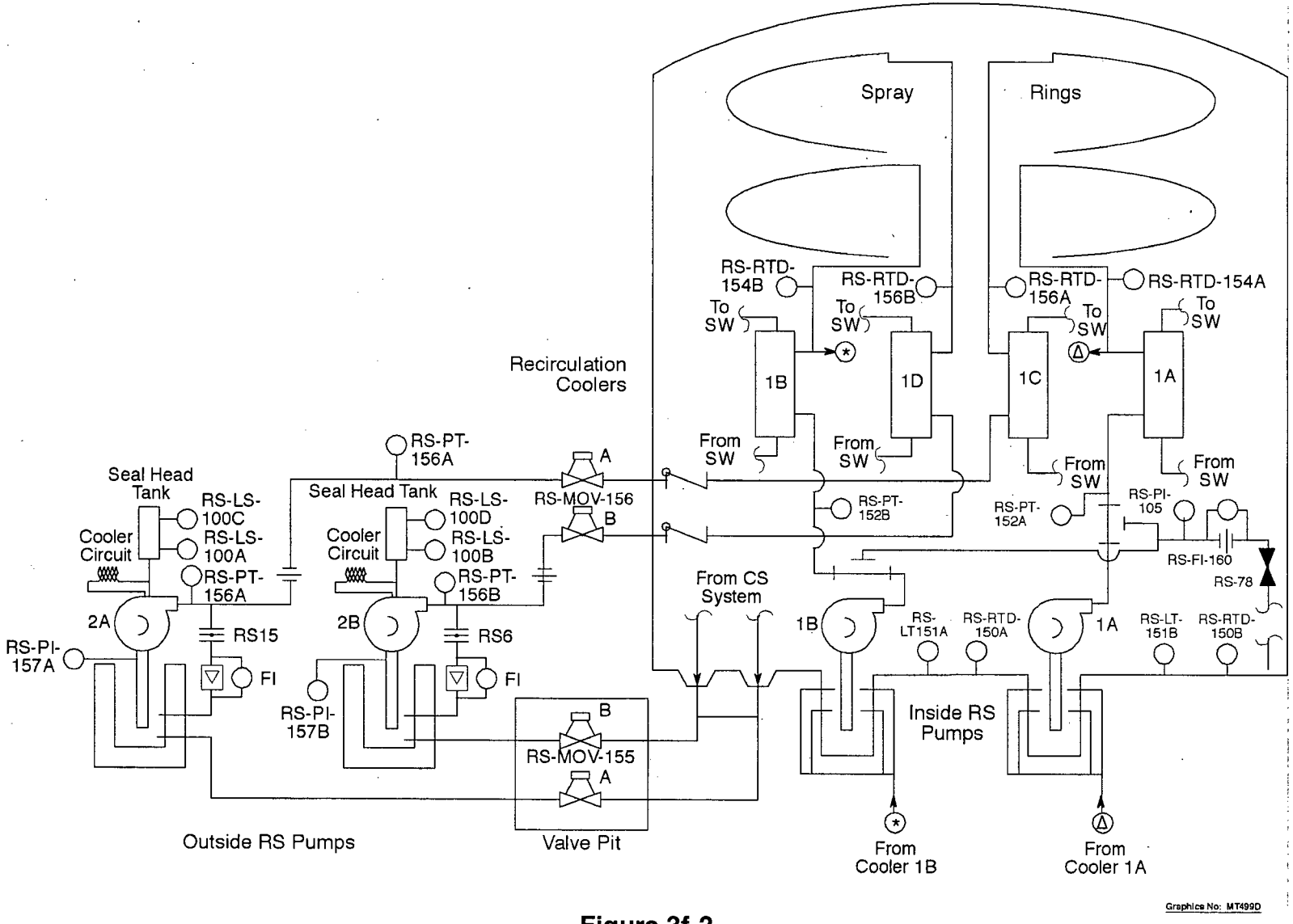

Figure 3f-2
SPS Recirculation Spray System

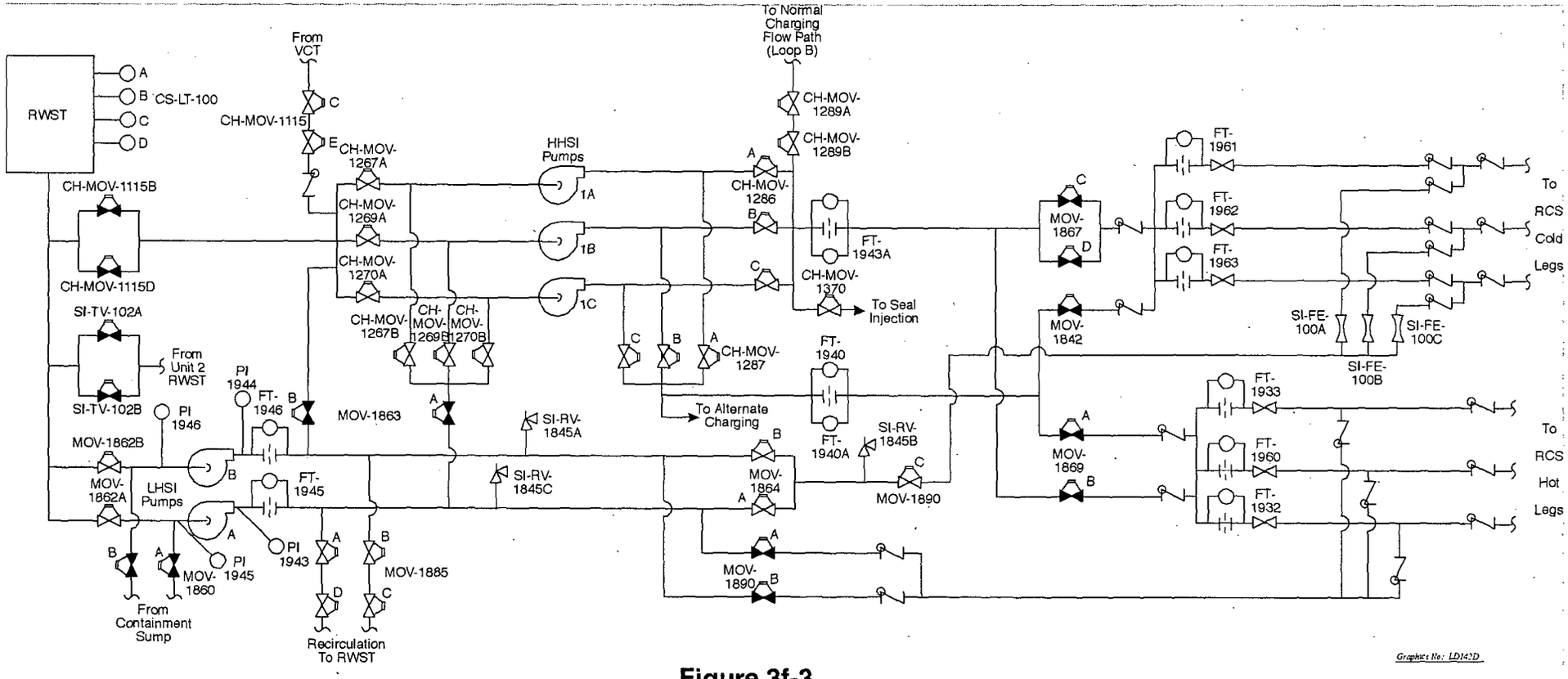

Figure 3f-3
SPS Safety Injection System

3g - Net Positive Suction Head (NPSH)

A transient calculation of NPSH available (NPSHa) has been performed for the LHSI, ORS and IRS pumps for SPS Units 1 and 2 using the GOTHIC analysis methodology in topical report DOM-NAF-3-0.0-P-A. The SPS calculation uses the same methodology as the North Anna calculation that was reviewed by the NRC staff during the NAPS audit and discussed in the NRC audit report (ADAMS ML072740400). The SPS NPSHa analyses were submitted to the NRC in a letter dated July 28, 2006 (Serial No. 06-545). The analyses included revised TS limits for containment air partial pressure and a change to start the RS pumps on a 60% RWST wide range level coincident with High High Containment Pressure. The NRC approved the Surry license amendments with the supporting NPSHa analyses in a letter dated October 12, 2006. Surry implemented the new GOTHIC NPSHa analyses with the license amendments on Unit 2 during the fall 2006 refueling outage and on Unit 1 during the fall 2007 refueling outage. Chapters 5 and 6 of the SPS UFSAR describe the critical plant input parameters (e.g., suction piping friction losses) and results for the transient NPSHa analysis.

Because the replacement sump strainer hydraulic design was not complete when the GOTHIC analyses were performed, the replacement strainer head loss was not included in the GOTHIC model (the original sump screen head loss was included). Thus, the difference between the GOTHIC NPSHa result and pump NPSH required represents the margin available for the replacement strainer head loss (clean and debris bed). Table 3g-1 summarizes the current NPSHa results with the margin to NPSH required. The NPSHa results vary from Dominion's July 28, 2006 letter because of a reduction in margin after correcting the containment water level versus volume input to GOTHIC. This issue was identified as Open Item 3.7-1 in the North Anna GSI-191 audit.

NRC GSI-191 Audit Open Item 3.7-1 for North Anna

During the NRC GSI-191 audit in July 2007, an error was identified in the North Anna NPSH available calculation. Appendix I of the NAPS audit report (ADAMS ML072740400) states:

> **Open Item 3.7-1:** Net Positive Suction Head Available Calculation
>
> The calculated net positive suction head available margins for the low head safety injection, inside recirculation spray and outside recirculation spray pumps were non-conservative. The margins for these pumps were overestimated by approximately 0.6 feet of head because of an error in the calculation of the static head of liquid. The licensee should evaluate this issue and provide a summary of the method and results to the staff in its supplemental response to GL 2004-02.

Dominion Response

During the extent of condition review, it was identified that the SPS NPSHa analysis included the same model error, but the effect on NPSHa was smaller. The NPSHa formulation in GOTHIC is specified by Equation 16 in topical report DOM-NAF-3-0.0-P-A. The GOTHIC formulation is consistent with the industry standard equation for NPSHa, was validated during benchmarking analysis to the previous containment analysis of record, and provides an accurate calculation of NPSHa when the inputs are correctly applied in the model. Thus, Dominion considers the GOTHIC formulation to be acceptable. The non-conservative bias in NPSHa was introduced into the calculation when attempting to reduce the containment water level for holdup.

GOTHIC calculates the pump suction pressure based on the GOTHIC water level in containment, which is based on all of the liquid volume being deposited in an open cylinder of nominal diameter (126 ft). To calculate NPSHa at the pump impeller centerline, the GOTHIC pump suction pressure needs to be adjusted to account for the actual water level in the containment basement when considering equipment and structure blockages and holdup of liquid volume at higher elevations. The GOTHIC model correctly calculated a reduced liquid volume based on holdup, but the water level versus volume table was incorrectly implemented. As a result, the NPSHa analysis used a water level that was based on the total containment liquid volume instead of the reduced liquid volume adjusted for holdup. The non-conservative bias in NPSHa was tracked to an error in the implementation of the containment water level versus volume relationship and not to the GOTHIC formulation for calculating NPSHa.

To resolve the issue for SPS, the GOTHIC NPSHa results were reduced to reflect the water volume holdup effect on basement water level. The impact was a 0.4-ft reduction in RS pump NPSHa and a 0.45-ft reduction in LHSI pump NPSHa. Subsequently, the GOTHIC models for LHSI pump NPSHa were rerun with the water level correction using GOTHIC version 7.2a. This code version includes a correction to the interfacial heat and mass transfer model that had been under predicting the heat transfer between the containment pool and the atmosphere in version 7.2dom. The use of Version 7.2a increased the LHSI pump NPSHa to offset the reduction from the water level adjustment. There was no change to NPSHa for the RS pumps from the code version change.
Table 3g-1 summarizes the NPSHa analysis results for SPS after correcting for the containment water level table input error and upgrading to GOTHIC version 7.2a.

Table 3g-1: Summary of GOTHIC NPSH Analysis Results

Pump	Minimum NPSHa*	Time of Minimum NPSHa	NPSH Required at Maximum Flow	Minimum NPSH Margin*
LHSI	15.7 ft	2894 seconds (transfer to recirculation mode)	13.82 ft at 3330 gpm	1.88 ft
IRS	15.1 ft	1397 seconds (8 minutes after pump start)	10.5 ft at 3650 gpm	4.60 ft
ORS	12.48 ft	1142 seconds (2.5 minutes after pump start)	9.19 ft at 3300 gpm	3.29 ft

* NPSHa increases significantly after the minimum point as sump temperature decreases and water level increases until the RWST is injected fully. Refer to the Surry UFSAR for figures of transient NPSHa and containment conditions (pressure, liquid temperature, water level).

3h - Coatings Evaluation

The general approach taken for coatings debris generation was a 10D ZOI radius. Additional guidance provided in NEI 04-07 and the NRC SE was followed for the effect on coatings:

- all coatings in the ZOI will fail
- all qualified coatings outside the ZOI remain intact unless damaged or degraded
- all unqualified coatings in containment will fail

Qualified Coatings

The original structural steel coating system applied to the SPS Units 1 and 2 containment buildings consists of one 2-mil Dry Film Thickness (DFT) coat of DuPont Corlar Epoxy Chemical Resistant Zinc Chromate Primer 825-8031 and two 2-mil DFT coats of DuPont Corlar Epoxy Chemical Resistant Semi-gloss Enamel 823 Series topcoat. The containment liner was coated with one 2 to 3-mil DFT of Carboline CZ-11 and two 2-mil DFT coats of DuPont Corlar 823 Line. There is no visual evidence to indicate any appreciable steel coating repairs having been done in the SG Loop or Pressurizer rooms.

Conservatively, 10% of coated steel area was assumed to bound the amount and type of repair coatings used for remediation and maintenance during plant life within the SG Loop or Pressurizer rooms. The maintenance coating thickness was assumed to be 12 mils, which is the thickest approved coating system. For maintenance purposes, the following coating systems have been approved for use in containment:

Carboline 193 LF / 191 HB
Carboline 191 HB
K&L 6548 / E-1-Series Epoxy Enamel (Horizon Gray No. 8392)
K&L 6548-7107 Epoxy Primer
K&L 6548-7107 / E-1-Series Epoxy Enamel
Carboline CZ11 SG
Carboline CZ11 SG / Carboline 191 HB
Carboline Carboguard 890N

The calculated qualified steel coatings debris load was increased by 7% for strainer head loss testing.

The original concrete coating, DuPont Corlar Epoxy Enamel 823 Line, was specified for vertical concrete walls to be two coats at 2.0 mils DFT each, for a total of 4.0 mils. Horizontal concrete surfaces were coated with three coats of the same product (1.0 mil prime coat and 2.0 mils for 1st and 2nd coat) for a total of 5.0 mils DFT. There is no visual evidence to indicate any appreciable concrete coating repairs having been done in the break location areas of the SG Loop or Pressurizer rooms.

Conservatively, 10% of the coated concrete area was used to bound the amount and type of repair coatings used for remediation and maintenance during plant life within the SG Loop or Pressurizer rooms. Nine percent (9%) of the repaired area had 12 mils of coating thickness without surfacers applied. The remaining 1% of the total concrete surface area was assumed to have a surfacer layer (an additional 20 mils) applied since the use of surfacers was not applied during original construction. For maintenance purposes, the following coating systems were approved for use in containment:

Carboline 195 Surfacer / 191 HB
Carboline 191 HB
Carboline 890N
Carboline 2011S / 890N

The calculated qualified concrete coatings debris load was increased by 7% for strainer head loss testing.

Per Section 3.4.3.2 of NEI 04-07, all qualified coatings within the ZOI are considered small fines. Therefore, 100% of coatings debris is modeled as transporting to the sump strainer, which is consistent with the staff position that all coatings debris is highly transportable particulate.

A surrogate, walnut shell flour, was used for testing qualified coatings. Particle densities for the particulate debris in SPS Units 1 and 2 were assumed to be equal to the typical values given in Table 3-3 of NEI 04-07. For the NRC audit at North Anna, the Staff determined that AECL testing using walnut shell flour as a surrogate was adequately representative of coatings debris generation and transportability.

Unqualified/Damaged Coatings

Unqualified and damaged coatings debris was quantified per NEI 02-01 containment walkdowns of the containment buildings for SPS Units 1 and 2. The following unqualified/damaged coatings were identified in the containment buildings of SPS Units 1 and 2:

Carboline 4674 High Temperature Silicone
Alkyd Enamel

Damaged coatings are considered to be unqualified coatings and all unqualified coatings in containment are assumed to fail.

The calculated unqualified/damaged coatings debris load was increased by 7% for strainer head loss testing.

Per Section 3.4.3.2 of NEI 04-07, all unqualified coatings within the ZOI are considered small fines. This size is also conservatively applied to unqualified and damaged coatings outside the ZOI per the SE. Therefore, 100% of coatings debris is modeled as transporting to the sump strainer, which is consistent with the staff position that all coatings debris is highly transportable particulate.

A surrogate, walnut shell flour, was used for head loss testing unqualified and damaged coatings. Particle densities for the particulate debris in SPS Units 1 and 2 were assumed to be equal to the typical values given in Table 3-3 of NEI 04-07. For the NRC audit at North Anna Unit 2, the staff determined that AECL testing using walnut shell flour as a surrogate was adequately representative of coatings debris generation and transportability.

Summary of Coatings

The following is a summary of the amount of coatings debris generated from a LOCA that is transported to the strainers. The calculated debris for coatings was increased by approximately 7% for margin.

Table 3h-1 Coating Summary

	Break S1	Break S2	Break S3
Total Qualified Coating Volume	7.97 ft^3	0.86 ft^3	7.92 ft^3
Total Damaged / Unqualified Coating Volume	1.79 ft^3	1.79 ft^3	1.79 ft^3
Totals	9.76 ft^3	2.65 ft^3	9.71 ft^3

3i - Debris Source Term

Section 5.1 of NEI 04-07 and the NRC staff's accompanying SE discuss five categories of design and operational refinements associated with the debris source term considered in the sump performance analysis.

The five categories considered are:

1. Housekeeping and foreign material exclusion (FME) programs,
2. Change-out of insulation,
3. Modification of existing insulation,
4. Modification of other equipment or systems, and
5. Modification or improvement of coatings program.

A detailed discussion of the five areas follows:

Housekeeping and FME Programs:

Housekeeping and FME programs are in place at SPS to maintain cleanliness of containment and to protect plant equipment by preventing entry of foreign material. Tags and stickers are controlled by procedure and the strainer is designed for a bounding amount of such material. Based on the NEI guidelines in NEI-04-07 and the NRC staff's accompanying SE, and the guidelines in NEI 02-01, walkdowns for foreign/miscellaneous material (labels, tags, stickers, etc.) were performed for SPS Units 1 and 2.

The observations indicated that components, such as valves, instruments, etc., were identified with metal labels attached to the component with stainless steel banding. The metal tags were procured in accordance with station specifications. The metal labels attached with stainless steel banding will remain in place when subjected to the effects of CS, and when they are attached to components located outside the ZOI of the postulated pipe break. When these labels are attached to components located within the ZOI, they will be dislodged.

However, since they are metallic and have a higher density (0.29 lbs/in3) than the sump water, they will not readily transport to the sump, and are therefore not considered a debris source.

Labels and stickers of similar size and type were found on cable trays, equipment, pipe, and concrete walls. These labels and stickers are assumed to become a source of debris under the effects of CS or when located within the ZOI. Rather than counting each type of these labels and stickers, where applicable, a typical distribution of this material was noted per floor quadrant, and this quantity was extrapolated for the whole containment. Where available, plant drawings were used to determine the quantity of commodities identified with the observed labels and stickers.

Change-Out of Insulation:

Approximately 11 linear feet of insulation was permanently removed from the SPS Unit 1 containment during the fall 2007 refueling outage. The remainder of insulation that could adversely affect the new strainer was repaired or re-jacketed with a qualified coating system. It is currently planned to remove or re-jacket approximately 277 linear feet of insulation in the SPS Unit 2 containment during the spring 2008 refueling outage.

Modify Existing Insulation:

An evaluation of the piping insulation within the SPS Units 1 and 2 containments for resolution of GSI-191 was performed. This evaluation considered the following critical attributes:

- strainer head loss
- downstream effects

The head loss approach relies upon testing performed by AECL. The work required as a result of the evaluation (re-jacketing and/or repair of insulation) was to ensure the validity of the AECL testing.

Downstream effects have two significant categories, component wear analysis and reactor vessel and fuels analysis. WCAP revisions for these areas have recently been issued. Certain types of insulation are detrimental to the successful disposition of downstream effects. The piping insulation evaluation identified piping insulation that may be replaced to support downstream effects (at a later date).

Modify Other Equipment or Systems:

SPS did not employ this refinement.

Modify or Improve Coatings Program:

SPS currently has a program in place for the control of protective coating and coating condition assessment inside containment. Program specifications, standards, and procedures have been reviewed and updated to address GSI-191. Inside containment coating is controlled by coating permits and cognizant engineering personnel.

3j - Screen Modification

Two strainer assemblies have been designed by AECL to support the RS and LHSI systems, respectively. Each assembly is separate and consists of a train of individual strainer header modules with fins and a pump suction assembly without fins. Each strainer assembly is connected to the pumps within its respective system. The replacement containment sump strainers are finned modular strainer assemblies. The RS strainer header assembly is mounted on the containment floor in and around the containment sump with the LHSI strainer header assembly mounted on top of the RS strainer assembly. The LHSI strainers are manufactured along with the RS strainers as single modules, but the LHSI and RS flow streams are separated using solid divider plates internal to the modules. Each header strainer module contains a number of fins attached to the body of the module that allows the containment sump water to flow into the header assembly to the pump suction module to the respective pumps.

The RS strainer assembly has a surface area of approximately 6220 ft^2 for Unit 1, and approximately 6260 ft^2 for Unit 2 (upon completion of installation during the spring 2008 RFO). The LHSI strainer assembly has a surface area of approximately 2180 ft^2 for the Unit 1, and approximately 2230 ft^2 for Unit 2. The strainer assemblies are fully submerged at the start of recirculation.

The strainer pump suction assembly is composed of individual solid housings that surround the respective pump suction pipe, transitions to a rectangular face, and then attaches to the respective strainer rectangular header of the pump suction assembly. The pump suction header assembly is perpendicular to the individual pump housings and has two trains that extend along the containment wall on either side of the sump outside the crane wall in the annulus area. The pump suction header connects to the respective strainer header modules. There is one pump suction header for the RS pumps and a separate pump suction header for the LHSI pumps.

The strainer header modules consist of a rectangular header that has perpendicular fins on both sides of the header. The sides of the fins are perforated corrugated stainless steel. The maximum opening size in the fins is a 0.0625 inch diameter hole. Each fin is nominally 4 inches apart (center to center distance). The RS fins are approximately 6 inches off the containment floor, which permits water to flow under the strainer and prevents "large" debris from building up around the fins thus blocking the effective flow area. Debris collects

on and between the fins and the filtered water passes through the fins and down the headers to the RS and LHSI suction pipes. The strainer assemblies are designed to prevent particles larger than 0.0625 inches wide from entering the RS and LHSI systems. The general arrangement of the strainer assemblies and modules are shown in Figures 3j-1 (SPS Unit 1) and 3j-2 (SPS Unit 2).

A single bleed line from the CS system has been connected directly to the suction header entering each ORS pump casing via a flanged connection. A single bleed line from the RS system downstream of the RS heat exchangers has been connected to the suction header entering each IRS pump casing via a flanged connection. Cold water supplied by these bleed lines is discharged into the IRS and ORS pump suctions to increase the available NPSH by reducing the temperature of the water at the pump suction. The bleed lines provide proper mixing of the containment sump water as intended since the cold water now is injected into the suction header rather than the pump casing, which allows cold water to mix prior to entering into the pump casing.

Each bleed line has been reduced in size to 2 ½-inches near the sump. An inline spring loaded flange insert type check valve is installed in each bleed line to close when its associated pump is stopped. New orifices have been sized to maintain the overall bleed line head loss identical to the existing bleed lines. The new piping configuration does not change the original design flow to the pumps.

The check valves are inline spring loaded disc type designed not to begin opening until a nominal cracking pressure of 10 psid in the normal direction of flow. Valves, spectacle flanges, and associated hardware have been installed upstream and downstream of the check valves to facilitate inservice inspection and testing requirements.

The scope of work necessary to provide sufficient clearance for the installation of the new containment sump strainer was comprised of, but not limited to modifying and/or relocating the following major items:

- CS bleed lines,
- IRS dike wall,
- Dike Wall Panel Storage Rack,
- Containment sump level instrument debris shields,
- IRS pump test return lines,
- Instrumentation and instrumentation rack interferences including tubing, conduit, drains and supports,
- Containment sump dewatering pump and associated piping,
- Lead shielding storage box, and
- RHR pipe support.

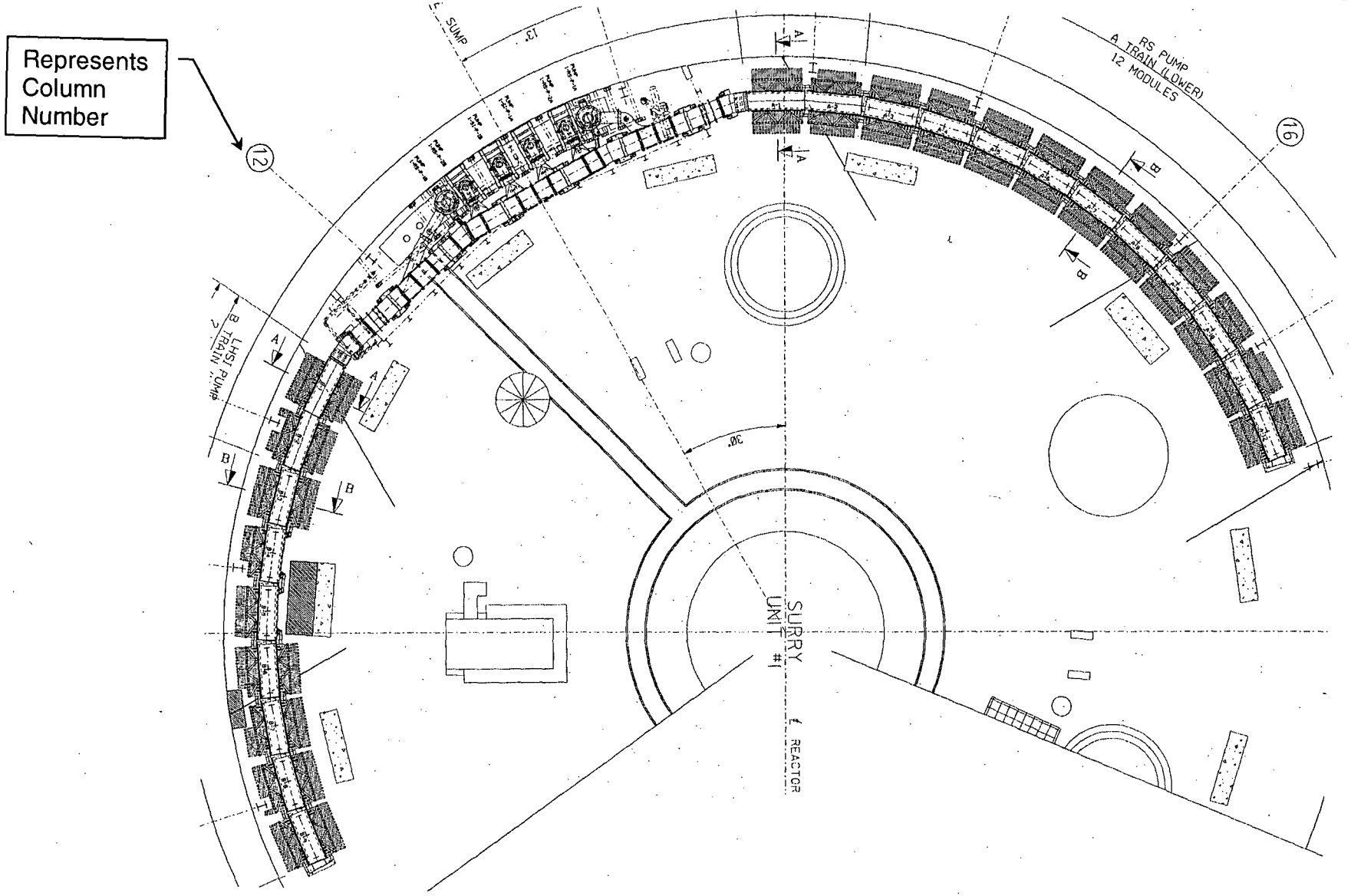

Figure 3j-1
SPS Unit 1 Strainer Layout

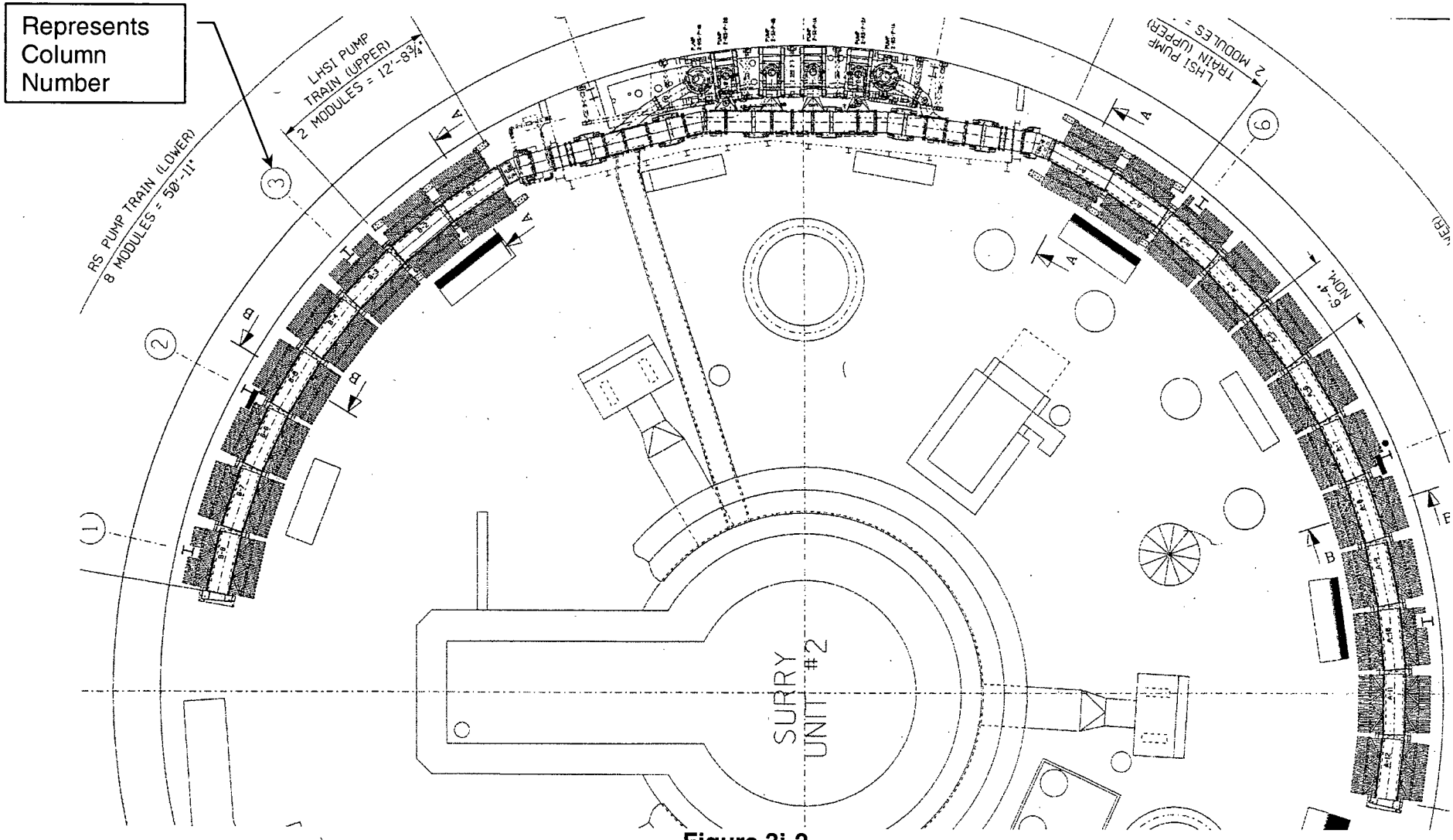

Figure 3j-2
SPS Unit 2 Strainer Layout

3k - Sump Structural Analysis

Strainer Description

The strainer consists of two trains connected to a common set of RS and LHSI pumps. Each train consists of multiple strainer modules. See Figures 3j-1 and 3j-2. A typical module comprises a box-shaped header, fins on both sides and top and bottom frames to brace the fins to the header. Each module is a welded and bolted construction fabricated from Type 304 SS. Bolting material is SA-193 B6X in friction joints and SA-193 B8 in bearing joints. Headers are essentially rectangular boxes 24" wide by 76" long with various baffles and flow deflectors inside, and slots in the side for the fins. Between adjacent fins is a bent channel. The channels form part of the pressure envelope and reinforce the header.

LHSI modules are 35" tall while RS modules are only 12.5" tall. There are two LHSI modules in each train next to the pump intake headers. These modules have two tiers: a LHSI duct on the upper level, and a separate RS duct on the lower level. Water enters the two tiers through separate parts of the full height (35" tall) fins. The shorter RS modules have only a single level, the same height as the RS portion of the two-tier modules.

The strainer modules are anchored to the floor with brackets attached to each end of the module. Each bracket in turn is connected to an anchor assembly, which is shared by two neighboring headers. Base plates are attached to the floor using concrete anchors. To provide additional stability during an earthquake, each bottom frame is also propped from the floor with three jacks, providing increased stability against side-to-side rocking of the header during an earthquake.

To allow for relative thermal expansion between the strainer modules and the reactor building, adjacent modules are installed with a gap between them, which is sealed with a flexible metallic seal. An adjustable flange with seals allows for tolerance in mounting position to suit field conditions.

The strainer modules are located inside the crane wall.

Both the RS modules and the combined LHSI/RS modules are designed such that protective cover plates can be installed if desired. The cover plate over the RS module is designed to be integral to the RS module, whereas the cover plate over the combined LHSI/RS module is designed as an independent civil structure. Installation of the cover plates is being considered as a future enhancement to the current design.

Analysis

The new strainer assembly is designed to withstand the effects of the following events applicable to the containment floor elevation of (-)27'-7": 1) an Operating

Basis Earthquake (OBE), and 2) a Safe Shutdown Earthquake (SSE) that occurs following a DBA while the strainer is in a submerged condition. The seismic response spectra for the containment elevation of (-) 5'-0" is used for the qualification of the new strainers.

The specific condition considered is an SSE that occurs while the strainer is in a submerged condition following a LOCA. The ability of the strainers to perform their safety functions during and/or after five OBE and one SSE has been demonstrated.

The structural damping is 2% for an OBE and 2% for a design basis earthquake or safe shutdown earthquake (SSE) seismic analyses.

The strainer's maximum design pressure drop is 9.0 psid. This differential pressure is conservative compared to the maximum strainer head loss determined in Section 3f. This differential pressure is the structural differential pressure drop the strainers are designed to withstand. The "Determination of Structural Differential Pressure for Containment Sump Strainers" calculation documents this analysis.

The containment maximum temperature is 280°F during a LOCA.

The design conditions for the strainer modules include dead weight, live load, suction pressure, thermal loading and seismic events.

The strainer was analyzed for the following load conditions.

Table 3k-1 – Load Conditions

Service Limits	Load Cases	Loading Combination	Category	Sump Condition	Comment
Level A	LC-1	DW+LL	Normal	Dry	Material Properties at T1
Level B	LC-2	DW+OBE	Upset	Dry	Material Properties at T1
Level C	LC-3	DW+SP+SSE+Hydrodynamics	Accident	Wet Submerged	Material Properties at T2

Notations used in Table:

DW = Deadweight
LL = Live Load = 60 psf from cover platform
OBE = Operating Basis Earthquake
SP = Differential suction pressure = 9 psid
SSE = Safe Shutdown Earthquake
Hydrodynamics = Forces from water acting on the strainer during an earthquake
T1 = Maximum air temperature under normal condition = 125°F
T2 = Maximum sump water temperature under accident condition = 280°F

Backflushing is not credited in the strainer design and analysis.

The analysis of the sump strainers was carried out to meet the design requirements of ASME III, Subsection NF for Class 3 component supports. Materials used meet the requirements of ASME II and 10CFR50 Appendix B.

SPS Units 1 and 2 were licensed to the 1971 through 1980 editions of ASME Section III. The sump strainers, however, have been designed to the 1989 edition of the ASME Subsection NF code. Relevant differences in the code editions were reconciled to ensure compliance with the 1971 through 1980 codes. The reconciliation determined that the 1989 code met or exceeded the requirements of the 1971 code.

In addition, it has been shown that deformation of the structure under the design loads will not open up additional leakage paths.

To meet the head loss requirement, the finned strainer has a large filtration area consisting of perforated sheets that have been corrugated to increase their surface area. Sheets of this screen are welded together to form hollow-core fins that are connected to a common header. This arrangement minimizes the footprint required to install the required screen area. The perforated sheet is modeled as an equivalent solid sheet with an effective Young's modulus and Poisson's ratio based on ligament efficiency. Equivalent weight density is computed based on porosity. The stresses obtained from equivalent solid plate analysis are magnified by a factor based on ligament efficiency. The membrane and membrane plus bending stresses for the LC-3 load case meet the corresponding allowables for fin components (perforated sheet, inside and outside end cap, and top/bottom plate). The fundamental frequencies for the fins were also computed. Critical buckling loads for the fins were determined and were shown to be acceptable.

Finite Element Analysis (FEA), using the ANSYS computer program, was performed in the structural qualification to verify the structural integrity of the components of the strainer assembly. For the perforated plates, equivalent solid plate analysis using the FEA model was used based on the guidance of American Society of Mechanical Engineers (ASME) Section III code, Appendix A-8000.

Stresses in Strainer Assembly

The strainers are designed to withstand the hydrodynamic loads and inertial effects of water in the containment basement, at full debris loading, without loss of structural integrity or strainer performance. Using a detailed FEA, the natural frequencies were calculated for the LHSI-RS header strainer module, combined LHSI-RS header with end plate strainer module, RS header module, RS head with end plate strainer module and pump suction header. The criteria and

allowable stresses from ASME Section III Boiler and Pressure Vessel Code were used. The membrane and membrane plus bending stresses in the top plate, bottom plate, baffle plate, deflector plates and channels for LHSI and RS strainer components for load case LC-3 were computed and shown to be acceptable.

Fatigue Analysis of Strainer Assembly

The stress analysis report stated that in accordance with paragraph NF-3121.4 of ASME Boiler and Pressure Vessel Code, section III, an evaluation for peak stress is not required implying that explicit fatigue analysis is not needed. However, fatigue considerations were included using IEEE-344 guidelines. Conservatively, a total of 60 SSE stress cycles was considered to represent 5 OBE events of 50 OBE stress cycles and 1 SSE event of 10 SSE stress cycles. For 60 cycles, the allowable alternating stress is 320 ksi for austenitic stainless steel based on the S_N curve of Appendix I of ASME Boiler and Pressure Vessel Code, Section III. Since the strainer stresses due to an SSE are much lower than 320 ksi, the stress report concluded that the strainer meets the IEEE fatigue requirements.

Thermal Expansion

For Surry Unit 1, the stress analysis report stated that slots in the finned modules and a gap in the adjustable flange between the two pump suction headers are provided to accommodate thermal expansion. Axially slotted holes with 1.5-inch long slots are provided to accommodate an axial thermal expansion of 0.144-inch following a LOCA for a 60-inch distance between slots. The thermal expansion of the 100-inch long pump suction header following a LOCA is 0.24 inches and is less than the 0.3125-inch gap provided in the adjustable flange. As the gaps are larger than the thermal expansion during a LOCA, it was concluded that thermal expansion is not restricted and hence thermal stresses need not be considered in the structural analysis of the strainer assembly.

For Surry Unit 2, the slot in the header support bracket is about 1.8 inches long, and the distance between slots is about 60 inches long. Thermal expansion of the header between slots under maximum containment air temperature following a LOCA is equal to 0.2-inch. Expansion under the maximum sump water temperature is about half of the above-calculated value. There is an installation requirement that at least ¼-inch is left in the slot to accommodate thermal expansion. As a result, thermal stress due to constraint need not be considered.

Strainer Deflection

To prevent additional leakage paths from developing, the maximum deflections in the strainers and the fins are limited to very small values. The maximum seismic displacements of the fins were calculated to be 0.00158 inches. These deflections are small, and AECL concluded that they are unlikely to cause any interference problem by interactions with existing equipment and structures.

According to the layout, the strainers and fins are well clear of existing equipment.

Strainer Module Base Plates

The AECL stress analysis report provided the base plate stress utilization ratios and anchor bolt utilization ratios for the various types of base plates, which were shown to be acceptable. These stresses were compared with the ASME 1989, Section III, Division 1, Subsection NF code stress allowable limits.

Support Bracket Connecting Bolts

The stresses in header/frame connecting bolts, saddles and support bracket connecting bolts, and bolts in the fin tabs were computed and shown to be less than the allowables.

Weld Analysis

The Surry fins have 24 spot welds. In FEA, the welds were modeled by coupling the nodal displacements. The maximum weld stresses meet the allowable stress limit.

Local Stress in Pump Housing

Local stresses in the pump housing, where a bracket is welded to the pipe on the opposite side, were evaluated by two methods. The first method is based on Bijlaard analysis as a first approximation by not taking into account the effect of the plenum opening. The second approach is based on FEA to assess the primary local stress between the support lugs and the large rectangular opening of the inlet plenum. The FEA method simulated the nonlinear behavior of the gap support under loading. The primary local stresses meet the allowable stress limits.

Hydrodynamic Mass

AECL simulated SSE hydrodynamic effects by considering the attached water mass. Added mass was determined using information from R.D. Blevins, "Formulas for Natural Frequency and Mode Shape." Added mass in the vertical direction is zero because there is no relative motion between the strainers and pool water. In the in-plane direction of the fins (transverse header direction), the mass in front of the header is approximately equal to half the volume of a cylinder, the diameter of which is equal to the clear distance between the two fins and the length equal to the height of the header. There is an equal volume of water behind the header. In the direction normal to the fin (axial header direction), the added mass is half the entrapped water between fins plus the water mass in a half cylinder spinning about the long axis of the fin and reduced by a factor depending upon the aspect ratio as given in Blevin's book.

Results

The maximum allowable stresses and design margins for various components of the new strainers are presented in Section 1.11.2, tables 1-14 through 1-29 of AECL Seismic Analysis Reports SUR1-34325-AR-002 and SUR2-34325-AR-002.

The potential for pipe whip or missile impingement and damage to the strainer was evaluated in an engineering evaluation and concluded that that the RS and LHSI strainers are sufficiently isolated/protected from LOCA and HELB piping.

The Surry TS require the station to verify by inspection once per 18 months that the RS and LHSI containment sump components are not restricted by debris and show no evidence of structural distress or abnormal corrosion.

3I - Upstream Effects

The purpose of the review of upstream effects is to ensure that SPS has appropriately accounted for potential hold up volumes, choke points, and other physical obstructions that could prevent water from draining to the basement. Any water held up by restrictions would not be available in the sump pool to provide coverage of the strainer and the required head above the strainer and would result in a reduction of NPSH margin.

Section 5.2 of the NRC audit report for North Anna (ADAMS ML072740400) contains a detailed evaluation of upstream effects. The staff concluded that water drainage in the NAPS containment would not be susceptible to being trapped in unanalyzed hold up locations. SPS has a very similar containment layout of subcompartments, walls, and flow paths from upper elevations (e.g., grating, stairwells) as North Anna. Drawings, plant procedures and engineering calculations were reviewed to identify potential water holdup locations for evaluation of containment water level and pump NPSH available. In addition, a walkdown was performed of Surry Unit 2 to assess any additional choke points or areas where water could be held up during containment spray. No additional areas were identified as part of this walkdown.

The SPS GOTHIC analysis for NPSH available makes corrections for water holdup in the refueling canal (the drain is assumed to plug and pass no water), in the reactor cavity and instrument tunnel, on condensed films and heat structures, as films on platforms and structures, and in insulation. The same analysis methodology was reviewed by the NRC during the North Anna audit. However, some of the plant-specific holdup volumes are different due to plant geometry differences. For SPS, the holdup in the refueling canal is 1720 ft3 (1850 ft3 for North Anna) and the holdup in the reactor cavity and instrument tunnel below the incore sump room drain is 2485 ft3 (2830 ft3 at North Anna).

The design change process directs the evaluation of plant changes for effects on the flow of water to the containment strainers. In addition, containment closeout procedures are being processed to direct a review for potential flow chokepoints.

3m - Downstream Effects - Components and Systems

The downstream effects evaluation is currently being prepared in accordance with the new methodologies provided in WCAP-16406-P, Revision 1 and the NRC SER. The results of the revised evaluation will be provided once the evaluation has been finalized. In a letter dated December 13, 2007, the NRC granted SPS an extension to complete the downstream effects evaluation.

An analysis of clogging for components in ECCS and RS flow streams downstream of the LHSI and RS strainers was performed to determine components susceptible to clogging and assessed clogging potential.

Also, a blockage evaluation was performed, and it was determined that the containment sump wide range level indicators could be potentially blocked by debris. Modifications were performed to increase the holes in the stilling well and to provide debris shields. The modifications are complete on SPS Unit 1. The debris shields for SPS Unit 2 will be installed during the spring 2008 RFO.

3n - Downstream Effects – Fuel and Vessel

WCAP 16793 Rev 0 has been published concerning the impact of fibrous, particulate, and chemical precipitant debris on the fuel and long-term cooling. The WCAP results provide reasonable assurance that long-term core cooling will be established and maintained post-LOCA considering the presence of debris in the RCS and core. The debris composition includes both particulate and fiber debris, as well as post-accident chemical products.

The results of WCAP 16793 are applicable to SPS Units 1 and 2. The WCAP evaluated three topical areas. They are:

- Evaluation of fuel clad temperature response to blockage at the core inlet
- Evaluation of fuel clad temperature response to local blockages or chemical precipitation on fuel clad surface
- Evaluation of chemical effects in the core region, including potential for plate-out on fuel cladding

The WCAP states that the evaluation of these three areas identified above, in conjunction with other information, provide reasonable assurance of long-term core cooling for all plants. Specifically,

- Adequate flow to remove decay heat will continue to reach the core even with debris from the sump reaching the RCS and core. Test data has demonstrated that any debris that bypasses the screen is not likely to build up

an impenetrable blockage at the core inlet. While any debris that collects at the core inlet will provide some resistance to flow, in the extreme case that a large blockage does occur, numerical analyses have demonstrated that core decay heat removal will continue.

- Decay heat will continue to be removed even with debris collection at the fuel assembly spacer grids. Test data has demonstrated that any debris that bypasses the screen is small and consequently is not likely to collect at the grid locations. Further, any blockage that may form will be limited in length and not be impenetrable to flow. In the extreme case that a large blockage does occur, numerical and first principle analyses have demonstrated that core decay heat removal will continue.
- Fibrous debris, should it enter the core region, will not tightly adhere to the surface of fuel cladding. Thus, fibrous debris will not form a "blanket" on clad surfaces to restrict heat transfer and cause an increase in clad temperature. Therefore, adherence of fibrous debris to the cladding is not plausible and will not adversely affect core cooling.
- Using an extension of the chemical effects method developed in WCAP-16530-NP to predict chemical deposition of fuel cladding, two sample calculations using large debris loadings of fiberglass and calcium silicate respectively were performed. The case demonstrated that decay heat would be removed and acceptable fuel clad temperatures would be maintained.
- As blockage of the core will not occur, the mixing volumes assumed for the current licensing basis boric acid dilution evaluations are not affected by debris and chemical products transported into the RCS and core by recirculating coolant from the containment sump. Therefore, the current accepted licensing calculations that demonstrate appropriate boric acid dilution to preclude boric acid precipitation remain valid.

As discussed below, a plant specific evaluation has been performed that confirms the applicability of all of these conclusions to SPS Units 1 and 2. Thus, the overall conclusion in the WCAP that reasonable assurance of acceptable long-term core cooling with debris and chemical products in the recirculating fluid is applicable to SPS Units 1 and 2.

Applicability of WCAP-16793-NP to Surry Units 1 and 2

Blockage at the Core Inlet

The AECL strainer design installed at SPS Units 1 and 2 has holes with a diameter of 1/16 inch (0.0625 inches). This is bounded by the assumption made in Section 2.1 of WCAP-16793-NP that the replacement strainers will have a hole diameter on the order of 0.1 inch.

Reduced scale testing conducted at AECL for SPS Units 1 and 2 has included bypass testing which determined the maximum amount of fiber bypass which

would occur for the AECL replacement strainer. Fiber bypass testing was conducted with the maximum fiber load and no added particulate. The amount of fiber that passed through the strainer was so low that for accurate determination of concentration and size, a scanning electron microscope (SEM) evaluation was required. SEM analysis of the fiber bypass test results showed that the vast majority (90%) of the fibers which bypassed the strainer were less than 1 mm long. The strainer hole size is 1/16 inch or 1.6 millimeters. Fiber bypass concentrations for the original debris composition show a near exponential decreasing trend with time. This is entirely consistent with the observations of bypass testing discussed in Section 2.1 of WCAP-16793-NP.

A bounding WCOBRA/TRAC analysis of blockage at the core inlet is contained in the WCAP. The parameters of this analysis that were selected to bound the United States Pressurized Water Reactor fleet by modeling the limiting break type which consists of a double-ended cold leg break which limits flow at the core inlet combined with the faster debris build-up that occurs for a high flow hot leg break. Also modeled was the limiting vessel design which was determined to be the Westinghouse three-loop downflow plant. As stated in Section B.1.3 of Appendix B of WCAP-16793-NP, downflow plants are the most limiting design since the only means for limited flow to enter the core is through the lower core plate. The results are directly applicable to SPS Units 1 and 2 since they are Westinghouse three loop downflow plants. Thus, the WCOBRA/TRAC analysis presented in WCAP-16793-NP is directly applicable to SPS Units 1 and 2.

The WCOBRA/TRAC analysis demonstrates that sufficient liquid can enter the core to remove core decay heat once the plant has switched to sump recirculation with up to 99.4 percent blockage at the core inlet.

Collection of Debris on Fuel Grids

As discussed above, the bypass testing of the AECL strainer design is entirely consistent with the WCAP conclusion that it is unlikely that the combination of fibrous and particulate debris will collect in numerous grid locations to restrict flow sufficiently such that long-term core cooling is challenged.

The WCAP contains ANSYS and first-principle calculations that demonstrate that the fuel rods will continue to be cooled even with significant blockages around the fuel grids. These analyses demonstrated that even with a completely blocked grid strap, core decay heat was adequately removed. As stated in Section C.4 of Appendix C to WCAP-16793-NP, the parameters for these calculations were derived from the WCOBRA/TRAC analysis, the results of which bound post-LOCA long-term core cooling clad temperatures for the entire United States Pressurized Water Reactor fleet. Thus, these calculations bound SPS Units 1 and 2 and the conclusion that numerical and first principle analyses have demonstrated that core decay heat removal will continue applies to SPS Units 1 and 2.

Collection of Fibrous Material on Fuel Cladding

The WCAP refers to generic information for NEA.CNSI/R (95)11 "Knowledge Base for Emergency Core Cooling System Recirculation Reliability," February 1996 to support the conclusion that fibrous debris, should it enter the core region, will not tightly adhere to the surface of fuel cladding. The report reflects testing applicable to both NUKON and Knauf ET Panels. This is representative of the fibrous debris expected at SPS Units 1 and 2 and thus the conclusions of the WCAP are applicable to SPS Units 1 and 2.

Chemical Deposition on the Fuel Cladding

The WCAP documents an Excel spreadsheet called LOCADM that will calculate the deposition of chemical precipitants and the resultant maximum clad temperature. Preparation of a SPS calculation is in progress. When finalized, it is expected that the SPS specific calculation will confirm the conclusion of the WCAP that acceptable long-term core cooling in the presence of core deposits is applicable to SPS Units 1 and 2. This calculation is scheduled to be completed by the end of March 2008.

Boric Acid Precipitation

As discussed above, the evaluation of the potential for blockage for SPS Units 1 and 2 is entirely consistent with the evaluations documented in the WCAP. Since blockage will not occur for SPS Units 1 and 2, the WCAP conclusion that the current accepted licensing calculations that demonstrate appropriate boric acid dilution to preclude boric acid precipitation remains valid is applicable to SPS Units 1 and 2.

Summary

This evaluation demonstrates that all of the WCAP evaluations and conclusions are directly applicable to SPS Units 1 and 2. This provides reasonable assurance that for SPS Units 1 and 2 long-term core cooling will be established and maintained post-LOCA considering the presence of debris in the RCS and core.

3o - Chemical Effects

The objective of the chemical effects section is to evaluate the effect that chemical precipitates have on head loss and core cooling.

The resolution of chemical effects at SPS 1 and 2 has three main components. They are:

- An assessment of potential precipitates includes determination of reactive material amounts present in the containment sump pool, pH and

temperature profiles in containment, and a review of existing test and scientific literature data. This determines which precipitates are likely to form in the post-LOCA sump pool. This assessment is complete.

- Bench Top Testing determines potential precipitates. *(In progress)*
- Reduced Scale Testing determines head loss due to potential precipitates. *(In progress)*

Overall Chemical Effects Strategy:

Westinghouse has published WCAP-16530, Rev. 0, which the NRC staff has accepted as a conservative methodology to evaluate head loss due to post-accident chemical precipitates. Dominion has contracted with AECL to perform an assessment of potential chemical precipitates in the sump pool that may contribute to head loss. This assessment by AECL uses plant specific data on reactive materials, sump water volume, and post-LOCA debris constituents, bench top and precipitation test results from the WCAP-16530, ICET test results, results from NRC sponsored research on chemical effects, and a thorough literature survey to determine the precipitates likely to form in the SPS 1 and 2 containment sump pools post-LOCA.

The AECL assessment will be followed by appropriate bench top tests to verify the formation or lack of formation of expected precipitates. If necessary, reduced scale testing will be done to determine the impact of precipitate formation on debris bed head loss. It is expected that the precipitates formed would be added to the reduced scale test tank after a debris bed had formed to conservatively determine the long-term head loss in the tank.

The chemical effects evaluation is ongoing, and the results of the revised evaluation will be provided at a later date, consistent with the schedule extension granted by the NRC in a letter dated December 13, 2007, when the evaluation has been finalized.

3p - Licensing Basis

The objective of the licensing basis section is to provide information regarding any changes to the plant licensing basis due to the sump evaluation or plant modifications. Several licensing basis changes associated with resolution of the sump issues considered in GSI-191 and GL 2004-02 have been implemented for SPS Units 1 and 2 in the form of UFSAR revisions, analysis methodology changes and license amendment requests.

UFSAR

The SPS UFSAR has been revised to reflect the installation of the new containment strainers for the RS and LHSI pumps, as well as the adoption and

application of the GOTHIC code for containment analysis. However, the current licensing basis for debris loading is being maintained until the downstream effects and chemical effects analyses have been completed, as well as any accompanying modifications, if required. Upon completion of these activities, the UFSAR will be revised to reflect the updated licensing basis.

Containment Analysis Methodology

The method for performing SPS containment analyses for analyzing the response to postulated pipe ruptures inside containment was changed by converting from the Stone and Webster LOCTIC computer code to the Generation of Thermal-Hydraulic Information for Containments (GOTHIC) code. In a letter dated November 1, 2005 (Serial No. 05-745) (ADAMS ML053060266), Dominion submitted Topical Report DOM-NAF-3, "GOTHIC Methodology for Analyzing the Response to Postulated Pipe Ruptures Inside Containment," which documents the Dominion methodology for analyzing the containment response to postulated pipe ruptures using the GOTHIC code. The NRC approved Topical Report DOM-NAF-3 in a letter dated August 30, 2006 (ADAMS ML062420511). SPS plant-specific applications of the DOM-NAF-3 methodology to effect GSI-191 changes associated with the RS pump start method and the containment air partial pressure operating limits, as noted below, were then implemented through the license amendment process.

License Amendment Requests

License amendment requests have been submitted for NRC review and approval in support of the installation of the new strainers and the resolution of GSI-191 and NRC GL 2004-02. As detailed further below, the NRC has approved the license amendment requests, and Dominion has implemented the approved license amendments.

1. A license amendment request was submitted by letter dated January 31, 2006 (Serial No. 06-014) (ADAMS ML060370098) to accomplish the following items:
    - Revise the method for starting the inside and outside recirculation spray (RS) pumps in response to a design basis accident (DBA). Previously, the SPS RS pumps were started by delay timers that were initiated when the containment pressure reached the Consequence Limiting Safeguards (CLS) High High containment pressure setpoint. The license amendment request changed the start of the RS pumps to the receipt of a CLS High High pressure signal coincident with a refueling water storage tank (RWST) Level Low signal. This change ensures that adequate water volume is available to submerge the new containment sump strainer, prior to the pumps taking suction from the strainer, and meets the safety analysis acceptance criteria. The revised TS surveillance requirements verify that each RS pump automatically starts on a CLS High High test

signal coincident with the receipt of an RWST Level Low test signal and are consistent with Improved Standard Technical Specifications Change Traveler, TSTF-286-A, Revision 2 and NUREG 1431, Westinghouse Owners Group Standard Technical Specifications, Revision 3, March 31, 2004. A plant modification associated with the license amendment request was required to install the new RS pump start circuitry.

- Replace the LOCTIC containment analysis methodology for analyzing the response to postulated pipe ruptures inside containment, including loss of coolant accident (LOCA) and main steam line break (MSLB) events, with the NRC-approved GOTHIC evaluation methodology discussed in Dominion Topical Report DOM-NAF-3-0.0-P-A. The change to the GOTHIC code provides margin in LOCA peak containment pressure and other accident analysis results.
- Increase the TS containment air partial pressure operating limits based on the GOTHIC containment analyses.
- Revise the LOCA Alternate Source Term (AST) analysis to include the effects from changing the RS pump start methodology and from the other modifications associated with the GSI-191 project.
- The NRC approved the license amendment request for SPS Units 1 and 2 in Amendments 250/249, respectively, in a letter dated October 12, 2006 (ADAMS ML062920499). Implementation of this change was completed during the fall 2006 refueling outage for SPS Unit 2 and during the fall 2007 refueling outage for SPS Unit 1.

2. A license amendment request was submitted by letter dated October 3, 2006 (Serial No. 06-791) (ADAMS ML062770208) to revise the TS surveillance requirements related to inspection of the containment sump trash racks and screens, inside RS pump wells, and outside RS and LHSI pump suction inlets. The new sump strainer design uses modular strainer assemblies and hard-piped connections for the RS and LHSI pumps to meet the new design requirements and eliminates the sump trash racks and screens. Therefore, the specific TS surveillance discussion associated with the inspection of the containment sump trash racks and screens, pump wells, and pump suction inlets was replaced with inspection requirements more appropriate to the new containment sump strainer design. The NRC approved the license amendment request for SPS Units 1 and 2 in Amendments 255/254, respectively, in a letter dated October 15, 2007 (ADAMS ML072690396). Implementation of this change was completed for both units during the fall 2007 SPS Unit 1 refueling outage.

3. A license amendment request was submitted by letter dated October 22, 2007 (Serial No. 07-0693) [as supplemented by letters dated October 24, 2007 (Serial No. 07-693A) (ADAMS ML072970605); November 2, 2007 (Serial No. 07-393B) (ADAMS ML073100827); and November 9, 2007 (Serial No. 07-693C)] to permit the use of an alternate GOTHIC containment analysis

methodology to that previously approved. Specifically, the alternate GOTHIC containment analysis reduced certain overly conservative assumptions to more realistically, yet conservatively, address expected plant conditions in containment following a LOCA. The alternate method relaxed some of the conservatisms in the NPSH analysis methodology in Topical Report DOM-NAF-3-0.0-P-A. The alternate methodology was used to develop revised design inputs for the hydraulic analysis of the RS strainer during early RS pump operation after a LOCA. The NRC approved the license amendment request for SPS Units 1 and 2 in Amendments 256/255, respectively, in a letter dated November 15, 2007 (ADAMS ML073120506). Implementation of this change was completed for both units during the fall 2007 SPS Unit 1 refueling outage.

ATTACHMENT

RESPONSE TO NRC REQUEST FOR ADDITIONAL INFORMATION

VIRGINIA ELECTRIC AND POWER COMPANY
(DOMINION)
SURRY POWER STATION UNITS 1 AND 2

RESPONSE TO NRC REQUEST FOR ADDITIONAL INFORMATION SURRY POWER STATION UNITS 1 AND 2

NRC RAI # 1

Identify the name and bounding quantity of each insulation material generated by a large-break loss-of-coolant accident (LBLOCA). Include the amount of these materials transported to the containment pool. State any assumptions used to provide this response.

Dominion Response

Refer to Sections 3b and 3e of the supplemental response for information on the quantity of each insulation debris generated by a large-break loss-of-coolant accident and transported to the strainers.

NRC RAI # 2

Identify the amounts (i.e., surface area) of the following materials that are:
(a) Submerged in the containment pool following a LOCA,
(b) In the containment spray zone following a LOCA,
  i. Aluminum
  ii. Zinc (from galvanized steel and from inorganic zinc coatings)
  iii. Copper
  iv. Carbon steel not coated
  v. Uncoated concrete
(c) Compare the amounts of these materials in the submerged and spray zones at your plant relative to the scaled amounts of these materials used in the Nuclear Regulatory Commission (NRC) nuclear industry jointly-sponsored Integrated Chemical Effects Tests (ICET) (e.g., 5x the amount of uncoated carbon steel assumed for the ICETs).

Dominion Response

The chemical effects evaluation is ongoing, and the results of the revised evaluation will be provided at a later date when the evaluation has been finalized. An extension has been granted in a letter dated December 13, 2007 in reference to the chemical effects evaluation.

NRC RAI # 3

Identify the amount (surface area) and material (e.g., aluminum) for any scaffolding stored in containment. Indicate the amount, if any, that would be submerged in the containment pool following a LOCA. Clarify if scaffolding material was included in the response to Question 2.

Dominion Response

The scaffolding used inside the containment at SPS is galvanized steel scaffolding. Based on information presented in WCAP-16530-NP, Revision 0, the principal chemical species of interest for the chemical effects tests are aluminum, silicon, and calcium. Zinc is not a significant contributor to precipitate generation, and therefore was not included in the materials that are submerged or in the containment spray zone.

The chemical effects evaluation is ongoing, and the results of the revised evaluation will be provided at a later date when the evaluation has been finalized. The NRC granted an extension to complete the chemical effects evaluation in a letter dated December 13, 2007.

NRC RAI # 4

Provide the type and amount of any metallic paints or non-stainless steel insulation jacketing (not included in the response to Question 2) that would be either submerged or subjected to containment spray.

Dominion Response

The types of metallic paints in containment are presented in section 3h.

The original construction insulation specification specified the use of a 1925 glass cloth fabric jacketing insulation system. This jacketing system has been jacketed with stainless steel jacketing for Surry Unit 1. This effort is planned for Surry Unit 2 during the spring 2008 RFO.

The current specification for the installation of insulation at SPS states that: "The surface covering for insulation inside containment shall be Type 304 stainless steel. (S.S.)" and that: "The quantity of unjacketed insulation inside containment is to be kept to a minimum." However, to maintain dose As Low as Reasonable Achievable (ALARA) the specification allows jacketing (on a case by case basis) with a fiberglass cloth or silicone impregnated fiberglass fabric with stainless steel mesh for difficult or time consuming jacketing jobs in high radiation areas. Use of this jacketing in lieu of S.S. requires an Engineering evaluation for High Energy Line Breaks (HELB) and debris generation.

Refer to section 3b of the supplemental response for the amount of debris-generated insulation jacketing.

If the insulation jacketing and metallic coating is required to be addressed by chemical effects, this will be addressed when the evaluation has been finalized. The chemical effects evaluation is currently ongoing, and the results of the revised evaluation will be provided at a later date when the evaluation has been

finalized. The NRC granted an extension to complete the chemical effects evaluation in a letter dated December 13, 2007.

NRC RAI # 5

Provide the expected containment pool pH during the emergency core cooling system (ECCS) recirculation mission time following a LOCA at the beginning of the fuel cycle and at the end of the fuel cycle. Identify any key assumptions.

Dominion Response

The chemical effects evaluation is ongoing, and the results of the revised evaluation will be provided at a later date when the evaluation has been finalized. The NRC granted an extension to complete the chemical effects evaluation in a letter dated December 13, 2007.

NRC RAI # 6

For the ICET environment that is the most similar to your plant conditions, compare the expected containment pool conditions to the ICET conditions for the following items: boron concentration, buffering agent concentration, and pH. Identify any other significant differences between the ICET environment and the expected plant-specific environment.

Dominion Response

The chemical effects evaluation is ongoing, and the results of the revised evaluation will be provided at a later date when the evaluation has been finalized. The NRC granted an extension to complete the chemical effects evaluation in a letter dated December 13, 2007.

NRC RAI # 7

For a LBLOCA, provide the time until ECCS external recirculation initiation and the associated pool temperature and pool volume. Provide estimated pool temperature and pool volume 24 hours after a LBLOCA. Identify the assumptions used for these estimates.

Dominion Response

This information was requested with respect to chemical effects. Dominion's chemical effects evaluation is ongoing, and the results of this evaluation will include this information. The chemical effects evaluation will be provided to the NRC at a later date when the evaluation has been finalized. The NRC granted an extension to complete the chemical effects evaluation in a letter dated December 13, 2007.

NRC RAI # 8

Discuss your overall strategy to evaluate potential chemical effects including demonstrating that, with chemical effects considered, there is sufficient net positive suction head (NPSH) margin available during the ECCS mission time. Provide an estimated date with milestones for the completion of all chemical effects evaluations.

Dominion Response

The chemical effects evaluation is ongoing, and the results of the revised evaluation will be provided at a later date when the evaluation has been finalized. The NRC granted an extension to complete the chemical effects evaluation in a letter dated December 13, 2007.

NRC RAI # 9

Identify, if applicable, any plans to remove certain materials from the containment building and/or to make a change from the existing chemicals that buffer containment pool pH following a LOCA.

Dominion Response

The chemical effects evaluation is ongoing, and the results of the revised evaluation will be provided at a later date when the evaluation has been finalized. The NRC granted an extension to complete the chemical effects evaluation in a letter dated December 13, 2007.

NRC RAI # 10

If bench-top testing is being used to inform plant specific head loss testing, indicate how the bench-top test parameters (e.g., buffering agent concentrations, pH, materials, etc.) compare to your plant conditions. Describe your plans for addressing uncertainties related to head loss from chemical effects including, but not limited to, use of chemical surrogates, scaling of sample size and test durations. Discuss how it will be determined that allowances made for chemical effects are conservative.

Dominion Response

The chemical effects evaluation is ongoing, and the results of the revised evaluation will be provided at a later date when the evaluation has been finalized. The NRC granted an extension to complete the chemical effects evaluation in a letter dated December 13, 2007.

NRC RAI #11

Provide a detailed description of any testing that has been or will be performed as part of a plant-specific chemical effects assessment. Identify the vendor, if applicable, that will be performing the testing. Identify the environment (e.g., borated water at pH9, deionized water, tap water) and test temperature for any plant-specific head loss or transport tests. Discuss how any differences between these test environments and your plant containment pool conditions could affect the behavior of chemical surrogates. Discuss the criteria that will be used to demonstrate that chemical surrogates produced for testing (e.g., head loss, flume) behave in a similar manner physically and chemically as in the ICET environment and plant containment pool environment.

Dominion Response

The chemical effects evaluation is ongoing, and the results of the revised evaluation will be provided at a later date when the evaluation has been finalized. The NRC granted an extension to complete the chemical effects evaluation in a letter dated December 13, 2007.

NRC RAI #12

For your plant-specific environment, provide the maximum projected head loss resulting from chemical effects (a) within the first day following a LOCA, and (b) during the entire ECCS recirculation mission time. If the response to this question will be based on testing that is either planned or in progress, provide an estimated date for providing this information to the NRC.

Dominion Response

The chemical effects evaluation is ongoing, and the results of the revised evaluation will be provided at a later date when the evaluation has been finalized. The NRC granted an extension to complete the chemical effects evaluation in a letter dated December 13, 2007.

NRC RAI # 13

Results from the ICET #1 environment and the ICET #5 environment showed chemical products appeared to form as the test solution cooled from the constant 140°F test temperature. Discuss how these results are being considered in your evaluation of chemical effects and downstream effects.

Dominion Response

The chemical effects evaluation is ongoing, and the results of the revised evaluation will be provided at a later date when the evaluation has been finalized.

The NRC granted an extension to complete the chemical effects evaluation in a letter dated December 13, 2007.

NRC RAI # 25

Describe how your coatings assessment was used to identify degraded qualified/acceptable coatings and determine the amount of debris that will result from these coatings. This should include how the assessment technique(s) demonstrates that qualified/acceptable coatings remain in compliance with plant licensing requirements for design basis accident (DBA) performance. If current examination techniques cannot demonstrate the coatings' ability to meet plant licensing requirements for DBA performance, licensees should describe an augmented testing and inspection program that provides assurance that the qualified/acceptable coatings continue to meet DBA performance requirements. Alternately, assume all containment coatings fail and describe the potential for this debris to transport to the sump.

Dominion Response

The SPS containment buildings were walked down to assess existing coatings, which might fail under normal or LOCA accident conditions and contribute to the Containment Sump debris load. Enercon Services and Dominion Material and Inspection personnel performed this baseline coating walkdown using visual examination techniques and guidance from Nuclear Energy Institute NEI 02.01, which incorporates NUREG-1801 and ASTM D5163. A Fleet containment coating condition assessment procedure has been developed. Periodic inspections in accordance with the coating condition assessment procedure are performed each refueling outage to ensure that coatings remain in compliance with plant licensing requirements for DBA performance.

The Electric Power Research Institute (EPRI) conducted a project to collect coating adhesion data for coating systems applied in the containments of operating U.S. nuclear power plants to provide confirmatory support for ASTM coating inspection methods that rely upon visual inspection as an initial step. The EPRI report concludes that: "When tested using an Elcometer pull-off adhesion tester 2, aged DBA-qualified/acceptable coatings (with no visual anomalies) from various manufacturers tested at the four volunteer plants in all instances exhibited system pull-off adhesion at or in excess of the originally specified (ANSI N5.12-1972) minimum value of 200 psi...Based on this testing, it is concluded that the containment coating monitoring approach contained in ASTM D 5163, as implemented by licensees, and endorsed by the USNRC in RG 1.54 Rev. 1 and NUREG 1801 Volume 2, Appendix XI.S8, is valid."

NRC RAI # 29

Your GL response indicates that you may pursue a reduction in the radius of the zone of influence (ZOI) for coatings. Identify the radius of the coatings ZOI that will be used for your final analysis. In addition, provide the test methodology and data used to support your proposed ZOI. Provide justification regarding how the test conditions simulate or correlate to actual plant conditions and will ensure representative or conservative treatment in the amounts of coatings debris generated by the interaction of coatings and a two-phase jet. Identify all instances where the testing or specimens used deviated from actual plant conditions (i.e., irradiation of actual coatings vice samples, aging differences, etc.). Provide justification regarding how these deviations are accounted for with the test demonstrating the proposed ZOI.

Dominion Response

See Section 3h of the supplemental response for information concerning the ZOIs used at SPS for coatings.

NRC RAI # 30

The NRC staff's safety evaluation (SE) addresses two distinct scenarios for formation of a fiber bed on the sump screen surface. For a thin bed case, the SE states that all coatings debris should be treated as particulate and assumes 100% transport to the sump screen. For the case in which no thin bed is formed, the staff's SE states that the coatings debris should be sized based on plant-specific analyses for debris generated from within the ZOI and from outside the ZOI, or that a default chip size equivalent to the area of the sump screen openings should be used (Section 3.4.3.6). Describe how your coatings debris characteristics are modeled to account for your plant-specific fiber bed (i.e., thin bed or no thin bed). If your analysis considers both a thin bed and a non-thin bed case, discuss the coatings debris characteristics assumed for each case. If your analysis deviates from the coatings debris characteristics described in the staff-approved methodology, provide justification to support your assumptions.

Dominion Response

SPS is classified as a high fiber plant, and therefore postulates that a high head loss thin bed could form in accordance with the NRC SE guidance. Plant specific head loss testing treated all coating as particulate. Refer to Section 3f of the supplemental response for additional details.

NRC RAI # 31

Your submittal indicated that you had taken samples for latent debris in your containment, but did not provide any details regarding the number, type, and location of samples. Please provide these details.

Dominion Response

Refer to Section 3d of the supplemental response for information concerning latent debris samples.

NRC RAI # 32

Your submittal did not provide details regarding the characterization of latent debris found in your containment as outlined in the NRC SE. Please provide these details.

Dominion Response

Refer to Section 3d of the supplemental response for information concerning latent debris characterization.

NRC RAI # 33

Will latent debris sampling become an ongoing program?

Dominion Response

Due to the large fibrous debris load in the SPS Units 1 and 2 containments, latent debris is a relatively small contributor to strainer head loss. A thorough latent debris inventory was done, and a conservative bounding number was chosen for the debris calculations. Latent debris will be adequately controlled through housekeeping and containment cleanup. Latent debris will be sampled and quantified in accordance with the fleet latent debris collection procedure.

Changes to the plant housekeeping procedure and to the containment closeout procedure have been made to describe containment housekeeping expectations for worksites and the general containment areas with regards to GSI-191 design basis.

NRC RAI # 34

You indicated that you would be evaluating downstream effects in accordance with WCAP 16406-P. The NRC is currently involved in discussions with the Westinghouse Owner's Group (WOG) to address questions/concerns regarding this WCAP on a generic basis, and some of these discussions may resolve

issues related to your particular station. The following issues have the potential for generic resolution; however, if a generic resolution cannot be obtained, plant-specific resolution will be required. As such, formal RAIs will not be issued on these topics at this time, but may be needed in the future. It is expected that your final evaluation response will specifically address those portions of the WCAP used, their applicability, and exceptions taken to the WCAP. For your information, topics under ongoing discussion include:

(a) Wear rates of pump-wetted materials and the effect of wear on component operation
(b) Settling of debris in low flow areas downstream of the strainer or credit for filtering leading to a change in fluid composition
(c) Volume of debris injected into the reactor vessel and core region
(d) Debris types and properties
(e) Contribution of in-vessel velocity profile to the formation of a debris bed or clog
(f) Fluid and metal component temperature impact
(g) Gravitational and temperature gradients
(h) Debris and boron precipitation effects
(i) ECCS injection paths
(j) Core bypass design features
(k) Radiation and chemical considerations
(l) Debris adhesion to solid surfaces
(m) Thermodynamic properties of coolant

Dominion Response

The downstream effects (wear) evaluation is currently being revised to incorporate new methodologies provided in WCAP-16406-P, Revision 1 and the NRC SER. The results of the revised evaluation will be provided at a later date when the calculation has been finalized. The NRC granted SPS an extension to complete the downstream effects evaluation for components and systems in a letter dated December 13, 2007.

NRC RAI # 35

Your response to GL 2004-02 question (d)(viii) indicated that an active strainer design will not be used, but does not mention any consideration of any other active approaches (i.e., back flushing). Was an active approach considered as a potential strategy or backup for addressing any issues?

Dominion Response

Dominion considered an active strainer design, but abandoned the concept for the inherent reliability of a robust passive design. No further active approaches are being considered at this time.

NRC RAI # 36

You stated that for materials for which no ZOI values were provided in the Nuclear Energy Institute (NEI) guidance report or the staff SE, conservative ZOI values are applied. Please provide a listing of the materials for which this ZOI approach was applied and the technical reasoning for concluding the value applied is conservative.

Dominion Response

Refer to Section 3b of the supplemental response for information on ZOI values applied for debris generation.

NRC RAI # 37

You did not provide information on the details of the debris characteristics assumed in their evaluations other than to state the NEI and SE methodologies were applied. Please provide a description of the debris characteristics assumed in these evaluations and include a discussion of the technical justification for deviations from the SE-approved methodology.

Dominion Response

Refer to Section 3c of the supplemental response for detail of debris characteristics.

NRC RAI # 38

Has debris settling upstream of the sump strainer (i.e., the near-field effect) been credited or will it be credited in testing used to support the sizing or analytical design basis of the proposed replacement strainers? In the case that settling was credited for either of these purposes, estimate the fraction of debris that settled and describe the analyses that were performed to correlate the scaled flow conditions and any surrogate debris in the test flume with the actual flow conditions and debris types in the plant's containment pool.

Dominion Response

Refer to Section 3e of the supplemental response for details concerning debris settling.

NRC RAI # 39

Are there any vents or other penetrations through the strainer control surfaces which connect the volume internal to the strainer to the containment atmosphere above the containment minimum water level? In this case, dependent upon the

containment pool height and strainer and sump geometries, the presence of the vent line or penetration could prevent a water seal over the entire strainer surface from ever forming; or else this seal could be lost once the head loss across the debris bed exceeds a certain criterion, such as the submergence depth of the vent line or penetration. According to Appendix A to Regulatory Guide 1.82, Revision 3, without a water seal across the entire strainer surface, the strainer should not be considered to be fully "submerged." Therefore, if applicable, explain what sump strainer failure criteria are being applied for the "vented sump" scenario described above.

Dominion Response

The bleed lines penetrate the control surface of the strainer and connect the volume internal to the strainer with the containment atmosphere above the minimum water level through the bleed lines connected to the spray nozzle headers. Communication between the containment sump strainer and the containment atmosphere through the spray header nozzles is prevented by in line spring loaded check valves installed in the bleed lines. Otherwise, the strainer is fully submerged.

NRC RAI # 40

What is the basis for concluding that the refueling cavity drain(s) would not become blocked with debris? What are the potential types and characteristics of debris that could reach these drains? In particular, could large pieces of debris be blown into the upper containment by pipe breaks occurring in the lower containment, and subsequently drop into the cavity? In the case that large pieces of debris could reach the cavity, are trash racks or interceptors present to prevent drain blockage? In the case that partial/total blockage of the drains might occur, do water hold-up calculations used in the computation of NPSH margin account for the lost or held-up water resulting from debris blockage?

Dominion Response

Refer to Section 3l of the supplemental response for the evaluation of this RAI.

NRC RAI # 41

What is the minimum strainer submergence during the postulated LOCA? At the time that the re-circulation starts, most of the strainer surface is expected to be clean, and the strainer surface close to the pump suction line may experience higher fluid flow than the rest of the strainer. Has any analysis been done to evaluate the possibility of vortex formation close to the pump suction line and possible air ingestion into the ECCS pumps? In addition, has any analysis or test been performed to evaluate the possible accumulation of buoyant debris on top

of the strainer, which may cause the formation of an air flow path directly through the strainer surface and reduce the effectiveness of the strainer?

Dominion Response

Refer to Section 3f of the supplemental response for the resolution of this RAI.

NRC RAI # 42

The September 2005 GL response stated that the licensee performed computational fluid dynamics analysis of which outputs included global (entire containment) and local (near sump pit) velocity contours, turbulent kinetic energy contours, path lines and flow distributions for various scenarios. Please explain how you used these outputs to determine the amount of debris that transports to the sump screen.

Dominion Response

Refer to Section 3e of the supplemental response for information concerning the CFD analysis and its effect on debris transport.

NRC RAI # 43

In GL 2004-02, item 2.d.iv, the NRC requested licensees to provide the basis for concluding that the water inventory required to ensure adequate ECCS or Containment Spray System recirculation would not be held up or diverted by debris blockage at choke-points in containment recirculation sump return flowpaths. SPS responded that even though no choke-points of flow diversions were identified, the licensee may choose to perform additional verification walkdowns for Unit 1. Provide a date when the NRC will get a supplemental response (if additional walkdowns identify choke points or flow diversions) with the results of the verification walkdowns.

Dominion Response

Subsequent to the Surry response to GL 2004-02 dated September 1, 2005, additional walkdowns were not performed to specifically review potential chokepoints in containment for the GSI-191 project. Ongoing programs, such as the design change process and containment closeout procedures, are in place to evaluate plant changes that may create new chokepoints or holdup areas that could affect the assumed holdup volumes.