Duke Energy®

JAMES R MORRIS
Vice President

Catawba Nuclear Station
4800 Concord Road / CN01VP
York, SC 29745-9635

803 831 4251
803 831 3221 fax

February 29, 2008

U. S. Nuclear Regulatory Commission
Washington, DC 20555-0001
ATTENTION: Document Control Desk

SUBJECT: Duke Energy Corporation
Catawba Nuclear Station, Units 1 and 2
Docket Nos. 50-413 and 50-414
NRC Generic Letter 2004-02, "Potential Impact of Debris Blockage on Emergency Recirculation During Design Basis Accidents at Pressurized-Water Reactors"

On September 13, 2004, the Nuclear Regulatory Commission (NRC) issued Generic Letter (GL) 2004-02. The GL requested that all pressurized-water reactor (PWR) licensees (1) evaluate the adequacy of the emergency sump recirculation function with respect to potentially adverse effects associated with post-accident debris, and (2) implement any plant modifications determined to be necessary.

By letter dated March 1, 2005, as supplemented by letters dated September 1, 2005 and June 28, 2006, Duke Power Company, LLC d.b.a. Duke Energy Carolinas, LLC (Duke) provided responses to GL 2004-02. By letter dated February 9, 2006, the NRC determined that additional information was necessary in order for the Staff to complete their review of Catawba's information. Catawba's responses to these requests for additional information are contained in Enclosure 1.

On November 30, 2007, the NRC issued a letter to NEI authorizing all PWR licensees up to two months beyond December 31, 2007 (i.e., to February 29, 2008), to provide the supplemental responses to the NRC.

Additionally, by letter dated November 21, 2007, the NRC staff issued a revised "Content Guide for Generic Letter 2004-02 Supplemental Responses" for the use by PWR licensees in developing their GL 2004-02 responses. Catawba's supplemental responses are contained in Enclosure 2.

As stated by Duke's letter of December 7, 2007, any additional or revised information resulting from the Integrated Prototype (chemical effects) Testing will be provided as an amended response to GL 2004-02 by April 30, 2008. This extension was approved by

A116
NRR

the staff in a letter dated December 28, 2007. Additionally, as requested within this approval letter, Duke will provide additional information related to the NRC staff-requested evaluation of WCAP-16406, Revision 1 dated August 2007.

Duke understands that the NRC staff will consider this set of additional information and will issue a letter to Duke Energy assessing the overall adequacy of the Catawba Nuclear Station's GL 2004-02 corrective actions.

If any questions arise or additional information is needed, please contact A. P. Jackson at (803) 831-3742.

Very truly yours,

James R. Morris

Enclosures

James R. Morris affirms that he is the person who subscribed his name to the foregoing statement, and that all the matters and facts set forth herein are true and correct to the best of his knowledge.

James R. Morris, Vice President, Catawba Nuclear Station

Subscribed and sworn to me: 2/29/08
Date

Anthony P. Jackson, Notary Public

My commission expires: 7/2/2014
Date

SEAL

xc (with enclosures):

Victor M. McCree (Acting), Region II Administrator
U.S. Nuclear Regulatory Commission
Sam Nunn Atlanta Federal Center, 23 T85
61 Forsyth St., SW
Atlanta, GA 30303-8931

J. F. Stang, Jr., Senior Project Manager (CNS & MNS)
U. S. Nuclear Regulatory Commission
11555 Rockville Pike
Mail Stop 8 G9A
Rockville, MD 20852-2738

A. T. Sabisch
Senior Resident Inspector
U. S. Nuclear Regulatory Commission
Catawba Nuclear Station

S. E. Jenkins, Manager
Division of Radioactive Waste Management
Bureau of Land and Waste Management
Department of Health and Environmental Control
2600 Bull Street
Columbia, SC 29201

bxc (with enclosures):

J. R. Morris (CN01VP)
J. W. Pitesa (CN01SM)
T. M. Hamilton (CNS01SA)
R. D. Hart (CN01RC)
R. L. Gill (EC05P)
A. P. Jackson (CN01RC)
K. L. Ashe (MG01RC)
R. S. Lytton (MG05SE)
G. A. Bartosch (CN03SE)
S. K. Pursley (CN03SE)
M. H. Shipley (EC05P)
G. D. Robison (EC09E)

NCMPA-1
NCEMC
PMPA
SREC
Document Control File 801.01
RGC File
ELL-EC05O

Enclosure 1

Response to Request for Additional Information

Request for Additional Information 1

Identify the name and bounding quantity of each insulation material generated by a large-break loss-of-coolant accident (LBLOCA). Include the amount of these materials transported to the containment pool. State any assumptions used to provide this response.

Catawba Response:

General Note:

This RAI response describes the initial, unrefined quantities of insulation debris used in the baseline evaluation for sizing the Catawba ECCS sump strainer. Refined transported quantities of fibrous insulation debris used in design validation will be addressed as stated in the response to RAI 12 of Enclosure 1.

Table 1-1 contains a summary of the Catawba Nuclear Station bounding values for insulation debris generated and transported to the ECCS sump by a large break loss of coolant accident. The limiting case is the "B" loop hot leg break:

Table 1-1
Insulation Debris Values

Debris Type	Break Zone of Influence (ZOI)	Debris Quantity Generated	Debris Transport Fraction (DTF)	Quantity At Sump
Insulation				
Low Density Fiberglass (LDFG) (Nukon® and Thermal-Wrap®)				
Fines	17D	195.5 ft^3	100%	195.5 ft^3
Small Pieces (<6" on a Side)	17D	663.0 ft^3	70%	464.1 ft^3
Large Pieces (>6" on a Side)	17D	322.4 ft^3	10%	32.2 ft^3
Intact Blankets	17D	344.9 ft^3	0%	0 ft^3
Reflective Metal Insulation (RMI)				
Small Pieces (<4")	28.6D	55,171 ft^2	0%	0
Large Pieces (≥4")	28.6D	22,535 ft^2	0%	0

Note: Only insulation debris is addressed in this RAI response. The quantities of failed coatings that transport to the ECCS sump are addressed separately in Enclosure 2, Section 3(h). Latent debris quantities (fiber fines, dust/dirt fines, tags/labels) that transport to the ECCS sump are addressed in Enclosure 2, Section 3(d).

The following assumptions have been made regarding debris generation:

1. It was assumed that buckles, straps, and wires securing insulation would not transport, and therefore can be excluded from the debris source term. These

materials are metal based and would readily sink to the floor. Also, the volume of these materials is negligible compared to the insulation volume.

2. It was assumed that all jacketed insulation outside of the ZOI would not undergo any erosion by either break or spray flows, i.e., no insulation debris would be generated outside of the postulated ZOIs, in accordance with Section 3.4.3.2 of the SER for NEI 04-07.

3. Since RMI is not a significant contributor to head loss compared to a fibrous debris bed, an exact quantification of RMI for the break was not required. Large equipment (reactor coolant pumps and pressurizer) and large bore piping, e.g., RCS, Main Steam, Feedwater, Auxiliary Feedwater, were considered in the tabulation of RMI. Even if the foil area of the RMI is significantly changed, its contribution to the total sump screen head loss is negligible.

4. Thermal-Wrap® and Knauf® are LDFG insulation types similar to Nukon®. The material characteristics, as well as destruction pressure and associated ZOI, are assumed equal to those defined for Nukon® in SER Table 3.2. This assumption is supported by the destruction data in Appendix II of the SER.

The following assumptions have been made regarding <u>debris transport:</u>

5. It was assumed that Nukon® and Thermal-Wrap® are identical for transport purposes. This is a reasonable assumption since both products are low density fiberglass (LDFG) with similar material properties.

6. It was assumed that the small pieces of fiberglass (smaller than 6") can be treated as 1" lumps, and the large pieces of fiberglass can be treated as 6" pieces for transport purposes. This is a conservative assumption since smaller pieces of fiberglass transport more readily than larger pieces.

7. It was assumed that ¼"-4" pieces of RMI debris can be treated as ½" pieces and 4"-6" pieces can be treated as 2" pieces for transport purposes. This is a conservative assumption since smaller pieces of RMI transport more readily than larger pieces.

8. It was assumed that the RMI would not break down into smaller pieces following the initial generation. This is a reasonable assumption since RMI is a metallic insulation that would not be subject to erosion by the flow of water.

9. It was assumed that the settling velocity of fine debris (insulation, dirt/dust, and paint particulate) can be calculated using Stokes' law. This is a reasonable

assumption since the particulate is generally spherical and would settle slowly (within the applicability of Stokes' law).

10. Based on fibrous debris testing, it was assumed that the fiberglass debris would not float in the containment pool. Test data has shown that fiberglass insulation sinks more readily in hotter water. Therefore, given the initial high temperature of the containment pool at Catawba (190°F), this is a reasonable assumption.

11. It was conservatively assumed that all of the debris generated by the postulated RHR line break would be transported to the sump. (The RHR line break is not limiting even with this conservative assumption.)

12. It was conservatively assumed that all of the transportable miscellaneous debris (including tags, labels, etc.) as well as small debris trapped in the ice condenser would be transported to the emergency sump.

13. It was conservatively assumed that all latent debris is in lower containment, and would be uniformly distributed in the containment pool at the beginning of recirculation.

14. It was assumed that fine debris would be uniformly distributed in the pool at the beginning of recirculation.

15. With the exception of debris blown through the crane wall penetrations, it was assumed that small and large piece debris would be uniformly distributed inside the crane wall.

16. It was assumed that the recirculation transport fractions determined for the Loop B break can be applied to the other breaks inside the crane wall.

17. Water falling from the reactor coolant system was assumed to do so without encountering any structures before reaching the containment pool.

Request for Additional Information 2
Identify the amounts (i.e., surface area) of the following materials that are:

a. submerged in the containment pool following a loss-of-coolant accident (LOCA),

b. in the containment spray zone following a LOCA:

- **aluminum**
- **zinc (from galvanized steel and from inorganic zinc coatings)**
- **copper**
- **carbon steel not coated**
- **uncoated concrete**

Compare the amounts of these materials in the submerged and spray zones at your plant relative to the scaled amounts of these materials used in the Nuclear Regulatory Commission (NRC) nuclear industry jointly-sponsored Integrated Chemical Effects Tests (ICET) (e.g., 5x the amount of uncoated carbon steel assumed for the ICETs).

Catawba Response:
General note:
The published results of ICET Test #5 were used in developing the input parameters of the Integrated Prototype Test (IPT) described in the response to RAI #11 of Enclosure 1. ICET Test #5 is not used directly to assess the chemical effects on the Catawba strainer head loss. The Duke IPT is a separate, comprehensive chemical effects test that emulates a portion of the ICET Test #5 battery, using bounding and representative chemical and debris input parameters that vary as a function of the ECCS mission time (to simulate the effects of spray) and are more closely coupled to the predicted Catawba post-LOCA environment.

The following is an assessment of the amount of the materials identified by RAI #2 located in the submerged zone (i.e., in the containment sump pool) in the post-LOCA environment at Catawba:

- *Aluminum*
  A conservative (and bounding) estimate of the amount of aluminum expected to be submerged in the containment sump pool following a LOCA is 616 square feet.

- *Zinc (from galvanized steel and from inorganic zinc coatings)*
  In an ice condenser containment such as Catawba, the galvanized steel components (e.g., baskets and structural steel) located within the boundary of the ice condenser itself are outside both the submergence and the containment spray zones. The total remaining estimated zinc inventory, in the form of metallic coatings, zinc based coatings, and electrical components and equipment, is conservatively estimated at 428,600 square feet. An estimate of the amount of this remaining inventory expected to be submerged in the post-LOCA containment pool is not available.

- *Copper*
  The copper inventory inside containment is not specifically tracked at Catawba.

- *Uncoated carbon steel*
  The uncoated carbon steel surface area inside the Catawba containments is not specifically tracked.

- *Uncoated concrete*
  Uncoated concrete surface areas inside the containments at Catawba are not specifically tracked. In general, all concrete surfaces inside containment are coated, but there are some inaccessible areas that cannot be confirmed to have coatings (e.g., clearance between concrete expansion joints, the cavity between the reactor vessel and bio-shield wall). Since the majority of the ECCS sump is coated, only a minor fraction of uncoated concrete surface area would be submerged in the post-LOCA containment sump pool.

The following is an assessment of the amount of the materials identified by RAI #2 located in the spray zone (i.e., not submerged in the containment sump pool, but exposed to containment spray flow) in the post-LOCA environment at Catawba:

- *Aluminum*
  A bounding estimate of the amount of aluminum identified as in the spray zone following a LOCA is 140 square feet.

- *Zinc (from galvanized steel and from inorganic zinc coatings)*
  The zinc inventory inside containment has not been tracked to the point of being able to provide an accurate accounting of the amount of this material exposed to post-LOCA containment spray flow. Top-coated zinc primers (qualified coatings) are not considered a contributor to post-LOCA containment pool chemistry. Qualified coatings are only a containment pool particulate debris concern in the limiting LBLOCA coatings ZOI.

- *Copper*
  The copper inventory inside containment is not specifically tracked at Catawba.

- *Uncoated carbon steel*
  The uncoated carbon steel surface area inside the Catawba containments is not specifically tracked.

- *Uncoated concrete*
  Uncoated concrete surface areas inside the containments at Catawba are not specifically tracked. In general, all concrete surfaces inside containment are coated, however there are some inaccessible areas that cannot be confirmed to have coatings (e.g., clearance between concrete expansion joints, the cavity between the reactor vessel and bio-shield wall). While some fraction of this uncoated concrete will be above the ECCS sump and in the containment spray zone, the relative inaccessibility of this uncoated concrete surface area minimizes the effect of containment spray exposure.

A comparison of the expected amounts of these materials in the submerged containment pool zones relative to the scaled amounts of these materials used in ICET Test #5 (for ice condenser plants) is summarized in Table 2-1.

A comparison of the expected amounts of these materials exposed to containment spray (i.e., unsubmerged) does not yield additional Catawba/ICET Test #5 comparison information beyond that depicted in Table 2-1.

The expected Catawba post-LOCA containment sump pool chemistry (boron concentration, buffering agent concentration, and pH) is compared to the ICET Test #5 conditions in the response to RAI #6 of Enclosure 1.

Table 2-1
Catawba Values vs. ICET Test #5 Values

Parameter	CNS Values			Values used in ICET Test #5	
	Amount (total submerged + exposed to spray)	Amount Submerged (from bounding estimates)	Ratio*	Test Ratio	Submerged Material
Aluminum	756 ft^2	616 ft^2 (41%)	0.03 ft^2/ft^3	3.5 ft^2/ft^3	5%
Zinc in Galvanized Steel	Not Available (see Note 1)	Not Available (see Note 1)	-	8.0 ft^2/ft^3	5%
Inorganic Zinc Primer Coatings (non-top coated)	Not Available (see Note 1)	Not Available (see Note 1)	-	4.6 ft^2/ft^3	4%
Copper (including Cu-Ni alloys)	Not Available (see Note 2)	Not Available (see Note 2)	-	6.0 ft^2/ft^3	25%
Carbon Steel	Not Available (see Note 3)	Not Available (see Note 3)	-	0.15 ft^2/ft^3	34%
Concrete (surface, uncoated)	Not Available (see Note 4)	Not Available (see Note 4)	-	0.045 ft^2/ft^3	34%

* Catawba minimum ECCS sump pool volume used (139,054 gallons or 18,590 cubic feet) to maximize the ratio for ICET Test #5 comparison.

Note 1:
An estimate of the zinc inventory inside containment is available at Catawba. However, an accurate accounting of the amount of this material exposed to post-LOCA containment spray flow is not available. Values used in the ICET Test #5 environment are conservative, since this material is not a significant contributor to sump pool chemistry or particulate debris loading.[11] Top-coated zinc primers (qualified coatings) are not considered a contributor to post-LOCA containment pool chemistry. Qualified coatings are only a containment pool particulate debris concern in the limiting LBLOCA coatings ZOI.[12]

Note 2:
As demonstrated during ICET Test #5 and as identified in WCAP-16530-NP, copper and Cu-Ni alloys are resistant to corrosion under expected post-accident conditions and appear in only trace amounts in the predicted sump pool chemistry.

Note 3:
Carbon steel is a metal alloy primarily composed of iron. As demonstrated during ICET Test #5, iron appears in only trace amounts in the predicted sump pool chemistry. Further, it was identified in WCAP-16530-NP that the release rates for iron were relatively small and subsequently ignored in chemical effects precipitation modeling.

Note 4:
Uncoated concrete occurs in limited amounts in containment. As demonstrated during ICET Test #5, concrete is primarily a particulate debris concern in the Catawba post-LOCA containment sump pool. Further, sensitivity tests performed under WCAP-16530-NP determined that the precipitation of materials from concrete dissolution was negligible even with high exposed surface areas.

Based on the above assessments of the amount of the materials identified in RAI #2, the predicted post-LOCA conditions at Catawba compare reasonably and conservatively to the parameters and conditions tested in ICET Test #5. As noted earlier, the results from ICET Test #5 were used to help develop input parameters for Duke's Integrated Prototype Test for chemical effects.

Request for Additional Information 3
Identify the amount (surface area) and material (e.g., aluminum) for any scaffolding stored in containment. Indicate the amount, if any, that would be submerged in the containment pool following a LOCA. Clarify if scaffolding material was included in the response to Question 2.

Catawba Response:
Permanent scaffold frames are installed inside containment to support lead shielding. These frames are composed of galvanized steel. There is no aluminum associated with these permanent scaffold frames.

When temporary scaffolding is installed in containment during power operations to support specific maintenance activities, these installations are procedurally controlled. The quantity of aluminum is evaluated as part of the overall engineering evaluation of material remaining in containment at power to ensure that engineering limits are not exceeded. Margin for temporary scaffolding installation is incorporated into the response to RAI #2 of Enclosure 1.

Zinc (associated with galvanized coatings on certain scaffolding components) is primarily a particulate concern in the post-LOCA ECCS sump pool and is an insignificant contributor to post-LOCA sump chemistry. There is substantial margin in the inventory limit for zinc inside containment; therefore, the zinc coatings associated with temporary scaffolding is not specifically tracked.

Request for Additional Information 4

Provide the type and amount of any metallic paints or non-stainless steel insulation jacketing (not included in the response to Question 2) that would be either submerged or subjected to containment spray.

Catawba Response:

All insulation jacketing in containment is stainless steel. The only known metallic paint, other than zinc-based primers, is associated with touch-up coatings on galvanized steel items. This zinc-based coating has had very limited use and has been treated as unqualified coating particulate in the post-LOCA containment sump pool. Galvanized steel items are accounted for in the response to RAI #2 of Enclosure 1.

Request for Additional Information 5

Provide the expected containment pool pH during the emergency core cooling system (ECCS) recirculation mission time following a LOCA at the beginning of the fuel cycle and at the end of the fuel cycle. Identify any key assumptions.

Catawba Response:

In order to establish the containment sump pool pH at a particular time after the initiation of a postulated LBLOCA event, the addition of water to the sump from the various Emergency Core Cooling System (ECCS) sources and the Ice Condenser must be established. The guidance from NUREG/CR-5950 was followed. Major inputs and assumptions used in the Catawba Nuclear Station ECCS sump pH calculation are provided in Table 5-1 below. LBLOCA is considered because of the large potential for debris generation.

An analysis was performed to document how the ECCS sump pH was affected by both Beginning-of-Life (BOL) and End-of-Life (EOL) boron concentrations in the reactor coolant inventory. The EOL scenario, consisting of much lower concentrations of boron in the reactor coolant inventory, yields a higher sump pH profile than the same analysis for the BOL assessment. Figure 5-1 shows the time-dependent sump pH profile for both BOL and EOL cases, normalized to 25 °C.

The Catawba ECCS sump pH analysis shows that by 2 hours after LBLOCA initiation all of the water from the RCS, Refueling Water Storage Tank (FWST), Cold Leg Accumulators (CLAs), and the ice melt from the Ice Condenser will be in the sump. Continuing nitric acid and hydrochloric acid production due to irradiation of the water/air mixture and of the electrical cable insulation/jacket material inside containment will be a long term contributor to the pH value of the sump. In order to address the impact of this effect, a sensitivity analysis was performed and showed that when the time range is expanded beyond 2 hours, there is an insignificant change in the ECCS sump pH.

Figure 5-1
Catawba LBLOCA Expected Beginning and End of Life Sump pH Response

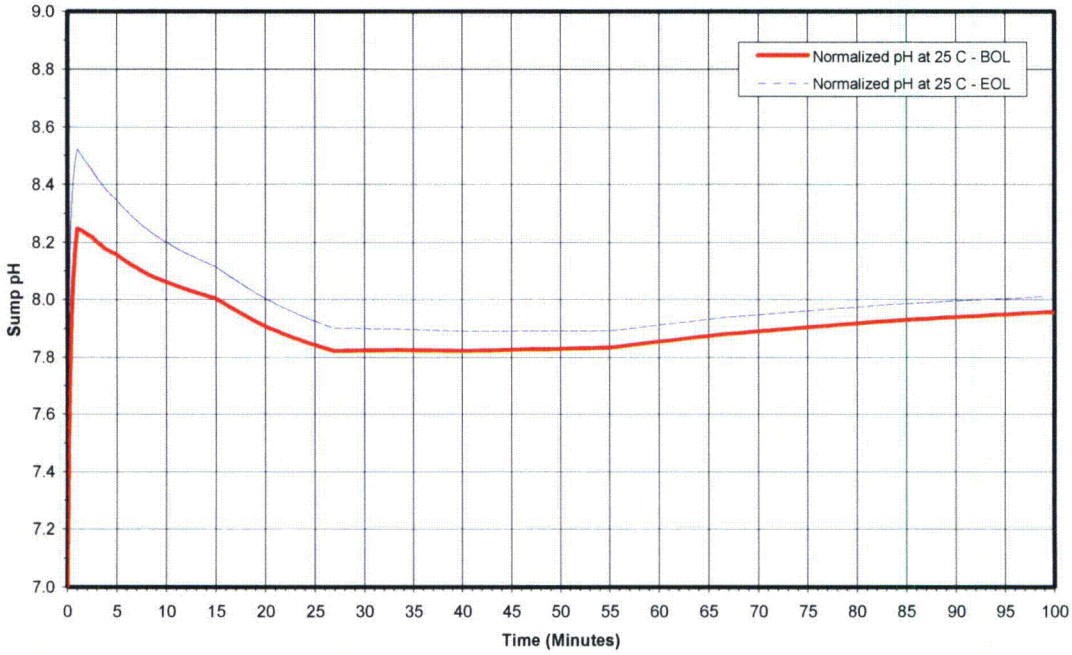

Key Assumptions:

Table 5-1
Key Assumptions For the Calculation of Post LOCA Containment Sump pH at Catawba Nuclear Station

Input Description	Value
Reactor Coolant Inventory	11,114.4 ft^3
Boron Content in Reactor Coolant (BOL)	1212.5 ppm
Boron Content in Reactor Coolant (EOL)	7.9 ppm
FWST Inventory	319,637 gal
Boron Content in FWST	2862.5 ppm
Cold Leg Accumulators Volume	4200 ft^3
Boron Content in Cold Leg Accumulators	2762.5 ppm
Ice Condenser Mass	2,130,000 lbm
Ice Condenser Boron Content	2065 ppm

Request for Additional Information 6

For the ICET environment that is the most similar to your plant conditions, compare the expected containment pool conditions to the ICET conditions for the following items: boron concentration, buffering agent concentration, and pH. Identify any other significant differences between the ICET environment and the expected plant-specific environment.

Catawba Response:

Post-LOCA containment sump pool chemistry is a function of Reactor Coolant System (RCS)/Emergency Core Cooling System (ECCS)/Ice Condenser inventory chemistry, and also a function of the chemical effects due to materials submerged in the pool (and sprayed outside the pool) during the ECCS mission time. The response to RAI #2 of Enclosure 1 addresses materials in the containment pool and the response to RAI #5 of Enclosure 1 specifically addresses the pH of the containment pool. The multi-part pool chemistry comparison requested in this RAI invokes the previous pH response, so that information is repeated here (in a different form) for consistency.

Catawba is an ice condenser plant using sodium tetraborate as the buffering agent. It has no calcium silicate insulation material. Therefore, the ICET environment that is most similar to Catawba is Test #5. A comparison of the expected Catawba containment pool conditions and ICET #5 conditions is provided in Table 6-1:

Table 6-1
Catawba Containment Pool Conditions vs. ICET Test #5 Conditions

	Catawba BOL1	Catawba EOL1	ICET Test 5
Boron Concentration (ppm B)	1758 to 2522 >2000 after 1 minute 2506 after 99 minutes	982 to 2405 >1536 after 1 minute 2399 after 97 minutes	2400
pH (25C)	6.42 to 8.25 ≤8 after 15.3 minutes 7.90-7.96 after 74 minutes	6.86 to 8.52 ≤7.99 after 21 minutes 7.95-8.01 after 72 minutes	8 to 8.5
Na concentration from sodium tetraborate (ppm Na)	845 after 100 minutes ≥ 473 after 24 seconds	845 after 100 minutes ≥ 473 after 24 seconds	1200 to 1400

Based on the comparison above, there are no major differences between the ICET #5 and Catawba environments.

Request for Additional Information 7

For a LBLOCA, provide the time until ECCS external recirculation initiation and the associated pool temperature and pool volume. Provide estimated pool temperature and pool volume 24 hours after a LBLOCA. Identify the assumptions used for these estimates.

Catawba Response:

For LBLOCA, the time until ECCS external recirculation initiation and the associated pool temperatures and pool volumes are shown in Table 7-1.

Table 7-1
ECCS Parameters After LBLOCA

Analysis Assumptions	Time	Sump Temperature (°F)	Sump Volume (ft^3)
Minimum Safeguards (Note 1)	1688 seconds to recirc. initiation	182.7	39,154
	24 hours	160.7	63,389
Maximum Safeguards (Note 2)	806 seconds to recirc. initiation	189.3	38,419
	24 hours	128.2	61,695

Note 1: Minimum Safeguards conditions are characterized by minimum flow rates from one train of ECCS pumps, including one containment spray pump.

Note 2: Maximum Safeguards conditions are characterized by maximum flow rates from two trains of ECCS pumps, including two containment spray pumps.

Note 3: Based on the results of a sensitivity study designed to maximize the sump pool temperature, it is possible for the sump pool temperature at cold leg recirculation initiation to be an additional 1°F higher.

Request for Additional Information 8
Discuss your overall strategy to evaluate potential chemical effects including demonstrating that, with chemical effects considered, there is sufficient net positive suction head (NPSH) margin available during the ECCS mission time. Provide an estimated date with milestones for the completion of all chemical effects evaluations.

Catawba Response:
Duke's overall strategy to evaluate chemical effects employs an Integrated Prototype Test (IPT) designed to simulate the predicted comprehensive challenge to the McGuire and Catawba ECCS Strainers in the post-LOCA containment pool. The IPT combines the physical and chemical characteristics expected in the post-accident environment and then challenges a prototype strainer module in this environment for the full 30-day ECCS mission time. Overall characteristics of the IPT are identified below:

- Full-scale strainer top-hat module
- Representative debris load (fiber)
- Bounding particulate load (coatings, dust/dirt)
- Bounding sump pool chemistry (pH, boron concentration)
- Representative sump temperature cool-down profile
- Bounding approach velocity
- Bounding dissolved aluminum concentration as a function of ECCS mission time

The input parameters for the IPT are representative of the McGuire and Catawba post-LOCA sump conditions. Further details regarding these parameters can be found in the response to RAI #11 in Enclosure 1.

Available ECCS NPSH margin/head loss calculations have been documented for the clean strainer condition, the baseline debris load condition, and the refined debris load condition in accordance with the approved methodology identified in NEI 04-07 and the NRC SER. The refined debris load head loss analysis does not yet incorporate chemical effects. Upon completion of the IPT documentation, a refined debris load head loss calculation will incorporate any added consequence of tested chemical effects and confirm the available ECCS NPSH margin. Duke expects to have this documentation and the Catawba Units 1 and 2 head loss calculations completed by April 30, 2008.

Request for Additional Information 9

Identify, if applicable, any plans to remove certain materials from the containment building and/or to make a change from the existing chemicals that buffer containment pool pH following a LOCA.

Catawba Response:

Catawba is an ice condenser plant, using sodium tetraborate in the ice condenser as a pH buffer. There are no plans to make any changes to the existing chemicals that buffer containment pool pH following a LOCA.

Request for Additional Information 10

If bench-top testing is being used to inform plant specific head loss testing, indicate how the bench-top test parameters (e.g., buffering agent concentrations, pH, materials, etc.) compare to your plant conditions. Describe your plans for addressing uncertainties related to head loss from chemical effects including, but not limited to, use of chemical surrogates, scaling of sample size and test durations. Discuss how it will be determined that allowances made for chemical effects are conservative.

Catawba Response:

General Note:

In order to address specific ECCS head loss/NPSH issues, Duke designed a comprehensive Integrated Prototype Test (IPT) to assess chemical effects on the postulated post-LOCA debris bed at McGuire and Catawba. The design and set-up of the IPT is discussed in detail in the response to RAI #11 of Enclosure 1.

Bench-top tests (including laboratory tests and a 30-day Vertical Loop Test) were also performed as part of an aluminum release rate testing program, in order to provide insights for the Integrated Prototype Test parameters. The bench-top testing program that led to the development of the IPT is discussed here.

In February 2006, the Pressurized Water Reactor Owners Group (PWROG) issued WCAP-16530-NP, Revision 0, "Evaluation of Post-Accident Chemical Effects in Containment Sump Fluids in Support of GSI-191." This WCAP provided a chemical model that estimated the type and amounts of chemical precipitates that may be formed in a post-LOCA environment using plant specific containment materials inventories and environmental conditions (sump and atmosphere temperatures). Throughout 2006, Duke used this chemical model to ascertain the bounding amounts of any precipitates that may form in a thirty day period (the designed ECCS mission time).

Laboratory Aluminum Release Rate Testing

Duke performed extensive aluminum corrosion and aluminum release rate testing internally to expand the PWROG test database. This testing has resulted in a better understanding of the materials' performance in the expected post-LOCA containment sump pool environments at the Duke plants (McGuire, Catawba, and Oconee Nuclear Stations).

WCAP-16530-NP, Revision 0 provided aluminum corrosion and release rate data over short time spans (1.5 hours) and a wide pH range. The additional corrosion and release rate tests performed by Duke Energy provided data over longer time spans and in environments more consistent with the post-LOCA sump pool chemistry at McGuire and Catawba.

For McGuire and Catawba, the aluminum release rate algorithm located in the WCAP-16530-NP spreadsheet was modified based on this testing. Compared to the WCAP algorithm, the Duke algorithm estimated lower aluminum releases at low pH and slightly higher aluminum releases at high pH. For the predicted post-LOCA environment for McGuire and Catawba, the Duke algorithm results in a conservatively increased mass of aluminum released when compared to the WCAP results.

Vertical Loop Testing

To better understand the sensitivity of the various input parameters used in the PWROG chemical model on the amount of possible chemical precipitates predicted and to gain insight into the behavior of various aluminum chemical species and their effect on pressure drop across a fiberglass insulation bed deposited on a representative strainer, Duke Energy constructed a Vertical Test Loop assembly and conducted a series of tests. The loop was completed in late 2006 and a total of fourteen tests with chemical additions were performed.

The Vertical Test Loop assembly which addressed both Catawba and McGuire was constructed using a flat plate strainer, and representative amounts of pre-treated fiber insulation were used to form a bed on the strainer. Tests were performed using predicted site specific chemistry and with additions of either sodium aluminum silicate particulate or soluble aluminum. Chemical loadings were based on model predictions using the PWROG chemical model provided by WCAP-16530-NP, modified with the Duke aluminum release rate algorithm as discussed previously, to estimate the amount of chemicals released and possible precipitates that might form subsequent to a LBLOCA. Use of this aluminum release rate algorithm was conservative, because it results in higher releases at the McGuire/Catawba estimated post-LOCA ECCS containment sump pool pH than those resulting from the WCAP algorithm with the same inputs. Flow velocities were conservatively based on Maximum Safeguards conditions. The Catawba maximum volume, Minimum Safeguards temperature profile scenario resulted in the highest aluminum release and was used as the bounding case for both McGuire and Catawba. As a result of the test loop volume to strainer area ratio being less than the plant ratio, the test loop concentrations of both silica and aluminum were considerably higher than actual concentrations predicted in the plant. This provided additional conservatism to the Vertical Test Loop results.

Request for Additional Information 11

Provide a detailed description of any testing that has been or will be performed as part of a plant-specific chemical effects assessment. Identify the vendor, if applicable, that will be performing the testing. Identify the environment (e.g., borated water at pH 9, deionized water, tap water) and test temperature for any plant-specific head loss or transport tests, Discuss how any differences between these test environments and your plant containment pool conditions could affect the behavior of chemical surrogates. Discuss the criteria that will be used to demonstrate that chemical surrogates produced for testing (e.g., head loss, flume) behave in a similar manner physically and chemically as in the ICET environment and plant containment pool environment.

Catawba Response:

General Note:

In order to address specific ECCS head loss/NPSH issues, Duke designed a comprehensive Integrated Prototype Test (IPT) to assess chemical effects on the postulated post-LOCA debris bed at McGuire and Catawba. Bench-top tests (including laboratory tests and a 30-day Vertical Loop Test) were also performed as part of an aluminum release rate testing program, in order to provide insights for the Integrated Prototype Test parameters. The bench-top testing program that led to the development of the IPT and to the refinement of its input parameters is discussed in the response to RAI #10 of Enclosure 1. The design and set-up of the IPT are discussed in detail here. IPT results will be addressed as stated in the response to RAI #12 of Enclosure 1.

Duke's strategy to evaluate chemical effects on the modified ECCS sump strainer head loss employs an Integrated Prototype Test (IPT) designed to simulate the predicted comprehensive challenge to the McGuire and Catawba ECCS Strainer modules (top-hats) in the post-LOCA containment pool. The IPT, performed by Wyle Laboratories at their Huntsville, Alabama facility in fall 2007, combined the physical and chemical characteristics expected in the post-accident environment just prior to ECCS sump pool recirculation, and then challenged a prototype strainer top-hat in the recirculating pool for the full 30-day ECCS mission time while representative chemical effects were introduced.

Integrated Prototype Test Setup

The test was conducted in a tank with a prototypical top-hat module mounted horizontally. To closely match the interaction of the top-hat with the surrounding strainer assemblies, vertical walls were placed in close proximity to the top-hat perforated plate on both sides. The module was also positioned so that the bottom edge of the lower base plate is in close proximity to the floor. The testing mimicked

post-LOCA containment pool conditions, including a representative flow rate of borated water buffered with sodium tetraborate. A decreasing temperature profile was also followed. Debris sources predicted to arrive at the strainer, including NUKON® fiberglass, a failed coatings surrogate, and a dirt/dust surrogate, were added to the tank and allowed to accumulate on the top-hat module. In addition, an amount of NUKON® fiberglass insulation predicted to not physically transport to the top-hat was submerged in the system fluid so it is available to react chemically within the pool. To represent the sprayed and submerged condition of containment materials, a solution of aluminum nitrate is metered into the system over time according to a predicted concentration profile. The test continued for 30 days, while debris bed head loss, flow rate, temperature, and pool pH were monitored and recorded.

A 36-inch long prototype top-hat module was utilized in the IPT test loop. This length is representative of the population of top-hat modules available on the McGuire Unit 1 and 2 modified strainers (24 inch, 30 inch, 36 inch and 45 inch) and dimensionally similar to the population of top-hat modules available on the Catawba Unit 1 and 2 modified strainers. All other top-hat parameters (e.g., base plate, mesh size, diameter) on the test prototype module are identical to those installed in the McGuire and Catawba ECCS sumps, including the bypass eliminator feature.

Figure 11-1 below shows the physical IPT rig setup.

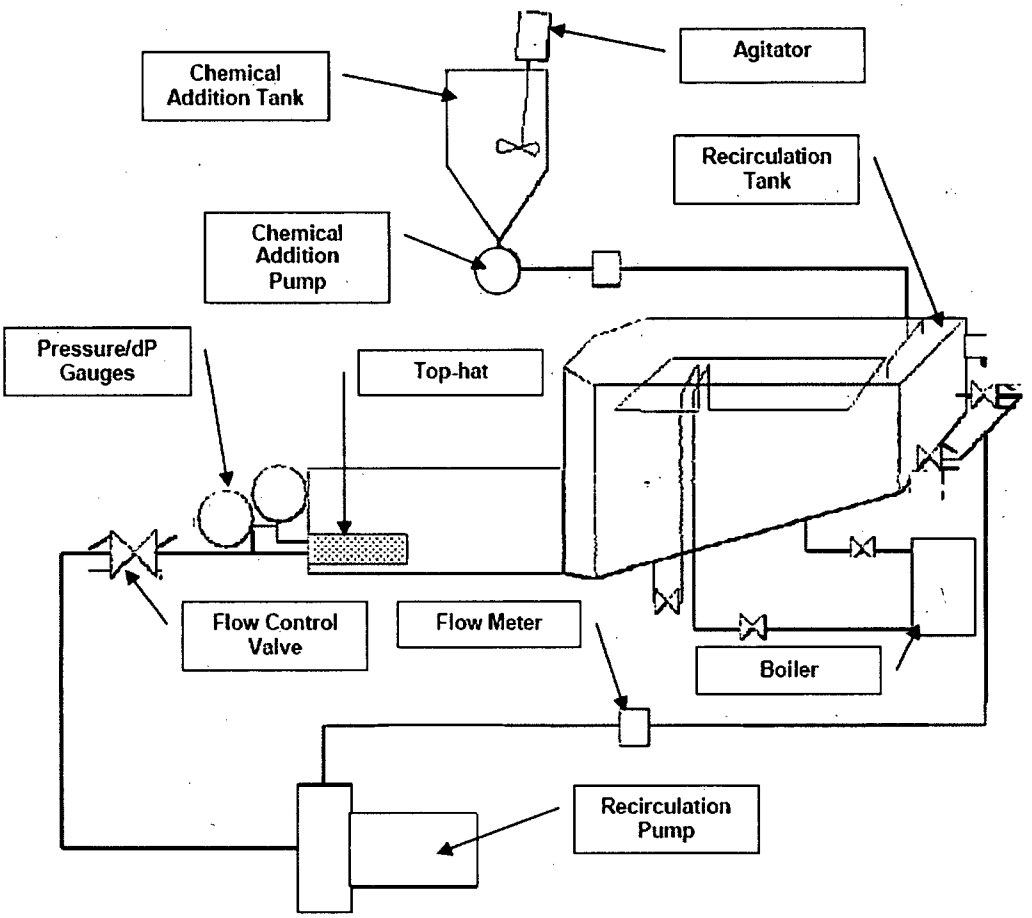

Figure 11-1

Integrated Prototype Test Setup

Test Environment

Representative Sump Pool Properties (boron, pH, buffering agent)

- Boron and pH
  The system boron concentration was initially 1730 ppm (+/- 300 ppm), added as boric acid to demineralized water. The boron concentration was approximately 2400 ppm (+/- 500 ppm) after pH adjustment with sodium tetraborate.

- Buffering Agent

  The pH was adjusted with sodium tetraborate to 7.9 (as measured at 25°C). The pH remained between 7.8 and 8.0 during the test period. Sodium hydroxide and nitric acid were used to maintain pH within the specification.

Representative sump pool temperature profile

In general, the Catawba post-LOCA minimum safeguards scenario has the highest temperatures, and the McGuire post-LOCA maximum safeguards scenario has the lowest temperatures. The highest temperature profile was simulated initially, and the lowest temperature profile simulated during the latter part of the test. This conservative approach ensures a bounding sump pool condition for potential chemical precipitates.

Figure 11-2 shows the expected temperature profiles for various post-LOCA scenarios at McGuire and Catawba during the ECCS mission time, and the representative IPT profile.

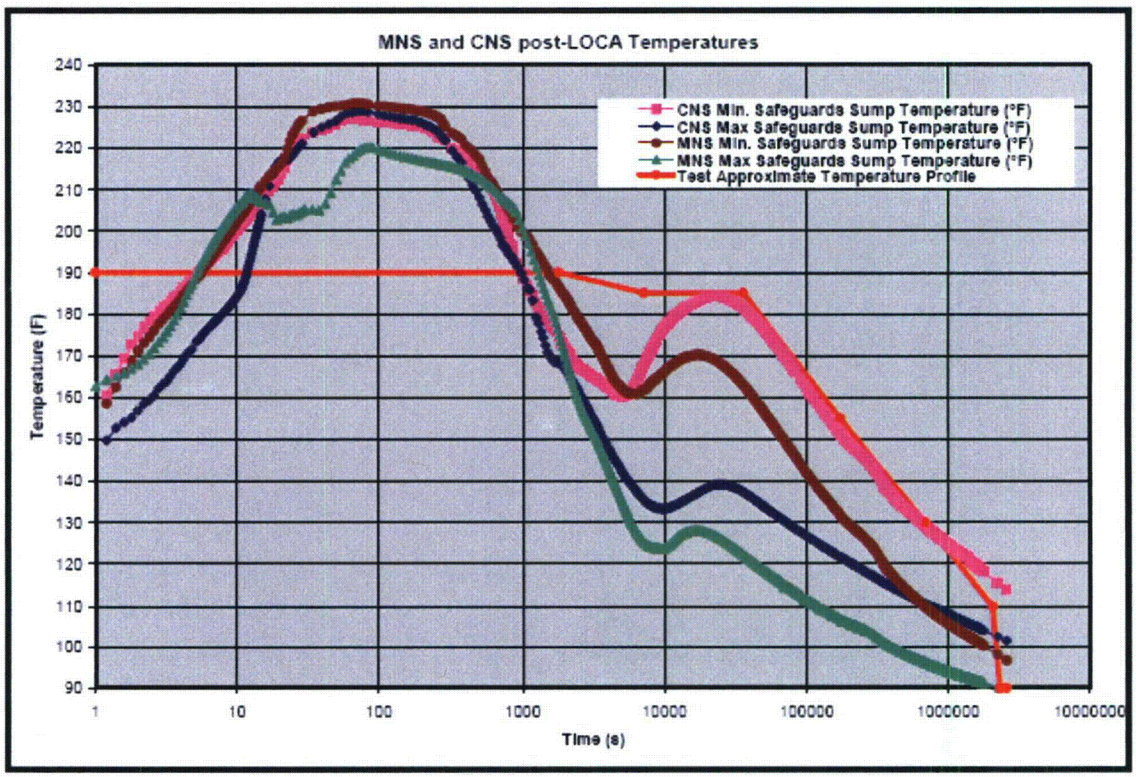

Figure 11-2

McGuire/Catawba Sump Pool Temperature Profiles

For the test, targeted pool temperature conditions (within +/- 5°F, with linear transitions),were as follows:

- The test was to start at 190°F and remain constant for 30 minutes.
- The system was to decline to 185°F at 2 hours and remain constant until 10 hours.
- The system was to decline to 155°F at 48 hours.
- The system was to decline to 130°F at 192 hours.
- The system was to decline to 110°F at 576 hours.
- The system was to decline gradually to 90°F at 648 hours and remain constant for the remainder of the test.

Representative approach velocity

An approach velocity of 0.0275 ft/sec was used, equating to a test flow rate through the top-hat module of approximately 114 gpm (+/- 5 gpm); this was above the expected maximum safeguards average approach velocity to the McGuire and Catawba ECCS sump strainers.

Conventional Debris

General Note:
The conventional fiber debris quantities used in the design of the IPT are refined quantities. Details regarding the refined quantities can be found in Section 3(b) of Enclosure 2.

Representative debris loading (fiber)

The fiber debris load designed to challenge the top-hat in the IPT test loop reflected the postulated loading generated from a large break LOCA located on the Reactor Coolant System B Loop Hot Leg at McGuire. This bounds the postulated loading generated from the limiting large break LOCA located on the Reactor Coolant System B Loop Crossover Leg at Catawba. Nukon® fiber insulation is sufficiently similar to Thermal-Wrap® fiber insulation and so was used to represent both types in the IPT. The fiber debris load thickness for the IPT was conservatively approximated at 1.75 inches. This value is representative of the expected post-LOCA conditions are McGuire and bounding for Catawba. Also, to be representative of the expected post-LOCA condition at each plant, the insulation was in a shredded form and baked to remove any organic binders.

In addition to the fiber debris load expected at the strainer top-hat, there was an additional amount of fibrous debris expected to transport to the containment sump pool and submerge, but not make it to the strainer modules. This additional fibrous debris was therefore available to react with the containment sump pool fluid but not

collect on the strainer. The potential chemical interaction with this material was accommodated in the IPT via the immersion of more Nukon® fiber to the test pool in a proportioned amount appropriate to the refined debris analysis.

Representative particulate loading (dust, dirt, failed coatings)

The surrogate material for latent dirt and dust is a material blend of silica sand representative of PWR latent dirt/dust particles. The size distribution of the sand was prepared consistent with the latent dirt/dust distribution provided in the NRC SER of NEI 04-07.

The failed coatings debris surrogate material was selected based on chemical reactivity and a comparison of microscopic densities. Epoxy and alkyd coatings densities at plants range from 94 lb/ft^3 to 98 lb/ft^3 per NEI 04-07 guidance. The surrogate used for epoxy and alkyd coatings was silica flour, which has a material specific gravity of 2.65 (microscopic density of 165.4 lb/ft^3).

The critical parameter for selecting the surrogate material is the volume of the material in the debris mix. The particulate material occupies a certain volume in the fibrous debris space that results in increasing resistance to flow, and therefore higher head loss. The surrogate material volume was adjusted to match the volume of the failed coatings particulate when it is less dense than the surrogate. The particle size for all failed coatings (epoxy, alkyd, and inorganic zinc) is assumed to be 10 microns per NEI 04-07 guidance. The surrogate materials were a spherical particulate, where 99% is less than 45 microns in diameter and 69% is less than 10 microns in diameter.

Chemical debris addition (calcium, silica)/Injection of dissolved aluminum

Chemical debris in the post-LOCA environment for McGuire and Catawba will largely include dissolved aluminum and silica. While no calcium precipitates are predicted to form in the containment sump pool, calcium chloride is added to the IPT pool to achieve a representative calcium concentration that mimics expected containment pool conditions.

- Calcium
  The IPT calcium concentrations simulate the highest estimated plant releases. Other particulate additions (fiberglass, surrogate debris materials, etc.) were taken into account to obtain a final solution calcium concentration of approximately 7-10 ppm.

- Silicon
  The scaled volume of non-transported NUKON® was submerged in the test pool fluid while preventing it from reaching the top-hat module. Dissolution of the submerged NUKON® by the pool chemistry provides the majority of dissolved silicon as predicted by the WCAP methodology. Due to temperature

limitations of the tank, the test was conducted at a lower temperature for the first hour. The silicon predicted by the WCAP methodology to be released in this period was added as sodium silicate. The dissolved aluminum and silicon may react with sodium from the pool buffering agent to form sodium aluminum silicate, a potential precipitate. The final total silicon concentration from all sources in the IPT pool was approximately 30 ppm to bound the highest predicted concentration in the post-LOCA containment sump pool.

- Dissolved Aluminum
  An aqueous solution of aluminum nitrate is metered into the system based on the aluminum release profile predicted by the WCAP-16530-NP model, assuming minimum safeguards and the McGuire (MNS) and Catawba (CNS) aluminum release rate algorithm determined from the Duke bench-top testing program. To the extent reasonable, a scaled Catawba minimum safeguards release rate for the IPT was simulated, since it is bounding for both plants. In addition, to demonstrate stability, the IPT includes a run period with no aluminum injection at the end of the test.

  Figure 11-3 shows the expected aluminum release rates at McGuire and Catawba for various post-accident scenarios during the ECCS mission time.

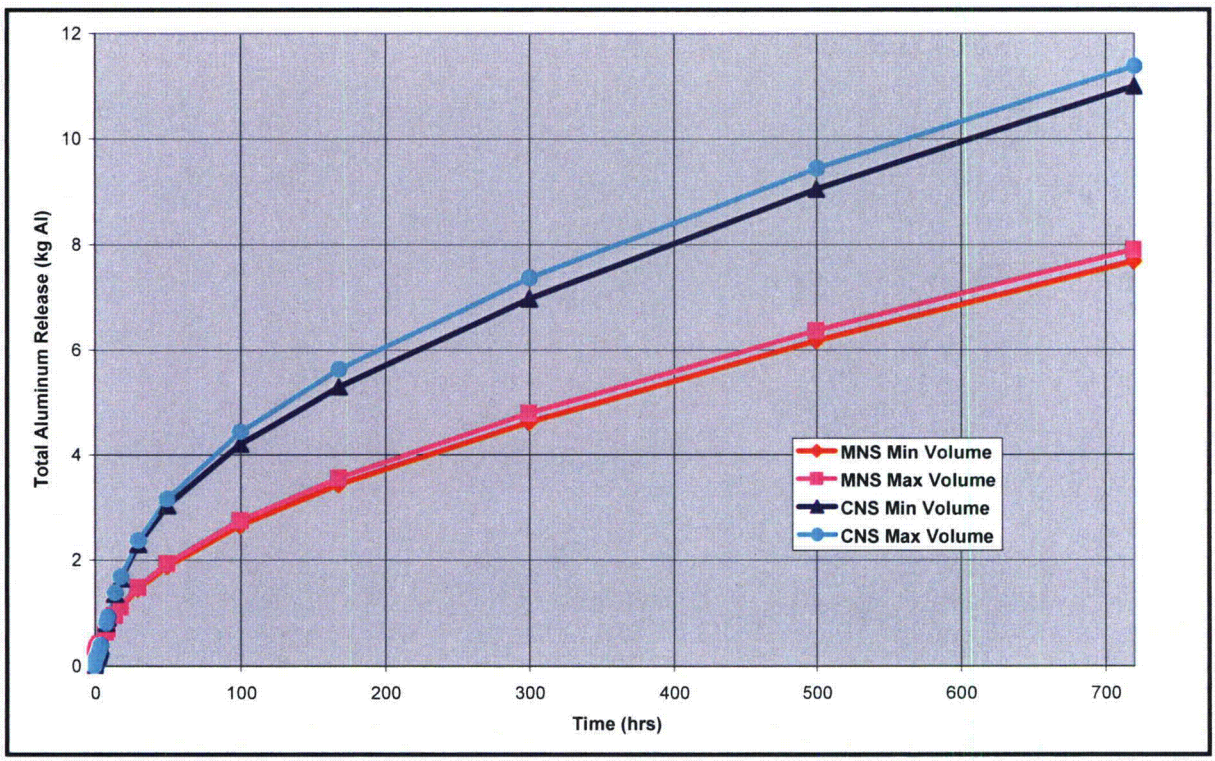

Figure 11-3

McGuire/Catawba Post-LOCA Aluminum Release Rates

For the IPT, the target aluminum injection profile was to follow the schedule shown in Table 11-1 below. The target quantities were to be achieved by slowly injecting the solution to minimize the local concentration at the injection location.

Table 11-1
Aluminum Injection Schedule

Start of Interval (hrs)	End of Interval (hrs)	Cumulative Volume of Aluminum Nitrate as 0.167% $Al(NO3)3 \cdot 9H2O$ Solution (gal)	Rate of Addition (gph)
0	8	10.1	1.27
8	18	18.4	0.83
18	24	21.7	0.55
24	48	31.7	0.42
48	96	43.8	0.26
96	168	56.1	0.18
168	288	71.2	0.13
288	504	92.8	0.10
504	672	98.1	0.04

For reference, Table 11-2 shows the final estimated releases and concentrations for the McGuire and Catawba post-LOCA ECCS sump pool assuming minimum safeguards temperatures, the Duke aluminum release rate algorithm, estimated aluminum surface areas and wetted fiberglass volume estimates.

Table 11-2
McGuire and Catawba Final Estimated Releases and Concentrations

	CNS max. vol.	CNS min. vol.	MNS max. vol.	MNS min. vol.
Ca Release (kg)	14.72	14.72	14.72	14.72
Si Release (kg)	80.51	52.44	52.21	34.25
Al Release (kg)	11.38	10.99	7.89	7.68
Ca Concentration (ppm)	4.5	8.3	4.5	8.2
Si Concentration (ppm)	24.4	29.4	15.8	19.2
Al Concentration (ppm)	3.4	**6.2**	2.4	4.3
Al/Gross Screen area (g Al/ft^2)	**4.74**	4.58	4.64	4.52

Assumptions for this table:
Minimum volume = 1784857.2 kg water
Maximum volume = 3300017.2 kg water
CNS Final Gross Screen Area = 2400 ft^2
CNS Final Net Screen Area = 1772 ft^2
MNS Final Gross Screen Area = 1700 ft^2
MNS Final Net Screen Area = 1317 ft^2
CNS reduced wetted fiberglass estimate = 625 ft^3
MNS reduced wetted fiberglass estimate = 625 ft^3
CNS final submerged aluminum = 563.2 ft^2
CNS final sprayed aluminum = 140.1 ft^2
MNS final submerged aluminum = 530 ft^2
MNS final sprayed aluminum = 736 ft^2

Request for Additional Information 12

For your plant-specific environment, provide the maximum projected head loss resulting from chemical effects (a) within the first day following a LOCA, and (b) during the entire ECCS recirculation mission time. If the response to this question will be based on testing that is either planned or in progress, provide an estimated date for providing this information to the NRC.

Catawba Response:

The response to RAI #12 will be based on the results of the Integrated Prototype Test (IPT). Maximum projected head loss, limiting NPSH margins and all supporting information regarding refinements to the initial evaluations will be provided by April 30, 2008 as described in the December 28, 2007 extension request approval.

Request for Additional Information 13

Results from the ICET #1 environment and the ICET #5 environment showed chemical products appeared to form as the test solution cooled from the constant 140°F test temperature. Discuss how these results are being considered in your evaluation of chemical effects and downstream effects.

Catawba Response:

As described in the response to RAI #10 of Enclosure 1, aluminum solubility conditions were evaluated by Duke Energy via bench-top testing. As part of that evaluation, the final temperature during the 30-day Vertical Loop Test was less than the lowest predicted Catawba ECCS post-LOCA containment pool temperature at 30 days.

As described in the response to RAI #11 of Enclosure 1, these Vertical Loop Test evaluations were incorporated into the test plan for the Integrated Prototype Test (IPT) for chemical effects. The test plan simulates the full range of expected post-accident ECCS sump temperatures at Catawba. As in the Vertical Loop Test, the IPT final temperature is less than the lowest predicted ECCS sump temperature for Catawba at 30 days. To achieve this, the temperature of the IPT is reduced to 90F during the latter part of the test. This test evaluates aluminum solubility, using specific chemistry and environmental parameters for Catawba Nuclear Station. The IPT results will be used to assess the total predicted post-LOCA head loss through the modified Catawba ECCS sump strainers, including chemical effects.

Downstream chemical effects are addressed in Section 3(o) of Enclosure 2.

Request for Additional Information 25

Describe how your coatings assessment was used to identify degraded qualified/acceptable coatings and determine the amount of debris that will result from these coatings. This should include how the assessment technique(s) demonstrates that qualified/acceptable coatings remain in compliance with plant licensing requirements for design-basis accident (DBA) performance. If current examination techniques cannot demonstrate the coatings' ability to meet plant licensing requirements for DBA performance, licensees should describe an augmented testing and inspection program that provides assurance that the qualified/acceptable coatings continue to meet DBA performance requirements. Alternately, assume all containment coatings fail and describe the potential for this debris to transport to the sump.

Catawba Response:

The comprehensive Duke Energy Corporation Containment Coatings Assessment Program in effect at Catawba Nuclear Station is used to identify degraded qualified/acceptable coatings and determine the amount of debris that will result from these coatings. This program also ensures that qualified/acceptable coatings remain in compliance with plant licensing requirements for design-basis accident (DBA) performance. If, after identification, degraded qualified/acceptable coatings will be left in place during plant operation, the degraded qualified/acceptable coatings are assumed to fail and to be available for transport to the ECCS sump.

Insights on the Containment Coatings Assessment Program

As originally discussed in Duke Energy Corporation's Catawba Nuclear Station response dated November 11, 1998 to Nuclear Regulatory Commission (NRC) Generic Letter 98-04, "Potential for Degradation of the Emergency Core Cooling System and the Containment Spray System After a Loss-of-Coolant Accident Because of Construction and Protective Coating Deficiencies and Foreign Material in Containment", a comprehensive program is in place at Catawba Nuclear Station for assessing and documenting the condition of qualified/acceptable coatings in primary containment. This program generates data which is used to schedule qualified/acceptable coating maintenance to ensure that qualified/acceptable primary containment coatings will not fail (detach) during normal and accident conditions and thus not contribute to the Emergency Core Cooling System (ECCS) debris source term.

The Containment Coating Assessment Program is controlled through a Nuclear Generation Department level document. This guidance document specifies details for assessing and developing the condition of all coatings, including qualified/acceptable coatings, located in the Catawba Nuclear Station primary containments. The requirements of the Containment Coating Assessment program are procedurally implemented at Catawba.

A primary containment coatings condition assessment is conducted during each refueling outage. Visual inspections are conducted and documented by ANSI N45.2.6 Level II personnel and/or personnel who have demonstrated overall technical knowledge of coatings. The resultant data is reviewed by the site Coating Specialist and is used to facilitate proper planning and prioritization of coatings maintenance as needed to maintain the integrity of qualified/acceptable primary containment coating systems.

The guidance provided in ASTM D5163, "Standard Guide for Establishing Procedures to Monitor the Performance of Coating Service Level I Coating Systems in an Operating Nuclear Power Plant," and EPRI Report 109937 "Guideline on Nuclear Safety-Related Coatings: Revision 1" (November 2001) is incorporated in the Catawba Nuclear Station primary containment coatings condition assessment program. The primary containment coating condition assessment protocol consists of a visual inspection of all readily accessible coated areas by qualified personnel. The use of visual inspection by qualified personnel for containment coating assessment has been validated by the recently-issued EPRI Report 1014883 "Plant Support Engineering: Adhesion Testing of Nuclear Coating Service Level 1 Coatings" (August 2007).

When degraded coatings are visually identified, the affected areas are documented in accordance with plant procedures. Additional nondestructive and/or destructive examinations are conducted as appropriate to define the extent of the degraded coatings and to enable disposition of the coating deficiency. The guidance contained in EPRI Report 109937 is used as appropriate to disposition areas of degraded coatings when discovered, including:

1. performance of additional in situ and/or laboratory testing of degraded coatings,
2. removal and replacement of degraded coatings,
3. repairing degraded coatings,
4. mitigation of accident consequences related to failure of degraded coatings,
5. leaving in place based on evaluation of effects of failure (detachment) of the degraded coating on ECCS system performance, and/or,
6. upgrading of indeterminate coatings.

The following industry technical documents are used as appropriate in determining the physical characteristics of debris resulting from any degraded coatings identified during primary containment coatings condition assessments:

1. "Analysis of Pressurized Water Reactor Unqualified Original Equipment Manufacturer Coatings", EPRI Report 1009750, March 2005.

2. "Design Basis Accident Testing of Pressurized Water Reactor Unqualified Original Equipment Manufacturer Coatings", EPRI Report 1011753, September 2005.

3. Keeler & Long Report No. 06-0413, "Design Basis Accident Testing of Coating Samples from Unit 1 Containment, TXU Comanche Peak SES."

Request for Additional Information 30

The NRC staff's safety evaluation (SE) addresses two distinct scenarios for formation of a fiber bed on the sump screen surface. For a thin bed case, the SE states that all coatings debris should be treated as particulate and assumes 100% transport to the sump screen. For the case in which no thin bed is formed, the staff's SE states that the coatings debris should be sized based on plant-specific analyses for debris generated from within the ZOI and from outside the ZOI, or that a default chip size equivalent to the area of the sump screen openings should be used (Section 3.4.3.6). Describe how your coatings debris characteristics are modeled to account for your plant-specific fiber bed (i.e. thin bed or no thin bed). If your analysis considers both a thin bed and a non-thin bed case, discuss the coatings debris characteristics assumed for each case. If your analysis deviates from the coatings debris characteristics described in the staff-approved methodology, provide justification to support your assumptions.

Catawba Response:

The modified Catawba ECCS sump strainer utilizes an array of strainer modules (top-hats) that do not exhibit thin-bed formation.

The coatings debris analysis for Catawba followed the staff-approved methodology for the non-thin bed case. The exception is that a ZOI of 5D is assumed in lieu of the 10D ZOI prescribed in the SER based on the results of specific testing performed under WCAP-16568-P.

For post-LOCA debris generation analyses, qualified coatings within the 5D ZOI at the limiting High Energy Line Break location were postulated to fail, as well as all unqualified coatings within the containment building. Qualified coatings within the 5D ZOI and all unqualified coatings are assumed to fail as 10 micron spheres, 100% of which transport to the ECCS sump.

A detailed discussion of coatings debris characteristics and analytical assumptions can be found in Section 3(h) of Enclosure 2.

Request for Additional Information 31
Was/will "leak before break" be used to analyze the potential jet impingement loads on the new ECCS sump screen?

Catawba Response:
The Catawba Nuclear Station Unit 1 ECCS sump strainer will be installed between the Reactor Building Crane Wall and Steel Containment Vessel during 1EOC17 in spring 2008. The Catawba Nuclear Station Unit 2 ECCS sump strainer has been installed between the Reactor Building Crane Wall and Steel Containment Vessel. No credit was taken for "leak before break," since placing the ECCS sump strainer behind the Polar Crane Wall protects the strainer from jet impingement. Leak Before Break methodology was not used in the GSI- 191 determination of debris generated as a result of a LOCA. A fully offset, double ended guillotine break of the primary coolant loop was used for debris source term. The break location chosen was bounding for debris source term. Further details regarding the debris generation evaluation are located in Section 3(b) of Enclosure 2.

Request for Additional Information 32

You indicated that you would be evaluating downstream effects in accordance with WCAP 16406-P. The NRC is currently involved in discussions with the Westinghouse Owner's Group (WOG) to address questions/concerns regarding this WCAP on a generic basis, and some of these discussions may resolve issues related to your particular station. The following issues have the potential for generic resolution; however, if a generic resolution cannot be obtained, plant-specific resolution will be required. As such, formal RAIs will not be issued on these topics at this time, but may be needed in the future. It is expected that your final evaluation response will specifically address those portions of the WCAP used, their applicability, and exceptions taken to the WCAP. For your information, topics under ongoing discussion include:

a. Wear rates of pump-wetted materials and the effect of wear on component operation
b. Settling of debris in low flow areas downstream of the strainer or credit for filtering leading to a change in fluid composition
c. Volume of debris injected into the reactor vessel and core region
d. Debris types and properties
e. Contribution of in-vessel velocity profile to the formation of a debris bed or clog
f. Fluid and metal component temperature impact
g. Gravitational and temperature gradients
h. Debris and boron precipitation effects
i. ECCS injection paths
j. Core bypass design features
k. Radiation and chemical considerations
l. Debris adhesion to solid surfaces
m. Thermodynamic properties of coolant

Catawba Response:

The downstream effects issues identified in this 2006 RAI are addressed via the NRC's "Revised Content Guide for Generic Letter 2004-02 Supplemental Responses", dated November 2007. Catawba responses to these issues are located in Section 3(m), Section 3(n), and Section 3(o) of Enclosure 2.

Request for Additional Information 33

Your response to GL 2004-02 question (d) (viii) indicated that an active strainer design will not be used, but does not mention any consideration of any other active approaches (i.e., backflushing). Was an active approach considered as a potential strategy or backup for addressing any issues?

Catawba Response:

The use of backflushing (or other active mitigative strategies) was not considered feasible for the Catawba modified ECCS strainer design.

Request for Additional Information 34

You stated that Microtherm® insulation (currently installed on portions of the reactor vessel heads) will be replaced, and that this replacement will reduce the postulated post-accident debris loading on the sump strainer. Please discuss the insulation material that will replace the Microtherm® insulation, including debris generation and characteristics parameters. Has the new insulation been evaluated in the debris generation, transport, head loss analyses and other sump design analyses?

Catawba Response:

The Microtherm® insulation on the reactor vessel heads has been replaced on both Catawba units with reflective metal insulation (RMI) during 1EOC16 and 2EOC15, respectively. The debris quantities associated with breaks in this location would be bounded by other limiting breaks generating RMI debris and have not been evaluated beyond consideration of debris generation.

Request for Additional Information 35

You did not provide information on the details of the break selection, ZOI and debris characteristics evaluations other than to state that the Nuclear Energy Institute (NEI) and SE methodology were applied. Please provide a description of the methodologies applied in these evaluations and include a discussion of the technical justification for deviations from the SE-approved methodology.

Catawba Response:

A detailed discussion of the methodologies for Break Selection, Zone of Influence (ZOI), and Debris Characteristics evaluations, as they apply to the modified Catawba ECCS strainer design, are located in Enclosure 2 of this submittal. The specific sections are identified below.

Break Selection Evaluation Methodology

- Enclosure 2, Section 3(a)

Zone of Influence (ZOI) Evaluation Methodologies

- Enclosure 2, Section 3(b) for insulation
- Enclosure 2, Section 3(h) for coatings

Debris Characteristics Evaluation Methodology

- Enclosure 2, Section 3(c) for fiber and particulate debris
- Enclosure 2, Section 3(d) for latent debris

Request for Additional Information 36

Has debris settling upstream of the sump strainer (i.e., the near-field effect) been credited or will it be credited in testing used to support the sizing or analytical design basis of the proposed replacement strainers? In the case that settling was credited for either of these purposes, estimate the fraction of debris that settled and describe the analyses that were performed to correlate the scaled flow conditions and any surrogate debris in the test flume with the actual flow conditions and debris types in the plant's containment pool.

Catawba Response:

Upstream debris settling due to the "near-field effect" is not credited in the head loss testing or in the analytical design basis for the sizing of the Catawba modified ECCS sump strainers. The debris transport calculation (and so the strainer design basis) assumes that 100% of the particulate debris (failed coatings) and latent debris (dust, dirt, and lint) will challenge the strainer after the limiting break. The debris transport fractions for destroyed insulation were determined based on a computational fluid dynamics model.

Request for Additional Information 37

Are there any vents or other penetrations through the strainer control surfaces which connect the volume internal to the strainer to the containment atmosphere above the containment minimum water level? In this case, dependent upon the containment pool height and strainer and sump geometries, the presence of the vent line or penetration could prevent a water seal over the entire strainer surface from ever forming; or else this seal could be lost once the head loss across the debris bed exceeds a certain criterion, such as the submergence depth of the vent line or penetration. According to Appendix A to Regulatory Guide 1.82, Revision 3, without a water seal across the entire strainer surface, the strainer should not be considered to be "fully submerged," Therefore, if applicable, explain what sump strainer failure criteria are being applied for the "vented sump" scenario described above.

Catawba Response:

No vents or other penetrations through the strainer connect the interior of the strainer to the containment atmosphere above the containment minimum water level. The Catawba strainer is designed to be fully submerged and is fully submerged even in the bounding SBLOCA scenario.

Request for Additional Information 38

What is the minimum strainer submergence during the postulated LOCA? At the time that the re-circulation starts, most of the strainer surface is expected to be clean, and the strainer surface close to the pump suction line may experience higher fluid flow than the rest of the strainer. Has any analysis been done to evaluate the possibility of vortex formation close to the pump suction line and possible air ingestion into the ECCS pumps? In addition, has any analysis or test been performed to evaluate the possible accumulation of buoyant debris on top of the strainer, which may cause the formation of an air flow path directly through the strainer surface and reduce the effectiveness of the strainer?

Catawba Response:

Minimum Submergence

During a postulated limiting inventory small break LOCA, the plenum is completely submerged by a minimum of 1.5 inches and the sump pool is covering the top of the vortex suppressor. In addition, the apex of an installed top-hat is an additional 2.25 inches below the top of the plenum. As the accident scenario progresses, and for larger break sizes, greater submergence is assured based upon ice melt and possible Cold Leg Accumulator discharge. As discussed in Section 3(f), item 2 of Enclosure 2 the minimum Catawba ECCS sump strainer submergence predicted for a LBLOCA scenario is at least 3 feet.

*Vortexing Analysis*With an initially clean ECCS sump strainer surface, approach velocities for the top-hat modules closest to the pump suction line are expected to be higher by approximately a factor of two. A full-scale 36 inch long top-hat module was used to test for vortex formation at various approach velocities that exceeded this range, while conservatively maintaining the water level only 3 inches above the top surface of the top-hat perforated plate (the expected minimum water level above this surface is about 4 inches). The approach velocity through the clean module was increased until an air-entraining vortex was formed, and then the vortex suppressor grating was placed into a position above the top-hat module. The air-entraining vortices that formed at higher approach velocities were eliminated by the vortex suppressor grating in each case, and only minor surface dimpling remained. No vortices were observed at lower approach velocities. This testing demonstrates that the Catawba ECCS sump strainers are not susceptible to air-entraining vortex formation.

Accumulated Buoyant Debris

The Catawba ECCS strainer is designed to be fully submerged and un-vented, as identified in the response to RAI #37 of Enclosure 1. The only portion of the post-LOCA debris load that could potentially remain buoyant is the low density fiber glass (LDFG) insulation, and industry testing has shown that this type of debris becomes saturated and sinks very quickly in hot water. The absence of floating debris in the

pool precludes any opportunity for an artificial vent to form between the top-hats and the surface of the water.

Request for Additional Information 39
Please provide a detailed description of the analyses/testing performed to evaluate the new strainer head loss.

Catawba Response:
Detailed discussion regarding the analyses/testing performed to evaluate the modified Catawba ECCS strainer head loss is located in Section 3(f) and Section 3(o) of Enclosure 2.

Request for Additional Information 40
Duke's September 2005 GL response stated that the design of the modified containment sump would accommodate the effects of debris loading as determined by the baseline evaluation, which was under review by Duke, and the ongoing refined evaluation for Catawba and that the evaluations use the guidance of NEI 04-07, "Pressurized Water Reactor Sump Performance Evaluation Methodology, Revision 0," dated December 2004. Please supplement your GL response after completing the review.

Catawba Response:
A supplement to Catawba's GL 2004-02 response based on the NRC's guidance of November 21, 2007 is included as Enclosure 2 of this submittal. Catawba will further supplement its response by April 30, 2008 as committed in its December 5, 2007 letter.

Enclosure 2

Generic Letter 2004-02 Supplemental Responses

Specific Guidance for Review Areas

1. Overall Compliance:
Provide information requested in GL 2004-02 Requested Information Item 2(a) regarding compliance with regulations.

GL 2004-02 Requested Information Item 2(a)
Confirmation that the ECCS and CSS recirculation functions under debris loading conditions are or will be in compliance with the regulatory requirements listed in the Applicable Regulatory Requirements section of this GL. This submittal should address the configuration of the plant that will exist once all modifications required for regulatory compliance have been made and this licensing basis has been updated to reflect the results of the analysis described above.

Catawba Response:
GL 2004-02 Requested Information Item 2(a) requests confirmation of three related items. The first item is confirmation that the ECCS and CSS recirculation functions under debris loaded conditions are in compliance with the regulatory requirements listed in the Applicable Regulatory Requirements section of GL 2004-02:

> The status of Catawba Nuclear Station's compliance with the regulatory requirements includes:
>
> In a letter dated November 1, 2006, Catawba Nuclear Station requested an extension to complete the Unit 1 ECCS sump strainer. The letter requested an extension until the spring 2008 refueling outage to install the Unit 1 ECCS Sump strainer. In addition, on November 22, 2006, at the direction of the NRC, Catawba submitted a License Amendment requesting that a license condition be added to the facility operating license requiring CNS Unit 1 to be in Mode 5 no later than May 19, 2008. Also, the Unit could not return to Mode 4 after May 19, 2008 without the completion of the Unit 1 sump strainer modification. This extension was approved and the amendment was approved by the US NRC in a letter dated October 31, 2007.
>
> In a letter dated December 7, 2007, Catawba Nuclear Station, Units 1 and 2 requested an extension to complete the chemical effects testing and update the associated reports and design documents. Any additional or revised information resulting from the Integrated Performance Test (chemical effects testing) will be provided as an amended response by April 30, 2008.

As designed and installed on Catawba Unit 2, and scheduled to be installed on Catawba Unit 1 in the spring of 2008, the ECCS sump strainer configuration assures the ECCS and CSS recirculation functions under debris loaded conditions. Catawba Nuclear Station anticipates being in full compliance with the applicable regulatory requirements for long term core cooling, containment heat removal, and containment atmospheric cleanup after the Unit 1 Spring outage, currently targeted for Mid-June 2008. Our response by April 30, 2008 will include this confirmation.

The second confirmation item is to describe the configuration of the plant after all modifications are complete:

Catawba Nuclear Station will have installed new ECCS strainers in each Unit to address issues identified in GL 2004-02 after the Unit 1 spring 2008 outage. The modified ECCS sump strainers will have increased the surface area from the original 135 square feet to approximately 2000 square feet. The strainer hole size is reduced from 1/8 inch (original) to less than 3/32 inch nominal (new strainer). The Catawba ECCS sump design is described in detail in the March 29, 2007 License Amendment Request.

Replacement of the Microtherm® insulation, previously installed on portions of the reactor vessel heads, with RMI.

Replacement of the fiberglass blankets (Nukon) insulation on the bottom bowls of the Unit 1 Steam Generators with reflective metal insulation (RMI). This replacement removed approximately 400 cubic feet of fibrous insulation of which approximately 280 cubic feet are below the maximum flood level in containment. Unit 2 does not require a similar modification since RMI insulation is already installed on the bottom SG bowls.

Replacement of the existing orifice plates with smaller diameter orifice plates to allow the ECCS throttle valves to be opened greater than currently allowed for flow balancing. Work on Unit 2 is complete. Unit 1 requires further modification during the Spring 2008 outage since the initial orifice plate sizing modification was not successful in allowing the throttle valves to be opened the proper amount.

The third confirmation item is to describe the licensing basis of the plant once all modifications are made:

The status of the licensing basis updates includes:

A License Amendment Request (LAR) was submitted by Duke on March 29, 2007 and supplemented September 7, 2007, October 9, and October 12, 2007, to update the licensing basis of Catawba Nuclear Station relative to the modified ECCS strainer configuration. The purpose of this LAR was to revise the licensing commitments to Regulatory Guide 1.82, Rev.0, and revise Technical Specification Surveillance Requirement 3.5.2.8. This LAR was approved by amendments 238 (Unit 1) and 234 (Unit 2).

The Updated Final Safety Analysis Report (UFSAR) is being updated to reflect the LAR and the completed installation of the modified ECCS sump strainer for Unit 2. These revisions are being made in accordance with 10CFR50.71(e).

Additional UFSAR changes will be made to update the licensing basis for other aspects of GL 2004-02 to describe the revised debris loaded ECCS sump strainer license basis, including:

- Break Selection
- Debris Generation
- Latent Debris
- Debris Transport
- Head Loss
- Additional Design Considerations

The UFSAR is submitted periodically to the USNRC. Catawba Nuclear Station provides this required update 6 months after each Unit 2 refueling outage. The next refueling outage for Unit 2 is scheduled to end in April 2009. Therefore, the update including these changes will be submitted by Fall 2009.

2. General Description of and Schedule for Corrective Actions: Provide a general description of actions taken or planned, and dates for each. For actions planned beyond December 31, 2007, reference approved extension requests or explain how regulatory requirements will be met as per Requested Information Item 2(b). (Note: All requests for extension should be submitted to the NRC as soon as the need becomes clear, preferably not later than October 1, 2007.)

Catawba Response:
Catawba Nuclear Station has used the guidance of NEI 04-07 to address ECCS sump performance. The analysis results required modifications to the ECCS sump strainers. The Unit 2 modification is complete, and the Unit 1 modification will be complete in Spring 2008.

The following major activities have been completed in support of GL 2004-02:

- Baseline evaluation, performed by Enercon Services, Inc.
- Refined evaluation using the guidance of NEI 04-07, completed by Enercon Services, Inc.
- Downstream effects evaluation using the WCAP-16406-P, Rev.0 methodology.
- Containment walkdowns using the guidance of NEI 02-01, "Condition Assessment Guidelines: Debris Sources Inside PWR Containments"
- The modification process and the plant labeling process have been enhanced relative to GL 2004-02 controls.
- Replacement of the Microtherm® insulation, previously installed on portions of the reactor vessel heads, with RMI.
- Installation of a new ECCS sump strainer in Unit 2 (~2000 sq ft).
- Removal of interferences and scoping in preparation for the installation of the Unit 1 strainer installation.
- Replacement of the fiberglass blankets (Nukon) insulation on the bottom bowls of the Unit 1 Steam Generators with reflective metal insulation (RMI). This replacement removed approximately 400 cubic feet of fibrous insulation of which approximately 280 cubic feet are below the maximum flood level in containment. Unit 2 does not require a similar modification since RMI insulation is already installed on the bottom SG bowls.
- Replacement of the existing orifice plates with smaller diameter orifice plates to allow the ECCS throttle valves to be opened greater than currently allowed for flow balancing. Work on Unit 2 is complete. Unit 1 requires further modification during the Spring 2008 outage since the

initial orifice plate sizing modification was not successful in allowing the throttle valves to be opened the proper amount.

- Completion of the Integrated Prototype Test (chemical effects test)

The Catawba Unit 1 ECCS Sump strainer will be completed in the Spring 2008 refueling outage as allowed by the October 31, 2007 amendment approval letter (Reference RAI #1 of Enclosure 1). The only significant activity remaining is completion of the analysis /report for the Integrated Prototype Test (chemical effects test) and incorporation of the results into the ECCS system NPSH calculations. Any additional or revised information resulting from the Integrated Performance Test (chemical effects testing) will be provided as an amended response by April 30, 2008.

As requested in the staff's extension approval letter dated December 28, 2007 Duke will provide additional information related to the NRC staff-requested evaluation of WCAP-16406, Revision 1 dated August 2007 in the April 30, 2008 submittal.

3(a) Break Selection
The objective of the break selection process is to identify the break size and location that presents the greatest challenge to post-accident sump performance.

3(a)(1) Describe and provide the basis for the break selection criteria used in the evaluation.

Catawba Response:
Break locations were selected for the breaks that produce the maximum amount of debris and also the worst combination of debris mixes with the possibility of being transported to the ECCS sump strainer.

Additionally, breaks that would cause a "thin-bed" effect are given consideration since these also have the potential to significantly impair sump strainer performance. The following break locations were analyzed for Catawba Units 1 and 2:

- Break 1: Locations in the RCS with the largest potential for debris generation.
- Break 2: Locations with two or more different types of debris.
- Break 3: Locations with the most direct path to the sump.
- Break 4: Locations with the largest potential particulate to insulation ratio.
- Break 5: Locations that would generate debris that could potentially form a thin-bed.

Insights in the Catawba break selection process were gained from the NRC SER of NEI 04-07. The SER advocates break selection at 5 ft intervals along a pipe in question but clarifies that "the concept of equal increments is only a reminder to be systematic and thorough." It further qualifies this recommendation by noting that a more discrete approach driven by the comparison of debris source term and transport potential can be effective at placing postulated breaks.

The key difference between many breaks (especially large breaks) will not be the exact location along the pipe, but rather the envelope of containment material targets affected. A 17D ZOI for the Nukon® insulation (jacketed and unjacketed) used on RCS piping and components at Catawba is equivalent to a sphere with an approximate 40 ft radius, depending upon the size of the particular pipe break. A spherical ZOI of this size is bounded by structural barriers surrounding the RCS such as the reactor cavity, the crane wall, and the operating floor slabs. Also, due to the size of this ZOI, the specific location along a particular pipe has little if any impact on the amount of debris generated. Further, a reasonable determination of the most limiting location can be made by inspection of plant equipment drawings. Specific break locations can be selected by plotting the

ZOI along the RCS piping to maximize major targets that fall within the perimeter of the ZOI sphere.

Following initial break selection as described above which was used to design the modified sump strainers, refinements in the break selection criteria were used to develop sump strainer testing parameters. A refined fiber insulation ZOI methodology defined by WCAP-16710-P is incorporated into the Integrated Prototype Test for chemical effects as described in the response to RAI #11 of Enclosure 1. The methodology provides for a 7D ZOI for jacketed fiber insulation in the break selection process. Review of the break locations evaluated using the 17D ZOI for fiber insulation show that the original limiting break for debris generation remains bounding for Catawba Units 1 and 2 when the 7D ZOI is applied to jacketed fiber insulation.

This refinement is discussed in further detail in Section 3(b) of Enclosure 2.

3(a)(2) State whether secondary line breaks were considered in the evaluation (e.g., main steam and feedwater lines) and briefly explain why or why not.

Catawba Response:
Secondary line breaks were not considered in the evaluation of debris generation. The main steam and feedwater piping at the steam generators is the only location that contains fibrous insulation. The majority of the piping is insulated with RMI. The secondary side breaks do not introduce a different type of debris than the primary side breaks. Secondary side pressure is lower than primary side pressure, thus the ZOIs associated with the secondary side break are smaller than for the primary side break. The larger primary side breaks ZOI will result in more fibrous insulation and RMI generated and thus will bound the secondary side breaks for debris generation. The secondary side break is also a short duration event and will result in less engineered safety features (ESF) flow than a primary side break. Additionally, at Catawba the ECCS sump is located outside the crane wall at azimuth 180°. Based on a review of the piping layout drawings, the main steam lines for Loops B and C are located in this area and represent the largest diameter piping. This piping is enclosed within guard pipes that would deflect a break jet back inside the crane wall.

Secondary side breaks were therefore not considered in the evaluation of debris generation, since the primary side breaks are bounding.

3(a)(3) Discuss the basis for reaching the conclusion that the break size(s) and locations chosen present the greatest challenge to post-accident sump performance.

Catawba Response:
As identified in the response to RAI #1 of Enclosure 1, at Catawba the limiting break for debris generation using the unrefined 17D ZOI is the RCS Hot Leg, Loop B. This limiting break is a double-ended guillotine break (DEGB) of a primary loop, located nearest to the ECCS sump and the ECCS sump strainer. This break generates the highest quantity of fiber and causes transportation of the highest amount of fiber to the strainer.

3(b) Debris Generation / Zone of Influence (ZOI) (excluding coatings)
The objective of the debris generation / ZOI process is to determine, for each postulated break location: (1) the zone within which the break jet forces would be sufficient to damage materials and create debris; and (2) the amount of debris generated by the break jet forces.

General Note:
As identified by the Content Guide, the responses provided below relate to debris generation / ZOI of fiber insulation and RMI at Catawba, excluding coatings. The debris generation / ZOI information relating to coatings inside containment is located in Section 3(h) of Enclosure 2. Debris generation information relating to latent debris inside containment is located in Section 3(d) of Enclosure 2.

3(b)(1) Describe the methodology used to determine the ZOIs for generating debris. Identify which debris analyses used approved methodology default values. For debris with ZOIs not defined in the guidance report (GR) / safety evaluation (SE), or if using other than default values, discuss method(s) used to determine ZOI and the basis for each.

Catawba Response:
For the initial evaluation of the generation of insulation debris, the ZOIs assumed were consistent with the default values specified in the NEI 04-07 guidance, including the SER. The methodology used in the initial GSI-191 debris generation evaluation for determining the break ZOIs at Catawba considered the double-ended guillotine break of the largest RCS piping. A spherical zone of influence centered at the break location is used, consistent with NEI 04-07 (and the companion SER) guidance. This initial evaluation provided an ECCS sump strainer area for the modified strainer design at Catawba.

A refined fiber insulation ZOI for jacketed insulation, using the results of specific jet impingement testing reported in WCAP-16710-P, was utilized as an input to the Integrated Prototype Test (IPT) for chemical effects described in detail in the response to RAI #11 of Enclosure 1. This is the only deviation from the SER approved methodology for insulation debris generation. A discussion of the application of this WCAP can be found in the response to item 3(b)(3), below.

3(b)(2) Provide destruction ZOIs and the basis for the ZOIs for each applicable debris constituent.

Catawba Response:
There are four types of insulation debris generated within the break ZOIs evaluated for Catawba: Mirror Reflective Metal Insulation (RMI), jacketed Nukon® fiber insulation, jacketed Thermal-Wrap® fiber insulation, and jacketed Knauf™ fiber insulation. All debris generation estimates within the ZOIs for these types, as reported in the NEI 04-07 guidance, are determined by jet impingement testing.

A small amount of Armaflex™ closed cell foam insulation was also identified in the Catawba walkdown reports (further discussed in section 3(c)(4)). There is no debris distribution or destruction pressure information provided for this type of insulation in the NEI-04-07 guidance or the companion SER. This insulation resides on piping outside the crane wall in lower containment, and is not subject to a break ZOI; therefore it is not included in the Catawba debris source term.

Table 3B2-1 below shows the ZOI radii and destruction pressures for the four Catawba insulation debris types. The ZOIs in this Table reflect the default values given in the NEI 04-07 guidance report. ZOIs for two of the insulation types were refined further as discussed in item 3(b)(3).

Table 3B2-1
ZOI Radii for Catawba Insulation Debris Types

Debris Type	Destruction Pressure (psig)	ZOI Radius/Break Diameter (L/D)
Mirror RMI	2.4	28.6
Nukon® Insulation	6	17
Thermal-Wrap® Insulation	6	17
Knauf™ Insulation**	6	17

3(b)(3) Identify if destruction testing was conducted to determine ZOIs. If such testing has not been previously submitted to the NRC for review or information, describe the test procedure and results with reference to the test report(s).

Catawba Response:
Initial ZOIs for insulation debris were determined using the NEI 04-07 guidance report and the companion SER. These ZOIs were based on NRC-evaluated jet impingement testing as described in those documents, and were used in sizing the modified ECCS sump strainers at Catawba. Further refinements to insulation debris ZOIs were incorporated in the Duke IPT for chemical effects as described in the response to RAI #11 of Enclosure 1. These refined ZOIs (noted previously in Table 3B2-1) are also based on specific jet impingement testing on jacketed Nukon® insulation, and are identified in the WCAP-16710-P test report: "Jet Impingement Testing to Determine the Zone of Influence (ZOI) of Min-K and NUKON® Insulation for Wolf Creek and Callaway Nuclear Operating Plants", dated October 2007. The evaluation within WCAP-16710-P demonstrates a refined 7D ZOI for jacketed Nukon® insulation. The design and properties of jacketed Thermal-Wrap®, jacketed Knauf™, and jacketed Nukon® insulation are sufficiently similar such that this refined ZOI can be applied to all three.

3(b)(4) Provide the quantity of each debris type generated for each break location evaluated. If more than four break locations were evaluated, provide data only for the four most limiting locations.

Catawba Response:
The four most limiting locations for debris generation are those associated with the SG loop LBLOCA breaks (Cases 1 through 4), since these breaks produce the highest Low Density Fiberglass (LDFG) contributions. The estimated generated quantities of insulation debris that follow represent the amounts generated using the initial 17D ZOI described in items (1), (2), and (3) above (i.e., quantities unrefined by WCAP-16710-P).

The quantities of each insulation debris type generated for each of the four most limiting break locations are given in Tables 3B4-1 through 3B4-8. Note that values in parentheses indicate the fraction of the total amount for a specific size distribution.

Table 3B4-1
Non-RMI Debris Quantities – Case 1 (LBLOCA SG Loop A)

Debris Type	Fines	Small Pieces	Unjacketed Large Pieces	Intact Blankets	Total
LDFG Insulation – Crossover Leg	162.4 ft^3	528.2 ft^3	292.9 ft^3	313.5 ft^3	1,297.0 ft^3
LDFG Insulation - Hot Leg	158.6 ft^3	535.1 ft^3	244.2 ft^3	261.3 ft^3	1,199.2 ft^3

Table 3B4-2
RMI Debris Quantities – Case 1 (LBLOCA SG Loop A)

Debris Type	Amount Destroyed by Size Distribution					
Total Amount Destroyed	¼"	½"	1"	2"	4"	6"
76,753 ft^2	3,300 ft^2 (4.3%)	15,504 ft^2 (20.2%)	16,041 ft^2 (20.9%)	19,649 ft^2 (25.6%)	12,895 ft^2 (16.8%)	9,364 ft^2 (12.2%)

Table 3B4-3
Non-RMI Debris Quantities- Case 2 (LBLOCA SG Loop B)

Debris Type	Fines	Small Pieces	Unjacketed Large Pieces	Intact Blankets	Total
LDFG Insulation – Crossover Leg	182.4 ft^3	540.3 ft^3	387.8 ft^3	415.5 ft^3	1,526.0 ft^3
LDFG Insulation - Hot Leg	195.5 ft^3	663.0 ft^3	322.4 ft^3	344.9 ft^3	1,525.8 ft^3

Table 3B4-4
RMI Debris Quantities- Case 2 (LBLOCA SG Loop B)

Debris Type	Amount Destroyed by Size Distribution					
Total Amount Destroyed	¼"	½"	1"	2"	4"	6"
77,706 ft^2	3,341 ft^2 (4.3%)	15,697 ft^2 (20.2%)	16,240 ft^2 (20.9%)	19,893 ft^2 (25.6%)	13,055 ft^2 (16.8%)	9,480 ft^2 (12.2%)

Table 3B4-5
Non-RMI Debris Quantities- Case 3 (LBLOCA SG Loop C)

Debris Type	Fines	Small Pieces	Unjacketed Large Pieces	Intact Blankets	Total
LDFG Insulation – Crossover Leg	174.6 ft^3	507.7 ft^3	377.2 ft^3	404.2 ft^3	1,463.7 ft^3
LDFG Insulation - Hot Leg	196.1 ft^3	669.9 ft^3	285.8 ft^3	305.8 ft^3	1,457.6 ft^3

Table 3B4-6
RMI Debris Quantities- Case 3 (LBLOCA SG Loop C)

Debris Type	Amount Destroyed by Size Distribution					
Total Amount Destroyed	¼"	½"	1"	2"	4"	6"
66,813 ft^2	2,873 ft^2 (4.3%)	13,496 ft^2 (20.2%)	13,964 ft^2 (20.9%)	17,104 ft^2 (25.6%)	11,225 ft^2 (16.8%)	8,151 ft^2 (12.2%)

Table 3B4-7
Non-RMI Debris Quantities- Case 4 (LBLOCA SG Loop D)

Debris Type	Fines	Small Pieces	Unjacketed Large Pieces	Intact Blankets	Total
LDFG Insulation – Crossover Leg	165.9 ft^3	521.7 ft^3	307.9 ft^3	329.8 ft^3	1,325.4 ft^3
LDFG Insulation - Hot Leg	168.4 ft^3	556.1 ft^3	264.2 ft^3	282.9 ft^3	1,271.5 ft^3

Table 3B4-8
RMI Debris Quantities- Case 4 (LBLOCA SG Loop D)

Debris Type	Amount Destroyed by Size Distribution					
Total Amount Destroyed	¼"	½"	1"	2"	4"	6"
64,039 ft^2	2,754 ft^2 (4.3%)	12,936 ft^2 (20.2%)	13,384 ft^2 (20.9%)	16,394 ft^2 (25.6%)	10,758 ft^2 (16.8%)	7,813 ft^2 (12.2%)

3(b)(5) Provide total surface area of all signs, placards, tags, tape, and similar miscellaneous materials in containment.

Catawba Response:
Signs, placards, tags, tape, and similar miscellaneous materials in containment (including dust, dirt, and lint) are defined, for the purposes of the Catawba modified ECCS sump strainer design and debris generation evaluation, as latent debris and miscellaneous latent debris. The total quantity of latent debris inside containment, and the amount of latent debris estimated to be generated as a result of a LBLOCA, is discussed in detail in Section 3(d) of Enclosure 2.

3(c) Debris Characteristics

The objective of the debris characteristics determination process is to establish a conservative debris characteristics profile for use in determining the transportability of debris and its contribution to head loss.

3(c)(1) Provide the assumed size distribution for each type of debris.

Catawba Response:
Three types of debris are generated at Catawba during a postulated accident: destroyed insulation (fibrous and RMI), failed coatings, and latent debris.

As described in Enclosure 2, Section 3(b), for the initial evaluation of the generation of insulation debris, the ZOIs assumed are consistent with the default values specified in the NEI 04-07 guidance, including the SER.

A refined fiber insulation ZOI and size distribution for jacketed insulation, using the results of specific jet impingement testing reported in WCAP-16710-P, was utilized as an input to the Integrated Prototype Test (IPT) for chemical effects described in detail in the response to RAI #11 of Enclosure 1. This is the only deviation from the SER approved methodology for insulation debris generation. A discussion of the application of this WCAP can be found in Enclosure 2, Section 3(b). The results of the IPT employing these refinements are addressed in the response to RAI #12 of Enclosure 1.

Table 3C1-1 below shows the results of proprietary analysis that supports the use of specific size distributions for the initial fiber insulation debris at Catawba in Computational Fluid Dynamics (CFD) analyses. This analysis utilizes guidance found in the SER of NEI-04-07. For Nukon®, Knauf™ and Thermal Wrap® insulation, it was determined that overall fibrous debris size distribution is best defined using three ZOI sub-zones. Item 3(c)(4) below provides additional technical basis for this refinement.

Table 3C1-1
Catawba Initial LDFG Debris Distributions

SIZE	18.6 psi ZOI (7.0 L/D)	10.0-18.6 psi ZOI (11.9-7.0 L/D)	6.0-10.0 psi ZOI (17.0-11.9 L/D)
Fines (Individual Fibers)	20%	13%	8%
Small Pieces (<6" on a side)	80%	54%	7%
Large Pieces (>6" on a side)	0%	16%	41%
Intact (covered) Blankets	0%	17%	44%

The size distribution of destroyed RMI, primarily Diamond Power Mirror Insulation 2-mil SS at Catawba, is depicted in Figure 3C1-1 below. The destruction pressure for this type of insulation with standard banding is 2.4 psi, which corresponds to a ZOI radius of 28.6 pipe diameters as identified by the SER of NEI 04-07. The size distribution for RMI, as provided in NEI-04-07 guidance and the companion SER, is 75% small pieces and 25% large pieces, where small pieces are defined as anything less than 4 inches.

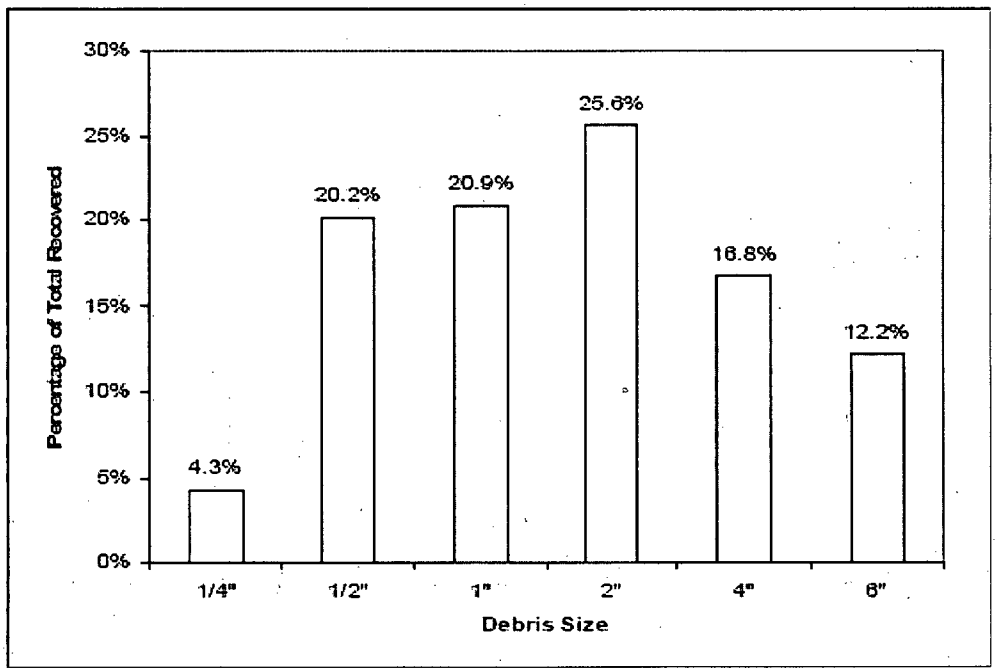

Figure 3C1-1
Catawba RMI Debris Size Distribution

Debris sizes for failed coatings and latent debris (dust, dirt, and lint) can be found in the response to item 2 below. Miscellaneous latent debris (stickers, labels,

and tags) is assumed to have various sizes, and is addressed in Section 3(d) of Enclosure 2.

3(c)(2) Provide bulk densities (i.e., including voids between the fibers/particles) and material densities (i.e., the density of the microscopic fibers/particles themselves) for fibrous and particulate debris.

Catawba Response:
NEI 04-07 and the companion SER (Method 2) provide a conservative estimate of the densities of the latent fibers and particulates (94 lb/ft^3 and 169 lb/ft^3, respectively). To be consistent with the Catawba head loss analysis, the microscopic density of the latent fiber material is conservatively assumed equivalent to that of Nukon® fiberglass (175 lb/ft^3). The NRC SER also states that the particulate size can be estimated by using the NUREG/CR-6224 head loss data for typical mixtures of latent particulate debris. The latent particulate debris size using this methodology is 17.3 microns. Additionally, the NRC SER (Method 2) states that the latent fiber sizing for head loss purposes is assumed to be the same as reported in NUREG/CR-6224 for commercial fiberglass (approximately 7 microns).

The densities of the different debris types generated at Catawba are summarized in Table 3C2-1 below:

Table 3C2-1
Catawba Generated Debris Characteristics

Debris Material	Macroscopic Density (lb/ft^3)	Microscopic Density (lb/ft^3)	Characteristic Size (µm)	Characteristic Size (ft)
Fiberglass Insulation	2.4	175	7.112*	2.33E-05
Latent Fibers	2.4	175***	7.112*	2.33E-05
Qualified Coatings - Epoxies	N/A	94	10**	3.28E-05
Qualified Coatings – IOZ Primer	N/A	457	10**	3.28E-05
Unqualified Coatings	N/A	94 & 98	10**	3.28E-05
Unqualified IOZ Primer	N/A	457	10**	3.28E-05
Latent Dirt/Dust	N/A	169	17.3**	5.68E-05

* - fiber diameter
** - spherical particle diameter
*** - latent fiber microscopic density of Nukon® insulation to be consistent with head loss analysis

3(c)(3) Provide assumed specific surface areas for fibrous and particulate debris.

Catawba Response:
The specific debris characteristic sizes used for fibrous and particulate debris in the head loss analysis are provided in Table 3C2-1 in the response to item 3(c)(2), above.

3(c)(4) Provide the technical basis for any debris characterization assumptions that deviate from NRC-approved guidance.

Catawba Response:
Initial debris characterization assumptions used in the evaluation of estimated generated debris at Catawba are primarily taken from the guidance provided by NEI 04-07 and the associated NRC SER. For the determination of the Catawba fibrous insulation debris size distribution, an extension of the methodology and guidance provided in the SER for NEI 04-07 was necessary.

For a baseline analysis, the NEI 04-07 guidance document recommends a size distribution with two categories: 60% small fines and 40% large pieces. The SER (Appendix VI, Section 3.2) suggested a more refined approach for determining the debris size distribution based on applicable air jet impact tests. Using Appendices II and VI from the SER, a debris size distribution for Nukon® (and via similarity, Knauf™ and Thermal-Wrap®) insulation was developed. It was determined that within the overall break ZOI, the size distribution of fibrous insulation would vary based on the distance of the insulation from the break (i.e., insulation debris generated near the break location would consist of more small pieces than insulation debris generated near the edge of the ZOI). The response to item 3(c)(1) above provides specifics regarding the results of this extended analysis and the resulting assumed size distributions.

A small amount of Armaflex™ wrap insulation, which is a closed cell foam insulation type, resides on the ice condenser defrost drain header line outside of the crane wall in lower containment at Catawba. No debris distribution or destruction pressure information is provided for this type of insulation in the NEI-04-07 guidance or the NRC SER. Being outside the crane wall, this insulation type is not subject to a break ZOI, and therefore is not included in the Catawba debris source term. Transport to the ECCS sump pool is also unlikely, and as closed cell foam, it would float on the containment pool surface rather than submerge. The NRC acknowledged the characteristics of this insulation type in the Crystal River audit report.

Other assumptions regarding debris characteristics are located in the response to RAI #1 of Enclosure 1.

Further refinements (i.e., to jacketed fiber insulation ZOIs) utilizing specific industry testing are incorporated in the Integrated Prototype Test for chemical effects as described by RAI #11 of Enclosure 1, and in Section 3(b) of Enclosure 2.

3(d) Latent Debris
The objective of the latent debris evaluation process is to provide a reasonable approximation of the amount and types of latent debris existing within the containment and its potential impact on sump screen head loss.

3(d)(1) Provide the methodology used to estimate quantity and composition of latent debris.

Catawba Response:
Latent debris, for the purposes of the modified Catawba ECCS sump strainer design and evaluation, is defined as dirt, dust, paint chips, fibers, paper scraps, plastic tags, tape, adhesive, labels, fines or shards of thermal insulation, fireproof barrier, "owner-installed" material (e.g. signs, stickers, etc.), or other materials that may be present in containment prior to a postulated LOCA.

Catawba containment foreign materials walkdowns were conducted using NEI 02-01 guidance for both Units. As a part of these walkdowns, the existence of latent debris was evaluated. The walkdown results were tabulated using walkdown notes and photographs. Only materials that were expected to remain in containment after an outage were included in the inventories.

Subsequent to these walkdowns, a tag and label reduction evaluation was performed to analytically reduce the amount of stickers, labels, and tags that could fail in a postulated LOCA and transport to the ECCS sump pool, using current EQ qualifications and engineering judgment.

An additional 20% was then added to take into account missed materials, areas of low photograph-to-area size ratios, and inaccessible areas due to limited space, outage activities, and high radiation.

The latent debris tabulations were used to develop a reasonable but conservative total square footage of each material by containment area. Generic sampling data (mass densities) from other plants, combined with subjective walkdown observations as to plant cleanliness, were also used to make quantitative estimates of latent debris by containment area.

3(d)(2) Provide the basis for assumptions used in the evaluation.

Catawba Response:
The following discussion provides the assumptions and their bases regarding the treatment of latent debris inside the Catawba containments:

- The amount of dust, dirt, and lint was estimated to be 90 lb in Unit 1 and 113 lb in Unit 2. A bounding value of 200 lb was used in the debris generation evaluation to provide adequate margin.

- Penetration sealant is assumed to fail only in the break ZOI. Foam sealants are identified only in the upper containment and lower containment outside of the crane wall. There are no breaks postulated in upper containment.

- The walkdown report identifies flexible connections in various areas of containment as miscellaneous debris. It is assumed that only the flexible connections within the ZOI will be destroyed. Since these flexible connections are also identified as a type of fabric, the debris is assumed to be a fibrous type. It is reasonable to assume that flexible connections that are outside a break ZOI will not spontaneously fail.

- Per NEI 04-07, the fiber content of the latent dust and dirt debris is assumed to be 15% by mass. With the assumption of 200 lb of latent debris, 30 lb of the debris is considered to be latent fibers. The NRC SER for NEI 04-07 further assumes that the latent fiber bulk density is assumed to be the same as low density fiberglass material (2.4 lb/ft^3). This results in 12.5 ft^3 of latent fibrous debris. NEI 04-07 and the NRC SER Method 2 provide a conservative estimate of the latent fibers and particulate densities (94 lb/ft^3 and 169 lb/ft^3, respectively). To be consistent for the Catawba head loss analysis, the microscopic density of the latent fiber material was assumed to be equivalent to Nukon® fiberglass (175 lb/ft^3). The NRC SER also states that the particulate size can be estimated by using the NUREG/CR-6224 head loss data for typical mixtures of latent particulate debris. The latent particulate debris size using this methodology is 17.3 microns. Additionally, the SER states that the latent fiber sizing for head loss purposes are assumed to be the same as reported in NUREG/CR-6224 for commercial fiberglass (approximately 7 microns).

The following discussion provides the assumptions and their bases for the Tag and Label reduction evaluation in the Catawba containment buildings:

- All assumed percentages are estimated from plant drawings, walkdown experience, and walkdown photos. All percentages were initially estimated and then adjusted to provide conservatism; however, all are based on engineering judgment. The reductions will be applied to the actual tag or label counts and then rounded up to the nearest whole number (i.e. there are no partial tags or labels).

- All tags and labels that detach from their affixed positions are assumed to fall straight down when in the presence of containment spray only (i.e. no

submergence and no jet impingement). The same assumption applies when containment spray is not present, such as in the accumulator and fan rooms above the maximum flood level.

- A large portion of the tags and labels inside the crane wall in lower containment will be in the break's zone of influence (ZOI) and will fail. It is not possible to conservatively estimate the percentage of tag and label surface area that is in the ZOI; therefore, all tags and labels inside the crane wall in lower containment will be assumed to fail.

- Plastic tags outside the ZOI are assumed to stay intact. While there may be some deformation due to the LOCA environment, they are assumed to not become overly pliable (i.e. they will not deform to pass through an obstruction that has a smaller dimension than the tag).

3(d)(3) Provide results of the latent debris evaluation, including amount of latent debris types and physical data for latent debris as requested for other debris under c. above.

Catawba Response:
Latent debris quantities are summarized in Tables 3D3-1 and 3D3-2 below.

Table 3D3-2 represents the Catawba Unit 2 latent debris quantities which were assumed bounding for Unit 1; this assumption was subsequently verified. The quantities tabulated include a tag and label refinement evaluation performed utilizing current EQ qualifications and engineering judgment, as identified in the response to item 3(d)(1) above.

Table 3D3-1
Catawba Latent Debris Quantity (Dust, Dirt, and Lint)

Latent Debris Type	Weight	Volume
Dirt and Dust	170 lb	N/A
Latent Fibers (lint)	30 lb	12.5 ft^3 *

* Based on a bulk density of 2.4 lb/ft^3, similar to LDFG (see assumptions in response to 3(d)(2))

Physical data for dust, dirt, and lint debris types can be found in the response to item 3(d)(2) above.

Table 3D3-2
Catawba Refined Miscellaneous Latent Debris Quantities

Type of Debris	Lower Containment (Inside Crane Wall)	Lower Containment (Outside Crane Wall)	Upper Containment	Ice Condenser	Total
Stickers & Labels (ft^2)	116.611	58.669	21.380	2.850	199.51
Plastic Tags w/Adhesive (ft^2)	1.469	2.774	4.099	4.600	12.942
Plastic Hanging Tags (ft^2)	3.438	5.000	4.450	1.500	14.388
RMI ID Stickers (ft^2)	277.597	66.234	0.000	0.000	343.831
Ice Condenser Debris (ft^2)	N/A	N/A	N/A	15.3	15.3
Total (ft^2)	399.115	132.677	29.929	24.250	585.971

3(d)(4) Provide amount of sacrificial strainer surface area allotted to miscellaneous latent debris.

Catawba Response:
The miscellaneous latent debris total area contribution to sump strainer blockage at Catawba is 586 square feet, as shown in Table 3D3-2 in the response to item 3(d)(3) above.

NEI 04-07 guidance recommends that 75% of the total miscellaneous latent debris transporting to the ECCS sump pool be allotted to sump strainer blockage.

3(e) Debris Transport
The objective of the debris transport evaluation process is to estimate the fraction of debris that would be transported from debris sources within containment to the sump suction strainers.

3(e)(1) Describe the methodology used to analyze debris transport during the blowdown, washdown, pool fill-up, and recirculation phases of an accident.

Catawba Response:
The methodology used to analyze debris transport during the blowdown, washdown, pool fill-up, and recirculation phases of an accident is as follows:

1. Based on containment building drawings, a three-dimensional model was built using computer aided drafting (CAD) software.
2. A review was made of the drawings and CAD model to determine transport flow paths. Potential upstream blockage points including screens, grating, drains, etc. that could lead to water holdup were addressed.
3. Debris types and size distributions were gathered from the debris generation calculation for each postulated break location.
4. The fraction of debris blown to various areas of containment was determined based on the flow of steam during the blowdown.
5. The quantity of debris washed down by ice melt and spray flow was conservatively determined.
6. The quantity of debris transported to inactive areas or directly to the sump strainer during pool fill-up was determined to be negligible.
7. Using conservative assumptions, the locations of each type/size of debris at the beginning of recirculation was determined.
8. A Computational Fluid Dynamics (CFD) model was developed to simulate the flow patterns that would occur during recirculation. Further details regarding the CFD model are located in the response to item 3 below.
9. A graphical determination of the transport fraction of each type of debris was made using the velocity and Turbulent Kinetic Energy (TKE) profiles from the CFD model output, along with the determined initial distribution of debris.
10. The recirculation transport fractions from the CFD analysis were gathered to input into the logic trees.
11. The quantity of debris that could experience erosion due to the break flow, spray flow, or ice melt drainage was determined.

12. The overall transport fraction for each type of debris was determined by combining each of the previous steps in the logic tree.

3(e)(2) Provide the technical basis for assumptions and methods used in the analysis that deviate from the approved guidance.

Catawba Response:
The methodology used in the Catawba debris transport analysis is based on the NEI 04-07 guidance report for refined analyses, as modified by the NRC SER, as well as the refined methodologies suggested by the SER in Appendices III, IV, and VI. The specific effect of each mode of transport was analyzed for each type of debris generated, and a logic tree was developed to determine the total transport to the ECCS sump strainer. Assumptions used in the Catawba debris transport analysis are listed in the response to RAI #1 of Enclosure 1.

The following methodology used in the evaluation deviates from the NEI 04-07 guidance and the companion NRC SER:

- The logic tree approach was different than the baseline logic tree provided in the NEI 04-07 guidance report. The change was made to account for non-conservative assumptions identified by the NEI 04-07 SER, including the transport of large pieces, erosion of small and large pieces, the potential for washdown debris to enter the pool after inactive areas have been filled, and the direct transport of debris to the sump strainer during pool fill-up.

- NEI 04-07 Section 3.4.3 recommends using a two-category size distribution for insulation debris including: (1) small pieces (assumed to be the basic constituent of the material), and (2) large pieces (pieces greater than 4 inches). Although adequate, this size distribution allows for only limited benefit when CFD analyses are used to refine the recirculation pool debris transport fractions. The NRC recognized this limitation in their NEI 04-07 SER. SER Section 4.2.4 recommends a four-category size distribution:

  1. Fines that remain suspended
  2. Small piece debris that is transported along the pool floor
  3. Large piece debris with the insulation exposed to potential erosion
  4. Large debris with the insulation still protected by a covering, thereby preventing erosion

The methodology that can be used to determine the fraction of debris falling within each of the four categories was explained in Appendices II and VI of the SER, but was not fully carried out.

For Catawba debris transport analysis, a complete methodology necessary for assigning a four-category size distribution for low density fiberglass (LDFG) was utilized for initial debris generation calculations. Proprietary analysis of LDFG insulating materials demonstrates that the fraction of fines and small pieces decreases with increasing distance from the break jet, and the fraction of large pieces and intact blankets increases with increasing distance for LDFG.

Additionally, a refined ZOI and size distribution for jacketed fiber insulation, using the results of specific jet impingement testing reported in WCAP-16710-P, was utilized as an input to the Integrated Prototype Test (IPT) for chemical effects described in detail in the response to RAI #11 of Enclosure 1. A discussion of the application of this WCAP can be found in Enclosure 2, Section 3(b). The results of the IPT employing these and other refinements will be addressed in the response to RAI #12 of Enclosure 1 in the April 30, 2008 submittal.

3(e)(3) Identify any computational fluid dynamics codes used to compute debris transport fractions during recirculation and summarize the methodology, modeling assumptions, and results.

Catawba Response:
The CFD calculation for recirculation flow in the Catawba containment sump pool was performed using Flow-3D® Version 9.0.

The CFD model was generated based on the following characteristics:

1. The mesh in the CFD model was nodalized to sufficiently resolve the features of the CAD model, but still keep the cell count low enough for the simulation to run in a reasonable amount of time.
2. The boundary conditions for the CFD model were set based on the configuration of Catawba during the recirculation phase.
3. The ice melt and containment spray flows were included in the CFD calculation, with the appropriate flowrate and kinetic energy to accurately model the effects on the containment sump pool.
4. At the postulated break location, a mass source was added to the model to introduce the appropriate flowrate and kinetic energies associated with the break flow.
5. A negative mass source was added at the sump pool location with a total flowrate equal to the sum of the spray flow and break flow.
6. An appropriate turbulence model was selected for the CFD calculations.
7. After running the CFD calculations, the mean kinetic energy was checked to verify that the model had been run long enough to reach steady-state conditions.

8. Transport metrics were determined based on relevant tests and calculations for each significant debris type present in the Catawba containment break ZOIs.

Assumptions used in the CFD model are as follows:

1. It was assumed the recirculation transport fractions determined for the Catawba Loop B break can be applied to the other breaks inside the crane wall. This is a conservative assumption since the Loop B break location is closest to the ECCS sump strainer.
2. The water falling from the reactor coolant system break was assumed to do so without encountering any structures before reaching the containment sump pool. This is a conservative assumption since any impact with structures would dissipate the momentum of the water and decrease the turbulent energy in the pool.
3. It was assumed that potential upstream blockage points (e.g., drains, fences, grating, etc.) would not inhibit the flow of water.
4. Logic trees were used to determine the fractions of the various types of debris that would reach the containment sump pool. Since the recirculation transport fractions are assumed to be the same for each of the breaks inside the crane wall, the overall transport fraction would also be the same. Logic trees were constructed for small RMI debris, large RMI debris, small low density fiberglass debris, and large low density fiberglass debris. For all RMI debris, it was determined that no debris would transport to the active pool. In addition, since the latent fiber, dirt/dust, and paint particulate were all assumed to reach the recirculation pool and the recirculation transport fraction is 100%, their overall transport fraction is also 100%.

Logic trees are shown in Figures 3E3-1 and 3E3-2 below for small piece fiberglass debris and large piece fiberglass debris, respectively:

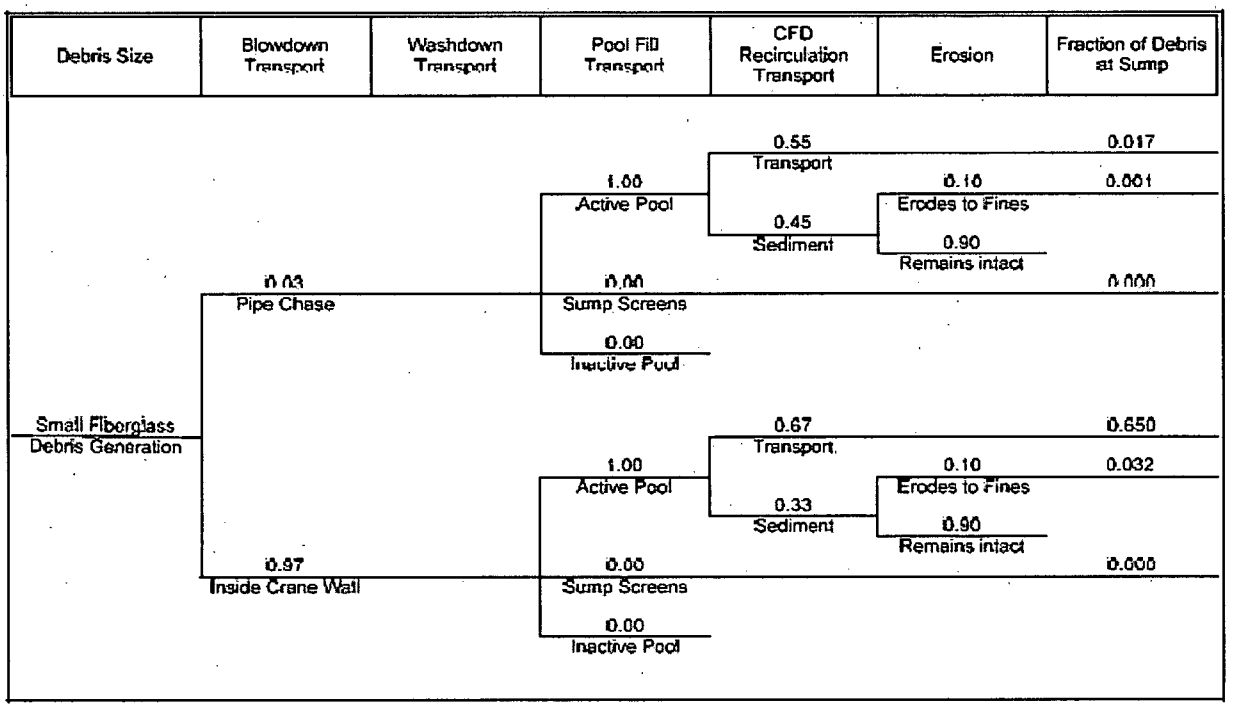

Figure 3E3-1

Catawba Small Piece Fiberglass Debris Transport Logic Tree

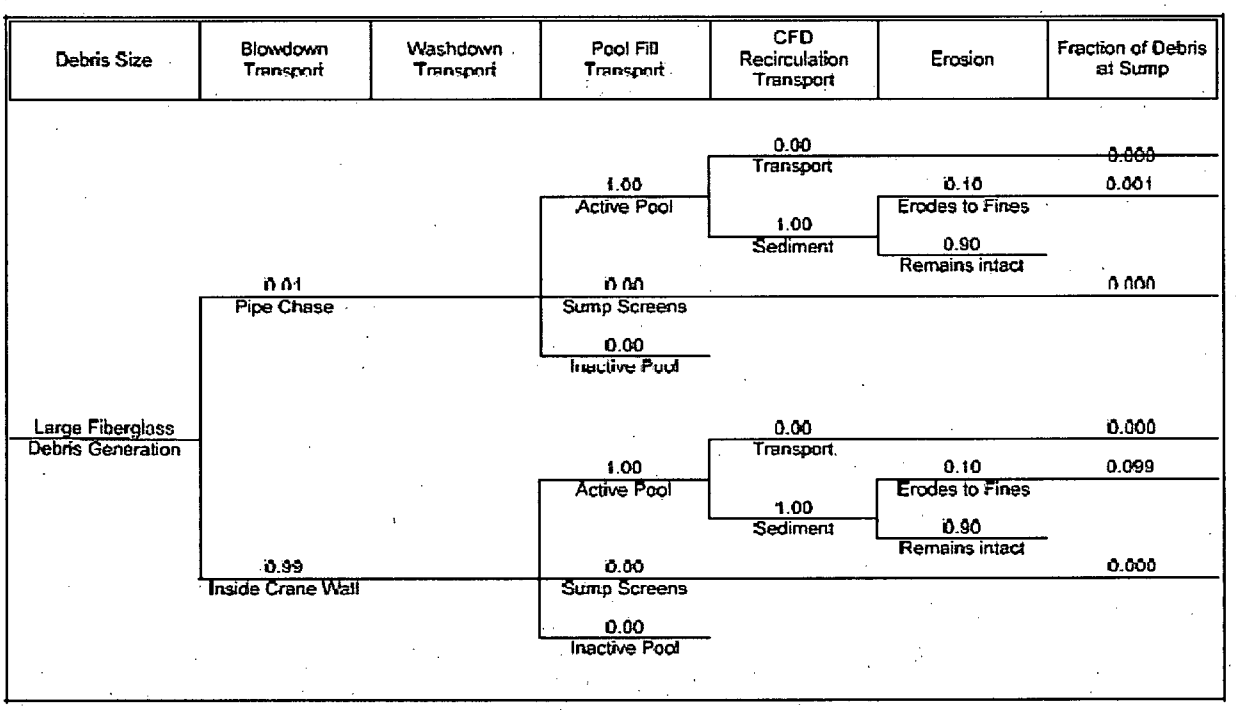

Figure 3E3-2

Catawba Large Piece Fiberglass Debris Transport Logic Tree

3(e)(4) Provide a summary of, and supporting basis for, any credit taken for debris interceptors.

Catawba Response:
The design and placement of the Catawba modified ECCS sump strainer in the pipe chase provides for the filtration of large debris entrained in the sump pool prior to reaching the strainer via passage of water through openings in the crane wall (credited) for those portions of the strainer located outside the crane wall.

Catawba's ECCS sump strainer is located entirely within the pipe chase area. All debris-laden flow to the strainer is first filtered by passage through crane wall penetrations. Most of the debris that might transport through the crane wall and most of the large debris generated in the pipe chase must traverse a torturous flow path before nearing the modified sump strainer due to the large number of structures and interferences that would provide capture of large debris.

Debris filtration by crane wall penetrations is not credited by itself. Debris transport calculations are based on the results of CFD analyses, not the specific crediting of certain structures.

3(e)(5) State whether fine debris was assumed to settle and provide basis for any settling credited.

Catawba Response:
As discussed in the response to RAI #36 of Enclosure 1, for each postulated break, fine debris (i.e., dust, dirt, lint, and failed coatings particulates) was assumed to transport 100% to the Catawba containment sump pool. Upstream fine debris settling is not credited in the head loss testing nor in the analytical design basis of the Catawba modified ECCS sump strainers.

3(e)(6) Provide the calculated debris transport fractions and the total quantities of each type of debris transported to the strainers.

Catawba Response:
Of the five Catawba postulated breaks, the most limiting break (using an unrefined ZOI) is the Reactor Coolant System Hot Leg break in Steam Generator Loop B. The initial calculated debris transport fractions and the total quantities of each type of debris transported to the strainers for the Case 2 Hot Leg break are given in Table 3E6-1. As discussed in item 3(e)(2) above, refinements to the ZOI and size distribution for jacketed fibrous insulation are being incorporated into the final ECCS sump strainer performance evaluation.

Table 3E6-1

Initial Debris Transport to Catawba ECCS Sump Strainers
Case 2 (LBLOCA SG Loop B Hot Leg)

Debris Type	Debris Size	Debris Quantity Generated	Debris Transport Fraction	Debris Quantity at Sump
Stainless Steel RMI	Small Pieces (<4")	55,171 ft^2	0%	0 ft^2
	Large Pieces (>4")	22,535 ft^2	0%	0 ft^2
	Total	**77,706 ft^2**	**0%**	**0 ft^2**
Nukon® and Thermal-Wrap® LDFG (Hot Leg Break)	Fines	195.5 ft^3	100%	195.5 ft^3
	Small Pieces (<6")	663.0 ft^3	70%	464.1 ft^3
	Large Pieces (>6")	322.4 ft^3	10%	32.2 ft^3
	Intact Pieces (>6")	344.9 ft^3	0%	0 ft^3
	Total	**1,525.8 ft^3**	**45%**	**691.8 ft^3**
Qualified Epoxy (5D ZOI)	Total (fines)	155.8 lb	100%	155.8 lb
Unqualified Epoxy	Total (fines)	361.9 lb	100%	361.9 lb
Alkyd Paint	Total (fines)	10.8 lb	100%	10.8 lb
Unqualified IOZ Paint	Total (fines)	171.4 lb	100%	171.4 lb
Dirt/Dust	Total (fines)	170 lb	100%	170 lb
Latent Fiber	Total (fines)	12.5 ft^3	100%	12.5 ft^3
Other Latent Debris	Total	586.0 ft^2	100%	586.0 ft^2

3(f) Head Loss and Vortexing

The objectives of the head loss and vortexing evaluations are to calculate head loss across the sump strainer and to evaluate the susceptibility of the strainer to vortex formation.

General Catawba Response Note

The head loss testing and analysis described in this Section reflect the Catawba ECCS sump strainer in a clean and debris loaded condition (i.e., fiber, particulate, and latent debris). Chemical effects on the debris loaded condition of the strainer are addressed in Section 3(o) of Enclosure 2.

3(f)(1) Provide a schematic diagram of the emergency core cooling system (ECCS) and containment spray systems (CSS).

Catawba Response:

The ECCS schematic for Catawba is shown in Figure 3F1-1 following. The CSS schematic for Catawba is shown in Figure 3F1-2 following.

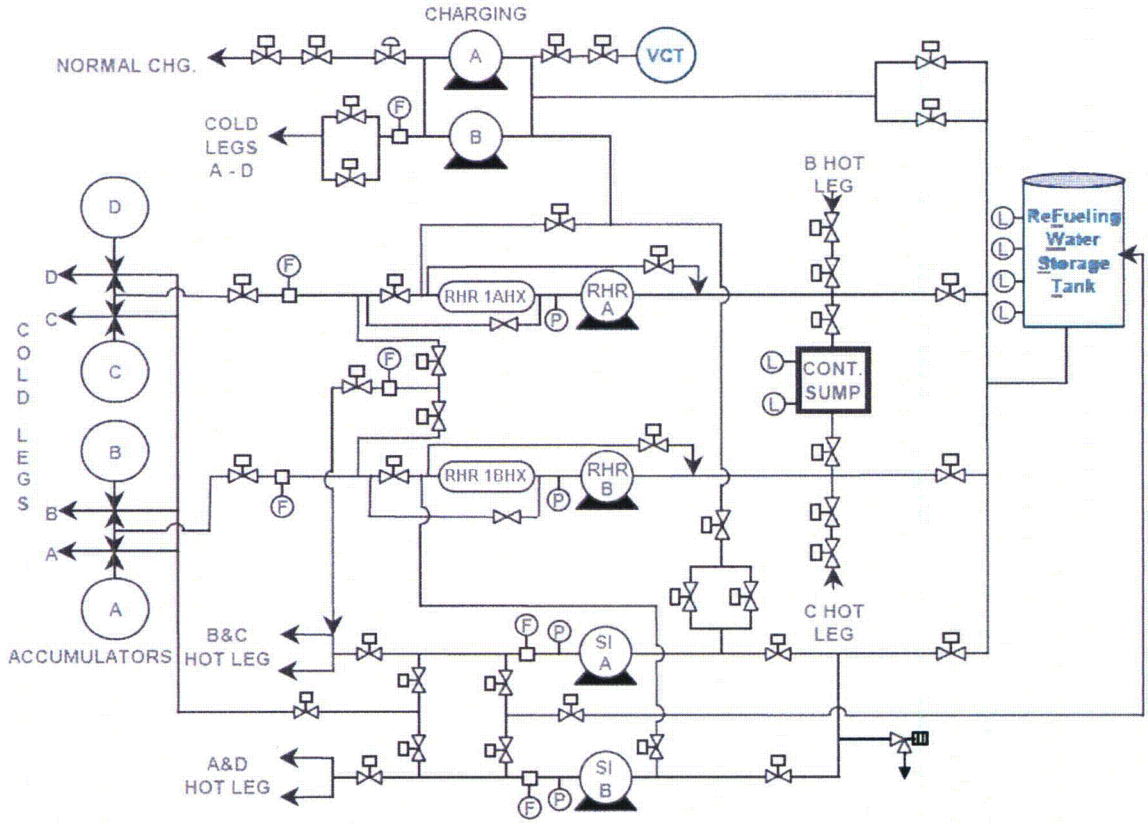

Figure 3F1-1

Catawba Emergency Core Cooling System

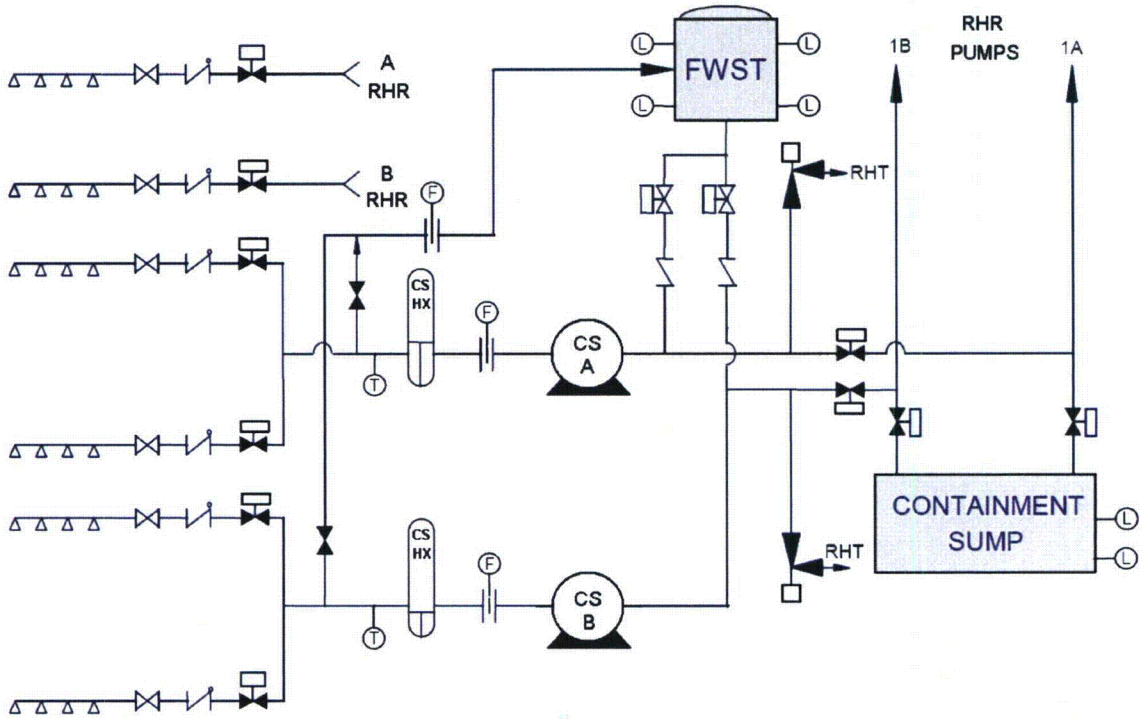

Figure 3F1-2

Catawba Containment Spray System

3(f)(2) Provide the minimum submergence of the strainer under small-break loss-of-coolant accident (SBLOCA) and large-break loss-of-coolant accident (LBLOCA) conditions.

Catawba Response:

As discussed in the response to RAI #38 of Enclosure 1, the limiting analytical case for minimum ECCS sump level at Catawba is characterized as a small break LOCA (SBLOCA) during which Containment Spray does not actuate and there is no water source contribution from ice melt. In addition, the break is in such a location that break flow is diverted to the incore room. In this case, the plenum is completely submerged by a minimum of 1.5 inches and the sump pool is covering the top of the vortex suppressor. In addition, the apex of an installed top-hat is an additional 2.25 inches below the top of the plenum. Thus, the straining surface of the top-hat is submerged by a minimum of 3.75 inches.

The various large break LOCA (LBLOCA) cases generate more water and more submergence than the limiting SBLOCA case outlined above. The LBLOCA cases will have an Ice Condenser contribution to ECCS sump inventory due to ice melt, and at larger postulated break sizes, additional containment sump pool contributions from the RCS and the Cold Leg Accumulator Tanks. As discussed

in RAI #38 of Enclosure 1, the minimum Catawba ECCS sump strainer submergence predicted for a LBLOCA scenario is at least 3 feet.

3(f)(3) Provide a summary of the methodology, assumptions and results of the vortexing evaluation. Provide bases for key assumptions.

Catawba Response:
NUREG-0897 summarizes the results of testing performed at Alden Research Laboratory that determined the susceptibility of forming a vortex in typical PWR sumps. The results of this testing are also contained within Regulatory Guide 1.82. This testing was based on sump layouts that included an open pit with single or dual horizontal and vertical intakes and a screen outside and above the pit. For Catawba, the entire 552'+0" elevation is considered the "sump" and there is no actual pit. The new strainer (including top-hats, flow plenums, and waterboxes) is located on the floor in the sump with multiple suction points into the strainer, and a much greater strainer surface area from which to draw flow. Therefore, the vortex formation parameters presented in Regulatory Guide 1.82 are considered to be overly conservative.

The top-hat strainer modules at Catawba are completely covered by horizontal standard floor grating for the purpose of vortex suppression. The minimum containment water level is at least 2 feet 9 inches above the sump floor; at this water level, the vortex suppression rack is fully submerged and provides assurance that the suction lines will not be susceptible to air ingestion caused by air core vortex formation from the post-LOCA containment building water surface.

Top-hat strainer module testing demonstrates that standard floor grating eliminates air core vortices for top-hat approach velocities ranging from 0.01 ft/sec to 0.09 ft/sec. This testing was performed with a few inches of water coverage above the top hat modules similar to the top hat modules at Catawba. The maximum approach velocity for the top hat modules is approximately 0.045 ft/sec. Since the maximum approach velocity for the top-hat modules at Catawba is within the tested flow condition, and since the submergence is consistent with the tested condition, the Catawba top-hat strainer modules are not susceptible to air ingestion from an air core vortex.

The vortexing evaluation is also described and summarized in the response to RAI #38 of Enclosure 1.

3(f)(4) Provide a summary of the methodology, assumptions, and results of prototypical head loss testing for the strainer, including chemical effects. Provide bases for key assumptions.

Catawba Response:
A detailed discussion of the methodology, design inputs, and assumptions regarding Duke's prototypical head loss testing for the Catawba ECCS sump strainer top-hat modules (i.e., the Integrated Prototype Test [IPT])for chemical effects) is located in the response to RAI #11 of Enclosure 1.

Prototypical head loss testing for the Catawba top-hat strainer modules was performed during an array test, during which various quantities of debris (i.e., fiber and particulate) were allowed to collect on the modules while head loss measurements were made. The data collected from this testing was used to generate a head loss correlation which is used in determining the total head loss across the ECCS sump strainer. Chemical effects on the strainer debris bed are demonstrated via a different prototype test as identified below.

The total calculated head loss of the strainer consists of four parts:

- Head loss across the debris bed (based on top-hat module array test data)
- Head loss across the clean perforated plate mesh surfaces in the top-hats (based on hydraulic analysis)
- Head loss through the waterbox/plenum arrangement connecting the array of top-hats to the ECCS suction piping (based on hydraulic analysis)
- Head loss due to cumulative chemical effects across debris-loaded top-hats (based on chemical effects test data)

The response to RAI #12 of Enclosure 1 indicates that the final head loss calculation will be performed and documented upon the finalization of the IPT. Upon completion of the IPT documentation, a refined debris load head loss calculation will be generated that incorporates any added consequence of tested chemical effects. This is a commitment identified in Duke letter dated December 7, 2007, "Request for Extension of Completion Dates for Catawba Units 1 and 2 Corrective Actions Required by NRC Generic Letter (GL) 2004-02". Duke expects to have this documentation, and to supplement the response to RAI #12, by April 30, 2008.

3(f)(5) Address the ability of the design to accommodate the maximum volume of debris that is predicted to arrive at the screen.

Catawba Response:
As discussed in the response to RAI #39 of Enclosure 1, the predicted head loss for the Catawba modified ECCS sump strainer utilizes test data obtained from a prototypical top-hat module array (2 high × 3 wide). The top-hats used in this array testing were 36 inches long, as this length is representative of the population of top-hat modules on the Catawba strainers. The array test used debris loads (i.e., particulates and fiber) in various quantities postulated to transport to the containment sump after a large-break LOCA. Section 3(e) of Enclosure 2 discusses the debris quantities expected to transport to the Catawba ECCS sump strainer.

Expected Design Behavior
The debris bed initially accumulates non-uniformly on the top-hat. The approach velocity will vary across the individual top-hats and across the array based on the location of the top-hats relative to the suction source. As the debris bed builds up to the maximum load, the debris bed starts to fill the interstitial volume and begins to transition to the circumscribed area of the strainer. Transitioning to the circumscribed area changes the strainer from a complex shape (multiple cylinders with flow passages outside and inside the cylinder) to a simple cylindrical shape with a single outer flow passage. This transition results in a decreased surface area and increased head loss. The debris bed at this point is also more uniform than the thinner beds and results in increased head loss. As the debris bed is more uniform for the maximum load, flow through the debris bed is more uniform and head loss is governed by the bed thickness and approach velocity.

3(f)(6) Address the ability of the screen to resist the formation of a "thin bed" or to accommodate partial thin bed formation.

Catawba Response:
The thin-bed effect is defined as the relatively high head losses that occur across a uniform thin bed of fibrous debris that can sufficiently filter particulate debris to form a dense particulate debris bed. The thin-bed effect is typically seen in testing of a strainer with a simple geometry such as a flat plate. Strainer designs with a more complex geometry are more likely to load non-uniformly, precluding the formation of a thin bed.

The top-hat modules used on the modified Catawba ECCS sump strainers consist of hollow concentric cylinders mounted on a square base. The cylinders are comprised of stainless steel perforated plate.

A series of tests were performed on this top-hat module design for the purpose of determining the head loss at high particulate/fiber ratios. The measured head loss conservatively bounded any head loss that could be achieved with varying fiber quantities. No indication of a thin-bed effect was observed.

Based on results of this testing, it can be concluded that the modified Catawba ECCS sump strainer utilizes an array of strainer modules (top-hats) that do not exhibit thin-bed formation.

The Integrated Prototype Test (IPT) was designed to replicate this feature of the top-hat modules also. The results of this testing, to be reported in spring 2008 as noted in item 3(f)(4) above, are expected to further confirm this conclusion.

3(f)(7) Provide the basis for the strainer design maximum head loss.

Catawba Response:
The predicted maximum head loss across the strainer would be associated with the maximum debris generation case, the maximum debris transport to the ECCS sump pool, the maximum flowrates in the ECCS sump pool, and the lowest sump pool temperature.

3(f)(8) Describe significant margins and conservatisms used in the head loss and vortexing calculations.

Catawba Response:
The assumptions and conservatisms included in the Catawba debris generation evaluation, the debris transport evaluation, and the vortex suppression evaluation are listed and discussed in the response to RAIs #1 and #38 of Enclosure 1. In addition, Sections 3(b), 3(c), 3(d), and 3(h) of Enclosure 2 detail many conservatisms incorporated into the postulated debris challenge at the strainer. This information ultimately applies to both the head loss and vortex calculations, as the ECCS sump strainer and its predicted performance are analytically downstream of the debris quantifications. Significant conservatisms incorporated in the design of the strainer are listed following.

Catawba ECCS Sump Strainer Head Loss Conservatisms

- The quantities of debris that transport to the Catawba modified ECCS sump strainer are conservative due to maximum transport assumptions.
- The curbs around the refueling canal and Containment Air Return Fan pits existing in Upper Containment will act as large debris interceptors, but are not credited in the transport evaluation.
- No credit is taken for debris remaining on structures and equipment above the pool water level.

- No credit is taken for the shielding of insulation and coatings by major equipment in the break ZOI.
- The initial fibrous debris volume from destroyed insulation used for sizing the modified Catawba ECCS sump strainer is based on a 17D break zone-of-influence (ZOI). As discussed in Section 3(b) of Enclosure 2, WCAP-16710-P recommends a 7D ZOI for jacketed fiber insulation based on specific testing.
- The failed coatings debris volume used for sizing the Catawba modified ECCS sump strainer is conservatively high. All unqualified coatings in the Catawba containments are assumed to fail and transport to the ECCS sump as particulate debris during the DBA.
- The assumed flowrate in the Catawba ECCS sump strainer head loss calculations is conservatively high.
- The assumed temperature in the Catawba ECCS sump strainer head loss calculations is conservatively low.

Catawba ECCS Sump Strainer Vortex Evaluation Conservatisms

- As discussed in item 3(f)(3) above, a range of approach velocities were tested in the vortex suppression evaluation; the highest strainer approach velocities tested were higher than the nominal velocities predicted to occur in the Catawba ECCS sump by a factor of three or more. The vortex suppressor successfully eliminated the vortices at all tested approach velocities.
- The water level during the vortex suppression evaluation was maintained only 3 inches above the top surface of the top-hat perforated plate (the expected minimum water level above the top-hat perforated plate at Catawba is about 4 inches).

3(f)(9) Provide a summary of the methodology, assumptions, bases for the assumptions, and results for the clean strainer head loss calculation.

Catawba Response:

Methodology
The following methodology is used to calculate the Clean Strainer Head Loss (CSHL):

1. The strainer net surface area was determined. The net area is defined as the top-hat perforated plate surface area less the area which is unable to take flow due to blockage by stiffener rings, solid margins, or other structural steel.
2. The head loss through a single top-hat was calculated, using data from the Top-hat Array testing.
3. The head loss due to the flow traveling through the plenum was calculated.
4. In order to estimate head loss through the plenum, a hydraulic diameter was calculated for each section with a unique cross sectional area.
5. The largest head loss experienced by a top-hat for its respective flow condition and the plenum head loss was summed to produce the most conservative clean strainer head loss.
6. The clean strainer head loss was calculated for both ECCS Train A and Train B suctions, which are supplied recirculation water through redundant headers. The Catawba strainer consists of three major sections: the A and B Main Plenums, the Train A Extension Plenum, and the Train B Extension Plenum. In addition, a cross-connect extends between the two main plenums allowing a single train to draw suction from the entire strainer. Significant cases considered when calculating the clean strainer head loss are:

   - Two-train recirculation (both RHR and CS systems)
   - Cold Leg recirculation, minimum safeguards (one train each of RHR and CS)

Catawba Clean Strainer Head Loss
The Catawba clean strainer head loss, based on the Unit 2 strainer area, is calculated as 3.63 feet of water for the maximum recirculation flow condition, and 3.44 feet of water for single train RHR/two-train CS operation.

The Catawba Unit 1 ECCS sump strainer has not yet been completed; it will be fully installed in spring 2008. The Unit 1 strainer, when completed, will be approximately the same size as the installed Unit 2.

Assumptions
The following assumptions are made for the Clean Strainer Head Loss calculation:

- Steady, incompressible flow is assumed. By definition, the system is water-solid and single-phase.
- The lowest sump water temperature is assumed to be constant at 60°F. For dynamic head losses, this is conservative.
- The containment pressure is assumed to be 14.7 psia. This assumption is reasonable because the water properties associated with pressure are not significantly affected by the pressure term.
- The head loss across the strainer top-hat modules (including the knitted wire mesh bypass eliminator feature) as a function of the approach velocity is determined by prototype array testing.
- Head losses associated with minor obstructions in the flow path are assumed to be negligible.
- The effective roughness for commercial steel pipe is used for the stainless steel plenum.

3(f)(10) Provide a summary of the methodology, assumptions, bases for the assumptions, and results for the debris head loss analysis.

Catawba Response:
The responses provided in items 3(f)(4), 3(f)(5), 3(f)(7), 3(f)(8) and 3(f)(9) of this section address the methodology, assumptions, bases for assumptions, and results for the Catawba ECCS sump strainer debris bed head loss analysis.

3(f)(11) State whether the sump is partially submerged or vented (i.e. lacks a complete water seal over its entire surface) for any accident scenarios and describe what failure criteria in addition to loss of net positive suction head (NPSH) margin were applied to address potential inability to pass the required flow through the strainer.

Catawba Response:
As discussed in the response to RAI #37 of Enclosure 1, there are no vents or other penetrations through the modified Catawba ECCS strainer connecting the interior of the strainer to the containment atmosphere above the containment

minimum water level. The Catawba strainer is designed to be fully submerged, and as discussed in the response to RAI #38 of Enclosure 1, is fully submerged even in the bounding SBLOCA scenario.

3(f)(12) State whether near-field settling was credited for the head-loss testing and, if so, provide a description of the scaling analysis used to justify near-field credit.

Catawba Response:
Upstream debris settling due to the "near-field effect" is not credited in the head loss testing or in the analytical design basis of Catawba's modified ECCS sump strainers.

3(f)(13) State whether temperature/viscosity was used to scale the results of the head loss tests to actual plant conditions. If scaling was used, provide the basis for concluding that boreholes or other differential-pressure induced effects did not affect the morphology of the test debris bed.

Catawba Response:
The top-hat array testing that generated the head loss correlations for the Catawba ECCS sump strainer top-hats was performed at room temperature, which required that a temperature coefficient be used to scale the head loss results to plant conditions.

As discussed in item 3(f)(8) above, the debris generation and debris transport calculations used to size the Catawba modified ECCS sump strainer produced conservative debris loads. These debris loads were incorporated into the prototype top-hat array test, which was performed to evaluate the top-hat performance under various debris loading conditions.

The prototype array thick bed testing demonstrated the bridging of fibrous debris between the top-hat strainer modules arranged in a 2 × 3 array (i.e., filling in the interstitial volume). The intent of the testing was to show that this bridging, and the subsequent uniform debris loading of the modules, resulted in higher head loss than the thin bed test scenarios. Under these conditions, the interstitial volume of the top-hats is completely filled with fibrous debris, and no evidence of anomalous debris bed formation, including boreholes or other differential pressure induced effects, was observed that was attributed to the test temperature.

The Duke Integrated Prototype Test (IPT) for chemical effects, described in the response to RAI #11 of Enclosure 1, uses the predicted Catawba post-DBA

containment sump pool temperature cool-down profile, so no temperature coefficient is necessary.

3(f)(14) State whether containment accident pressure was credited in evaluating whether flashing would occur across the strainer surface, and if so, summarize the methodology used to determine the available containment pressure.

Catawba Response:
Containment DBA pressure is not credited in the modified Catawba ECCS sump strainer design.

3(g) Net Positive Suction Head (NPSH)

The objective of the NPSH section is to calculate the NPSH margin for the ECCS and CSS pumps that would exist during a loss-of-coolant accident (LOCA) considering a spectrum of break sizes.

3(g)(1) Provide applicable pump flow rates, the total recirculation sump flow rate, sump temperature(s), and minimum containment water level.

Catawba Response:
The Catawba ECCS/CS pump alignment in the containment sump pool recirculation mode requires that the Residual Heat Removal System pumps, taking suction from the sump pool, supply both the Safety Injection and Charging System pump inlets to ensure adequate NPSH is available. The Containment Spray System pumps take flow from the containment sump pool in recirculation mode as well.

Table 3G1-1 below lists the applicable flowrates for the Catawba RHR/CS pumps. The flowrates given in this table are representative flowrates for both Unit 1 and Unit 2.

Table 3G1-1

Catawba RHR / CS Pump Flow Rates

	Flow at Available NPSH	Flow at Required NPSH
Residual Heat Removal Pump Flow	3981 gpm	4500 gpm
Containment Spray Pump Flow	4000 gpm	4800 gpm

Other information requested follows.

- Total ECCS Sump Pool Recirculation Flow Rate: The maximum flowrate in the ECCS sump pool will be produced with multi-train RHR and CS operation, which results in a total analyzed recirculation flow of 16,000 gpm. The limiting recirculation mode NPSH margin for the Catawba CS pumps and RHR pumps occurs when the SI pumps are aligned to the RCS Hot Legs, with an assumed failure of B train RHR. The flowrate for this case is bounded by the multi-train case.
- ECCS Sump Pool Temperatures: 190°F, decreasing to 90°F. As discussed in the response to RAI #11 of Enclosure 1, 190°F is the peak temperature at the beginning of ECCS sump pool recirculation; the pool temperature

declines rapidly after initiation of recirculation, ultimately reaching 90°F at the end of the ECCS mission time.

- As discussed in the response to RAI #38 of Enclosure 1, the limiting analytical case for minimum ECCS sump level at Catawba is characterized as a small break LOCA (SBLOCA) during which Containment Spray does not actuate and there is no water source contribution from ice melt. In addition, the break is in such a location that break flow is diverted to the incore room. In this case, the plenum is completely submerged by a minimum of 1.5 inches and the sump pool is covering the top of the vortex suppressor. In addition, the apex of an installed top-hat is an additional 2.25 inches below the top of the plenum. Thus, the straining surface of the top-hat is submerged by a minimum of 3.75 inches.

3(g)(2) Describe the assumptions used in the calculations for the above parameters and the sources/bases of the assumptions.

Catawba Response:

General Assumptions

- No credit is taken for increased containment pressure during an accident.
- Containment ECCS sump pool temperature is 190°F.
- Benchmarking is based on a full FWST and no RCS overpressure. Pipe resistances were increased to simulate closing of throttle valves.
- RHR/CS pump required NPSH is taken at a flowrate above that achievable based on system resistance.
- The hydraulic model was based on a Unit 1 model which is assumed to also be applicable to Unit 2. This assumption is supported by:
  1. Similar ECCS/CS pump hydraulic capability.
  2. The most limiting pump NPSH required value was used for the acceptance criteria.
  3. The overall system configuration/resistance and flowrates are similar, with the exception that the 1B RHR pump discharge orifice has a higher resistance than the Unit 2 counterpart. Therefore, the Unit 2 orifice resistance is used in the model.
  4. Suction piping configuration differences and resultant losses are judged to be insignificant.

ECCS Sump Pool Temperature Assumptions

See the response to RAI #11 of Enclosure 1 for the model and assumptions used in generating this temperature profile.

ECCS Sump Pool Minimum Water Level Assumptions
See the response to RAI #38 of Enclosure 1 for the model and assumptions used in generating the minimum sump pool water level.

3(g)(3) Provide the basis for the required NPSH values, e.g., three percent head drop or other criterion.

Catawba Response:
The required NPSH values for the ECCS/CS pumps are taken from the applicable pump head curves. In determining required NPSH values, flowrates beyond the limiting flow rates for the hydraulic model were conservatively used.

3(g)(4) Describe how friction and other flow losses are accounted for.

Catawba Response:
The methodology and assumptions used for the hydraulic modeling of the modified Catawba ECCS sump strainer are located in Section 3(f), item 3(f)(9). For the remainder of the connected ECCS/CS piping systems, hydraulic models are generated using standard methodologies which apply appropriate resistance coefficients and friction factors (e.g., the ECCS/CS NPSH calculations include a representative piping roughness factor based on commercial steel piping).

3(g)(5) Describe the system response scenarios for LBLOCA and SBLOCAs.

Catawba Response:
Upon initiation of a LBLOCA or SBLOCA, the ECCS/CS systems respond as described following:

Large Break LOCA
The ECCS will automatically start and align for Injection Phase upon receipt of a Safety Injection signal. The CSS will automatically start on high-high Containment Pressure. During the Injection Phase, water is taken from the Refueling Water Storage Tank and injected into the RCS through the cold legs. Dependent upon break size, the Cold Leg Accumulator tanks will also discharge into the RCS.

Upon reaching the Refueling Water Storage Tank (FWST) low level setpoint, the Cold Leg Recirculation Phase is entered, where the RHR pumps and CSS pumps take suction from the containment ECCS sump pools. The RHR pumps then supply flow to the SI and Charging pump inlets. Only one train of RHR is required for the ECCS sump pool recirculation alignment.

To help control containment pressure after the ice beds have melted, one train of auxiliary containment spray from the RHR System is also initiated.

At approximately 6 hours into the accident, the Hot Leg Recirculation Phase is entered where the ECCS pumps supply flow to both Hot and Cold Leg injection lines (SI to the RCS Hot Legs and RHR to the RCS Cold Legs). SI pump flow to the cold legs is isolated for hot leg recirculation.

Small Break LOCA
For SBLOCAs, the break size determines ECCS/CS involvement. If the break is small, Charging System flow will provide make-up from the FWST until the plant is stabilized. CSS pumps will likely not be needed for control of containment pressure, and recirculation from the ECCS sump pool would also not be expected. For larger SBLOCA scenarios, SI will also initiate, most likely on a low RCS pressure signal, and take flow from the FWST. For breaks of this size the ice condenser melt water will provide ECCS sump inventory, along with the RCS break flow and FWST contribution. ECCS recirculation will be initiated only when the appropriate ECCS sump pool level setpoint is reached. CS will be initiated only if necessary, taking suction from the ECCS sump pool when the appropriate (higher) ECCS sump pool level setpoint is reached.

3(g)(6) Describe the operational status for each ECCS and CSS pump before and after the initiation of recirculation.

Catawba Response:
Prior to the initiation of recirculation, during the injection mode, the ECCS and CSS pumps will be operating as follows:

- Both RHR pumps normally on and injecting from FWST.
- Both CS pumps normally on and spraying from FWST.
- Both SI pumps normally on and injecting from FWST.
- Both Charging pumps normally on and injecting from FWST.

ECCS sump recirculation mode is initiated from decreasing FWST level indication. As the initiation of ECCS sump pool recirculation approaches, the ECCS and CSS pumps are realigned and operate as follows:

- ECCS sump valves auto open at the FWST low level setpoint and the RHR suction valves from the FWST automatically close once the sump valves open.
- RHR Pumps are both running, taking suction from containment sump pool and supplying the Charging/SI pump inlets.

- All Charging and SI pumps are runningand are aligned to take suction from the RHR pump discharge, injecting into the RCS Cold Legs.
- At the low-low FWST level alarm, the CS pumps are manually secured. The CS pump suction is realigned to the containment sump pool,and both CS pumps are restarted.

3(g)(7) Describe the single failure assumptions relevant to pump operation and sump performance.

Catawba Response:

ECCS Components
The Catawba ECCS components are designed such that a minimum of one Charging Pump, one SI Pump, one RHR Pump, and three Cold Leg Accumulators, together with their associated valves and piping, will assure adequate core cooling in the event of a Design Basis Loss of Coolant Accident.

ECCS Sump Strainer
At Catawba, a single, shared (non-redundant) strainer is utilized. The need to maintain two physically separated containment sumps or ECCS/CSS train separation within the same sump is unnecessary.

This is described in Duke letter to USNRC dated March 29, 2007 "License Amendment Request Revising Catawba Units 1 and 2 Commitments to USNRC Regulatory Guide 1.82, Revision 0, "Sumps For Emergency Core Cooling and Containment Spray Systems" and Revising Technical Specification Surveillance Requirement (SR) 3.5.2.8 and Associated Bases".

3(g)(8) Describe how the containment sump water level is determined.

Catawba Response:
Two containment water level indicator channels provide the Control Room with ECCS sump water level indication. Additionally, two level switches are provided to annunciate when realignment to the ECCS sump is allowable for the ECCS and CS pumps.

3(g)(9) Provide assumptions that are included in the analysis to ensure a minimum (conservative) water level is used in determining NPSH margin.

Catawba Response:
The assumed minimum containment sump pool water level for determining NPSH margin is 2 feet, 9 inches. The assumptions used in the analysis producing this pool level are located in Section 3(f) of Enclosure 2.

This sump water level is used since it is the minimum height of water required to support full ECCS operation. Actual water level would be significantly higher for larger breaks due to ice melt and cold leg accumulator discharge. This higher water level is not credited.

3(g)(10) Describe whether and how the following volumes have been accounted for in pool level calculations: empty spray pipe, water droplets, condensation and holdup on horizontal and vertical surfaces. If any are not accounted for, explain why.

Catawba Response:
A SBLOCA is the limiting case for pool minimum volume calculations. In determining applicable inventory penalties for SBLOCAs, the following diversions were accounted for:

- Incore Room Diversion
- Volume Control Tank (VCT) Diversion
- Pressurizer Relief Tank (PRT) Diversion
- Lower Containment Ventilation (VL) Diversion
- Re-filling the reactor coolant system to water solid (filling the pressurizer), including reactor coolant system shrinkage.

The following volumes were accounted for when determining Upper Containment Holdup Volume:

- Refueling Canal Equilibrium Holdup
- Refueling Deck Holdup (3-inch curb around the refueling canal)
- CS System Piping Volume
- Airborne spray volume (droplets) in Upper Containment
- Water held up in containment draining down walls

3(g)(11) Provide assumptions (and their bases) as to what equipment will displace water resulting in higher pool level.

Catawba Response:
Various types of large robust miscellaneous equipment (e.g., tanks, housings, piping, supports, rupture restraints, and base plates) were assumed to displace water in the determination of ECCS sump volume. Smaller miscellaneous equipment (e.g., small bore piping, cable trays, HVAC duct, and tubing) were conservatively excluded. In addition, the calculation conservatively does not take water displacement credit for insulation around pipes.

3(g)(12) Provide assumptions (and their bases) as to what water sources provide pool volume and how much volume is from each source.

Catawba Response:
The following conservative initial condition assumptions are made in determining the volume of water available for the ECCS sump inventory for any break size inside Containment:

- Refueling Water Storage Tank (FWST): The credited volume for the FWST is the Technical Specification minimum allowable volume. Emergency Procedure guidance directs that ECCS pumps be realigned to recirculation mode at the FWST low-low level indication. This level is error-adjusted upward to conservatively reflect maximum remaining tank volume and minimize injected volume.
- Reactor Coolant System: The initial Reactor Coolant Hot Full Power Mass is converted to the Reactor Coolant Mass at 200°F and 300 psia for break conditions.
- Ice Condenser Ice Bed Inventory: The ice bed total mass is assumed to be at the technical specification minimum.
- Cold Leg Accumulators: For larger break sizes, the technical specification nominal inventory volume in the Cold Leg Accumulators is assumed to discharge into the RCS.

3(g)(13) If credit is taken for containment accident pressure in determining available NPSH, provide description of the calculation of containment accident pressure used in determining the available NPSH.

Catawba Response:
No credit is taken for containment accident pressure in the Catawba ECCS/CS pump NPSH calculations.

3(g)(14) Provide assumptions made which minimize the containment accident pressure and maximize the sump water temperature.

Catawba Response:
The following significant analytical conditions related to containment accident pressure and temperature response are assumed at the onset of a postulated LBLOCA event:

- Containment pressure is assumed to be atmospheric. No credit is taken for containment accident pressure in the Catawba ECCS/CS pump NPSH calculations.
- FWST water inventory temperature is assumed to be at the technical specification maximum.
- FWST inventory is assumed to be at its technical specification minimum.
- Nuclear Service Water (ultimate heat sink) temperature is assumed to be conservatively high.
- Ice bed inventory is assumed to be at the technical specification minimum.
- Minimum safeguards are assumed

3(g)(15) Specify whether the containment accident pressure is set at the vapor pressure corresponding to the sump liquid temperature.

Catawba Response:
No credit is taken in ECCS/CS pump NPSH calculations for increased containment pressure during an accident. The vapor pressure input to the available NPSH hydraulic model for the ECCS/CS pumps is taken at the sump pool maximum temperature of 190°F at atmospheric pressure.

3(g)(16) Provide the NPSH margin results for pumps taking suction from the sump in recirculation mode.

Catawba Response:
The limiting NPSH margin for the Catawba RHR/CS pumps taking suction from the ECCS sump pool in recirculation mode is shown in Table 3G16-1.

The limiting NPSH available values shown in the Table assume no ECCS sump strainer differential pressure losses or entrance losses from the suction piping. Strainer differential pressure losses generally are time dependent and largely offset by vapor pressure reduction and sump pool level increase over time. The refined debris-loaded head loss predicted at the ECCS sump strainer, including chemical effects, is discussed in Section 3(f) of Enclosure 2.

Table 3G16-1

Catawba RHR / CS Pump NPSH Margins

	NPSH Required (ft-water)	NPSH Available (ft-water)	NPSH Margin (ft-water)
CS Pumps	20	30	10
RHR Pumps	16	33	17

As described in the response to RAI #12 of Enclosure 1, the total ECCS sump strainer head loss for the Catawba strainers will be based on the results of the Integrated Prototype Test (IPT). The IPT is more fully described in the response to RAI #11 of Enclosure 1. Upon completion of the IPT documentation, a refined debris load head loss calculation will incorporate any added consequence of tested chemical effects. This is a commitment identified in Duke letter dated December 7, 2007 "Request for Extension of Completion Dates for Catawba Units 1 and 2 Corrective Actions Required by NRC Generic Letter (GL) 2004-02".

Final limiting NPSH margins for the Catawba RHR/CS pumps will be determined based on the refined debris-loaded head loss calculation results and reported in the response to RAI #12 of Enclosure 1. Duke expects to have this documentation and to supplement the response to RAI #12 by April 30, 2008.

3(h) Coatings Evaluation
The objective of the coatings evaluation section is to determine the plant-specific ZOI and debris characteristics for coatings for use in determining the eventual contribution of coatings to overall head loss at the sump screen.

3(h)(1) Provide a summary of type(s) of coating systems used in containment, e.g., Carboline CZ 11 Inorganic Zinc primer, Ameron 90 epoxy finish coat.

Catawba Response:
The qualified coatings systems for the concrete surfaces and the steel structures and components inside containment consist of:

- Carboline 890
- Valspar 76-Series High Build
- Valspar 89-C-3-00
- Valspar 13-F-12KR-00 MZ #7 Primer
- Valspar 89-Series Epoxy
- Carbozinc 11 SG Primer

The unqualified coatings inside containment consist of:

- Epoxy
- Alkyd Enamel
- Cold galvanizing

3(h)(2) Describe and provide bases for assumptions made in post-LOCA paint debris transport analysis.

Catawba Response:
The following assumptions relating to failed coatings debris are made for the debris transport analysis:

- It is assumed that the settling velocity of fine debris (including paint particulate) can be calculated using Stokes' Law. This is a reasonable assumption since the particulate debris is generally spherical and would settle slowly (within the applicability of Stokes' Law).
- The unqualified coatings in containment are assumed to be uniformly distributed in the containment pool at the beginning of recirculation. This is a reasonable assumption since the unqualified coatings are scattered in small quantities throughout containment. The assumption for distribution is not significant since particulate is so readily transported.

- The qualified coatings are assumed to be Carboline 890 since this system has the largest qualified coating thickness.
- In accordance with the NRC SER of NEI 04-07 , all unqualified coatings in containment are assumed to fail, as well as all qualified coatings within the break ZOI.
- It is assumed that failed coatings in upper containment are washed down by containment sprays. 100% of paint fines located in the ice condenser and upper containment are assumed to washdown and transport to the strainer.
- All failed coatings (including coatings inside the break ZOI and unqualified coatings outside the break ZOI), are conservatively assumed to be particulate. No coating debris in the size/shape of paint fines or paint chips is considered.

3(h)(3) Discuss suction strainer head loss testing performed as it relates to both qualified and unqualified coatings and what surrogate material was used to simulate coatings debris.

Catawba Response:
Two sets of debris head loss tests were performed for the Catawba ECCS sump strainer design. A Top-hat Array Test, utilizing horizontally positioned top-hat strainer modules in a 2 × 3 arrangement, was conducted to determine the susceptibility of the top-hats to the thin-bed effect and to determine the head loss correlation using representative debris loading challenges, including particulates. This testing is also described in the response to RAI #39 of Enclosure 1. A surrogate, SIL-CO-SIL™ 53 Ground Silica was used for the failed qualified and unqualified coatings in the Top-hat Array Test.

Subsequently, an Integrated Prototype Test was performed utilizing one horizontally positioned top-hat module, to determine actual head loss during the ECCS mission time using refined debris loading, including particulates, and chemical effects. This testing is described further in the response to RAI #11 of Enclosure 1. For this test, silica oxide flour (1250 Novacite®) represented the failed qualified and unqualified coatings. No surrogate for failed inorganic zinc coatings was used in this test, since McGuire contains the bounding particulate load for the Duke ice condenser plants and has no inorganic zinc coatings.

In the containment sump pool, the particulate material will occupy a certain volume in the fibrous debris space resulting in increased resistance to flow and higher head loss. The surrogate material volume was therefore adjusted in both of these tests to match the volume of the failed coatings particulate for coatings that are less dense than the surrogate.

3(h)(4) Provide bases for the choice of surrogates.

Catawba Response:
SIL-CO-SIL™ 53 Ground Silica is the surrogate used to represent the failed qualified and unqualified coatings at Catawba in the Top-hat Array Test. The ground silica material specific gravity is 2.65, which corresponds to a density of 165 lb/ft^3; epoxy and alkyd coatings densities range from 94 lb/ft^3 to 98 lb/ft^3 per NEI 04-07 guidance. The ground silica is a spherical particulate ranging in size from just under 1 micron to approximately 100 microns. The majority of the failed coatings are on the order of 10 microns in size or greater. Since a significant portion of the ground silica material is less than 10 microns, the ground silica would tend to produce a debris bed with a lower porosity and higher surface-to-volume ratio than a debris bed comprised of failed coating material alone. Thus, the use of ground silica as a surrogate for failed coating debris in the Top-hat Array Test is conservative.

Silica oxide flour (1250 Novacite®) represented the failed qualified and unqualified coatings in the Integrated Prototype Test. This particulate debris surrogate material was selected based on chemical reactivity and a comparison of the microscopic densities of the material. Epoxy and alkyd coatings densities range from 94 lb/ft^3 to 98 lb/ft^3 per NEI 04-07 guidance; silica oxide flour has a material specific gravity of 2.65, corresponding to a microscopic density of 165 lb/ft^3. The particle size for failed epoxy and alkyd coatings is assumed to be 10 microns. The silica oxide flour surrogate material is a spherical particulate where 99% is less than 45 microns in diameter and 69% is less than 10 microns.

3(h)(5) Describe and provide bases for coatings debris generation assumptions. For example, describe how the quantity of paint debris was determined based on ZOI size for qualified and unqualified coatings.

Catawba Response:
When considering the quantification of post-accident coatings debris generation, the guidelines presented in the NRC SER of NEI 04-07 were followed. Per NEI 04-07, qualified and unqualified coatings within the ZOI are assumed to fail as a result of impingement and post-accident environmental conditions. Qualified coatings outside the ZOI are assumed to remain intact and adhered to their substrate.

A CAD model of containment was used to determine the area of qualified coatings within the ZOI for each break in consideration. The volume of qualified coatings within the ZOI was calculated based on a maximum of 12 mils thick for concrete floors and walls and a maximum of 11 mils thick for steel surfaces.

The following assumptions are made in the Catawba debris generation evaluation related to coatings:

- Per NEI 04-07 guidance, all unqualified coatings in containment are assumed to fail as 10 micron spheres during the HELB; the containment walkdown reports are used as the basis for the quantity of unqualified coatings.
- Qualified coatings in the break ZOI are also assumed to fail as 10 micron spheres. The walkdown report and coatings specifications were used to determine the type, thickness, and number of coats applied.
- Qualified coatings are assumed to fail within a 5D ZOI as defined by the WCAP-16568-P methodology, in lieu of the 10D ZOI defined by the NRC SER of NEI 04-07 .
- The qualified coatings were assumed to be Carboline 890 because this system had the largest qualified coating thickness.

Other assumptions related to the transport of failed coatings debris are identified in the response to item 3(h)(2) above.

Table 3H5-1 below shows the ZOI radius and destruction pressure for Catawba qualified coatings.

Table 3H5-1

ZOI Radius for Catawba Qualified Coatings

Debris Type	Destruction Pressure (psi)	ZOI Radius/Break Diameter (L/D)
Protective Coatings (epoxy and epoxy-phenolic paints)	Not measured**	5.0

** The approach taken for testing was to position the test coupon a distance from the jet and observe the coatings performance. If no degradation of coatings was observed, a ZOI was calculated using the ANSI/ANS 58.2-1988 jet expansion model. A specific destruction pressure was not measured.

Postulated qualified and unqualified coatings debris quantities are located in the response to item 3(h)(6) below.

3(h)(6) Describe what debris characteristics were assumed, i.e., chips, particulate, size distribution and provide bases for the assumptions.

Catawba Response:
All failed coatings (including coatings inside the break ZOI and unqualified coatings outside the break ZOI), are conservatively assumed to be particulate. No coating debris in the size/shape of paint fines or paint chips is considered.

The NEI 04-07 guidance report and companion SER are followed for the coatings debris evaluation, and conservatively assume that the coatings will all fail as highly transportable 10 micron spherical particles. The qualified coating materials at Catawba are a maximum of 12 mils thick for concrete floors and walls and a maximum of 11 mils thick for steel surfaces. It is conservative to assume all of this coating material will erode to pigment-sized particles. Further, qualified coatings are assumed to be Carboline 890 since this system has the largest qualified coating thickness.

The debris characteristics and postulated debris quantities for Catawba qualified and unqualified coatings are shown in Tables 3H6-1 through 3H6-3 below:

Table 3H6-1

Catawba Qualified Coatings Characteristics

Area Within ZOI	Area (ft^2)	Thickness	Analysis Size	Volume (ft^3)	Density (lb/ft^3)	Weight (lb)
Concrete Surfaces	465	12 mils	10 micron	0.47	118	55.5
Steel Surfaces	930	11 mils	10 micron	0.85	118	100.3
Total	1,395	N/A	10 micron	1.32	118	155.8

*DFT: Dry Film Thickness

Table 3H6-2

Catawba Unit 1 Unqualified Coatings Characteristics

Coating Material	Total Area (ft^2)	DFT* (mils)	Analysis Size	Volume (ft^3)	Density (lb/ft^3)	Weight (lb)
Epoxy	7,704	6	10 micron	3.85	94	361.9
Alkyd Enamel	908	1.5	10 micron	0.11	98	10.8
Total	8,612	N/A	10 micron	3.96	N/A	372.7

*DFT: Dry Film Thickness

Table 3H6-3

Catawba Unit 2 Unqualified Coatings Characteristics

Coating Material	Total Area (ft^2)	DFT* (mils)	Analysis Size	Volume (ft^3)	Density (lb/ft^3)	Weight (lb)
Epoxy	7,682	6	10 micron	3.84	94	361
Alkyd Enamel	485	1.5	10 micron	0.06	98	5.9
Cold Galvanizing	1,500	3.0	10 micron	0.375	457	171.4
Total	9,667	N/A	10 micron	4.275	N/A	538.3

*DFT: Dry Film Thickness

3(h)(7) Describe any ongoing containment coating condition assessment program.

Catawba Response:
The comprehensive Duke Energy Corporation Containment Coatings Assessment Program in effect at Catawba is used to identify degraded qualified/acceptable coatings and determine the amount of debris that will result from these coatings. This program also ensures that qualified/acceptable coatings remain in compliance with plant licensing requirements for design-basis accident (DBA) performance.

This assessment program is discussed in detail in the response to RAI #25 of Enclosure 1.

3(i) Debris Source Term Refinements
The objective of the debris source term refinements section is to identify any design and operational refinements taken to reduce the plant debris source term.

Provide the information requested in GL 04-02 Requested Information Item 2(f) regarding programmatic controls taken to limit debris sources in containment.

GL 2004-02 Requested Information Item 2(f)
A description of the existing or planned programmatic controls that will ensure that potential sources of debris introduced into containment (e.g., insulations, signs, coatings, and foreign materials) will be assessed for potential adverse effects on the ECCS and CSS recirculation functions. Addressees may reference their responses to GL 98-04, "Potential for Degradation of the Emergency Core Cooling System and the Containment Spray System after a Loss-of-Coolant Accident Because of Construction and Protective Coating Deficiencies and Foreign Material in Containment," to the extent that their responses address these specific foreign material control issues.

In responding to GL 2004 Requested Information Item 2(f), provide the following:

3(i)(1) A summary of the containment housekeeping programmatic controls in place to control or reduce the latent debris burden. Specifically for RMI/low-fiber plants, provide a description of programmatic controls to maintain the latent debris fiber source term into the future to ensure assumptions and conclusions regarding inability to form a thin bed of fibrous debris remain valid.

Catawba Response:
Duke's August 7, 2003 response to Bulletin 2003-01, "Potential Impact of Debris Blockage on Emergency Sump Recirculation at Pressurized Water Reactors," described planned actions regarding containment cleanliness. These actions have been implemented and provide for containment cleaning and visual inspections:

- Containment cleaning is conducted prior to Mode 4.
- Extensive containment cleaning is conducted using water spray. In general, washdowns are limited to the space in lower containment that would be submerged under large break LOCA conditions. Accessible floor and wall surfaces and mechanical equipment are washed down.

- Localized washdowns are performed as directed by Radiation Protection personnel.
- Visual inspections are performed on remaining areas of containment. Identified potential debris is cleaned or removed, as necessary.
- Containment cleanliness is verified prior to entry into Mode 4 by an inspection controlled by procedure. This cleanliness inspection ensures that the ECCS sump area is free of debris. Containment foreign material exclusion (FME) controls and inspection activities are implemented during Modes 1 through 4. Catawba FME control practices and inspection activities assuring containment cleanliness during Modes 1 through 4 are described as follows:
    - Containment entries during normal power operations are controlled by an administrative procedure.
    - Increased material accountability control at CNS is achieved by requiring material accountability logs be kept for items carried into and out of containment during normal power operations (Modes 1 through 4).

3(i)(2) A summary of the foreign material exclusion programmatic controls in place to control the introduction of foreign material into the containment.

Catawba Response:
As part of the housekeeping/material condition programmatic controls, containment cleanliness at Catawba is verified prior to entry into Mode 4 by an inspection controlled by procedure. This cleanliness inspection ensures that the ECCS sump area is free of debris. Containment FME controls and inspection activities are implemented during Modes 1 through 4. Catawba FME control practices and inspection activities assuring containment cleanliness during Modes 1 through 4 are described as follows:

- Containment entries during normal power operations are controlled by an administrative procedure.
- Increased material accountability control at Catawba is achieved by requiring material accountability logs be kept for items carried into and out of containment during normal power operations (Modes 1 through 4).

3(i)(3) A description of how permanent plant changes inside containment are programmatically controlled so as to not change the analytical assumptions and numerical inputs of the licensee analyses supporting the conclusion that the reactor plant remains in compliance with 10 CFR 50.46 and related regulatory requirements.

Catawba Response:
Duke's modification process currently includes an administrative procedure that directs the design and implementation of engineering changes in the plant. This procedure directs that engineering changes be evaluated for system interactions. As part of this evaluation, there is direction to include consideration of any potential adverse effect with regard to debris sources and/or debris transport paths associated with the containment sump.

3(i)(4) A description of how maintenance activities including associated temporary changes are assessed and managed in accordance with the Maintenance Rule, 10 CFR 50.65.

Catawba Response:
Risk management per 10CFR50.65 a(4) at Catawba is managed programmatically during both innage periods and outage periods, as described following:

Operational Risk Management (Modes 1-3) per 10CFR 50.65 a(4)

To ensure compliance with 10CFR 50.65 a(4), risk assessments are performed prior to conducting maintenance at Catawba. Maintenance includes all activities traditionally associated with identifying and correcting degraded conditions including corrective maintenance, plant Engineering Changes, and preventive maintenance including surveillance, predictive and preventive activities.

Temporary alterations are maintenance-related activities that do not permanently alter the design or design function of plant structures, systems, or components (SSCs). NEI 96-07, "Guidelines for 10CFR 50.59 Implementation", includes discussion to advise between three distinct but related topics: Maintenance Rule, Maintenance Activities, and Temporary Alterations. Compliance with 10CFR 50.65 a(4), Maintenance Rule, requires any temporary alteration to be evaluated for risk prior to performing the work. Once these alterations are in place, they may exist for ninety days of power operation before they must be considered as potentially being a permanent Engineering Change.

Since the temporary alterations are associated with maintenance activities, no review is required under 10CFR 50.59 unless the measures are expected to remain in place for greater than ninety days of power operation. If, during power

operation, the temporary alteration is expected to be in effect for greater than ninety days, the temporary alteration is screened and if necessary evaluation performed under 10CFR 50.59 prior to implementation.

Shutdown Risk Management (Modes 4, 5, 6, and No-Mode) per 10CFR 50.65 a(4)

Consistent with 10CFR 50.65 a(4) requirements for outage periods, maintenance activities at Catawba during outages are cognizant of the risk associated with work evolutions, and the out-of-service duration of risk significant components are managed to mitigate risk.

For activities that create temporary alterations such as lifting leads, placing jumpers on terminals, and installing trips and bypasses, the associated equipment is considered to be out of service. Conservatively, the SSC is considered to be unavailable to perform its function and is evaluated as such during the risk assessment.

If an SSC is required to be available with a temporary alteration in place, an evaluation of the effects of the alteration must be performed. Only after evaluation can the SSC be determined to be available with temporary alterations in place.

For activities that install other temporary alterations such as scaffold, lead shielding, and supports, programs are in place to evaluate and control the effects of those alterations.

3(i)(5) If any of the following suggested design and operational refinements given in the guidance report (guidance report, Section 5) and SE (SE, Section 5.1) were used, summarize the application of the refinements.

- **Recent or planned insulation change-outs in the containment which will reduce the debris burden at the sump strainers.**
- **Any actions taken to modify existing insulation (e.g., jacketing or banding) to reduce the debris burden at the sump strainers.**
- **Modifications to equipment or systems conducted to reduce the debris burden at the sump strainers.**
- **Actions taken to modify or improve the containment coatings program.**

Catawba Response:

Change-out of Insulation

While Catawba maintains the strategic option to replace insulation, the change out of insulation in the Catawba containments to reduce the debris burden at the ECCS sump strainers is not necessary to be in full compliance with the requirements of GL 2004-02.

Modify Existing Insulation

As discussed in the response to RAI #34 of Enclosure 1, and as committed in Duke's September 1, 2005 follow-up response to Generic Letter 2004-02, Microtherm® insulation installed on the Unit 1 and Unit 2 reactor vessel heads has been removed and replaced with reflective metal insulation (RMI).

Additionally, fiberglass blankets (Nukon®) insulation on the bottom bowls of the Catawba Unit 1 Steam Generators have been replaced with reflective metal insulation (RMI). This replacement removed approximately 400 cubic feet of fibrous insulation of which approximately 280 cubic feet are below the maximum flood level in containment. Unit 2 does not require a similar modification since RMI insulation is already installed on the steam generator bottom bowls.

Modify Other Equipment or Systems

Electromark® labels have been qualified to IEEE Standard 323-1974. Subsequently they have been removed from the debris generation quantification for all areas of containment except inside the crane wall in lower containment, since much of the area inside the crane wall is within the zone of influence (ZOI) and all labels and tags are assumed to fail.

Modify or Improve Coatings Program
As discussed in detail in the response to RAI #25 of Enclosure 1, a primary containment coatings condition assessment is conducted during each refueling outage or any other extended outage. The primary containment coating condition assessment protocol consists of a visual inspection of all readily accessible coated areas by qualified personnel. When degraded coatings are visually identified, the affected areas are documented in accordance with plant procedures. Additional nondestructive and/or destructive examinations are conducted as appropriate to define the extent of the degraded coatings and to enable disposition of the coating deficiency. The guidance contained in EPRI Report 109937 is used as appropriate to disposition areas of degraded coatings when discovered, including:

1. Performance of additional in situ and/or laboratory testing of degraded coatings,
2. Removal and replacement of degraded coatings,
3. Repairing degraded coatings,
4. Mitigation of accident consequences related to failure of degraded coatings,
5. Leaving coating in place based on evaluation of effects of failure (detachment) of the degraded coating on ECCS system performance, and/or
6. Upgrading of indeterminate coatings.

If, after identification, degraded qualified/acceptable coatings will be left in place during plant operation, the degraded qualified/acceptable coatings are assumed to fail and to be available for transport to the ECCS sump. After each containment coatings condition assessment, the quantity listing of degraded coatings is updated, and the revised quantity of degraded coatings is verified to meet the acceptance limit in the ECCS debris source term analysis.

3(j) Screen Modification Package
The objective of the screen modification package section is to provide a basic description of the sump screen modification.

3(j)(1) Provide a description of the major features of the sump screen design modification.

Catawba Response:
The modified ECCS Sump Strainer Assembly design for Catawba removes the original ECCS sump structure and replaces it with strainer assemblies consisting of a series of stainless steel tubular modules (top-hats) connected by a plenum to water boxes. The top-hats are constructed from two concentric, rolled perforated plates. The openings in the perforated plate are 3/32 inch diameter nominal. Sandwiched between the concentric tubes of each top-hat module is a bypass eliminator, fabricated from fine knitted wire. This component is designed to further filter fine entrained debris that has already penetrated the perforated top-hat exterior. The RHR/CSS recirculation lines are connected to the main plenum of the strainer assembly using 18-inch piping. Horizontal vortex suppressors are installed above the top-hat strainer assemblies.

The modified Catawba strainer is installed entirely in the pipechase outside the polar crane wall (see Figure 3J1-1). There are no pipe whips or water/steam jet loads projected to occur within the Catawba pipechase.

The modified sump structures are nuclear safety-related assemblies designed to withstand safe shutdown earthquake loadings and protected from tornado missiles by virtue of being located within the Containment Building which is, in turn, protected by the seismically designed Reactor Building. These structures are passive assemblies qualified for all design environmental conditions in the sump.

The objective of the new strainer design is to provide acceptable flow with minimal head loss at the specified debris loads and to ensure adequate NPSH to the RHR/CSS Pumps during the post-LOCA Recirculation Phase. The new strainer offers approximately 2000 square feet of surface area versus the original 135 square feet total for the original sump screens.

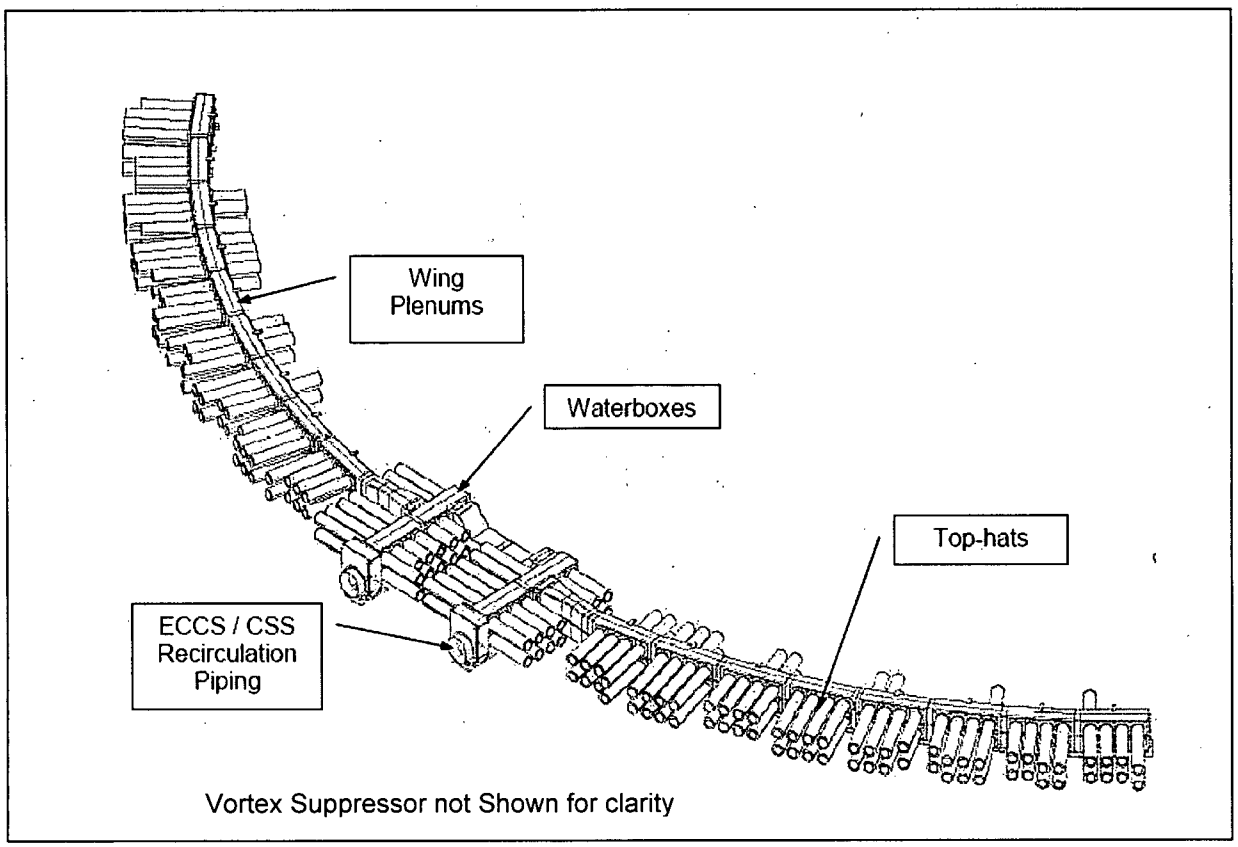

Figure 3J1-1

Catawba Modified ECCS Sump Strainer

3(j)(2) Provide a list of any modifications, such as reroute of piping and other components, relocation of supports, addition of whip restraints and missile shields, etc., necessitated by the sump strainer modifications.

Catawba Response:
A summary of noteworthy modifications necessitated by the Catawba Unit 1 and Unit 2 modified ECCS sump strainer installations appears below.

Unit 1

Piping reroutes
Liquid Waste System Piping Reroute
Component Cooling/ Station Air Interference Removal
Liquid Waste System Interference Removal
Charging System Interference Removal

Support/Restraint Revisions
Safety Injection/Service Water/RCS S/R Removal
SI/Service Water/RCS System S/R Interference Removal

Other
Charging/Safety Injection Flow Orifice
Electrical Cable Tray Reroute
ECCS Sump Valve Bypass Leakage Accumulator Tank/Drain

Unit 2

Piping reroutes
Liquid Waste System Piping Reroute
Component Cooling/ Station Air Piping Reroutes
Charging System Piping Reroute

Support/Restraint Revisions
SI/Sampling/Charging/Service Water/Liquid Waste/Instrument Air System Supports

Other
Electrical Interferences/Cable Tray Reroute
Charging/Safety Injection Flow Orifices
ECCS Sump Valve Bypass Leakage Accumulator Tank/Drain

3(k) Sump Structural Analysis
The objective of the sump structural analysis section is to verify the structural adequacy of the sump strainer including seismic loads and loads due to differential pressure, missiles, and jet forces.

Provide the information requested in GL 2004-02 Requested Information Item 2(d)(vii).

GL 2004-02 Requested Information Item 2(d)(vii)
Verification that the strength of the trash racks is adequate to protect the debris screens from missiles and other large debris. The submittal should also provide verification that the trash racks and sump screens are capable of withstanding the loads imposed by expanding jets, missiles, the accumulation of debris, and pressure differentials caused by post-LOCA blockage under flow conditions.

3(k)(1) Summarize the design inputs, design codes, loads, and load combinations utilized for the sump strainer structural analysis.

Catawba Response:
The structural analysis of the Catawba modified ECCS sump strainer assembly was performed in separate calculations for the top-hat modules, main strainer structure, wing wall plenums and water boxes, and the vortex suppression rack.

The design inputs and loads that were used in the structural calculations are summarized in Table 3K1-1 below.

Table 3K1-1

Catawba ECCS Sump Strainer Structural Analysis Inputs/Loads

Design Input		Top-hat module*	Main Structure Excluding Wing Walls/Water Boxes	Structure Including Wing Walls/Water Boxes	Vortex Suppression Rack
Temperature		300 °F	300 °F	250 °F	250 °F
Differential Pressure		7 psid	7 psid	7 psid	NA
Dead Weight		0.29 lb/in^3	0.29 lb/in^3	0.29 lb/in^3	0.29 lb/in^3
Live Load		-	-	-	50 psf
Misc. Load (Cable Tray/Conduit)		-	-	-	27 lb/ft (U2) 160 lb (U1)
Seismic	ZPA Frequency	20 Hz	20 Hz	20 Hz	20 Hz
	Damping	2%	2%	2%	2%
	Max SSE Horizontal Acc.	0.94 g	0.94 g	0.94 g	0.94 g
	Max SSE Vertical Acc.	0.63 g	0.63 g	0.63 g	0.63 g

* Bounding top-hat length is 45 inches for structural analysis

Table 3K1-2 below shows the design load combinations for the Main Structure, the Plenum Wing Walls and Waterboxes, and the Vortex Suppression Rack. For this table, Fs represents the allowable stress in steel as specified in AISC Part 1, and Fy represents the allowable stress in steel as specified in AISC Part 2.

Table 3K1-2

Load Combinations for Catawba ECCS Sump Strainer

Load Combinations (Main Structure, Plenum Wing Walls and Waterboxes, and Vortex Suppression Rack)	
Load Case 1	DL (Dead Load) + OL (Operating Load) = Fs
Load Case 2	DL + OL + OBE = Fs
Load Case 3	Not used
Load Case 4	DL + OL + Ta (Accident Thermal Load) + Pa (Accident Pressure Load) = 0.9 Fy
Load Case 9	DL + OL + SSE + Ta + Pa = 0.9 Fy

The load combination used for the Top-hat structural calculations is Dead Weight + SSE (including hydrodynamic mass) + Differential Pressure.
The AISC Manual of Steel Construction, 9th edition, was used to qualify the design structure except for stainless steel studs, bolts, and welds. Stainless steel studs and bolting were qualified per ASME Section III, Division 1, Section NF-3324.6 and Appendix F. Welds for stainless steel material were qualified per AWS D1.6.

3(k)(2) Summarize the structural qualification results and design margins for the various components of the sump strainer structural assembly.

Catawba Response:
Results of the structural analysis concluded that the design of the Catawba modified ECCS sump strainer, including the Top-hats, the Main Structure, the Plenum Wing Walls and Waterboxes, and the Vortex Suppression Rack, meets all AISC, AWS, and ASME code allowable stresses.

3(k)(3) Summarize the evaluations performed for dynamic effects such as pipe whip, jet impingement, and missile impacts associated with high-energy line breaks (as applicable).

Catawba Response:
Catawba's sump strainer is located entirely within the pipechase area. As a result, it will not be subjected to missile loads, jet impingement, or pipe whip.

3(k)(4) If a backflushing strategy is credited, provide a summary statement regarding the sump strainer structural analysis considering reverse flow.

Catawba Response:
As identified in the response to RAI #33 of Enclosure 1, the use of backflushing (or other active mitigative strategies) was not considered feasible for the Catawba modified ECCS strainer design.

3(l) Upstream Effects
The objective of the upstream effects assessment is to evaluate the flowpaths upstream of the containment sump for holdup of inventory which could reduce flow to and possibly starve the sump.

Provide a summary of the upstream effects evaluation including the information requested in GL 2004-02 Requested Information Item 2(d)(iv).

GL 2004-02 Requested Information Item 2(d)(iv)
The basis for concluding that the water inventory required to ensure adequate ECCS or CSS recirculation would not be held up or diverted by debris blockage at choke-points in containment recirculation sump return flowpaths.

3(l)(1) Summarize the evaluation of the flow paths from the postulated break locations and containment spray washdown to identify potential choke points in the flow field upstream of the sump.

Catawba Response:
The evaluation of post-accident ECCS sump inventory holdup in the Catawba containments includes physical diversions (e.g., curbs and filled CS piping) as well as potential debris blockage. The minimum ECCS sump pool level to ensure strainer submergence for SBLOCA events is discussed here, including the assumptions for lost inventory due to physical diversions. The potential loss of ECCS sump inventory due to debris blockage is addressed following.

Physical Inventory Diversion
The limiting analytical case for minimum ECCS sump level at Catawba can be characterized as a small break LOCA (SBLOCA) during which Containment Spray does not actuate and there is no water source contribution from ice melt. In addition, this containment analysis conservatively accounts for potentially diverted ECCS injection inventory.

The analysis assumes a small break of indeterminate size which fills up the incore instrumentation room (located below the reactor vessel), but has insufficient energy to cause the Containment Spray system to actuate. No ice melt is credited in this analysis. Credited water for this specific accident includes the Technical Specification minimum inventory from the Refueling Water Storage Tank (FWST), and the FWST low-low level setpoint is conservatively error-adjusted upward to minimize the usable FWST volume. The following ECCS sump inventory penalties (lost water sources) are applied in this analysis:

- Reactor Coolant System shrinkage
- Incore instrumentation room diversion

- Volume Control Tank diversion
- Pressurizer Relief Tank diversion
- Lower containment ventilation system condensation diversion (loss of lower containment condensate through drain pans and drain lines)

Debris Blockage
The lower containment at Catawba is basically made up of two compartments – the area inside the Crane Wall and the Pipechase. These two areas are connected at lower elevations by a number of crane wall penetrations on each Unit, ranging in diameter up to 12 inches. The majority of these penetrations are centered at least 3 feet above the floor. Although it is possible for some of these penetrations to clog with debris, it is unlikely that a sufficient number of the penetrations would become clogged sufficiently to create a situation where the ECCS sump could be starved. The computational fluid dynamics (CFD) model used for the evaluation of debris transport (discussed in detail in Section 3(e) of Enclosure 2) provides the basis for this engineering judgment.

Other potential choke points include the ice condenser drains and the refueling canal drains. Catawba has a total of twenty 12-inch ice condenser drains for draining the melting ice. If one of these drains were to become clogged, the water would flow to the other drains. It is not likely that all 20 drains would become sufficiently clogged with debris to keep the water from flowing to the containment sump pool. The refueling canal in each Unit has six 8-inch drains that are open during operation. Four of the drains discharge inside the crane wall, and the other two discharge into the pipe chase. The plant was designed so that the majority of the upper containment spray water flows to lower containment through these six drains. Given the size of these drains and the debris postulated to be washed down with the sprays (latent debris, paint chips and/or particulate, and possibly a small quantity of LOCA generated fines blown past the ice baskets) these drains are not likely to become clogged. Finally, the Catawba debris generation calculation does not postulate significant amounts of debris being generated in upper containment, since this area is outside the limiting break zone of influence.

3(l)(2) Summarize measures taken to mitigate potential choke points.

Catawba Response:
Catawba Technical Specification Surveillance Requirement (SR) 3.5.2.8 requires that the ECCS sump be visually inspected to verify there are no restrictions as a result of debris, and no evidence of structural distress or abnormal corrosion present prior to declaring the ECCS sump operable. A visual inspection of containment is performed to ensure no loose material is present which could be transported to the Containment Sump and cause restriction of the ECCS pump

suction during accident conditions prior to the transition from Mode 5 to Mode 4 operations. When these inspections are performed, major outage work is complete, and any remaining loose material in containment must be logged and tracked in accordance with station procedures for control and accountability. If any debris, damage or deficiency were to be discovered during the inspection, station processes require entry into the corrective action program, with the requisite investigation and implementation of appropriate corrective action prior to the transition from Mode 5 to Mode 4.

Catawba Technical Specification 3.6.15 applies to the ice condenser drains and the refueling canal drains. An inspection of the refueling canal drain is required to ensure that each canal drain valve is locked open and each drain is not obstructed by debris prior to entering Mode 4 from Mode 5 after partial/complete fill of the canal. A visual inspection is performed every 92 days to verify that no debris is present in the upper compartment or refueling canal that could obstruct the refueling canal drains. Lastly, each ice condenser floor drain valve is visually inspected and physically tested every 18 months to ensure it is not impaired by ice, frost or debris, the valve seat shows no evidence of damage, the valve opening force is not excessive, and the drain from the ice condenser floor to the lower compartment is unrestricted.

3(l)(3) Summarize the evaluation of water holdup at installed curbs and/or debris interceptors.

Catawba Response:
The evaluation of post-accident ECCS sump inventory holdup in the Catawba containments includes physical diversions as well as potential debris blockage. The minimum ECCS sump pool level evaluation to ensure strainer submergence in the limiting SBLOCA scenario is discussed in detail in the response to 3(l)(1) above, including the assumptions for lost inventory due to physical diversions. For a larger break that would cause the Containment Spray system to actuate, there would be additional inventory not available for the ECCS sump (e.g., due to curbs in upper containment and filled CS piping). This inventory loss would be offset by ice melt contributions, since a break size that would actuate Containment Spray would also lead to the opening of the Ice Condenser Lower Inlet Doors.

3(I)(4) Describe how potential blockage of reactor cavity and refueling cavity drains has been evaluated, including likelihood of blockage and amount of expected holdup.

Catawba Response:
See responses to items 3(I)(1), 3(I)(2), and 3(I)(3) above.

3(m) Downstream effects - Components and Systems
The objective of the downstream effects, components and systems section is to evaluate the effects of debris carried downstream of the containment sump screen on the function of the ECCS and CSS in terms of potential wear of components and blockage of flow streams. Provide the information requested in GL 04-02 Requested Information Item 2.(d)(v) and 2.(d)(vi) regarding blockage, plugging, and wear at restrictions and close tolerance locations in the ECCS and CSS downstream of the sump.

GL 2004-02 Requested Information Item 2(d)(v)
The basis for concluding that inadequate core or containment cooling would not result due to debris blockage at flow restrictions in the ECCS and CSS flowpaths downstream of the sump screen, (e.g., a HPSI throttle valve, pump bearings and seals, fuel assembly inlet debris screen, or containment spray nozzles). The discussion should consider the adequacy of the sump screen's mesh spacing and state the basis for concluding that adverse gaps or breaches are not present on the screen surface.

GL 2004-02 Requested Information Item 2(d)(vi)
Verification that the close-tolerance subcomponents in pumps, valves and other ECCS and CSS components are not susceptible to plugging or excessive wear due to extended post-accident operation with debris-laden fluids.

General Response Note:

On December 20, 2007, the NRC issued a Safety Evaluation for WCAP-16406-P, Revision 1 "Evaluation of Downstream Sump Debris Effects in Support of GS-191", dated August 2007. Duke previously evaluated the downstream effects of sump debris on Catawba components and systems (as defined above) in accordance with WCAP-16406-P, Revision 0, dated June 2005. A comparative evaluation will be performed to address any differences extended by WCAP-16406-P, Revision 1 and the conclusions submitted to NRC by April 30, 2008 per NRC letter to Duke dated December 28, 2007. The responses and conclusions that follow, based on the original WCAP-16406-P, Revision 0 evaluation, are considered conservative and are not expected to change significantly since follow-on plant-specific testing modified the Catawba ECCS strainer design to further reduce the effect of downstream debris on components, systems, and fuel.

3(m)(1) If approved methods were used (e.g., WCAP-16406-P), briefly summarize the application of the methods. Indicate where the approved methods were not used or exceptions were taken, and summarize the evaluation of those areas.

Catawba Response:
An evaluation of the downstream effect (i.e., ECCS sump strainer debris bypass) of post-accident containment sump pool debris on the Catawba ECCS/CS systems was performed by Westinghouse. The evaluation considered the effect of debris ingested through the containment sump screen on the following components that are required to operate:

- ECCS and CSS Valves
- ECCS and CS Pumps
- RHR and CSS Heat Exchangers
- ECCS and CSS orifices
- CSS spray nozzles and RHR auxiliary spray nozzles
- Piping and instrumentation tubing

The evaluations, which included the Charging, Safety Injection, Residual Heat Removal, and Containment Spray Systems, are based on the methodology developed and documented in WCAP-16406-P, Revision 0, and consider the potential effect on the aforementioned components of erosion, abrasion, and the potential blockage of flow paths.

General Methodology Application Assumptions

- The evaluated Catawba ECCS sump strainer hole size is 1/8 inch (0.125 inches) for downstream debris effects. Thus, the debris size for hard objects is determined to be 0.125 inches, based on the methodology outlined in Section 5.5 and Appendix J of WCAP-16406-P, Revision 0. Deformable objects of up to two times the strainer hole size are assumed to pass through a strainer with this hole size, and are assumed to deform to pass through any downstream clearance equal to or larger than this evaluated sump strainer hole size.
- The installed Catawba ECCS sump strainer top-hat module hole size is 3/32 inch (0.09375 inches). The results of the downstream effects evaluations performed for the 0.125-inch hole size will be bounding for the smaller hole size. The valve plugging and erosive wear evaluations are performed assuming the installed 3/32 inch strainer top-hat module hole size.
- For Catawba, the ECCS mission time for ECCS/CS components is assumed to be 30 days or 720 hours, as described in Section 8 of WCAP-16406-P, Revision 0.

- The failure modes included in the pump evaluation are only those related to the pump itself (i.e., they do not include the motor, gearboxes, couplings, etc.), since the debris loading in the pumped fluid is assumed to only affect the internal components of the pump that are in contact with the pumped fluid.
- Maximum flow areas (minimum velocity) are used to determine if the velocity is high enough to prevent debris settling in the valve. This maximum area is based on the nominal valve size. Minimum flowrates (minimum velocity) through valves are used to determine if the velocity is high enough to prevent debris settling in the valve.

Debris Size Assumptions

- Fibrous debris and RMI particulate debris are assumed to deplete per the adjusted wear model presented in the Addenda to Appendix F of WCAP-16406-P, Revision 0.
- All other particulate debris and the failed coatings debris within the break ZOI are assumed to be less than 100 microns due to the characteristic sizes presented in the NRC SER of NEI 04-07, and as such will not deplete.
- Unqualified coatings in containment are assumed to fail in a size distribution with 94% of the unqualified coatings debris greater than 400 microns which will therefore deplete; 4.5% are less than 400 microns but greater than 100 microns, and 1.5% are less than or equal to 100 microns, and these smaller particulates will not deplete. The size of the unqualified coatings debris less than 100 microns is assumed to be 50 microns on average.

Erosive and Abrasive Wear Model Assumptions

- When applying the wear caused by the debris ingested through the ECCS sump strainer, design conditions are assumed for the equipment with the exception of the pumps, where normal wear is taken into account.
- Per WCAP-16406-P, Revision 0 methodology, the abrasive and erosive wear on pumps used for service during normal plant operation is assumed to not exceed 3 mils.
- Per WCAP-16406-P, Revision 0 methodology, a debris depletion factor (λ) of 0.07 hr^{-1} is assumed for both abrasive and erosive wear, which accounts for the depletion of the sump pool debris.
- The carbon steel hardness is conservatively used for the annealed steel hardness per WCAP-16406-P, Revision 0.
- Maximum ECCS flowrates and minimum flow areas (maximum velocity) through valves are used to determine the erosive wear rate due to debris in

the sump pool fluid. It is assumed that the maximum flow is based on the pump run-out flow.

- For the evaluation of wear on pumps, debris particles 50 microns and smaller are assumed to cause only erosive wear on the pump internals. The design running clearances in the ECCS/CS pumps typically range from 0.010 to 0.023 inches. The smallest clearance in these pumps is the radial gap, which is 0.005 inches (5 mils). Debris particles smaller than 50 microns are approximately 40% of this radial clearance and are therefore unlikely to cause abrasive wear.
- Debris particles greater than 50 microns are conservatively assumed to cause abrasive wear of the pump internals.

Methodology Exceptions

- The NRC SER of NEI 04-07 contains a requirement for licensees to assume that all coatings in containment fail as 10 micron diameter spherical particulates. Although this requirement is conservative when evaluating head loss across the ECCS sump strainer for which a "thin bed" effect is possible, it is not conservative when evaluating wear on components and valves.

- The Westinghouse wear evaluation of ECCS valves and components assumes an unqualified coating particulate size distribution that varies from 110% of the ECCS sump strainer (top-hat) opening to 10 microns. This assumption is reasonable and conservative when evaluating the impact of unqualified coatings particulate on component and valve wear. There is significant public domain documentation that shows that coatings outside the conditions defined in the break ZOI will tend to fail at sizes larger than their constituent pigment size.

3(m)(2) Provide a summary and conclusions of downstream evaluations.

Catawba Response:
The following conclusions and recommendations result from the downstream evaluation of the Catawba ECCS/CS components:

ECCS/CS Valves
Of the Catawba valves identified and evaluated as critical to operation following a LOCA in which the ECCS recirculation mode would be required, several have the potential for plugging (i.e., SI pump RCS Cold Leg and Hot Leg throttle valves, and the Charging pump RCS Cold Leg throttle valves). The installed strainer top-hat hole size of 0.09375 inches is not sufficient to preclude this concern, as the required strainer hole size would be 0.093 inches. This concern has been resolved through plant modifications that open these throttle valves to a sufficient

clearance, and also add new flow orifices to the affected lines to prevent SI pump and Charging pump run-out.

The ECCS/CS valves identified as being of potential concern for sedimentation were evaluated and a calculation of the flow velocity through these valves determined that sedimentation is not a concern.

The ECCS/CS valves were also evaluated for erosive wear. The SI/Charging system throttle valves that were identified as having insufficient clearance in the plugging evaluation were also adversely affected by the erosion evaluation. Consequently, the modifications that adjusted the valves to a sufficient clearance for the plugging concern also resolved the issues associated with valve erosion (Note: The Unit 1 modification is not complete. It will be completed during the Spring 2008 refueling outage.)

ECCS/CS Pumps
For the wear evaluation of the ECCS and CSS pumps during ECCS recirculation mode operation with containment sump debris-laden water, three aspects of pump operability are considered: hydraulic performance, mechanical performance (vibration), and mechanical shaft seal assembly performance. Results of the evaluation show no concerns in these areas.

The ECCS and CSS pumps have carbon/graphite backup seal bushings, which are vulnerable if exposed to the debris-laden sump pool fluid. The backup seal bushings are only required if failure of the primary pump seal is a concern. The primary pump seal is evaluated as unlikely to fail within the ECCS mission time, and since Catawba dose analyses credit the Engineered Safety Feature atmospheric filtration system located in the Auxiliary Building, there is no requirement to consider a pump seal failure. Thus, no change to the pumps is required.

ECCS/CS Heat Exchangers
The Catawba CSS/RHR heat exchanger tube plugging evaluation demonstrated that the tube inner diameter is larger than the anticipated debris particle size. Consequently, tube plugging will not occur. The heat exchanger wear evaluation demonstrated that, because the actual wall thickness minus the thickness lost to erosion is greater than the wall thickness required to retain system pressure, tube failure due to erosion will not occur per the discussion in Section 8.3 of WCAP-16406-P, Revision 0.

Plugging caused by debris settling and build-up was not considered in the evaluation since HX tube velocities are sufficiently high to preclude this concern.

ECCS/CS Orifices
The Catawba ECCS/CS orifice plugging evaluation demonstrated that no orifice bore size is smaller than the Catawba ECCS sump strainer hole size, therefore, plugging is not a concern.

The ECCS/CS orifice wear evaluation worst case result was for the Charging pump RCS Cold Leg injection orifices; the system flow increase through any of these orifices was less than the acceptance criterion. Therefore, erosive wear of ECCS/CS orifices is not a concern.

ECCS/CS Nozzles
The Catawba CSS/RHR auxiliary spray nozzle plugging evaluation demonstrated that the bore diameter is larger than the anticipated debris particle size. Consequently, plugging will not occur. For the spray nozzle wear evaluation, the increase in spray nozzle flow rate due to an increased orifice diameter remains below the acceptance limit specified in WCAP-16406-P, Revision 0, so nozzle wear is not a concern.

ECCS/CS Instrument Lines
The Catawba ECCS/CS instrumentation tubing evaluation demonstrated that the transverse recirculation flow velocities for instrumentation locations in the ECCS and the CSS are greater than 2.94 feet per second, which is above the acceptance criterion specified in WCAP-16406-P, Revision 0. Consequently, failure of the ECCS/CS instrumentation due to debris settlement does not occur.

3(m)(3) Provide a summary of design or operational changes made as a result of downstream evaluations.

Catawba Response:
As noted in item 3(m)(2) above, modification of the Catawba Unit 1 and 2 Charging and Safety Injection line flow orifices, along with an adjustment to the associated throttle valve clearances, was required to resolve throttle valve plugging and erosion concerns identified by the downstream debris effects evaluations. These modifications are also identified in Section 3(j) of Enclosure 2.

The results of the Catawba downstream debris effects evaluations on the critical ECCS/CS components demonstrate that the evaluated and modified components are acceptable for the expected ECCS mission time. No further design or operational changes are required.

3(n) Downstream Effects - Fuel and Vessel

The objective of the downstream effects, fuel and vessel section is to evaluate the effects that debris carried downstream of the containment sump screen and into the reactor vessel has on core cooling.

General Response Notes:

- *On December 20, 2007, the NRC issued a Safety Evaluation for WCAP-16406-P, Revision 1 "Evaluation of Downstream Sump Debris Effects in Support of GS-191", dated August 2007. Duke previously evaluated the downstream effects of sump debris on the Catawba reactor vessel internals and nuclear fuel in accordance with WCAP-16406-P, Revision 0, dated June 2005. A comparative evaluation will be performed to address any differences extended by WCAP-16406-P, Revision 1 and the conclusions submitted to NRC by April 30, 2008 per NRC letter to Duke dated December 28, 2007. The responses and conclusions that follow, some based on the original WCAP-16406-P, Revision 0 evaluation, are considered conservative and are not expected to change significantly since follow-on plant-specific testing modified the Catawba ECCS strainer design to further reduce the effect of downstream debris on the reactor vessel internals and nuclear fuel.*

- *On November 21, 2007, the NRC issued a revision to the "Content Guide for Generic Letter 2004-02 Supplemental Responses", wherein the reference to WCAP-16793 in Section 3(n) was footnoted. The footnote indicated that staff evaluation guidance (in the form of a draft SER) was expected to be available to Licensees in December 2007. As this draft guidance has not yet been issued, Duke will address the issues in this Section based on the in-vessel debris evaluations performed, with a comparison to the original WCAP-16793-NP methodology.*

3(n)(1) Show that the in-vessel effects evaluation is consistent with, or bounded by, the industry generic guidance (WCAP-16793), as modified by NRC staff comments on that document. Briefly summarize the application of the methods. Indicate where the WCAP methods were not used or exceptions were taken, and summarize the evaluation of those areas.

Catawba Response:
As identified in Section 3(m), an evaluation of the downstream effects (i.e., ECCS sump strainer debris bypass) of post-accident containment sump pool debris on the Catawba ECCS/CS systems was performed by Westinghouse. The evaluation considered the effect of debris ingested through the containment

sump screen on ECCS/CS components that are required to operate in the ECCS recirculation mode.

The evaluations, which are based on the methodology developed and documented in WCAP-16406-P, Revision 0, also consider the potential effects of downstream debris-laden sump pool fluid on the flow paths through the reactor vessel internals and the nuclear fuel.

A summary of the assumptions used in the application of the WCAP-16406-P, Revision 0 methodology for the evaluation, and the exceptions taken to this methodology, are located in Section 3(m) of Enclosure 2.

The results of the Westinghouse evaluation of the Catawba reactor vessel internals, described following, reflect the methodology described in WCAP-16406-P, Revision 0.

Reactor Vessel Internals
The smallest flow clearance found in the Catawba reactor vessel internals evaluation is 2.24 inches. The installed Catawba ECCS sump strainer top-hat modules, with 0.09375 inch holes, thus will prevent plugging by either deformable or non-deformable debris.

Additionally, low flows in the lower reactor vessel plenum, combined with the fact that the Reactor Vessel Level Indication System (RVLIS) impulse lines are dead-ended, will prevent both the entry of debris into the RVLIS connection and the collection of debris that might affect the differential pressure transmitters, per WCAP-16406-P, Revision 0 methodology. Therefore, debris ingested through the ECCS sump strainer and settling in the lower plenum of the reactor vessel will not affect RVLIS water level measurements.

A separate, plant-specific debris bypass evaluation of the Catawba modified ECCS sump strainer design including the top-hat modules (with the Debris Eliminator feature), was performed to determine the size and quantity of fiber debris that might bypass the strainer and enter the nuclear fuel assemblies.

Nuclear Fuel Assemblies

Westinghouse preliminarily evaluated the quantity of fiber that might reach the nuclear fuel assemblies during containment sump recirculation. According to this evaluation, if the fiber size and quantity reaching the top or bottom of the Catawba nuclear reactor core is sufficient to develop a fiber bed with a thickness of 1/8-inch, this thin fibrous debris bed could filter out particulate debris that bypasses through the ECCS containment sump strainer and result in a debris bed with very low porosity. The low porosity through the debris bed would reduce or potentially block the flow passing through the fuel assemblies (i.e., the thin bed effect). This phenomenon is also discussed in the NRC SER of NEI 04-

07 . A fiber bed of 1/8-inch is utilized in the evaluation because thinner fiber beds will not provide the required structure to bridge over the passageways at the bottom and top of the nuclear fuel assemblies.

Catawba's ECCS strainer top-hat design includes a Debris Bypass Eliminator feature, designed to reduce both the fibrous debris size and quantity that could potentially enter the core downstream of the sump strainer. The preliminary Westinghouse evaluation of debris bypassing the strainer and reaching the nuclear fuel was performed prior to the use of the Debris Bypass Eliminator. The effectiveness of the Debris Bypass Eliminator feature was tested using Nukon® fiber insulation, at various flowrates and fiber/particulate debris bed mixtures consistent with the appropriate Catawba debris transport evaluation.

ECCS Sump Strainer Fiber Bypass Evaluation Method
The potential exists for small gaps/openings between the top-hat modules and plenums as well as other locations, which might allow bypass of fibrous material. Before determining the quantity of fiber that will pass through the gaps/openings within the Catawba sump strainer plenums, the surface area of these gaps/openings is determined. Using this surface area and the test data from NRC-sponsored bypass testing (as documented in the Los Alamos Screen Penetration Test Report LA-UR-04-5416), the quantity of fiber passing through the gaps/openings is determined.

Additionally, the particulate/fibrous debris bypass through a strainer top-hat module equipped with the Debris Bypass Eliminator was independently assessed and measured in a flume test, including a resulting debris characteristic evaluation.

Using both the tested fibrous debris bypass through the gaps/openings within the sump strainer plenums, and the tested debris bypass through the strainer top-hat modules, the potential for blockage of the nuclear fuel assemblies during containment sump recirculation is evaluated.

Bypass Evaluation Assumptions

- It is conservatively assumed that the all of the gaps between the sealing plates and the plenums, as well as the clearance between the top-hats and the plenums, are equal to the 1/16-inch clearance as specified on the design drawings. The clearance specified is the maximum allowable clearance. Most of the connected components will have little or no clearance between them. All connections are bolted lap joint configurations. This requires two right angle flow direction changes to allow a fiber to pass through a potential gap, thus increasing the likelihood of the fiber being trapped within the gap.
- The Nukon® and Thermal-Wrap® fiber insulation installed on the piping within the Catawba containment has a density of 2.4 lb/ft^3. It is

conservatively assumed that the density of the fiber when reaching the top or bottom of the reactor core is unchanged. Typically, Nukon® and Thermal-Wrap® fibrous insulation compresses to a greater density when it builds a debris bed mixed with particulates.

- Further assumptions regarding debris transport are detailed in the response to RAI #1 of Enclosure 1, and in Section 3(e) of Enclosure 2.

Bypass Evaluation Results Summary
The quantity and length of the fibers passing through the Catawba top-hat strainer modules with the Debris Bypass Eliminator feature was measured. Based on these measurements, the majority of the fiber bypass (over 98%) through the debris bypass eliminator will not build a fiber bed below or above the nuclear reactor core due to the short length of the fibers.

The quantity of fiber passing through various 1/16-inch gaps and 3/32-inch openings within the modified ECCS sump strainer design for Catawba Units 1 and 2 was conservatively determined. The total quantity of fiber that could bypass through these gaps/openings is not sufficient to develop a thin bed of debris with a thickness of 1/8-inch at the top or bottom of the nuclear reactor core. The total amount of fiber bypassed cannot provide the required structure to bridge over the passageways at the bottom and top of the nuclear fuel assemblies. Therefore, per this evaluation, sufficient open flow paths will exist for cooling of the nuclear fuel assemblies.

WCAP-16793-NP

WCAP-16793-NP, "Evaluation of Long-Term Cooling Considering Particulate and Chemical Debris in the Recirculating Fluid," Revision 0, dated May 2007, provides analyses for assessing the effects of fibrous, particulate, and chemical debris on nuclear fuel assemblies.

The existing guidance provided to the industry is used in WCAP-16793-NP to provide the framework for the analyses that further address these concerns. Existing guidance incorporated in WCAP-16793-NP:

- WCAP-16406-P: Section 9.0 (cold leg injection, hot leg injection, fiber, particulates, etc.), including Addenda
- NEI 04-07, Volume 1: Section 7.3
- NEI 04-07, Volume 2: Section 7.3
- Draft NRC Staff Review Guidance for "Evaluation of Downstream Effects of Debris Ingress into the PWR RCS on Long Term Core Cooling Following a LOCA", dated November 22, 2005.

While the guidance in these documents provides information regarding how to assess the effects of debris on fuel, the application of these methods is stated in WCAP-16793-NP as being significantly conservative. In particular, the following conservative assumptions in the existing guidance are identified:

- All debris that penetrates the sump strainer reaches the core. Further, all fibrous debris is neutrally buoyant and is long enough to be captured at the core inlet.
- The formation of a thin bed (i.e., a bed of fiber 1/8-inch thick) at the core inlet is sufficient to preclude flow to the core based on the results presented in NUREG/CR-6224.

The WCAP then describes various evaluations and tests performed to determine the likelihood that bypass debris will adversely affect nuclear fuel assemblies, including a debris characteristics evaluation of industry-representative fibers and particulates.

Summarizing these tests and evaluations, reasonable assurance of long-term core cooling for all plants is demonstrated in WCAP-16793-NP by the following:

1. The size of holes in replacement sump strainer designs limits the size of debris that is passed through the strainer during operation of the ECCS in the recirculation mode.
2. Based on test observations, the characteristic dimension of this debris is typically less than the strainer hole size, even for fibrous debris. Consequently, debris buildup at critical locations in the reactor vessel and core is not expected.
3. Based on data presented internationally during the resolution of the BWR strainer performance concerns, fibrous debris was observed to not strongly adhere to fuel cladding. Thus, the small size of the debris and its tendency to not adhere to fuel indicates that long-term core cooling of the fuel will not be impaired by either the collection of fibrous and particulate debris in fuel elements, or by the collection of fibrous debris on fuel cladding surfaces.
4. Supporting calculations have demonstrated long-term core cooling will be maintained with about 99.4% of the core blocked. The cladding temperature response to blockage at grids and the collection of precipitation on clad surfaces was also demonstrated to be acceptable with resulting cladding temperatures less than 400°F.

The Catawba plant-specific nuclear fuel assembly debris evaluation is performed via testing and analyses that incorporate the previously available industry guidance and conservatisms. Using these techniques and

acceptance criteria the Catawba modified ECCS sump strainer is shown to be capable of preventing an adverse build-up of fibrous debris on the core. Additionally, the debris characteristics evaluation of the fibers deposited downstream of the Catawba ECCS sump strainer indicates that the downstream WCAP-16793-NP debris characteristics are more limiting in size.

As such, the plant-specific fibrous debris bypass evaluations performed for Catawba are bounded by the evaluations described by WCAP-16793-NP.

Duke is aware that NRC is still evaluating the industry guidance provided by WCAP-16793-NP, and will monitor the status of this evaluation. Based on the results of the Duke-specific downstream fiber and particulate debris effects evaluations performed, significant changes to the preceding assessment of the Catawba ECCS sump strainer are not expected.

The assessment of downstream chemical effects on the nuclear fuel assemblies is also described by WCAP-16793-NP analysis methodology. This issue is addressed for Catawba in Section 3(o) of Enclosure 2.

3(o) Chemical Effects
The objective of the chemical effects section is to evaluate the effect that chemical precipitates have on head loss and core cooling.

General Response Note:
On November 21, 2007, the NRC issued a revision to the "Content Guide for Generic Letter 2004-02 Supplemental Responses", wherein the reference to both WCAP-16530-P and WCAP-16793 were footnoted. The footnotes indicated that staff evaluation guidance for these two documents (in the form of draft SERs) was expected to be available to Licensees in November and December 2007. At this time, only the draft SER for WCAP-16530-P has been issued. In it, NRC identified that WCAP-16793-NP, which specifically addresses the chemical effects concerns in Section 3(o), was still under review.

Duke will address the long-term core cooling issues identified in this Section based on the in-vessel chemical effects evaluation performed using the WCAP-16793-NP methodology issued in May 2007.

3(o)(1) Provide a summary of evaluation results that show that chemical precipitates formed in the post-LOCA containment environment, either by themselves or combined with debris, do not deposit at the sump screen to the extent that an unacceptable head loss results, or deposit downstream of the sump screen to the extent that long-term core cooling is unacceptably impeded.

Catawba Response:
Chemical Deposition at the ECCS Sump Strainer
Benchtop and Vertical Loop Test chemical effects testing performed by Duke is discussed in detail in the response to RAI #10 of Enclosure 1. Further chemical effects testing via the Integrated Prototype Test (IPT), designed to quantify the consequence of chemicals in the Catawba containment sump pool on the ECCS sump strainer debris bed head loss, is discussed in detail in the response to RAI #11 of Enclosure 1. The results of the IPT are being finalized and will be submitted with the concluding response to RAI #12 of Enclosure 1. This is a commitment identified in Duke letter dated December 7, 2007, "Request for Extension of Completion Dates for Catawba Units 1 and 2 Corrective Actions Required by NRC Generic Letter (GL) 2004-02". Duke expects to have this documentation, and to supplement the response to RAI #12, by April 30, 2008.

Chemical Deposition Downstream of the ECCS Sump Strainer
The chemical reactions of most concern for core deposition are those that release material into solution in a form where it can bypass the ECCS sump

strainer, collect in the reactor vessel, and precipitate on heated fuel cladding surfaces. The chemical reactions leading to the generation of such transportable material follow:

- Corrosion or dissolution of system materials to directly produce a hydrous corrosion product that does not settle.
- Corrosion or dissolution of system materials to produce dissolved material that later forms precipitates on the fuel due to temperature change and/or pH change.
- Corrosion or dissolution of system materials followed by chemical reactions with other coolant chemicals to produce hydrous precipitates that do not settle.

Corrosion or dissolution of system materials is a first step that is common to all of the reactions. The assessment of precipitation or deposition reactions within the post-LOCA environment must be able to estimate the dissolution behavior of containment materials.

Westinghouse previously developed a method for predicting post-LOCA chemical reactions and the formation of material that could affect ECCS sump strainers in WCAP-16530-NP. This methodology has been reviewed by the NRC, and Catawba utilized it as a basis for demonstrating adequate ECCS sump strainer performance in the Integrated Prototype Test (IPT) for chemical effects described in the responses to RAI #10 and RAI #11 of Enclosure 1.

Recent NRC concerns related to post-LOCA chemical reactions have focused on the core. Specifically, the NRC identified that they expected the following chemical effects concerns be addressed:

- Assessment of chemical concentration effects due to long-term boiling
- Consideration of plate-out of deposits on the fuel rods
- Estimated effect of deposits on core heat transfer

The LOCA Deposition Analysis Model (LOCADM), described in WCAP-16793-NP, was developed to enable all plants, regardless of NSSS vendor (Westinghouse, CE or B&W) to address these concerns when documenting the viability of long-term core cooling.

WCAP-16793-NP Assumptions
The deposition method makes several assumptions that are conservative and, as a result, the predictions of deposit thickness and fuel surface temperature are considered to be bounding rather than best-estimate.

1. Once formed, deposits will not be thinned by flow attrition or by dissolution.
2. No deposition takes place apart from the fuel heat transfer surfaces. A best-estimate approach would have accounted for deposition on non-fuel surfaces such as the RHR heat exchangers and surfaces in containment, resulting in thinner core deposits.
3. The mass balance approach for determining material transport around the ECCS does not take into account any moisture carryover in the steam exiting the reactor vessel. Experimental measurements simulating the post-LOCA environment indicate that concentration of non-volatile material within the reactor vessel will be considerably reduced if moisture carryover is included in the estimation. Not including boron and coolant impurities in the moisture carryover is conservative.
4. The effect of boiling point elevation due to the concentration of solutes is not currently modeled. This simplification will result in an over-prediction of boiling in the core and thus any error introduced by the simplification will be in the conservative direction.
5. Only species that have dissolved into solution or species that have dissolved and then precipitated into suspended particles are considered. The transport of large debris particles from containment and re-deposition of debris from fuel failures have not been included. Larger debris will either settle or will be physically retained by the ECCS sump strainer, the fuel assembly inlet debris filters, or in other locations where flow is restricted. This mode of blockage is addressed in Section 3(f), Section 3(m), and Section 3(n) of Enclosure 2.
6. All impurities transported into a deposit by boiling will be deposited at a rate that is equal to the product of the steaming rate and the coolant impurity concentration.
7. The non-boiling rate of deposit build-up is proportional to heat flux and is 1/80th of that of boiling deposition at the same heat flux. This ratio is based on empirical data for mixed calcium salts under boiling and non-boiling conditions.
8. The deposition of impurities on the fuel clad surface is assumed to be distributed according to the core power distribution.

WCAP-16793-NP Evaluation Results

Evaluation of chemical effects in the core region to form precipitation on the cladding surface was performed. Considering the variation in plant-specific chemistries, this evaluation was performed by extending the method of WCAP-16530-NP to estimate the potential for plate-out on the surface of fuel cladding.

This method is available for all Westinghouse, CE and B&W plants to perform plant-specific evaluations in which their plant-specific chemistry is accounted for.

Sample calculations were performed using particularly challenging plant chemistries, and fuel clad temperatures were predicted to remain below 400°F over a 30-day period following the postulated event. Due to the interaction of several of the parameters, WCAP-16793-NP suggests that plants perform a plant-specific evaluation by comparison to these sample calculations to confirm that chemical plate-out on the fuel does not result in the prediction of fuel cladding temperatures approaching the 800°F acceptance basis value.

Comparison to the sample calculations presented in WCAP-16793-NP shows that the predicted Catawba post-LOCA conditions and chemistry parameters are bounded by the WCAP analyses, and therefore the long-term cooling capability of the Catawba nuclear core is not impeded by downstream chemical effects.

WCAP-16793-NP and Boric Acid Precipitation
The effect of sump debris and sump chemical compounds on boric acid precipitation has been reviewed with respect to displaced liquid volume, the potential impact on assumed mixing volumes, alternate flow paths, and chemical effects as it pertains to potential precipitates in the core. It is concluded that sump debris and related chemical effects do not create a boric acid precipitation concern and that the introduction of debris to the RCS does not significantly affect the current licensing basis boric acid precipitation calculations. Therefore, the current accepted licensing calculations that demonstrate appropriate boric acid dilution to preclude boric acid precipitation remain valid.

3(o)(2) Content guidance for chemical effects is provided in Enclosure 3 to a letter from the NRC to NEI dated September 27, 2007 (ADAMS Accession No. ML0726007425).

Catawba Response:
Enclosure 3 to the letter from NRC to NEI dated September 27, 2007 ("Evaluation Guidance for the Review of GSI-191 Plant-Specific Chemical Effect Evaluations"--ADAMS Accession No. ML072600372) is draft guidance for the staff (and licensees) to ensure the chemical effects portions of Generic Letter 2004-02 plant-specific evaluations appropriately address the chemical effects that can occur following a postulated loss of coolant accident (LOCA). This guidance invokes industry testing methodology and observations of industry testing to facilitate the process of assessing potential concerns, formulating plans of testing, conducting tests, and evaluating test results.

As noted previously, Duke's strategy for addressing chemical effects on the Catawba modified ECCS sump strainer are addressed in the responses to RAI

#10 and RAI #11 of Enclosure 1, which describe the preliminary and plant-specific chemical effects testing (Integrated Prototype Test) performed and the industry-related bases for the development of the tests.

3(p) Licensing Basis
The objective of the licensing basis section is to provide information regarding any changes to the plant licensing basis due to the sump evaluation or plant modifications. Provide the information requested in GL 04-02 Requested Information Item 2.(e) regarding changes to the plant licensing basis. The effective date for changes to the licensing basis should be specified. This date should correspond to that specified in the 10 CFR 50.59 evaluation for the change to the licensing basis.

GL 2004-02 Requested Information Item 2(e)
A general description of and planned schedule for any changes to the plant licensing bases resulting from any analysis or plant modifications made to ensure compliance with the regulatory requirements listed in the Applicable Regulatory Requirements section of this generic letter. Any licensing actions or exemption requests needed to support changes to the plant licensing basis should be included.

Catawba Response:
The discussion of the Catawba licensing basis requested in Section 3(p) is provided in Section 1 of Enclosure 2, Overall Compliance.