Omaha Public Power District

444 South 16th Street Mall
Omaha NE 68102-2247

LIC-08-0021
February 29, 2008

U. S. Nuclear Regulatory Commission
ATTN: Document Control Desk
11555 Rockville Pike
Rockville, MD 20852

References: See Page 4

SUBJECT: Supplemental Response to Generic Letter 2004-02, "Potential Impact of Debris Blockage on Emergency Recirculation during Design Basis Accidents at Pressurized-Water Reactors"

The Omaha Public Power District (OPPD) provides the enclosed supplemental response to Generic Letter (GL) 2004-02, "Potential Impact of Debris Blockage on U. S. Nuclear Regulatory Commission Emergency Recirculation during Design Basis Accidents at Pressurized-Water Reactors" (Reference 2).

Reference 2 requested that addressees perform an evaluation of the emergency core cooling system (ECCS) and containment spray system (CSS) recirculation functions in light of the information provided in GL 2004-02, and, if appropriate, take additional actions to ensure system function. OPPD provided initial and follow-up responses and various extension requests to GL 2004-02 in References 3, 4, 5, and 7. The NRC approved the extension request in Reference 8. This supplemental response to GL 2004-02 was prepared and formatted using the NRC guidance provided to NEI in Reference 10. Section 4 of the enclosure provides OPPD's response to the NRC request for additional information (RAI) of Reference 6.

Fort Calhoun Station (FCS) was a pilot plant for resolution of Generic Safety Issue (GSI) 191, "Assessment of Debris Accumulation on PWR Sump Performance." Hence, selective portions of testing and analyses have been witnessed and reviewed by the NRC staff and presented for NRC review at NRC public meetings. This includes meetings with the NRC staff regarding impact of the no-spray configuration on the radiological consequences and containment systems (i.e., water management initiative strategies). OPPD has employed comprehensive testing of the strainer configurations, testing for identification of debris characteristics, and some selective erosion testing. OPPD has taken an aggressive approach to ensure acceptable ECCS performance in the recirculation mode.

A116
NRR

As part of the water management initiative strategies, a license amendment request (LAR) was submitted to the NRC in Reference 9 requesting NRC approval of a change in the containment spray (CS) actuation logic, which will eliminate CS initiation for containment pressure mitigation during a loss-of-coolant accident (LOCA).

Compliance with GL 2004-02 will be achieved through analysis, plant specific testing, installation of new sump strainers, NRC approval of the Reference 9 LAR and its implementation during the 2008 refueling outage (RFO), plant modifications reducing sources of debris, and programmatic and process changes to ensure continued compliance.

OPPD will be in compliance with the regulatory requirements listed in the Applicable Regulatory Requirements section of GL 2004-02 upon completion of the 2008 RFO currently scheduled for May 24, 2008. The schedule for completion of activities related to GL 2004-02 compliance was approved by the NRC in Reference 8.

The regulatory commitments delineated in References 4 and 5 are complete. The remaining actions to complete closeout of GL 2004-02 are regulatory commitments (AR 35967) as follows:

Actions Remaining

Action	Due Date/Event
Confirm if existing cyclone separators are acceptable or replace as needed	Prior to startup from 2008 RFO.
Enhance Standing Order O-25, "Temporary Modification Control" regarding configuration control of insulation in containment	Prior to startup from 2008 RFO
Evaluate the final conditions issued by the NRC in regards to WCAP-16793-NP and provide a formal response	Within 90 days of completion of 2008 RFO or within 90 days of issuance of final NRC SER whichever is later
Validate flashing evaluation utilizing NRC Safety Evaluation for LAR-07-04	Within 90 days of completion of 2008 RFO
Validate strainer head loss test results and obtain final report from vendor	Within 90 days of completion of 2008 RFO
Provide GL 2004-02 close-out letter	Within 90 days of completion of 2008 RFO

If you should have additional questions, please contact Mr. Thomas C. Matthews at 402-533-6938.

I declare under penalty of perjury that the foregoing is true and correct. (Executed on February 29, 2008.)

Richard P. Clemens
Division Manager
Nuclear Engineering

RPC/MLE/mle

Enclosure: Supplemental Response to GL 2004-02

c: E. E. Collins, NRC Regional Administrator, Region IV
M. T. Markley, NRC Senior Project Manager
J. D. Hanna, NRC Senior Resident Inspector

Reference List

1. Docket No. 50-285
2. Letter from NRC (B. A. Boger), "NRC Generic Letter 2004-02: Potential Impact of Debris Blockage on Emergency Recirculation during Design basis Accidents at Pressurized-Water Reactors," dated September 13, 2004 (NRC-04-0115) (ML042360586)
3. Letter from OPPD (R. L. Phelps) to NRC (Document Control Desk), 90-Day Response to Generic Letter 2004-02, Potential Impact of Debris Blockage on Emergency Recirculation during Design basis Accidents at Pressurized-Water Reactors," dated March 4, 2005 (LIC-05-0017) (ML050630538)
4. Letter from OPPD (H. J. Faulhaber) to NRC (Document Control Desk), "Follow-up Response to Generic Letter 2004-02, Potential Impact of Debris Blockage on Emergency Recirculation during Design basis Accidents at Pressurized-Water Reactors," dated August 31, 2005 (LIC-05-0101) (ML053070109)
5. Letter from OPPD (H. J. Faulhaber) to NRC (Document Control Desk), "Request for Extension to the Completion Date for Corrective Actions Taken in Response to Generic Letter 2004-002, Potential Impact of Debris Blockage on Emergency Recirculation during Design basis Accidents at Pressurized-Water Reactors and Information Regarding Actions Taken as a Result of Information Notice 2005-26," dated November 18, 2005 (LIC-05-0131)
6. Letter from NRC (A. B. Wang) to OPPD (R. T. Ridenoure), "Fort Calhoun Station, Unit 1, Request for Additional Information Re: Response to Generic Letter 2004-02, Potential Impact of Debris Blockage on Emergency Recirculation during Design basis Accidents at Pressurized-Water Reactors," (TAC No. MC 4686) dated February 9, 2006 (NRC-06-0016)
7. Letter from OPPD (H. J. Faulhaber) to NRC (Document Control Desk), "Revised Request for an extension to the Completion Date for Corrective Actions Taken in Response to Generic Letter 2004-02," dated June 9, 2006 (LIC-06-0067)
8. Letter from NRC (C. Haney) to OPPD (R. T. Ridenoure), "Fort Calhoun Station, Unit No. 1 - Generic Letter 2004-02 Extension Request Approval (TAC No. MD2323)," dated August 14, 2006 (NRC-06-0103)
9. Letter from OPPD (D. J. Bannister) to NRC (Document Control Desk), "Fort Calhoun Station Unit No. 1 License Amendment Request (LAR), Modification of the Containment Spray System Actuation Logic," dated July 30, 2007 (LIC-07-0052)
10. Letter from NRC (W. H. Ruland) to NEI (A. Pietrangelo), Revised Content Guide fro Generic Letter 2004-02 Supplemental Responses," dated November 21, 2007

Omaha Public Power District
Supplemental Response to Generic Letter 2004-02
for Fort Calhoun Station, Unit No. 1

1. Overall Compliance

Fort Calhoun Station (FCS) will be in compliance with the regulatory requirements listed in the Applicable Regulatory Requirements section of Generic Letter (GL) 2004-02 upon completion of the upcoming refueling outage (RFO) currently scheduled for May 24, 2008.

The Applicable Regulatory Requirements section of NRC Generic Letter (GL) 2004-02 states:

NRC regulations in Title 10, of the Code of Federal Regulations Section 50.46, 10 CFR 50.46, require that the ECCS have the capability to provide long term cooling of the reactor core following a LOCA. That is, the ECCS must be able to remove decay heat, so that the core temperature is maintained at an acceptably low value for the extended period of time required by the long lived radioactivity remaining in the core.

Similarly, for PWRs licensed to the General Design Criteria (GDCs) in Appendix A to 10 CFR Part 50, GDC 38 provides requirements for containment heat removal systems, and GDC 41 provides requirements for containment atmosphere cleanup. Many PWR licensees credit a CSS, at least in part, with performing the safety functions to satisfy these requirements, and PWRs that are not licensed to the GDCs may similarly credit a CSS to satisfy licensing basis requirements. In addition, PWR licensees may credit a CSS with reducing the accident source term to meet the limits of 10 CFR Part 100 or 10CFR50.67. GDC 35 is listed in 10CFR50.46(d) and specifies additional ECCS requirements. PWRs that are not licensed to the GDCs typically have similar requirements in their licensing basis.

Exceptions to the applicable regulatory requirements of GL 2004-02 for FCS are as follows:

The Omaha Public Power District (OPPD) License Amendment Request (LAR) 07-04 (Reference 16) was submitted to the NRC for approval of a change in the containment spray system (CSS) actuation logic, which will eliminate automatic containment spray initiation for a loss-of-coolant accident (LOCA). Following NRC approval, FCS will longer credit the CSS for heat removal capacity or for iodine removal post-LOCA. The CSS will continue to actuate during a main steam line break (MSLB), which does not require use of safety injection pumps in the recirculation mode. Compliance with the regulatory requirements of GL 2004-02 is based on NRC approval of the LAR by April 1, 2008, so that the proposed changes can be implemented during the 2008 RFO.

Compliance will be achieved through analysis, plant specific testing, larger sump strainers installed in 2006, implementation of LAR-07-04 removing containment spray (CS) for containment pressure mitigation during a LOCA as part of water management initiative strategies, completed plant modifications that reduce debris, and associated programmatic and process changes to ensure continued compliance.

The analysis methodology used for demonstrating compliance is that described in NEI 04-07, Volume 1, (Reference 48) and NEI 04-07, Volume 2, (Reference 49). Exceptions to the methodology in NEI 04-07 are discussed in Section 3. Compliance with the regulatory requirements of GL 2004-02 is not based on the alternate evaluation methodology in Section 6 of NEI 04-07.

FCS was a pilot plant for GSI 191 resolution and hence selective portions of testing and analyses have been witnessed and reviewed by the NRC staff and presented for NRC review at NRC public meetings. This includes meetings with the staff in regards to impact of the no-spray configuration on the radiological consequences and containment systems. OPPD has employed comprehensive testing of the strainer configurations, testing for identification of debris characteristics, and some selective erosion testing. OPPD has taken an aggressive approach to ensure acceptable ECCS performance in the recirculation mode.

The major physical changes undertaken by OPPD at FCS are:

- Two new sump strainers with more than 15 times the area of the original sump screens were installed during the 2006 RFO.
- During the 2006 RFO, a significant amount of fibrous insulation was replaced with reflective metallic insulation (RMI) during the steam generator (SG), pressurizer (PZR), and reactor pressure vessel (RPV) head replacement projects.
- Trisodium phosphate (TSP), the previous containment sump buffer was replaced with sodium tetraborate (NaTB) to reduce formation of chemical precipitates.
- A no-spray configuration, which significantly reduces debris transport and lowers flow rates through the sump strainer screens, will be implemented during the 2008 RFO. This also allows a longer core injection period prior to recirculation, and a reduction in material transported to the sump strainers.

General Electric (GE) engineered the new sump strainer assemblies. Each configuration is a passive safety related strainer assembly further described in detail in Section 3.j. The strainer assembly is located outside the bioshield walls and is not subject to pipe whip, jet impingement, or missile impacts. The entire assembly including welds, has been analyzed for limiting combinations of dead, live, thermal, hydrodynamic and design basis earthquake loads.

The following discussions summarize the OPPD analyses, tests, and controls that ensure FCS complies with the design and licensing requirements of GL 2004-02.

There are inherent conservatisms in the NEI 04-07 methodology, regarding the spherical destruction of debris from any pipe break. In order to minimize uncertainties in the generation and transport analyses, OPPD participated in jet impingement testing of both banded insulation and qualified paint coatings. OPPD also conducted erosion testing on Cal-Sil materials in a flume facility. OPPD performed flume testing to validate

computational fluid dynamics (CFD) calculations for transport in low flow regimes as part of NRC interactions.

The breaks that yielded the greatest amount of debris that could challenge sump performance, were the breaks that generated the greatest amount of Cal-Sil and fibrous debris. The OPPD debris generation analysis utilized the zone of influence (ZOI) refinement discussed in Section 4.2.2.1.1 of NEI 04-07, Volumes 1 and 2 (References 48 and 49), which allows the use of debris specific spherical ZOIs. Using this approach, the amount of debris generated within each ZOI was calculated and the individual contributions from each debris type were summed to derive the total debris source term for particulate and fibrous debris types.

The methodology for transport analysis was based upon NEI 04-07 guidance using analysis modified by the refined methods described in Appendices III, IV, and VI of NEI 04-07, Volume 2. This approach was audited in a pilot plant audit by the NRC and subsequent improvements were implemented based on the audit findings. The specific effects of four modes of transport were addressed. Logic trees were developed for each type of debris. Along with analytical approaches, flume testing was also performed to validate low flow conditions for a no-spray configuration. The flume testing performed with ultrasonic transducers validated the CFD analytical methods and approach for low flow regimes. As part of transport and material characteristics, erosion testing on Cal-Sil materials was conducted in a flume facility to understand the long-term potential for Cal-Sil erosion.

Sump strainer head loss was determined through testing methods. The NRC witnessed the initial testing performed in 2005. Subsequent improvements to debris preparation and testing methodology were employed to ensure that a conservative design basis head loss would be determined. The test protocol was discussed with the NRC prior to testing in 2007 and the NRC again witnessed the test in early 2008. No changes to the protocol were necessary as a result of these discussions and observations.

Detailed discussions in regards to strainer testing are provided in Section 3.f.

Chemical precipitates were calculated using the methodology in WCAP-16530-NP, Revision 0, "Evaluations of Post-Accident Chemical Effects in Containment Sump Fluids to Support GSI-191," (Reference 23). OPPD has utilized additional inputs discussed in WCAP-16785-NP, "Evaluation of Additional Inputs to the WCAP-16530-NP Chemical Model," (Reference 24). OPPD credited models outlined in Reference 24 for silicate inhibition of aluminum corrosion, and aluminum solubility at elevated temperatures.

Detailed strainer test discussions are provided in Section 3.f and include information in regards to thin bed testing, and coatings debris.

OPPD has performed extensive strainer head loss testing to identify the most conservative debris mix and conducted repeatability testing to ensure that the head loss

will be lower than the available net positive suction head (NPSH). The results of testing demonstrate that the FCS strainer design is capable of operating under both LBLOCA and SBLOCA scenarios without generating a vortex, which would result in the entrainment of air into the strainers and the emergency core cooling system (ECCS).

The revised containment spray configuration will maintain post-LOCA core injection and required flow through the containment sump strainer while minimizing the bulk containment sump pool debris transport.

For NPSH margin calculations refer to detailed assessments provided in Section 3.g.

Programs are in place to control insulation and coatings inside containment. Controls include inspections of containment coatings each RFO and assessment and engineering evaluation prior to changeout or removal of insulation. Configuration control checklists exist (See OPPD response to 3i) that require prior evaluation of any changes to the amount of aluminum in containment.

FCS has undergone extensive containment cleaning programs since 2003 including the major component replacement projects (SG, PZR and RPV head) of the 2006 RFO. Containment closeout and foreign material exclusion programs ensure that debris is monitored or controlled within design limits.

In conclusion, OPPD is taking the appropriate actions in response to GL 2004-02 to ensure acceptable ECCS performance in the recirculation mode. With the completed actions (i.e., new sump strainers, replacement of sump buffering agent, insulation removal), detailed analyses and testing, and implementation of the modification to CSS actuation logic following NRC approval of LAR-07-04, OPPD is in compliance with the requirements of GL 2004-02. Long-term programs for control and monitoring of debris will ensure that the ECCS will continue to conform to the requirements of GL 2004-02.

Remaining actions outlined in this response required to address the issues in GL 2004-02 will be completed by the dates established between OPPD and the NRC. The configuration of the plant that will exist once all 2008 RFO modifications and actions are implemented for regulatory compliance is discussed next.

2. General Description of and Schedule for Corrective Actions

Provide a general description of actions taken or planned, and dates for each. For actions planned beyond December 31, 2007, reference approved extension requests or explain how regulatory requirements will be met as per Requested Information Item 2(b). (Note: All requests for extension should be submitted to the NRC as soon as the need becomes clear, preferably not later than October 1, 2007).

GL 2004-02 Requested Information Item 2(b)
A general description of and implementation schedule for all corrective actions, including any plant modifications that you identified while responding to this generic letter. Efforts to implement the identified actions should be initiated no later than the first refueling outage starting after April 1, 2006. All actions should be completed by December 31, 2007. Provide justification for not implementing the identified actions during the first refueling outage starting after April 1, 2006. If all corrective actions will not be completed by December 31, 2007, describe how the regulatory requirements discussed in the Applicable Regulatory Requirements sections will be met until the corrective actions are completed.

OPPD Response:
In References 33 through 35, OPPD requested extensions of the December 31, 2007, date until completion of the 2008 RFO scheduled to last from April 19 to May 24, 2008. The NRC approved OPPD's requests in Reference 40. The remaining corrective actions required to address the requirements of GL 2004-02 will be completed prior to startup from the 2008 RFO. This is dependent upon NRC approval of LAR 07-04.

OPPD installed replacement containment sump strainers during the 2006 RFO and will implement changes to the CSS actuation logic during the 2008 RFO. In addition to these changes, another improvement to be implemented during the 2008 RFO will be to band insulation attached to the letdown spray line outside of the bioshield wall.

The analyses in support of GL 2004-02 are complete with the following exceptions:

1. Cyclone separator testing for resolution of potential plugging as discussed in Section 3m
2. LOCA Deposition Model (LOCADM) fuel evaluation as discussed in Section 3n
3. Verification of the head loss data obtained during testing as discussed in Section 3f
4. Validation of the flashing evaluation as discussed in Section 3f

OPPD will provide the NRC with the results of the analysis and information regarding the cyclone separator testing in a supplemental response. When the formal limitations and conditions (Reference 50) are issued by the NRC in regards to WCAP-16793-NP (Reference 53), OPPD will evaluate them and provide a response. OPPD currently plans to include all supplemental information in the GL 2004-02 closeout letter within 90 days of the end of the 2008 RFO.

3a. Break Selection

NRC Guidance
The objective of the break selection process is to identify the break size and location that present the greatest challenge to post-accident sump performance.
- *Describe and provide the basis for the break selection criteria used in the evaluation.*
- *State whether secondary line breaks were considered in the evaluation (e.g., main steam and feedwater lines) and briefly explain why or why not.*
- *Discuss the basis for reaching the conclusion that the break size(s) and locations chosen present the greatest challenge to post-accident sump performance.*

OPPD Response
Line breaks that require recirculation from the containment sump were evaluated. A review of the accident analysis and operational procedures was performed to determine the scenarios that require the containment spray and emergency core cooling systems to take suction from the containment sump. This review identified the high energy piping systems to be evaluated for a postulated high-energy-line-break (HELB) and associated debris generation.

High-energy piping was identified on process flow diagrams to determine the scope of the break analysis. The breaks are postulated to occur anywhere (inside and outside the bioshield walls) in the high-energy lines up to the first isolation valve.

The FCS accident analyses were reviewed to determine which accidents require sump operation. Large-break LOCAs and certain small-break LOCAs require sump operation during ECCS recirculation. Other HELBs were considered and it was determined that sump operation was not required based on review of the Updated Safety Analysis Report (USAR), Emergency Operating Procedures (EOP) and accident analyses information. These analyses are described below.

Large-Break LOCAs (LBLOCAs)
The FCS USAR classifies a LOCA as an instantaneous rupture of a reactor coolant system (RCS) pipe, ranging in cross-sectional area up to and including, that of the largest pipe in the RCS. The full spectrum of LBLOCAs requires ECCS sump operation. A review of the piping and instrumentation drawings associated with the RCS was performed to identify those lines directly attached to the RCS (up to the first isolation valve). The LBLOCA lines are:

32" RCS (hot leg)
24" RCS (cold leg, including reactor coolant pump (RCP) suction and discharge piping)
12" Safety Injection (SI) up to the first check valve
12" Shutdown Cooling (SDC) up to the first isolation valve
10" RCS Surge Line to Pressurizer

Small-Break LOCAs (SBLOCAs)
The FCS USAR analyzed a spectrum of cold leg break sizes to determine the most limiting SBLOCA. Since SBLOCAs may result in a recirculation actuation signal (RAS), they must still be considered for debris generation. Of the line sizes analyzed, safety injection (SI) flow is limited for break sizes 0.49 ft^2 (3" inside diameter (ID) pipe) and below, and the plant would be cooled down, depressurized and placed on shutdown cooling prior to reaching RAS. Therefore, only SBLOCA lines 3" and larger require recirculation and are included in this evaluation – no instrument lines or taps are addressed. The SBLOCA lines included are:

3" RCS to Spray Control Valves
4" Pressurizer Code Safety and power operated relief valve (PORV) lines

Other Scenarios
While LOCAs are considered the most likely type of debris generating high energy line breaks (HELBs) that could lead to ECCS sump recirculation, other scenarios were evaluated to ensure that they could not result in debris generation followed by the need for ECCS recirculation as a means of long term core cooling. As long as the RCS remains intact, the intent in pressurized water reactor (PWR) design is to provide decay heat removal via the steam generators until the plant can be cooled down, depressurized and placed on the decay heat removal system. Therefore, other than for LOCAs, analyses in the USAR do not explicitly describe a sequence of events which show that ECCS recirculation is not reached. Rather, the analyses show (either directly or indirectly) that decay heat removal via at least one steam generator is established and maintained throughout the event. Based on the establishment of decay heat removal via the steam generators, it can then be concluded that ECCS system flow through the core (once through cooling) is not necessary for decay heat removal and that the LOCA is the only case for debris generation with a RAS.

Main Steam Line Break
Section 14.12 of the USAR analyzes the main steam line break (MSLB) accident. The 4th paragraph of Section 14.12.1, "General" states: "The core is shut down (1) by reactivity removal when the affected steam generator begins to dry out and the primary coolant temperatures begin to increase and (2) ultimately by operator - controlled boric acid injection delivered by the safety injection system." The MSLB analysis shows that high pressure safety injection (HPSI) flow is terminated at approximately 435 seconds as RCS pressure recovers above the shutoff head of the HPSI pumps, while RCS temperature stabilizes at approximately 550°F, which corresponds to the lift setpoint of the steam generator code safety valves.

Based on these inputs, it is apparent that the affected steam generator is isolated and decay heat removal is established via the main steam system via the unaffected steam generator long before ECCS recirculation would be required. Therefore, ECCS recirculation is not necessary to maintain long-term decay heat removal in this event.

For a large MSLB accident, it can be shown that containment pressure would remain well below design limits prior to the onset of switchover to recirculation. For those smaller break sizes where the mass and energy release to containment might extend beyond the point where RAS would occur (due to safety injection and refueling water tank (SIRWT) depletion via containment spray), the energy release rate is small enough to fall within the capacity of one train of containment emergency cooling units. Therefore, CS on recirculation is not required and will not be available for containment heat removal or source term reduction in this event.

Main Feedwater Line Rupture

Section 14.10 of the USAR analyzes malfunctions of the feedwater system. Complete loss of feedwater flow from the main feedwater system could occur in the event of a rupture of a feedwater line. Check valves in the feedwater lines to each steam generator prevent a steam generator blowdown should such an unlikely event occur. Rupture of a feedwater line downstream of one of these check valves would result in blowdown of one steam generator, leaving one steam generator intact for subsequent long term heat removal. The final paragraph in Section 14.10 states, "During this time interval, automatic actuation of the safety grade auxiliary feedwater system on low steam generator level (32% wide range level) would occur to assure that a secondary heat sink is maintained. This will allow the cooldown of the plant to proceed in an orderly fashion using the power operated safety valves (MS-291 and MS-292), after which, shutdown cooling can be initiated." Based on this paragraph, it is clear that ECCS is not required for long term cooling or for source term reduction on a feedwater line break.

Per USAR Section 14.10, "The rupture of a main steam line, discussed as in USAR Section 14.12 represents an upper limit for (the energy release from) such an accident." Consequently, for containment heat removal, the energy release from a feedwater line break is bounded by the analyses for a MSLB. As discussed above, CS on recirculation is not necessary for containment heat removal or for source term reduction in a MSLB. Therefore, based on the description provided in Section 14.10 of the USAR, it can be concluded that ECCS recirculation is not necessary to maintain containment pressure/temperature for a feedwater line break.

Summary Break Selection

A sufficient number of breaks in each high-pressure system that relies on recirculation was considered to reasonably bound variations in debris generation by the size, quantity and type of debris. This approach was favored to identify the maximum amount of debris generated/available for transport and the worst case break of debris mixes. As a minimum, the following break locations were included and considered (Reference 1):

Break No. 1: Breaks in the RCS with the largest potential for debris.
Break No. 2: Large breaks with two or more different types of debris.
Break No. 3: Breaks in the most direct path to the sump (small-break LOCA case).

Break No. 4: Large breaks with the largest potential particulate insulation to fibrous insulation ratio by weight.
Break No. 5: Breaks that generate a "thin bed" – high particulate with 1/8" fiber bed.

A walkdown documented in the 2003 RFO (Reference 2) identified several types of insulation debris within the containment. Following the 2006 RFO, the insulation walkdown report was updated to reflect all major insulation changes. The majority of the insulation in containment is in the two steam generator bays. The bays contain Cal-Sil, Cerafiber®, NUKON®, Thermal-Wrap®, Temp-Mat®, and RMI. Since the largest amount of insulation is in the same zone that has several different types of debris, Break No. 1 enveloped Break No. 2. In addition, Break No. 4 was designed to primarily capture particulate type insulation and was screened out by Break No. 5. Therefore, only Breaks No. 1, 3, and 5 were evaluated in detail.

3b. Debris Generation/Zone of Influence (ZOI) (excluding coatings)

NRC Guidance

The objective of the debris generation/ZOI process is to determine, for each postulated break location: (1) the zone within which the break jet forces would be sufficient to damage materials and create debris; and (2) the amount of debris generated by the break jet forces.

- *Describe the methodology used to determine the ZOIs for generating debris. Identify which debris analyses used approved methodology default values. For debris with ZOIs not defined in the guidance report (GR)/safety evaluation (SE), or if using other than default values, discuss method(s) used to determine ZOI and the basis for each.*
- *Provide destruction ZOIs and the basis for the ZOIs for each applicable debris constituent.*
- *Identify if destruction testing was conducted to determine ZOIs. If such testing has not been previously submitted to the NRC for review or information, describe the test procedure and results with reference to the test report(s).*
- *Provide the quantity of each debris type generated for each break location evaluated. If more than four break locations were evaluated, provide data only for the four most limiting locations.*
- *Provide total surface area of all signs, placards, tags, tape, and similar miscellaneous materials in containment.*

OPPD Response

The ZOI is defined as the volume about the break in which the fluid escaping from the break has sufficient energy to generate debris from insulation, coatings, and other materials. The shape of the ZOI for a postulated break location is generally defined as spherical for double-ended fully offset breaks and hemispherical for single-ended breaks. The size of the ZOI was defined in terms of pipe diameters and determined based on the pressure contained by the piping and the destruction pressure of the insulation surrounding the break site.

The destruction pressures and associated ZOI radii for FCS specific materials are presented in Table 1 below, which shows values from the NRC Safety Evaluation Report (SER) methodology (Reference 49) and the values used in Reference 1.

Table 1
ZOI Radii for Common Insulation

Insulation Types	Destruction Pressure (psi)	ZOI Radius (Radius/Break Diameter)	
		SER Value	Used Value
Cal-Sil (Al. cladding, SS bands)	24	5.45	See Table 4
Temp-Mat® with stainless steel wire retainer	10.2	11.70	See Table 3
Unjacketed NUKON® / Jacketed NUKON® Thermal-Wrap / Low Density Fiber Glass (LDFG)	6	17.0	See Table 2
LDFG/NUKON® (banded)	NA	NA	3**
RMI	114	2.0	17.1*

* The SER-recommended ZOI for NUKON® (17.0) is conservatively applied to all RMI insulation in the region within the ZOI. However, it should be noted that RMI has a higher destruction pressure and would result in a smaller ZOI, as noted in the above table.

**The value of 3 L/D (length/diameter) ZOI for banded LDFG/NUKON® was as a result of testing performed and documented in WCAP-16851-P, Revision 0, "Florida Power and Light Jet Impingement Testing of Cal-Sil Insulation," dated October 2007.

Refined ZOIs were used based on multiple sub-zones for Cal-Sil, NUKON®/LDFG, and Temp-Mat®. This approach yields greater benefit when using CFD for the debris transport calculation by dividing the debris generated into more size categories. Further details are provided in the debris size distribution tables.

When the spherical ZOI approach is employed, it is adjusted to appropriately account for robust barriers. Robust barriers consist of structures and equipment that are impervious to jet impingement and prevent further expansion of the break jet. If a robust barrier is encountered by a break jet, the ZOI created will have a spherical boundary with the exception of the volume beyond the robust barrier. Therefore, the estimates of the ZOI of material damage will be guided by the spatial layout of plant piping and compartments (robust barriers). It should be noted that for most large breaks, the ZOI could be sufficiently large to encompass all of the debris within the room or compartment. For LDFG, Temp-Mat®, and Cal-Sil calculations, a full ZOI was used (i.e., no truncation because of robust barriers within a compartment), and no reflection off of walls was included. Note that the compartment walls were credited as robust barriers so that a ZOI did not affect debris sources outside of its compartment. Since robust barriers within compartments were not included for truncation of the ZOI, this is anticipated to offset any possible debris generation from jet reflection.

Jacketed NUKON®

The SER (Reference 49) lists a destruction pressure for jacketed NUKON® as 6 psig. This corresponds to a ZOI of 17D (diameter). The analysis documented in Appendix II of the SER confirms the adequacy of using 60% for the fraction of small fines debris generation for NUKON® fiberglass insulation. Further, that analysis also confirmed the 60% number for Transco and Knaupf insulations, which are both LDFG and similar to

NUKON®. It concludes that the small fine generation of 60% is a realistic value that is only slightly conservative.

To provide further benefit from the CFD analysis that was performed for FCS in support of the GSI-191 resolution, a four-size distribution (Reference 3) has been applied to the NUKON® and other LDFG debris types. This refined size distribution methodology utilizes several ZOIs, defined as sub-zones, and applies appropriate size distributions to each sub-zone. In general, sub-zones farther away from a break will generate a higher percentage of large pieces, while sub-zones closer to a break will generate a higher percentage of fines and small pieces. The size distributions for NUKON® for each sub-zone are shown in Table 2 below. Further refinement has been utilized for LDFG insulation installed on a small line outside the bioshield near the sump strainers. Banded insulation test data (Reference 36) reporting a ZOI of 3L/D was utilized for a ZOI refinement on this line only for the SBLOCA scenario. The test data conservatively indicates that banded insulation installed systems have a much lower destruction ZOI than that utilized for other insulation systems.

Table 2
Destroyed NUKON® Debris Size Distribution

Debris Size	**18.6 psi ZOI (7.0 L/D)**	**10.0 - 18.6 psi ZOI (11.9 - 7.0 L/D)**	**6.0 – 10.0 psi ZOI (17.0 – 11.9 L/D)**
Fines (Individual Fibers)	20%	13%	8%
Small Pieces (<6" on a side)	80%	54%	7%
Large Pieces (>6" on a side)	0%	16%	41%
Intact (covered) Blankets	0%	17%	44%

Temp-Mat®

The SER (Reference 49) lists a destruction pressure of 10.2 psig for Temp-Mat®, corresponding to a ZOI of 11.7D. As a refinement to the SER methodology, the refined size distribution report (Reference 3) uses two sub-zones, one with a destruction pressure of 45.0 psi and another with a destruction pressure of 10.2 psi. These correspond to ZOIs of 3.7 L/D and 11.7 L/D, respectively. These refined ZOIs were used for the calculation of Temp-Mat® debris destroyed by a LOCA. The size distribution used is shown in Table 3, below.

Table 3
Destroyed Temp-Mat Debris Size Distribution

Debris Size	45.0 psi ZOI (3.7 L/D)	10.2 – 45.0 psi ZOI (11.7 – 3.7 L/D)
Fines (Individual Fibers)	20%	7%
Small Pieces (<6" on a side)	80%	27%
Large Pieces (>6" on a side)	0%	32%
Intact (covered) Blankets	0%	34%

Cerafiber®
NEI 04-07 (Reference 48) has insufficient data or direction regarding the destruction pressures or debris size distribution of Cerafiber®. Absent applicable experimental data, a value of 100% small fines is adopted by this analysis for Cerafiber® in a ZOI. A value of 100% small fines is conservative because this will ensure 100% transport to the sump screen.

Calcium Silicate Insulation (Cal-Sil) & Calcium Silicate with Asbestos
There is a wide variety of types of calcium silicate insulation installed in PWRs. Some types use fiberglass fibers as reinforcement, some use organic fibers, and some of the Cal-Sil used up to the late 1960s used asbestos fibers. Scanning electron microscope (SEM) examination of FCS calcium silicate (with and without asbestos)(Reference 9 and 8) indicates that both types can be classified similarly and therefore, this analysis does not differentiate between these two types. The refined size distribution report (Reference 3) was also used for the calculation of Cal-Sil debris destroyed by a LOCA. The size distribution used is shown below in Table 4 below. Note that the portion of Cal-Sil debris that remains on target (not submerged) is not subject to further erosion as FCS will not be initiating spray for LOCA. There would be no further erosion as there would be no spray motive force for removal of material from insulation surfaces.

Table 4
Destroyed Cal-Sil Debris Size Distribution

Debris Size	70.0 psi ZOI (2.7 L/D)	20.0 – 70.0 psi ZOI (6.4 – 2.7 L/D)
Fines	50%	23%
Small Pieces (Under 1" to Over 3")	50%	15%
Remains on Target	0%	62%

Foam Rubber
Foam Rubber is a material typically found on demineralized water lines. The SER does not discuss foam rubber, and absent any available data on the size distribution that might be expected, it is conservatively assumed that it is 100% fines. When destroyed, this insulation floats and is not considered in the head loss analysis of the sump as the sump is completely submerged.

Filter Media – Charcoal & Fiberglass
NEI 04-07 (Reference 48) has insufficient data or direction regarding the destruction pressures or debris size distribution of generic low-density fiberglass. Absent applicable experimental data, a value of 100% small fines is adopted by this analysis for filter media in a ZOI. Per the walkdown packages, no filter media is located within the bioshield and is therefore not subject to debris generation as a result of a LOCA. All of the charcoal media is located on the operating floor elevation of 1060' and all of the fiberglass media is on the 1060' elevation or outside the bioshield. This filter media is outside of any ZOI and is not subject to direct containment spray impingement; therefore, filter media is not considered a credible debris source.

Pabco® HD Supertemp (Calcium Silicate) Fire Barrier Board Panel
Absent applicable experimental data, a value of 100% small fines is adopted by this analysis for Pabco® HD Supertemp in a ZOI. Per the walkdown packages, no Pabco® HD Supertemp is located within the bioshield and is therefore not subject to debris generation as a result of a LOCA.

Fiberglass – E-glass Installed at Inlet Nozzles of Reactor Vessel
Approximately 150 feet of fiberglass rope have been installed at the inlet nozzles of the reactor vessel to fill gaps in an effort to reduce heat losses. This is the only fibrous debris source in the case of a reactor vessel nozzle break.

Break No. 1 – Largest Potential for Debris
The LBLOCA in the RCS is the controlling break in terms of quantity of debris generated. The quantities of debris source material are distributed in the FCS containment as follows:

Table 5
Insulation Quantity by Location

Insulation Type	Inside Bio-shield	Outside Bio-shield	Total
Asbestos (ft^3)	353.11	358.35	711.46
Calcium Silicate (ft^3)	16.68	33.20	49.88
Cerafiber (ft^3)	2.35	1.93	4.28
Fiberglass (ft^3)	381.86	969.97	1351.83
Foam Rubber (ft^3)	0.97	11.08	12.05
NUKON® (ft^3)	4.73	16.24	20.96
Pabco® HD Supertemp (ft^3)	0.00	12.69	12.69
Phenolic Bonded Glass Fiber (ft^3)	0.00	800.00	800.00
Temp-Mat® (ft^3)	189.90	43.92	233.82
RMI (ft^2)	105483.98	0.00	105483.98

Given the arrangement of the RCPs and steam generators (SGs), a fully offset double-ended guillotine break (DEGB) in the hot leg just prior to the vertical rise would most likely destroy the maximum amount of insulation. A 32-inch break of piping (hot leg)

attached to the RCS is assumed. The break diameters are taken as the inner pipe diameters.

Figure 1, below, illustrates the coverage of the spherical ZOIs for the three sub-zones of NUKON® and LDFG in the SG A bay at the 32" hot leg. Note that while Figure 1 illustrates the size of the ZOIs when no credit is taken for compartmentalization, Figure 2, below, shows the area that would actually be taken as containing the debris sources for this break. Essentially, only debris sources within the same compartment as the break are considered available for debris generation. From these figures, it is clear that a 17 L/D assumed sphere for NUKON® encompasses virtually the entire bay and would extend into other areas if the containment were not compartmentalized. Figure 3 below illustrates that inside the bioshield walls, the SG bays are compartmentalized, and that the walls of the steam generator bays can be considered robust barriers. Therefore, only debris sources inside the bioshield wall and within the steam generator bays were considered for the LBLOCA debris generation analysis. For the LBLOCA analysis, four breaks were considered, in order to assure that the bounding case has been identified. The breaks considered are:

SG A Bay: 32" Hot Leg at RC-2A
SG A Bay: 24" Cold Leg at RC-3A
SG B Bay: 32" Hot Leg at RC-2B
SG B Bay: 24" Cold Leg at RC-3D

The debris quantities and size distributions calculated for these four breaks are shown in Table 6 below.

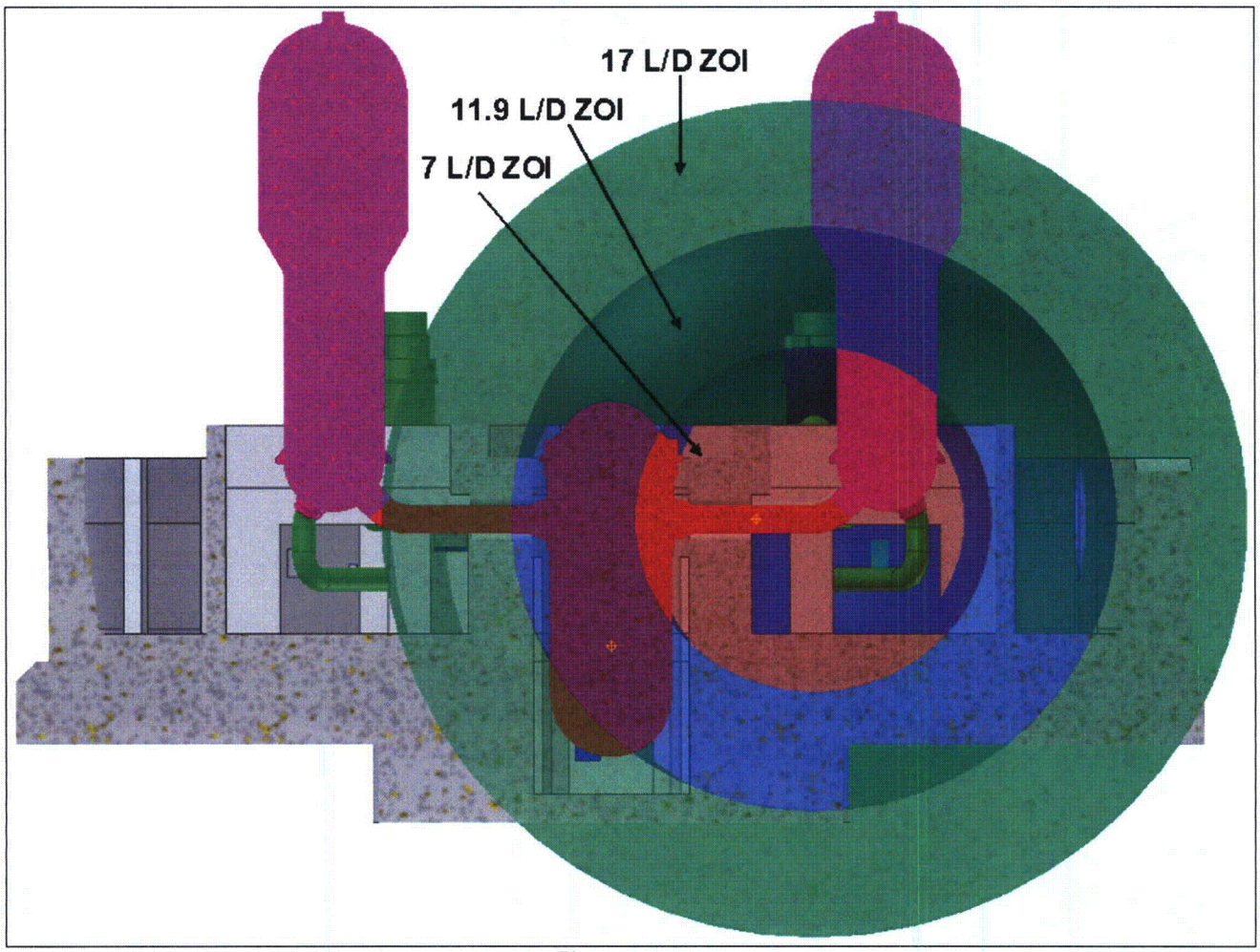

Figure 1
Break No. 1 RCS Hot-Leg Break NUKON® Zones of Influence Side View– Steam Generator A Bay

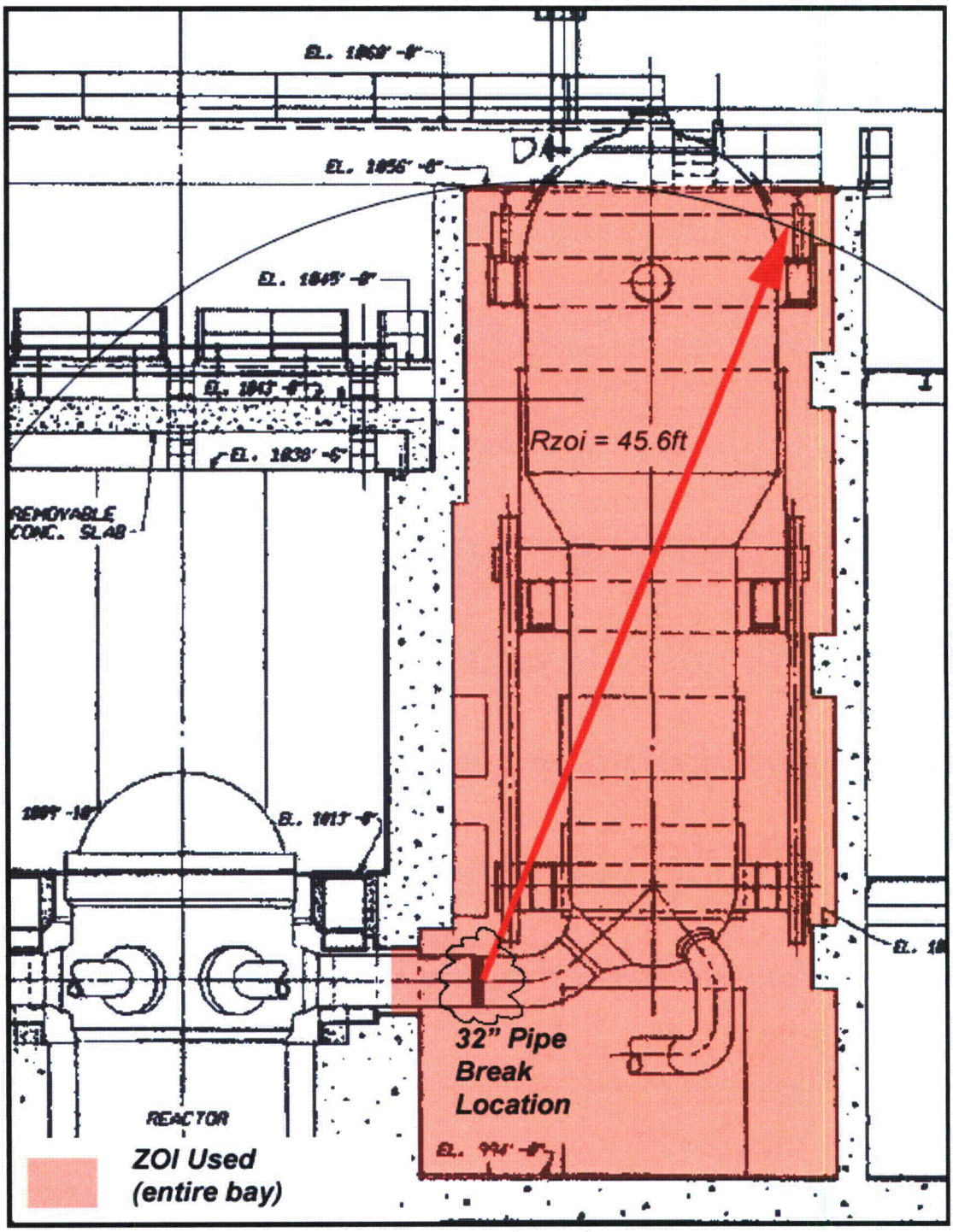

Figure 2
Break No. 1 RCS Hot Leg Break 17 L/D Zone of Influence Elevation View– Steam Generator A Bay

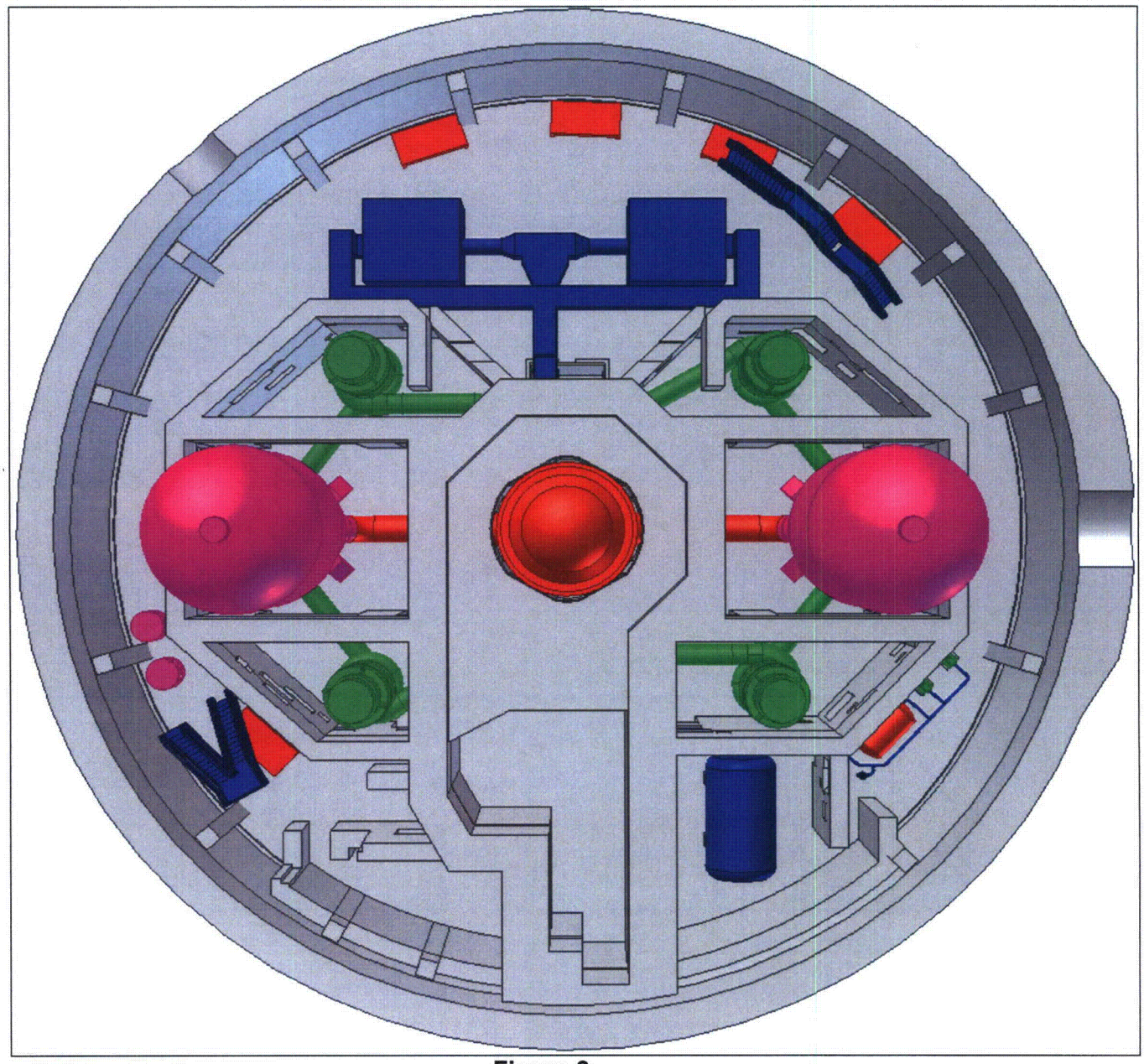

Figure 3
Compartment Plan View FCS Containment

Table 6
Break No. 1 LBLOCA

Debris Type	Debris Size	Debris Quantity Generated (ft^3)			
		RC-2A Hot Leg SG A Bay	RC-3A Cold Leg SG A Bay	RC-2B Hot Leg SG B Bay	RC-3D Cold Leg SG B Bay
Stainless Steel RMI (ft^2)	Fines (<0.25")	9931.80	9931.80	9931.80	9931.80
	Small Pieces (<4")	19863.60	19863.60	19863.60	19863.60
	Large Pieces (>4")	3310.60	3310.60	3310.60	3310.60
	Total	**33106.00**	**33106.00**	**33106.00**	**33106.00**
TempMat® (ft^3)	Fines	9.51	7.44	5.38	0.96
	Small Pieces (<6")	37.01	29.55	21.13	3.71
	Large Pieces (>6")	33.16	6.76	13.10	4.40
	Intact Pieces (>6")	35.23	7.18	13.91	4.67
	Total	**114.91**	**50.93**	**53.52**	**13.75**
LDFG - NUKON® (ft^3)	Fines	0.04	0.02	0.65	0.11
	Small Pieces (<6")	0.18	0.02	2.68	0.09
	Large Pieces (>6")	0.00	0.09	0.57	0.55
	Intact Pieces (>6")	0.00	0.10	0.60	0.59
	Total	**0.22**	**0.22**	**4.51**	**1.34**
LDFG - Fiberglass (ft^3)	Fines	20.96	10.72	19.16	11.63
	Small Pieces (<6")	70.73	34.65	72.10	39.99
	Large Pieces (>6")	21.77	18.97	8.32	18.55
	Intact Pieces (>6")	23.35	20.31	8.92	19.83
	Total	**136.78**	**84.64**	**108.50**	**89.99**
Cal-Sil (ft^3)	Particulate	2.48	0.16	0.61	0.03
	Pieces > 1"	2.48	0.11	0.40	0.02
	Total	**4.96**	**0.27**	**1.01**	**0.06**
Cal-Sil (w/ Asbestos) (ft^3)	Particulate	21.67	8.68	22.91	20.02
	Pieces > 1"	17.46	6.15	15.03	16.73
	Total	**39.13**	**14.83**	**37.94**	**36.75**
Cerafiber (ft^3)	Total (Fines)	0.63	0.63	1.72	1.72
Foam Rubber (ft^3)	Total (Fines)	0.54	0.54	0.43	0.43
Sand (ft^3)	Total (Fines)	0.00	0.00	0.00	0.00

The quantity of RMI insulation destroyed is very conservative as the destruction pressure for RMI is much higher than that of fibrous insulation and would equate to a much smaller ZOI. However, this conservative result has little impact on sump screen performance compared to the effects of the fibrous insulation, as the transport analysis will show.

Break No. 2 – Large breaks with two or more different types of debris

Break No. 1 has the largest amount of insulation and has several different types of debris. Therefore, the debris generation of Break No. 1 envelopes that of Break No. 2. The intent of Break No. 2 is to ensure that the analysis considers breaks with the potential to transport a variety of debris types. For example, a break with fiber and particulate debris could result in higher head loss across the sump screen than a break with only fiber, even if the latter break produces a much greater quantity of fiber. Since the Break No. 1 cases all generate a variety of debris types (high-density fiber, low-

density fiber, particulate, RMI, etc.), it is bounding for both the largest amount of debris and the different types.

Break No. 3 – Breaks in the most direct path to the sump
There are two scenarios analyzed for the most direct path from a high-energy line to the sump break:

1) The first scenario is a break in the 3" pressurizer spray control valve piping from the RCS to the Pressurizer Spray Control Valves PCV-103-1 & PCV-103-2 (see Figure 4 below).
2) The second scenario is a break in the RCP pipe inside the Steam Generator B bay with a direct path from the bay to the sump through an open doorway.

The containment sump is located just outside the Steam Generator B bay and any break outside the bay (Scenario 1), although considered a SBLOCA will generate debris capable of being transported directly to the sump. A LBLOCA inside the steam generator bay is also capable of transporting debris to the sump (Scenario 2).

The pressurizer spray control valve piping extends from the Steam Generator B bay to the outer containment wall and over to the spray control valves just outside the pressurizer bay. A break just outside the steam generator bay will be analyzed. The second scenario, a break inside the steam generator bay, was analyzed in Break No. 1, which analyzed LBLOCA breaks in both steam generator bays. Therefore scenario 2 was considered to already be analyzed, and only the 3" spray control valve line was evaluated.

It was determined that there are no other insulated pipes within the Cal-Sil and LDFG ZOIs for this break location. To confirm this, the ZOIs were plotted in the CAD model along with the nearest pipes and it was verified that these lines are not within the ZOIs for Cal-Sil or LDFG. Thus, the only insulation destroyed will be the Cal-Sil and LDFG insulation on the 3" pressurizer spray pipe. The corresponding ZOIs for a break on the 3" spray control valve line are calculated based on a 3" pipe diameter (nominal) using the destruction pressures and ZOIs presented in Tables 2 and 4.

Table 7 below shows the debris quantities calculated for the SBLOCA case. It can be seen that this case is bounded by the LBLOCAs with respect to quantities of debris considered in Break No. 1.

Table 7
Break No. 3 SBLOCA 3" Spray Control Line

Debris Type	Debris Size	Debris Quantity Generated (ft^3)
Stainless Steel RMI (ft^2)	Fines (<0.25")	0.00
	Small Pieces (<4")	0.00
	Large Pieces (>4")	0.00
	Total	**0.00**
TempMat® (ft^3)	Fines	0.00
	Small Pieces (<6")	0.00
	Large Pieces (>6")	0.00
	Intact Pieces (>6")	0.00
	Total	**0.00**
LDFG - NUKON® (ft^3)	Fines	0.00
	Small Pieces (<6")	0.00
	Large Pieces (>6")	0.00
	Intact Pieces (>6")	0.00
	Total	**0.00**
LDFG - Fiberglass (ft^3)	Fines	0.98
	Small Pieces (<6")	0.00
	Large Pieces (>6")	0.00
	Intact Pieces (>6")	0.00
	Total	**0.98**
Cal-Sil (ft^3)	Particulate	0.12
	Pieces > 1"	0.12
	Total	**0.24**
Cal-Sil (w/ Asbestos) (ft^3)	Particulate	0.26
	Pieces > 1"	0.23
	Total	**0.49**
Cerafiber® (ft^3)	Total (Fines)	0.00
Foam Rubber (ft^3)	Total (Fines)	0.00
Sand (ft^3)	Total (Fines)	0.00

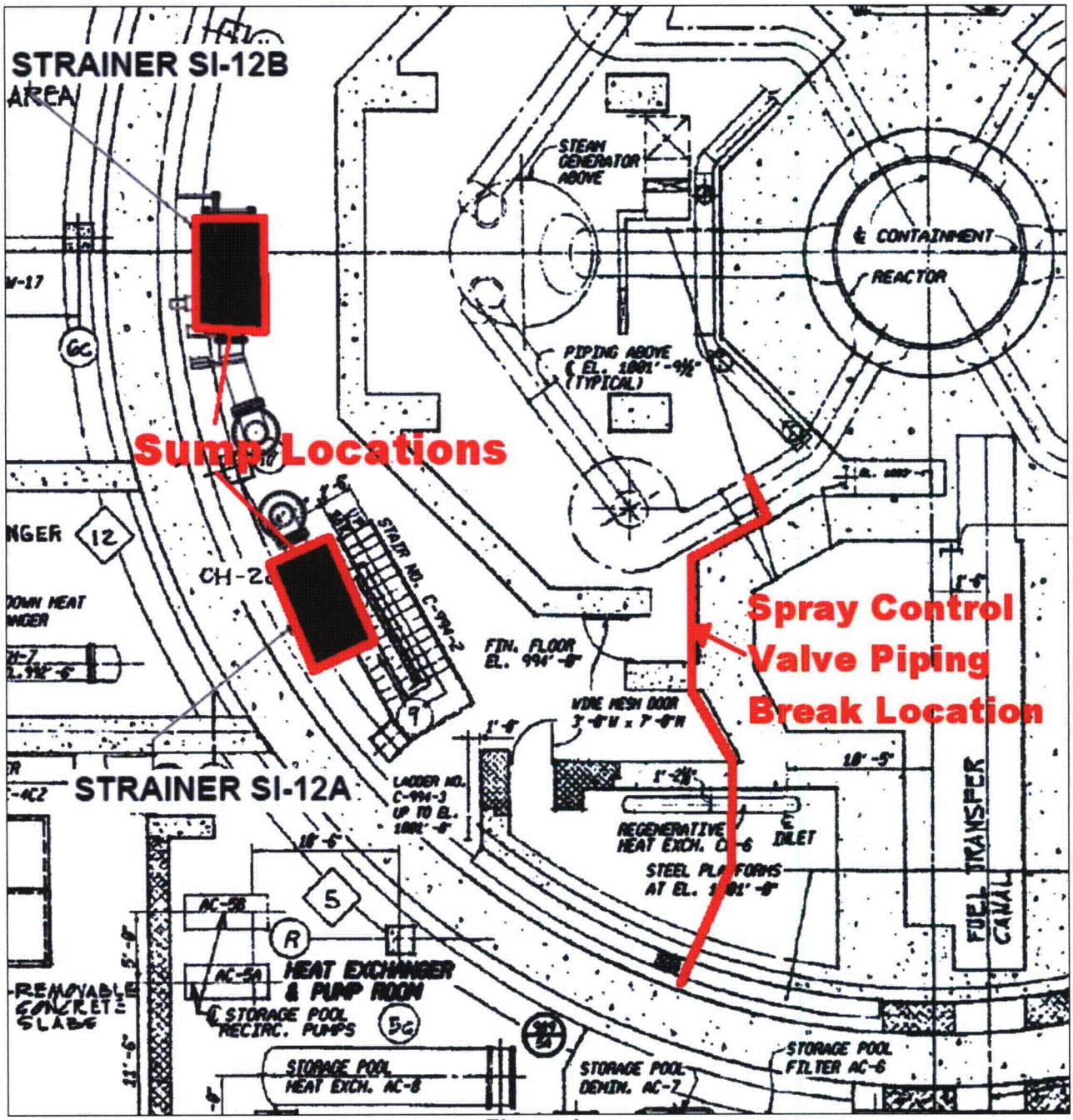

Figure 4
Break No. 3 Pressurizer Spray Control Valve Line Routing

Break No. 4 – Large breaks with largest potential particulate to insulation ratio
Break No. 4 is designed to primarily capture particulate type insulation and is screened out by Break No. 5. Also since Break No. 1 cases include a large amount of particulate type insulation within the ZOIs the largest potential particulate to insulation ratio is addressed by those limiting breaks as well.

Break No. 5 – Breaks that generate a "thin bed"
This break is one that could generate an amount of fibrous debris that, after its transport to the sump screen, could form a uniform thin bed that could subsequently filter sufficient particulate debris to create a relatively high head loss referred to as the thin-bed effect. The minimum thickness of fibrous debris needed to form a thin bed has been typically estimated at 1/8" thick.

Many possible HELBs at FCS can be postulated where a small quantity of fibrous debris is generated and transported to the sump followed by washdown of particulate latent debris potentially resulting in the thin-bed effect. Rather than analyzing specific HELBs, the thin-bed effect is specifically addressed in the FCS Head-Loss Testing (Section 3.f). A range of thin bed thicknesses were tested to determine the worst case, which was then used in the chemical effects testing.

Reactor Vessel Nozzle Break
A break at the reactor vessel nozzle was also considered, and was found to be bounded by the other LBLOCAs already analyzed in terms of the head loss that could be caused by debris generated. The only insulation types present in the reactor cavity are RMI (25,900 ft^2) and fiberglass rope (7.64 ft^3), and six sand boxes one above each of the hot and cold legs. The sand boxes are metal containers with removable bottoms located above each RPV penetration (4 cold legs and 2 hot legs). The sandboxes were originally installed to allow access to the reactor vessel nozzles for weld inspections. The sand is used to reduce radiation exposure for equipment and personnel in the adjacent areas. For conservatism, all of the RMI and fiberglass rope are treated as being destroyed and deposited in the SG bays, available for transport to the sump screens. It is assumed that only the sand box directly above the particular hot or cold leg involved in the reactor vessel nozzle break would be destroyed. Therefore, regardless of which leg is involved in the break (all six sand boxes are identical), a total quantity of 32.81 ft^3 of sand will be generated by this break case, and is considered available for transport to the sump screens.

In addition to these sources, a reactor vessel nozzle break would destroy or dislodge some debris sources installed in the piping penetrations from the reactor cavity to the steam generator bays. These debris sources include Temp-Mat® and Cal-Sil. Each penetration is isolated from the others by the structure of the reactor shield wall, and the reactor itself would act as a robust barrier, preventing any one reactor vessel nozzle break from affecting debris in penetrations other than its own. However, for conservatism, it is assumed that a nozzle break in any one penetration would destroy all insulation in all of the penetrations. Note that this is a highly conservative treatment for

this break. The debris from the penetrations would contribute 11.07 ft^3 of Temp-Mat® and 41.52 ft^3 of Cal-Sil Asbestos. The total debris generated by this break is shown below in Table 8. It can be seen that this break is bounded by the hot leg LBLOCAs at RC-2A and RC-2B, but it generates more Cal-Sil debris than the cold leg LBLOCAs at RC-3A and RC-3D. Note that refined ZOIs, as used for the LBLOCAs, were also applied to the insulation destroyed by this break.

Table 8
Reactor Vessel Nozzle Break

Debris Type	Debris Size	Quantity of Debris Generated (ft^3)
Stainless Steel RMI (ft^2)	Fines (<0.25")	7776.84
	Small Pieces (<4")	15553.69
	Large Pieces (>4")	2592.28
	Total	**25922.81**
TempMat® (ft^3)	Fines	1.69
	Small Pieces (<6")	6.70
	Large Pieces (>6")	1.30
	Intact Pieces (>6")	1.38
	Total	**11.07**
LDFG - NUKON® (ft^3)	Fines	0.00
	Small Pieces (<6")	0.00
	Large Pieces (>6")	0.00
	Intact Pieces (>6")	0.00
	Total	**0.00**
LDFG - Fiberglass (ft^3)	Fines	7.64
	Small Pieces (<6")	0.00
	Large Pieces (>6")	0.00
	Intact Pieces (>6")	0.00
	Total	**7.64**
Cal-Sil (ft^3)	Particulate	0.00
	Pieces > 1"	0.00
	Total	**0.00**
Cal-Sil (w/ Asbestos) (ft^3)	Particulate	23.28
	Pieces > 1"	18.24
	Total	**41.52**
Cerafiber (ft^3)	Total (Fines)	0.00
Foam Rubber (ft^3)	Total (Fines)	0.00
Sand (ft^3)	Total (Fines)	32.81

The total amount of surface area of all signs, placards, tags, tape, and similar miscellaneous materials was documented in Reference 1, The total surface area of these materials is reported in Table 9 below.

Table 9
Approximate Area of Equipment Labels

	TAGS	STICKERS	PIPETAGS	METAL TAGS	PLACARDS	LABELS
	(ft^2)	(ft^2)	(ft^2)	(ft^2)	(ft^2)	(ft^2)
Annulus						
994'	42.7	10.4	23.1	0.3	0.7	0.9
1013'	15.5	4.4	10.5	0.9	0.8	0.9
1045'	6.0	2.1	3.9	0.1	0.1	0.9
A SG Bay						
994'	4.2	1.2	10.8	0.1	0	0.9
1013'	7.5	0.9	3.0	0	0	0.9
1045'	0	0	0	0	0	0
B SG Bay						
994'	3.4	1.1	4.5	0.1	0	0.9
1013'	2.8	0.4	0.6	0	0	0.9
1045'	0.3	0	0.6	0	0	0
PRZ						
994'	2.6	0.4	8.4	0.1	0	0
1013'	1.5	0.3	1.2	0	0	0
1045'	1.8	0	1.8	0	0	0
REGEN						
994'	0.6	1.3	3.3	0	0	0
Total	88.9	22.5	71.9	1.6	1.6	6.3

3c. Debris Characteristics

NRC Guidance
The objective of the debris characteristics determination process is to establish a conservative debris characteristics profile for use in determining the transportability of debris and its contribution to head loss.

- *Provide the assumed size distribution for each type of debris.*
- *Provide bulk densities (i.e., including voids between the fibers/particles) and material densities (i.e., the density of the microscopic fibers/particles themselves) for fibrous and particulate debris.*
- *Provide assumed specific surface areas for fibrous and particulate debris.*
- *Provide the technical basis for any debris characterization assumptions that deviate from NRC-approved guidance.*

OPPD Response
The debris sources at FCS include insulation, coating, sand and latent debris. The insulation debris includes both fiber (jacketed NUKON®, Temp-Mat®, Cerafiber®, and LDFG), Calcium silicate and Calcium silicate with asbestos, and stainless steel RMI. The characteristics of the insulation debris material are discussed in this section and were also discussed previously in the response to Section 3b; the characteristics of the other debris types (e.g. coatings and latent) are included in the Section 3d and 3h responses.

Size Distribution

NUKON® and Low Density Fiber Glass
The SER (Reference 49) lists a destruction pressure for Jacketed NUKON® as 6 psig This corresponds to a ZOI of 17D. The analysis documented in Appendix II of the SER confirms the adequacy of using 60% for the fraction of small fines debris generation for NUKON® fiberglass insulation. Further, that analysis also confirmed the 60% number for Transco and Knaupf insulations, which are both LDFG and similar to NUKON®. It concludes that the small fine generation of 60% is a realistic value that is only slightly conservative.

To provide further benefit from the CFD analysis performed for FCS in support of the GSI-191 resolution, a four-size distribution has been applied to the NUKON® and other LDFG debris types (Reference 3). This refined size distribution methodology utilizes several ZOIs, defined as sub-zones, and applies appropriate size distributions to each sub-zone. In general, sub-zones farther away from a break will generate a higher percentage of large pieces, while sub-zones closer to a break will generate a higher percentage of fines and small pieces. The size distributions for NUKON® for each sub-zone are shown below and were previously provided in the response to Section 3b.

Table 10
Destroyed Nukon® Debris Size Distribution

Debris Size	18.6 psi ZOI (7.0 L/D)	10.0 - 18.6 psi ZOI (11.9 - 7.0 L/D)	6.0 – 10.0 psi ZOI (17.0 – 11.9 L/D)
Fines (Individual Fibers)	20%	13%	8%
Small Pieces (<6" on a side)	80%	54%	7%
Large Pieces (>6" on a side)	0%	16%	41%
Intact (covered) Blankets	0%	17%	44%

Temp-Mat®
The SER lists a destruction pressure of 10.2 psig for Temp-Mat®, corresponding to a ZOI of 11.7D (Reference 49). As a refinement to the SER methodology, the Alion refined size distribution report (Reference 3) uses two sub-zones, one with a destruction pressure of 45.0 psi and another with a destruction pressure of 10.2 psi. These correspond to ZOIs of 3.7 L/D and 11.7 L/D, respectively. These refined ZOIs were used for the calculation of Temp-Mat® debris destroyed by a LOCA. The size distribution used is shown in Table 11 below.

Table 11
Destroyed Temp-Mat Debris Size Distribution

Debris Size	45.0 psi ZOI (3.7 L/D)	10.2 – 45.0 psi ZOI (11.7 – 3.7 L/D)
Fines (Individual Fibers)	20%	7%
Small Pieces (<6" on a side)	80%	27%
Large Pieces (>6" on a side)	0%	32%
Intact (covered) Blankets	0%	34%

Cerafiber®
The NEI guidance has insufficient data or direction regarding the destruction pressures or debris size distribution of Cerafiber®. Absent applicable experimental data, a value of 100% small fines is adopted by this analysis for Cerafiber® in a ZOI. A value of 100% small fines is conservative because this will ensure 100% transport to the sump screen.

Calcium Silicate Insulation (Cal-Sil) & Calcium Silicate with Asbestos
There is a wide variety of calcium silicate type insulation installed in PWRs. Some include fiberglass fibers as re-enforcement, some others use organic fibers, and some of the Cal-Sil used up to the late 1960s used asbestos fibers. SEM analysis of FCS calcium silicate (with and without asbestos) indicates that both types can be classified similarly. (References 9 and 8) The refined size distribution report (Reference 3) was also used for the calculation of calcium silicate debris destroyed by a LOCA. The size distribution used is shown below.

Table 12
Destroyed Cal-Sil Debris Size Distribution

Debris Size	70.0 psi ZOI (2.7 L/D)	20.0 – 70.0 psi ZOI (6.4 – 2.7 L/D)
Fines	50%	23%
Small Pieces (Under 1" to Over 3")	50%	15%
Remains on Target	0%	62%

Note that the portion of Cal-Sil debris that remains on target (not submerged) was not subject to further erosion as FCS will not be initiating containment spray for LOCA.

Foam Rubber
Foam rubber is a material typically found on demineralized water lines. The SER (Reference 49) does not discuss foam rubber, and absent any available data on the size distribution that might be expected, it is conservatively assumed that it is 100% fines. When destroyed, this insulation floats and should not be considered in the head loss analysis of the sump as the strainer is completely submerged.

RMI (Reflective Metal Insulation)
The RMI installed at FCS is located on the reactor pressure vessel, steam generators, and pressurizer. It has been shown that RMI does not contribute significantly to head loss (Reference 49).

The NEI debris size distribution has two (2) categories: small and large. In actuality, there is a range of debris sizes from individual fines to large canvassed pieces. Clearly, assuming all of the small pieces are individual fines is conservative from a transport and head loss perspective as the individual fines are easily "transportable" and accumulate to form a more uniform dense debris bed.

A specific RMI debris size classification was not developed in the NRC study of boiling water reactor (BWR) strainer performance. However, four (4) broad classes are suggested based on observations of RMI debris generation tests described in Reference 6. These four classes include: (1) small crumpled pieces of RMI foil (0.5 to 1.0 in. across), (2) small flat pieces typically 2 in. across, (3) large crumpled pieces of outer casing, and (4) large flat sheets of RMI foil.

Also, as described in Reference 6, in 1995, the NRC conducted a single debris generation test to generate representative RMI debris to obtain insights and data on the effect of RMI relative to US plants. This test was conducted at the Siemens AG Power Generation Group test facility in Karlestien, Germany. Most of the RMI debris was recovered and categorized by the location where it was found. Approximately 91% of the debris was recovered as loose foil pieces; the remainder was found wedged in place among the structures. The debris was analyzed with respect to size distribution. The following table provides a summary of the size distribution of the RMI debris generated by the steam jet.

Table 13
Destroyed RMI Debris Size Distribution

Debris Size (in.)	Percentage of Total Recovered
¼	4.3%
½	20.2%
1	20.9%
2	25.6%
4	16.8%
6	12.2%

Therefore, for purposes of this calculation all fines shall be classified as ¼" and smaller, clumps of RMI shall be ½" to 4" in size, and large pieces shall be defined as larger than 4". Lacking plant specific data, it is conservatively assumed that 30% is generated as fines, 60% as clumps and 10% as large pieces.

Density of Debris

The bulk density of NUKON® and LDFG is 2.4 lbm/ft^3 and the material density of the individual fibers is 159 lbm/ft^3 per Table 3-2 of the NEI 04-07 Guidance Report (GR) (Reference 48). The bulk density of Temp-Mat® is 11.8 lbm/ft^3 and the material density of the individual fibers is 162 lbm/ft^3 per Table 3-2 of the GR. The bulk density of Cerafiber® is 12 lbm/ft^3 and the material density of the individual fibers is 161 lbm/ft^3 using the maximum values from Table 3-2 of the GR. The bulk density of calcium silicate and calcium silicate with Asbestos is 14.5 lbm/ft^3 and the material density of the individual fibers is 144 lbm/ft^3 per Table 3-2 of the GR. The Transco RMI foils are made of flat 2 mil thick stainless steel, which has a density of 490 lbm/ft^3.

The above densities are used to ensure that the proper materials are used in the bypass and head loss strainer tests.

Specific Surface Areas for Debris

Note: the specific surface area (S_v) was only used for preliminary analytically determined head loss values across a debris laden sump screen using the correlation given in NUREG/CR-6224 (Reference 44). Since the head loss across the installed sump screen is determined via testing, these values are not used in the design basis for FCS. Therefore, these values are not provided as part of this report.

The basis for deviating from the NEI guidance on debris size distribution was provided in the discussions above regarding the use of more representative data based on tests conducted.

3d. Latent Debris

NRC Guidance

The objective of the latent debris evaluation process is to provide a reasonable approximation of the amount and types of latent debris existing within the containment and its potential impact on sump screen head loss.

- *Provide the methodology used to estimate quantity and composition of latent debris.*
- *Provide the basis for assumptions used in the evaluation.*
- *Provide results of the latent debris evaluation, including amount of latent debris types and physical data for latent debris as requested for other debris under c. above.*
- *Provide amount of sacrificial strainer surface area allotted to miscellaneous latent debris.*

OPPD Response

The methodology used to determine the quantity and composition of latent debris is based on the NEI 04-07 GR (Reference 48) as modified by the NRC SER (Reference 49). Specifically, OPPD has developed a procedure for collecting and quantifying debris inside containment (SE-PM-AE-1005, "Latent Debris Collection Inspection"). This procedure is scheduled to be performed every second refueling outage and was used for evaluating containment cleanliness at the end of the 2006 RFO, which consisted of major maintenance activities including steam generator, pressurizer and reactor pressure vessel head replacement.

SE-PM-AE-1005 establishes the areas to be sampled in accordance with Section 3.5.2.2.1 of the GR, taking in consideration the existence of robust barriers and determination of representative surfaces, both horizontal and vertical. This procedure establishes 25 sample location points, including the containment liner, vertical concrete surfaces and vertical piping and consideration of locations that are in the sump flow path. The SER (Reference 49) recommendations for collecting samples that are weighed before and after debris collection, as well as the recommended methods of debris collection have been incorporated in SE-PM-AE-1005.

The composition and properties of the latent debris were determined by analysis performed by Los Alamos National Laboratories (LANL) on a set of latent debris samples collected from the FCS containment during the 2003 RFO. The debris samples were taken mid-outage in areas that were not previously cleaned and appeared to be undisturbed by outage activities. OPPD measured the amount of latent debris per sampling area and recorded this debris load in mass per surface area. The containment sampling for latent debris was performed such that higher-than-average debris loads would be sampled. From Reference 7, it was determined that for FCS, the latent debris is primarily comprised of particulate material. Fibrous material mass made up only about 3% of the total mass of the samples. The LANL report noted that the characteristics of each sample from FCS were quite different from material samples from other plants. Hence, use of a generic debris characterization such as proposed in NEI 04-07 was not prudent or recommended. It was concluded that the weight fractions

determined by LANL should be used explicitly for the FCS latent debris. FCS latent debris samples were characterized by mass as 50.50% particulates, 2.79% fibers, and 46.72% other.

Using the samples collected during the 2003 RFO, the total mass of latent debris calculated to be available for transport was 159 lbs. This value is used in the debris generation calculation (Reference 1). Results of the 2006 RFO latent debris collection procedure showed a total latent debris load of 15.7 lbm, well below the 159 lbs assumed in the debris generation analysis.

In addition to determining the amount of latent debris accumulation on surfaces, other miscellaneous debris sources were accounted for in the debris source term. A survey of containment for these materials was performed during the 2003 RFO. The debris walkdown was performed consistent with the guidance in NEI 02-01 and documented (Reference 2). With respect to this walkdown the following information was recorded:

- Equipment Tags/Labels: Determined the estimated number and location of equipment tags of each material type (paper, plastic, metal) within containment by various locations (see Table 9, Section 3b).
- Tape: Determined the amount and location of each type of tape within containment.
- Stickers or placards affixed by adhesives: Include items such as stickers and signs that are not mechanically attached to a structure or component in the latent debris source term (see Table 9, Section 3b).
- Construction and Maintenance Debris: No construction/maintenance debris was noted.
- Temporary Equipment: Temporary equipment stored inside containment during power operations is controlled procedurally.

The tags that are noted in the table below are valve and equipment tags, which at FCS are a composite ceramic metal tag, qualified for design basis accident (DBA) conditions. Since these tags are engineered for DBA conditions and affixed with stainless steel braided wire or bands, only 10% of the tags and pipetags that are outside a break ZOI will be included as potential debris. All equipment and piping tags within one SG bay are assumed to be destroyed. The stickers are a plastic/fibrous type material and will be considered as a debris source term. Table 14 below identifies those materials that will be further considered as debris source terms potentially transported to the sump screen.

Table 14
Quantity of Debris Generated Equipment Labels
(available for transport)

TYPE OF MISCELLANEOUS DEBRIS	QUANTITY FT^2
Tags	19.4
Stickers	22.5
Pipetags	19.6
Metal Tags	1.6
Placards	1.6
Labels	6.3
Total	**71.0**

Based on the above evaluation, the sacrificial area of each new strainer was established at 75% of the total area noted in Table 14 above that could be transported to the sump strainers (due to overlap).

3e. Debris Transport

NRC Guidance

The objective of the debris transport evaluation process is to estimate the fraction of debris that would be transported from debris sources within containment to the sump suction strainers.

- *Describe the methodology used to analyze debris transport during the blowdown, washdown, pool-fill-up, and recirculation phases of an accident.*
- *Provide the technical basis for assumptions and methods used in the analysis that deviate from the approved guidance.*
- *Identify any computational fluid dynamics codes used to compute debris transport fractions during recirculation and summarize the methodology, modeling assumptions, and results.*
- *Provide a summary of, and supporting basis for, any credit taken for debris interceptors.*
- *State whether fine debris was assumed to settle and provide basis for any settling credited.*
- *Provide the calculated debris transport fractions and the total quantities of each type of debris transported to the strainers.*

OPPD Response

The methodology used to analyze debris transport is based on the NEI 04-07 GR (Reference 48) for refined analyses as modified by the NRC's SER (Reference 49), as well as the refined methodologies suggested by the SER in Appendices III, IV, and VI. The specific effect of each mode of transport was analyzed for each type of debris generated, and a logic tree was developed to determine the total transport to the sump screens. The purpose of this approach is to break a complicated transport problem down into specific smaller problems that can be more easily analyzed. The logic tree approach is used for each type of debris. The size distribution and characterization for the specific debris types come from the debris generation calculation. A generic transport logic tree for a four-category size distribution is shown in Figure 5 below.

The logic tree approach can be used for each type of debris. The size distribution and characterization for the specific debris types come from the debris generation calculation (Reference 1). The logic tree shown in Figure 5 below is somewhat different from the baseline logic tree provided in the NEI 04-07 GR (Reference 48). This departure was made to account for certain non-conservative assumptions identified by the SER including the transport of large pieces, erosion of small and large pieces, the potential for washdown debris to enter the pool after inactive areas have been filled, and the direct transport of debris to the sump screens during pool fill-up. Also, the generic logic tree was expanded to account for a more refined debris size distribution. (Note that some branches of the logic tree may not be required for certain debris types.)

The methodology is based on a pipe break in a highly compartmentalized containment that occurs at the bottom of the compartment. For breaks that are not located in the

bottom of the compartment or on the upper portion of a compartment, the mostly un-compartmentalized containment values are used. The main steam line break and the main feedwater line break were evaluated in the debris generation calculation and it was determined that ECCS recirculation as a means of long term core cooling was not required and hence, those breaks do not require further assessment.

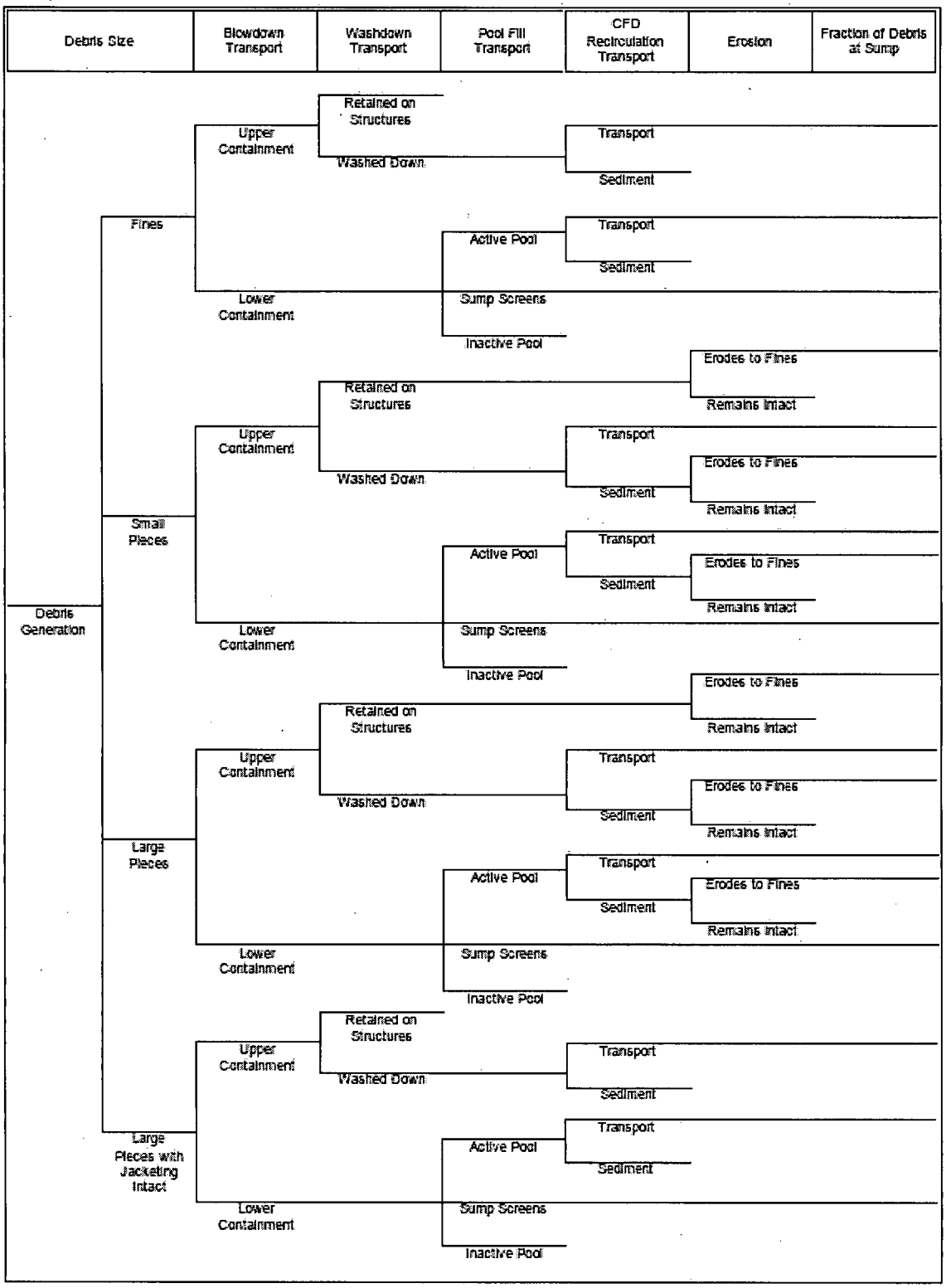

Figure 5
Generic debris transport logic tree

The following steps outline the basic methodology used for the FCS transport analysis:

1. Based on the containment building drawings a three-dimensional model was built using computer aided drafting (CAD) software. The CAD drawings were used to determine vertical and horizontal surface areas in the upper and lower containment.
2. Potential upstream blockage points including screens, fences, grating, drains, etc. that could lead to water holdup are addressed below.
3. Debris types and size distributions were gathered from the debris generation calculation for each postulated break location.
4. The fraction of debris blown into upper containment was determined based on the FCS specific containment geometry. Since the blowdown would relieve to all areas of the containment building, the fraction of blowdown flow to various regions can be reasonably estimated using the relative volumes of containment.
5. The quantity of debris washed down by containment sprays is not relevant, as the FCS design basis will not have spray initiation on LOCA.
6. The quantity of debris transported to inactive areas or directly to the sump screens was calculated based on the volume of the inactive cavities proportional to the water volume at the time these cavities are filled. All non-insulation material in the ZOI, including coatings within the coatings ZOI will be assumed to transport similar to the small fines of fibrous, Cal-Sil material. All debris from materials outside the ZOI is considered to be in the active and inactive volumes of the pool at the start of recirculation and 90% transported by the active volumes of the pool to the sump. Latent debris (tags, labels, dirt/dust) is also considered to be to be in the active and inactive volumes of the pool at the start of recirculation and 90% transported by the active volumes of the pool to the sump.
7. FLOW-3D® (a CFD computational computer code), was utilized for all transport calculations and has been verified and validated by Alion Science for use in transport methodologies.
8. A graphical determination of the recirculation transport fraction of each type of debris was made using the velocity and turbulent kinetic energy (TKE) profiles from the CFD model output, along with the determined initial distribution of debris.
9. The quantity of debris that could experience erosion due to the break flow was determined.
10. Unqualified coatings transport to strainer was addressed in the transport calculation.
11. Sand transport from a reactor nozzle break was addressed in the transport calculation.
12. The overall transport fraction for each type of debris was determined by combining each of the previous steps in logic trees.

Blockage of Debris

As shown in Figure 6, below, the lower containment at FCS is made up of a bioshield area and area outside the bioshield. The area inside the bioshield, is

compartmentalized into two distinct steam generator bay areas. On the right side of Figure 6 is the A SG bay area, and on the left side of Figure 6 is the B SG bay area. The bay areas are not connected to each other at the basement floor elevation, hence water or debris that is generated in one bay area cannot flow or transport directly to the other one. There are two distinct entrances to the bay areas. Each entrance has a key locked chain link fence type door. There are gaps at the bottom of each screened door and on the sides (5" x 38"). Given the size of these openings, it is not likely that debris would block the openings sufficiently to prevent water from reaching the sump. The depth of the FCS sump pool is fairly significant (at least 4'). For any debris trapped at the bottom of the chain link door, water would flow over the top of the debris. The entrance to the reactor cavity is not inside these bay areas, any water entrained with debris that would get to the reactor cavity shaft would not be held up and would spill over.

Blockage in the refueling canal is not an issue for FCS; with a no-spray configuration there will not be any significant water flow into the refueling canal.

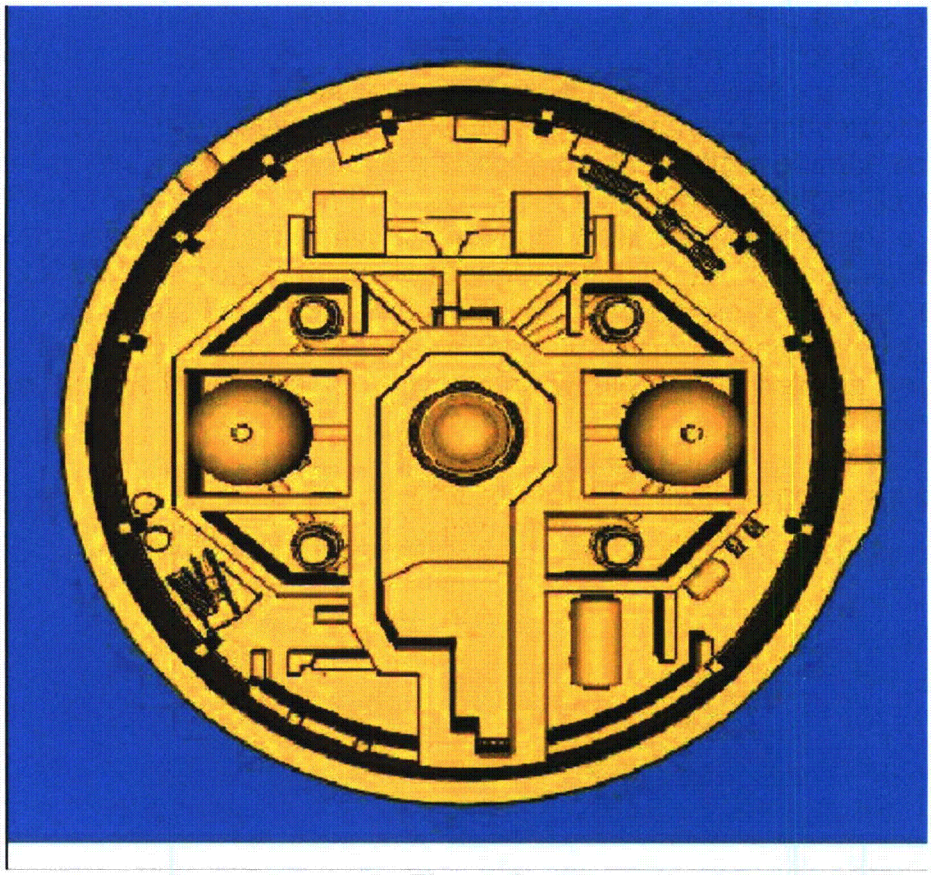

Figure 6
Fort Calhoun Station Containment Geometry

Erosion of Fibrous or Cal-Sil insulation

Erosion of small and large pieces of fibrous insulation is accounted for. Erosion of fibrous insulation is assumed to be at 10% of small and large pieces of fibrous debris and that erosion of debris is transported directly as fines to the strainer without further credit of sedimentation or settling. A 10% erosion fraction was proposed to the NRC during the pilot plant audit process and was considered appropriate. Erosion of small pieces of Cal-Sil insulation is accounted for. Erosion of Cal-Sil insulation was based on actual hydraulic lab testing (Reference 20) and was predicted to be conservatively bounded at 15%. Thus, small pieces of Cal-Sil will be subjected to an erosion fraction of 15% as fines to the strainer without further credit of sedimentation or settling. This is considered conservative as with the significantly low flow pool condition, some of these eroded fibers and Cal-Sil fines could settle out before reaching the strainer.

CFD Analysis and Transport during Recirculation

The CFD calculations for recirculation flow in the FCS containment pool were performed using Flow-3D® Version 9.0 with an Alion modified subroutine. The following general steps were taken in modeling the debris transport during the recirculation phase after a postulated LOCA at FCS:

1. Based on the containment building drawings, a three-dimensional (3-D) geometric model of the containment floor was built using CAD software.
2. A computational mesh was generated that sufficiently resolved the key features of the CAD model, but maintained a cell count low enough for the simulation to run in a reasonable amount of time.
3. The dimensions of the solid objects resolved in the computational mesh were checked with the appropriate drawings to verify the accuracy of the model.
4. The boundary conditions used in the CFD model were set based on the operation of FCS during the recirculation phase.
5. At the determined LOCA break location, a mass source was added to account for introduction of the break flow.
6. A negative mass source (mass sink) was added at the sump screen location with a total flow rate equal to the recirculated break flow exiting the postulated ruptured pipe.
7. Appropriate turbulence modeling was enabled.
8. After running the CFD calculation, the kinetic energy averaged across the pool was checked to verify that it was no longer changing significantly, indicating that the case had run long enough to reach steady-state flow conditions.
9. Transport metrics were determined based on relevant tests and calculations for each significant debris type present in the FCS containment building were performed.
10. A graphical determination of the transport fraction of each type of debris was made using the velocity and TKE profiles from the CFD calculation.

With no spray flow, the low sump flow results in pool regions with very low velocity (see Figure 7 below) and respective TKEs (see Figure 8 below). Using the standard methodology, no transport of macro debris including RMI, LDFG, Temp-Mat® and paint

chips and low transport fraction of individual fibers were predicted. To avoid calculation uncertainty for the low velocity case, the standard methodology was adjusted to estimate the fine debris transport. It was assumed no transport of fine debris occurred in pool regions with predicted velocities less than the predicted velocities of 0.01 ft/s. The capabilities of Flow-3D® predicting the velocities greater than 0.01 ft/s were validated in a low velocity test carried out in ALION's transparent flume.

The justification of this assumption is as follows:

- Based on the corresponding settling velocities and required TKEs, all fine debris originally were assumed to transport under normal recirculation conditions that have spray flow.
- The transport metric based on very low velocities found in no-spray flow cases results in low transport of fine debris (see Figure 8 below). The pool region showing the iso-surface of required TKE to suspend individual fibers is shown in Figure 8 below, which indicates very low transport or high settling of the individual fibers.
- Based on the truncation error in finite difference equations (FDEs) and the round off error by the computer, the lowest velocities with significance in CFD prediction are expected to be greater than 10^{-4} ft/s.
- Concerns expressed by OPPD and the NRC for this condition led to related experimental work to validate CFD predictions for low velocity conditions. It was shown that FLOW-3D® is capable of predicting low velocities greater than 0.01 ft/s (Reference 21) (See Figure 9 below). It takes low velocities and turbulent kinetic energy to transport fine debris. These validated CFD predicted velocities are sufficiently large to transport fine debris.
- The characteristic velocity in the flow region of the containment pool has the magnitude of 0.01 ft/s (see Figure 9 below). The stagnant regions are separated from the sump by the regions where the velocities are less than 0.01 ft/s.

Therefore, it was assumed that no transport of fine debris occurs in pool regions with predicted velocities less than 0.01 ft/s. These regions are considered stagnant regions. The flow regions identified in Figure 9 are substantially larger than the continuous yellow iso-surface regions shown in Figure 8. Therefore, this assumption is conservative.

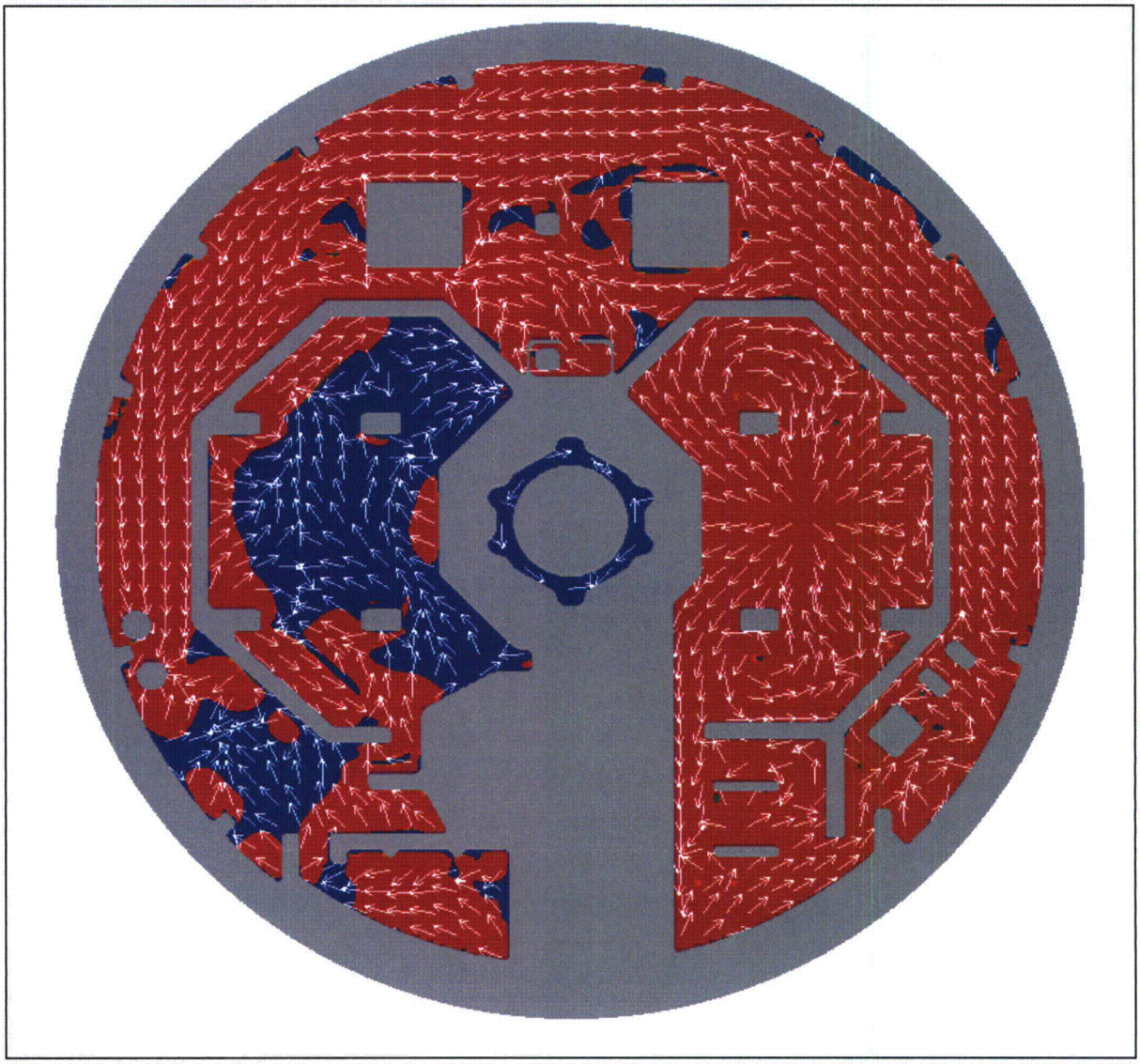

Figure 7
Pool velocity above containment floor (No-spray case, Break in A SG bay)

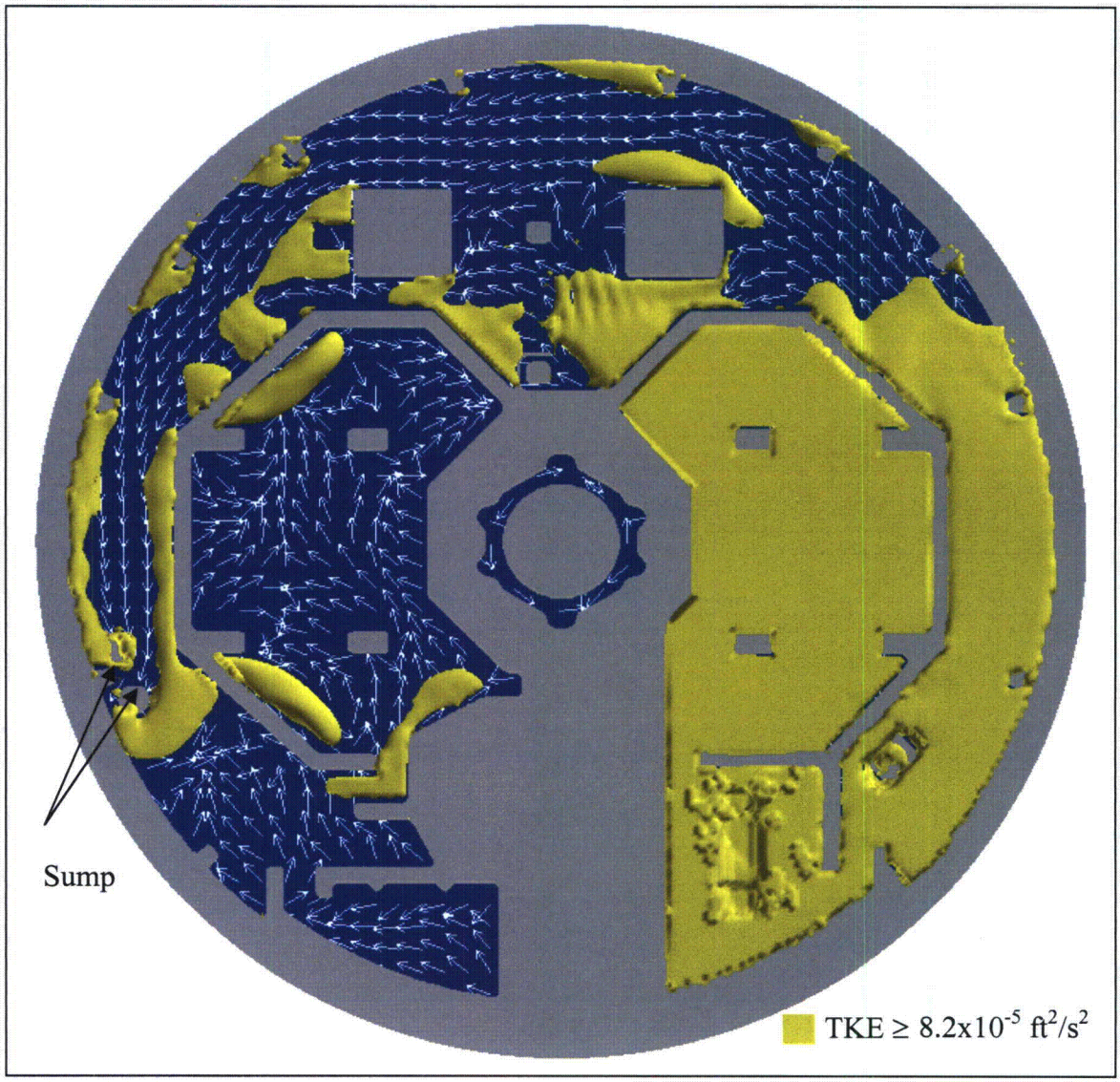

Figure 8
TKE required to suspend individual fiber (No-spray case, Break in A SG bay)

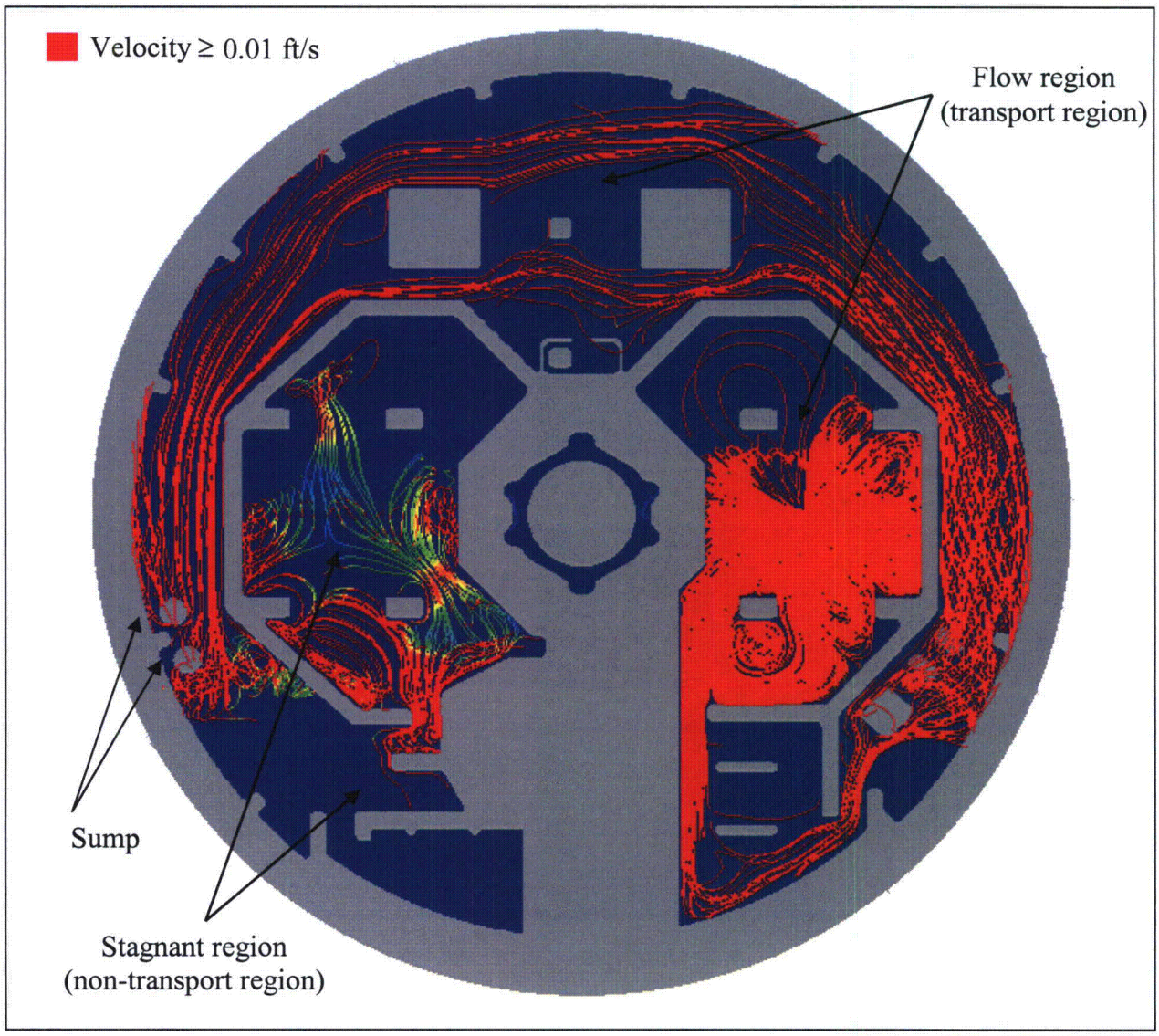

Figure 9
Flow streamlines in the containment pool illustrated by releasing massless particles from Compartments A and B (No-spray case, Break in A SG bay)

Unqualified Coatings

The majority of unqualified coatings in the FCS containment are located at elevations well above the basement floor at elevation 994'. These coatings, should they fail post-DBA, would fail near the component they were applied to and as such, would fall to the concrete slab floor immediately below that component. As can be seen in Figures 10 and 11 below, the FCS containment is comprised predominantly of concrete slab floors at the upper elevations. Thus, if coatings failed they would most likely reside on the component or near it and not fall through gratings. Also since FCS will not employ containment spray post-LOCA ,there will be no motive force for sliding or driving failed coatings to subsequent lower elevations. Without spray washdown, there would be no water sheeting action to move coatings towards gratings or openings or stairwells and no significant movement of failed unqualified coatings to lower elevations or ultimately to the containment basement floor. Therefore, the failure of unqualified coatings needs only to be evaluated on the containment basement elevation 994'.

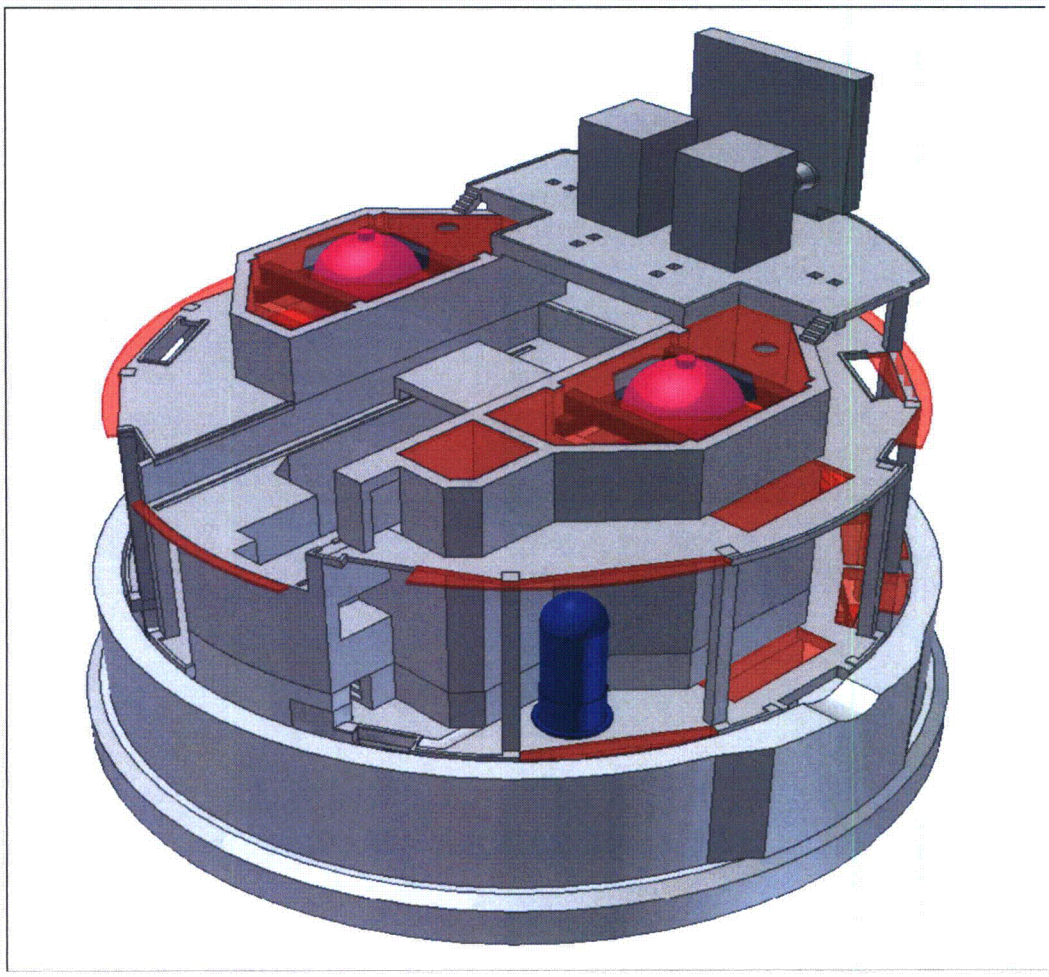

Figure 10
Upper Containment

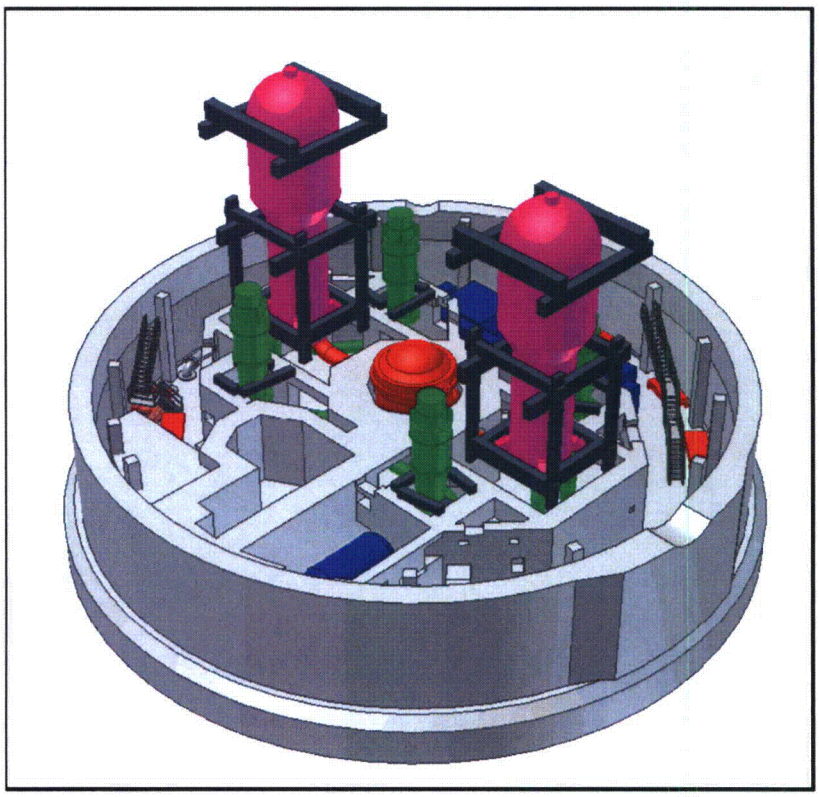

Figure 11
Lower Containment

The location, area and measured thickness of each source of unqualified coatings was documented in the 2003 NEI walkdown report (Reference 2). The documentation also specifies what type of coating, (zinc chromate, etc.) and to what component the coating was applied. Thus, there is an inventory of all unqualified coatings by type, location, elevation, area and thickness. Using this safety related inventory, an assessment was performed. The unqualified coatings were specified by potential location to a break in the A or B SG Bay areas. A disposition or justification of transport of unqualified coatings if any was provided. Note that the recirculation CFD results indicate that there would be no transport of any failed unqualified coating chips. However, it is readily shown that some of these unqualified coatings are near the strainer locations or could be swept to the strainers as a result of the break fill-up sheeting action. As such, the assessment identifies the location of unqualified coatings by elevation, component, thickness and area, and then documents if that source of unqualified coatings would be transported to the sump strainers or not.

Sand Transport

Sand boxes are located near the reactor vessel nozzles. As a result of a nozzle break, it was calculated that approximately 32.81 ft^3 of sand would be ejected into a SG bay

area depending on the location of the nozzle break. Both SG bay locations were evaluated for sand transport considerations.

It was assumed that the sand in the sand boxes, which is used for shielding, is the type of sand found in the bed of the Missouri River as it was readily available at the site when the plant was built. Based on sampling of local riverbed sand, the mean size of the sand grains was noted to be 0.3mm (300 μm). The sand size distribution had a very tight band around this mean diameter.

The settling velocity for grain sand and the TKE for keeping it in suspension are relatively high numbers. Thus, the pool bulk velocities and turbulence would need to be fairly significant to keep the sand in suspension for available transport. The CFD run for no-spray case was used to determine how much area within the containment pool would have the necessary TKE or velocity profiles for movement of sand during recirculation phases. It was determined that for a break in the B SG bay, 38% of the sand mass would be transported to the suction piping location. Since the actual strainer location would be closer to the B SG bay opening it is assumed for purposes of this calculation that 100% remains in suspension during recirculation and available at the strainer screen. The results for a break in the A SG bay indicated that only 17% of the initial mass of sand could potentially be transported to the strainer. A logic tree specific for sand transport was prepared for both the A and B SG bay break locations.

Debris Transport Results

Breaks in the RCS with the largest potential for debris are shown in Tables 15 and 16 below:

Table 15
Large Break LOCA Total Debris Load at Strainer (RC-2A)

Debris Type	Debris Transport Fraction	Debris Quantity at Strainer
Stainless Steel RMI	0%	0 ft^2
NUKON® and LDFG	8%	10.5 ft^3
Temp-Mat®	6%	7.4 ft^3
Cal Sil	19%	8.3 ft^3
Cerafiber®	100%	0.6 ft^3
Qualified Epoxy Coatings	23%	17.3 lbm
Unqualified Coatings	*	215.7 lbm
Dirt/Dust	65%	52 lbm
Latent Fiber	65%	3 lbm
Other Debris	65%	49 lbm
Stickers, Tapes, Labels	100%	71 ft^2

* The amount of unqualified coatings is dispositioned per Attachment D of Reference 52

Large breaks with two or more different types of debris:

Table 16
Large Break LOCA Total Debris Load at Strainer (RC-3A)

Debris Type	Debris Transport Fraction	Debris Quantity at Strainer
Stainless Steel RMI	0%	0 ft^2
NUKON® and LDFG	7%	6.2 ft^3
Temp-Mat®	8%	3.9 ft^3
Cal-Sil	19%	2.9 ft^3
Cerafiber®	100%	0.6 ft^3
Qualified Epoxy Coatings	23%	17.3 lbm
Unqualified Coatings		215.7 lbm
Dirt/Dust	65%	52 lbm
Latent Fiber	65%	3 lbm
Other Debris	65%	49 lbm
Stickers, Tape, Labels	100%	71 ft^2

The SBLOCA case assumes a 100% debris transport as it was designated as a break that could potentially fail near the sump strainers. As such the debris quantity that was

calculated from the debris generation calculation would be predicted to be at the strainer. The amount of debris in the event of a SBLOCA would then equate to what was calculated from debris generation calculation and shown in Table 17 below.

Table 17
SBLOCA results

Debris Type	Mass or Volume
LDFG (fines)	0.98 ft^3
Cal-Sil (fines)	0.71 ft^3
Unqualified Coatings	22.3 lbm
Qualified Coatings	2 lbm
Particles Latent Debris	40.2 lbm
Fiber Latent Debris	2.2 lbm
Other Latent Debris	37.2 lbm
Stickers, Tape, Labels	71 ft^2
Sand	0 lbm

Table 18 below shows the results of a break at the reactor vessel nozzles, which addresses sand transport.

Table 18
RV Nozzle Break Results

Debris Type	Debris Transport Fraction	Mass or Volume
LDFG (fines)	23%	1.8 ft^3
Stainless Steel RMI	0%	0 ft^2
TempMat®	8%	0.9 ft^3
Cal-Sil (fines)	19%	7.8 ft^3
Unqualified Coatings	100%	215.7 lbm
Qualified Coatings	23%	2 lbm
Particles Latent Debris	100%	80.3 lbm
Fiber Latent Debris	100%	4.4 lbm
Other Latent Debris	100%	74.3 lbm
Stickers, Tape, Labels	100%	71 ft^2
Sand (A or B nozzle break)	Varies by break*	121 lbm A side 710 lbm B side

*A break in a penetration that is adjacent to the A SG bay results in sand debris that is blown into the A SG bay, and then subject to transport to the sump strainer. A break in a penetration that is adjacent to the B SG bay results in sand debris that is blown into the B SG bay, and then subject to transport to the sump strainer. A nozzle break on the B SG bay side results in debris that is blown into the bay area that is closest to the sump strainer.

No credit was taken for any debris interceptors at FCS, as they are not installed in containment. Hence, the tables provided above identify the total quantities of each type of debris transported to the strainers for the breaks analyzed.

3f. Head Loss and Vortexing

NRC Guidance

The objectives of the head loss and vortexing evaluations are to calculate head loss across the sump strainer and to evaluate the susceptibility of the strainer to vortex formation.

- *Provide a schematic diagram of the emergency core cooling system (ECCS) and containment spray systems (CSS).*
- *Provide the minimum submergence of the strainer under small-break loss-of-coolant accident (SBLOCA) and large-break loss-of-coolant accident (LBLOCA) conditions.*
- *Provide a summary of the methodology, assumptions and results of the vortexing evaluation. Provide bases for key assumptions.*
- *Provide a summary of the methodology, assumptions, and results of prototypical head loss testing for the strainer, including chemical effects. Provide bases for key assumptions.*
- *Address the ability of the design to accommodate the maximum volume of debris that is predicted to arrive at the screen.*
- *Address the ability of the screen to resist the formation of a "thin bed" or to accommodate partial thin bed formation.*
- *Provide the basis for the strainer design maximum head loss.*
- *Describe significant margins and conservatisms used in the head loss and vortexing calculations.*
- *Provide a summary of the methodology, assumptions, bases for the assumptions, and results for the clean strainer head loss calculation.*
- *Provide a summary of the methodology, assumptions, bases for the assumptions, and results for the debris head loss analysis.*
- *State whether the sump is partially submerged or vented (i.e., lacks a complete water seal over its entire surface) for any accident scenarios and describe what failure criteria in addition to loss of net positive suction head (NPSH) margin were applied to address potential inability to pass the required flow through the strainer.*
- *State whether near-field settling was credited for the head-loss testing and, if so, provide a description of the scaling analysis used to justify near-field credit.*
- *State whether temperature/viscosity was used to scale the results of the head loss tests to actual plant conditions. If scaling was used, provide the basis for concluding that boreholes or other differential-pressure induced effects did not affect the morphology of the test debris bed.*
- *State whether containment accident pressure was credited in evaluating whether flashing would occur across the strainer surface, and if so, summarize the methodology used to determine the available containment pressure.*

OPPD Response

Figure 12 below shows a schematic of the ECCS and the CSS. Fully redundant suction paths are provided from the containment sumps to the safety injection and containment spray pumps. Post-RAS, two HPSI pumps and one CS pump take suction from one header while one HPSI pump and two CS pumps take suction off the other header.

Presently, only one HPSI pump, one low pressure safety injection (LPSI) pump and one CS pump per header receive an automatic start signal. Following implementation of LAR-07-04, only the HPSI and LPSI pumps will start during a LOCA and only the HPSI pumps will operate post-RAS.

Minimum Submergence

The minimum submergence of the strainers under SBLOCA conditions is 4.2 inches and under LBLOCA conditions is 10.8 inches. The 10.8 inches assumes use of the CSS and accounts for water draining into the containment basement. Without spray initiation, the minimum water level will be higher.

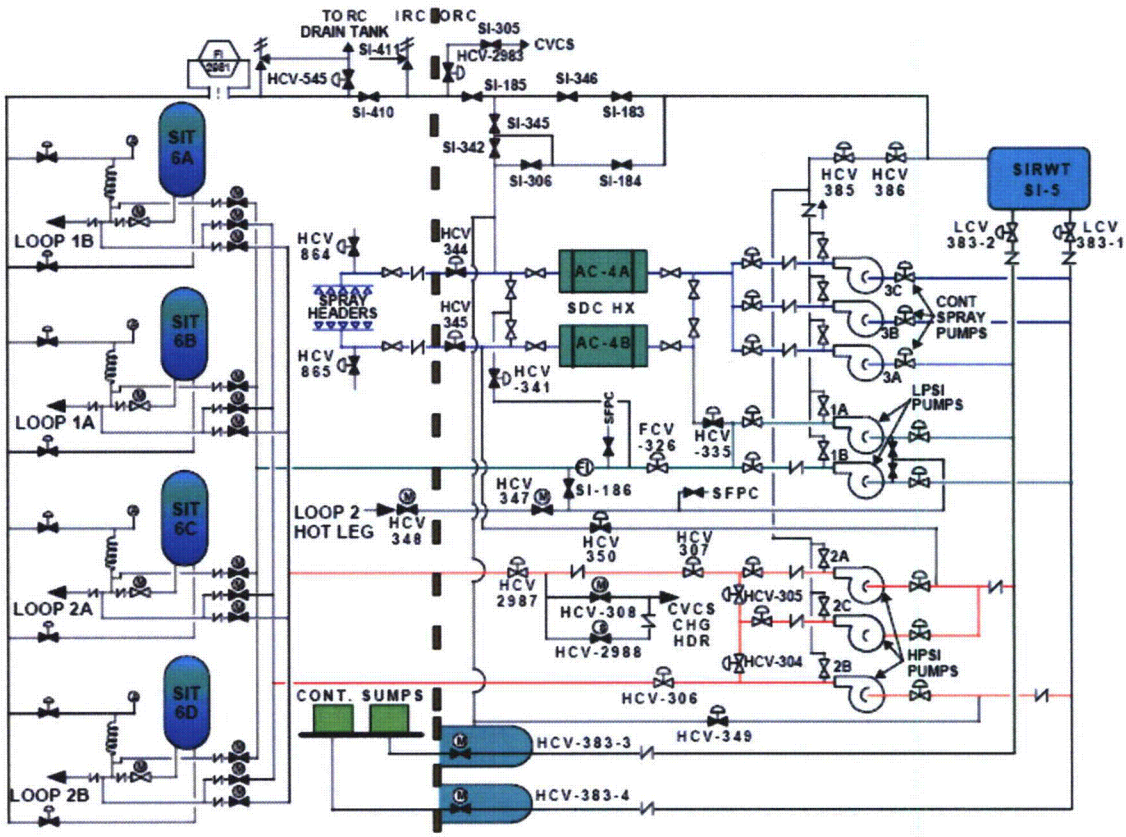

Figure 12
Fort Calhoun Station ECC and CS Schematic

Vortexing Evaluation

Vortexing evaluation was conducted during each strainer module test discussed below. Following completion of each head loss test, the water level in the test tank was lowered until observing the onset of vortexing and air ingestion. Vortexing was not observed. Air ingestion was observed when the water level was 0.25 inch below the top of the strainer. In addition, the possibility of air ingestion at the strainers was evaluated with the conclusion that there was a large margin to vortex formation and air ingestion

despite the use of conservative assumptions regarding the approach velocity at the strainer surface.

Prototypical Head Loss Testing for the Strainer

Prototypical head loss testing was conducted using module testing (Reference 26). A module test is a head loss test that uses multiple disk sets to simulate a full size strainer. The debris load and flow rate are scaled to simulate plant conditions.

The test module used for all tests except the LBLOCA chemical precipitant test, consists of 15 strainer plates, which are of the same length and width as the plant strainer plate, which is 48" by 33". A sketch of the test module is shown in Figure 13 below. All of the dimensions of the strainer plates including the perforated plate, wire cloth dimensions and internal framework are the same for the test article as they are for the plant strainer. Any differences between the test and plant strainer are noted below:

- For the test module, the outer surface of the disks at each end of the test module are solid sheet material and not perforated plate/wire cloth. These outer test disk frames are half thickness (1/4") in order to model the flow in the frame cavity that represents flow approaching only from the inner surface of each disk. The test module is mounted on a frame, which is prototypical of the plant configuration.
- The perforated plate thickness for the test module is 0.046" compared with the plant perforated plate thickness of 0.059". This thinner perforated plate was evaluated and shown to be acceptable to handle the expected test conditions without structural damage. This difference has no effect on hydraulic performance.
- The inner cavity diameter is the same for both the test article and plant strainer. The resulting clean head loss from the test article inner cavity will be less than the plant strainer inner cavity clean head loss due to the reduced flow rate and reduced length of the inner cavity in the test. For the clean head loss evaluation, the measured clean head loss from the test is assumed to be due to only the strainer disks and ignores the contribution from the inner cavity. The head loss for the inner cavity is calculated and added to the measured clean head loss to determine a conservative clean head loss for the strainer.

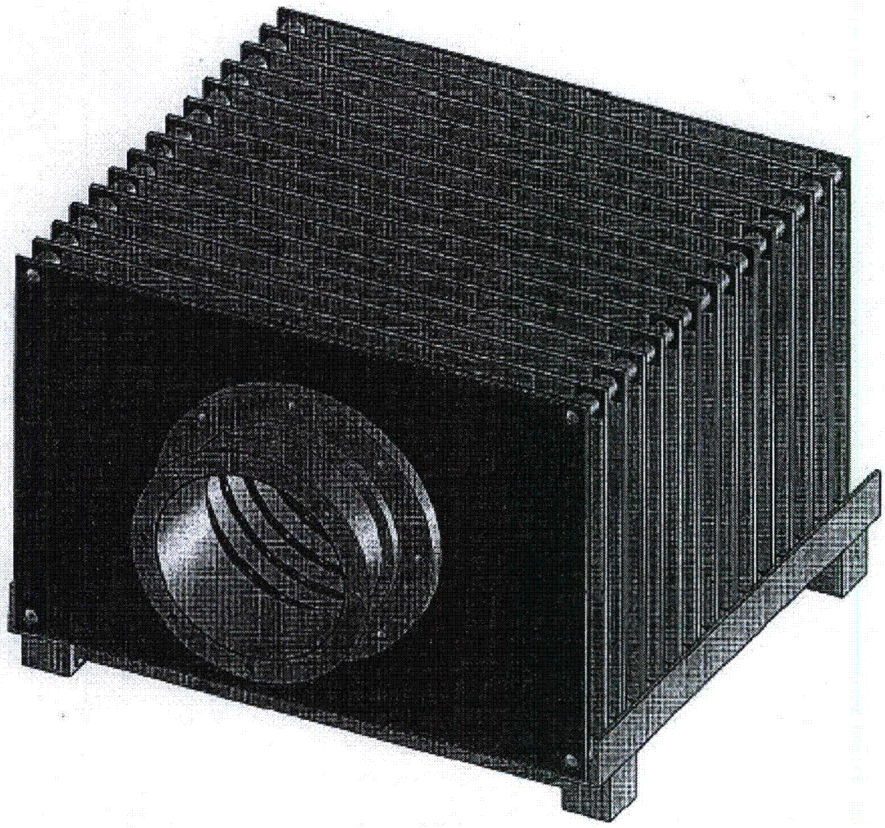

Figure 13
Test Module (15 Disk)

For the LBLOCA chemical precipitant test, the module test article was reconfigured so to have two (2) half disks at the ends (perforated on only the inside) and four (4) full disks in between. The disks were mounted on the suction side of the module. The reduced strainer size was necessary to maintain the correct scaling between test and plant parameters due to the large amount of LBLOCA chemical precipitants that are added to the test.

The schematic of the tank for the LBLOCA module tests is included in Figures 14 and 15 below. The module is mounted as shown in Figure 15. The module is mounted 5.6" from one wall to simulate the distance between the FCS as–installed plant strainer and the containment wall. The distance between the walls mounted in the test tank results in the test approach velocity in the annulus area equaling the plant approach velocity in the containment annulus. Suction is taken from the module and the return flow enters the tank through a discharge header as shown in Figure 14.

The agitators that are shown in Figures 14 and 15 are intended to ensure that debris settling is minimized in those areas of the test tank outside the simulated bioshield wall near where field settling is not being credited.

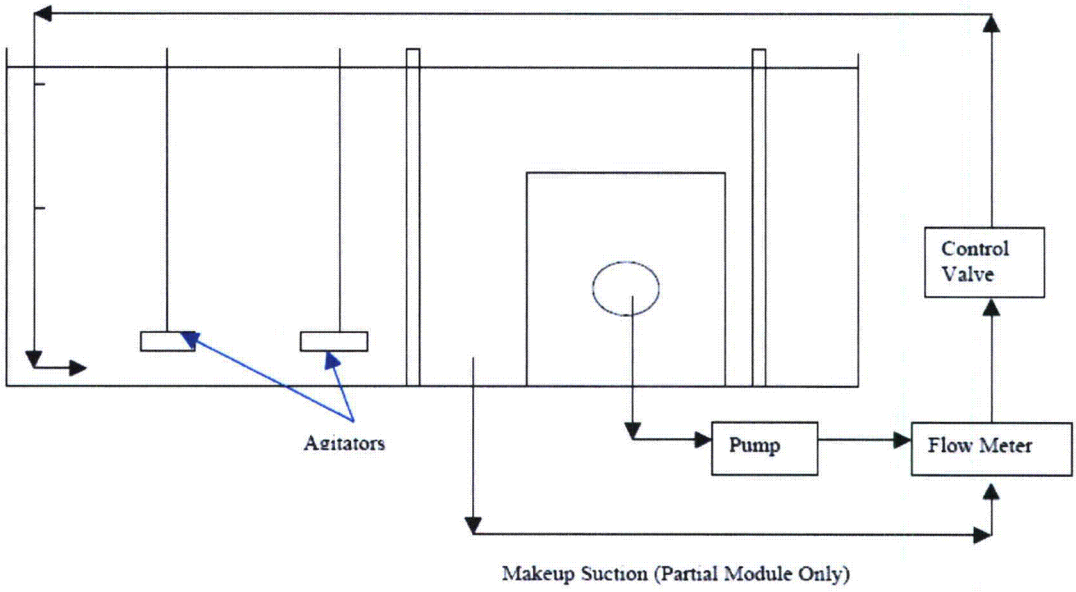

Figure 14
Module Test Configuration (Elevation View)

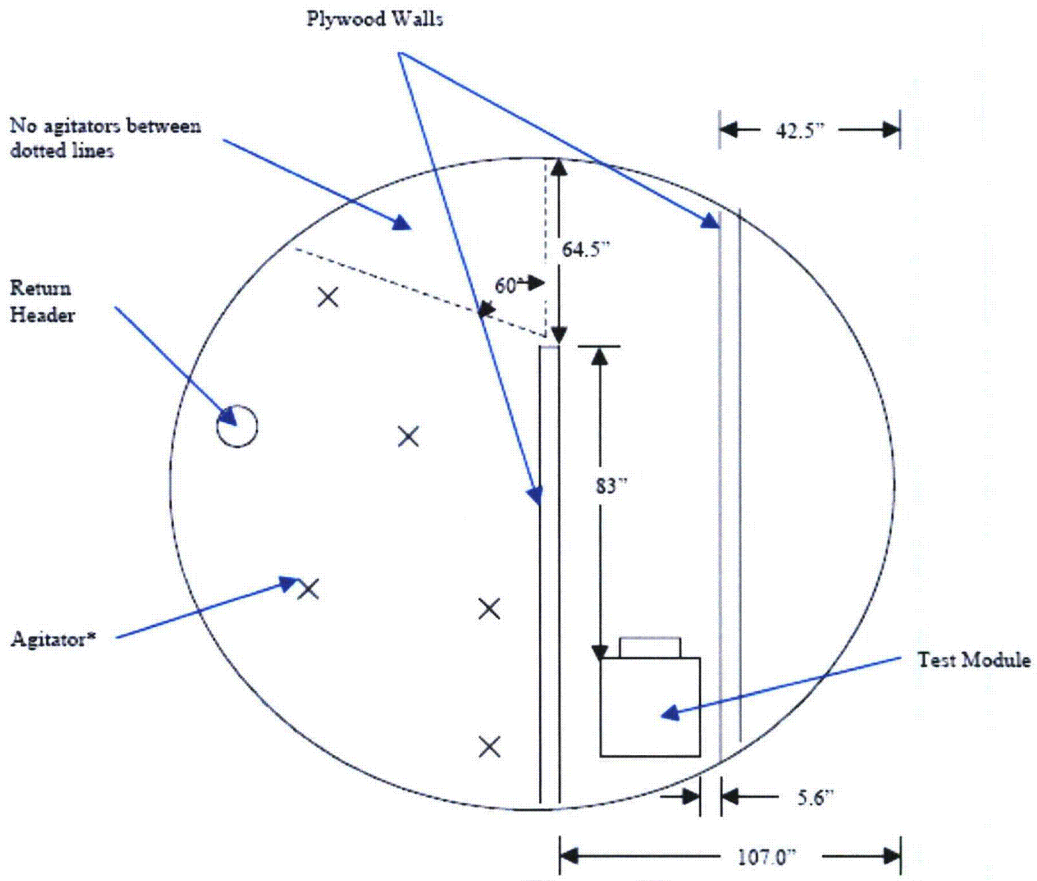

Figure 15
Module Test Configuration (Plan View)

For the SBLOCA, a different test setup was used from the LBLOCA. The small line break location at FCS is located such that the debris transport for Strainer "B" will be bounded by the LBLOCA transport to Strainer "A". The LBLOCA test configuration is conservative for the SBLOCA configuration for Strainer "B" and the LBLOCA debris loads bound the SBLOCA. Therefore, the test results for the LBLOCA which models Strainer "B" will bound the SBLOCA for that strainer.

For Strainer "A" there will be a direct path between the break location and the strainer. Consequently, testing for this strainer did not credit near field settling and was well mixed in front of the strainer. Figure 16 below is a plan view of the test setup for the SBLOCA break scenario.

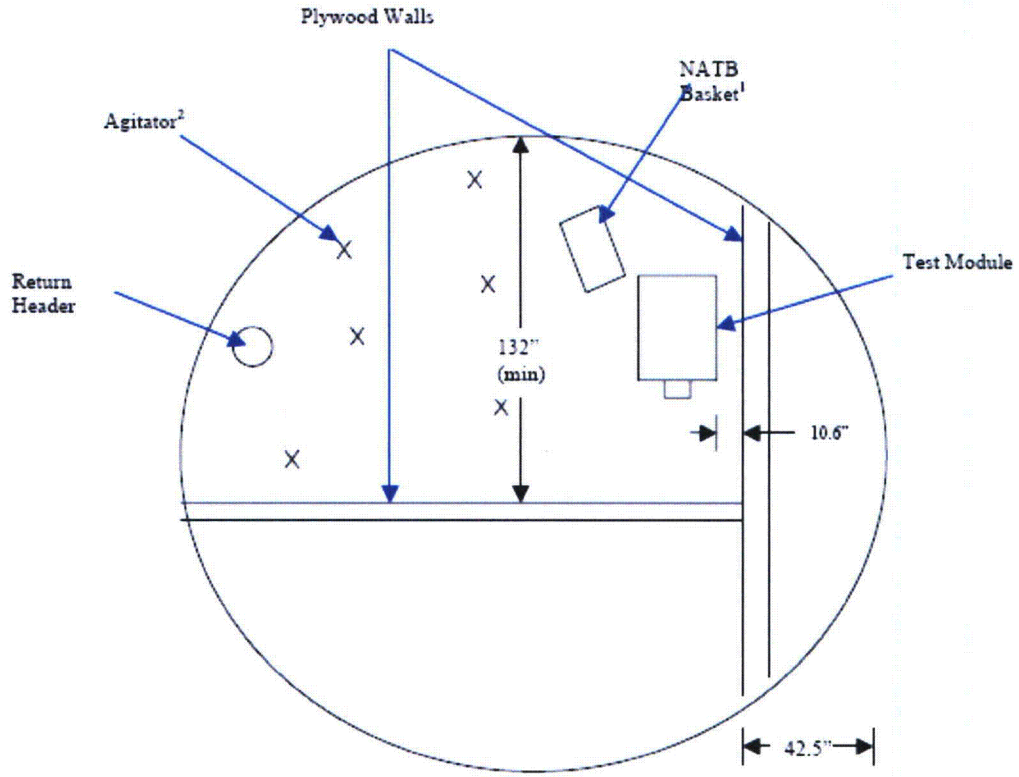

[1] NaTB basket to be positioned approximately as shown.
[2] Agitators locations shown for reference only.

Figure 16
SBLOCA Test Setup (Plan View)

The water level in the test tank was maintained at 4 feet, which represents the height of the test tank. This water level reflects a strainer submergence of 10.6" for the LBLOCA test. This is slightly lower than the plant submergence of 10.8" for the LBLOCA. The water level in the test tank for the SBLOCA was maintained such that the maximum submergence of the test article was 4.2" consistent with the plant submergence in a spray configuration, and is considered conservative. A no-spray configuration would have more water submergence.

The flow rates for the module tests can be calculated using Equation 1 below. By using this equation, the test approach velocity through the open perforated plate is the same as the approach velocity for the plant.

As shown in Equation 1, the perforated area of the plant strainer is reduced by the sacrificial area, which represents labels blockage.

$$Q_{moduletest} = Q_{TrainAorB} \times \frac{Area_{perforated\ module}}{Area_{perforated\ plant} - 0.75 * Area_{label}} \qquad \text{Equation (1)}$$

where

$Q_{moduletest}$ = Module test flow rate (gpm)
$Q_{TrainAorB}$ = Plant flow rate for Train A or Train B (gpm)
$Area_{perforated\ module}$ = Module unblocked perforated surface area (ft^2)
$Area_{perforated\ plant}$ = Train A strainer unblocked perforated surface area (ft^2)
$Area_{label}$[1] = Total labels surface area (ft^2)

1 = Total labels to the strainer surface area (ft^2)

The debris quantities in the module test matrix were calculated using the limiting case debris loads which yield the same debris bed thickness for the module test as in the installed plant strainer. The test debris load is calculated based on Equation 2 below.

$$Mass_{debris.module} = Mass_{debris.Generated} \times \frac{Area_{perforated.moduletotal}}{Area_{perforated.planttotal} - 0.75 * Area_{label}} \qquad \text{Equation (2)}$$

where

$Mass_{debris.module}$ = Mass of debris in the module test matrix (lbs)
$Mass_{debris.Generated}$ = Mass of debris that is generated during a worst-case LOCA (lbs)
$Area_{perforated.planttotal}$ = Total installed strainer perforated surface area (ft^2)
$Area_{perforated.moduletotal}$ = Total test module perforated surface area (ft^2)
$Area_{label}$ = Total labels surface area (ft^2)

As with the test flow rate, the test debris loads are scaled for the as-installed strainer.

The debris being added to the test was wetted prior to introduction into the test pool. Water was added from the test tank to containers of prepared debris to achieve a slurry mixture. The particulate slurry was added to the tank/pool and thoroughly mixed to minimize settling. The particulate debris was added to the test tank in its entirety at the beginning of each test, after starting the pumps. Fibrous insulation was introduced into the tank/pool after the particulate debris. The fiber is added to the tank/pool in a manner to simulate the initial concentration of fiber in the plant pool at the start of recirculation. The fiber was introduced over a period of time, which corresponds to the time required for the plant fiber concentration to decrease by approximately 80% based on an assumed exponential function. The fiber was divided into equal amounts and added to the test tank such that the amount of fiber introduced into the test tank at each interval provides a fiber concentration in the test, which is the same as the

concentration of fiber in the plant at the start of recirculation. After the last fiber addition, the head loss was allowed to reach termination.

For the LBLOCA tests involving the addition of chemical effects debris, the water level in the test tank was lowered by an amount corresponding to the volume of chemical effects solution to be added. The chemical effects solution was then added to the tank in 4 equal additions, with each addition being 25% of the total. After the addition of each 25% increment of chemical effects debris, the head loss was allowed to come to termination.

For the SBLOCA tests involving the addition of chemical effects debris, the water level in the test tank was lowered by an amount corresponding to the volume of chemical effects solution to be added. The chemical effects solution was then added to the tank in 4 equal additions, with each addition being 25% of the total. After the addition of each 25% increment of chemical effects debris, the head loss was allowed to come to termination.

The debris generation calculation showed all qualified coatings to be fine particulate debris with particle size on the order of 10 micron diameter. This debris was simulated in the test with Electro Carb® black silicon carbide. The Electro Carb® black silicon carbide particle size (10 micron diameter) and density are adequate to represent coatings which fail as particulate. For the purposes of LBLOCA testing, the unqualified coating debris (i.e. paint chips) is assumed to be zero based on the transport analysis. For the SBLOCA test, the transport analysis identifies that all of the unqualified coatings that reach the strainer are paint chips. The paint chips were fabricated by painting plastic sheets, peeling the paint off the sheets, breaking the paint into chips, and then sifting the chips through a filter mesh of 1/8" by 1/8". The thickness of the paint chips was an average of 5 mils. The qualified coating debris description for the SBLOCA is the same as for the LBLOCA.

The fibrous insulation used in the module testing was NUKON®, TempMat®, and Cerafiber® insulation. Transco insulation was used to simulate both NUKON® and latent fibers. The debris was shredded using a leaf shredder. The fiber was passed through the leaf shredder a minimum of 5 times. During preparation of the fiber, the prepared debris material was randomly sampled and an approximately 1 gram sample of shredded fiber was placed into one gallon of water in a clear container. The container was placed on a ½-inch grid. The fiber was wetted for at least one minute and then fully agitated for approximately 15 seconds. The fiber was observed and compared to the fiber shred reference photograph (see Figure 17 below). The fiber was verified to be in small shreds and individual fibers as shown in Figure 17. If the fiber was too coarse then the fiber was re-shredded and retested.

Based on SEM analysis of FCS calcium silicate insulation, Thermo Gold IIG Cal-Sil insulation from Johns Manville Company was determined to be a suitable surrogate material to be used during the head loss testing (References 8 and 9). The Cal-Sil was

mechanically broken up into a powder and passed through an approximately 0.1" by 0.1" screen. The Cal-Sil was mixed with water prior to addition to the test tank.

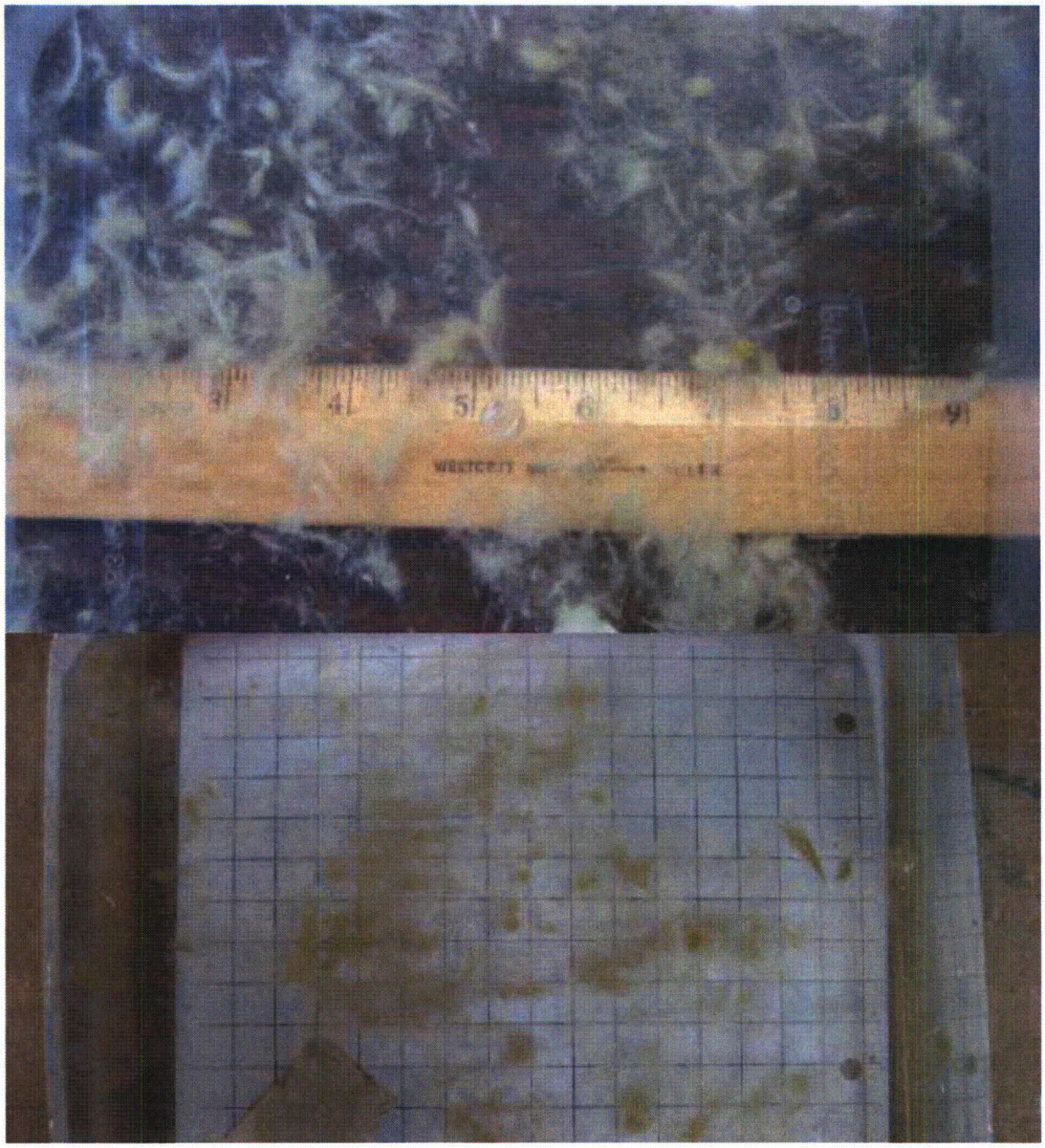

Figure 17
Fiber Preparation

Each test continued until steady state head loss was reached at each flow rate being tested. Steady state head loss is reached when there is less than a 0.1-inch or 1% increase in measured head loss for at least 30 minutes or 5 turnovers, whichever is greater. Termination criteria were not applied until all fiber debris had been added.

The following table provides the preliminary results of the prototypical strainer head loss testing.

Table 19
Strainer Head Loss Testing

Test	Strainer Head Loss (Reference 38) (1)	Maximum Acceptable Head Loss (Reference 37)
LB LOCA Maximum Debris	0.99 ft (unverified)	5.34 ft
LB LOCA 0.25" thin bed	2.19 ft (unverified)	5.34 ft
LB LOCA 0.125" thin bed	2.44 ft (unverified)	5.34 ft
LB LOCA 0.0625" thin bed	1.71 ft (unverified)	5.34 ft
LBLOCA 0.125" thin bed with Chemical Precipitants	4.41 ft (unverified) (not scaled for temperature)	5.34 ft
SBLOCA with chemical precipitants	3.38 ft (unverified) (Partially scaled for temperature)	4.79 ft

Notes:
1) Includes debris and clean head loss
2) The SBLOCA "not scaled for temperature" test head loss of 5.88 ft (70.6 inches). This value was partially scaled to the plant head loss shown in the table by employing the methodology provided in the following section.

Four (4) LBLOCA tests were performed, with thin bed debris loads and without chemical precipitants, to determine the worst debris load case for head loss. The thin bed debris loads consisted of 0.5, 0.25, 0.125 and 0.0625 inches. The results showed the 0.125 inch thin bed resulted in the worst case for head loss. Based on these results the LBLOCA incorporated the 0.125 inch thin bed debris load together with chemical precipitants to obtain the maximum head loss.

For LBLOCA assuming turbulent flow due to bore holes, the plant head loss is proportional to the square of the ratio of the plant debris bed velocity and test debris bed velocity. (A bore hole is the sudden collapse of the debris bed in a localized area, which allows the turbulent flow of water to pass through the debris bed and strainer perforated plate, resulting in reduced head loss.)

The assumption of turbulent flow is conservative as it precludes scaling by kinematic viscosity, which would yield a significantly reduced head loss compared to laminar flow. The strainer head loss at post LBLOCA recirculation conditions was calculated from the testing head loss results using the following scaling equation:

$hl_{plant} = hl_{test} * (V_{plant}/V_{test})^2$

Where:
hl_{plant} = Plant head loss
hl_{test} = Test head loss
V_{plant} = Plant velocity rate per unit area of strainer
V_{test} = Test velocity per unit area of test article

Assuming laminar flow, plant debris head loss is calculated based on the test head loss and the differences between plant and test parameters. The parameters are debris bed velocity, viscosity, debris bed thickness and water density. The relationship between plant head loss, test head loss and the difference in plant and test parameters is based on Darcy's law and the resultant equation is shown below in Equation 3.

$hl_{plant} = hl_{test} * (v_{plant}/v_{test}) * (V_{plant}/V_{test}) * (\Delta x_{plant}/\Delta x_{test}) * (\rho_{test}/\rho_{plant})$ Equation 3

Where:

hl_{plant} = Plant head loss
hl_{test} = Test head loss
v_{plant} = Plant viscosity of water at RAS 196.6°F
v_{test} = Test viscosity of water at 95°F

V_{plant} = Plant flow rate per unit area of strainer
V_{test} = Test flow rate per unit area of test article
Δx_{plant} = Plant debris bed thickness
Δx_{test} = Test debris bed thickness
ρ_{test} = Test density of water at 95 °F
ρ_{plant} = Plant density of water at 196.6 °F

During testing for SBLOCA it was evident that bore holes were present in the debris bed. Bore holes cause turbulent flow and will prevent scaling using Equation 3, if there are a significant number of bore holes. If only laminar flow was present, Equation 3 would scale the maximum test head loss (HL) of 70.6 inches, at 100°F to the theoretical plant head loss at 196.6°F and arrive at the laminar flow head loss of 34.04 inches. To determine the effect of the bore hole on scaling, the test was run, at approximately 100°F, until achieving a maximum head loss of 70.6 inches (corrected for instrumentation accuracy). At this point, the temperature was reduced to 70°F and the head loss was allowed to reach a maximum measured head loss of 78.3 inches (corrected for instrumentation accuracy). If the flow had been entirely turbulent the head loss at 100°F would have remained approximately the same as the head loss at 70°F. Since the head loss did increase, the flow must be a combination of laminar and turbulent flow and would allow for partial scaling, using Equation 3 above. To determine the scaling adjustment factor, Equation 3 is used to scale the maximum head loss at 100°F (70.6 inches) to the theoretical laminar flow head loss at 70°F of 91.48 inches.

The scaling adjustment factor is equal to the ratio of the theoretical laminar flow head loss at 70°F (91.48 inches) to the maximum measured head loss at 70°F (78.3 inches). The adjustment factor is then applied to the laminar flow head loss at 196.6°F (34.04 inches).

Plant partially scaled HL at 196.6°F = Adjust Factor x Plant laminar flow HL at 196.6°F

Adjust Factor = Test laminar flow HL at 70°F / Test maximum measured HL at 70°F

Plant partially scaled HL at 196.6°F = (91.48 in/78.3 in) x 34.04 in = 39.77 in = 3.31 ft. (does not include clean head loss)

Where:
Plant partially scaled HL at 196.6°F: Plant scaled head loss at 196.6°F using Equation 3 above, adjusted for turbulent flow.

Plant laminar flow HL: Plant scaled head loss at 196.6°F using Equation 3.
Test laminar flow HL at 70°F: Test maximum measured head loss at 100°F scaled to head loss at 70°F.

Test maximum measured HL at 70°F: Test maximum head loss measured at 70°F.

Repeatability will be included in the head loss evaluation, after the repeatability testing results, based on SBLOCA with chemical precipitants, and incorporated into the deviation analysis.

Maximum Volume of Debris Predicted to Arrive at the Screen
The large break LOCA test discussed in the previous section used a scaled debris load based on the maximum amount of debris transported to the strainer.

Thin Bed Formation
The fiber debris loads for the thin bed test results are based on the amount of fiber to provide a nominal bed thickness on perforated plate of 1/4", 1/8" and 1/16", respectively. The test results demonstrate the ability of the strainer to resist or accommodate the formation of the thin bed.

Basis for the Strainer Design Maximum Head Loss
The basis for the strainer maximum allowable head loss is the lesser of the crush pressure of the strainer or the allowable ECCS head loss. The lesser allowable head loss was determined to be the limiting NPSH margin as determined by different combinations of pumps and plant alignment as discussed in Section 3g below.

Significant Margins and Conservatisms Used in the Head Loss and Vortexing Calculations
The strainer head loss and vortexing were measured using testing. In addition, the possibility of vortex formation at the strainers was evaluated using the conservative

assumption of increasing the approach velocity by a factor of 3, to simulate the increased flow rate near the suction end of the strainer. Testing was performed using a conservatively low containment sump water level, calculated for the present operating conditions, which assume a considerable volume of water hold up in the refueling cavity and containment spray headers. The water level will be higher following implementation of LAR-07-04 (Reference 16). In addition, the head loss testing for the LBLOCA was conducted using the flows associated with 2 HPSI pumps operating on one header in conjunction with the largest debris load which corresponds to the opposite header.

Methodology, Assumptions, and Results for the Clean Strainer Head Loss Calculation
The clean head loss evaluation is based on a combination of strainer head loss and piping head loss. The strainer head loss is composed of the head loss through the individual disc sets and the central channel. The disc set head loss is based on the module test clean head loss results, which are scaled by the square of the ratio of flow velocities. The central channel uses the resistance coefficient K of a straight pipe to calculate the head loss. The piping uses the resistance coefficient K for the individual piping components to determine head loss of the routing. The maximum clean strainer assembly head loss is 0.123 feet for Strainer SI-12B and 0.071 feet for Strainer SI-12A.

Methodology, Assumptions, and Results for the Debris Head Loss Analysis
The strainer debris head loss was measured using testing and was not determined by analysis.

Sump Submergence and Venting
The strainer at FCS is neither partially submerged nor is it vented (i.e., it lacks a complete water seal over its entire surface) for any accident scenario.

Near-Field Settling
Near-field settling was credited for the LBLOCA head-loss testing. The module is placed into a circular tank, which is at least 18 feet in diameter and at least 4 feet high. See Figures 14 and 15 above. Within the test tank, plywood walls were set up as shown in Figure 13 above. This test setup is intended to model the "B" suction strainer location in the FCS containment annulus, because it will pass the higher flow rate post-LOCA as compared to the "A" strainer and thus would experience a higher head loss. In addition, this testing conservatively uses the highest debris load for all analyzed breaks, which occurs in the A SG bay, which is furthest from the strainers. The plywood walls in the test tank represent the containment wall (wall to the right of the test article on Figure 15) and the bioshield wall (wall to the left of the test article on Figure 15). The distance between the walls is established such that, based on the height of water in the tank, the approach velocity of water in ft/sec across the test strainer would be the same in the test as for the plant in order to accurately model debris settling in that area.

Flashing

Flashing is not anticipated to occur since 8.99 feet of containment overpressure is allowable for credit, and the limiting debris loaded strainer head loss is 5.34 feet (References 37 and 39). However, the flashing evaluation cannot be finalized until LAR-07-04 (Reference 16) is approved to allow the licensing basis to credit containment overpressure as alluded to in the NRC RAI (Reference 51).

3g. Net Positive Suction Head (NPSH)

NRC Guidance

The objective of the NPSH is to calculate the NPSH margin for the ECCS and CSS pumps that would exist during a loss-of-coolant accident (LOCA) considering a spectrum of break sizes.

- *Provide applicable pump flow rates, the total recirculation sump flow rate, sump temperatures(s), and minimum containment water level.*
- *Describe the assumptions used in the calculations for the above parameters and the sources/bases of the assumptions.*
- *Provide the basis for the required NPSH values, e.g., three percent head drop or other criterion.*
- *Describe how friction and other flow losses are accounted for.*
- *Describe the system response scenarios for LBLOCA and SBLOCAs.*
- *Describe the operational status for each ECCS and CSS pump before and after the initiation of recirculation.*
- *Describe the single failure assumptions relevant to pump operation and sump performance.*
- *Describe how the containment sump water level is determined.*
- *Provide assumptions that are included in the analysis to ensure a minimum (conservative) water level is used in determining NPSH margin.*
- *Describe whether and how the following volumes have been accounted for in pool level calculations: empty spray pipe, water droplets, condensation and holdup on horizontal and vertical surfaces. If any are not accounted for, explain why.*
- *Provide assumptions (and their bases) as to what equipment will displace water resulting in higher pool level.*
- *Provide assumptions (and their bases) as to what water sources provide pool volume and how much volume is from each source.*
- *If credit is taken for containment accident pressure in determining available NPSH, provide description of the calculation of containment accident pressure used in determining the available NPSH.*
- *Provide assumptions made which minimize the containment accident pressure and maximize the sump water temperature.*
- *Specify whether the containment accident pressure is set at the vapor pressure corresponding to the sump liquid temperature.*
- *Provide the NPSH margin results for pumps taking suction from the sump in recirculation mode.*

OPPD Response

Figure 12 in Section 3.f shows a schematic of the ECCS. The ECCS consists of two fully redundant trains. One train has two HPSI pumps, one low pressure safety injection (LPSI) pump, and one CS pump while the other header has one HPSI pump, one LPSI pump, and two CS pumps. Both trains are normally aligned to take suction from the safety injection and refueling water tank (SIRWT).

System response is determined by break size and resulting RCS and containment pressure characteristics. The ECCS original design was such that for a large break LOCA, all safety injection and containment spray pumps were started. Amendment 244 (Reference 57) implemented in November 2006 allowed the disabling of the auto-start feature of one CS pump. In 2004, emergency operating and abnormal operating procedures were revised to secure one HPSI pump prior to or shortly following RAS if all three HPSI pumps are in operation (Reference 56).

LAR-07-04 (Reference 16) was submitted by OPPD in July 2007 and is presently under review by the NRC. LAR-07-04 changes the containment spray actuation logic such that the CS pumps will not start during a LOCA. The new CS system actuation logic will require that both the steam generator low signal (SGLS) and the containment spray actuation signal (CSAS) be initiated before the CS system is actuated. Thus, containment spray will not initiate in response to a LOCA, and for a large-break LOCA, only the HPSI and LPSI pumps will inject water into the core. Upon depletion of water in the SIRWT, and initiation of recirculation, the LPSI pumps are automatically stopped and the HPSI pumps are aligned to take suction from the containment sump.

The basis for the containment spray actuation logic change is to improve the NPSH margin for the HPSI pumps by reducing the head loss and hydraulic resistance through the containment sump strainers when the HPSI pumps are operating in the recirculation mode. (The LPSI pumps are automatically shut off following a RAS.) The enhancement in the NPSH performance will be due to reduced transport of debris to the strainer resulting in a reduction in the pressure drop across the strainer and a reduction in piping head loss. This will provide additional margin for the NPSH available ($NPSH_A$) for the HPSI pumps taking suction from the containment sump, increase the amount of water delivered to the core during the injection phase of a LOCA and will increase the time to the initiation of a RAS.

The maximum flow for Train A (Strainer SI-12B) would be 923 GPM and for Train B (Strainer SI-12A) 479 GPM. The flows are based on the calculations of the system performance during the recirculation phase. The worst-case failure from a flow and NPSH margin standpoint is a failure of a LPSI pump to stop at RAS. This failure would result in minimum NPSH margin and maximum flow through one strainer until such time that the pump could be manually stopped by the operators (approximately 10-15 minutes). Additional CFD evaluations for such a condition have shown that this failure would result (under the worst case condition) in loss of only one strainer train. The remaining train would not be affected and will perform its design function. Therefore, no additional NPSH calculations were performed for this case.

The limiting SBLOCA case for debris transport, is a 3" pressurizer spray line in the vicinity of the strainers, because it provides a direct path to the strainers. The debris produced (by the only other line break that can provide a direct path to the strainer) is bounded by the LBLOCA debris. The NPSH margin for the SBLOCA is not limiting

because the pump is injecting against a higher RCS pressure and the NPSH required is lower.

NPSH calculations were performed to establish the ECCS and CS pump NPSH margins in the absence of collected debris (i.e., pump NPSH margins were calculated by subtracting the NPSH required, including the head loss across a clean strainer from the NPSH available.) The required NPSH was taken from the curves provided by the pump manufacturer. The NPSH margin in each case was calculated using a sump temperature of 194.7°F, which corresponds to an equivalent 8.99 feet of subcooling, as credited in the USAR. OPPD has previously requested and received NRC approval for crediting up to and including 8.99 feet of containment overpressure to ensure that NPSH requirements of the pumps are satisfied under the most conservative conditions (i.e. possible pump run-out during a LBLOCA) (Reference 39).

The results shown in the Table 20 below represent the NPSH margin calculated after implementation of the proposed containment spray actuation logic change, when only the HPSI pumps (SI-2A, SI-2B and/or SI-2C) are taking suction from the containment sump.

Table 20
Strainer, NPSH and Water Level Margins

Pump	Case	Strainer	Strainer Flow (gpm)	Minimum NPSH margin (ft)	Containment Water level (ft)*
SI-2A	Train A	SI-12B	479	6.06	3.96
SI-2B	Train B	SI-12A	479	5.34	3.96
SI-2C	Train A	SI-12B	479	5.45	3.96
SI-2A	Train A	SI-12B	923	8.30	3.96
SI-2C	Train A	SI-12B	923	7.74	3.96
SI-2B	Train B	SI-12A	471	6.14	3.41

*Note all water levels are based upon the previous spray configuration, which had water holdup in the refueling cavity, containment spray piping, droplets in the air. As such, in the no-spray configuration the containment water level will actually be higher as there will be no holdup in the refueling cavity or in the piping/containment atmosphere.

NPSH calculations were performed using hydraulic models of the system aligned for ECCS sump recirculation per plant procedures. (Reference 37) Different configurations were modeled and the system configuration resulting in the highest flows was used for testing the installed strainers. The configuration resulting in the smallest NPSH margin was used to determine acceptable screen head loss. The calculations use the Proto-Flow model developed to represent the safety injection piping at FCS. The calculations used the FLO-SERIES Pipeline Reports to determine the head loss in the piping system. Fixed hydraulic resistances (K values) provided for specific valves (when available) were used to calculate the flow coefficient (C_v) values and head loss through the components.

Sump temperature post-RAS was determined as part of the analyses performed to evaluate the containment response without containment spray system initiation. Changes to the base containment response cases were made to maximize sump temperature and minimize containment pressure, for added conservatism in the NPSH calculation. In the Reference 51 request for additional information (RAI) pertaining to LAR-07-04 (Reference 16), the NRC stated:

The NRC staff would prefer to not credit a given amount of containment accident pressure (e.g., 8.99 feet) but rather to simply be assured that there is margin between the calculated containment accident pressure (conservatively minimized) and the pressure necessary to provide adequate available NPSH [net positive suction head] (calculated conservatively). Please provide curves of containment accident pressure as a function of time and the accident pressure necessary to provide adequate available NPSH.

In response to this request, additional long-term cases were performed to further evaluate the long-term sump temperature response (Reference 58). Because of the potential that higher ECCS flow could result in higher stored energy dissipation rates, after the end of the short-term analysis, additional cases were performed to evaluate the long-term effect on sump liquid temperature with maximum ECCS flow. The results of these additional cases show that by the time that RAS occurs, the higher ECCS flow causes a higher stored energy dissipation rate as compared with minimum ECCS flow. As a result, the sump liquid temperature at RAS is higher for cases with maximum ECCS flow leading to higher post-RAS temperatures and lower subcooling head. The shorter time to RAS leads to higher decay heat levels and higher stored energy dissipation that lead to a higher temperature at which the containment air cooling system will remove the energy released to containment.

The results of the GOTHIC code analysis show that the maximum sump temperature of 213.5°F is reached at 1.7 hours after RAS for a cold leg pump suction break. The sump then gradually decreases to approximately 150°F at 30 days after RAS. The limiting case for peak sump liquid temperature and requirement for overpressure credit is a case with maximum ECCS flow (3 HPSI pumps and 2 LPSI pumps during the safety injection phase and 3 HPSI pumps after RAS) and minimum containment cooling (one containment air cooling and filtering unit and two containment air coolers). As requested in the NRC RAI, a comparison of the maximum NPSH deficit, calculated as NPSH Required minus NPSH Available calculated for a containment pressure of 14.2 psia, was plotted along with the available overpressure head.

A maximum NPSH deficit of 4.15 feet was calculated for which overpressure head is required. Credit for overpressure is required for no more than 9 hours post-RAS. This overpressure credit is within the 8.99 feet of overpressure presently in OPPD's licensing basis (Reference 39). In all cases requiring containment overpressure credit, at least 15 feet of overpressure is available as calculated in the containment pressure analysis. Since the results of the strainer testing were not completed at the time of this analysis,

the overpressure credit is calculated assuming the maximum allowable head loss across the strainer. No credit for overpressure head is required for hot leg breaks.

The water inventory required to ensure adequate sump pool level and sump pool flow paths was evaluated. The containment water level calculation was developed following walkdowns performed during the 2003 and 2005 RFOs that identified water holdup volumes in the refueling cavity and around the reactor vessel were identified. Flow past the RPV flange seal is credited as an alternate flow path. This condition was found acceptable for the current design, however, to minimize water holdup and increase sump pool depth (for increased NPSH margin), a modification to install spacers in the RPV flange was implemented during the 2006 RFO (Reference18). The water holdup due to the 4-inch diameter drain line in the refueling cavity will no longer be applicable after implementation of LAR-07-04 since the most significant source of water in the refueling cavity was the containment spray water. Installed and planned modifications to plant systems minimized water hold-up, however submergence and available NPSH were calculated using previous configuration and will be conservative following implementation of the water management initiative.

The inputs into the water level calculation are extremely biased toward minimizing the containment water level. The volumes of the tanks contributing to the sump level calculation were assumed to be at their TS minimum required volume, with maximum instrument measurement uncertainty. This is conservative because it results in the minimum volume injected for all water sources into the containment post-LOCA and results in minimum water level in containment. Minimum sump volume is conservative for evaluating submergence of the strainer and therefore potential for vortexing and flashing. It is also conservative for calculating the available NPSH for the pumps taking suction from the sump

The charging pumps would normally operate but no credit is taken for charging pump operation and thus boric acid storage tank (BAST) volume during any LOCA analysis. Therefore, as conservatism, the BASTs were not considered as a source in the water level calculation. (The inclusion of the BAST volume would add approximately 0.3" to the sump pool.) Following installation of the replacement steam generators, RCS volume increased by about 100 ft^3, this increase is conservatively omitted from the water level calculation.

The water level calculation (Reference 10) conservatively accounts for the sources of water on the containment floor and for water holdup mechanisms and associated volumes. Determination of the minimum water level accounted for water holdup in the following locations:

- Volume held up as vapor in the containment atmosphere.
- Volume held up on the containment floors above the 994' elevation, including the refueling cavity.
- Volume held up in condensation on heat sink surfaces.

- Volume held up as mist (droplets) in the atmosphere.
- Volume required to fill risers and establish containment spray.
- Leakage from the SI and CSS components during the LOCA recirculation phase.
- Volume held up in the refueling cavity and reactor cavity.

The calculation determined the total volume of 2-feet thick cross-sectional slices of the containment, and then subtracted the volume of permanent major plant equipment and structures to yield available free volume. The calculated free volume was then used to plot a graph of free volume vs. floor elevation. The calculation takes into account the volume of water held up under the reactor vessel at elevation 976 feet. With a no-spray configuration, there would be a significant reduction of vapor holdup and mist (droplets) in the containment atmosphere. The volume of water in the refueling cavity, the fill risers, and from CS leakage would also be reduced. Hence, there would be additional margin on water level with the no-spray configuration. However the NPSH calculations and submergence calculations conservatively considered the containment water level as if the CS system continued to operate as before.

Table 21 below summarizes the sources of water used in calculating the minimum water level and the contribution from each source.

Table 21
Summary of Water Sources

Water Source	Volume	
RCS	2,932 ft^3	(21,931 gal)
SIRWT no thermal expansion	36,425 ft^3	(272,457 gal)
SIRWT with thermal expansion	37,127 ft^3	(277,710 gal)
Safety Injection Tank (SIT) (Each Tank)	814 ft^3	(6089 gal)

3h. Coatings Evaluation

NRC Guidance

The objective of the coatings evaluation section is to determine the plant-specific ZOI and debris characteristics for coatings for use in determining the eventual contribution of coatings to overall head loss at the sump screen.

- *Provide a summary of type(s) of coating systems used in containment, e.g., Carboline CZ 11 Inorganic Zinc primer, Ameron 90 epoxy finish coat.*
- *Describe and provide bases for assumptions made in post-LOCA paint debris transport analysis.*
- *Discuss suction strainer head loss testing performed as it relates to both qualified and unqualified coatings and what surrogate material was used to simulate coatings debris.*
- *Discuss suction strainer head loss testing performed as it relates to both qualified and unqualified coatings and what surrogate material was used to simulate coatings debris.*
- *Provide bases for the choice of surrogates.*
- *Describe and provide bases for coatings debris generation assumptions. For example, describe how the quantity of paint debris was determined based on ZOI size for qualified and unqualified coatings.*
- *Describe what debris characteristics were assumed, i.e., chips, particulate, size distribution and provide bases for the assumptions.*
- *Describe any ongoing containment coating condition assessment program.*

OPPD Response

Summary of types of coating systems used in the FCS containment building:

The primary field-applied "Acceptable" (Reference 55) coatings systems in the FCS containment are CZ-11/Phenoline 305 for steel and Nu-Klad 110AA/ Amercoat No. 66 Topcoat for concrete.

In addition, the following acceptable coatings systems have been used for steel maintenance coating work: Carboline 191, Carboline 890, and Keeler & Long E-1 Topcoat on 6548/7107 White Primer. Also, the following acceptable coatings system has been used for concrete maintenance work: Carboline 890. DBA-unqualified coatings systems include inorganic zinc, zinc chromate, epoxy, silicones and alkyds.

Bases for assumptions made in post-LOCA paint debris generation and transport analysis:

The post-DBA debris evaluations of all coatings were all based on NEI-04-07 and/or testing as discussed below.

The debris generation assumption made for "Acceptable" coatings in the ZOI of the LOCA is based on testing performed on representative coating systems. A spherical

ZOI of 5 D for epoxy was selected based on Reference 4. This testing concluded that a spherical ZOI of 4D is conservative for the "Acceptable" epoxy coatings used at FCS.

For debris generation and transport analysis, 10 micron particles were assumed for "Acceptable" coatings within the 5D ZOI. "Acceptable" coatings outside the 5D ZOI were not assumed to fail.

All "Indeterminate" and "Unacceptable" (Reference 55) coatings are considered to fail. This is consistent with NEI-04-07, which considers all indeterminate and unacceptable coatings as a single category of coating, producing debris of the same characteristics independent of the type of coating when immersed in the post-DBA pool.

Testing performed for Comanche Peak Steam Electric Station by Keeler & Long (Reference 11) has been reviewed and found applicable to the degraded DBA-qualified epoxy and inorganic zinc coatings applied at FCS. In the test, epoxy topcoat / inorganic zinc primer coating system chips, taken from the Comanche Peak Unit 1 containment after 15 years of nuclear service, were subjected to DBA testing in accordance with ASTM D 3911-03. In addition to the standard test protocol contained in ASTM D 3911-03, 10 μm filters were installed in the autoclave recirculation piping to capture small, transportable particulate coating debris generated during the test.

Reference 11 shows that inorganic zinc predominantly fails in a size range from 9 to 89 microns with the majority being between 14 and 40 microns. Therefore, a conservative size of 10 microns was assumed for transport and headloss analysis of inorganic zinc. Reference 11 also shows that DBA-qualified epoxy that has failed as chips by delamination tend to remain chips in a LOCA environment. The data showed that almost all of the chips remained larger than 1/32 inch diameter. Therefore, a chip diameter of 1/32 inch may be used for transport for Phenoline 305 epoxy coatings shown to fail as chips by delamination. Carboline Phenoline 305, according to manufacturer's product data sheets and material safety data sheets (MSDSs), is conservatively representative of the other DBA-qualified/Acceptable epoxy coatings found in U.S. nuclear power plants, including Mobil 78, Mobil 89, Amercoat 66, Keeler & Long 6548/7107 and Keeler & Long D-1 and E-1 (Reference 12).

For original equipment manufacturer (OEM) coatings, the Reference 13 EPRI Report "Design Basis Accident Testing of Pressurized Water Reactor Unqualified Original Equipment Manufacturer Coatings," was used to determine that 10 microns is a very conservative assumption for particle sizes. None of the OEM coatings failed as chips. This report also showed that, on average, much less than half of OEM coatings detached and failed during testing. Based on the EPRI test results and the conservative assumption of 10 micron particle size, 100% failure of all OEM coatings is overly conservative.

Based on the review of Reference 13 unqualified coatings, OPPD could not reduce the failure percentage across the board for all non qualified OEM coatings. However,

based on the review of the EPRI report and plant specific coating types, a reduction in the failure percentage for the Phenoline 305 and Amercoat No. 66 Topcoat could be justified. The failure percentage for epoxy (type specific) is 50%. The failure percentage bounds the worst performing sample for this type in the test data.

Therefore, the following failure percentages were assumed for OEM coatings.

Epoxy – 50%
Inorganic Zinc – 100%
Alkyds – 100%
Urethane – 100%
Other – 100%

However, to be conservative, the debris transport analysis considered all OEM coatings to fail and analyzed the distribution of these coatings in regards to elevation, spatial location and CFD transport whether they would transport to the strainers or not. No debris was included in transport and head loss analysis for unqualified coatings outside the ZOI that are (a) within an inactive sump, and (b) covered by intact insulation.

Unqualified coatings fail as chips instead of 10-micron size particulate. It has been noted in industry data that unqualified coatings fail as large chips. As such, their transport properties are significantly different. Industry testing on unqualified coatings by the BWR Owners Group (BWROG) illustrated that epoxy/alkyd coatings failed as large flakes and retained their thickness (Reference 14). As such, for transport purposes it is assumed these coatings fail and transport as large paint chips 5 mils in thickness, which is corroborated by the measurements recorded in plant walkdowns. Additional assumptions are as follows:

- A dry film thickness (DFT) of 7 mils is used for zinc chromate coatings for RCP motors.
- A DFT of 1.5 mils is used for alkyd coatings.
- A DFT of 4 mils is used for ZOI outside of the ZOI that will fail.
- A DFT of 2 mils is used for Galvanox zinc rich coatings outside of the ZOI.
- As noted in the footnotes to Reference 1, a thickness of 10 μm will be used for the aluminum coating debris. Aluminum coating debris is assumed to fail as flakes since the material is comprised of aluminum flakes and leafing.

The coating debris density was calculated based on actual manufacturing data and specification sheets. The debris generation calculation (Reference 1) documented how the FCS coating density was calculated for the specific types of coatings that were used in containment. Table 22 below provides information on the results of these calculations performed to determine coating debris characterization. Details regarding the coating calculations are found in Reference 1. During the blowdown phase of the accident, debris transport will occur as debris is entrained in air and steam moving throughout containment. Since the atmospheric flows have no specific direction during

blowdown, the small fines debris, including acceptable coatings, from the compartment where the break is postulated (SG bay area) to occur will be distributed to all horizontal surfaces outside the compartments and the dome. Using the FCS CAD model, the amount of fines blown to the upper containment was calculated based on the containment upper volume, and the fraction of fines was calculated to be 0.69 blown upwards.

Washdown transport is a phenomena that is dependent upon containment spray initiation and to a small degree condensation within containment. Since FCS will not have containment spray initiation on a LOCA event, there is no washdown of debris that would have to be evaluated based upon spray motive forces. Therefore, all debris that is transported to the upper containment as a result of the blowdown phenomena will remain intact on retained structures/components/equipment until such time as some potential condensation can build up. Without spray motive force at time zero there is no significant washdown. The only potential washdown can come from condensation on vertical and horizontal surfaces. No transport fractions were reported in Appendix VI of the SER (Reference 49) for paint coating debris as a result of condensation. Since coating would be on the order of a similar size to fibrous fines debris, the same transport fractions of 5% were applied for condensation effects only.

Debris transport in the containment bottom floor pool during fill will transport all the fines, including acceptable coatings, with a sheeting action. Ten percent (10%) of the fines will be transported to the inactive volumes of the pool that will not participate in the recirculation flow, i.e., the cavity under the reactor vessel.

OPPD has performed the 3D CFD modeling of the recirculation pool. This calculation has established the pool transport fraction at 72% for fines, including acceptable coatings.

The majority of unqualified coatings in the FCS containment are located at elevations well above the basement floor elevation 994'. Should these coatings fail post-DBA, they would fail near the component they were applied to and as such would fall to the concrete slab floor immediately below that component. The FCS containment is comprised predominantly of concrete slab floors at the upper elevations. Thus, if coatings failed they would most likely reside on the component or near it and not fall through gratings. Also, since FCS will not employ containment spray post-LOCA, there would be no motive force for sliding or driving failed coatings to lower elevations. Without spray washdown, there is no water sheeting action to move coatings towards gratings or openings or stairwells. Without containment spray, there would be no movement of failed unqualified coatings to lower elevations or ultimately to the containment basement floor. Therefore, the failure of unqualified coatings needs only to be evaluated on the containment basement elevation 994'.

Table 22
Coating Debris Characteristics

COATING DEBRIS	DENSITY (lbm/ft^3)
Epoxy Chips (outside ZOI)	97.0
Epoxy ZOI	97.0
IOZ Carboline CZ 11 ZOI	223.0
IOZ Carboline CZ 11 Chips (outside ZOI)	223.0
Zinc Chromate Chips	150.0
Alkyd Enamels Chips	94.0
Cycloaliphatic Amine Epoxy Chips	111.4
Epoxy Phenolic ZOI	105.0
Aluminum Coating outside ZOI	90.0
Galvanox	250.0

The explicit location, area and measured thickness of each source of unqualified coatings in the FCS containment was documented in the 2003 NEI 02-01 walkdown report (Reference 2) and the summary table is provided in the debris generation calculation (Reference 1) for coatings. Reference 2 also specifies by coating, what component the coating was applied to (e.g., zinc chromate on the SITs and pressurizer quench tank). Thus, there is an inventory of unqualified coatings by type, location, elevation, area and thickness based on the 2003 walkdown inspection. Using this safety related inventory, an assessment of the coatings was performed. The unqualified coatings were specified by potential location to a break in the A or B SG bay areas. A disposition or justification of transport of unqualified coatings, if any, is provided in this assessment. Note that the recirculation CFD results indicate that there would be no transport of any failed unqualified coating chips. However, some of these unqualified coatings are near the strainer locations or could be swept to the strainers as a result of the break fill-up sheeting action. As such, the assessment identifies the location of unqualified coatings by elevation, component, thickness and area, and then documents if that source of unqualified coatings would be transported to the sump strainers or not.

The assessments for a break in the A SG Bay area show that potentially 89 lbm of unqualified coatings could be transported to the sump. A break in the B SG Bay area, (which is closest to the sump strainers and has the largest amount of unqualified coatings within its bay) would result in 216 lbm of coatings transported to the strainer. For a SBLOCA event on the 3" pressurizer spray line (See Figure 4 above), only the coatings that were outside the bioshield walls were anticipated to be transported to the sump strainers. This amounted to 22.3 lbm of unqualified coatings.

Head Loss Testing

For head loss testing, representative surrogates with similar density, size, and shape characteristics to the debris generation assumptions above were selected.

In the debris transport analysis to the sump all qualified coatings are shown to be fine particulate debris with particle size on the order of 10 microns diameter. This debris

was simulated in the test with Electro Carb® black silicon carbide. The Electro Carb® black silicon carbide particle size (10 microns diameter) and density are adequate to represent coatings which fail as particulate.

The debris transport analysis to the sump also identifies that all of the unqualified coatings that reach the sump are paint chips. That analysis states that the mechanism for transport of the paint chips is through the sheeting action during pool fill-up, which results in the paint chips being swept out of the bioshield area. The debris transport analysis makes the very conservative assumption that all of this paint chip debris, which is swept out during pool fill-up, is on the strainer.

For the purposes of LBLOCA testing, the unqualified coating debris (i.e., paint chips) is assumed to be zero for the following reasons:

1. The approach velocity in the containment annulus region for the train with the highest flow rate (Train A) is 0.052 ft/sec. This is well below the minimum velocity required to transport coating chips.
2. During pool fill-up, there is no preferential movement of debris to the suction strainer as the pump flow does not pass through the strainer at that time but only later at the onset of recirculation.
3. There are a number of barriers (e.g. stairwells, NaTB baskets), corners and narrow openings between the break location and the suction strainers, which would make deposition of paint chips directly on the strainer highly unlikely.

For the SBLOCA test, the debris transport analysis identifies that all of the unqualified coatings that reach the sump are paint chips. The paint chips are fabricated by painting plastic sheets, peeling the paint off the sheets, breaking the paint into chips, and then sifting the chips through a filter mesh of 1/8" by 1/8". The thickness of the paint chips is an average of 5 mils. The qualified coating debris description for the SBLOCA is the same as for the LBLOCA.

<u>Ongoing Containment Coating Condition Assessment Program</u>

Acceptability of visual inspection as the first step in monitoring of containment coatings is validated by Reference 15. Monitoring of containment coatings is conducted at a minimum, once each fuel cycle. Monitoring involves conducting a general visual examination of all assessable coated surfaces within the containment building as prescribed by FCS Procedure SE-PM-AE-1000, "Containment Protective Coatings Inspection." Examinations are conducted by knowledgeable Engineering and Quality Control personnel followed by additional nondestructive inspection of degraded coating areas if necessary as directed by the procedure. Deficiency reporting criteria and inspection documentation requirements are also delineated in this procedure.

3i. Debris Source Term

NRC Guidance

The objective of the debris source term section is to identify any significant design and operational measures taken to control or reduce the plant debris source term to prevent potential adverse effects on the ECCS and CSS recirculation functions.

- Provide the information requested in GL 04-02 Requested Information Item 2.(f) regarding programmatic controls taken to limit debris sources in containment.

GL 2004-02 Requested Information Item 2(f)

A description of the existing or planned programmatic controls that will ensure that potential sources of debris introduced into containment (e.g., insulations, signs, coatings, and foreign materials) will be assessed for potential adverse effects on the ECCS and CSS recirculation functions. Addressees may reference their responses to GL 98-04, "Potential for Degradation of the Emergency Core Cooling System and the Containment Spray System after a Loss-of-Coolant Accident Because of Construction and Protective Coating Deficiencies and Foreign Material in Containment," to the extent that their responses address these specific foreign material control issues.

In responding to GL 2004 Requested Information Item 2(f), provide the following:

- *A summary of the containment housekeeping programmatic controls in place to control or reduce the latent debris burden. Specifically for RMI/low-fiber plants, provide a description of programmatic controls to maintain the latent debris fiber source term into the future to ensure assumptions and conclusions regarding inability to form a thin bed of fibrous debris remain valid.*
- *A summary of the foreign material exclusion programmatic controls in place to control the introduction of foreign material into the containment.*
- *A description of how permanent plant changes inside containment are programmatically controlled so as to not change the analytical assumptions and numerical inputs of the licensee analyses supporting the conclusion that the reactor plant remains in compliance with 10 CFR 50.46 and related regulatory requirements.*
- *A description of how maintenance activities including associated temporary changes are assessed and managed in accordance with the Maintenance Rule, 10 CFR 50.65.*

If any of the following suggested design and operational refinements given in the guidance report (guidance report, Section 5) and SE (SE, Section 5.1) were used, summarize the application of the refinements.

- *Recent or planned insulation change-outs in the containment which will reduce the debris burden at the sump strainers*
- *Any actions taken to modify existing insulation (e.g., jacketing or banding) to reduce the debris burden at the sump strainers*
- *Modifications to equipment or systems conducted to reduce the debris burden at the sump strainers*
- *Actions taken to modify or improve the containment coatings program*

OPPD Response

Enhancements have been made in overall containment housekeeping such that the latent debris was reduced from 159 lbm for the 2003 RFO to 15-16 lbm for the 2006 RFO. The 159 lbm was conservatively used in the debris generation basis for the strainer design.

The Foreign Material Exclusion (FME) program and control of signs and tags are existing programs/procedures and did not require any specific changes as a result of GL 2004-02. Improvements to the FME program were made in response to NRC Bulletin 2003-01, "Potential Impact of Debris Blockage on Emergency Sump Recirculation at Pressurized-Water Reactors" dated June 9, 2003. Operating Instruction OI-CO-1, "Containment Closeout" was modified to place additional controls on materials stored in containment during power operations. OI-CO-1 notes that any loose tools, insulation, lagging, filter material, plastic bags, debris, etc., can potentially block the ECCS suction strainers and degrade system performance. All such material must be removed from containment prior to final closeout. Items such as portable fire extinguishers must be removed from containment prior to final containment closeout. With the exception of up to four (4) drums of galvanized steel scaffold couplers, the procedure does not allow aluminum or galvanized metal to be stored in containers. The procedure specifies the maximum number of ladders with aluminum rungs that may be left in containment. As part of the containment closeout process, the strainers are checked to ensure that they are free of debris. Maps for containment closeout are included to assist the operators in performing their inspections prior to closing containment for power operations.

OPPD has implemented a containment insulation configuration control program. Program Basis Document (PBD)-38, "Containment Insulation Control" and PED-GEI-79, "Containment Insulation Control Program" are utilized to ensure that future changes to insulation inside containment are bounded by the new design basis calculation. Checklists in the configuration control procedures (PED-QP-2, "Configuration Change Control," PED-GEI-3, "Preparation of Modifications," PED-GEI-29, "Preparation of Facility Changes," and PED-GEI-35, "Preparation of Minor Configuration Changes" etc.) require the preparers to review any changes to the insulation, coatings or aluminum that could affect the sump strainers. This program requires engineering approval for all future insulation changes in containment. Procedural controls are in place such that removal or addition of aluminum inside containment must be approved by engineering. An approved coatings technical and quality document (PED-CSS-3, "Procuring, Applying and Inspecting Protective Coatings Inside Reactor Containment Building") is maintained that meets current industry requirements and FCS commitments.

A coatings walkdown and inspection is performed every outage per Procedure SE-PM-AE-1000. In addition, recoating of existing plant components using qualified materials, applicators, and inspectors typically takes place every refueling outage. These procedures provide controls to maintain the insulation, aluminum, and coatings inside of containment within the acceptable design margin for debris loading of the containment sump suction strainers following a LOCA. Standing Order (SO)-O-25, "Temporary

Modification Control" will be enhanced regarding configuration control of insulation in containment by the end of the 2008 RFO. Temporary modifications must be reviewed and approved by the Plant Review Committee (PRC), which provides additional oversight. Thus, the controls described above will ensure that FCS remains in compliance with 10 CFR 50.46 and related regulatory requirements.

Two categories of design and operational refinements have been taken at FCS to reduce the plant debris source term.

1. Change-Out of Insulation: Replacement of the steam generators, pressurizer, and reactor vessel head occurred during the 2006 RFO. This resulted in removal of 975 ft^3 of Cal-Sil, 691 ft^3 of TempMat® insulation, and 7041 ft^2 of unqualified coatings. The amount of RMI was slightly increased, and 425 ft^3 of additional LDFG was installed. Thus, a significant amount of Cal-Sil and TempMat® insulation were removed (56% Cal-Sil and 75% TempMat® from the 2003 configuration) from containment during the 2006 RFO.

2. Modify Other Equipment or Systems: OPPD is in the process of implementing a water management initiative strategy at FCS. This strategy is discussed in LAR-07-04 (Reference 16). Following NRC approval, when implemented during the 2008 RFO, this change will remove the automatic initiation of the containment spray system during a LOCA. This will significantly reduce the amount of debris transported to the containment floor and reduce the flow through the strainer during recirculation, and thereby reduce the quantity of debris transported to the strainer.

Maintenance of Analyzed Configuration

To maintain the required configuration of the containment recirculation function that supports the inputs and assumptions utilized to perform the mechanistic evaluation of this function, OPPD has implemented programmatic and process controls. Plant procedures, programs, and design requirements were reviewed to determine those that could impact the analyzed containment or recirculation function configuration. These reviews resulted in the identification of those documents that required revision or development of new documents to ensure maintenance of the inputs and assumptions into the future.

The Engineering related documents that were revised or developed to support and maintain the required configuration control for maintenance of the inputs and assumptions that support the GSI-191 issue resolution are:

PED-QP-2, "Configuration Change Control,"
PED-GEI-3, "Preparation of Modifications,"
PED-GEI-35, "Preparation of Minor Configuration Changes,"
PED-GEI-29, "Preparation of Facility Changes,"

PED-GEI-79, "Containment Insulation Control Program,"
PBD-38, "Containment Insulation Control," and the checklists associated with these procedures.

PED-GEI-79 is considered the master document for determining the acceptability of materials for use in containment for preventing changes to the insulation debris source term.

Design control and design change reference procedures (PED-QP-2, PED-GEI-3, PED-GEI-29, PED-GEI-35) provide for detailed analysis and evaluation of modifications to structures, systems and components (SSCs) inside containment, or in the required downstream recirculation flowpaths. This ensures that the inputs and assumptions that support the GSI-191 resolution will be maintained into the future. This includes maintenance of debris source term considerations and component configurations in the flowpaths that support the recirculation function.

Implementation of sump strainer inspections that provide for monitoring of processes and containment conditions important to maintenance of the recirculation function are conducted prior to power operations (OI-CO-1). In addition, the strainers are inspected during refueling outages to ensure that there is no physical damage that would allow passage of debris larger than the opening of the strainer.

The containment coatings technical and quality procedure (PED-CSS-3) was revised to ensure personnel performing initial coating visual inspections or extent-of-condition visual inspections are qualified to the applicable ANSI requirements.

Inspection procedure SE-PM-AE-1000 directs that each location of degraded or questionable condition of qualified or non-qualified coatings be examined and reported if significant.

An insulation database has been established to ensure that maintenance activities do not change the analysis and modification input assumptions without an appropriate engineering evaluation. Maintenance activities related to insulation materials are scheduled per FCSG-32, "Work Week Management."

The inputs and assumptions for debris generation, debris transport, head loss determination (including chemical effects considerations), upstream, and downstream effects analyses and associated testing have been documented in approved engineering documents (subject to the requirements of 10 CFR 50 Appendix B). This will facilitate evaluation of conditions that may be contrary to analysis and modification input assumptions, and ensure that future changes to the plant can be readily evaluated against these design and licensing basis criteria.

The plant documents that were revised or developed to support and maintain the required configuration control for maintenance of the inputs and assumptions that

support the GSI-191 issue resolution are: OI-CO-1, PED-GEI-79, SE-PM-AE-1005, IC-ST-AE-3833, "Type C Local Leakage Rate Test of Penetration M-HCV-383-3," and IC-ST-AE-3834, "Type C Local Leakage Rate Test of Penetration M-HCV-383-4."

Procedures for containment access and containment closeout (OI-CO-1) contain the necessary controls to ensure that containment will remain in a configuration that fully supports the inputs and assumptions associated with the resolution of GSI-191.

Procedures for containment inspections contain the necessary attributes to ensure the inputs and assumptions associated with analyses described previously are maintained. This includes attributes such as coatings, insulation, and latent debris.

Local leak rate procedures have been revised to include a physical inspection of each strainer to ensure that no damage to the screens, bolting, frame or other surfaces has occurred resulting in a larger than the nominal 0.0625" hole size.

In summary, OPPD has implemented, or will implement the necessary programmatic and process controls to ensure the recirculation function will be maintained in the future.

3j Screen Modification Package

NRC Guidance

The objective of the screen modification package section is to provide a basic description of the sump screen modification.

- *Provide a description of the major features of the sump screen design modification.*
- *Provide a list of any modifications, such as reroute of piping and other components, relocation of supports, addition of whip restraints and missile shields, etc., necessitated by the sump strainer modifications.*

OPPD Response

The scope of the modification was to perform the hardware changes required to bring FCS into full resolution with GSI-191. This modification, installed during the 2006 RFO, replaced the existing screens for the plant located outside the shield walls on the basement floor of the containment.

The horizontal stacked disk strainers (Figures 18 and 19 below) for FCS Trains A and B consist of a series of 30 horizontally stacked square disks, which are 48" x 33" x 1.22" thick with a 20" O.D. disk spacer in the center. These disks consist of a ½" inch frame or internal structure with one perforated plate on each side, 0.059" thick, with 1/16" holes on 7/64" staggered centers with approximately 30% open area and one wire cloth on each side with 0.120" wire diameter, 0.38" opening size and approximately 58% open area. The disks are installed with a 3.0" pitch, which includes a 1.76" nominal gap between adjacent wire cloths. This will reduce approach velocity to the screens to 0.004 fps. The strainer configuration is designed to withstand the allowable head loss to 5.3 feet during post-LOCA design conditions.

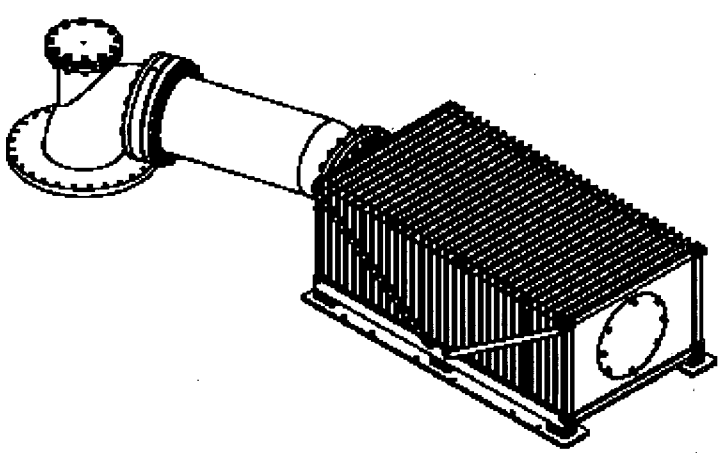

Figure 18
FCS Single Strainer Module

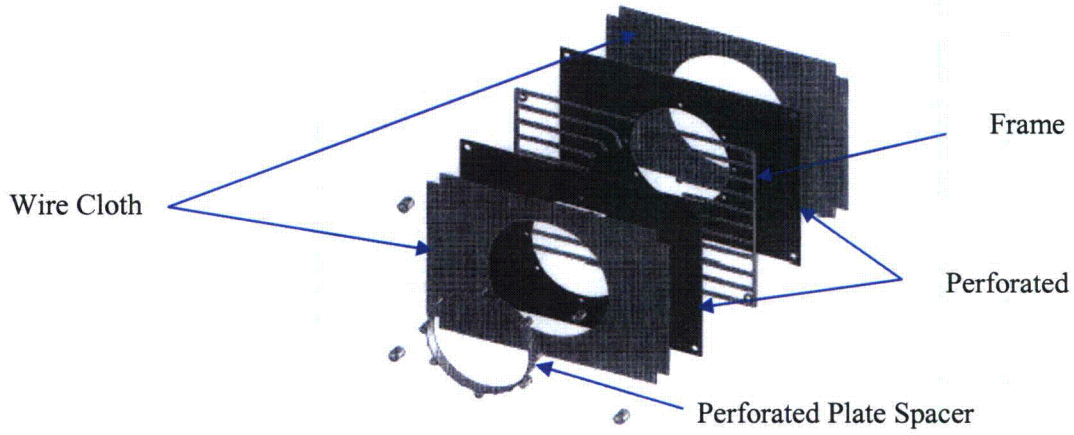

Figure 19
FCS Typical Strainer Disk

The modules are located approximately 4 inches above the containment floor.

There is one module for each strainer train (Figure 20 below). The modules are bolted together and attached to the mounting track via the side struts. The mounting track is bolted to the containment slab. The mounting track is made of structural shapes: angles and plates. The strainer design allows for disassembly, replacement of plates, or addition of future modules as needed. A 20-inch, schedule 10, stainless steel pipe and elbow delivers the water into the ECC recirculation header.

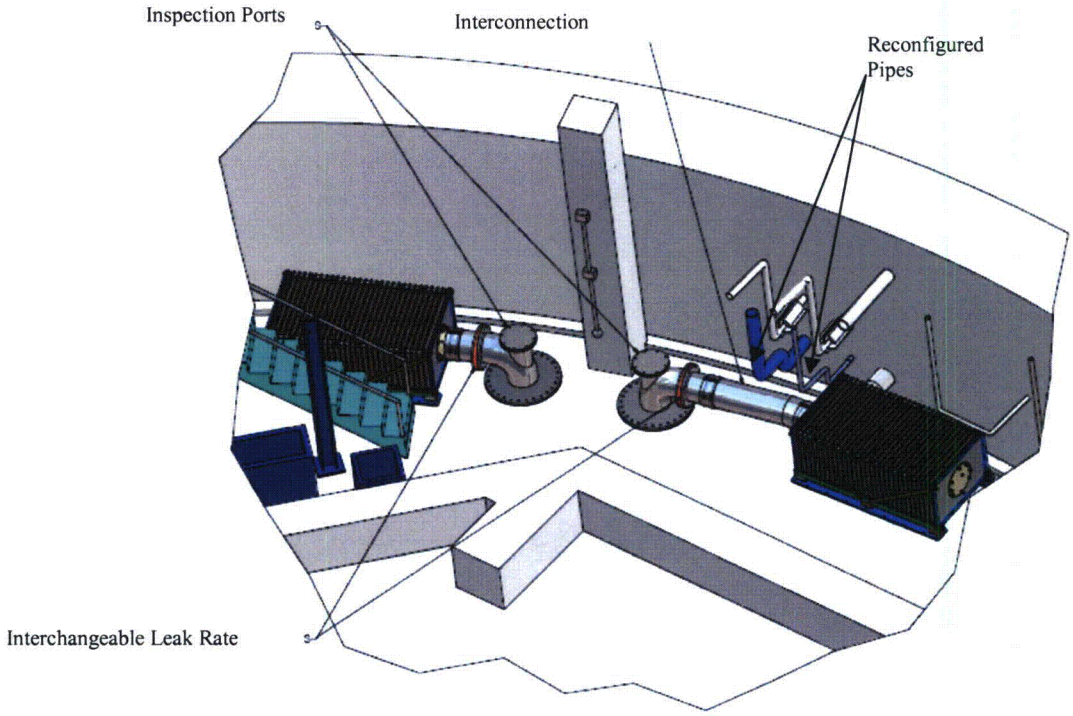

Figure 20
Fort Calhoun Strainer Arrangement

To accommodate the strainers, two pipes were reconfigured as shown on Figure 20 above and one pipe support was reconfigured as shown in Figure 21 below.

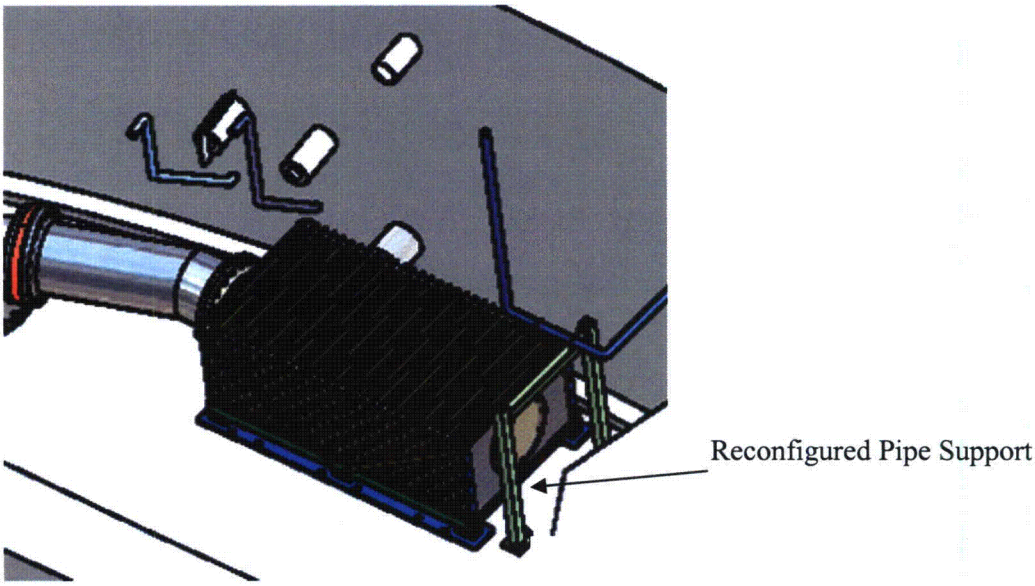

Figure 21
Strainer SI-12B

3k. Sump Structural Analysis

NRC Guidance
The objective of the sump structural analysis section is to verify the structural adequacy of the sump strainer including seismic loads and loads due to differential pressure, missiles, and jet forces.

Provide the information requested in GL 2004-02 Requested Information Item 2(d)(vii).

GL 2004-02 Requested Information Item 2(d)(vii)
Verification that the strength of the trash racks is adequate to protect the debris screens from missiles and other large debris. The submittal should also provide verification that the trash racks and sump screens are capable of withstanding the loads imposed by expanding jets, missiles, the accumulation of debris, and pressure differentials caused by post-LOCA blockage under flow conditions.

- *Summarize the design inputs, design codes, loads, and load combinations utilized for the sump strainer structural analysis.*
- *Summarize the structural qualification results and design margins for the various components for the sump strainer structural assembly.*
- *Summarize the evaluations performed for dynamic effects such as pipe whip, jet impingement, and missile impacts associated with high-energy line breaks (as applicable).*
- *If a backflushing strategy is credited, provide a summary statement regarding the sump strainer structural analysis considering reverse flow.*

OPPD Response
The modified safety injection sump strainer assemblies for FCS are located in the same general area as the previous strainer screens. Sketches showing the location of the modified strainer assemblies and a discussion about the strainers are included in the response to item 3j above. The strainers are located outside the biological shield. A back flushing strategy is not employed at FCS.

The modified safety injection sump strainer assembly was structurally analyzed and found to meet all design requirements given in the FCS USAR. The load combinations used in this analysis are the same as already defined for structures in safety related applications at FCS.

The references used in the analysis, the design inputs used, and the loadings used in the analysis are defined in the detailed structural analysis (Reference 17).

The structural performance of the suction strainers was analyzed using ANSYS Version 10. Stresses from various load combinations were compared with the ASME Code Section III, Subsection ND stress limits. Stress ratios for various components were calculated for the design conditions, Service Level B and Service Level D. The

minimum stress ratios are shown in Table 23 and Table 24 below based on the minimum properties and minimum stress allowable. The analysis results show that the ASME code requirements are satisfied for all of the structural components and welds.

Table 23
Stress Ratio Summary for Strainer Components based on ASME Code Subsection NC

Component	Service Level	Stress Ratio*
Perforated Plates	Design	3.91
Fingers	Design	7.86
Frame and End Cap	Design	13.46
Spacers	Design	7.39
Base	Design	5.10
Outer Rods	Design	3.26
Inner Rods	Design	3.71
Pipe	Design	27.32
Perforated Plates	Level – B	4.30
Fingers	Level – B	8.64
Frame and End Cap	Level – B	14.81
Spacers	Level – B	8.13
Base	Level – B	5.61
Outer Rods	Level – B	3.59
Inner Rods	Level – B	4.08
Pipe	Level – B	30.06
Perforated Plates	Level – D	6.26
Fingers	Level – D	12.57
Frame and End Cap	Level – D	21.53
Spacers	Level – D	11.82
Base	Level – D	8.16
Outer Rods	Level – D	5.22
Inner Rods	Level – D	5.93
Pipe	Level – D	43.71

*Stress Ratio = ASME Stress Limit/Calculated Max. Stress

Table 24
Stress Summary for Welds based on Service level D Load

Weld Location	Weld Stress (psi)	Allowable Stress** (psi)	Stress Ratio*
Perforated Plate to Finger	4,681.42	8,164	1.74
Perforated Plate to Frame	9,722.50	9,342	1.01

*Stress Ratio = ASME Code Stress Limit/Calculated Stress
**Conservative Level A Stress Limits, ASME Code Section III, Subsection ND-3923 at 188 °F

The load due to differential pressure for the sump strainer was determined to be able to withstand a crush pressure of 7 psi (Reference 43).

Pipe whip and jet impingement were reviewed for their impact on the modified strainers, and were found not to be a concern. The strainers are located in areas where there are no pipe whip loads or missile loads on the strainers.

Plant procedures require the safety injection sump strainer assembly to be inspected prior to containment closeout at the end of an outage. The Operations Department performs this inspection to ensure containment cleanliness, the absence of loose items, etc., in accordance with OI-CO-1. During the local leak rate test for the penetration connected to each strainer, each strainer is inspected for gaps and breaches and a condition report (CR) is generated if any damage is identified. In summary, FCS has evaluated the modified sump strainers and shown that all design requirements are met.

3l. Upstream Effects

NRC Guidance
The objective of the upstream effects assessment is to evaluate the flowpaths upstream of the containment sump for holdup of inventory, which could reduce flow to and possibly starve the sump.

Provide a summary of the upstream effects evaluation including the information requested in GL 2004-02 Requested Information Item 2(d)(iv).

GL 2004-02 Requested Information Item 2(d)(iv) The basis for concluding that the water inventory required to ensure adequate ECCS or CSS recirculation would not be held up or diverted by debris blockage at choke-points in containment recirculation sump return flowpaths.

- *Summarize the evaluation of the flow paths from the postulated break locations and containment spray washdown to identify potential choke points in the flow field upstream of the sump.*
- *Summarize measures taken to mitigate potential choke points.*
- *Summarize the evaluation of water holdup at installed curbs and/or debris interceptors.*
- *Describe how potential blockage of reactor cavity and refueling cavity drains has been evaluated, including likelihood of blockage and amount of expected holdup.*

OPPD Response
As part of the sump inventory, debris generation, and debris transport analyses, an evaluation of flowpaths necessary to return water to the recirculation sump strainer was performed. This evaluation was performed in accordance with the recommendations contained within NEI 04-07 to identify those flowpaths that could result in the holdup of water not previously considered. As a result of these evaluations, improved debris exclusion devices were installed on reactor cavity and refueling cavity drain lines to improve flow to the sump (Reference 41) and reactor vessel spacer rings were installed to reduce the water hold-up in the upper cavity (Reference 18). With these changes all water return flowpaths have sufficiently large openings to prevent the holdup of significant quantities of water that could challenge the containment sump minimum water level analysis.

With the implementation of water management strategies, the only source of water from the upper regions of containment that would drain to the sump region would be due to condensation. This change will increase the water level above the value used in the minimum containment water level calculation because sources of water holdup such as the refueling cavity and the containment spray headers will no longer contain water. Nevertheless, the NPSH margin and the allowable strainer head loss were calculated using the conservatively low water level in containment. As a result of the evaluations performed and physical changes completed, OPPD has determined that the upstream effects analysis provides the necessary level of assurance that the required volume of

water will be available to the recirculation sump for the function to meet the applicable requirements as set forth in NEI 04-07 and GL 2004-02.

FCS does not have debris interceptors in containment to limit transport of debris.

3m. Downstream Effects – Components and Systems

NRC Guidance

The objective of the downstream effects, components and systems section is to evaluate the effects of debris carried downstream of the containment sump screen on the function of the ECCS and CSS in terms of potential wear of components and blockage of flow streams. Provide the information requested in GL 04-02 Requested Information Item 2(d)(v) and 2(d)(vi) regarding blockage, plugging, and wear at restrictions and close tolerance locations in the ECCS and CSS downstream of the sump.

GL 2004-02 Requested Information Item 2(d)(v)

The basis for concluding that inadequate core or containment cooling would not result due to debris blockage at flow restrictions in the ECCS and CSS flowpaths downstream of the sump screen, (e.g., a HPSI throttle valves, pump bearings and seals, fuel assembly inlet debris screen, or containment spray nozzles). The discuss should consider the adequacy of the sump screen's mesh spacing and state the basis for concluding that adverse gaps or breaches are not present on the screen surface.

GL 2004-02 Requested Information Item 2(d)(vi)

Verification that the close-tolerance subcomponents in pumps, valves and other ECCS and CSS components are not susceptible to plugging or excessive wear due to extended post-accident operation with debris laden fluids

- *If NRC-approved methods were used (e.g., WCAP-16406-P with accompany NRC SE)[1], briefly summarize the application of the methods. Indicate where the approved methods were not used or exceptions were taken, and summarize the evaluation of those areas.*
- *Provide a summary and conclusion of downstream evaluations.*
- *Provide a summary of design or operational changes made as a result of downstream evaluations.*

OPPD Response

A calculation was performed in accordance with WCAP-16406-P methods and documented in Reference 19. The scope of this calculation was to look at the impact of debris entrained in recirculated fluid systems and impact on downstream components. It should be noted that chemical effects were not considered in this calculation per WCAP-16406-P, and in-vessel effects were addressed in a separate assessment noted in response 3n below. The equipment identified as requiring review for impact of downstream effects were throttle valves and pumps. Relief valves, orifices, heat exchangers and post accident sampling system equipment were previously evaluated for flow clearances (Reference 25).

[1] The draft SE for this document was issued to the applicant in November 2007.

The conclusions from Reference 25 are separated by component type and discussed next.

High Pressure Safety Injection (HPSI) Pumps

- The evaluation of the Doxie cyclone separators currently installed in the HPSI Pumps showed that they may be susceptible to plugging. Thus, a test will be conducted on an identical cyclone separator to determine if it is capable of operating under post-LOCA conditions. A replacement separator that has proven successful in generic industry testing will also be tested for FCS specific debris and flow conditions. If necessary, the cyclone separators will be replaced during the 2008 RFO.
- Mechanical seal leakage for HPSI pumps is acceptable after 30 days.
- Hydraulic performance is acceptable after 30 days.
- Vibration is acceptable after 30 days.

Containment Spray (CS) and Low Pressure Safety Injection (LPSI) Pumps (note - CS pumps will no longer be required for design basis LOCA mitigation and thus, this information is provided for information only)

- The hydraulic performance is acceptable after 30 days.
- Mechanical seal leakage for CS and LPSI pumps is acceptable after 30 days.

Valves and Orifices

The bounding valves have less than 1% increase in flow area after 30 days of continuous operation. The bounding flow element has about 0.03 mils of wear after 30 days of continuous operation. The containment spray nozzles would have less than 0.005 mils of wear (however, as noted above, CS is not required to mitigate a design basis LOCA and thus, without operation, the wear rate would not change). These increases in flow area are less than the 3% allowed; therefore, these increases in flow area are acceptable.

Heat Exchangers

The pump coolers are single tube heat exchangers, so the velocity is the same as it is in the rest of the system. There would be no settling in the heat exchanger. The shutdown cooling heat exchanger is a multi-tube design, but the minimum velocity is above the debris settling velocities. The wear in the shutdown cooling heat exchanger and HPSI pump seal cooler is 0.002 mils after 30 days. The wear in the CS and LPSI seal coolers is 0.008 mils after 30 days (note CS is not required for design basis LOCA mitigation). This would be immeasurable and would not be expected to adversely effect the system operation.

Instrumentation

Instrumentation that would be required to work when exposed to debris laden fluid is acceptable.

Post Accident Sampling System
The post accident sampling system has been abandoned in place. For the most part, the system is not subject to blockage and there are workarounds to obtain samples if necessary.

Vessel Plenum Debris
The volume of debris settling in the lower plenum is estimated to be less than 10 ft^3. The volume of debris trapped in the core is less than 10 ft^3. The screen mesh spacing has been determined to be adequate and prototype tested for bypass conditions. There are no adverse gaps in the installed strainer structure. Surveillance tests IC-ST-AE-3833 and IC-ST-AE-3834 require inspection of the strainer mesh to ensure that there are no gaps larger than 0.0625". Also, the downstream effects calculations (Reference 25) documented the clearances downstream to justify installation of the 1/16" mesh spacing screen.

Differences in OPPD calculation methodology from WCAP-16406-P suggestions:
- The suction multiplier was increased from 0.0865 to 0.205 for conservatism.
- The WCAP indicated that packing type wear may be limited to diametric clearance up to 0.05". The calculation looked at packing wear that will take place if the clearance gap is 50 mils or less, and it will wear to four times the gap clearance before expulsion. Using a starting gap of 50 mils or under for packing type wear is in compliance with the WCAP. In September 2007, Westinghouse clarified that the plug is not credited with blowing out until 4 times the original gap is reached.
- For qualified coatings a larger size particle was used which is conservative and results in more calculated wear than what was assumed in the WCAP (10 microns).
- Plant specific settling size for particulates was used and resulted in more conservative approach than the WCAP.
- A different wear equation was used in the WCAP. A maximum load derivation was used in the OPPD calculation instead of the WCAP formula and is more bounding. The stiffness portion of the WCAP calculation was used.
- FCS does not utilize the referenced specific pump in the WCAP that has stiffness calculations. Instead, friction factors for each gap were calculated and the stiffness after 30 days and at 2X wear were calculated.

3n. Downstream Effects –Fuel and Vessel

NRC Guidance

The objective of the downstream effects, fuel and vessel section is to evaluate the effects that debris carried downstream of the containment sump screen and into the reactor vessel has on core cooling.

- *Show that the in-vessel effects evaluation is consistent with, or bounded by, the industry generic guidance (WCAP-16793)[2]–as modified by NRC staff comments on that document. Briefly summarize the application of the methods. Indicate where the WCAP methods were not used or exceptions were taken, and summarize the evaluation of those areas.*

OPPD Response:

The total amount of fiber bypass through the suction strainers for FCS is based on the results of completed tests of fiber bypass performed by GE. The total amount of fiber bypass was determined both experimentally and analytically. A fiber only (TempMat®) bypass test was performed using a scaled sector test article which contained the same perforated plate hole size, wire cloth size and vertical stacked disk orientation as the plant strainer. TempMat® was utilized because it represents the majority of fiber that is generated at FCS, and also has a similar characteristic size as NUKON® fiber. The bypass testing was conducted at a flow rate, which provided the same approach velocity through the perforated plate for the test as that for the plant strainer under design flow rate conditions for FCS. The test performed was a fiber only test, which would provide conservative assessment of fiber bypass as other particulates such as Cal-Sil, or chemical effects debris would tend to plug up more holes in the debris bed and thus reduce bypass. The fiber bypass test was run using fine meshed filters with 5 micron holes to capture the downstream bypassed fiber. Complete capture of bypassed fiber was attained with these downstream filters. The test pool was well mixed throughout the fiber bypass testing using a combination of return flow along with mechanical agitators. This assured that all of the fiber either was deposited on the strainer or captured by the bypass filters with little or no fiber settling in the pool. The measured fiber bypass included not only fiber caught in the filters but also fiber which was retrieved in all areas of the test strainer downstream of the perforated plate such as in the gap area between opposing perforated plates mounted on the frame.

[2] Because this document is still under NRC review, licensees should be aware of any NRC RAIs on it. The draft NRC SE for WCAP-16793 is expected to be issued in December 2007. After resolution of any open items from the staff's evaluation of this document, the staff will determine whether additional information is needed from licensees. Licensees should not delay their GL responses pending this information.

The test results show that a total of 24.135 gr (grams) of dry fiber bypassed the strainer out of a total of 5084.74 gr (or 0.47%). The total plant strainer fiber bypass was then calculated based on testing results and applying linear scaling of the measured tested fiber bypass. The total bypass consists of the measured fiber bypass plus an additional amount associated with linear extrapolation of the bypass rate at test termination over a 30 day period. This is shown as follows:

Bypass test = Bypass measured + Bypass 30 day

Bypass rate was determined to be 0.12 gr dry fiber in 60 minutes based on measured data.

Therefore,
Bypass 30 day = (0.12g/60 min)*(30 days)*(24 hours/day)*(60 min/hr)
Bypass 30 day = 86.40 gr
Bypass measured = 24.135 gr

Bypass test = 24.135 gr + 86.40 gr = 110.535 gr

This amount of fiber is a small fraction of the initial loading on the strainer. The total bypass fraction for 30 days is therefore,

Bypass fraction = 110.535 gr/5084.74 gr = 2.2%

The amount of debris that could be anticipated to bypass the plant specific strainer is then calculated:

Bypass test = 110.535 gr = 0.2437 lbm
Area of plant strainer = 523 ft^2
Aptest = 22.8 ft^2

Bypass plant = (0.2437 gr)*(523 ft^2/22.8 ft^2)
Bypass plant = 5.59 lbm

Based on a micro density of TempMat® material of 162 lbm/ft^3 the volume of fibers would equate to 0.035 ft^3. This is a very small fraction of TempMat® material considering the initial load. The actual volume of fibrous debris is quite low in comparison to the amount of debris that was assumed for downstream wear effects (10 ft^3). Thus, the actual measured/calculated bypass is approximately a factor of over 200 less than what was evaluated for downstream effects on components, and systems.

The amount of material calculated above was used for determining the chemical effects in the vessel and with fuel using the methodology described in WCAP-16793 (LOCADM calculations) (References 50 and 53). The preliminary calculations indicate with the maximum debris case a fuel clad scale thickness at 37.8 microns (using double the

amount of aluminum source) and a fuel clad temperature of 283°F at the maximum scale thickness. Per item 9 of the NRC letter to NEI dated February 4, 2008 (Reference 54), "the staff accepts a cladding temperature of 800°F as the long-term cooling acceptance basis for GSI-191 considerations." Preliminary calculations have determined that the FCS scenarios for predicted fuel clad temperature (at the maximum scale thickness) are less than this limit. As such, no further calculations are required in regards to cladding strength under oxidized or pre-hydrided conditions.

The conditions/limitations in the final NRC SER for WCAP-16793 methodology will be addressed by OPPD in a supplemental report. The preliminary calculations indicate with the maximum debris case a fuel clad scale thickness at 37.8 microns (even with a doubled aluminum source) and a fuel clad temperature of 283°F at the maximum scale thickness.

3o. Chemical Effects

NRC Guidance
The objective of the chemical effects section is to evaluate the effect that chemical precipitates have on head loss and core cooling.

- *Provide a summary of evaluation results that show that chemical precipitates formed in the post-LOCA containment environment, either by themselves or combined with debris, do not deposit at the sump screen to the extent that an unacceptable head loss results, or deposit downstream of the sump screen to the extent that long-term core cooling is unacceptably impeded.*
- *Content guidance for chemical effects is provided in Enclosure 3 to a letter from the NRC to NEI dated September 27, 2007 (ADAMS Accession No. ML0726007425).*

OPPD Response
Head Loss Testing Chemical

FCS chemical product generation predictions were documented in a WCAP-16530 spreadsheet calculation (Reference 22). These calculations were based on conservative assumptions in regards to maximizing chemical debris based on performing several parametric evaluations. The worst combination of debris, pH, temperature profiles and water volumes were utilized to maximize the amount of chemical debris predictions. The predictions are documented in Reference 22 and were based on conservative refined models established in the WCAP-16530 methodology. Scaled amounts of chemical debris were then added to strainer testing.

The post-LOCA chemical precipitates were calculated using the methodology in Reference 23. The refinements were made in response to the fact that all unsubmerged aluminum at FCS will not be sprayed thus there will be no motive force for continuous removal of any surface boundary layers on the aluminum materials. OPPD did not employ refinements in regards to different types of aluminum alloy corrosion models. OPPD did employ a refinement in regards to silica inhibition for aluminum release. Westinghouse tests (Reference 24) specifically evaluated the impact of various silicate concentrations and aluminum corrosion. The results of these tests indicated that for plants with a high fiber and Cal-Sil loading that silicate inhibition may be used once the silicon concentration reaches a specified threshold value (75 ppm). FCS sump conditions fall within the tested ranges for both silicon and sump boron concentration. As such, use of the silicate inhibition model is appropriate for FCS chemical product predictions since the plant conditions have been established to fall within the testing parameters. The predicted chemical precipitate was employed in a strainer test program for large-break LOCA (LBLOCA) and small-break LOCA (SBLOCA) test scenarios. Also, the FCS containment Cal-Sil materials and hence, there would be silica released as a function of debris generated. The plant specific inputs utilized were as follows:

- Post-LOCA containment recirculation pool temperature profile from most current application of no-spray configuration. This has the impact of raising the containment sump temperature for potential dissolution/pH impact. Thus, the recirculation pool temperature was maximized as a result of going to a no-spray configuration. With utilization of containment fan coolers only, the cooling impact on the pool is not readily seen in the short term; thus, this maximizes chemical reaction potential prior to recirculation.
- Post-LOCA containment atmosphere temperature profile based on the no-spray configuration was utilized. Again, this maximizes the temperature profile as the containment fan coolers will be utilized to reduce temperature. In the methodology, only one fan cooler train is credited at a reduced heat removal rate; thus, the maximum temperature is maximized on the high side. There are two completely redundant containment fan cooler trains, but only one is credited and at a reduced heat removal rate. Thus, in best estimate assessments the actual containment temperature profile would be significantly lower.
- A no-spray configuration was input, hence no spray flow and pH from spray was required for input.
- Plant walkdowns (Reference 42) were utilized to identify and locate aluminum materials in containment. The chemical product generation calculation was based upon the determination of aluminum in the submerged condition, as FCS will be in a no-spray configuration.
- Debris quantities in the recirculation pool also included any potential insulation that could be on piping intact that was submerged and not jacketed.
- Debris quantities from the debris generation calculation were also included in the recirculation pool. The types of debris included, TempMat®, NUKON®, LDFG, Cal-Sil, Cal-Sil with asbestos.
- Only submerged aluminum was considered as FCS will have a no-spray configuration post-LOCA. Exposed concrete was also considered.
- Calculations were performed with both the maximum and minimum recirculation pool volumes, with the maximum volume being most conservative, for the LBLOCA, and a minimized volume being more conservative for a SBLOCA scenario.
- One case was also run for SBLOCA conditions, since it has the greatest potential for impact on head loss testing conditions.
- Eight (8) LBLOCA scenarios were run to look at other situations where the Cal-Sil was lower and fibrous debris higher in ratio. The results indicated that the case with the most amount of Cal-Sil and fibrous debris yielded the highest amount of chemical precipitates.
- FCS uses NaTB for a buffer material, and hence, the recirculation pool pH condition will be dominated by the buffer characteristics of this material, i.e., an approximate pH of 7.5 with the amount specified.

Some assumptions that were used during the calculation of chemical precipitates:

- The recirculation pool was assumed to be at its most acidic condition for a beginning of cycle (BOC) RCS boron condition, i.e., approximately 4.5.
- It is assumed that the sump pool is never fully mixed, which ensures that dissolution rates of the various materials are not inhibited due to solution concentration effects.
- A sensitivity calculation was performed on minimum or maximum recirculation start. Except for one case, the sensitivity calculations indicated that the chemical precipitate load was not changed whether a minimum or maximum time to RAS was used. For that case, a minimum time to RAS was more conservative, and hence all calculations show a minimum time to RAS for the pH profiles.
- No refinements were utilized for non Alloy 1100 aluminum materials.

Table 25 below shows the results of four (4) LBLOCA cases at maximum pool volume conditions and one SBLOCA scenario.

Table 25
Predicted Chemical Precipitate Formation

Case	Break Description	Precipitate ($NaAlSi_3O_8$) lbm
1	RC2A Hot Leg, Max Pool	631.0
2	RC2B Hot Leg, Max Pool	564.0
3	RC3A Cold Leg, Max Pool	380.0
4	RC3D Cold Leg, Max Pool	402.0
SBLOCA	SBLOCA volume minimized	9.5

Table 26 below shows the predicted loads. The chemical effects testing was performed by GE who applied scaling for testing based on these loads.

Table 26
SBLOCA Debris Loads for Testing
(not scaled for test conditions)

Debris Type	Mass or Volume
LDFG (fines)	0.98 ft^3
Cal-Sil (fines)	0.7 ft^3
Unqualified Coatings	22.3 lbm
Qualified Coatings	2.0 lbm
Particles Latent Debris	40.2 lbm
Fiber Latent Debris	2.2 lbm
Other Latent Debris	37.2 lbm
Stickers, Tape, Labels	71.0 ft^2
Sand	0.0 lbm
Chemical Precipitant	10.2 lbm

3p. Licensing Basis

NRC Guidance
The objective of the licensing basis section is to provide information regarding any changes to the plant licensing basis due to the sump evaluation or plant modifications.

Provide the information requested in GL 04-02 Requested Information Item 2.(e) regarding changes to the plant licensing basis. The effective date for changes to the licensing basis should be specified. This date should correspond to that specified in the 10 CFR 50.59 evaluation for the change to the licensing basis.

GL 2004-02 Requested Information Item 2(e) A general description of and planned schedule for any changes to the plant licensing bases resulting from any analysis or plant modifications made to ensure compliance with the regulatory requirements listed in the Applicable Regulatory Requirements section of this generic letter. Any licensing actions or exemption requests needed to support changes to the plant licensing basis should be included.

OPPD Response
Changes to the licensing basis will be implemented in accordance with the requirements of 10 CFR 50.59, consistent with extensions approved by the NRC in Reference 40. The USAR will be updated, consistent with the requirements of 10 CFR 50.71(e) to reflect changes made due to the sump evaluation or due to plant modifications required to resolve issues related to GL-2004-02. This includes implementation of the containment spray actuation logic change per Reference 16 during the 2008 RFO.

OPPD received NRC approval (Reference 59) to operate FCS for the current fuel cycle with NaTB in baskets located in the containment basement. An LAR to make this change permanent was submitted in September 2007 (Reference 45) and NRC approval is expected prior to the start of the 2008 RFO.

No other licensing actions are required to support changes to the licensing basis.

4. NRC GL 2004-02 RAI (Reference 46)

NRC Question

1. *Not Applicable*
2. *Identify the amounts (i.e., surface area) of the following materials that are:*

   (a) submerged in the containment pool following a loss-of-coolant accident (LOCA)
   (b) in the containment spray zone following a LOCA:

-aluminum
-zinc (from galvanized steel and from inorganic zinc coatings)
-copper
-carbon steel not coated
-uncoated concrete

Compare the amounts of these materials in the submerged and spray zones at your plant relative to the scaled amounts of these materials used in the Nuclear Regulatory Commission (NRC) nuclear industry jointly-sponsored Integrated Chemical Effects Tests (ICET) (e.g., 5x the amount of uncoated carbon steel assumed for the ICETs).

OPPD Response:

(a) The approximate amount of materials (surface area) that would be submerged in the FCS containment pool following a LOCA are as follows:

Aluminum* – 4158 ft^2
Zinc (galvanized steel and from zinc paint untopcoated) – 13,736 ft^2
Copper – 1531 ft^2
Carbon steel not coated – 935 ft^2
Uncoated concrete – 1794 ft^2

(b) FCS will not utilize containment spray following a LOCA; hence, there are no materials that would be within a containment spray zone following a LOCA. As such, the ICET considered spray on sample coupons, which would be a more bounding configuration than FCS scenario for formation of chemical precipitate.

Table 27 below compares the submerged containment quantities of the FCS sump water volume to the ratios reported in Table 2-2 of the ICET #5 test. This ICET is most representative for FCS as it utilized Borax (NaTB) for the buffer material. FCS uses NaTB for the buffer material to neutralize the post-LOCA sump.

* Approximately 78% of the aluminum quoted is inside a robust HVAC enclosure (gasketed/welded/sealed).

Table 27
Material Quantity/Sump Volume Ratios for ICET #5 Test Compared to FCS Submerged Material Ratios

Material	ICET #5 Value of Ratio for the Test (Sprayed and Submerged) (Ratio Units)	FCS Submerged Material Ratios (Ratio Units)	ICET #5 Factor Higher than Plant Configuration
Aluminum	3.5 (ft^2/ft^3)	0.13 (ft^2/ft^3)	27x
Zinc	12.6 (ft^2/ft^3)	0.44 (ft^2/ft^3)	29x
Copper	6.0 (ft^2/ft^3)	0.05 (ft^2/ft^3)	120x
Carbon Steel	0.15 (ft^2/ft^3)	0.03 (ft^2/ft^3)	5x
Concrete	0.045 (ft^2/ft^3)	0.06 (ft^2/ft^3)	0.75x

Thus, it can be seen that predominantly the ICET #5 test material ratios are significantly greater than the material ratios for the plant configuration. Only the FCS submerged material configuration was considered as there will be no spray post-LOCA.

NRC Question

3. *Identify the amount (surface area) and material (e.g., aluminum) for any scaffolding stored in containment. Indicate the amount, if any that would be submerged in the containment pool following a LOCA. Clarify if scaffolding material was included in the response to Question 2.*

OPPD Response

In containment, scaffold racks and up to four (4) drums of couplers made of galvanized steel are stored between columns 3 and 5 below the equipment hatch. Scaffold racks can contain any combination of scaffold tubes (also made of galvanized steel) whose combined length does not exceed 3200 lineal feet including tubes used to construct the scaffold rack. Prior to containment closeout, the stored scaffolding is verified not to exceed this amount (OI-CO-1, Attachment 2, Step 12).

The actual amount of scaffolding that would be submerged depends upon the stacking arrangement of the poles on the racks. If the lineal amount of poles equaled 3,200 feet, then the total submerged area that could potentially be submerged is approximately 1600 ft^2 of zinc bearing materials. The amount noted in response 2 above is 6% of the total amount in containment and it is unclear if the scaffolding poles are included in the submerged estimate for zinc bearing materials. Nevertheless, if the amount of scaffolding is added to the amount reported in OPPD's response to question 2 above, the comparison to ICET #5 would still be a factor of 20 higher.

NRC Question

4. *Provide the type and amount of any metallic paints or non-stainless steel insulation jacketing (not included in the response to Question 2) that would be either submerged or subjected to containment spray.*

OPPD Response
Following the implementation of LAR-07-04 (Reference 16) during the 2008 RFO, there will be no materials subjected to containment spray at FCS because spray will not be initiated for LOCA scenarios. The non-stainless steel insulation jacketing that would be submerged has been accounted for in response to question 2 above.

All aluminum metallic paint on the reactor vessel is covered by insulation, and since there is no spray there would be no chemical interaction. If a nozzle break were to occur destroying the vessel RMI there would be potential for exposed and possible submergence of this coating. However, this material is in an inactive area, and hence there would not be a direct communication of the volume of water under the reactor vessel to the containment sump pool for chemical effects.

NRC Question
5. *Provide the expected containment pool pH during the emergency core cooling system (ECCS) recirculation mission time following a LOCA at the beginning of the fuel cycle and at the end of the fuel cycle. Identify any key assumptions.*

OPPD Response
The expected containment pool pH is anticipated to be approximately 4.5 at the beginning of pool fill-up conditions. This is based on a BOC condition of approximately 2,450 ppm boron for a mixed sump pool. The initial end of cycle (EOC) pH would be higher as the boron concentration in the RCS would be significantly reduced. The expected final pH would be approximately 7.5 after dissolution of the NaTB.

NRC Question
6. *For the ICET environment that is the most similar to your plant conditions, compare the expected containment pool conditions to the ICET conditions for the following items: boron concentration, buffering agent concentration, and pH. Identify any other significant differences between the ICET environment and the expected plant-specific environment.*

OPPD Response
The FCS plant condition is most similar to the ICET #5 test condition. Table 28 below provides a comparison of the FCS plant and ICET #5 test conditions.

Table 28
Comparison of Pool Chemistry FCS post-LOCA and ICET #5

Chemistry Parameter	FCS	ICET #5
Boron Concentration	Approx. 2450 ppm	2800 ppm
Buffering Agent NaTB	Minimum TS requirement 112.9 ft^3 (approximately 3000 mg/L NaTB at minimum water level) following NRC approval of Reference 45	As required to reach boron concentration of 2400 mg/L, page 12
pH initial	4.5	8.4
pH target	7.5	8.1 to 8.4

A comparison of the ICET #5 test and chemical release/pH is detailed in Reference 22 (for calcium, silicon, and aluminum release comparisons).

NRC Question

7. *Not Applicable.*

8. *Discuss your overall strategy to evaluate potential chemical effects including demonstrating that, with chemical effects considered, there is sufficient net positive suction head (NPSH) margin available during the ECCS mission time. Provide an estimated date with milestones for the completion of all chemical effects evaluations.*

OPPD Response

To demonstrate that with chemical effects considered, there is sufficient NPSH margin available during ECCS mission time, an integrated head loss test of fiber and particulate debris and chemical effects debris was performed with a module test article. The objective of the module tests was to determine the head loss at scaled plant conditions of debris quantity and flow rate. The test module was prototypic in height, width, spacing, orientation, and wire cloth and perforated plate characteristics. The test was operated for at least the same number of tank turnovers as the plant pool turnovers during the 30-day event. The test data was used to confirm the design of the plant strainers to assure that specified debris loads with chemical effects do not result in head loss greater than the allowable NPSH margin (Reference 26).

NRC Question

9. *Identify, if applicable, any plans to remove certain materials from the containment building and/or to make a change from the existing chemicals that buffer containment pool pH following a LOCA.*

OPPD Response

Using the license amendment process, OPPD changed buffer neutralization materials from TSP to NaTB. OPPD received NRC approval (Reference 59) to operate for the current fuel cycle with NaTB in baskets located in the containment basement. An LAR to make this change permanent was submitted in September 2007 (Reference 45) and NRC approval is expected prior to the start of the 2008 RFO.

NRC Question

10. *If bench-top testing is being used to inform plant-specific head loss testing, indicate how the bench-top test parameters (e.g., buffering agent concentrations, pH, materials, etc.) compare to your plant conditions. Describe your plans for addressing uncertainties related to head loss from chemical effects including, but not limited to, use of chemical surrogates, scaling of sample size and test durations. Discuss how it will be determined that allowances made for chemical effects are conservative.*

OPPD Response

OPPD has not performed any bench top testing in regards to buffering agents, pH and materials. The FCS- specific chemical head loss testing was performed by GE in their test facility. The test was conducted with tap water and utilized chemical precipitates aluminum oxyhydroxide and sodium aluminum silicate.

NRC Question

11. *Provide a detailed description of any testing that has been or will be performed as part of a plant-specific chemical effects assessment. Identify the vendor, if applicable, that will be performing the testing. Identify the environment (e.g., borated water at pH 9, deionized water, tap water) and test temperature for any plant-specific head loss or transport tests. Discuss how any differences between these test environments and your plant containment pool conditions could affect the behavior of chemical surrogates. Discuss the criteria that will be used to demonstrate that chemical surrogates produced for testing (e.g., head loss, flume) behave in a similar manner physically and chemically as in the ICET environment and plant containment pool environment.*

OPPD Response

All hydraulic tests were run at Continuum Dynamics Incorporated (CDI) using tap water at 95°F.

Hydraulic tests were initially run for LBLOCA and SBLOCA locations with addition of chemical effect (CE) precipitates once the non-CE head loss has stabilized. The SBLOCA location generated greater head loss and was used in subsequent tests. CE precipitates consisted of aluminum oxyhydroxide and sodium aluminum silicate.

CE precipitates predicted from the WCAP model for the SBLOCA scenario were added to the tank along with the fiber addition representing actual CE arrival at the strainer. The addition schedule is shown in Table 4.1a of Reference 27.

The precipitates were prepared in accordance with the SER for WCAP-16530, and for the SBLOCA location, no near field credit was taken as the environment is well mixed by means of agitators. These will assure that all chemical effect precipitates introduced in the tank end up accumulated in the strainer.

Details about the preparation of the chemical effects debris and the introduction in the tank can be found in Sections 4.11 and 4.5 respectively of Reference 26.

NRC Question

12. *For your plant specific environment, provide the maximum projected head loss resulting from chemical effects (a) within the first day following a LOCA, and (b) during the entire ECCS recirculation mission time. If the response to this question will be based on testing that is either planned or in progress, provide an estimated date for providing this information to the NRC.*

OPPD Response

The maximum projected head losses, for the first day and at the thirtieth day following a LOCA, are based on testing for the LBLOCA and the SBLOCA. The testing includes the following assumptions: 1) the number of tank turnovers during testing will result in equivalent head loss as the same number of plant pool turnovers and 2) the staged addition of debris and chemicals will result in concentrations near the test article that are similar to the plant conditions.

For the LBLOCA, the projected head loss for the first day following it is less than 0.5 inches and for the thirtieth day is approximately 26 inches (Reference 28). For the SBLOCA, the projected head loss for the first day following it is less than 0.5 inches and for the thirtieth day is approximately 60 inches (Reference 29). These head loss values are as tested values and do not reflect temperature scaling with viscosity.

NRC Question

13. *Not Applicable*

14. *Given the results from the ICET #3 tests (Agencywide Document Access and Management System (ADAMS) Accession No. ML053040533) and NRC-sponsored head loss tests (Information Notice 2005-26 and Supplement 1), estimate the concentration of dissolved calcium that would exist in your containment pool from all containment sources (e.g., concrete and materials such as calcium silicate, Marinite™, mineral wool, kaylo) following a large-break loss-of-coolant accident (LBLOCA) and discuss any ramifications related to the evaluation of chemical effects and downstream effects.*

OPPD Response

This test is no longer relevant in comparison to FCS plant conditions. OPPD has switched to utilizing NaTB for buffer neutralization and as such the ICET #3 test is no longer appropriate for comparison. See the response to question 2 above for comparison to ICET #5 and FCS plant-specific configurations. A FCS calculation (Reference 22), documents a comparison of calcium, silicon, and aluminum releases between plant-specific conditions and ICET #5 test results versus 30-day period.

NRC Question

15. *Not Applicable*

16. *Not Applicable*
17. *Not Applicable*
18. *Not Applicable*
19. *Not Applicable*
20. *Not Applicable*
21. *Not Applicable*
22. *Not Applicable*
23. *Not Applicable*
24. *Not Applicable*
25. *Describe how your coatings assessment was used to identify degraded qualified/acceptable coatings and determine the amount of debris that will result from these coatings. This should include how the assessment technique(s) demonstrates that qualified/acceptable coatings remain in compliance with plant licensing requirements for design-basis (DBA) performance. If current examination techniques cannot demonstrate the coatings' ability to meet plant licensing requirements for DBA performance, licensees should describe an augmented testing and inspection program that provides assurance that the qualified/acceptable coatings continue to meet DBA performance requirements. Alternatively, assume all containment coatings fail and describe the potential for this debris to transport to the sump.*

OPPD Response

Acceptability of visual inspection as the first step in monitoring of containment coatings is validated by Reference 15. Monitoring of containment coatings is conducted at a minimum, once each fuel cycle. Monitoring involves conducting a general visual examination of all assessable coated surfaces within the containment building as prescribed by FCS Procedure SE-PM-AE-1000, "Containment Protective Coatings Inspection." Examinations are conducted by knowledgeable Engineering and Quality Control personnel followed by additional nondestructive inspection of degraded coating areas if necessary as directed by the procedure. Deficiency reporting criteria and inspection documentation requirements are also delineated in this procedure.

NRC Question

26. *Not Applicable*
27. *Not Applicable*
28. *Not Applicable*
29. *Not Applicable*
30. *The NRC Staff's safety evaluation (SE) addresses two distinct scenarios for formation of a fiber bed on the sump screen surface. For a thin bed case, the SE states that all coatings debris should be treated as particulate and assumes 100% transport to the sump screen. For the case in which no thin bed is formed, the staff's SE states that the coatings debris should be sized based on plant-specific analyses for debris generated from within the ZOI and from outside the ZOI, or that a default chip size equivalent to the area of the sump screen openings should be used (Section 3.4.3.6). Describe how your coatings debris characteristics are modeled to*

account for your plant-specific fiber bed (i.e. thin bed or no thin bed). If your analysis considers both a thin bed and a non-thin bed case, discuss the coatings debris characteristics assumed for each case. If your analysis deviates from the coatings debris characteristics described in the staff-approved methodology, provide justification to support your assumptions.

OPPD Response
See response to question 3.f above for testing and coatings discussions.

NRC Question
31. *You indicated that you would be evaluating downstream effects in accordance with WCAP 16406-P. The NRC is currently involved in discussions with the Westinghouse Owner's Group (WOG) to address questions/concerns regarding this WCAP on a generic basis, and some of the discussions may resolve issues related to your particular station. The following issues have the potential for generic resolution; however, if a generic resolution cannot be obtained, plant-specific resolution will be required. As such, formal RAIs will not be issued on these topics at this time, but may be needed in the future. It is expected that your final evaluation response will specifically address those portions of the WCAP used, their applicability, and exceptions taken to the WCAP. For your information, topics under ongoing discussion include:*

a. *Wear rates of pump-wetted materials and the effect of wear on component operation*
b. *Settling of debris in low flow areas downstream of the strainer or credit for filtering leading to a change in fluid composition*
c. *Volume of debris injected into the reactor vessel and core region*
d. *Debris types and properties*
e. *Contribution of in-vessel velocity profile to the formation of a debris bed or clog*
f. *Fluid and metal component temperature impact*
g. *Gravitational and temperature gradients*
h. *Debris and boron precipitation effects*
i. *ECCS injection paths*
j. *Core bypass design features*
k. *Radiation and chemical considerations*
l. *Debris adhesion to solid surfaces*
m. *Thermodynamic properties of coolant*

OPPD Response
See Section 3.m above for downstream effects discussions on components.

NRC Question
32. *Existing calculations have been performed to support crediting containment overpressure in NPSH margin calculations for a one-day period following a LOCA. During the pilot audit review, the staff noted that containment overpressure was cited as a possible source of margin to provide relief against chemical effects,*

which might cause increasing head loss over a timeframe from days to weeks. The staff also noted that, in the GL response, a potential license amendment to change the methodology for crediting overpressure was discussed. Will the revised methodology analyze extending overpressure credit beyond the one-day period currently analyzed, to the timeframe of days or weeks over which chemical effects head loss might act?

OPPD Response
See Section 3.g above for NPSH discussions.

NRC Question
33. *During the pilot audit review, the NRC staff noted a potential nonconservatism in that the refueling cavity drains were not explicitly modeled in the CFD analysis. The staff also observed, during the pilot audit review, that the potential exists that other significant sources of nonuniformity in the spray drainage pattern might exist. Will the CFD calculation be updated to account for refueling cavity drainage and/or any other potentially significant sources of concentrated containment spray or other water drainage into the containment pool?*

OPPD Response
During the pilot audit review the observation regarding to the refueling cavity drains and the non-uniformity of containment spray was updated in the CFD analysis. All calculations at that point were updated to address the pilot plant audit finding. Subsequent to that review, and as previously discussed in this letter, OPPD is in the process of implementing a no-spray configuration for the LOCA scenario. As such, the CFD analysis was completely revised to reflect a no-spray configuration post-LOCA as spray will not be initiated. The CFD model was upgraded to model a conservative 3 HPSI pump configuration (although only 2 will initiate) through the strainer module and pool turbulence. The break models of the CFD analysis were not altered and remained the same. Since there will be a no-spray configuration, the questions regarding the refueling cavity drain and the non-uniformity of containment spray modeling are no longer applicable.

NRC Question
34. *During the pilot audit review, the staff noted that debris settling (i.e., the near-field effect) was credited to support the design basis of the proposed replacement strainers. Please estimate the fraction of debris that settled and describe any analyses (beyond the limited generally qualitative information provided during the pilot audit) that were performed to correlate the scaled flow conditions and any surrogate debris in the test flume with the actual flow conditions and debris types in the plant's containment pool.*

OPPD Response
To address the debris settling concerns (i.e., the near field effect), additional prototypical testing was performed. This testing incorporated computational fluid

dynamics assessment of the projected in-plant conditions and the test pool conditions in an effort to demonstrate the similarity of fluid conditions. These additional analyses and commitments were discussed by OPPD with the NRC on February 28, 2006. For FCS, the LBLOCA relies on near field settling. The test setup is intended to credit near field settling in the area around the strainer located in the annulus between the containment and the bioshield wall up to approximately the location of the strainer suction penetration in the floor. The distance between the containment wall and the bioshield wall is established such that, based on the height of water in the tank, the approach velocity of water across the test strainer would be the same in the test as in the plant in order to accurately model debris settling in that area. This test annulus width is less than it is for the plant, which is conservative for modeling settling.

Based on the results of the LBLOCA tests that used near field settling, almost all of the fiber remained in suspension and was deposited on the strainer, less than 5 percent of the fiber settled to the floor. About 50 % of the particulate, which includes calcium silicate and silicon carbide (paint surrogate), settled to the floor. Over 95 % of the sand settled to the floor (Reference 26).

NRC Question

35. *Are there any vents or other penetrations through the strainer control surfaces, which connect the volume internal to the strainer to the containment atmosphere above the containment minimum water level? In this case, dependent upon the containment pool height and strainer and sump geometries, the presence of the vent line or penetration could prevent a water seal over the entire strainer surface from ever forming; or else this seal could be lost once the head loss across the debris bed exceeds a certain criterion, such as the submergence depth of the vent line or penetration. According to Appendix A to Regulatory Guide 1.82, Revision 3, without a water seal across the entire strainer surface, the strainer should not be considered to be "fully submerged." Therefore, if applicable, explain what sump strainer failure criteria are being applied for the "vented sump" scenario described above.*

OPPD Response

The FCS passive suction strainer system does not include vents or other penetrations through strainer control surfaces that could connect the volume internal to the strainer system with the containment atmosphere above the containment minimum water level. The strainers and interconnecting piping are all below the surface of the minimum water level.

NRC Question

36. *The staff noted that the GL response stated that the licensee is evaluating a possible modification to the refueling cavity and reactor cavity drain caps to minimize potential debris blockage. Please confirm whether or not this modification will be performed. In addition, the staff requests that the licensee describe the potential types and characteristics of debris that could reach these drains. In particular, could*

large pieces of debris be blown into the upper containment by pipe breaks occurring in the lower containment, and subsequently drop into the cavity?

OPPD Response

The cavity drains were modified (Reference 41) to minimize potential debris blockage. Since the completion of that modification, OPPD submitted an LAR that will also minimize the potential for debris blockage in the refueling cavity drains. Following NRC approval, OPPD will implement a no-spray configuration post-LOCA. Even if debris is blown upwards it will not be washed downwards by spray motive forces and it will tend to remain adhered onto gratings or structures in the upper containment. In addition, gratings are at the 1013' and upper levels, which would prevent large pieces of debris from being blown upwards and then subsequently dropped into the cavity. As such, the concern noted has been minimized by both installation of a spacer, and the fact that containment spray will not be operational to wash debris into drain systems. The reactor vessel cavity area is an inactive pool area below the vessel. Also, since there is no containment spray post-LOCA there will be no spray water heldup in the refueling cavity or the potential for debris to become entrapped in drains lines blocking flow to the sump.

NRC Question

37. *What is the minimum strainer submergence during the postulated LOCA? At the time that the re-circulation starts, most of the strainer surface is expected to be clean, and the strainer surface close to the pump suction line may experience higher fluid flow than the rest of the strainer. Has any analysis been done to evaluate the possibility of vortex formation close to the pump suction line and possible air ingestion into the ECCS pumps? In addition, has any analysis or test been performed to evaluate the possible accumulation of buoyant debris on top of the strainer, which may cause the formation of an air flow path directly through the strainer surface and reduce the effectiveness of the strainer?*

OPPD Response

The minimum submergence for the FCS strainers is calculated to be 4.22 inches. This calculated value is based on the actual as-installed strainer dimensions and the minimum water level.

The possibility of vortex formation was evaluated with the conclusion that there was a large margin to vortex formation and air ingestion despite the use of conservative assumptions regarding the approach velocity at the strainer surface. In addition, after completion of the head loss test, the water level is decreased until observing air ingestion. Air ingestion occurs at water levels, which range from the top of the strainer to 12 inches below the top of the strainer.

No formal analysis has been performed to evaluate the possible accumulation of buoyant debris on top of the FCS strainer modules. However, for all load cases there is

only sufficient fiber to form a thin bed on the strainer and is thus effectively immune to issues associated with buoyant fibrous debris (References 30 to 32).

NRC Question

38. *You submitted its computational fluid dynamics (CFD) calculation performed using a FLOW-3D computer code and the NRC staff reviewed it as part of a pilot plant audit. However, the September 2005 GL response noted that OPPD used a different computer code, FLUENT for CFD analysis. Please identify major changes made to CFD modeling with the computer code change.*

OPPD Response

All debris transport and pool turbulence calculations were performed with FLOW-3D® CFD computer code. No computer code changes were made in regards to debris transport and pool turbulence calculations. The reference to the FLUENT code on page 18 of the 2005 GL response (Reference 47) was in error. FLOW-3D® has been the only computer code utilized for all OPPD debris transport and pool turbulence calculations.

NRC Question

39. *The September 2005 GL response noted that you are considering testing to determine calcium silicate debris transportability. If the testing is used to design the sump screen, please summarize the basis, results, and conclusions of the testing and how you apply testing for the design.*

OPPD Response

Upon further evaluation, testing to determine calcium silicate debris transportability was determined to be unnecessary and thus it was not used to design the sump strainers.

5. References

1. Calculation FC06985, Revision 1, "Fort Calhoun Station Debris Generation Post-LOCA"
2. Enercon Services Report OPP003-RPT-001 Rev. 1, "Containment Insulation Summary Master 2006 Update"
3. ALION-REP-ALION-2806-01, Revision 3, "Insulation Debris Size Distribution for Use in GSI 191 Resolution"
4. WCAP-16568-P, "Jet Impingement Testing to determine the Zone of Influence (ZOI) for DBA Qualified/Acceptable Coatings, Revision 0, June 2006
5. Not Used
6. NUREG/CR-6808, "Knowledge Base for the Effect of Debris on Pressurized Water Reactor Emergency Core Cooling Sump Performance," LA UR 03 0880, 2003.
7. LANL Report "Characterization of Latent Debris from Pressurized Water Reactor Containment Buildings", M. Ding et al NEA/NRC Workshop on Debris Impact on Emergency Coolant Recirculation Paper, April 26, 2004.
8. ALION-REP-OPPD-3016-001, Revision 0, "OPPD Calcium Silicate Material Characterization Report (SEM)"
9. ALION-REP-OPPD-3016-002, Revision 0, "Calcium Silicate with Asbestos Material Characterization Report (SEM)"
10. Calculation FC07010, "Calculation of Design Basis Minimum Containment Post-RAS Level"
11. Keeler and Long Report No. 06 0413, "Design Basis Accident Testing Coating Samples from Unit 1 Containment, TXU Comanche Peak SES"
12. Letter from J. Cavallo, Vice President Corrosion Control Consultants and Labs, Inc., dated September 20, 2007
13. EPRI Report No. 1011753, September 2005, for Original Equipment Manufacturers (OEM)
14. Bostelman, Jan and Zigler Gil, "Failed Coatings Debris Characterization, Prepared for BWROG Containment Group Committee, ITS Services, Duke Engineering & Services, July 21, 1998"
15. EPRI Report No. 1014883, "Plant Support Engineering Adhesion Testing of Nuclear Coating Service Level 1 Coatings," August 2007
16. Letter from OPPD (D. J. Bannister) to NRC (Document Control Desk), "Fort Calhoun Station Unit No. 1 License Amendment Request (LAR) Modification of the Containment Spray System Actuation Logic", dated July 30. 2007 (LIC-07-0052)
17. Calculation FC07431, Revision 1, GE Calculation 26A7104, "Suction Strainers Stress Analysis Report"
18. Modification EC 36443, "Install a 3/8" Spacer Under Reactor Seal Ring"
19. Calculation FC07460, Sargent & Lundy Calculation 2005-10600, "GSI 191 Evaluation of the Long Term Downstream Effects of LOCA Generated Debris"
20. ALION-REP-LAB-2352-101, Revision 0, "Test Report: Flow Erosion Testing of Cal-Sil Insulation Debris"

21. ALION-REP-LAB-2352-107, "Measurement of Localized Low Velocities in Transport Flume Testing Report"
22. Calculation FC07248, "OPPD Chemical Product Generation Report"
23. WCAP-16530, "Evaluation of Post-Accident Chemical Effects in Containment Sump Fluids to Support GSI-191"
24. WCAP-16785-NP, "Evaluation of Additional Inputs to the WCAP-16530-NP Chemical Model," May 2007
25. Calculation FC07090, Sargent & Lundy Calculation 2005-08220, Revision 0
26. GEH Document, 26A7408 Rev. 2, Fort Calhoun, "Module Head Loss Testing of Sump Strainers"
27. GEH Document, Deviation Disposition Request, 437004232-004
28. 6898-631-01, "5M-LBLOCA-FCE-Verified"
29. 6898-715-01, "11M-SBLOCA-Jacketed-Verified"
30. GENE-0000-0039-6317-R12, "Design Input Request (DIR) S0100," Rev. 12
31. 0000-0081-2633-R0, "FCS Strainer Air Ingestion Analysis"
32. 234C9215, Rev 4, "ICD, Passive Strainer, 48x33, 30 Disk"
33. Letter from OPPD (H. J. Faulhaber) to NRC (Document Control Desk) "Revised Request for an Extension to the Completion Date for Corrective Actions Taken in Response to Generic Letter 2004-02," dated June 9, 2006 (LIC-06-0067)
34. Letter from OPPD (H. J. Faulhaber) to NRC (Document Control Desk) "Correction to Revised Request for an Extension to the Completion Date for Corrective Actions Taken in Response to Generic Letter 2004-02," dated June 12, 2006 (LIC-06-0069)
35. Letter from OPPD (H. J. Faulhaber) to NRC (Document Control Desk) "Supplement to Revised Request for an Extension to the Completion Date for Corrective Actions Taken in Response to Generic Letter 2004-02," dated June 28, 2006 (LIC-06-0070)
36. WCAP-16851-P, Revision 0, "Florida Power and Light Jet Impingement Testing of Cal-Sil Insulation," dated October 2007
37. Calculation FC07078, "Recirculation Phase System Performance for Safety Injection and Containment Spray Systems"
38. GE Test Report, SO100, Report # 0000-0075-4537
39. Letter from NRC (L. R. Wharton) to OPPD (S. K. Gambhir) "Fort Calhoun Station, Unit No. 1 – Generic Letter 97-04, Assurance of Sufficient Net Positive Suction Head for Emergency Core Cooling and Containment Heat Removal Pumps" (TAC No. M99992)" dated March 7, 2000 (NRC-00-0031)
40. Letter from NRC (C. Haney) to OPPD (R. T. Ridenoure), "Fort Calhoun Station, Unit No. 1 - Generic Letter 2004-02 Extension Request Approval (TAC No. MD2323)," dated August 14, 2006 (NRC-06-0103)
41. Modification EC37048, "Replacement of Drain Covers"
42. ALION-CAL-OPPD-4089-01, Revision 0, "Fort Calhoun Station Aluminum Walkdown Report"
43. Fort Calhoun Nuclear Station GE-Hitachi "Recirc Sump Strainer Disc Crush Pressure Analysis" (FC07408)

44. NUREG/CR-6224, "Parametric Study of the Potential for BWR ECCS Strainer Blockage Due to LOCA Generated Debris," dated October 1995
45. Letter from OPPD (R. P. Clemens) to NRC (Document Control Desk), "Fort Calhoun Station, Unit No. 1, License Amendment Request (LAR) Permanent Use of Tetraborate as the Containment Building Sump Buffering Agent," dated September 11, 2007 (LIC-07-0082)
46. Letter from NRC (A. B. Wang) to OPPD (R. T. Ridenoure), "Fort Calhoun Station, Unit 1, Request for Additional Information Re: Response to Generic Letter 2004-02, Potential Impact of Debris Blockage on Emergency Recirculation During Design-Basis Accidents at Pressurized Water Reactors," (TAC No. MC 4686) dated February 9, 2006 (NRC-06-0016)
47. Letter from OPPD (H. J. Faulhaber) to NRC (Document Control Desk), "Follow-up Response to Generic Letter 2004-02, Potential Impact of Debris Blockage on Emergency Recirculation During Design Basis Accidents at Pressurized Water Reactors," dated August 31, 2005 (LIC-05-0101)
48. NEI 04-07, Pressurized Water Reactor Sump Performance Evaluation Methodology, Revision 0, December 2004, Volume 1 – Pressurized Water Reactor Sump Performance Evaluation Methodology
49. NEI 04-07, Pressurized Water Reactor Sump Performance Evaluation Methodology, Revision 0, December 2004, Volume 2 – Safety Evaluation by the Office of Nuclear Reactor Regulation Related to NRC Generic Letter 2004-02, Revision 0, December 6, 2004
50. PWROG letter to PWROG Systems and Equipment Subcommittee, "Transmittal of Additional Guidance for Modeling Post-LOCA Core Disposition with LOCADM Document for WCAP-16793-NP (PA-SEE-0312)," dated December 14, 2007
51. Letter from NRC (M. T. Markley) to OPPD (D. J. Bannister), "Fort Calhoun Station, Unit 1-Request for Additional Information Regarding License Amendment Request for Proposed Technical Specification Changes for Modification of Containment Spray System Actuation Logic" (TAC NO. MD6204) dated January 18, 2008 (NRC-08-0011)
52. Calculation FC06987, Revision 2, "Fort Calhoun Station Debris Transport Post-LOCA"
53. WCAP-16793-NP, "Evaluation of Long-Term Cooling Considering Particulate, Fibrous and Chemical Debris in the Recirculating Fluid," Rev. 0
54. NRC letter to NEI "Draft Conclusions and Limitations for use of Westinghouse Topical Report WCAP-16793-NP, Revision 0, Evaluation of Long-Term Cooling Considering Particulate, Fibrous and Chemical Debris in the Recirculating Fluid," dated February 4, 2008
55. EPRI Report No. 1003102, "Guideline on Nuclear Safety-Related Coatings," Rev. 1 (Formerly TR-109937), November 2001
56. Letter from OPPD (R. L. Phelps) to NRC (Document Control Desk), "Response to Requests for Additional Information on the Fort Calhoun Station Unit No.1 Response to Bulletin 2003-01, "Potential Impact of Debris Blockage on Emergency Sump Recirculation at Pressurized Water Reactors" dated June 11, 2004 (LIC-04-0072)

57. Letter from NRC (A. B. Wang) to OPPD (R. T. Ridenoure), "Fort Calhoun Station, Unit No. 1 Issuance of Amendment RE: Modification to Technical Specification 2.4, Containment Cooling," to Reduce Operable Containment Spray Pumps" (TAC NO. MC9297) dated October 27, 2006 (NRC-06-0147)
58. Letter from OPPD (D. J. Bannister) to NRC (Document Control Desk), "Response to Request for Additional Information Regarding License Amendment Request for Proposed Technical Specification Changes for Modification of Containment Spray System Actuation Logic," dated February 21, 2008 (LIC-08-0015)
59. Letter from NRC (A. B. Wang) to OPPD (R. T. Ridenoure), "Fort Calhoun Station, Unit No. 1 Issuance of Amendment RE: Change of Containment Building Sump Buffering Agent from Trisodium Phosphate to Sodium Tetraborate," (TAC No. MD2864) dated November 13, 2006 (NRC-06-0155)