Entergy

Entergy Nuclear Operations, Inc.
Palisades Nuclear Plant
27780 Blue Star Memorial Highway
Covert, MI 49043

February 27, 2008 10 CFR 50.54(f)

U. S. Nuclear Regulatory Commission
ATTN: Document Control Desk
11555 Rockville Pike,
Rockville, Maryland 20852

Palisades Nuclear Plant
Docket 50-255
License No. DPR-20

Supplemental Response to NRC Generic Letter 2004-02, "Potential Impact of Debris Blockage on Emergency Recirculation During Design Basis Accidents at Pressurized-Water Reactors"

Dear Sir or Madam:

The Nuclear Regulatory Commission (NRC) issued Generic Letter (GL) 2004-02 on September 13, 2004, to request addressees perform an evaluation of the emergency core cooling system (ECCS) and containment spray system (CSS) recirculation functions in light of the information provided in the GL and, if appropriate, take additional actions to ensure system function. The GL requested addressees to provide the NRC with a written response in accordance with 10 CFR 50.54(f). The request was based on identified potential susceptibility of the pressurized water reactor recirculation sump screens to debris blockage during design basis accidents requiring recirculation operation of ECCS or CSS and on the potential for additional adverse effects due to debris blockage for flow paths necessary for ECCS and CSS recirculation and containment drainage.

The Nuclear Management Company, LLC (NMC, the former license holder) responded to the GL in letters dated March 7, 2005 (ML050670014), and August 25, 2005 (ML0502500280), as well as a July 11, 2005 (ML051930570), letter that responded to a request for additional information. NMC provided additional responses to the GL on May 12, 2006 (ML061320249), and July 18, 2006 (ML061990310). On December 3, 2007 (ML073371169), Entergy Nuclear Operations Inc. (ENO) requested an extension of the completion date for the actions required by the GL. The NRC approved the due date extension to June 30, 2008, in a letter dated December 21, 2007 (ML073530640).

Enclosure 1 provides the ENO supplemental response to GL 2004-02 for Palisades Nuclear Plant (PNP). The response addresses the actions and methodologies used at PNP to resolve the issues identified in the GL. This response was prepared using

A116
NRR

guidance in the NRC's November 21, 2007, letter "Revised Content Guide for Generic Letter 2004-02 Supplemental Responses" (ML073110278). This response also used the guidance in the NRC's November 30, 2007, letter (ML073320176) on supplemental responses, that included extending the submittal due date to February 29, 2008. ENO's plans for accomplishing remaining actions are included in the enclosure.

Enclosure 2 provides attachment drawings referenced in Enclosure 1.

Summary of Commitments

This letter contains one new commitment and restates the commitment made by letter dated December 3, 2007.

New commitment:

1. Following actions to resolve GSI-191, ENO will submit a follow-up to this supplemental response within 90 days of completion of strainer testing.

Commitment made by letter dated December 3, 2007:

2. ENO will complete actions to resolve Generic Safety Issue (GSI)-191 at PNP by June 30, 2008.

I declare under penalty of perjury that the foregoing is true and correct. Executed on February 27, 2008.

Christopher J. Schwarz
Site Vice President
Palisades Nuclear Plant

Enclosures (2)

CC Administrator, Region III, USNRC
Project Manager, Palisades, USNRC
Resident Inspector, Palisades, USNRC

ENCLOSURE 1

SUPPLEMENTAL RESPONSE

TO

NRC GENERIC LETTER 2004-02

"Potential Impact of Debris Blockage on Emergency Recirculation during Design Basis Accidents at Pressurized-Water Reactors"

1. Overall Compliance:

Nuclear Regulatory Commission (NRC) Request

Provide information requested in [Generic Letter] GL 2004-02 Requested Information Item 2(a) regarding compliance with regulations.

> *GL 2004-02 Requested Information Item 2(a)*
> *Confirmation that* the [emergency core cooling system] *ECCS and* [containment spray system] CSS recirculation functions under debris loading *conditions are or will be in compliance with the regulatory requirements listed in the Applicable Regulatory Requirements section of this GL. This submittal should address the configuration of the plant that will exist once all modifications required for regulatory compliance have been made and this licensing basis has been updated to reflect the results of the analysis described above.*

Entergy Nuclear Operations, Inc. (ENO) Response

By letter dated December 21, 2007, the NRC approved a request for extension of the completion date of actions required by GL 2004-02 (Reference 1.1) to June 30, 2008, for the Palisades Nuclear Plant (PNP). In its request for extension, ENO identified the actions to be completed and provided justification for the due date extension. Upon completion of the open actions identified, ENO will have completed all the required actions to confirm that the ECCS and CSS recirculation functions under debris loading conditions at PNP are in compliance with all applicable regulatory requirements listed in the GL.

ENO has installed two passive strainer assemblies on the base slab (590 foot elevation) of the containment. The passive strainer assemblies connect to the containment sump via two containment sump downcomer pipes. These two containment sump downcomer pipes provide the post loss-of-coolant-accident (LOCA) credited flow pathway from the passive strainer assemblies to the containment sump to provide a suction source of water to the ECCS and CSS pumps.

The passive strainer assemblies are sized for an acceptable head loss based on the bounding case debris load generated following a large break LOCA in order to ensure that high pressure safety injection (HPSI) pump and CSS pump net positive suction head (NPSH) and system flow rate requirements are met. The design basis for the strainers includes providing sufficient flow area for the most limiting scenario to ensure that the design basis flow area is available to mitigate the consequences of a LOCA under post-LOCA design basis debris loading conditions.

In addition to the passive strainer assemblies, debris screens are installed on the remaining open containment sump entrance pathways, which include the four remaining downcomer pipes, the seven containment floor drains, and the two

containment sump vent lines. The reactor cavity corium plugs, located in the reactor cavity drain lines, contain pellets within the corium plug tube, tube end cap, and tube bottom cup support assembly which form a debris interceptor similar to the debris screens. These debris screens and corium plugs are intended to intercept and segregate debris outside of the containment sump envelope to ensure that post-LOCA generated debris does not enter the containment sump envelope, through these non-credited post-LOCA flow pathways. Attachment 2 of this document depicts the sump strainer modification installed at PNP.

Both the sump strainer assemblies and the debris screens meet the structural requirements set forth in the PNP Final Safety Analysis Report (FSAR) to support the NRC regulations in Title10 of the Code of Federal Regulations (10 CFR) 50.46 requiring that the ECCS have the capability to provide long-term cooling of the reactor core following a LOCA as well as General Design Criteria (GDC) 38, "Containment Heat Removal," and GDC 41, "Containment Atmosphere Cleanup," as described in the FSAR and other plant specific licensing requirements. With the installation of the aforementioned design modifications, the minimum NPSH margin of the ECCS and CSS pumps under the post LOCA conditions is predicted to be 0.95 feet water column. This NPSH margin includes an assumed head loss of 1 foot water column across the sump strainers due to chemical precipitants. Conservative approaches were applied in the hydraulic design of the strainers. The major areas of conservatism include the application of the Nuclear Energy Institute (NEI) 04-07, "Pressurized Water Reactor Sump Performance Evaluation Methodology," in determining the amount and transportation of LOCA generated debris, deterministically calculated minimum sump water inventory, and applying the debris mix that exceeds the PNP design basis requirements in the debris head loss testing.

The downstream effects on the ECCS and CSS components due to the LOCA-generated debris have been evaluated in accordance with the guidance provided to the industry by the Pressurized Water Reactor Owners Group (PWROG) report WCAP-16406-P, "Evaluation of Downstream Sump Debris Effects in Support of [Generic Safety Issue] GSI-191" (Reference 1.2). The results of the evaluation confirmed that the critical flow paths will not be clogged by the LOCA-generated debris, and the components are capable of withstanding the debris-induced wear for 30 days of continuous operation. Actions that are still open for PNP are as identified in ENO's extension request. These actions include completion of strainer testing for chemical effects and debris transport. Debris transport analysis will be used as an input for this testing and credit for debris settlement will be taken. Additional analyses will also be completed for downstream effects to address revised WCAP-16406-P, and in-vessel effects to address WCAP-16793-NP, "Evaluation of Long Term Cooling Considering Particulate, Fibrous and Chemical Debris in the Recirculating Fluid" (Reference 1.3).

No additional design modification has been identified by PNP in meeting the regulatory requirements listed in the Applicable Regulatory Requirements section of GL 2004-02.

References

1.1 NRC Letter to Mr. Michael Balduzzi, dated December 21, 2007: "Generic Letter 2004-02 "Potential Impact of Debris Blockage on Emergency Recirculation During Design Basis Accidents at Pressurized Water Reactors" Extension Request Approval for Palisades Nuclear Plant (TAC No. MC4701)" (ADAMS Accession No. ML073530640)

1.2 WCAP-16406-P, "Evaluation of Downstream Sump Debris Effects in Support of GSI-91," Revision 1, August 2007

1.3 WCAP-16793-NP, "Evaluation of Long Term Cooling Considering Particulate, Fibrous and Chemical Debris in the Recirculating Fluid," Revision 0, May 2007

2. General Description of and Schedule for Corrective Actions:

NRC Request

Provide a general description of actions taken or planned, and dates for each. For actions planned beyond December 31, 2007, reference approved extension requests or explain how regulatory requirements will be met as per Requested Information Item 2(b).

> *GL 2004-02 Requested Information Item 2(b)*
> *A general description of and implementation schedule for all corrective actions, including any plant modifications, that you identified while responding to this GL. Efforts to implement the identified actions should be initiated no later than the first refueling outage starting after April 1, 2006. All actions should be completed by December 31, 2007. Provide justification for not implementing the identified actions during the first refueling outage starting after April 1, 2006. If all corrective actions will not be completed by December 31, 2007, describe how the regulatory requirements discussed in the Applicable Regulatory Requirements section will be met until the corrective actions are completed.*

ENO Response

The following corrective action activities in association with Generic Safety Issue (GSI) -191, "Assessment of Debris Accumulation on [Pressurized Water Reactor] PWR Sump Performance," resolutions have been completed:

- Containment walkdown and debris generation and transport analysis was completed. Detailed containment walkdowns to identify and quantify the types and locations of debris sources were completed during the spring 2003 refueling outage. The walkdowns were conducted in accordance with the guidance in NEI 02-01, "Condition Assessment Guidelines: Debris Sources Inside PWR Containments" (Reference 2.1). The walkdowns focused on obtaining information on the sources, types, and location of potential debris that could be transported to the containment sump screen following a small, medium or large break LOCA. The information gathered was necessary to proceed with the analyses described in NEI 04-07.

  Walkdowns were performed to identify and quantify the types and locations of debris sources which consisted of:

  1. Gathering containment building configuration data that would be used to plan three subsequent walkdowns
  2. Identifying insulation quantity
  3. Identifying coatings
  4. Identifying foreign material

Piping walkdowns were performed to confirm, to the extent practical, that the data obtained from controlled source documents was correct. The types and quantities of insulation installed on piping in containment had been previously determined using plant as-built drawings and specifications. The walkdowns were typically conducted on an area by area basis. Insulation on piping without associated isometric drawings (typically small bore piping) was also quantified.

Similarly, walkdowns of major pieces of insulated equipment (steam generators, reactor coolant pumps, reactor, and pressurizer) were performed to confirm information obtained using as-built drawings and specifications.

General areas of the containment, including the reactor coolant loop compartments, were surveyed to collect information regarding miscellaneous debris sources that could potentially restrict flow of water through the containment sump screens. In each area (or zone), the surveys quantified items that could potentially become debris following a LOCA, e.g., fire resistant barrier materials, tape, tags, labels, dirt, dust, lint, paper, pipe banding, tie-wraps, maintenance materials, tygon tubing, gates, and filters. Significant transport paths between cubicles were also noted during the walkdowns.

- Latent debris walkdowns were completed. A "Calculation for Latent Debris (Dust & Lint) for Palisades Containment for Resolution of GSI–191," (Reference 2.2) documents the results of the Spring 2006 refueling outage containment latent debris sampling walkdown which confirmed, based on 46 sample locations within containment, that the latent debris quantity in containment is approximately 156 pounds. Therefore, the 200 pounds of latent debris quantity assumption previously used in the debris generation and transportation calculation was conservative.

- Downstream (ex-core) effects analyses have been performed on mechanical components. The downstream effects evaluation of ECCS and CSS components was performed using guidance provided to the industry by the PWROG WCAP-16406-P (Reference 2.3) as a framework. The analysis led to the decision of the replacement of the high pressure safety injection (HPSI) pumps mechanical seals and cyclone separators during 2007 refueling outage.

- Replacement of HPSI pumps mechanical seals and cyclone separators were completed during the fall 2007 refueling outage. The HPSI pumps employed a cyclone separator in the seal flush path to remove particulate debris in order to extend the life of the pump seals. The HPSI pump mechanical seal cooling cyclone separator was determined to be susceptible to fouling with the postulated fibrous material passing through the HPSI pump, potentially resulting in a loss of pump seal cooling water and premature seal failure. Also identified was the potential for fibrous debris to become lodged in the mechanical seal

small linear loading springs, potentially resulting in non-uniform pressure applied to the seal faces, resulting in premature seal failure. Therefore, in order to ensure that the HPSI pumps are capable of performing their safety related design function during their required mission time of 30 days under post-LOCA conditions, the HPSI pump mechanical seal system was replaced during the fall 2007 refueling outage, with a mechanical seal system that is not susceptible to post-LOCA debris-induced failure.

- Installation of replacement containment sump passive strainer assemblies was completed during the fall 2007 refueling outage. The configuration of the PNP containment sump, required for GL 2004-02 compliance, includes replacement of the original sump flat screens with Performance Contracting Inc. (PCI) Sure-Flow ® passive strainer module assemblies on the 590-foot elevation of containment. The passive strainers were specifically designed for PNP in order to address and resolve the GSI-191 ECCS sump blockage issue.

- Replacement of CSS valves was completed during the fall 2007 refueling outage. In order to reduce the post-LOCA hydraulic demand, and establish adequate NPSH margin when the passive strainers are aligned to the containment sump, the open/closed style CSS containment isolation valves, air operators, solenoid valves, valve position switches and air pressure regulators were replaced. The new Control Components, Inc (CCI) DRAG ® style replacement valves, actuators and accessories are capable of being placed in the OPEN/CLOSED or a fixed THROTTLED position.

- Replacement of containment sump buffering agent was completed during the fall 2007 refueling outage. This modification addressed an NRC Information Notice 2005-26, "Results of Chemical Effects Head Loss Tests in a Simulated PWR Sump Pool Environment," concern on the potential sump screen blockage due to the formation of the calcium phosphate precipitation in the sump fluid. The sump buffering agent of trisodium phosphate (TSP) was replaced with the sodium tetraborate (STB). The change from TSP to STB will have beneficial results on the post LOCA chemical precipitation and will provide relief from chemical precipitation induced head loss across the sump strainers.

- Modifications of containment base slab configuration that were completed during the 2004 refueling outage, eliminated two choke points that could hold up the post-LOCA sump volume. A door jam was installed on the access door to the clean waste receiver tank room to ensure the flow pathway to the sump strainers is clear, and the partition in the air room was replaced with a blowout panel. The panel is designed to collapse when there is a differential water level of two feet or more across the panel.

- Enhancements of programmatic control of LOCA debris sources in the containment have been implemented. Design and operational measures taken

to control or reduce the plant debris source term to prevent potential adverse effects on the ECCS and CSS recirculation functions have been implemented into the procedures and specifications. The significant changes are described in section 3.I of this document.

In order to meet the remaining regulatory requirements, ENO has scheduled the following activities. These are the same activities discussed in the ENO request for GL 2004-02 due date extension (Reference 2.5).

- Combined debris and chemical head loss testing is to be completed in the spring of 2008. This is a large flume test prototypical to plant specific parameters. PCI is contracted to conduct the test using the facility at Alden Research Laboratory (ARL). In support of the testing, a Computational Fluid Dynamics (CFD) analysis is being performed by AREVA for refining debris transport to the sump strainer.

- Revise the downstream components analysis in accordance with the recent revision of the WCAP-16406-P (Reference 2.3).

- Complete the analysis of the downstream effects on the fuel per WCAP-16793-NP (Reference 2.4).

References

2.1 NEI 02-01, "Condition Assessment Guidelines: Debris Sources Inside PWR Containments," dated April 2002

2.2 EA-MOD-2005-004-12, "Calculation for Latent Debris (Dust & Dirt) for Palisades Containment for Resolution of GSI-191," June 20, 2006, covering Sargent & Lundy Calculation 2006-06022, Revision 0, of the same name, dated May 30, 2006

2.3 WCAP-16406-P, "Evaluation of Downstream Sump Debris Effects in Support of GSI-191," Revision 1, August 2007

2.4 WCAP-16793-NP, "Evaluation of Long Term Cooling Considering Particulate, Fibrous and Chemical Debris in the Recirculating Fluid," Revision 0, May 2007

2.5 ENO letter to NRC dated December 3, 2007, "Request for Extension of Completion Date for Corrective Actions Required by Generic Letter 2004-02"

3. Specific Information Regarding Methodology for Demonstrating Compliance:

3.a. Break Selection

NRC Request

The objective of the break selection process is to identify the break size and location that present the greatest challenge to post-accident sump performance.

- *Describe and provide the basis for the break selection criteria used in the evaluation.*

ENO Response

Approaches to the break selection and debris generation are essentially unchanged from that discussed in the original August 25, 2005, response to GL 2004-02 (Reference 3.a.3) for PNP. At the time of the original response to GL 2004-02, the sump buffering agent was TSP and an active strainer design was considered for the replacement sump screen replacement. The NRC was notified of the decision for changing from an active strainer design to a passive strainer design, by letter dated May 12, 2006, (ML061320249). NEI 04-07 (Reference 3.a.1) identified that the strainer types and hole size have little if any impact on the head loss across the strainer. Also, at that time, the possible extreme impact of the TSP and calcium silicate insulation was not widely understood. Therefore, the choice of worst breaks is applicable to the new passive strainers and the new STB buffer.

Reference 3.a.2 documents the PNP debris generation calculation which includes the analyses of debris sources in the containment, break selection, and zone of influence. In selecting the break locations, the "limiting" break is identified as the break that results in the type, quantity, and mix of debris generation that is determined to produce the maximum head loss across the sump strainers, and also the maximum debris transport potential. This means that determining the maximum debris generated by any given break may not result in the maximum head loss. Therefore, the debris types and mix have to be reviewed with the possible break locations and break sizes to determine several possible limiting break locations. The break selection process is described in Section 3.3.4 of NEI 04-07. All primary coolant system (PCS) piping and attached energized piping is evaluated. Feedwater and main steam piping is not considered since the recirculation flow is not required for main steam or feedwater line breaks. Small-bore piping breaks are not evaluated because they are not bounding. There are four break locations selected for debris generation evaluation. The locations are depicted in Figure 1.

Within the component vault 1 (Figure 1), which encompasses the steam generator (SG) E-50A, several break locations were investigated. Two breaks were chosen for debris generation evaluation. Break S1 on a 42" hot leg was chosen from available PCS

breaks. Break S3 on the 30" cold leg suction 1B line was chosen for another PCS break that would affect a large quantity of insulation. Breaks on other piping such as the safety injection line and the pressurizer surge line were also considered, but due to the compactness of the vaults and smaller diameter of these lines, breaks in these lines would be bounded by the other breaks in the PCS piping.

In compartment vault 2, which contains SG E-50B, the 42" hot leg was chosen as the S2 break. This break will yield the largest amount of calcium silicate insulation. The other PCS lines and the smaller safety injection line were considered, but would be bounded by the other breaks chosen in each vault.

The break location S4 was selected for the alternate methodology per NEI 04-07 guidance:

- A complete guillotine break of the largest line connected to the PCS piping, or
- A main loop line break equivalent to a guillotine break of a 14-inch Schedule 160 pipe

The largest lines connecting to the PCS are the 12" safety injection, 12" shutdown cooling, and 12" pressurizer surge line. Since these lines are smaller than the recommended NEI pipe break, a 14-inch schedule 160 pipe break is used. For this break (S4), according to the methodology, a double-ended guillotine break is modeled.

The most insulation on equipment and piping would be damaged from a break on the hot leg. Therefore, the alternate break is a 14-inch schedule 160 break located on the hot leg near the connection to steam generator E-50A. This break will be in the same location as the S1 break.

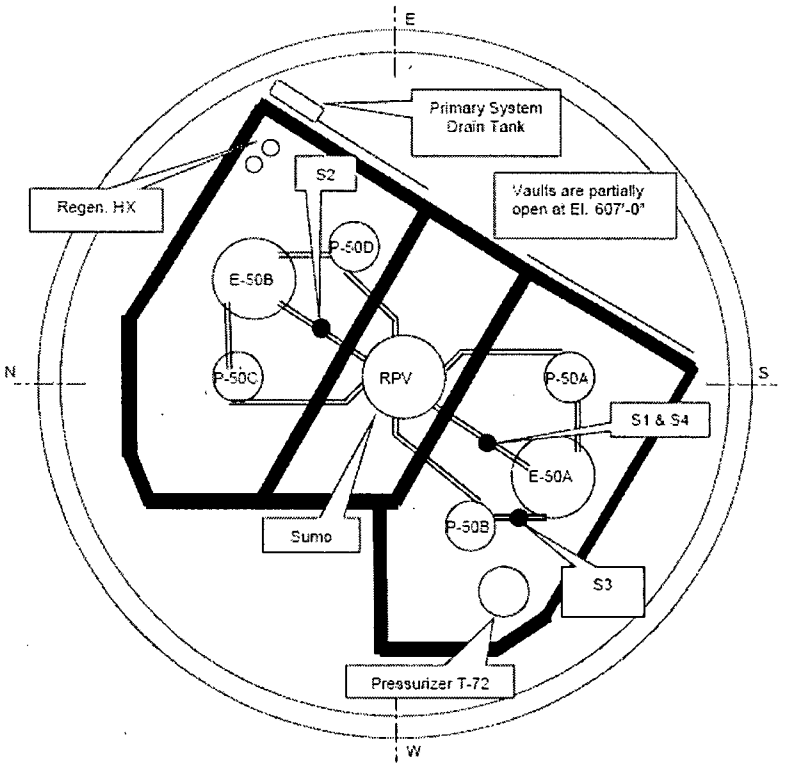

Figure 1, Break Locations

NRC Request

- *State whether secondary line breaks were considered in the evaluation (e.g., main steam and feedwater lines) and briefly explain why or why not.*

ENO Response

Feedwater and main steam piping is not considered since the recirculation flow is not required for main steam or feedwater line breaks.

NRC Request

- *Discuss the basis for reaching the conclusion that the break size(s) and locations chosen present the greatest challenge to post-accident sump performance.*

ENO Response

As it was presented in the preceding discussion, several break locations have been selected for the determination of the maximum debris laden head loss across the

strainers. In selecting the break locations, the "limiting" break is identified as the break that results in the type, quantity, and mix of debris generation that is determined to produce the maximum head loss across the sump screen and also the maximum debris transport potential. This means that determining the maximum debris generated by any given break may not result in the maximum head loss. Therefore, the debris types and mix have to be reviewed with the possible break locations and break sizes to determine several possible limiting break locations.

References

3.a.1 NEI 04-07, "Pressurized Water Reactor Sump Performance Evaluation Methodology," Revision 0, December 2004

3.a.2 EA-MOD-2005-04-06, "Acceptance of Debris Generation" Calculation 2005-01340, Revision 1

3.a.3 Nuclear Management Company (NMC) letter to NRC dated August 25, 2005, "Nuclear Management Company Response to Generic Letter 2004-02, "Potential Impact of Debris Blockage on Emergency Recirculation During Design Basis Accidents at Pressurized-Water Reactors," for Palisades Nuclear Plant"

3.b. Debris Generation/Zone of Influence (ZOI) (excluding coatings)

NRC Request

The objective of the debris generation/ZOI process is to determine, for each postulated break location: (1) the zone within which the break jet forces would be sufficient to damage materials and create debris; and (2) the amount of debris generated by the break jet forces

- *Describe the methodology used to determine the ZOIs for generating debris. Identify which debris analyses used approved methodology default values. For debris with ZOIs not defined in the guidance report (GR)/safety evaluation (SE), or if using other than default values, discuss method(s) used to determine ZOI and the basis for each.*

- *Provide destruction ZOIs and the basis for the ZOIs for each applicable debris constituent.*

ENO Response

The LOCA generated debris analysis for PNP is documented in Reference 3.b.1 which defines the debris sources, break selections, and ZOI of the debris. The methodologies used in the determining the LOCA generated debris mix are described below.

<u>Piping and Equipment Insulation</u>

The applicable ZOI radius is 17.0 diameters (D) for Nukon, 5.45 D for jacketed calcium silicate, and 2.0 D for Transco reflective metal insulation (RMI). Insulation ZOI of 17 D is applied to the other insulation types (fiberglass, mineral wool, site-manufactured).

The ZOI for qualified coatings is 10.0 D. All the unqualified coating inside containment is assumed to be failed under a LOCA scenario.

Insulation drawings, piping isometric drawings, and information from an inventory of insulation volumes for piping and equipment have been compiled for each insulation type. The piping layouts from the isometric drawings and area piping drawings were combined with information provided for each line from the plant insulation drawings and specifications, including insulation type and thickness. Insulation types are conservatively modeled where multiple insulation types are provided or where the order of multiple insulation types along a pipe segment is not known. This information was used to create a spreadsheet with node points for each length of pipe, elbow, etc. If not provided on piping drawings, valve locations are approximate and lengths are conservatively assumed. Each directional change and intermediate points along longer lengths of pipe were given node points. The distance between node points is

approximately two feet. These node points were given incremental coordinates with respect to each other with information from each isometric drawing.

Global coordinates were then determined by locating a known starting point, with the center of containment at the (0, 0) point. The global coordinates for the lines were found from where the pipe tied in with a piece of equipment, a containment penetration, or with another pipe. Occasionally, the area piping diagrams were used to determine the starting coordinate with respect to the center of containment. Emphasis is given to the global coordinates of the piping nodes inside the vaults to reduce the effects of drawing inaccuracies. The (X, Y, Z) axis uses south as positive X, west as positive Z, and up as positive Y. This activity was performed for each vault. Piping outside the vaults (except near openings to the vault at containment elevation 607'-0") is either excluded from the model or the insulation type zeroed out such that it is not included as debris. This includes the heating steam and condensate return lines and the service water supply and return lines.

The spreadsheet uses the pipe outside diameter as input, the insulation thickness, and the insulation type, along with an insulation factor. The factor is 1.0 for pipe and elbows, and 1.5 for valves where no detailed insulation data is provided based on the typical valve diameter as compared to the associated pipe. These numbers, along with the insulation length that is calculated from the global coordinates, gives an insulation volume for a given segment of pipe. Equipment is also modeled in this fashion.

With this insulation volume and location information, a global coordinate can be chosen for a pipe break, and an insulation type selected, and all of the insulation of that type that is within the applicable ZOI is summed. By using this method with the various insulation types, a total insulation volume can be determined for any break location. By narrowing the break locations down to the applicable high energy lines (the primary piping, safety injection, and pressurizer surge line), a debris total can be determined. Break locations are selected in 5-foot increments along the applicable piping to determine the maximum worst case debris mix. Each ZOI encompasses the affected piping and equipment for that particular break. Vault area(s) shielded by a large equipment and/or structure are also indicated where applicable.

Pipes and equipment are modeled as one-dimensional lines with the centerline of the pipe or equipment serving as the coordinate points. The equipment (SG, pressurizer, regenerative heat exchangers, and primary system drain tank) is modeled as a line at the centerline of the equipment with 1'-0" increments. The coordinates for the centerline of the equipment will be different than the outer surface of the insulation, and for this reason the equipment is also checked against plan views of piping and structural drawings to ensure that any break would not accidentally exclude some outside portions of the equipment insulation. To account for slightly different coordinates for the outer surfaces of the large lines and the equipment, a ZOI factor of 1.1 is used when determining insulation volumes. This will include any pieces of insulation that may have fallen just outside of the ZOI due to the coordinate chosen as

the pipe centerline. In addition, some isometric drawings note that the actual as-built dimensions may vary slightly, and actual dimensions are found in the stress calculation. The ZOI factor of 1.1 should adequately account for any minor changes in the information found on the drawings. This factor also accounts for any portions of piping insulation that has damaged jacketing.

RMI consists of layers of thin metal foils surrounded by metal jacketing. Therefore, the insulation is not solid like fiberglass insulation. For this reason, the surface area of the metal foils contained within the jacketing is calculated, rather than a volume. The spreadsheet automatically calculates a volume for the insulation, regardless of insulation type. The RMI also has an air gap between the pipe and the insulation of ¾" according to insulation drawings for the reactor vessel and loop piping. The area of the metal foils is calculated manually by dividing the insulation volume by the insulation thickness to determine the average surface area. For the foil area, the surface area is multiplied by the number of foils to determine the total foil area. The primary loop piping, primary coolant pumps and the reactor pressure vessel (RPV) have nine layers of foil on the RMI sections. The pressurizer shell is insulated with mineral wool, and also contains a layer of metal foil. This foil was calculated separately.

Heating steam and condensate return piping lines were not modeled in the spreadsheet. These lines did not have isometric drawings associated with them, and the lines travel along the containment liner with 1" thick fiberglass insulation, however, the possibility that some contain calcium silicate insulation cannot be ruled out. The actual layout of the lines falls entirely outside of either vault. Because the largest breaks and the maximum debris potential are within the vault, the lines will not affect the debris generation calculation, as they are jacketed and will be outside of the ZOI affected area.

In addition, other lines with insulation fall outside of any break locations, and therefore the insulation is not counted in any of the tables or the attachments. The service water supply and return line are both covered with 1-inch thick anti-sweat fiberglass and are located at the 590'-0" containment elevation. These lines do not pass into the vaults or near of the openings on the east side at the 607'-0" containment elevation, and will not be in the ZOI for any postulated breaks. The lines are not shown on the detailed calculation sheets since their volume of insulation would be zero in the break ZOI. The aluminum jacketing on the portion of the service water piping that resides in the sump below the normal post-LOCA water level is, however, included as submerged metal in the aluminum corrosion analysis.

Several lines contain unjacketed sections of insulation, according to GSI-191 walkdown results. Unjacketed calcium silicate or fiberglass will gradually deteriorate under containment spray conditions and will become a debris source. For this reason, these sections of insulation are tabulated and included as a separate item, even though they are outside of the ZOI-affected area for any postulated break. The regenerative heat exchanger also contains unjacketed calcium silicate, which is outside any postulated

ZOI, so this volume will also be included as a separate item in the conclusion section table.

Coatings

Coatings are covered in the Debris Generation Calculation in section 3.h of this document.

Latent Debris

Latent debris includes dirt, dust, lint, fibers, etc. As provided by NRC NEI 04-07 safety evaluation (SE), (NEI 04-07 Vol. 2, "Safety Evaluation by the Office of Nuclear Reactor Regulation Related to NRC Generic Letter 2004-02," Revision 0, December 6, 2004), a value of 200 pounds of latent debris was used in the absence of representative sample data. Therefore, 200 pounds will be used as the latent debris quantity. A later walkdown in the 2006 refueling outage took actual representative samples from within containment. A calculation (Reference 3.b.2) reducing the raw data from debris samples arrived at a value of 156 pounds of latent debris. This value represents the upper 90% confidence level of the collected data. The 200 pound guidance value was retained to provide conservatism to cover future containment conditions. Additional discussion of the latent debris is included in section 3.d of this document.

Foreign Materials

Foreign materials inside containment may become debris during a LOCA or during containment spray. Examples of foreign materials are electrical tape, stickers, conduit tags, etc.

The total areas of the foreign materials are tabulated in the results summary. The foreign materials found within the containment are self-adhesive labels, stickers, placards, etc. Stickers and placards attached with adhesives, tape, and tags are accounted for by reducing the wetted flow area of the sump screen by 75% of the total of the original single-sided area of the item per Reference 3.b.5, Section 3.5.2.2.2. A 10% multiplier is added to all of the foreign material totals. The lead blankets listed in the results table were removed from the foreign material list in that they were in containment as an approved plant modification. Reference 3.b.3 has tested prototypical blankets using identical jacket material and found that it is capable of surviving direct break jet blasts without fragmenting the jacket or the lead into pieces that will likely transport to the sump. If the in-progress refined debris transport analysis proves that this is not the case, ENO will insert Alpha Maritex® cloth, in amounts modeled, to equal the amount that is determined to be within the ZOI of the worst break, into the combined debris and chemical precipitation tests at ARL.

NRC Request

- *Identify if destruction testing was conducted to determine ZOIs. If such testing has not been previously submitted to the NRC for review or information, describe the test procedure and results with reference to the test report(s).*

ENO Response

Applications of ZOIs for PNP are consistent with the guidelines provided in NEI 04-07. There were no ZOI destruction test results, other than those given in NEI 04-07, applied in determining the LOCA-generated debris. In evaluating the ZOI for lead blankets, the Reference 3.b.3 methodology is used.

NRC Request

- *Provide the quantity of each debris type generated for each break location evaluated. If more than four break locations were evaluated, provide data only for the four most limiting locations.*

ENO Response

<u>Results of the Debris Generation Calculation</u>

The following table summarizes the debris generation for the analyzed break scenarios.

Summary of LOCA Generated Debris					
Debris Type	**Units**	**Break S1**	**Break S2**	**Break S3**	**Break S4**
INSULATION					
Nukon / Thermal Wrap	[ft^3]	1224.6	1129.8	866.5	295.2
Calcium Silicate	[ft^3]	35.5	61.0	21.9	0
Transco RMI Foil	[ft^2]	1095.5	500.8	1427.8	501.5
Fiberglass	[ft^3]	159.1	49.2	158.2	0.1
Unjacketed Calcium Silicate - (on regenerative heat exchanger E-56, various piping, affected by spray)	[ft^3]	50.8	50.8	50.8	50.8
Unjacketed Fiberglass - (various piping, affected by spray)	[ft^3]	0.6	0.6	0.6	0.6
Unjacketed Nukon - (on E-56, various piping, affected by spray)	[ft^3]	2.6	2.6	2.6	2.6
COATINGS					
Carboline - Phenoline 300 Primer	[ft^3]	2.4	1.8	2.4	0.6
Carboline - Phenoline 300 Finish	[ft^3]	2.5	1.9	2.5	0.7
Carboline - Carbozinc 11	[ft^3]	1.7	1.2	1.7	0.5
Inorganic Zinc Silicate	[ft^3]	1.4	1.5	1.4	0.4
Aluminum Paint	[ft^3]	0.008	0.008	0.008	0.002
Zinc Chromate	[ft^3]	0.006	0.006	0.006	0.002
Carboline 3912	[ft^3]	0	0.1	0	0
QUALIFIED COATINGS TOTAL	[ft^3]	8.014	6.514	8.014	2.204
UNQUALIFIED COATINGS	[ft^3]	17.4	17.4	17.4	17.4
LATENT DEBRIS	[lb_m]	200	200	200	200
Marinite Board Fiber	[ft^3]	12.8	12.8	12.8	12.8
FOREIGN MATERIALS					
Miscellaneous	[ft^2]	113.4	113.4	113.4	113.4
Signs (metal) (75% area)	[ft^2]	1.6	1.6	1.6	1.6
Signs (plastic) (75% area)	[ft^2]	9.9	9.9	9.9	9.9
Stickers (75% area)	[ft^2]	31.0	31.0	31.0	31.0
Tags (metal) (75% area)	[ft^2]	12.62	12.62	12.62	12.62
Tags (plastic & paper) (75% area)	[ft^2]	19.5	19.5	19.5	19.5
Tape (75% area)	[ft^2]	346.9	346.9	346.9	346.9
Lead Blankets (Alpha-Maritex cloth)	[ft^2]	4156	6364	4156	4156
TOTAL FOREIGN MATERIALS	[ft^2]	**4690.92**	**6898.92**	**4690.92**	**4690.92**
TOTAL FOREIGN MATERIALS Without Blankets	[ft^2]	**534.92**	**534.92**	**534.92**	**534.92**

NRC Request

- *Provide total surface area of all signs, placards, tags, tape, and similar miscellaneous materials in containment.*

ENO Response

The total surface area of the all signs, placards, tags, tape, and similar miscellaneous materials are listed in the table above.

References

3.b.1 EA-MOD-2005-04-06, Revision 1, "Acceptance of Debris Generation Calculation 2005-01340," February 12, 2007

3.b.2. EA-MOD-2005-004-12, "Calculation for Latent Debris (Dust & Dirt) for Palisades Containment for Resolution of GSI-191," June 20, 2006

3.b.3 WCAP-16727-P, "Evaluation of Jet Impingement and High Temperature Soak Tests of Lead Blankets For Use Inside Containment of Westinghouse Pressurized Water Reactors," February 2007. And, Westinghouse Report by C.H. Hutchins, "Evaluation of the Impact on Systems at Callaway Plant Resulting From Installation of Lead Blankets Inside Containment," August 24, 2004

3.b.4 EA-EC496-04, "Containment Sump Passive Strainer Assembly Surface Area Flow and Volume (PCI Calc TDI-6013-01)," dated February 4, 2007

3.b.5 Safety Evaluation by the Office of Nuclear Reactor Regulation Related to NRC Generic Letter 2004-02, Nuclear Energy Institute Guidance Report (Proposed Document Number NEI 04-07), "Pressurized Water Reactor Sump Performance Evaluation Methodology," issued December 6, 2004

3.c. Debris Characteristics

NRC Request

The objective of the debris characteristics determination process is to establish a conservative debris characteristics profile for use in determining the transportability of debris and its contribution to head loss.

- *Provide the assumed size distribution for each type of debris.*

ENO Response

In conjunction with the resolution on the chemical effects, ENO plans to perform a combined debris and chemical precipitation head loss test. The test is a large flume testing prototypical to plant-specific configurations that incorporates the effects of debris settlement in the sump fluid. The relevant transport and head loss analyses are to be revised accordingly.

The original head loss calculations (Reference 3.c.1) were done in 2005, and were referenced in the NMC's original GL 2004-02 reply on August 25, 2005. That analysis was applied in choosing debris mix and determining the worst break. It used only what has become known as "baseline" debris transport analysis and relied almost exclusively upon the NEI 04-07 NRC-reviewed values, or on the references listed in NEI 04-07. Chemical debris was not involved; however, CalSil insulation was included as a "particulate."

Fraction of Fibrous Debris Arriving at the Sump

Debris Type	Size Distribution Fraction	Debris Transport Fraction	Fraction of Debris at Sump Screen
Fines	0.08	1.00	0.08
Small	0.25	1.00	0.25
Large	0.32	0.90	0.29
Intact	0.35	0.00	0.00
Sum	1.00	----	0.62

Fraction of RMI Debris Arriving at the Sump

Debris Type	Size Distribution Fraction	Debris Transport Fraction	Fraction of Debris at Sump Screen
Fine	0.75	0.75	0.563
Large	0.25	0.00	0.000
Sum	1.0	----	0.563

NRC Request

- *Provide assumed specific surface areas for fibrous and particulate debris.*
- *Provide bulk densities (i.e., including voids between the fibers/particles) and material densities (i.e., the density of the microscopic fibers/particles themselves) for fibrous and particulate debris.*

ENO Response

The NUREG/CR-6224, "Parametric Study of the Potential for [Boiling Water Reactor] BWR ECCS Strainer Blockage Due to LOCA Generated Debris," constants for specific surface area in the table below were applied in the head loss calculation for the passive strainer assembly. Additionally, the NUREG/CR-6224 correlation was applied to the initial sizing of the strainer design. However, the final PNP strainer design is based on testing prototypical plant configurations.

NUREG/CR-6224 Design Inputs							
	Unit	Quantity	As-Fab Density (lbm/ ft^3)	Solid Density (lbm/ ft^3)	Volume (ft^3)	Mass (lbm)	Specific Surface Area Sv (ft^2 / ft^3)
Fibers							
Nukon	ft^3	1,091.7	2.4	159	1,091.7	2,620.1	173,913
Latent Fiber	lbm	30.0	2.4	159		30.0	173,913
Fiber Glass	ft^3	49.7	5.5	159	49.7	273.4	173,913
Particulate							
Phenolic Epoxy Coatings	lbm	66.6	18.06	100	3.8	68.6	182,880
IOZ Coatings	lbm	247.5	91.68	457	2.7	247.5	182,880
Alkyd Coatings	lbm	342.1	19.65	98	17.4	342.1	182,880
Calcium-Silicate	lbm		14.5	100			457,200
Latent Particulate	lbm	170	100	156	0.93	144.5	462,000
Marinite Board	ft^3	11.5	14.5	144	11.5	166.8	365,760

Note that all coatings used the same particle size and specific surface area

To facilitate a holistic approach to head loss testing, a CFD model of the PNP containment sump is being performed at Alden Research Laboratory (ARL) under the direction of AREVA.

The calculated debris amounts will be used by AREVA, along with the CFD results and debris characteristics inherent in their standard methodology, to compute the quantity, size, and amount of debris that arrives at the screens. This debris, or surrogates for this debris, will be used in the ARL large flume test that forms the basis for the design of the PNP containment sump strainers. Also, included in this flume test will be scaled amounts of the chemical precipitates that are predicted by the PWROG WCAP-16530-NP (Reference 3.c.3) spreadsheet, as modified by WCAP-16785-NP (Reference 3.c.4) for aluminum and silicon effects. The debris will be generated per WCAP-16530-NP Section 7, and PCI's white paper on debris generation (Reference 3.c.2).

Upon successful completion of the "bounding design basis test," the appropriately scaled amount of debris and chemical precipitates in the flume during that test and the pressure drop measured in that test will become the design basis of the PNP sump strainers.

NRC Request

- *Provide the technical basis for any debris characterization assumptions that deviate from NRC-approved guidance.*

ENO Response

The existing technical bases for debris characterization assumptions are consistent with the NRC-approved guidance. See also section 3.o. for discussion of future testing and analysis.

References

3.c.1 Palisades EA-MOD-2005-04-10, "Head Loss Calculations Supporting Resolution of GSI-191," August 3, 2005

3.c.2 PCI White Paper, "Sure-Flow ® Suction Strainer – Testing Debris Preparation & Surrogates," Technical Document No. SFSS-TD-2007-004, Revision DRAFT-10, November 1, 2007.

3.c.3 WCAP-16530-NP, "Evaluation of Post-Accident Chemical Effects in Containment Sump Fluids to Support GSI-191," Revision 0, PWROG, Westinghouse Electric Company LLC, February 2006.

3.c.4 WCAP-16785-NP, "Evaluation of Additional Inputs to the WCAP-16530-NP Chemical Model," Revision 0, PWROG, Westinghouse Electric Company LLC, May 2007.

3.d. Latent Debris

NRC Request

The objective of the latent debris evaluation process is to provide a reasonable approximation of the amount and types of latent debris existing within the containment and its potential impact on sump screen head loss.

- *Provide the methodology used to estimate quantity and composition of latent debris.*

ENO Response

The quantity of latent debris in containment is documented in the "Calculation for Latent Debris (Dust & Lint) for Palisades Containment for Resolution of GSI – 191" (Reference 3.d.1). This calculation documents the results of the containment latent debris sampling walkdown which confirmed, based on 46 sample locations within containment, that the latent debris quantity in containment is approximately 156 pounds. Therefore, the 200 pounds of latent debris quantity assumption previously used in the debris generation and transportation calculation was conservative.

The latent debris evaluation provided a reasonable approximation of the amount and types of latent debris existing within the containment and its potential impact on sump screen head loss. A statistical approach was used to determine the amount of latent debris accumulated in the PNP containment area that will impact the assessment of effects of GSI-191 events. A 90% confidence level was used for this calculation.

NRC Request

- *Provide the basis for assumptions used in the evaluation.*

ENO Response

It was assumed that the debris is normally distributed for a given surface type. This assumption is supported by walk-down observation that debris distribution appeared to be uniform for a given surface type. Vertical surfaces typically do not gather significant amount of dust and lint, hence, vertical sample weights are generally lower than the weights of the horizontal samples.

Also assumed were the duct run, cable tray run and piping run dimensions identified through review of heating ventilation and air conditioning (HVAC) duct, cable tray and piping drawings. Various structural steels, concrete, equipment, and other miscellaneous components were identified from available drawings. Where applicable, dimensions were extracted by scaling from these drawings. Dimensions were

approximated on the conservative side. Additional lengths were added in the area calculation to account for any missing items, and to add additional conservatism.

A final assumption was made due to limited access to horizontal HVAC ducts that no samples were taken of this type of surface. Samples collected for horizontal cable trays were used for horizontal HVAC ducts due to their structural similarities in surface areas.

NRC Request

- *Provide results of the latent debris evaluation, including amount of latent debris types and physical data for latent debris as requested for other debris under c. above.*

ENO Response

"Calculation for Latent Debris (Dust & Lint) for Palisades Containment for Resolution of GSI–191" (Reference 2.2) documents the results of the spring 2006 refueling outage containment latent debris sampling walkdown which confirmed, based on 46 sample locations within containment, that the latent debris quantity in containment is approximately 156 pounds.

NRC Request

- *Provide amount of sacrificial strainer surface area allotted to miscellaneous latent debris.*

ENO Response

A postulated amount of 200 pounds latent debris was characterized as 30 pounds of fibrous debris and 170 pounds particulate debris. These two debris types were incorporated into the total LOCA generated debris in sizing the total required strainer surface area. There is no specific strainer surface area allocated to the miscellaneous latent debris.

<u>References</u>

3.d.1 EA-MOD-2005-004-12, "Calculation for Latent Debris (Dust & Lint) for Palisades Containment for Resolution of GSI-191," Revision 0, July 18, 2006

3.e. Debris Transport

NRC Request

The objective of the debris transport evaluation process is to estimate the fraction of debris that would be transported from debris sources within containment to the sump suction strainers.

- *Describe the methodology used to analyze debris transport during the blowdown, washdown, pool-fill-up, and recirculation phases of an accident.*

ENO Response

Two different debris transport analyses methods have been used for PNP.

Original Method

The original effort reported in the response to GL 2004-02 used the "baseline" method (Reference 3.e.1). This method uses only the default generically accredited transport attrition allowed by NEI 04-07 in the decision trees given on page 3-53.

No credit is taken for settlement of debris, other than that incorporated into NEI 04-07 generic tables, in the original "baseline" analysis for head loss across the sump screen.

The material size distributions from Reference 3.e.1 are given in tables in section 3.c. The debris transport tables, and the table giving the final quantities that reach the sump, are also included in Section 3c.

Debris transport is the estimation of the fraction of debris that is transported from debris sources (break locations) to the sump screen. There are four major debris transport modes, listed below, which are considered, in accordance with the guidance provided in NEI 04-07, Section 3.6.1.

- Blowdown Transport - the horizontal and vertical transport of debris by the break jet
- Washdown (Containment Spray) Transport - the vertical transport by the containment sprays/break flow
- Pool Fill-up Transport - the horizontal transport of the debris by break and containment spray flows to active and inactive areas of basement pool
- Recirculation Transport - the horizontal transport of the debris in the active portions of the basement pool by the recirculation flow through the ECCS system

A transport analysis is performed for fibrous and RMI debris using a combination of the simple methodology presented in NEI 04-07 and the associated SER. PNP is assumed to have a highly compartmentalized containment for this analysis. No curbs or debris

interceptors are assumed to be in the containment sump pool to inhibit material movement.

The below decision trees were used to translate the debris to the sump. Note that the fiberglass erosion effect was treated as a transport effect which served to move large pieces to the sump as fines. Assuming 90% erosion of Nukon-type fiberglass is known to be conservative since tests in prototypical sump water exist that demonstrate only 10% erosion per 30 days.

Figure 3.e.1, Transport Logic Tree for Small Fibrous Debris

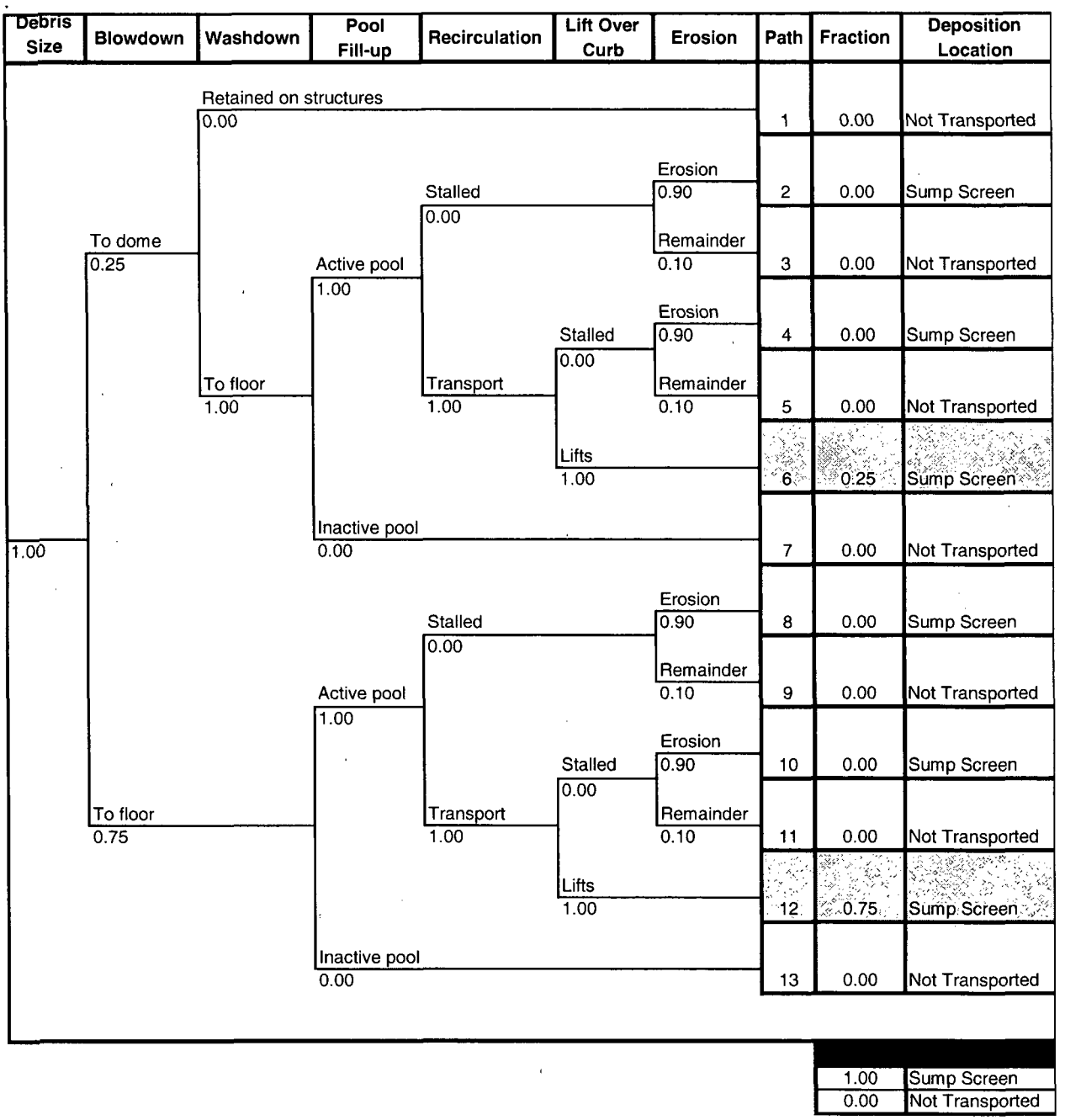

Figure 3.e.2, Transport Logic Tree for Large Fibrous Debris

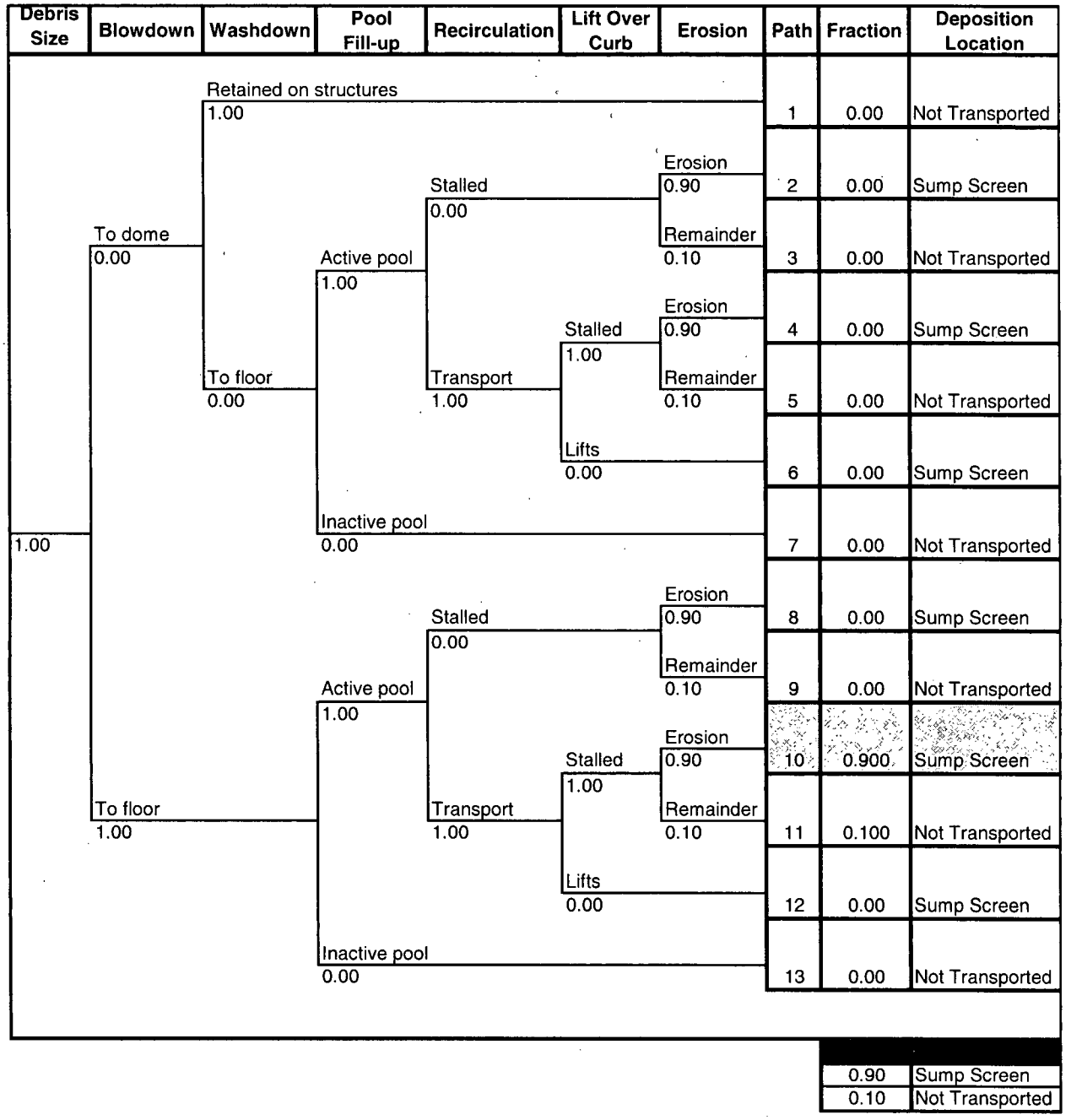

Figure 3.e.3, Transport Logic Tree for Intact Fibrous Debris

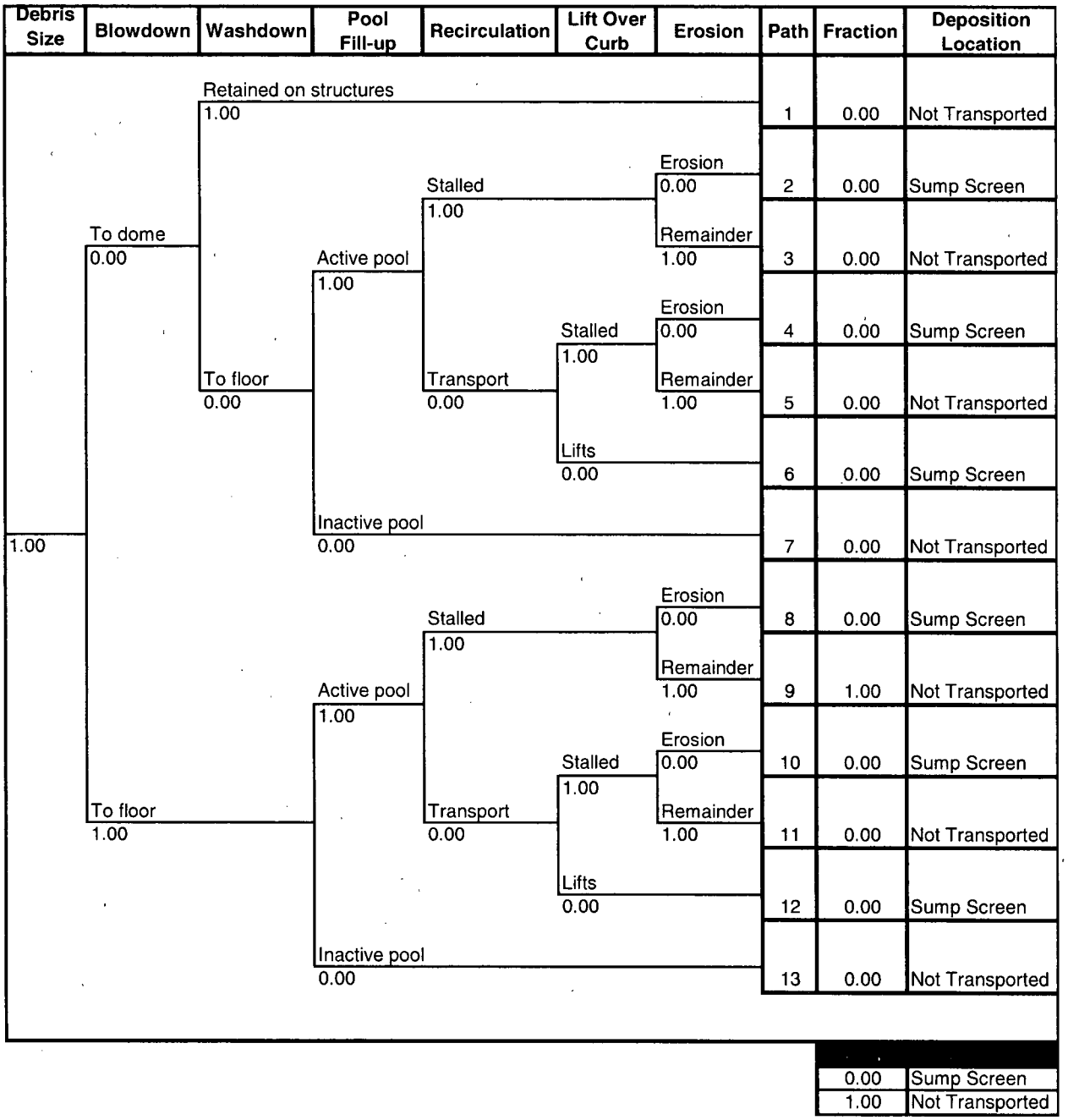

Figure 3.e.4, Transport Logic Tree for Small Reflective Metal Insulation Debris

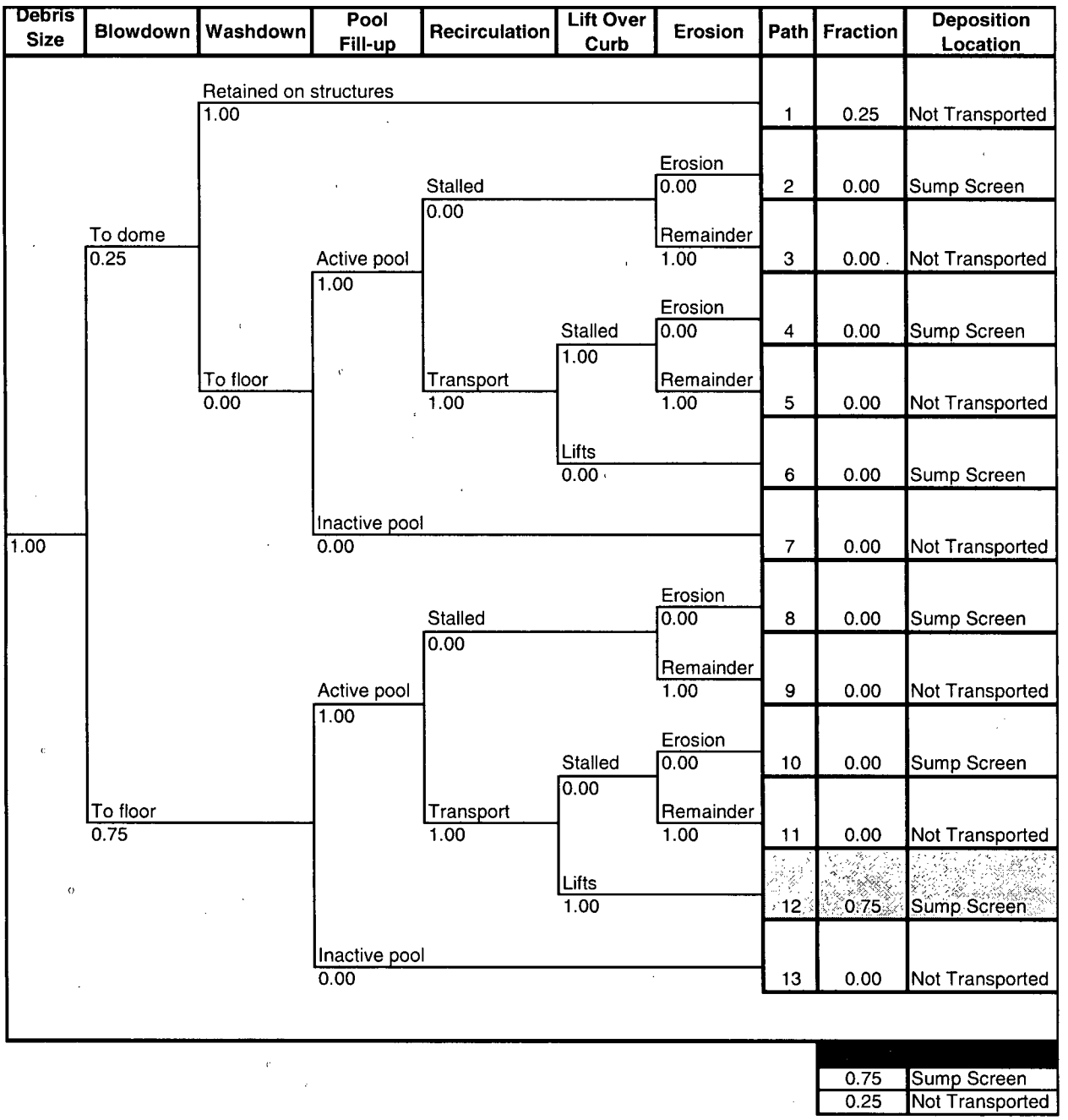

Figure 3.e.5, Transport Logic Tree for Large Reflective Metal Insulation Debris

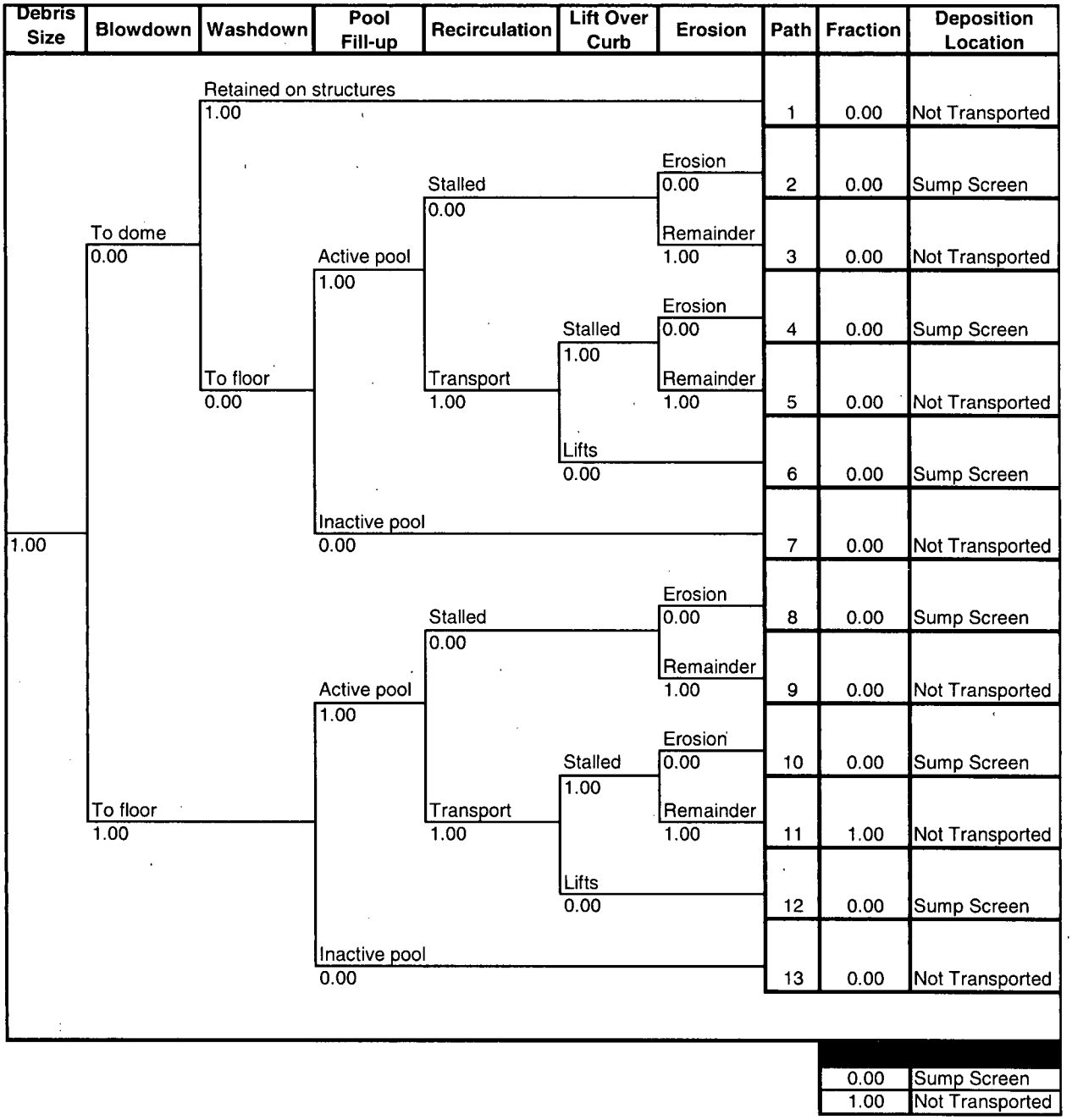

Fibrous Debris

The fibrous debris was classified into four categories based on transport properties so that transport of each type could be analyzed independently.

The four categories are fines, small piece debris, large piece debris, and intact debris. Fines and small pieces fall into the small fines category of the two category size distribution suggested in NEI 04-07. Similarly, large pieces and intact pieces fall into the large pieces category of the two category size distribution.

Low density fiberglass (LDFG) debris generation data from the air jet impact tests (AJIT), and the Ontario Power Generation (OPG) debris generation tests are used. This is consistent with the NRC NEI 04-07 SE, Appendices II and VI, and the PWR parametric analyses performed in NUREG/CR-6762, "GSI-191 Technical Assessment: Parametric Evaluations for Pressurized Water Reactor Recirculation Sump Performance," Volume 3.

Consistent with the guidance in the NRC NEI 04-07 SE, and the calculations in section 3b of this submittal, which use $R_{ZOI}/D = 17.0$ for fibrous insulation debris, a fraction of small fines less than 60% (NEI 04-07 suggested value) is used. Based on the results of the AJIT and OPG debris generation tests, 33% of all fibrous insulation within the ZOI is modeled as becoming fines or small debris. Thus, 67% of all fibrous insulation within the ZOI is modeled as becoming either large debris or remaining intact.

To determine the appropriate split between fine and small debris, the results of the AJIT are used. The AJIT indicated that, when insulation was completely destroyed, a maximum of 25% of the insulation was too fine to collect by hand, i.e., 8% (0.25 x 0.33) of the fibrous insulation within the ZOI becomes fine debris when destroyed. This implies that 25% [(1-0.25) x 0.33] of the fibrous insulation within the ZOI becomes small debris when destroyed.

To determine the appropriate split between large and intact debris, the results of the AJIT are also used. Per the guidance provided in the NRC NEI 04-07 SE, Appendix VI, 35% of the fibrous insulation within the ZOI is modeled as intact debris, leaving 32% as large piece debris.

Therefore, the initial (prior to erosion) fibrous debris category distribution is as follows: 8% fines, 25% small pieces, 32% large pieces, and 35% intact.

Transport logic trees are developed for small and large fibrous debris. A transport logic tree is not developed for fines since all fines transport to the sump screen. Per the guidance in NEI 04-07, Section 3.6.3.1, 25% of small debris is ejected upward during blowdown transport, but is later transported to the sump pool during containment spray washdown. All large and intact debris is transported to the sump

pool during blowdown. Once in the sump pool, the large debris is subject to erosion. The bulk (90%) of large fibrous debris erodes into fines which transport to the sump screen per the guidance provided in the NRC NEI 04-07 SE, Appendix III. Intact debris does not erode, consistent with the NRC NEI 04-07 SE. The transport logic trees for fibrous debris are shown in Figures 3.e.1 through 3.e.3 above.

The sizeable transport fraction for large fibrous debris is due to its erosion into small fines over the course of the LOCA. The 90% erosion fraction is based on a 30-day long-term recirculation mission time. It is determined analytically using erosion data from NUREG/CR-6773, "GSI-191: Integrated Debris-Transport Tests in Water Using Simulated Containment Floor Geometries," which found that 0.3% of fibrous debris erodes into fines per hour in deep pools (>16 inches) and the following equation from the NRC NEI 04-07 SE, Appendix III:

$$f_{eroded} = 1-(1-rate)^{hours}$$

Applying this equation, approximately 7% $[1-(1-0.003)^{24}]$ of large fibrous debris erodes in the first 24 hours. Therefore, use of a 90% erosion factor for large debris is overly conservative at the onset of recirculation.

At 30 days into the transient, the sump water temperature and the cooling requirements for the plant will be significantly reduced, NPSH will be improved due to lower sump temperatures and recirculation flow can be reduced.

Transco RMI Debris

Palisades RMI uses aluminum foil inside the 3 layer stainless steel insulation panel structure. The RMI foil debris is categorized into two size categories: small fines (<6 inches) and large pieces. In the debris generation calculation, as discussed in section 3b, RMI on piping within the ZOI is considered completely destroyed. On the large pieces of equipment, the insulation impacted by the break jet is decomposed into small and large pieces of RMI for the piping, but the insulation on the back sides of the equipment is considered to remain intact and is identified as large RMI. Guidance provided in the NRC NEI 04-07 SE, Appendix II, suggests the quantity of debris from the decomposed RMI should be reduced further.

The damage fraction for Transco RMI potential debris volume is 75% per the NRC NEI 04-07 SE, Table 11-7. This distribution is consistent with that presented in NEI 04-07 (75% small fines, 25% large debris). The evaluation for PNP considers the available Transco RMI debris is reduced by 25%.

Transport logic trees are developed for both fines and large RMI debris. Per NEI 04-07, 25% of small debris (fines) is ejected upward during blowdown transport. This debris is trapped and does not transport to the sump pool during

washdown. The transport logic trees for RMI debris are shown in Figures 3.e.4 and 3.e.5 above.

Coatings

Per NEI 04-07, Section 3.4.3.2, all qualified coatings within the ZOI are considered small fines. This size is also conservatively applied to unqualified coatings outside the ZOI. Therefore, 100% of coatings debris is modeled as transporting to the sump.

It is noted, however, that this is conservative, as unqualified coatings will most likely fail as chips that are less transportable than fines.

Westinghouse letter LTR-SEE-05-172 (Reference 3.e.2) documents tests that show 94% of the unqualified coatings fail as larger chips that will settle. Therefore, the 100% transport is highly conservative given that PNP has 17.4 cu ft of such coating constituting nearly 1000 ppm of debris in the sump. The basis for degraded and unqualified coating, in the previously performed strainer head loss testing for PNP, was 21.1 cu ft.

Latent Debris and Foreign Materials

Guidance pertaining to the transport of latent debris is provided in the NRC NEI 04-07 SE, Section 3.6.3, which states that all debris generated outside the ZOI is small fine debris that subsequently transports to the sump screens (the fraction transported to sump screen is 1.0). Guidance pertaining to miscellaneous debris types is provided in the NRC NEI 04-07 SE, Section 3.5.2.2.2. The guidance implies that all miscellaneous fines and particulate debris should be modeled with 100% transport to the sump screen.

In addition, specific guidance is provided regarding the transport of foreign materials such as labels and placards. The NRC NEI 04-07 SE suggests that these items be evaluated for transportability using detailed transport methodology. However, given the absence of specific transport data for these foreign materials, they are modeled with 100% transport to the sump screen. In the absence of specific analysis, the wetted sump screen area should be reduced by an area equivalent to 75% of the original single sided surface area of the foreign materials (accounts for 50% overlap) per the NRC NEI 04-07 SE, Section 3.5.2.2.2.

Refined Transport Analysis

The baseline analysis was applied as an input in sizing the new sump passive strainers. For the final "holistic" test methodology, including chemical effects testing, it is necessary to reduce conservatism. A CFD analysis is being performed by AREVA and ARL for use in configuring the test flume. The results of the CFD will also be used for

refined transport analysis based on sump flow patterns and velocities on the containment floor.

The debris quantities that reach the sump strainer assemblies will be included in the CFD analysis report and that type and amount of each type of debris will become a part of the strainer design bases. The original baseline analysis and debris quantities will become historic documents at that point.

The debris that reaches the vicinity of the sump strainer assemblies from the CFD analysis will be used to compute, based on test flume scaling factors, the amount of debris or surrogate debris material to be placed in the test flume during the final holistic strainer pressure drop and bypass testing.

Additional adjustments are also expected to be made to the chemical precipitate calculation to reduce presently employed excessive conservatisms. This will help to retain the ECCS design margin for the strainers. Since all chemical precipitates are assumed to transport at 100% to the strainers, no transport adjustments will be required for the precipitates.

By virtue of the basic design of the test, the test protocol for the final holistic design basis testing allows for near field settlement of all the debris tested. This would include chemical precipitates as well, should that occur.

NRC Request

- *Provide the technical basis for assumptions and methods used in the analysis that deviate from the approved guidance.*

ENO Response

The methods and assumptions applied in the original debris transport analysis conform to those of NEI 04-07. As discussed above, the refined transport analysis is to take credit for debris settlement in the sump water.

NRC Request

- *Identify any computational fluid dynamics codes used to compute debris transport fractions during recirculation and summarize the methodology, modeling assumptions, and results.*

ENO Response

The CFD analysis used for the refined transport analysis is in progress, and is scheduled to be done prior to initiation of testing. The methodology, assumptions, and results of the CFD are to be described in the final report of the combined debris and chemical effect testing.

NRC Request

- *Provide a summary of, and supporting basis for, any credit taken for debris interceptors.*

ENO Response

ENO is not taking credit for debris interceptors for PNP.

NRC Request

- *State whether fine debris was assumed to settle and provide basis for any settling credited.*

ENO Response

The original debris transport analysis does not assume settlement for fine debris. The refined transport analysis, which is in progress, takes credit for debris settlement.

NRC Request

- *Provide the calculated debris transport fractions and the total quantities of each type of debris transported to the strainers.*

ENO Response

The debris transport fractions of the original transport analysis are shown in Figures 3.e.1 through 3.e.5. The debris transport fractions of the refined transport analysis are to be included in the final report of the combined debris and chemical effect testing.

References

3.e.1. EA-MOD-2005-04-10, Head Loss Calculations Supporting Resolution of GSI-191, Rev.0, August 3, 2005

3.e.2 Westinghouse internal letter LTR-SEE-05-172, "Mass Distribution of Failed Coatings," proprietary, August 9, 2005

3.f. Head Loss and Vortexing

NRC Request

The objectives of the head loss and vortexing evaluations are to calculate head loss across the sump strainer and to evaluate the susceptibility of the strainer to vortex formation.

- *Provide a schematic diagram of the emergency core cooling system (ECCS) and containment spray systems (CSS).*

ENO Response

As references of the ECCS and CSS, piping and instrument diagrams (P&IDs) M-204-A and M-203-A are provided in Attachments 3 and 4 of this document. An overview of the PNP design of safeguards to a LOCA is included below.

Safety injection is automatically initiated upon receipt of a safety injection signal (SIS). The SIS starts the high pressure safety injection (HPSI) and low pressure safety injection (LPSI) pumps, opens the safety injection valves and closes the PCS check valve leakage paths. The rest of the system is always aligned for safety injection during power operation. The safety injection tanks (SITs) will discharge into the PCS when the pressure drops to approximately 240 psig. Motor-operated valve and system piping design are such that safety injection flow will be distributed approximately equally between the four PCS cold legs. No throttling of motor-operated valves or other operator action is required to distribute flow.

When the water in the safety injection and refueling water (SIRW) tank reaches a predetermined low level, the recirculation actuation signal (RAS) is initiated on coincident one-out-of-two (taken twice) low-level switch actuation. The RAS opens the containment sump valves, closes the SIRW tank valves, stops the LPSI pumps and closes the valves in the pump minimum flow lines provided that the control room operators have enabled the close permissive by placing the minimum flow valve hand switches to a closed position. The valves in the minimum flow recirculation lines have also been provided with an isolation contact and redundant position indication in the control room to meet single failure criterion. The stroke times on the containment sump and SIRW tank valves are set up to ensure an adequate overlapping stroke in order to provide a continuous supply to the engineering safeguards pumps during transfer of suction, and the close stroke times of the pump minimum flow line valves are set to isolate the containment sump from the SIRW tank. The LPSI pumps may be manually restarted to obtain increased cooling flow when the PCS pressure is reduced. One or more spray pumps can also be used to augment flow to the core after the pressure is reduced. In addition, in order to meet NPSH requirements, the RAS opens the HPSI subcooling valve CV-3071 if the associated HPSI pump is running. After the containment sump valve CV-3030 opens from RAS, HPSI subcooling valve CV-3070 will open if the associated

HPSI pump is running. Also, RAS will close containment spray valve CV-3001, if the containment sump valve CV-3030 does not open. During the first 5-1/2 to 6-1/2 hours after the LOCA, the hot-leg injection lines are isolated from the PCS. Hot-leg injection is initiated by operator action to realign two valves in each HPSI train for simultaneous hot- and cold-leg injection. There are two HPSI pumps, each capable of supplying sufficient injection water. Normally, one HPSI pump is aligned to the HPSI train 1 header and the second HPSI pump is aligned to the HPSI train 2 header.

During simultaneous hot-leg and cold-leg injection, the operating HPSI pump(s) continue to be supplied by containment spray pump discharge via the subcooling line(s). The HPSI pumps discharge approximately 50% of the flow to the hot-leg drain nozzle in hot leg 1, and the remainder to the four injection nozzles in the cold legs. One branch run from HPSI train 1 joins a branch run from HPSI train 2 into one line that connects to the hot-leg drain line. To prevent HPSI pump runout, cold-leg injection flow is diverted through restricting orifices and hot-leg injection flow is throttled by preset valve limit switches. To ensure the system is not misaligned by operator actions, interlocks exist between valve operators to prevent opening of hot-leg injection valves until the restricting orifice bypass valves are closed.

NRC Request

- *Provide the basis for the strainer design maximum head loss.*

ENO Response

The sump strainer head loss is comprised of clean head loss, and debris head loss. The clean strainer head loss calculation uses the results of clean strainer head loss hydraulic testing previously conducted at the Fairbanks Morse Pump Company. The calculation also used test results from the Electric Power Research Institute's (EPRI) Charlotte, NC NDE Center tests for PCI Prototypes I and II. This testing is applicable to the current PCI Sure-Flow ® Strainer. The methodology of the clean head loss is described in detail in the PCI proprietary document Suction Flow ®Control Device (SFCD) Principles and Head Loss Technical Document No. SFSS-TD-2007-005, Revision 0, dated June 12, 2007, which has been submitted to the NRC. The clean strainer head loss depends on the specific plant conditions. The head loss calculation based on the PCI prototypes was adjusted for PNP parameters, including uncertainty, and adjustment for kinematic viscosity for temperatures at 255°F, 212°F and 120°F.

The existing basis of the debris head loss is established on the testing results using bounding case of the LOCA-generated containment debris. PNP design basis debris concentration for purposes of passive strainer assembly performance and sizing applied the bounding LOCA-generated containment debris mix from Point Beach Nuclear Plant (PBNP). Use of the PBNP debris generation permits the use of the PBNP specific strainer performance testing in-lieu of performing a PNP-specific passive

strainer assembly performance test. A comparison of the PNP and PBNP design basis specification LOCA generated debris allocations was performed. It was concluded that the PNP design basis is bounded by the PBNP debris and bypass tests performed at ARL. The generic test methodology is described in the PCI proprietary document Sure-Flow ® Suction Strainer – Testing Debris Preparation & Surrogates Technical Document No. SFSS-TD-2007-004, Revision DRAFT-10, November 1, 2007, which was submitted to the NRC. Near field effect was not credited in the test. Chemical precipitation was not included in the testing scope. However, a postulated head loss due to potential chemical effects was included in the NPSH margin analysis (Reference 3.f.1). The head loss due to the potential chemical effects is to be tested in the combined debris and chemical precipitation testing, which is scheduled for spring 2008.

The head loss in the ECCS suction piping increases as the sump fluid cools and the fluid viscosity increases during the recirculation operation. The most critical head loss of the strainer system occurs during the early phase of the recirculation mode, when the available NPSH for the CSS pumps is most limiting. The PNP analysis does not credit the containment over pressure in the NPSH determination. The strainer NPSH analysis accounts for the vapor pressure of the subcooled fluid. As the sump fluid continues to be cooled, and the head loss increases, the vapor pressure of the sump fluid also increases. The gain on the suction head overrides the head loss increase due to fluid viscosity change. This results in a net gain of NPSH margin. The most limiting head loss across the sump strainer occurs at a sump temperature of 212°F, and is calculated to be 2.86 feet of water with an ECCS system flow rate of 3491 gallons per minute (gpm). This head loss value includes a postulated chemical effect of one foot of water.

NRC Request

- *Address the ability of the screen to resist the formation of a "thin bed" or to accommodate partial thin bed formation.*

ENO Response

Thin bed phenomenon is not a concern for the engineered strainer assemblies installed at PNP which have a complex surface design. The combination of the Sure-Flow ® Suction strainer design, the low flow approaching velocity and the characteristics of the debris mix preclude forming of the thin bed. The ability of the screen to resist the formation of a thin bed will be demonstrated by the prototypical strainer testing scheduled for spring 2008.

NRC Request

- *Provide a summary of the methodology, assumptions and results of the vortexing evaluation*

ENO Response

The strainer design features of protection from vortex and air ingestion potentials are described in PCI proprietary document Sure-Flow ® Suction Strainer - Vortex Issues Technical Document No. SFSS-TD-2007-003, Revision 0, June 8, 2007, which has been submitted to the NRC. In a plant specific analysis, PCI demonstrated the strainer assembly design capability to prevent vortexing, air ingestion and air fraction of PNP configurations. The PCI analysis was based on a minimum containment flood height elevation of 593'6" resulting in an available strainer submergence of 0.323 ft. Whereas, the predicted minimum containment flood for a large break LOCA case is 593'9.5."

PCI concluded that the configuration of the PNP Sure-Flow ® Suction strainer will prevent the formation of vortex development. The close spacing of various strainer components, and the small hole size of the perforated plate, meets and/or exceeds the guidance found in Table 6 of Regulatory Guide (RG) 1.82, "Water Sources for Long-Term Recirculation Cooling Following a Loss-of-Coolant Accident." The PNP strainer does not meet the 6-inch submergence requirement postulated in RG 1.82. However, there is a submergence level of approximately 11-7/16" to the top of the core tube. Thus, the water flow would have to pass through approximately 12" of combined perforated plate, wire stiffener, and cross-bracing which would further preclude the formation of a vortex. The NRC carried out a number of tests regarding vortex suppression at ARL to arrive at the information summarized in Table A-6 of RG 1.82. The PCI Sure-Flow ® suction strainer prototype for PNP was also tested at ARL under various conditions. During testing of the PNP prototype strainers, even when partially uncovered, did not exhibit any characteristics associated with vortex or vortex development. Accordingly, with the lack of an air entrainment mechanism (i.e., vortex formation) and low Froude number of the PNP strainer configuration, air ingestion will not to occur.

PCI evaluated the issue of void fraction for PNP by two different methodologies. The first methodology employs the use of classical hydraulic fluid flow calculation to determine the void fraction. The second methodology uses the NRC NUREG/CR-6224 correlation to determine void fraction for PNP. NUREG/CR-6224 correlation indicates that a void fraction of 0.0% will occur at the strainer. The classical flow calculation indicates that a void fraction greater than 0% will occur at the strainer. However, the classical flow calculation also concluded that the void would have collapsed by the time the water leaves the strainer assembly and discharge piping.

NRC Request

- *State whether the sump is partially submerged or vented (i.e., lacks a complete water seal over its entire surface) for any accident scenarios and describe what failure criteria in addition to loss of net positive suction head (NPSH) margin were applied to address potential inability to pass the required flow through the strainer.*

ENO Response

PNP has a vented containment sump (depicted below) with two 4-inch vent lines open above the containment minimum flood level (approximately 1.5 feet above minimum flood level). An analysis was performed to demonstrate that a vented containment sump envelope does not adversely affect the ECCS or CSS pump performance.

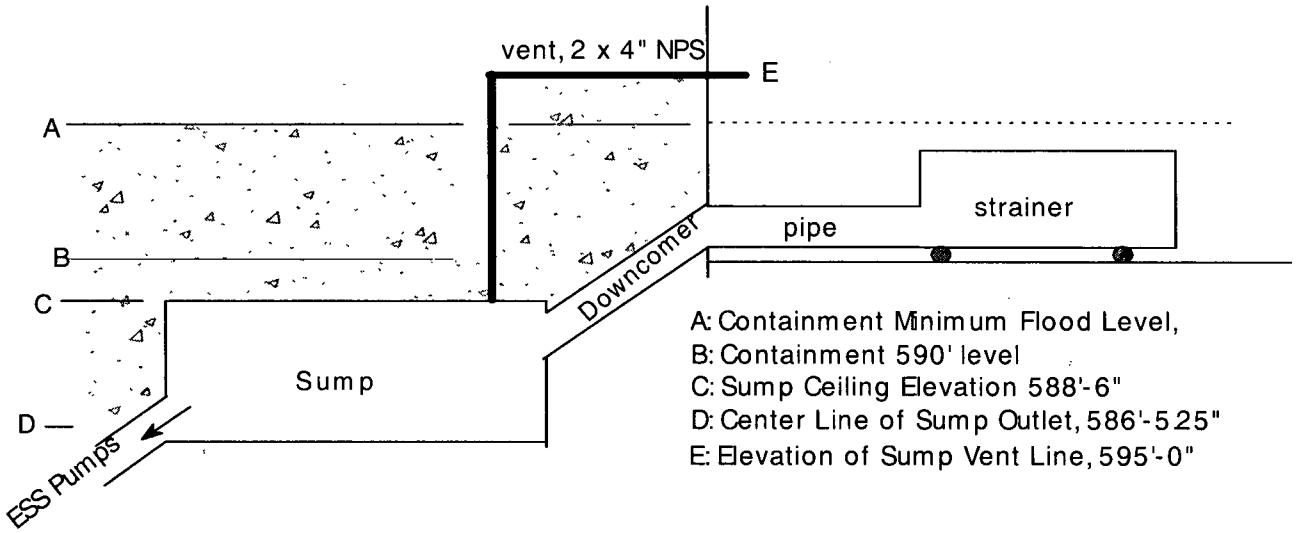

To ensure that the open sump does not create a potential for vortexing or air ingestion, the sump hydraulic gradient was evaluated using the acceptance criteria stated in RG 1.82, Table A-1. For a zero air ingestion condition, a Froude number of less than 0.25 is required. Using that Froude number, the minimum submergence required for 0% air ingestion is 3.47 ft above the centerline of the suction pipe (589.91 ft. elevation) which is above the sump ceiling elevation of 588.50 ft., and is within the filled vent pipe column. Therefore, the minimum submergence requirement is at the 588.50 ft. elevation.

NRC Request

Describe significant margins and conservatisms used in the head loss and vortexing calculations

ENO Response

The major conservatisms in the head loss and vortexing calculations include the application of bounding case debris loading in the strainer head loss analysis and the application of the containment minimum flood level in assessing the vortexing potential. The conservatisms in determining the containment minimum flood level are described in section 3.g of this document. The calculated margin for the strainer head loss is 0.95 foot water column which includes an assumed 1 foot head loss for chemical effects. The margin of the flood level relative to the potential for air ingestion is 1.51 foot.

NRC Request

- *Provide the minimum submergence of the strainer under small-break loss-of-coolant accident (SBLOCA) and large-break loss-of-coolant accident (LBLOCA) conditions.*

ENO Response

The minimum submergence of the strainer under LBLOCA condition is predicted to be 3-7/8 inches. For a small break LOCA, the RAS could occur before PCS pressure drops to the SIT actuation pressure. As a result, the SIT inventory would not be available to the sump for a SBLOCA. For a four inch SBLOCA with a single failure of left channel ECCS redundant system, the minimum sump level is predicted to be at 593.24 foot or 3.24 feet above the containment base slab. The minimum submergence of the strainer is 0.75 inch.

NRC Request

- *Provide a summary of the methodology, assumptions, and results of prototypical head loss testing for the strainer, including chemical effects. Provide bases for key assumptions.*

ENO Response

The prototypical head loss test for the PNP site specific strainers, including both site specific debris loading and site specific chemical effects, is currently scheduled for spring of 2008. The testing will be controlled by a PNP site specific test plan. The test plan will incorporate the then current version of the PCI generic test protocol to the

extent it is applicable to Palisades. The generic test protocol is continuously updated to reflect the NRC's input and the testing experience gained in testing other licensee's strainers in the ARL full size strainer element test flume.

The intention is to maximize the quality of the test and minimize potential reservations regarding the test results by assuring the testing is defendable as prototypical or conservative for PNP. The test plan and PCI generic test protocol used in the testing will be included in either in the final test report or an associated document. Once the testing is done, the above NRC requested information will be incorporated in a follow-up to this supplemental response.

NRC Request

- *Address the ability of the design to accommodate the maximum volume of debris that is predicted to arrive at the screen.*

ENO Response

As presented in Section 3.b, the strainer design was sized to the bounding case of the debris generation.

NRC Request

- *Provide a summary of the methodology, assumptions, bases for the assumptions, and results for the clean strainer head loss calculation.*

ENO Response

The clean strainer head loss calculation uses the results of clean strainer head loss hydraulic testing previously conducted at the Fairbanks Morse Pump Company, and at the Electric Power Research Institute (EPRI) Charlotte, North Carolina, Non-Destructive Examination Center for PCI Prototypes I and II, respectively. The testing is applicable to the current PCI Sure-Flow ® Strainer. The methodology of the clean head loss is described in detail in the PCI proprietary document, "Suction Flow ® Control Device (SFCD) Principles and Head Loss," SFSS-TD-2007-005, Revision 0, June 12, 2007, which has been submitted to the NRC.

NRC Request

- *Provide a summary of the methodology, assumptions, bases for the assumptions, and results for the debris head loss analysis.*

ENO Response

The existing basis of the debris head loss is established on the testing results using bounding case of the LOCA-generated containment debris. PNP design basis debris concentration, for purposes of passive strainer assembly performance and sizing, applied the bounding LOCA generated containment debris mix from PBNP. Use of the PBNP debris generation permits the use of the PBNP-specific strainer performance testing in-lieu of performing a PNP-specific passive strainer assembly performance test. The comparison of the PNP and PBNP design basis specification LOCA-generated debris allocations was performed. It was concluded that the PNP design basis is bounded by the PBNP debris and bypass tests performed at the ARL.

NRC Request

- *State whether near-field settling was credited for the head-loss testing and, if so, provide a description of the scaling analysis used to justify near-field credit.*

ENO Response

The near-field settling was not credited in the head loss testing performed using the PBNP debris mix, as it is the bounding case for PNP debris mix. The near-field settling is allowed in the planned combined debris and chemical precipitation testing. The scaling analysis used to justify near-field effects will be provided following completion of the combined debris and chemical precipitation testing.

NRC Request

- *State whether temperature/viscosity was used to scale the results of the head loss tests to actual plant conditions. If scaling was used, provide the basis for concluding that boreholes or other differential-pressure induced effects did not affect the morphology of the test debris bed.*

ENO Response

Temperature/viscosity scaling was used in the determination of the head loss using the PBNP debris mix, and is to be used in correlating the test results of the combined debris and chemical precipitation head loss testing which is scheduled in the second quarter of 2008. The potential for bore holes or other differential pressure-induced effects will be closely monitored during the test. Any erratic pressure variations could be indicative of the presence of bore holes and will be evaluated.

NRC Request

- *State whether containment accident pressure was credited in evaluating whether flashing would occur across the strainer surface, and if so, summarize the methodology used to determine the available containment pressure.*

ENO Response

Containment accident pressure was not credited in evaluating whether the flashing would occur across the strainer surface.

References

3.f.1. EA-EC496-11, "Containment Sump Passive Strainer Assembly Design Margin Assessment," Rev. 0, February 12, 2007

3.f.2 Los Alamos report LA-UR-04-1227, "GSI-191: Experimental Studies of Loss-of-Coolant-Accident-Generated Debris Accumulation and Head Loss with Emphasis on the Effects of Calcium Silicate Insulation"

3.f.3 WCAP-16530-NP and Spreadsheet, "Evaluation of Post Accident Chemical Effects in Containment Sump Fluids to Support GSI-191," February 2006

3.g. Net Positive Suction Head (NPSH)

NRC Request

The objective of the NPSH section is to calculate the NPSH margin for the ECCS and CSS pumps that would exist during a loss-of-coolant accident (LOCA) considering a spectrum of break sizes.

ENO Response

In order to reduce the post-LOCA hydraulic demand and establish adequate NPSH margin when the passive strainers are aligned to the containment sump, ENO replaced the open/closed style CSS containment isolation spray valves (CV-3001/CV-3002), air operators (VOP-3001/VOP-3002), solenoid valves (SV-3001/SV-3002), valve position switches (POS-3001/POS-3002) and air pressure regulators (PCV-3001/PCV-3002) with CCI DRAG style replacement valves, actuators and accessories. These modifications provide the capability for the valves to be placed in the OPEN/CLOSED or fixed THROTTLED position.

Under a post LBLOCA, the CSS isolation valves (CV-3001, CV-3002) will automatically reposition themselves from fully open to a fixed throttled position on receipt of a RAS signal. The valves will remain in this position for the duration that CSS is required, or until termination of CSS flow through their associated CSS spray header. The throttle position was set to maintain a minimum differential pressure of approximately16 psi across the most remote spray nozzle on the spray headers. This differential pressure was set for the maximum throttling of the containment spray flow while maintaining a predictable spray performance.

The most limiting design condition for the strainer assemblies is the LBLOCA case with one of the CSS pumps isolated, concurrent with one of the CCW heat exchangers out of service. This case, designated as Case 2ACM in the hydraulic design analysis, has the lowest NPSH margin and nearly the highest system flow under post-LBLOCA recirculation mode of operation. In this scenario, CSS pumps P-54A and P-54C supply HPSI pumps P-66A and P66B, two throttled CSS headers, and four cold legs. The NPSH margin of the ECCS pumps under this system alignment is calculated as 0.95 foot of water, which includes the debris head loss of 1.86 feet due to debris, and a postulated head loss of one-foot due to chemical effects. The system flow rate of this alignment is 3489 gpm (3491 gpm was used in the strainer head loss evaluation, noted in section 3.f. above, due to truncation of the flow rate). This NPSH margin value was derived from the conservative approaches, as discussed below.

Reference 3.g.1 determined the minimum sump water level for various LOCA scenarios. The assumptions applied in determining the water level include the following:

- The maximum residual SIRW tank level after RAS is the minimum suction switch over set point including instrument error.

- The water vapor inside containment after LOCA is at saturated conditions for the containment atmosphere. The initial liquid and vapor inventories inside containment are neglected.

- The vapor inventory, spray header filling volume, and the spray drop inventory in the containment atmosphere are all accounted. Holdup volume in the containment includes the volumes on the floor due to curbing, inside cubicles, in the tilt pit of the refueling cavity and in the reactor cavity. The water held on the vertical surface is not included due to its relatively negligible quantity. The water held up in the reactor cavity is to flood the cavity to the mid-loop elevation (plant elevation 618'-2.5"). This holdup volume is in accordance with the cavity flooding design. The purpose of the flooding operation is to cool the reactor vessel during severe accidents that may progress to core melting. During these events, insufficient or no core cooling flow is available to remove the core decay heat. These accidents are beyond the scope of the events included in Chapter 14 of the FSAR. As a result, no credit is taken for the flooding system to mitigate the events described in the FSAR.

- The water inventories of the SIRW tank and SITs are based on the minimum volumes required by Technical Specifications (TS). It is noted that 250,000 gallons minimum SIRW tank inventory is required by TS for plant modes 1, 2 and 3. The administrative limit on SIRW tank minimum level is 275,970 gallons (at 92% level) for plant modes 1, 2 and 3. This administrative limit is a NRC commitment per NRC Bulletin 2003-01, and the volume is ensured daily, as required by the PNP TS Surveillance Procedure DWO-1. The SIRW tank water level is typically maintained at 95% level to meet the 92% requirement.

- The containment flood level is calculated based on a correlation of volume displacement and the sump water volume. The volume displacement includes the volumes of equipment, concrete structures, pipes and steel supports. The assessment of the volumes of the pipes, supports, and the small equipment under the flood level were supported by the field measurements.

The resultant containment minimum water level under the 2ACM case is predicted to occur at 8549 seconds after the LOCA event with the primary parameters listed below.

Table 3.g.1 Primary Parameters for Sump Pool Level

Initial coolant inventory	2,554,384 lbm
Primary coolant system	
Temperature	240.8°F
Liquid volume	3465.9 ft^3
Liquid density	59.06 lbm/ft^3
Vapor volume	7476.6 ft^3
Vapor density	0.06209 lbm/ft^3
Liquid and vapor mass	205,158 lbm
Containment atmosphere	
temperature	188.2 °F
Total volume	1.64×10^6 ft^3
Liquid fraction	0.02265 ft^3/ft^3
Vapor density	0.02355 lbm/ft^3
Vapor mass	37,744 lbm
Containment holdup	
temperature	212.0 °F
Liquid volume	7799 ft^3
Liquid density	59.812 lbm/ft^3
Liquid mass	466,474 lbm
Containment spray header and spray drop inventory	
Liquid mass	13,125 lbm
Containment sump liquid mass	
temperature	212.0 °F
Liquid mass	1,831,883 lbm
Liquid density	59.812 lbm/ft^3
Liquid volume	30,629 ft^3
Containment water level	3.82 ft

In determining the system flow rate, the following assumptions were applied:

- The ECCS pumps curves accounts for a 59.5 to 61.2 hertz (Hz) variation in emergency diesel generator (EDG) frequency. The required NPSH by the pump manufacturer at 60 Hz frequency was adjusted due to the EDG frequencies and the consequent higher pump speed changes based on the pump similarity law.

- The pump curves applied in the design analysis also include a 7% allowance for flow degradation in the CSS pumps, an 8% allowance for flow degradation in the HPSI pumps.

- Containment sump temperature is 212 degrees F.

For a small break LOCA, the RAS could occur before primary coolant system pressure drops to the SIT actuation pressure. As a result, the SIT inventory would not be available to the sump for a SBLOCA. For a four-inch SBLOCA with a single failure of left channel ECCS redundant system, the minimum sump level is predicted to be at 593.24 foot elevation, or 3.24 feet above the containment base slab. This water level is less than those of the LBLOCA, cases, but would keep the strainer fully submerged. With a higher PCS pressure, the system flow rate and the head loss in the SBLOCA case is less than those of the LBLOCA cases. Also, the SBLOCA-generated debris is to be substantially less than the debris generated due to a LBLOCA since the ZOI would be only a fraction of the ZOI of the design basis case. Therefore, with respect to the sump strainer design, the SBLOCA conditions are bounded by the LBLOCA conditions.

It is noted that the passive strainer system is not debris tested using the maximum flow conditions associated with a LPSI pump failure to stop at RAS. Under the scenario, one of the LPSI pumps fails to trip at RAS. As a consequence, the sump strainer is subject to an estimated total ECCS flow of 8671 gpm, which is the combined output of one LPSI pump, three CSS pumps, and two HPSI pumps. For this scenario, non-degraded pump curves at a nominal 60 Hz frequency were used in the flow analysis.

To mitigate the LPSI pump fail to trip condition, operator action would be required. Per Emergency Operating Procedure (EOP) Supplement 42 (Reference 3.g.3), the first post-RAS action is to ensure both LPSI pumps are tripped. Tripping a LPSI pump is a simple matter of taking the hand switch on the control panel to trip. If the hand switch on the control panel would not trip the pump, operators would dispatch an auxiliary operator (AO) to trip the pump locally at the breaker. LPSI pump breaker numbers are on the LPSI pump hand switch labels. The AOs are recalled to the control room during a LOCA event and they would remain in the control room until the emergency Operations Support Center is activated. Therefore, the AOs would be immediately available to locally trip the affected LPSI pump breaker, in the switchgear room immediately below the control room. However, a single credible active failure, of the LPSI pump breaker to trip, due to breaker contact fusion, or breaker mechanical trip linkage failure would prevent the LPSI pump from being tripped both in the control room, via its associated hand switches on the C03L/R panels, or locally at the breaker. In this case, the operating LPSI pump would be stopped by de-energizing the appropriate electrical bus.

In assessing the head loss at the subject high flow condition, the loss due to debris bed on the strainer surfaces is included. Due to the short time period that the LPSI pump will be operating, for this analysis, the amount of debris assumed to be on the strainer is reduced from the maximum value. Since the event pertains to the beginning phase of recirculation operation, and the sump water is at saturation temperature, there is little concern about chemical precipitation in the sump pool. The CSS pumps and HPSI pumps are shown to maintain adequate NPSH margin. Without taking credit for the

containment accident pressure, the operating LPSI pump will not have adequate NPSH margin. However, post recirculation LPSI pump operation is not credited.

An ongoing hydraulic analysis is evaluating the high flow effects on air ingestion. CFD analysis, and the combined debris and chemical precipitate head loss testing will be used, if necessary, to achieve acceptable results. The acceptable air ingestion results will be provided in the follow-up supplemental response.

NRC Request

- *Provide applicable pump flow rates, the total recirculation sump flow rate, sump temperature(s), and minimum containment water level.*

ENO Response

For the strainer design limiting condition of the aforementioned 2ACM case, the predicted flow rates for the CSS pumps are 1798 gpm and 1691 gpm for P-54A and P-54C, respectively. The flow rates for the HPSI pumps are 756 gpm and 744 gpm for P-66A and P-66B, respectively. The total recirculation sump flow rate is 3489 gpm with this system alignment. The sump temperature for the limiting condition is 212°F. The predicted minimum containment water level is 3.82 feet above the containment base slab.

NRC Request

- *Describe the assumptions used in the calculations for the above parameters and the sources/bases of the assumptions.*

ENO Response

Conservative assumptions listed in the previous pages were applied in calculating the pump flow rates and containment water level. The assumptions were based on the deterministic approach in calculating the NPSH margins for the ECCS pumps.

NRC Request

- *Provide the basis for the required NPSH values, e.g., three percent head drop or other criterion.*

ENO Response

The required NPSH for the pumps is based on the vendor certified pump performance data. The certification was in accordance with the test standards set forth by the Hydraulic Institute, whereas, the NPSH available is based on conservative assumptions of the minimum sump flood level and a containment pressure of 0 psig.

NRC Request

- *Describe how friction and other flow losses are accounted for.*

ENO Response

Flow losses are accounted for in calculating the minimum NPSH margin. The head loss through the debris bed, the strainer surface, the strainer core tubes, the associated piping between the strainer and the sump, the exit loss from the downcomer pipe to the sump are all combined with the head loss through the suction pipes of the ECCS pumps.

NRC Request

- *Describe the system response scenarios for LBLOCA and SBLOCAs.*

ENO Response

A description of the system response to LOCA scenarios is included in Section 3.f. of this document.

NRC Request

- *Describe the operational status for each ECCS and CSS pump before and after the initiation of recirculation.*

ENO Response

Before the RAS, the CSS, HPSI and LPSI pumps are all in operation. The LPSI pumps are stopped automatically at RAS. After RAS, the CSS pumps supply the two HPSI pumps and the two containment spray headers.

NRC Request

- *Describe the single failure assumptions relevant to pump operation and sump performance.*

ENO Response

The most limiting design condition for the strainer assemblies is the LBLOCA case with one of the CSS pumps isolated, concurrent with one of the CCW heat exchangers out of service. This case, designated as Case 2ACM in the hydraulic design analysis, has the lowest NPSH margin and nearly the highest system flow under post LBLOCA recirculation mode of operation.

NRC Request

- *Describe how the containment sump water level is determined.*

ENO Response

The containment sump water level was determined based on a correlation of water volume and the physical space in the containment. The correlation was developed analytically in Reference 3.g.4.

NRC Request

- *Provide assumptions that are included in the analysis to ensure a minimum (conservative) water level is used in determining NPSH margin.*

ENO Response

The significant assumptions associated with the minimum water level analysis are presented earlier in this section.

NRC Request

- *Describe whether and how the following volumes have been accounted for in pool level calculations: empty spray pipe, water droplets, condensation and holdup on horizontal and vertical surfaces. If any are not accounted for, explain why.*

ENO Response

The volumes of empty spray pipe, water droplets, condensation and holdup on containment floors have been accounted in the determination of containment minimum water level. The holdup volume on the vertical surfaces in the containment is not accounted in the pool level calculation. The holdup volume on the vertical surfaces is deemed to be relatively insignificant and is well bounded by the conservatism in calculation of the pool water level.

NRC Request

- *Provide assumptions (and their bases) as to what equipment will displace water resulting in higher pool level.*

ENO Response

The volume displacement for pool level calculation includes the following major equipment: reactor vessel, reactor vessel insulation, bioshield and the access tube, clean waste receiver tanks, pressurizer heater transformers. The volume displacement equation includes a 200 cubic foot volume for the containment buffer agent which is expected to be dissolved in water. This volume represents a less than 0.5% deviation of the total sump pool volume and is negligible. The volume displacement equation also includes the volumes of miscellaneous equipment such as pipe, steel supports, etc. The miscellaneous equipment volume applied in the calculation was confirmed by walkdown survey.

NRC Request

- *Provide assumptions (and their bases) as to what water sources provide pool volume and how much volume is from each source.*

ENO Response

The pool water volume and the sources are provided above. The predicted pool volume was based on conservative assumptions that yield the minimum pool level.

NRC Request

- *If credit is taken for containment accident pressure in determining available NPSH, provide description of the calculation of containment accident pressure used in determining the available NPSH.*

ENO Response

The NPSH calculation does not take credit for containment accident pressure.

NRC Request

- *Provide assumptions made which minimize the containment accident pressure and maximize the sump water temperature.*

ENO Response

The NPSH margin calculation considered the condition of 0 psig containment pressure and the maximum sump temperature at saturation of 212 °F.

NRC Request

- *Specify whether the containment accident pressure is set at the vapor pressure corresponding to the sump liquid temperature.*

ENO Response

The containment accident pressure was not credited in the NPSH calculation. The saturation vapor pressure of the sump fluid is set at 0 psig containment pressure. A temperature-dependent NPSH evaluation was performed to assess the design limiting condition for the strainer head loss. A summary of the representative time dependent NPSH values is tabulated below.

Table 3.g.2 Representative Time Dependent NPSH available

Time after LOCA, hours	Sump Temperature, °F	Vapor Pressure, psia	NPSH available, ft
2.8	211.5	14.56	16.3
4.2	204.5	12.69	20.7
6.1	192.8	9.96	27.2
10.0	177.0	7.05	34.2
24.2	158.5	4.59	39.8
48.1	149.9	3.71	41.7
69	145.0	3.30	42.6
72	152.0	3.92	41.3
244	144.5	3.26	42.7

NRC Request

- *Provide the NPSH margin results for pumps taking suction from the sump in recirculation mode.*

ENO Response

The design limiting condition for the strainer is a CSS pump NPSH margin of 0.95 foot of water which includes the debris head loss of 1.86 feet due to debris and a postulated head loss of 1-foot due to chemical effects. The NPSH margin will be reanalyzed based on the test results of the combined debris and chemical precipitation head loss testing which is scheduled in the second quarter of 2008.

References

3.g.1 EA-SDW-97-03, "Minimum Post LOCA Containment Water Level Determination," Revision 2, October 12, 2006

3.g.2 EA-MOD-2005-04-03, "ESS Flow Rates & Pump NPSH during Recirculation Mode with CSS Throttling," Revision 2, July 31, 2005

3.g.3 EOP Supplement 42, "Pre and Post RAS Actions," Revision 7

3.g.4 EA-C-PAL-94-0016A-01, "Containment Flood Analysis," Revision 1, December 4, 1994

3.h. Coatings Evaluation

NRC Request

The objective of the coatings evaluation section is to determine the plant-specific ZOI and debris characteristics for coatings for use in determining the eventual contribution of coatings to overall head loss at the sump screen.

- *Describe and provide bases for coatings debris generation assumptions. For example, describe how the quantity of paint debris was determined based on ZOI size for qualified and unqualified coatings.*

ENO Response

Coatings may be dislodged during a LOCA and then transported to the drainage system for the sump. Coatings are classified as qualified or unqualified. Qualified coatings are defined as coatings that will remain in place under Design Basis Accident (DBA) conditions (temperature, radiation, humidity, and pressure). These coatings, if in good condition, will become debris only in the ZOI. All unqualified coatings and damaged qualified coatings become debris during a LOCA, even when outside the ZOI.

Qualified coatings turn to debris within a ZOI radius of 10 D. The sources of information of the coatings inside containment come from the walkdowns performed for GL 98-04, the early walkdowns performed for GSI-191, walkdown to define containment heat sink characteristics used in the containment LOCA response analysis, and the PNP painting schedule (Reference 3.h.1) generated during the initial construction period.

The S1, S2 and S3 breaks (Figure 1) all have ZOIs that are extremely large in comparison to the vault (35 ft. for S1 and S2, 25 ft. for S3). For this reason, these breaks will conservatively hit all of the qualified coatings identified in the vault where they are located. The vaults as used here are not literally vaults, but are the semi-enclosed area in which each of the two steam generators reside. They are open to a common plenum at the loop piping elevation from elevation 608'-6" to approximately elevation 620'. There are numerous cutouts in the "vaults" at the elevation of the primary coolant system loops.

Qualified coatings within the ZOI radius for break S4 are calculated based on the ratio of 11.19"/42" of the qualified coating within vault 1 calculated for the S1 break.

NRC Request

- Provide *a summary of type(s) of coating systems used in containment, e.g., Carboline CZ 11 Inorganic Zinc primer, Ameron 90 epoxy finish coat.*

ENO Response

The coating systems used in containment at PNP are classified as qualified (acceptable) and unqualified. A qualified coating in the PNP safety-related coatings program is one that has been determined to have reasonable assurance to not detach under normal or accident conditions. The qualified coatings in the PNP containment include the following:

- Carboline Phenoline 305 phenolic modified epoxy (not top coated) on concrete
- Carboline Phenoline 300 phenolic modified epoxy primer-sealer with Carboline Phenoline 300 phenolic modified epoxy finish coat on concrete
- Carboline Carbo Zinc 11 primer with Carboline Inorganic 3912 finish coat on carbon steel
- Carboline Carbo Zinc 11 primer with Carboline Phenoline 305 phenolic modified epoxy on carbon steel
- Carboline Carbo Zinc 11 (not top coated) on carbon steel

Coating systems in the PNP containment that are not considered qualified include alkyd, epoxy, aluminum and inorganic zinc.

NRC Request

- *Discuss suction strainer head loss testing performed as it relates to both qualified and unqualified coatings and what surrogate material was used to simulate coatings debris.*
- *Provide bases for the choice of surrogates.*
- *Describe what debris characteristics were assumed, i.e., chips, particulate, size distribution and provide bases for the assumptions.*

ENO Response

The head loss testing performed assumed 100% post-LOCA paint debris is transported to the sump. As mentioned in Section 3.f of this document, the test was performed using the bounding LOCA-generated debris of PBNP. The coating debris included in the head loss testing was assigned to two categories, the inorganic zinc coating (IOZ) and epoxy. The test material of coatings, including the surrogate material, is described in the PCI report (Reference 3.h.3) which has been submitted to NRC. The following criteria associated with preparation of the test material are excerpted from the PCI report.

a. Particles of "like" size, shape and density are expected to perform in the same way as other particles of "like" size, shape and density.
b. Particles of similar size that are less dense will suspend more easily, and when added to the debris mix at the postulated mass of the actual coating material is bounding and conservative for those tests. In other words, less dense particles introduced at the same weight will occupy more of the interstitial space between fibers.
c. Particles of smaller sizes will bound particles of larger sizes. This is because smaller particles can fill more of the interstitial spaces between fibers than will larger particles; which will increase head loss on a relative scale.
d. During tests performed by EPRI, coatings were found to fail in the 5 to 650 micron size (83 micron average) for EPRI Test 1 and fail in the 5 to 1,025 micron size (301 micron average) for EPRI Test 2. [EPRI, *Analysis of Pressurized Water Reactor Unqualified Original Equipment Manufacturer Coatings*, Report 1009750, March 31, 2005]. Therefore, particulates used in head loss tests that are <83 microns are considered conservative and bounding for strainer head loss qualification testing.
e. Coatings in the form of powder when combined with a fibrous debris bed are assumed to bound coatings in the form of coating chips. In the absence of a fibrous debris bed, coating chips were also tested to bound the other end of the spectrum (i.e., coating particulate versus coating chips). The assumption is that coating chips in the absence of a fibrous debris bed can cover or block the perforated plate holes of the strainer. It is also assumed that for coating chips to be capable of blocking the perforated plate holes there must be sufficient screen velocity to "hold" the coating chips to the perforated plate and the coating chips must be greater than the perforated plate hole size diameter.
f. Inorganic zinc (IOZ) coating primers (top-coated or not) always fail as a powder-like material, and not as chips. Accordingly, IOZ coatings are assumed to fail as particulates.

    - The surrogate material for IOZ is tin powder with a particle size range of ~10 to 44 microns. (Note: Zinc has a specific density of 7.133 (445.3 lb/ft^3) and tin has a specific density of 7.29 (455.1 lb/ft^3)). The surrogate tin powder is purchased as Catalog No. SN-102; Tin (metal powder), passing through a < 325 mesh, and 99.9% pure.
    - Comanche Peak Steam Electric Steam (CPSES) provided Keeler & Long Report 06-0413 states that IOZ particle size is always greater than ten microns.
    - CPSES indicated that Carboline has stated that for their IOZ coatings, the initial zinc material component is greater than five microns per ASTM B330.
    - NEI 04-07 states that IOZ failure is 10 microns minimum size even in the zone of influence (ZOI).
g. PCI has conservatively assumed that epoxy, enamel, alkyd, acrylic, and other miscellaneous coatings always fail as a powder-like material, and not as chips,

unless specified by the client and/or supported by specific testing to prove otherwise. For the subject coatings with densities above 75 lb/ft^3, the use of crushed and ground #325 walnut shell flour (or stone flour, or other similar surrogates – density, size, shape, texture, etc.) is considered bounding and conservative.

- Walnut shells have a specific gravity of 1.2 to 1.5, which results in a density range of 74.9 to 93.6 lb/ft^3. PCI has documentation and lot specific testing, that confirms walnut shell specific gravity of less than 1.5.
- The average size distribution of the #325 walnut shell flour has been tested and found to be an average of 41 microns. When screened through a 325 mesh, 75% of the walnut shell flour particles will pass through a 44 micron screen.
- All of the subject coatings specified by PCI clients have a density range above 74.9 lb/ft^3 but less than 110 lb/ft^3. Therefore, walnut shell flour (or stone flour, or other similar surrogates – density, size, shape, texture, etc.) can be considered to be qualified for use as the subject coatings surrogate in the form of powder. The only exception is for inorganic zinc (IOZ) coatings which has a higher density that is similar to tin powder, rather than the walnut shell flour.
- Coating chips will be manufactured from dried Carboline CarboGuard 890/891 epoxy coating, or similar type coatings. These specific epoxy coatings have a dry density of approximately 94 lb/ft^3. This coating chip density bounds the alkyd and enamel coatings, both of which have higher dry densities of 98 lb/ft^3 and 105 lb/ft^3, respectively. Note: Coating chips of lesser density coatings will be suspended in the post-LOCA fluid and will be more readily transported to and likely to collect on the strainer surface resulting in potentially higher head loss. (Note: Coating chips will be formed from the dry film of the PCI client specified coating material, or from a surrogate material of similar density, size, and shape. Surrogate materials such as sheet vinyl or plastic of the correct density and thickness may be used that are then broken-up, cut, torn, or punched to obtain the proper size and shape as specified by the PCI client.).
- Per CPSES testing, coating chips will be approximately 1/32" and larger based on testing performed by Keeler & Long.
- The conclusion is that walnut shell flour (or stone flour, or other similar surrogates – based on density, size, shape, texture, etc.) is a bounding and conservative surrogate material for coatings with densities above 75 lb/ft^3 such as epoxy, enamel, acrylic, and alkyd coatings. For inorganic zinc coatings (including primers), the use of tin powder is an acceptable surrogate.

NRC Request

- *Describe any ongoing containment coating condition assessment program.*

ENO Response

Engineering manual procedure EM-09-23, "Safety Related Coatings Program," requires that assessments of coatings in containment be performed each refueling outage. These assessments are performed using permanent maintenance procedure CLP-M-7, "Containment Coating Condition Assessment." The assessment procedure generally conforms to the guideline of ASTM D 5163, "Standard Procedures to Monitor the Performance of Safety Related Coatings in an Operating Nuclear Power Plant," and EPRI "Guideline on Nuclear Safety-Related Coatings, Revision 1 (formerly TR-109937). The use of ASTM D 5163 is endorsed by the NRC in Regulatory Guide 1.54, "Service Level I, II and III Protective Coatings Applied to Nuclear Power Plants," Revision 1.

CLP-M-7 requires a general visual inspection of all accessible surface areas inside of containment. The coating assessment inspections are performed by at least two individuals who are qualified in accordance with the procedural requirements. The inspections are performed to identify changes in the amount of degraded qualified and unqualified coatings which have occurred from the previous assessment.

Containment degraded qualified and unqualified coatings are documented in a log. Potential changes to the containment coatings log identified during the assessment are evaluated with revisions to the log performed, as appropriate. Additional destructive or non-destructive testing may be performed if required. Acceptance criteria are provided in the assessment procedure to ensure design limits are maintained. If the acceptance criteria are exceeded, then the procedure requires that a condition report be initiated for evaluation using the corrective action process.

EM-09-23 and CLP-M-7 require that an assessment report be generated upon completion of the assessment. The report includes a summary of the results of the assessment, details of the quantity of degraded qualified and unqualified coatings identified in containment, comparisons to the acceptance criteria, and recommendations for repair. The report provides a mechanism to ensure that the appropriate levels of plant management are cognizant of the assessment results.

The containment coating condition assessment performed, during the fall 2007 refueling outage, found that the overall condition of containment qualified coatings remained good, and was essentially unchanged from the previous inspection. No large areas of qualified coating delamination were identified during the inspection and the qualified coatings were adhering as expected. The volume of degraded qualified and unqualified coatings identified in containment was determined to be acceptable based on current design limits.

NRC Request

- *Describe and provide bases for assumptions made in post-LOCA paint debris transport analysis.*

ENO Response

The head loss testing performed assumed 100% post LOCA paint debris is transported to the sump. As mentioned in Section 3.f. of this document, the test was performed using the bounding case loading of PBNP debris mix.

The combined debris and chemical precipitation head loss test is to take credit for debris settlement in the sump water. In order to apply the debris transport correctly in the prototypical test, a CFD analysis of containment flow pattern is being developed to predict the strainer approaching velocity and turbulence.

References

3.h.1 Palisades Drawing C-83, Exterior Painting Schedule, Revision 4.

3.h.2. Sargent & Lundy DIT-CPC-038-00 "Palisades Containment Coatings-Summary of Findings," August 28, 1988

3.h.3 Sure-Flow ® Suction Strainer – Testing Debris Preparation & Surrogates Technical Document No. SFSS-TD-2007-004, Revision DRAFT-10, November 1, 2007

3.i. Debris Source Term

NRC Request

The objective of the debris source term section is to identify any significant design and operational measures taken to control or reduce the plant debris source term to prevent potential adverse effects on the ECCS and CSS recirculation functions.

- *Provide the information requested in GL 04-02 Requested Information Item 2.(f) regarding programmatic controls taken to limit debris sources in containment.*

> *GL 2004-02 Requested Information Item 2(f)*
> *A description of the existing or planned programmatic controls that will ensure that potential sources of debris introduced into containment (e.g., insulations, signs, coatings, and foreign materials) will be assessed for potential adverse effects on the ECCS and CSS recirculation functions. Addressees may reference their responses to GL 98-04, "Potential for Degradation of the Emergency Core Cooling System and the Containment Spray System after a Loss-of-Coolant Accident Because of Construction and Protective Coating Deficiencies and Foreign Material in Containment, "to the extent that their responses address these specific foreign material control issues.*

In responding to GL 2004 Requested Information Item 2(f), provide the following:

- *A summary of the containment housekeeping programmatic controls in place to control or reduce the latent debris burden. Specifically for RMI/low-fiber plants, provide a description of programmatic controls to maintain the latent debris fiber source term into the future to ensure assumptions and conclusions regarding inability to form a thin bed of fibrous debris remain valid.*
- *A summary of the foreign material exclusion programmatic controls in place to control the introduction of foreign material into the containment*

ENO Response

Programmatic controls that address GL 2004-02 Requested Information Item 2(f) are described below:

- Administrative Procedure (AP)1.10, "Plant System, Structure, and Component Labeling," was identified in the August 25, 2005, NMC response to GL 2004-02. AP 1.10 addresses the use of proper labeling materials inside the containment building. AP 1.10, Section 5.2.3 states, "Temporary tags may be used in the Containment Building during an outage, but shall be removed prior to containment closeout." Therefore, the requirements of AP 1.10 ensure problem identification tags are removed prior to containment closeout.

- AP 1.01, "Materiel Condition Standards and Housekeeping Responsibilities," was identified in the August 25, 2005, NMC response to GL 2004-02. AP 1.01 has since been revised. Section 6.10 of the procedure addresses "Areas Requiring Special Housekeeping Standards." Section 6.10.1.a. identifies general cleanliness requirements in the reactor building by stating that general cleanliness "should be maintained by periodic cleanup efforts of the work areas. This is especially important during refueling outages when multiple in-progress jobs can result in large accumulations of tools, materials, supplies, debris, etc, some of which, may be highly radioactive or contaminated. Reference Permanent Maintenance Procedure MSM-M-71, "Containment Cleanliness Implementation Plan and Containment Closeout," for specific instructions."

- AP 1.33, "Site Foreign Material Exclusion Program," is to help avoid the introduction of debris and foreign material into plant systems. All personnel performing maintenance, operating activities, venting, draining, filling, flushing, modification, repair or inspection activities on open systems, components, and processes are trained to this procedure. The procedure provides detailed foreign material exclusion (FME) program responsibilities and standards to support the FME process. The containment floor drains are designated as a FME area with specific controls associated with them to preclude loose debris from being introduced into plant systems. The procedure also establishes the containment building as a FME area any time the containment closeout inspections have been completed and the plant is in Mode 1, 2, 3 or 4. The designation of the containment as a FME area imposes very stringent controls on material and tool accountability in containment during Modes1 through 4.

- AP 5.01, "Processing Work Requests Work Orders," was identified in the NMC August 25, 2005, response to GL 2004-02, as prohibiting the use of the component problem identification tags, which are temporary tags used to identify equipment for which corrective maintenance has been requested in the containment. Subsequently, this procedure was cancelled and replaced by NMC fleet procedure FP-WM-PLA-01 "Work Order Planning Process." FP-WM-PLA-01, does not contain the component problem identification tag prohibition in containment that the original procedure AP 5.01 contained.

  Operation of PNP was transferred to ENO on April 11, 2007. The transition to the ENO procedures for work management, and more specifically adoption of ENO procedure EN-WM-100, "Work Request (WR) Generation, Screening and Classification," had not occurred at the time of plant start-up following the fall 2007 refueling outage. The ENO work management system does not include hanging component problem identification tags. Therefore, no component problem identification tags will be hung once this procedure is effective at PNP. Until that time, AP 1.10, as noted above, provides sufficient implementation of tag removal. AP 1.10 states in Section 5.2.3, "Temporary tags may be used in

the Containment Building during an outage, but shall be removed prior to containment closeout." Therefore, the requirements of AP 1.10 ensure problem identification tags are removed prior to containment closeout. The transition to ENO procedures is expected to be completed by the second quarter of 2008.

- AP 5.09, "Maintenance Cleanliness Standards," was identified in the August 25, 2005, NMC response to GL 2004-02 as establishing the containment as a work area with special cleanliness requirements. AP 5.09 provided conditions for the establishment of material and tool accountability requirements to help ensure material or debris is not inadvertently left in containment during power operations. AP 5.09 was subsequently cancelled and was replaced by AP 1.33, "Palisades Foreign Material Exclusion Program." AP 1.33 establishes the containment as a FME area with specific cleanliness control requirements. It further provides conditions for the establishment of material and tool accountability requirements to help ensure material or debris is not inadvertently left in containment during power operations.

- AP 5.34, "Special Process Control," was identified in the August 25, 2005, NMC response to GL 2004-02. AP 5.34 identifies that if a failure of the special process could adversely affect a safety-related or important to safety structure, system, or component (e.g., could an unanalyzed failure of a coating/paint lead to clogging of the containment sump) then the special process shall be fully controlled by AP 5.34.

- Specification A-130, "Technical Specification for Painting," was identified in the August 25, 2005, NMC response to GL 2004-02. Specification A-130 was revised to update the requirements of coating applications inside containment in accordance with current regulatory and industry standards. The primary changes of the specification involve the definitions of service levels of coatings and their requirements. The specification revision enhanced the requirements for the selection, surface preparation, application, inspection and personnel training for qualified Service Level 1 coating inside containment. The definition of the ZOI (in Attachment 3 of the existing revision) from the GL 98-04 compliance is replaced by the ZOI definition in line with GSI-191 requirements.

- Specification M-136, "Furnishing and Installing Conventional Type Insulation," was identified in the NMC August 25, 2005, response to GL 2004-02. Specification M-136 incorporated GSI-191 resolution changes explicitly requiring an engineering change process for replacing the thermal insulation material inside containment, except for the like-for-like replacements of piping insulation and for replacing the aluminum pipe insulation jackets with the stainless jacketing.

- Fleet Modification Procedure FP-E-MOD-04, "Design Inputs," was identified in the NMC August 25, 2005, response to GL 2004-02. QF-0515A (FP-E-MOD-04)

Design Input Checklist (Part A-Engineering Programs and Departmental Reviews)," is required to be completed to obtain design inputs for modifications per procedure FP-E-MOD-04, Revision 3. The Design Input Checklist incorporated a Containment Sump Blockage design checklist to determine if the proposed plant modification affects the containment sump analysis. If the answer to any of the questions is yes, it requires a consultation with the containment debris coordinator (Design Engineering) or other suitable subject matter expert. The ENO design modification procedures have since been adopted at PNP. In ENO procedure EN-DC-115, "Engineering Change Development," the design modification controls of the debris source are incorporated in the checklists for a two level design impact evaluation. The impact on coating, insulation, labels, aluminum or other metal/non-metallic sources in the containment are required to be addressed by the procedure.

- Fire Protection Surveillance Procedure FPSP-RP-12, "Fire Rated Assemblies and Fire Protection Assemblies," was identified in the NMC August 25, 2005, response to GL 2004-02. FPSP-RP-12 is used to inspect cable tray fire stops located in containment. This surveillance requires that a visual inspection of the integrity of fire rated assemblies and fire protection assemblies be performed every 18 months, thus reducing the potential containment debris source from the fire protection assemblies.

- Technical Specification Surveillance Procedure RT-142, "Containment Inservice Inspection-Metal Liner," was identified in the NMC August 25, 2005, response to GL 2004-02. RT-142 is used to perform inspections of the containment liner to fulfill TS surveillance and administrative control requirements. This procedure requires that inspected areas which are painted or coated be examined for flaking, blistering, peeling or discoloration.

- Technical Specification Surveillance Procedure RT-92, "Inspection of Containment Sump Envelope," was identified in the NMC August 25, 2005, response to GL 2004-02. RT-92 verifies, by visual inspection, that each containment sump inlet debris screen, containment sump passive strainer assembly, and other containment sump entrance pathways are not restricted by debris and show no evidence of structural distress or abnormal corrosion in order to satisfy TS SR 3.5.2.9. This procedure also performs a cleanliness inspection of the containment sump, condition assessment of the sump level switches, sump drain screen, and the containment sump liner. The inspection includes the biological cleanliness of the sump. Algae and/or slime in the sump that would impede ECCS operation are procedurally required to be removed.

- General Operating Procedure GOP-2, "Mode 5 to Mode 3 ≥ 525 F," was identified in the NMC August 25, 2005, response to GL 2004-02. GOP-2 contains requirements to remove caution tags from containment and to perform

inspections of containment in accordance with System Operating Procedure SOP-1A, "Primary Coolant System."

- System Operating Procedure SOP-1A, "Primary Coolant System," was identified in the NMC August 25, 2005, response to GL 2004-02. SOP-1A identifies the senior reactor operator inspections in support of containment closeout to ensure the integrity of the containment sump envelope and containment sump screens, and to remove unauthorized material.

- Permanent Maintenance Procedure MSM-M-71, "Containment Cleanliness Implementation Plan and Containment Closeout," ensures containment cleanliness throughout outage and/or online work activities in containment and to provide guidelines to prepare for the final closeout inspection performed by the operations department under SOP-1A, Attachment 6, Checklist CL 1.4, " Containment Closeout Walk-Through."

- Permanent Maintenance Procedure CLP-M-7, "Containment Coating Condition Assessment," provides instructions for condition assessments of protective coatings within the PNP containment and to report the results. These assessments are performed to meet the requirements of the PNP Safety Related Coatings Program, EM-09-23.

  Containment coatings condition assessments are performed to identify changes in the amount of degraded qualified and unqualified coatings which have occurred from the previous assessment. The intent of the periodic assessments is to identify changes which have occurred from the previous assessment.

- Permanent Maintenance Procedure ESS-M-43, "Containment Sump Envelope Access Control," provides instructions for removing and installing containment sump envelope passive strainers and debris screens during operating modes 5 and 6.

- Engineering Manual Procedure EM-09-23, "Safety-Related Coatings Program," defines the requirements of the program that applies to coatings on the interior surfaces of the containment, exposed surfaces of equipment located in containment, and linings of tanks and piping where detachment could adversely affect the function of safety-related structures, systems or components and thereby impair safe shutdown.

  This program systematically ensures that safety-related coatings systems are properly selected, applied, maintained, assessed, repaired, or removed to assure required coating integrity and design function performance. The program helps ensure that the design limits associated with potential containment post accident coating based debris are not exceeded.

- Permanent Maintenance Procedure MSM-M-42, "Application Of Qualified Service Level I Coatings (Paint)," provides requirements for application of qualified Service Level I protective coatings to surfaces inside, or to systems, structures or components that will be installed inside, the containment. Qualified Service Level I (safety related) coatings are assumed to remain in place during accident conditions and their failure could adversely affect the operation of post-accident fluid systems and thereby, impair safe shutdown. This procedure provides controls for the application of Qualified Service Level I coatings which help ensure they perform as designed and tested.

- Technical Specification Surveillance Procedure RM-124, "Sodium Tetraborate (STB) Basket Weights," is a technical surveillance procedure that ensures a sufficient amount of sump buffering agent is installed inside containment. In order to minimize the risk of chemically breaking down the insulation material under the post-LOCA environment, the procedure controls the amount of STB installed to the lowest practical level. The weight of the STB in the 20 baskets is compared to the minimum weight required to achieve a post-LOCA sump pH value of 7.0.

NRC Request

- *A description of how permanent plant changes inside containment are programmatically controlled so as to not change the analytical assumptions and numerical inputs of the licensee analyses supporting the conclusion that the reactor plant remains in compliance with 10 CFR 50.46 and related regulatory requirements.*

ENO Response

The permanent plant changes are implemented by the engineering change process. The controls of the debris source are required by the modification change procedure EN-DC-115, "Engineering Change Development," via the use of checklists. Two checklists required by EN-DC-115 are the Impact Screening Summary and the Detailed Impact Screening Criteria. These checklists include the screening criteria of impact on the coating, insulation, labels, and aluminum and metal/non-metallic sources of debris in the containment building. Any change of the screened parameters is subjected to evaluation to ensure the compliance to the design bases.

NRC Request

- *A description of how maintenance activities including associated temporary changes are assessed and managed in accordance with the Maintenance Rule, 10 CFR 50.65.*

ENO Response

The maintenance activities including associated temporary changes in the containment are subject to the procedural requirements of MSM-M-71, "Containment Cleanliness Implementation Plan and Containment Closeout." This procedure ensures containment cleanliness throughout an outage and/or online work activities in containment and provides guidelines to prepare for the final closeout inspection performed by the operations department under SOP-1A, Attachment 6, Checklist CL 1.4, "Containment Closeout Walk-Through." MSM-M-71 provides specific housekeeping standards, inspection schedule information and detailed inspection checklists. The procedure includes a list of items that have been approved to remain in containment and a questionnaire to be used when requesting that other items be left in containment on a permanent basis. The questionnaire includes questions related to sump screen plugging, chemical effects and downstream effects. The stated intent of the containment close out inspection is, "to ensure that loose material capable of plugging the containment sump strainers, containment downcomer or vent screens, and 590' elevation floor drains is removed."

EN-DC-136, "Temporary Modifications," provides controls to ensure operator awareness, conformance with design intent and operability requirements, and preservation of plant safety and reliability. The procedure addresses the alteration of any quality-related structure, system, or component and the addition of aluminum into containment. The process provides specific guidance for the use of tags associated with temporary modifications in containment and the potential for them becoming sump debris. The procedure further requires evaluation of the temporary modification materials' compatibility with the service and environment, evaluation for impact on adjacent quality-related equipment, and evaluation for the impact of failures on other equipment, including common mode failures.

AP 4.02, "Control of Equipment," AP 2.09, "Outage Planning, Scheduling and Management," and EN-WM-109, "Scheduling," all provide procedural guidance and requirements to minimize risk associated with conducting work. Procedure EN-WM-109 ensures that on-line schedules are risk assessed using both quantitative and qualitative risk analysis and that risk evaluations are performed prior to and during outage schedule implementation. Procedure AP 4.02 provides guidance for assessing and managing risk associated with scheduled on-line activities (Mode 1, 2 and 3) prior to the execution of planned equipment outages, and for re-evaluating the risk impact of emergent changes that are made to the original schedule, as required by 10 CFR 50.65 (a)(4) of the Maintenance Rule. AP 2.09 ensures that risk assessments are performed on the outage schedule and further provides specific requirements for the assessments.

EN-WM-105, "Planning," provides instructions to ensure that work is planned in a manner consistent with its importance to plant safety. In addition to the normal work order planning process, the procedure requires completing an impact assessment for

the component that includes evaluating if other components are directly affected by this work activity and evaluating the impact on TS associated with the affected systems or components. The procedure specifically requires reviewing the required task for foreign material exclusion consideration or requirements, cleanliness control requirements, insulation and paint removal or application.

Specification A-130, "Technical Specification for Painting," requires the notification of the safety related coatings program owner whenever there is an addition, removal, repair, or touch up of coatings inside of containment or any areas outside containment where coatings failure could adversely affect the safety function of a safety-related structure, system or component. It further requires a review by the safety related coatings program owner for modifications or repairs of equipment inside of containment which includes paint or coatings.

EM-09-23, "Safety-Related Coatings Program," requires that modifications or repairs of equipment inside of containment, which includes paint or coatings, be evaluated for impact on the quantity of qualified, degraded qualified or unqualified coatings. The procedure also requires a review of all coating work inside of containment be performed for potential impact. Changes to coatings in containment are provided to design engineering or analysis personnel for evaluation, as appropriate. Changes to the quantity of unqualified or degraded qualified coatings within containment are maintained on a coatings log to help ensure that coatings will not impact safe operation of the containment sump and engineered safeguards equipment subsequent to a DBA.

NRC Request

If any of the following suggested design and operational refinements given in the guidance report (guidance report, Section 5) and SE (SE, Section 5.1) were used, summarize the application of the refinements.

- *Recent or planned insulation change-outs in the containment which will reduce the debris burden at the sump strainers.*

ENO Response

No recent or planned insulation change-outs to reduce the debris burden have been performed.

NRC Request

Any actions taken to modify existing insulation (e.g., jacketing or banding) to reduce the debris burden at the sump strainers.

ENO Response

No actions have been taken to reduce the debris burden by modifying existing insulation.

NRC Request

- *Modifications to equipment or systems conducted to reduce the debris burden at the sump strainers*

ENO Response

To reduce the chemical effects described in NRC Information Notice 05-26, ENO replaced the sump buffering agent during the fall 2007 refueling outage, replacing the trisodium phosphate with sodium tetraborate. This modification is described in section 3.o of this document.

NRC Request

- *Actions taken to modify or improve the containment coatings program.*

ENO Response

The enhancement of monitoring the containment coating is implemented in the Procedure CLP-M-7, "Containment Coating Condition Assessment."

3.j. Screen Modification Package

NRC Request

The objective of the screen modification package section is to provide a basic description of the sump screen modification.

- *Provide a description of the major features of the sump screen design modification.*

ENO Response

The intent of the modification was to perform the hardware changes required to bring PNP into full resolution with NRC GSI-191. This modification replaced the existing ECCS suction inlet screens for the PNP containment sump, which were located interior to the containment sump in the containment building (Attachment 1), with an engineered strainer system installed on the containment base slab (590-foot elevation).

The containment sump at PNP is a chamber located under the reactor cavity floor at a lower elevation than the containment 590-foot elevation to permit floor drain collection of system leakage within containment during normal plant operation and following a LOCA. The containment sump entrance pathways consist of containment sump downcomers, containment floor drains, containment sump vent lines, and reactor cavity drains. There are six containment sump downcomers, which are located two inches above the containment floor at the 590-foot elevation. The downcomers provide a connection between the containment sump and the containment 590-foot elevation. The containment floor drains collect and transport system leakage via embedded drain lines to the containment sump. The containment sump vent lines assist in the release of air that may be collected at the top of the containment sump during LOCA flood up. The reactor cavity drain lines contain reactor cavity corium plugs. The reactor cavity corium plugs are designed to inhibit the flow of core debris (corium) into the containment sump. The containment sump exit pathways consist of two suction pipes that provide flow paths to the ECCS pumps and one containment sump drain line. Following an accident, during the recirculation mode of emergency core cooling, the sump supplies a suction source of water to the ECCS and CSS pumps with adequate NPSH.

The modification installed passive, safety-related Sure-Flow ® Strainer assemblies, engineered, manufactured, and qualified by PCI.

The passive Sure-Flow ® Strainer assembly system consists of two strainer assemblies which are composed of four strainer sub-assemblies (Attachment 2). Two strainer sub-assemblies consist of four modules each and connect to one of the two associated downcomers. The other two strainer sub-assemblies consist of nine modules and six modules and connect to the other associated downcomer.

The PCI Sure-Flow ® suction strainer assemblies for PNP are various combinations of horizontally oriented modules, each containing ten disks. The disks are a nominal five

inches thick and are separated nine inches from each adjacent disk. The interior of the disks contain rectangular wire stiffeners for support, configured as a "sandwich" made up of three layers of wires - 7 gauge, 8 gauge, and 7 gauge. The disks are completely covered with perforated plate having 0.045" holes. The end disk of a module is separated approximately five inches from the end disk of the adjacent module. The five-inch space between adjacent modules is connected together by means of a solid sheet metal "collar" fitted over the core tubes and secured by a latch that is used to prevent debris from entering the system between the two modules. This connection permits relative motion in the axial direction as the core tube can slide relative to the stainless steel bands. Each of the modules has cross-bracing on the two exterior vertical surfaces of each module. Based on the design configuration of the PNP strainer assembly, the largest opening for water to enter into the sump is through the perforated plate 0.045" holes. Each module is independently supported. The modules are pin-connected to a mounting track, which in turn is bolted to the containment slab. The mounting track is made of structural shapes: angles and plates. The strainer design allows for disassembly, replacement of modules, or addition of future modules as needed. The modules are essentially identical with the only difference being the "window" slot sizes in the core tube. The Sure-Flow ® Strainer module core tubes are 12.13 inch ID, 16-gauge, stainless steel pipe.

The horizontally oriented strainer assemblies have a total strainer surface area of approximately 3,514 ft^2. The strainer approach velocity value is 0.0023 feet per second (fps), an extremely low approach velocity when compared to the design value for the original ECCS screens. The strainer approach velocity is defined as the quotient of strainer flow rate and total surface area. The flow rate at the circumscribed area (applicable to the high fiber test(s)) is 0.012 fps. The strainer configuration was originally sized to limit the head loss to less than 2.6 feet during post-LOCA design debris loading.

The ECCS and CSS design flow path is from the passive strainer module assemblies and enters one of the two downcomers before discharging into the enclosed sump which is directly connected to the ECCS and CSS pump suction lines.

In order to balance the clean strainer head losses between the two separate passive Sure-Flow ® Strainer assemblies entering the two separate sump downcomers, each assembly has differing strainer assembly discharge pipe diameters and associated balancing orifice installed.

The two 4-Module Units to Downcomer 1 use 12-inch schedule 10 stainless steel pipe, associated pipe fittings and a 10-11/16-inch diameter orifice installed at the last flange before the downcomer to balance the head loss of the units to the other strainer to deliver the strained water into the sump through Downcomer 1.

The 9-Module and 6-Module Units to Downcomer 5 use 16-inch schedule 10 stainless steel pipe, associated pipe fittings and a 10-5/8-inch diameter orifice installed at the last

flange on the 6-Module unit before the 6 and 9 module units tee to the common downcomer to balance the head loss of the units to the other strainer to deliver the strained water into the sump through Downcomer 5.

These two containment sump downcomer pipes provide the post-LOCA credited flow pathway from the post-LOCA inventory which has accumulated on the 590' elevation of containment through the passive strainer assemblies to the containment sump to provide the RAS suction source of water to the ECCS and CSS pumps.

In addition to the passive containment sump strainer assemblies, debris screens have been installed on the remaining open containment sump entrance pathways, which include the four remaining downcomer pipes, the seven containment floor drains, and the two containment sump vent lines.

The reactor cavity corium plugs, located in the reactor cavity drain lines, contain ceramic pellets within the corium plug tube, tube end cap, and tube bottom cup support assembly, which form a debris interceptor similar in functionality to the debris screens. The strainer assemblies, together with the debris screens and the reactor cavity drain plugs, protect the common containment sump, rather than protecting only the ECCS/CSS pump suction lines.

The passive Sure-Flow ® Strainer assembly with associated debris screens, and the placement of the corium plugs, provide 100% debris retention outside of the containment sump envelop of greater than 0.045" diameter debris and thereby prevent the degraded operation of the HPSI and CSS resulting from debris during accident conditions. The modification was installed during the 2007 refueling outage.

NRC Request

- *Provide a list of any modifications, such as reroute of piping and other components, relocation of supports, addition of whip restraints and missile shields, etc., necessitated by the sump strainer modifications.*

ENO Response

The sump strainer modification was designed with the objective of minimizing the impact on plant installed equipment and structures. The installation of the sump strainers did not require the modification of pipe, supports or missile shields. The only relocation of equipment involved in the sump modification was the baskets of the containment buffering agent. Due to the installation of the strainer assemblies, the 20 containment buffer baskets, containing sodium tetraborate were relocated on the containment base slab.

3.k. Sump Structural Analysis

NRC Request

The objective of the sump structural analysis section is to verify the structural adequacy of the sump strainer including seismic loads and loads due to differential pressure, missiles, and jet forces.

Provide the information requested in GL 2004-02 Requested Information Item 2(d)(vii).

> *<u>GL 2004-02 Requested Information Item 2(d)(vii)</u>*
> *Verification that the strength of the trash racks is adequate to protect the debris screens from missiles and other large debris. The submittal should also provide verification that the trash racks and sump screens are capable of withstanding the loads imposed by expanding jets, missiles, the accumulation of debris, and pressure differentials caused by post-LOCA blockage under flow conditions.*

- *Summarize the design inputs, design codes, loads, and load combinations used for the sump strainer structural analysis.*

ENO Response

The sump replacement strainer pressure retaining components have been designed and analyzed to the standards of American National Standards Institute (ANSI), American Society of Mechanical Engineers; (ASME) B31.1, Power Piping 1973 Edition through summer 1973 Addenda, for the specified normal and accident conditions inside containment. The strainers are classified as "other pressure-retaining components," as described in Paragraph 104.7 of the ANSI (ASME) B31.1 Code. Many of the strainer components, are unique, and ANSI (ASME) B31.1 does not provide specific design guidance for these types of components.

The ASME Code is used for the qualification of pressure retaining parts of the strainer which are not covered in B31.1 (perforated plate, and internal wire stiffeners). Some parts of the strainers (external radial stiffeners, seismic stiffeners, tension rods, edge channels, etc.) are classified as part of the support structure. Structural support members are designed and fabricated to the standards of USA Standards Institute (ASME) B31.1 and the American Institute of Steel Construction (AISC) Structural Steel Specification, Eighth Edition, 1980." Strainer assembly angle iron support tracks were evaluated per AISC 9th Edition.

Additional guidance is also taken from other codes and standards where the AISC code does not provide specific rules for certain aspects of the design. For instance, the strainers are made from stainless steel materials. The AISC Code does not specifically cover stainless steel materials. Therefore, ANSI/AISC N690-1994, "Specification for the Design, Fabrication, and Erection of Steel Safety Related

Structures for Nuclear Facilities," was used to supplement the AISC in any areas related specifically to the structural qualification of stainless steel. Note that only the allowable stresses are used from this N690-1994 Code and load combinations and allowable stress factors for higher service level loads are not used.

The strainer also has several components made from thin gage sheet steel, and cold formed stainless sheet steel. Therefore, Structural Engineering Institute/American Society of Civil Engineers (SEI/ASCE) 8-02, "Specification for the Design of Cold-Formed Stainless Steel Structural Members," was used for certain components where rules specific to thin gage and cold form stainless steel are applicable. The rules for Allowable Stress Design as specified in Appendix D of this code were used. This was further supplemented by the American Iron & Steel Institute (AISI) Code, 1996, "Specification for the Design of Cold-Formed Steel Structural Members," where the ASCE Code is lacking specific guidance. Finally, guidance is also taken from American Welding Society (AWS) D1.6, "Structural Welding Code - Stainless Steel," as it relates to the qualification of stainless steel welds.

The design conditions for the strainer modules, as defined in the strainer procurement specification, include the live load, differential pressure loads, thermal loading, and seismic events (safe shutdown earthquake (SSE) and operating basis earthquake (OBE)). The limiting condition considered is a SSE that occurs while the strainer is in a submerged condition after a LOCA. The ability of the strainers to perform their safety functions during and/or after an OBE and SSE has been demonstrated in the seismic analysis report for PNP, which concludes that: "The strainer assemblies are designed to the loadings of dead weight, pressure, thermal, seismic and seismic sloshing, without loss of structural integrity. A maximum analytical differential pressure load of 3.14 psi, which amounts to 7.25 ft water column, was applied in the structural analyses." The load combinations for the strainer discharge piping and piping supports are defined in the preceding section and are in conformance with FSAR Section 5.10.1.1 and 5.10.1.2 requirements.

Dead Weight Loads

Dead weight load due to debris on the strainer was determined by calculating the quantity of debris that would be deposited onto each PCI strainer module by the most limiting break. In addition to the analysis, PCI performed hydraulic testing that simulated the actual debris loading conditions with post LOCA debris concentrations that enveloped PNP's debris concentrations. The analysis and testing demonstrate that the full strainer installation design ensures that the strainers are capable of withstanding the force of full debris loading in conjunction with design basis conditions, including seismic activity.

Debris Load

The strainers were designed to ensure that they are capable of withstanding the force of full debris loading, in conjunction with design basis conditions. The effect of the debris load was reflected in the dead weight and suction pressure terms of the

analysis. The strainers are capable of withstanding the force of full debris loading for the design basis load combinations discussed below.

Live Load

In addition to the dead weight loads, live loads, which would occur only during the refueling outage and strainer installation, were considered in the design analyses.

Hydrodynamic Mass

Hydrodynamic forces were considered in the seismic analysis of the strainer assemblies and associated discharge piping. Specifically, the dynamic effects of surrounding water on the submerged strainer structure during an earthquake, i.e., added water mass, inertia coupling, impulse, sloshing, wave actions, damping, and participation of added water mass in the forcing term were considered. A generic seismic sloshing analysis performed by the strainer vendor (PCI) concluded that the sloshing loads on the strainers are negligible. The analysis was based on a close form solution where the containment was modeled as an annular tank. An equivalent mechanical model of the slosh caused by a horizontal excitation of the tank was composed of a series of oscillating slosh masses supported by mechanical springs. The water mass was broken into two parts, a rigid mass that behaves like a mass that is rigidly attached to the tank, and a sloshing mass that oscillates between the tank walls. The model was used to determine the sloshing velocity, which in turn was used to calculate the drag forces in the strainer modules. Although the values of the parameters used in the generic analysis are different than the values associated with PNP, the differences would not result in a different conclusion (i.e. sloshing loads are insignificant compared to the other seismic loads). The conservatism in the hydrodynamic mass determination outweighs any load resulting from sloshing of the water inside containment. Therefore, seismic slosh loads are neglected from the stress analysis.

Thermal Loads

Strainer assembly thermal expansion loads would be zero because the strainers are essentially freestanding structures and, for the most part, are free to expand without restraint. Therefore, thermal loads were considered negligible and were taken equal to zero. The thermal expansion of the strainer assembly discharge piping was taken at a temperature equal to the maximum sump water temperature. Small gaps were modeled for certain supports in the thermal analysis to account for the gaps in the pipe supports. A 1/16" gap was modeled on top of the pipe for all supports, and a 1/16" gap was modeled on either side of the shear lugs for the three-way supports. The gaps are designed to minimize unrealistic thermal loads on the sump piping. To allow for relative thermal expansion between adjacent strainer assembly modules, as well as the strainer discharge piping and the reactor building, adjacent modules are installed with a gap between them. The gap would be sealed with a load compliant metallic sleeve.

Seismic Loads

The seismic loading considered both the reactions of seismic inertia and seismic sloshing. The hydrodynamic mass of the strainer, which would be subject to seismic accelerations, was calculated based on the mass of water enclosed by the strainer, plus the added mass from the water surrounding the strainer. The strainer purchase specification included the amplified response spectra used in the seismic analysis, which are the SSE and OBE seismic response spectra for all three directions at two-percent damping. The strainer modeling was excited in each of the three mutually perpendicular directions, two horizontal and one vertical. The modal combination was performed by the ten percent method combination per the PNP FSAR, which refers to Section 1.2 of Regulatory Guide 1.92, "Combining Modal Responses and Spatial Components in Seismic Response Analysis," for closely spaced modes. Seismic response from the vertical and two horizontal directions were combined by the use of the square-root-sum-of-the-squares (SRSS) method. The cutoff frequency was taken at 33 Hertz. Zero period acceleration (ZPA) residual mass effects were considered. The ZPA response was conservatively added to the response spectra loads by SRSS. The seismic analysis report for the replacement sump strainers states that the strainers have been analyzed, as required, for the specified normal and accident conditions inside containment, and the strainer meets all the acceptance criteria for all applicable loadings. The seismic analysis report for the strainer discharge piping and supports demonstrates that the pipe stresses and support loads are acceptable. The piping stresses, flanges, and support component stresses are within their respective applicable limits and are, therefore, acceptable.

Differential Pressure Loads

A conservative pressure loading of 3.14 pounds per square inch (psi), which is equivalent to a pressure head of 7.25 feet of water, was applied to the structural analyses. The allowable maximum differential pressure load is limited by the ECCS pump NPSH requirement, which is less than the 7.25 feet.

Other Dynamic Effects

The potential of jet impingement and pipe whip were also evaluated and found to be not creditable. The PCS loop pipes, including the pressurizer surge line, and the strainer assemblies are separated by a concrete floor. There are no direct pathways between the strainer locations and any high energy line break associated piping locations.

Load Combinations

The replacement strainer assemblies and the discharge piping segments are designed to the following service loadings:

Sump Strainers

Loading Conditions	Loading Combinations
(1a) Normal Operating	DW +DEB + DP
(1b) Normal Operating (outage/Lift Load)	DW + LL
(2) Upset	DW + DEB + DP + OBE
(3) Faulted	DW + DEB + DP + SSE

Where:
DW = Dead Weight
LL = Live Load (Additional Live loads acting on strainer assembly during outage and installation)
DP = Differential Pressure
DEB =Weight of Debris
OBE =Operating Basis Earthquake (2% damping seismic response spectra)
SSE = Design basis earthquake = Safe Shutdown Earthquake = 2 x OBE

Strainer Discharge Piping

Loading Conditions	Loading Combinations
(1a) Hoop Stresses	DP
(1b) Normal (pressure + Sustained)	P+DW
(2) Upset	P + DW + OBE
(3) Faulted	P + DW + SSE
(4) Secondary	T1

Where:
DP = Design Pressure Hoop Stress
P = Differential Pressure
OBE =Operating Basis Earthquake
ASME Code Case N-411 method is employed.
SSE =Safe Shutdown Earthquake = 2 x OBE
T1 = Thermal Expansion (maximum sump water temperature of 264°F)

Strainer Discharge Pipe Support Structural Components

Loading Conditions Loading	Combinations
Normal	DW + T1
Upset	DW + OBE + T1
Faulted	DW + SSE + T1

Where:
DW = Dead Weight Load
OBE =Operating Basis Earthquake
SSE = Safe Shutdown Earthquake
T1 = Thermal Expansion (maximum sump water temperature of 264°F)

NRC Request

- *Summarize the structural qualification results and design margins for the various components of the sump strainer structural assembly.*

ENO Response

Detailed stress analyses have been performed on strainer parts, strainer assembly connecting piping, piping flanges and supports. All the component stresses analyzed meet the design allowables set forth in the design codes and standards described in the preceding discussion. The most limiting interaction ratio of the computed stress and the stress allowable for the strainer assembly is 0.95. This interaction ratio occurs at the sleeve banding which connects the strainer modules. The most limiting interaction for the strainer support is 0.97 which occurs at an expansion anchor to floor location. The most limiting interaction ratio for pipe and pipe supports was calculated as 0.92, which occurs at a base plate of one of the pipe supports.

NRC Request

- *Summarize the evaluations performed for dynamic effects such as pipe whip, jet impingement, and missile impacts associated with high-energy line breaks (as applicable).*

ENO Response

The evaluations performed for dynamics are discussed in the preceding description of the design loadings.

NRC Request

- *If a backflushing strategy is credited, provide a summary statement regarding the sump strainer structural analysis considering reverse flow.*

ENO Response

Back flushing is not credited in the PNP design of containment sump strainers.

3.l. Upstream Effects

NRC Request

The objective of the upstream effects assessment is to evaluate the flowpaths upstream of the containment sump for holdup of inventory which could reduce flow to and possibly starve the sump.

Provide a summary of the upstream effects evaluation including the information requested in GL 2004-02 Requested Information Item 2(d)(iv).

GL 2004-02 Requested Information Item 2(d)(iv)
The basis for concluding that the water inventory required to ensure adequate ECCS or CSS recirculation would not be held up or diverted by debris blockage at choke-points in containment recirculation sump return flowpaths.

- *Summarize the evaluation of the flow paths from the postulated break locations and containment spray washdown to identify potential choke points in the flow field upstream of the sump.*
- *Summarize measures taken to mitigate potential choke points.*
- *Summarize the evaluation of water holdup at installed curbs and/or debris interceptors.*

ENO Response

As is described in Section 3.j., and shown on Attachment 2, the PNP containment sump entranceways are protected from debris by perforated screens and strainer assemblies. The only pathway to sump credited for the post-LOCA recirculation flow is the PNP strainer assemblies which are installed on the floor of the containment base slab at 590 elevation. The 590' elevation is largely open at the floor level. Design modifications in 2004 eliminated two potential choke points; the opening of the clean waste receiver tank (CWRT) room door, and the installation of a blowout panel in the air room.

Referring to Attachment 2 of this document, a north-south run wall separates the CWRT room from the other area of the 590' level. On one end of the wall to the containment shell is a wire-fenced opening. The size of the opening is limited and is prone to be clogged by debris. On the other end of the wall, there is a door for controlling personnel entrance to this high radiation area during refueling outages. A door jam was installed in 2004 to keep the door open during reactor power operation. Thus, it ensures the recirculation water would not be held up in the CWRT room.

The blowout panel in the air room is a part of the Appendix R design requirements to impede the air flow to the area. The panel also serves as a locked high radiation area personnel isolation boundary. A breakable panel made of Marinite ® I material is

installed. This breakable panel design will relieve water build up inside the air room in the event of a LOCA. It is designed to rupture either by the LOCA pressure blowout or by a differential water level across the panel exceeding two feet.

NRC Request

- *Describe how potential blockage of reactor cavity and refueling cavity drains has been evaluated, including likelihood of blockage and amount of expected holdup.*

ENO Response

The holdup water volume considered in the containment minimum flood level analysis was attributed either by design or by conservative assessment when accurate quantification is difficult. Of the total 7799 ft^3 holdup volume, 4822 ft^3 is retained in the reactor cavity due to the design of the cavity flooding system. The remaining 2977 ft^3 water volume is retained on the 649' elevation floor, the 607' elevation floor, and the tilt pit and refueling cavity floor. The depths of water on the floors assessed vary from one to six inches. In most of the cases, the depth of the water retained on the floor is conservatively assumed as the height of the curbing in the area even though the area is not completely enclosed by the curbing. The water retained on the vertical surfaces is not included in the holdup volume since it is relatively negligible and is well bounded by the conservatism applied in the holdup volume analysis.

3.m. Downstream effects - Components and Systems

NRC Request

The objective of the downstream effects, components and systems section is to evaluate the effects of debris carried downstream of the containment sump screen on the function of the ECCS and CSS in terms of potential wear of components and blockage of flow streams. Provide the information requested in GL 04-02 Requested Information Item 2(d)(v) and 2(d)(vi) regarding blockage, plugging, and wear at restrictions and close tolerance locations in the ECCS and CSS downstream of the sump.

> *GL 2004-02 Requested Information Item 2(d)(v)*
> *The basis for concluding that inadequate core or containment cooling would not result due to debris blockage at flow restrictions in the ECCS and CSS flowpaths downstream of the sump screen, (e.g., a HPSI throttle valve, pump bearings and seals, fuel assembly inlet debris screen, or containment spray nozzles). The discussion should consider the adequacy of the sump screen=s mesh spacing and state the basis for concluding that adverse gaps or breaches are not present on the screen surface.*
>
> *GL 2004-02 Requested Information Item 2(d)(vi)*
> *Verification that the close-tolerance subcomponents in pumps, valves and other ECCS and CSS components are not susceptible to plugging or excessive wear due to extended post-accident operation with debris-laden fluids.*

ENO Response

The initial response to GL 2004-02 (Reference 3.m.7), for PNP, discussed the evaluation of the potential flow path blockage due to debris bypassing the strainers. The discussion referred to the then-proposed active strainers and a flow path evaluation based on 1/8-inch x 1/8-inch sump screen mesh size. Since then, a passive strainer system with a 0.045-inch hole size perforated screen design has been adopted and installed. The downstream clearance evaluation performed for the active strainer is applicable for the new passive strainer design since using the smaller holes size design is more limiting for both the debris bypass quantity and size.

As it is described in section 3.j of this document, the 0.045-inch perforated debris screens have been installed on the remaining open containment sump entrance pathways, which include the four remaining downcomer pipes, the seven containment floor drains, and the two containment sump vent lines. The flow paths from the reactor cavity are protected by the two corium plugs. These corium plugs contain ceramic pellets within the corium plug tube, tube end cap, and tube bottom cup support assembly, which form a debris interceptor similar in functionality to the debris screens. The migration of LOCA-generated debris larger than the strainer perforation diameter

through the two one-inch reactor cavity drain line corium plugs is not considered to be credible. The passive Sure-Flow ® Strainer assemblies with associated debris screens and the placement of the corium plugs provide 100% debris retention outside of the containment sump envelop of greater than 0.045" diameter debris.

Periodic inspection of the sump entrance pathways is administrated under the TS surveillance testing program. It requires that within every 18 months:

> "Verify, by visual inspection, the containment sump passive strainer assemblies are not restricted by debris, and the containment sump passive strainer assemblies and other containment sump entrance pathways show no evidence of structural distress or abnormal corrosion."

NRC Request

- *If NRC-approved methods were used (e.g., WCAP-16406-P with accompanying NRC SE)1, briefly summarize the application of the methods. Indicate where the approved methods were not used or exceptions were taken, and summarize the evaluation of those areas.*
- *Provide a summary and conclusions of downstream evaluations.*

ENO Response

Two different debris transport analyses have been used. ENO is preparing to do a modification to the second analysis in response to a change in the methodology in the guiding WCAP (Reference 3.m.1) generic report.

<u>Original Down Stream Analysis</u>
The original downstream analysis effort was done during planning to use active strainers. Also, at that time, the intention was to continue using TSP as a post-LOCA sump pH buffer. This analysis was used in the original reply to GL 2004-02.

This analysis (Reference 3.m.2) used the guidance of WCAP-16406-P, Draft Revision 0, of March 2005, and WCAP-16406-P, final Revision 0, version dated June 2005. The intention of the WCAP was to be consistent with NEI 04-07, which in turn was evaluated in the NRC NEI 04-07 SE. The analysis also relied upon Los Alamos Reports LA-UR-04-5416 (Reference 3.m.3), and LA-UR-01-6640 (Reference 3.m.4). No credit was taken for any kind of settlement of particulate debris or fiberglass since the active screens do not accumulate any debris. Screen bypass factors were applied which were primarily taken from WCAP-16406 and the two Los Alamos reports. The wear due to chemical precipitants was not considered. It was believed, at the time, that all chemical precipitates would be soft flocculent particles which would break up under strainer passage and pump impeller flow conditions to become particles too

small (sub micron size) to cause surface contact and abrasive wear and too light to cause erosive wear (wear being proportional to the square of the particle mass).

This analysis has been superseded by the analysis described below.

Analysis Using Passive Strainers

ECCS equipment and core plugging concerns due to bypassed material were significant factors in the decision to discontinue the pursuit of active strainers. Accordingly, the downstream wear evaluation was bundled with the passive screen design and construction contract to allow trade off among all of the screen's functions (disallow debris grinding as an anti-plugging technique).

The passive strainer chosen was a relatively conventional square "disk" type strainer which has excellent debris removal and retention capacity. The supplier chose AREVA to do the downstream wear effects analysis. By that time, due to the active strainer delay, the chosen technical team had significant experience with WCAP-16406 wear analysis and Draft Revision 1 of WCAP-16406 was available and was used in the analysis. Reference 3.m.3 documents downstream wear effects for the passive strainers.

The inputs of the analysis are summarized below.

Wear Evaluation Debris Inputs

Debris	Type	Debris Input (ft^3)	Material Density (lbm/ft^3)	Packing Density (lbm/ft^3)	Large Particle (%)	Medium Particle (%)	Small Particle (%)
RMI							
	RMI	0.023475	170	N/A	100.0%	0.0%	0.0%
Coatings							
	Qualified	5	98	N/A	0.0%	0.0%	100.0%
	Qualified IOZ	1.5	457	N/A	0.0%	0.0%	100.0%
	Unqualified Alkyds	17.4	98	N/A	94.0%	4.5%	1.5%
Fibers							
	NUKON	725.7	159	2.4	100.0%	0.0%	0.0%
	NUKON unjacketed	2.3	159	2.4	100.0%	0.0%	0.0%
	Fiberglass	49.2	159	2.4	100.0%	0.0%	0.0%
	Fiberglass Unjacketed	0.5	159	2.4	100.0%	0.0%	0.0%
	Latent Fiber	0.319	94	N/A	100.0%	0.0%	0.0%
Particulate							
	CalSil	61	144	14.5	100.0%	0.0%	100.0%
	CalSil Unjacketed	50.8	144	14.5	100.0%	0.0%	100.0%
	Latent Particulate	1.005917	169	N/A	62.9%	0.0%	37.1%
Chemical							
	NaAlSi3O8	2364 mg/l	131.1	N/A	0.0%	0.0%	100.0%

Debris Mass Concentration by Size

Debris	Type	Large PPMw	Medium PPMw	Small PPMw
RMI				
	RMI	2.13	0	0
Coatings				
	Qualified	0	0	261.19
	Qualified IOZ	0	0	365.41
	Unqualified Alkyds	854.424	40.90	13.63
Fibers				
	NUKON	928.40	0	0
	NUKON unjacketed	2.94	0	0
	Fiberglass	62.94	0	0
	Fiberglass Unjacketed	0.64	0	0
	Latent Fiber	15.99	0	0
Particulate				
	CalSil	471.48	0	471.48
	CalSil Unjacketed	392.64	0	392.64
	Latent Particulate	57.00	0	33.62
Chemical				
	All Particulates	0	0	2364.98
	Total	2788.59	40.90	3902.96

Debris Decay Coefficient

The debris decay coefficient for particles that decay with respect to time is 0.07 based on Appendix K of WCAP-16406-P, Draft Revision 1.

Recirculation Fluid Properties

Recirculating Fluid Inputs	
Minimum Sump Mass (lbm):	1,876,000
Minimum Sump Volume (ft^3):	30,072
Maximum Temp (F):	264
Density at max temp (lbm/ft^3):	58.4

Mission Time

The PNP-required mission time following a postulated LOCA is 30 days for the HPSI system and the CSS.

The results of the Passive Strainer Downstream analysis are summarized below.

Valves, Orifices, Piping, and Heat Exchangers
Based on 82.0947 ft^3 (material volume which is the solid volume that contains no gaps for air) of mixed debris that could penetrate the sump screens at the start of the recirculation phase, the volumetric concentration of debris in the recirculation fluid is calculated to be 0.273% and the initial mass concentrations is calculated to be approximately 6,732.45 parts per million (ppm). Note: The initial mass concentration of approximately 6,732.45 ppm is a summation of the "Total" row in the Debris Mass Concentration by Size table above. This value is conservative since, due to limited information available, CalSil debris is assumed to fail as both large and small debris resulting in 200% of generated mass.

The limiting passageway was found to be larger than the largest assumed debris diameter. Therefore, blockage of the ECCS and CSS passageways due to debris-laden fluid is not a concern.

Erosive wear in the ECCS and CSS components due to debris-laden fluid has been analyzed. The PNP's ECCS and CSS heat exchanger tubing, instrument tubing, piping, nozzles, and orifices were found to have adequate thickness such that erosive wear due to debris-laden fluid will not compromise the design functions of these components for the required mission times. The HPSI valves (MO-3007, MO-3009, MO-3011, MO-3013, MO-3062, MO-3064, MO-3066, and MO-3068) were also found to have adequate thickness such that erosive wear due to debris laden fluid will not compromise their design functions for the required mission time.

Containment spray valves CV-3001 and CV-3002 were found to have adequate thickness such that erosive wear due to debris-laden fluid will not compromise the design functions of these components for fifteen days. This time frame is shorter than the required mission time of thirty days. However, the design modification package for the spray valve replacement evaluated the design features against wear. The critical dimension of the flow area is valve plugs gap between the plug surface and the integral pressure breakdown/flow stacked disc labyrinth assembly. The evaluation concluded that the stellite hardness and wear resistance is well-documented and is specifically addressed in the industry's methodology for the Evaluation of Downstream Sump Debris Effects in Support of GSI-191 (WCAP-16406-P). Stellite hardfacing is applied to the plug surface ensuring that the abrasive water in this accelerated flow region does not result in the degradation of valve plugs gap.

Pumps - Hydraulic Performance
The degradation of hydraulic performance of the ECCS and CSS pumps for the designated mission times is acceptable based on the methodology provided in WCAP-16406-P, Draft Rev. 1. Therefore, the pump capabilities credited in the FSAR and license bases analysis to ensure that fuel peak clad temperature (PCT) limits are not exceeded during the time and flow critical transient portion of a design basis LOCA.

The degradation of hydraulic performance of the ECCS and CSS pumps due to the debris laden fluid is expected to be minimal for the designated mission times for the following reasons:

- Testing performed in support of the upgrade (modifications) of the Davis-Besse high pressure injection pump showed that these running clearances can double or triple over a period of 30 days of operation with the constant debris loading calculated for a containment sump of the Davis-Besse containment building. The wear ring clearances in this pump were hard faced with stellite to provide good resistance to wear. Despite the increase in the running clearances within this pump, resulting in increased leakage across the wear rings, the loss of hydraulic efficiency was determined to be insignificant. This is based on the results of the testing and analysis reported in Davis-Besse that indicate "the loss of hydraulic performance due to worn wear rings that are within the normal replacement limit of two times the design clearance is insignificant."

- According to the WCAP-16406-P, Draft Revision 1, Worthington Pump International has performed testing on the effect of increased wearing clearances on the hydraulic performance of centrifugal pumps and found that even at 1000% (or 10 times) of design clearance, the loss of total dynamic head and efficiency is less than 5% of the values at the best-efficiency point

- According to WCAP-16406-P, Draft Revision 1, the effects on pump hydraulics due to debris laden fluid have been evaluated for slurries using concentrations of solids in the pumping fluid of up to 50% (by mass) in slurry evaluations. These concentrations are several orders of magnitude greater than the debris concentration calculated for ECCS and CSS pumps taking suction from the containment sumps following a postulated LOCA.

- NUREG/CR-2792 shows a 1% loss of hydraulic efficiency with 1% solid mass in the slurry. Considering the mass concentration of debris in the containment sump for a postulated large break LOCA is less than 1%, the conclusion can be drawn that the effect of debris on the hydraulic efficiency of the ECCS and CSS pumps is insignificant.

Since the hydraulic performance of the ECCS pumps are affected minimally by the debris-laden fluid, the pump capabilities credited in the FSAR and license bases analyses ensure that PCT limits are not exceeded during the time and flow critical transient portion of a design basis LOCA. The HPSI pump capability is also critical during the early injection phase of a design basis steam line rupture event, and for maintaining PCS inventory during a small break LOCA. However, by the time that containment sump recirculation is initiated during a design basis LOCA, both PCS pressure and core decay heat loads have both been substantially reduced. At that point, core decay heat removal requirements demand a few hundred gallons to make

up for boil-off (~400-500 gpm) and system spillage out of the break (~100 gpm), and system pressure has been reduced to near containment pressure. Since the required boil-off rate for the design base LOCA is ~400-500 gpm, significant degradation of the ECCS pumps hydraulic performance would have to occur before the required boil-off rate would not be met which is unlikely for the 30-day mission time for the ECCS pumps.

According to Section 7.2.4 of WCAP-16406-P, Draft Revision 1, "testing performed at Wyle Labs showed that running clearances of 0.010-inch on the diameter could be clogged when exposed to pump flow with 920 parts per million and higher debris concentration from failed containment coatings." This clogging lead to a packing type wear pattern on the rotating surfaces. The most pronounced wear occurred near the high pressure end of the clearance and the wear tapered off to zero near the middle of the wear surface. However, Section 7.2.4 of WCAP-16406-P, Draft Revision 1, further states that, "the debris packing (if present) provides more shaft bending support than a wide open wear ring gap of two times or more, and the parasitic flow across the ring would be reduced by the packing."

Pumps - Mechanical Shaft Seal

The evaluation of the PNP CSS and HPSI pump mechanical seals has concluded that during a post-LOCA condition, the seal flush system (including the seal coolers) will not be impeded by the debris-laden recirculating fluid; however, the design of these seals cannot be credited to perform their design function during the required mission time. In addition, the PNP maximum allowable ECCS leakage rate of 0.2 gpm precludes the ability to rely on the disaster bushing to sufficiently limit the seal leakage in the event of a seal failure.

The evaluation recommended that the existing Durametallic type BRO and PTO mechanical seals in the PNP's CSS and HPSI pumps be replaced with mechanical seals that are designed for applications with the concentration and sizes of debris that is assumed to be present in the PNP post-LOCA recirculating fluid, or have the mechanical seal vendor qualify the mechanical seals with a plant-specific debris mix. However, further evaluation (Reference 3.m.8) of the CSS pump mechanical seal has concluded that the BRO type seal does not need be replaced. The evaluation took the inputs from Flowserve which is the vendor for the CSS pumps. In summary, the amount of the debris that may enter the seal chamber will be minimal at most and will not impair the seal over a continuous operation of 30 days. One of the significant attributes of the conclusion relates to CSS pump seal flush system which is designated as Plan 23 by American Petroleum Institute (API). The Plan 23 system is essentially a closed loop. The system initially contains clean water, and the close bushing clearance will limit the amount of mixing between the process fluid and fluid in the seal chamber. Other attributes to the evaluation conclusion include that the flow path to enter the seal chamber is torturous, the low flow velocity in the heat exchanger tube would promote debris to settle in the heat exchanger and the kinematics of debris is likely to further

limit the potential of the amount and the size of the debris that could enter the seal chamber.

Westinghouse WCAP-16406-P, Draft Rev. 1 (pages 8-11 and 8-12), also recommends that cyclone separators should be removed due to concerns about plugging by fibrous debris.

Pump Vibration

Per WCAP-16406-P, Draft Rev. 1 (page 8-19), multistage pumps are required to be evaluated for pump vibration. The CSS pumps of PNP are single stage pumps and do not require pump vibration analysis.

The HPSI pumps at PNP are multistage pumps and are evaluated for pump vibration. Since limited information exists from PNP and the HPSI pump manufacturer related to the HPSI pump rotor dynamics, it is assumed that this information is not available (as an input assumption). Therefore, the WCAP-16406-P wear model is used for the pump vibration evaluation.

The wear rate model in Appendix F.8 of WCAP-16406-P, Draft Rev. 1, was used to assess the extent of wear on the wear components and its effect on HPSI pump vibration and hydraulic efficiency. It was determined in reference 3.m.3 that, following a LOCA, debris-induced wear on the pump wear components is not expected to exceed the two times the design running clearance limit specified for the each of the wear components during the mission time of 30 days. Therefore, per criterion in Figure 8.1-9 of WCAP-16406-P, Draft Rev. 1, the HPSI pump meets the requirements for vibration operability following a postulated LOCA and no further rotor dynamic analysis is required.

Bearings

Per the pump manuals and maintenance procedures, CSS and HPSI pump bearings are anti-friction oil lubricated ball bearings mounted in the pump frame. These bearings are equipped with various stages of protection against leakage of hot liquid from the shaft seals and will not be affected by the debris-laden fluid.

The downstream component evaluation applied the following conservatisms:

- Only the minimum volume of recirculating fluid is assumed to be available through the entire mission time.

- When evaluating the shutdown cooling heat exchanger tubing and the system piping, a constant wear rate is used (debris concentration is assumed to remain constant).

- Since the particulate debris failure size distribution was not known (except for dirt and dust); it was assumed that 100% of all PNP particulate debris fails as both large

and small. This essentially doubled the quantity of the particulate debris (except for dirt and dust).

- According to WCAP-16530-NP, Revision 0, the chemical debris, which agglomerates, cannot withstand shear forces. It is expected that turbulent flows of the fluid within the ECCS and CSS components, as well as interaction with the components themselves, will result in the disassociation of the chemical debris into very small particles, which will contribute to minimal wear of the components downstream of the strainer.

- The erosive wear rate of carbon steel is used to evaluate the erosive wear of the components downstream of the strainer. This is conservative since stainless steel is more resistant to wear than carbon steels.

Additional downstream effects calculation revisions to be completed
By letter OG-07-404, on September 7, 2007, Westinghouse submitted WCAP-16406-P, Revision 1, "Evaluation of Downstream Sump Debris Effects in Support of GSI-191" (PA-SEE-0195) to the NRC for review. WCAP-16406-P, Revision 1, contains some new sections and limitations based on NRC review of Revision 0.

Among the changes that affect PNP is the need to calculate pump wear using the Archard wear equation. This equation places all of the wear on the rotating components. It is also based on debris packing the close running clearances so that debris depletion does not reduce the wear rate. It is anticipated that the new Archard wear model will be problematical for PNP due to the extremely conservative debris concentration used in the existing AREVA analysis which was ameliorated by debris settlement repletion in the previous analysis.

It is anticipated that the decreased debris due to going beyond "baseline" methods and using the CFD for debris transport will help. Removing approximately 1500 ppm in chemical debris by using less conservative assumptions and approximately 864 ppm of particulate by not double counting CalSil as both 100% large and 100% small debris will help reduce the assumed wear rate.

It is further noted that if, the original NEI 04-07 assumption of a 1D ZOI for qualified paint is allowed, and Westinghouse Letter LTR-SEE-05-172 on non-qualified Alkyds particle size of quarter-inch chips is allowed, approximately 90% of the coatings or another 1500 ppm could be eliminated.

However, the current total concentration in the wear analysis is 6732 ppm and it might be necessary to credit even further reductions. In that case, it is anticipated that the bypass fraction would be measured during the upcoming holistic qualification tests and the actual measured bypass quantity would be input to the AREVA Archard wear analysis.

Revision 1 of WCAP-16406 also changed the analysis for sharp edged orifices. Since PNP has sharp edged measuring orifices in the ECCS recirculation path, these will also have to be reanalyzed during the above calculation revision. It is not expected that this will be a problem. However, it is not seen as debilitating to ECCS even if they do wear slightly more because they are all measuring orifices and any wear would reduce the accuracy late in the mission time when there are much larger margins available. Also, late in the transient, the boil-off rates are so low that these instruments will likely be off scale low.

NRC Request

- *Provide a summary of design or operational changes made as a result of downstream evaluations.*

ENO Response

HPSI Pump Seal Modification

Using Westinghouse issued WCAP-16406-P methodology to evaluate the downstream impact of sump bypass debris on the performance of the ECCS under post-LOCA conditions, it was identified that the HPSI pump mechanical seal system may not be suitable for long term operation under design basis post-LOCA debris conditions present following RAS. The HPSI pumps employed a cyclone separator in the seal flush path to remove particulate debris in order to extend the life of the pump seals. The HPSI pump mechanical seal cooling cyclone separator (DOXIE) was determined to be susceptible to fouling with the postulated fibrous material passing through the HPSI pump, potentially resulting in a loss of pump seal cooling water and premature seal failure. Also identified was the potential for fibrous debris to become lodged in the mechanical seal small linear loading springs, potentially resulting in non-uniform pressure applied to the seal faces resulting in premature seal failure. Therefore, in order to ensure that the HPSI pumps are capable of performing their safety related design function during their required mission time of 30 days under post-LOCA conditions, the HPSI pump mechanical seal system has been replaced with a mechanical seal system not susceptible to post-LOCA debris-induced failure.

The replaced seal and flush arrangement was configured as an API standard Plan 41. The pumps used Durametallic, Type PTO, cartridge seals and a Dorr-Oliver DOXIE cyclone separator in the seal flush line. The API Plan 41 configuration uses the pump's flow from the first stage cross-under. The HPSI pump flow first passed through a pressure breakdown orifice, then through the DOXIE cyclone separator which removes particulate debris from the flow stream. The flow stream then passed through a Borg-Warner helical coil seal cooler, cooled by component cooling water (CCW) to reduce the seal fluid temperature before injection into the Durametallic PTO cartridge seal chamber located on each HPSI pump end pump stuffing box. Seal injection was necessary to flush and cool the seals. Each Durametallic PTO seal used 14 small

linear coil springs to provide the uniform loading force on the seal faces. The springs are directly exposed to the seal cooling fluid flow.

The issues associated with the API plan 41 HPSI seal system relative to the fibrous debris are twofold:

1) Assuming that the fibrous debris, which is contained in the HPSI pump discharge fluid, passes through the DOXIE cyclone separator (which is not efficient at removing low density material) the debris would pass directly into the pump seal chamber (stuffing box) creating a potential for the fibrous debris to become lodged in the mechanical seal small linear loading springs, potentially resulting in non-uniform pressure to be applied to the seal faces, and resulting in premature seal failure, and

2) Cyclone separators have been identified to be prone to fouling under fibrous debris loads, therefore creating a potential for the DOXIE cyclone separator to partially or fully plug, resulting in loss of adequate seal cooling water flow, again potentially resulting in premature seal failure.

To resolve the above issues, the API Plan 41 configuration has been replaced with an API Plan 23 seal cooling configuration. The Durametallic PTO mechanical pump seals have been replaced with Chesterton Type 180PR Spiral Trac seals that are more suitable for long term operation under design basis post-LOCA conditions.

An API Plan 23 configuration does not use pump flow for seal flushing or cooling. Instead, the API Plan 23 recirculates a clean fluid volume contained in the seal system (including the seal cavity, seal coolers and seal connection lines). For the API Plan 23 HPSI pump configuration the seal system volume is filled and vented with clean water from the SIRW Tank. Each seal circulates seal water in the essentially closed loop from the seal cavity, through the shell side of a shell and tube seal cooler dedicated to that seal to remove the approximate 1702 Btu/hr seal face friction heat load, and return the cooled seal water to the seal cavity.

The motive force for circulating the seal water in this closed loop is a pumping ring, integral to the Chesterton Type 180PR Spiral Trac cartridge seal design selected for this application, which develops a differential head of approximately ten feet of water and a flow rate of approximately two gpm to cool the seals. The seal water is cooled with CCW on the tube side of the cooler.

In an API plan 23 configuration, the only potential for debris to enter the seal chamber is via a minimal amount of fluid exchange, due to normal fluid thermal expansion and contraction in the seal cavity. The seal cavity is contained in the pump stuffing box which is separated from the HPSI pump first and third suction stages by pressure reduction bushings. These bushings have very small diametrical clearances

(30-40 mils for the throat bushing and 13 to 15 mils for the throttle bushing) between the shaft bushing and the stuffing box casing bushings.

The flush water inventory is essentially contained, as there are no differential pressure forces from the stuffing box into the seal cavity that would cause any significant amount of fluid to pass from the pump impeller side of the throat/throttle bushings to the stuffing boxes under normal seal operation. Therefore, the amount of fluid mixing across these bushing clearances is expected to be minimal.

The Chesterton Type 180PR Spiral Trac seals also use multiple seal loading springs, similar to the existing Durametallic design, however the Chesterton seal loading springs are located outside of the seal cavity and pump stuffing box and are therefore not exposed to any water volume. This design results in the seal loading springs being immune to the presence of debris, including fiber, in the pumps fluid. In addition, the Chesterton design uses a Spiral Trac feature which transports debris away from the seal cavity face in the stuffing box to create a lower debris concentration in the stuffing box than could be present without this feature. By creating a lower debris concentration at the seal cavity boundary, this design reduces the potential to introduce debris in the seal cavity volume due to the exchange of fluid from thermal expansion and contraction.

A design modification installed during the 2007 refueling outage removed the HPSI pump Durametallic PTO cartridge seals along with the existing API Plan 41 seal flush system consisting of cooling line flow restricting orifices, DOXIE cyclone separators, Borg-Warner helical coolers, HPSI pump stuffing box jacket water coolers, and associated piping between the HPSI pump first stage cross-under and the stuffing boxes, along with CCW piping to and from the existing seal coolers. The associated first stage cross-under and unused CCW connections have been capped as they are no longer used as part of the API Plan 23 seal flush system configuration.

Each new mechanical seal (two seals per HPSI pump) is provided with an external seal cooler, cooled by CCW.

References

3.m.1 WCAP-16406-P, "Evaluation of Downstream Sump Debris Effects in Support of GSI-191," including Revision 1, August 2007

3.m.2 EA- MOD-2005-04-09, "GSI-191 GL-2004-02 Downstream Effects," Revision 0, August 3, 2005

3.m.3 EA-EC496-15, "Palisades GSI-191 Downstream Effects Evaluation of ECCS Components," Revision 0, August 10, 2007

3.m.4 Los Alamos Reports LA-UR-04-5416, "Screen Penetration Test Report," November 2004

3.m.5 Los Alamos Report, LA-UR-01-6640, "Development of Debris-Generation Quantities in Support of the Parametric Evaluation," November 2001

3.m.6 EA-EC8349-03, Sargent & Lundy Document No. 2007-03464, "Post LOCA Chemical Effects Analysis in Support of GSI-191," May 17, 2007

3.m.7 NMC letter to NRC "Nuclear Management Company Response to Generic Letter 2004-02, "Potential Impact of Debris Blockage on Emergency Recirculation During Design Basis Accidents at Pressurized-Water Reactors," for Palisades Nuclear Plant," August 25, 2005

3.m.8 Sargent and Lundy document SL-Pal-07-0013, "GSI-191 HPSI/CS Pump Seal assemblies Evaluation," March 4, 2007

3.n. Downstream Effects - Fuel and Vessel

NRC Request

The objective of the downstream effects, fuel and vessel section is to evaluate the effects that debris carried downstream of the containment sump screen and into the reactor vessel has on core cooling.

- *Show that the in-vessel effects evaluation is consistent with, or bounded by, the industry generic guidance (WCAP-16793), as modified by NRC staff comments on that document. Briefly summarize the application of the methods. Indicate where the WCAP methods were not used or exceptions were taken, and summarize the evaluation of those areas.*

ENO Response

A two-phase approach was used to evaluate the GSI-191 concerns on the down stream fuel and vessel effects. The evaluation addresses the susceptibility of the reactor core to blockage by debris and the ability of the ECCS to provide adequate core cooling in the event of blockage by debris. The two phases are:

1. Initial parametric evaluation of core blockage susceptibility.
2. Detailed evaluation of the ability of the ECCS to cool the core given a debris source term from the containment sump strainer vendor.

Phase 1 evaluation has been completed. AREVA Siemens Company, which is the vendor of PNP fuel, was contracted to perform the evaluation. This scoping evaluation was performed before the sump strainer design was completed. It employed the guidance provided to the industry in WCAP-16406-P (Reference 3.n.1) for the framework.

Phase 2 evaluation is to be performed in accordance with the methodology given in WCAP-16793 (Reference 3.n.2) as modified by NRC comments on that document. The results of the evaluation will be included in a followup supplemental response. Any deviation of the WCAP-16793 will be noted in the submittal.

<u>References</u>

3.n.1 WCAP-16406-P, "Evaluation of Downstream Sump Debris Effects in Support of GSI-91," Revision 1, August 2007

3.n.2 WCAP-16793-NP, "Evaluation of Long-Term Cooling Considering Particulate and Chemical Debris in the Recirculation Fluid," Revision 0, May 2007

3.o. Chemical Effects

NRC Request

The objective of the chemical effects section is to evaluate the effect that chemical precipitates have on head loss and core cooling.

- *Provide a summary of evaluation results that show that chemical precipitates formed in the post-LOCA containment environment, either by themselves or combined with debris, do not deposit at the sump screen to the extent that an unacceptable head loss results, or deposit downstream of the sump screen to the extent that long-term core cooling is unacceptably impeded.*
- *Content guidance for chemical effects is provided in Enclosure 3 to a letter from the NRC to NEI dated September 27, 2007 (ADAMS Accession No. ML0726007425).*

ENO Response

A complete response of the chemical effects is to be submitted after the results of the integrated chemical effects testing are available. In the meantime, a one foot head loss is assumed for the chemical effects. Measures have been taken to reduce the potential of chemical effects of the sump fluid, including the replacement of sump buffering agent and enhanced programmatic control of insulation material used inside the containment such as promoting the replacement of aluminum jacketing with stainless jacketing.

In Information Notice (IN) 2005-26, "Results of Chemical Effects Head Loss Tests in a Simulated PWR Sump Pool Environment," the NRC informed licensees that research results indicate that a simulated sump pool environment containing phosphate and dissolved calcium can rapidly produce a calcium phosphate precipitate that, if transported to a fiber bed covered screen, produces significant head loss. IN 2005-26 was applicable to PNP because TSP was used as the buffering agent and there are calcium sources within containment including containment, concrete and two forms of calcium silicate: 1) pipe insulation and 2) Marinite® fiber board. In response to IN 2005-26, ENO replaced the TSP buffering agent with STB during the 2007 refueling outage. The predicted post-LOCA sump pH value remains to be between 7 and 8, whereas the amount of chemical precipitation would be less with the STB case. To minimize the post-LOCA sump fluid chemical precipitation, the amount of STB inside containment is intended to be maintained at the practically lowest level. A more detailed design basis for the STB was included in ENO's License Amendment request for the buffering agent change, dated June 29, 2007 (ADAMS Accession No. ML071830385).

In determining the chemical precipitation of the sump fluid, the spread sheet based on WCAP-16530-NP (Reference 3.o.1) was used. A parametric study (Reference 3.o.2) of the chemical precipitation was performed for the variables of pH values, debris mix due to different postulated break locations and the fractions of dissolved aluminum released from the reactor cavity. Noting the purpose of the parametric study of the fraction of the

reactor cavity aluminum release was to evaluate the degree of conservatism in the analysis. The physical configuration of the lower half of the reactor cavity represents a plenum with no direct flow path to the sump. There is a high likelihood that some dissolved aluminum and aluminum precipitation will be trapped in the reactor cavity. Nevertheless, no aluminum reduction due to the plenum configuration is to be considered in the chemical effects of the strainer head loss. The results of the bounding case chemical precipitation analysis are 1024 kg of sodium aluminum silicate and 3343 kg of aluminum oxy-hydroxide. This analysis conservatively assumed that the ECCS and the CSS are operated for 30 days. The model still predicts a significant loading of chemical precipitates with the STB buffer, however, the predicted species are aluminum-based rather than the calcium phosphate precipitates generated with TSP buffer. Calcium phosphate forms very early in the event because of the rapid dissolution of calcium. Aluminum-based precipitates are expected to form later in the event, when there is greater NPSH margin available to accommodate the debris. That is, there is less demand on the ECCS pumps at the time that the aluminum based precipitates form. For example, NRC sample calculations (ADAMS Accession No. ML061510478) indicate the NPSH margin increases by more than 20 feet during the time from the initiation of recirculation to 24 hours after a large-break LOCA. The NRC staff finds that changing buffer materials from TSP to STB at PNP will result in an improved situation from a chemical effects standpoint (Reference 3.o.3).

Silica inhibition of aluminum corrosion and calcium dissolution was not credited in the preceding described chemical precipitation analysis. ENO plans to adopt the silica inhibition model of WCAP-16785-NP (Reference 3.o.4) for determining the aluminum precipitation and incorporated the results into the integrated chemical test. The use of the silica inhibition is based on PWROG research results (Reference 3.o.4) and is consistent with the industry approach of removing compound conservatism in the GSI-191 resolutions.

Less conservative Aluminum Chemical Effects analysis is presently under way. This analysis will take credit for stainless steel covering shielding the aluminum foil from containment spray water which was an original plant design feature that had not been used in the hydrogen generation analysis that formed the basis for the previously assumed aluminum quantities. It will also take credit for a reduced aluminum area when the 0.65 mil foils are calculated to have been eaten away. The new aluminum analysis will also take credit for silicate reducing the rate of aluminum dissolution (per WCAP-16785-NP).

References

3.o.1 WCAP-16530-NP, "Evaluation of Post Accident Chemical Effects in Containment Sump Fluids to Support GSI-191," Revision 0, February 2006

3.o.2 EA-EC8349-02, "Post LOCA Chemical Effects Analysis in Support of GSI-191," Revision 0, June 3, 2007

3.o.3 NRC letter to ENO "Palisades Nuclear Plant – Issuance of Amendment RE: Replacement of Containment Sump Buffer (TAC no. MD5893)," October 2, 2007

3.o.4 WCAP-16785-NP, "Evaluation of Additional Inputs to the WCAP-16530-NP Chemical Model," Revision 0

3.p. Licensing Basis

NRC Request

The objective of the licensing basis section is to provide information regarding any changes to the plant licensing basis due to the sump evaluation or plant modifications.

Provide the information requested in GL 04-02 Requested Information Item 2(e) regarding changes to the plant licensing basis. The effective date for changes to the licensing basis should be specified. This date should correspond to that specified in the 10 CFR 50.59 evaluation for the change to the licensing basis.

ENO Response

ENO does not plan to request any additional license changes in association with the compliance to the Generic Letter. Two license changes for the containment sump passive strainer and change to the containment buffering agent have been requested and approved by the NRC. These two changes and modifications to the containment spray isolation valves were made to ensure compliance with the regulatory requirements listed in the generic letter and are summarized below.

<u>Containment Sump Passive Strainer Assembly Modification</u>
On October 4, 2007, the NRC approved and issued Amendment No. 228 (ML072550057) to the Renewed Facility Operating License changing TS Surveillance Requirement 3.5.2.9 to reflect the configuration of the containment recirculation sump strainer modification. The resultant modification is described in section 3.j of this enclosure.

TS Bases Section B 3.5.2, "ECCS - Operating," incorporating the strainer modification was revised under 10 CFR 50.59, and became effective on October 8, 2007.

An Updated Final Safety Analysis Report (UFSAR) change incorporating the strainer modification has been prepared under 10 CFR 50.59. In accordance with 10 CFR 50.71(e), the UFSAR change will be completed by April 21, 2008 (six months following startup from the refueling outage when the modification was installed).

<u>Containment Sump Buffering Agent Modification</u>
On October 2, 2007, the NRC approved and issued Amendment No. 227 (ML072530735) to the Renewed Facility Operating License changing TS Limiting Condition for Operation 3.5.5 and Surveillance Requirements 3.5.5.1 and 3.5.5.2 to reflect the change of the containment buffering agent from TSP to STB.

TS Bases Sections B 3.5.4, "SIRWT," B 3.5.5, "STB," and B 3.6.6, "Containment Cooling Systems," incorporating the change of the containment sump buffering agent from TSP to STB was revised under 10 CFR 50.59, and became effective on October 8, 2007.

An UFSAR change incorporating the change of the containment buffering agent from TSP to STB has been prepared under 10 CFR 50.59. In accordance with 10 CFR 50.71(e), the UFSAR change will be completed by April 21, 2008 (six months following startup from the refueling outage when the STB was placed in containment and the TSP removed).

Containment Spray Isolation Valve Modification

TS Bases Sections B 3.5.2, "ECCS – Operating," and B 3.6.6, "Containment Cooling Systems," were revised under 10 CFR 50.59, and became effective on October 8, 2007. The bases revision reflects the modification that throttles the containment spray flow during the containment sump recirculation mode of operation to ensure adequate CSS pump NPSH.

An UFSAR change incorporating the modification of the containment spray valves has been prepared under 10 CFR 50.59. In accordance with 10 CFR 50.71(e), the UFSAR change will be completed by April 21, 2008 (six months following startup from the refueling outage when the modification was installed).

ENCLOSURE 2

ATTACHMENT DRAWINGS

FOR

SUPPLEMENTAL RESPONSE

TO

NRC GENERIC LETTER 2004-02

"Potential Impact of Debris Blockage on Emergency Recirculation during Design Basis Accidents at Pressurized-Water Reactors"

List of Attachments

Attachment 1	**Schematic of Containment Sump Entrance Pathways Prior to Modification**
Attachment 2	**Two pages:** **Schematic of Containment Sump Entrance Pathways After Modification** **Vendor Drawing VEN-M802, sheet 2, revision 0, Sure-Flow Strainer General Arrangement**
Attachment 3	**Drawing M-203, sheet A, revision 7, System Diagram Safety Injection, Containment Spray and Shutdown Cooling System**
Attachment 4	**Drawing M-204, sheet A, revision 8, System Diagram Safety Injection, Containment Spray and Shutdown Cooling System**

Attachment 1

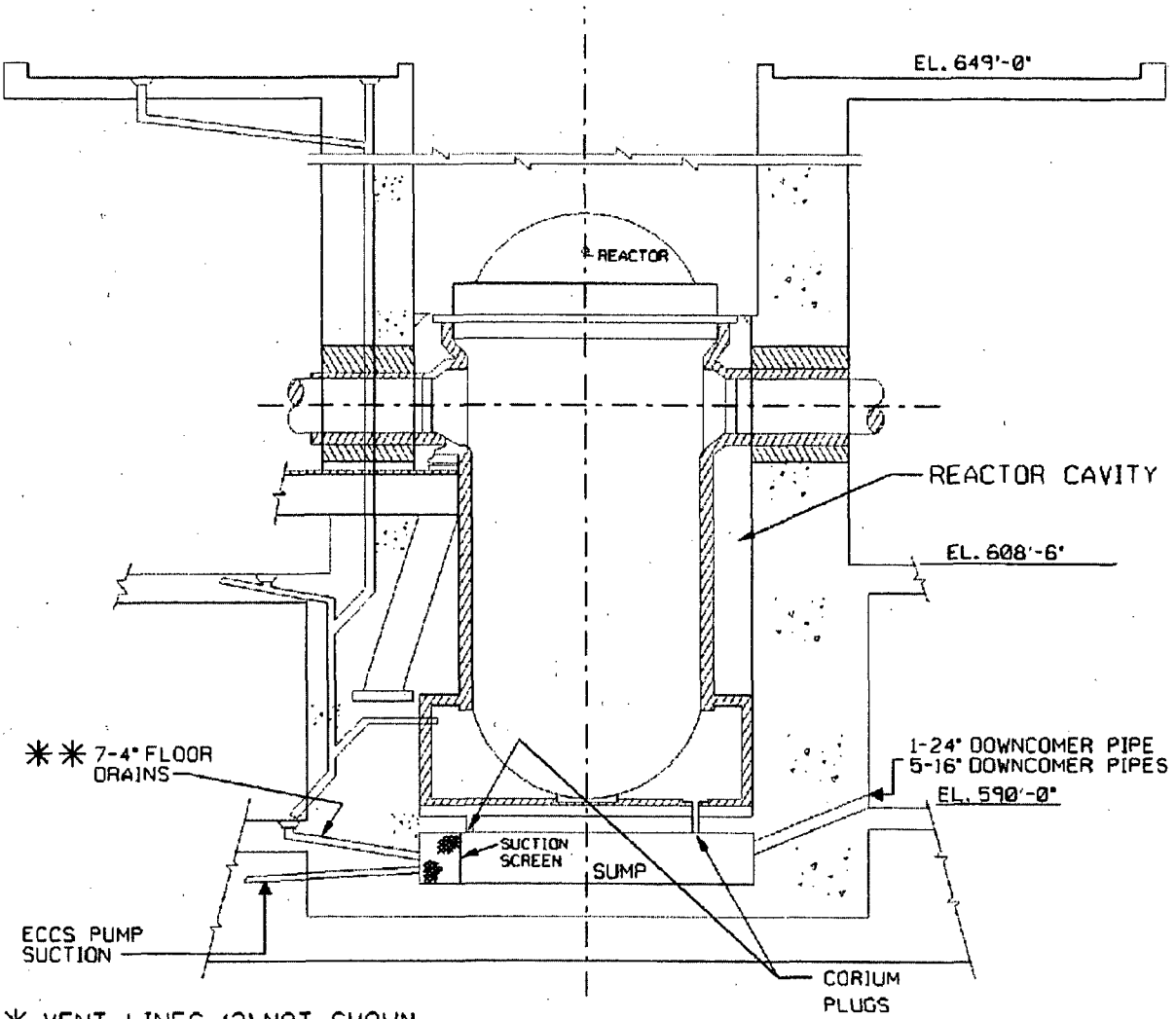

✳ VENT LINES (2) NOT SHOWN

✳✳ FLOOR DRAINS DISCHARGE INTO SUMP OUTSIDE THE SUCTION SCREEN AREAS

SCHEMATIC OF CONTAINMENT
SUMP ENTRANCE PATHWAYS
(NOT TO SCALE)

Attachment 2

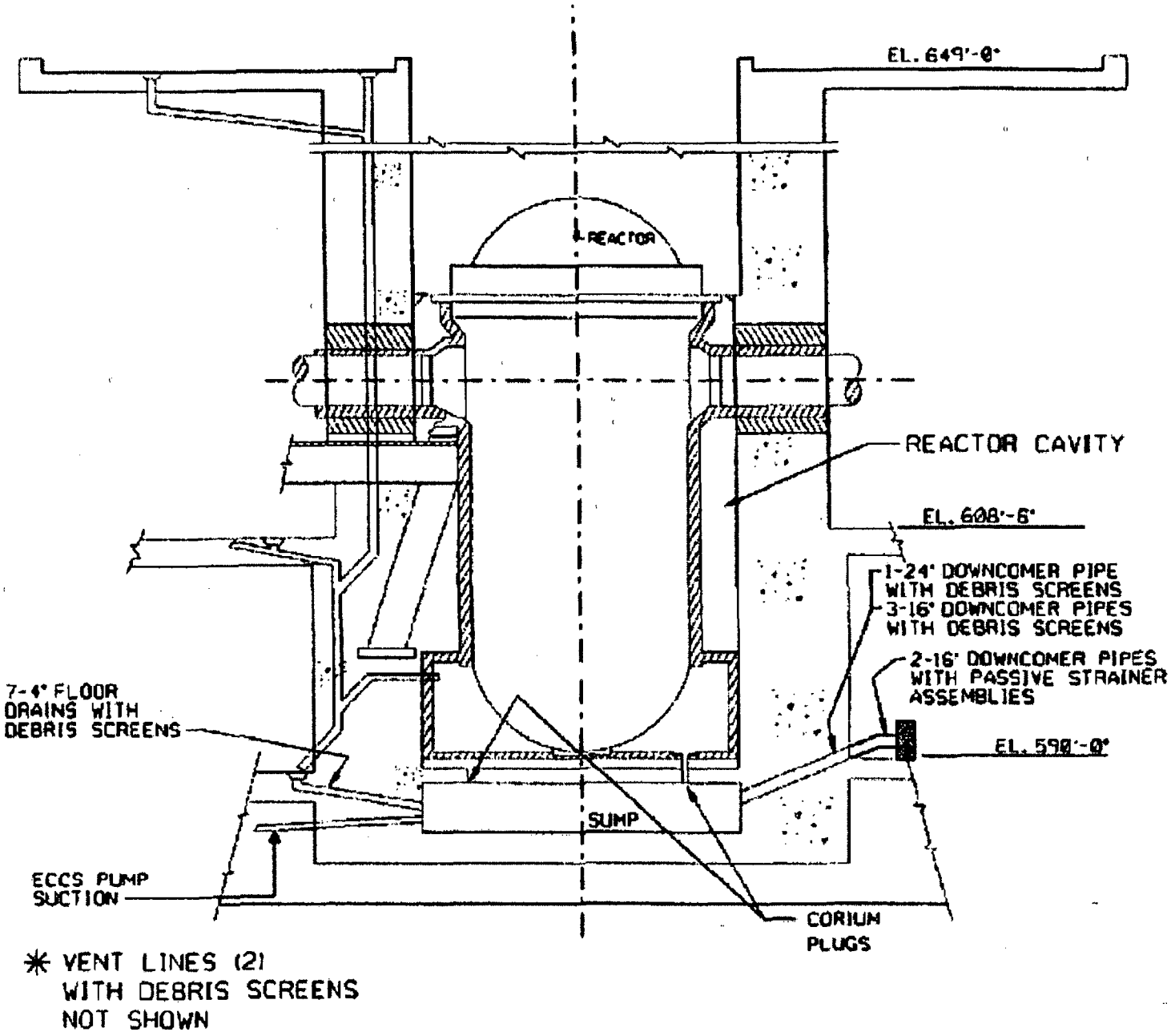

SCHEMATIC OF CONTAINMENT
SUMP ENTRANCE PATHWAYS
AFTER MODIFICATION
(NOT TO SCALE)

Attachment 2

General Arrangement Drawing Showing Location of Strainer Assemblies

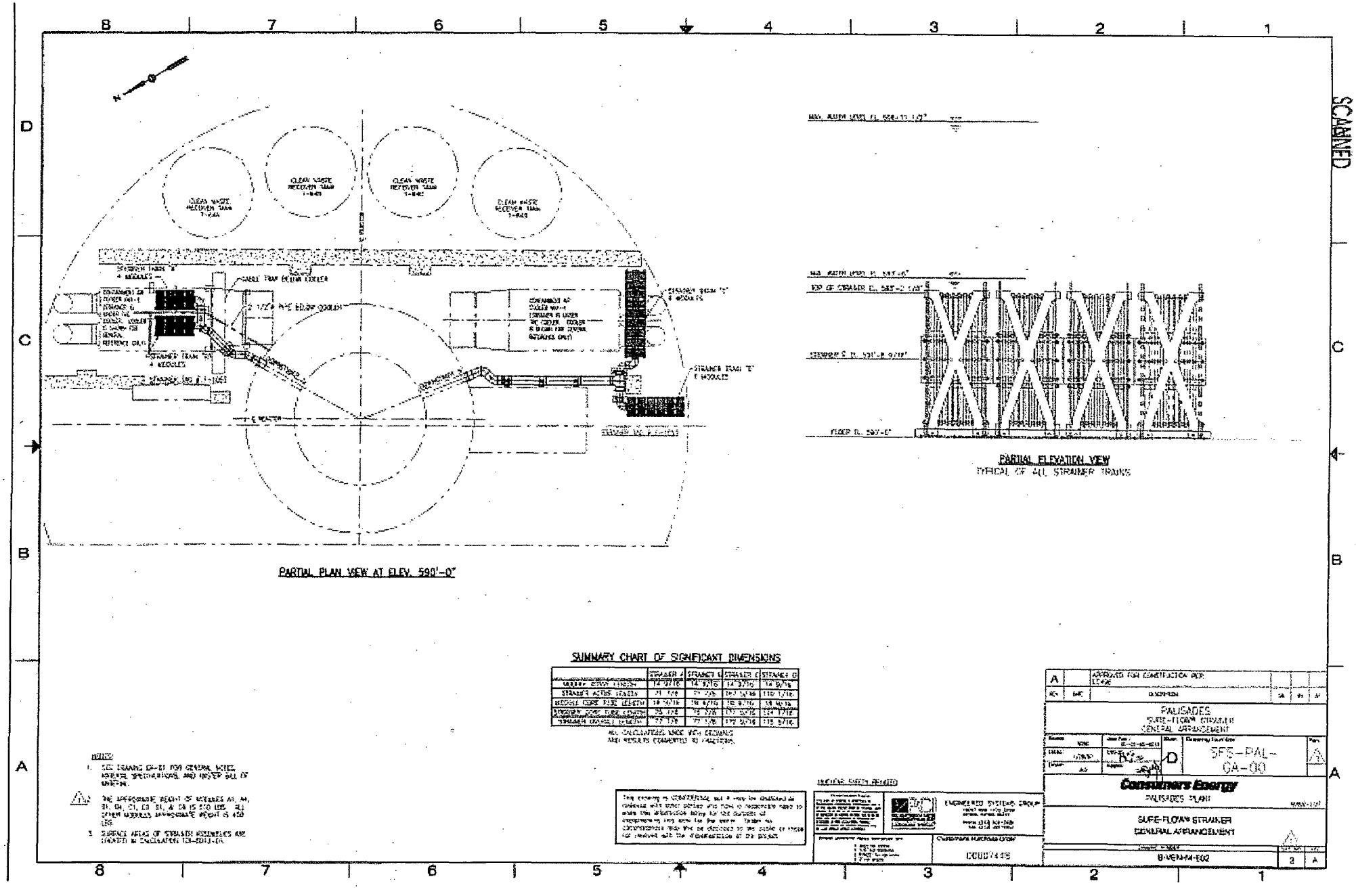

Attachment 3

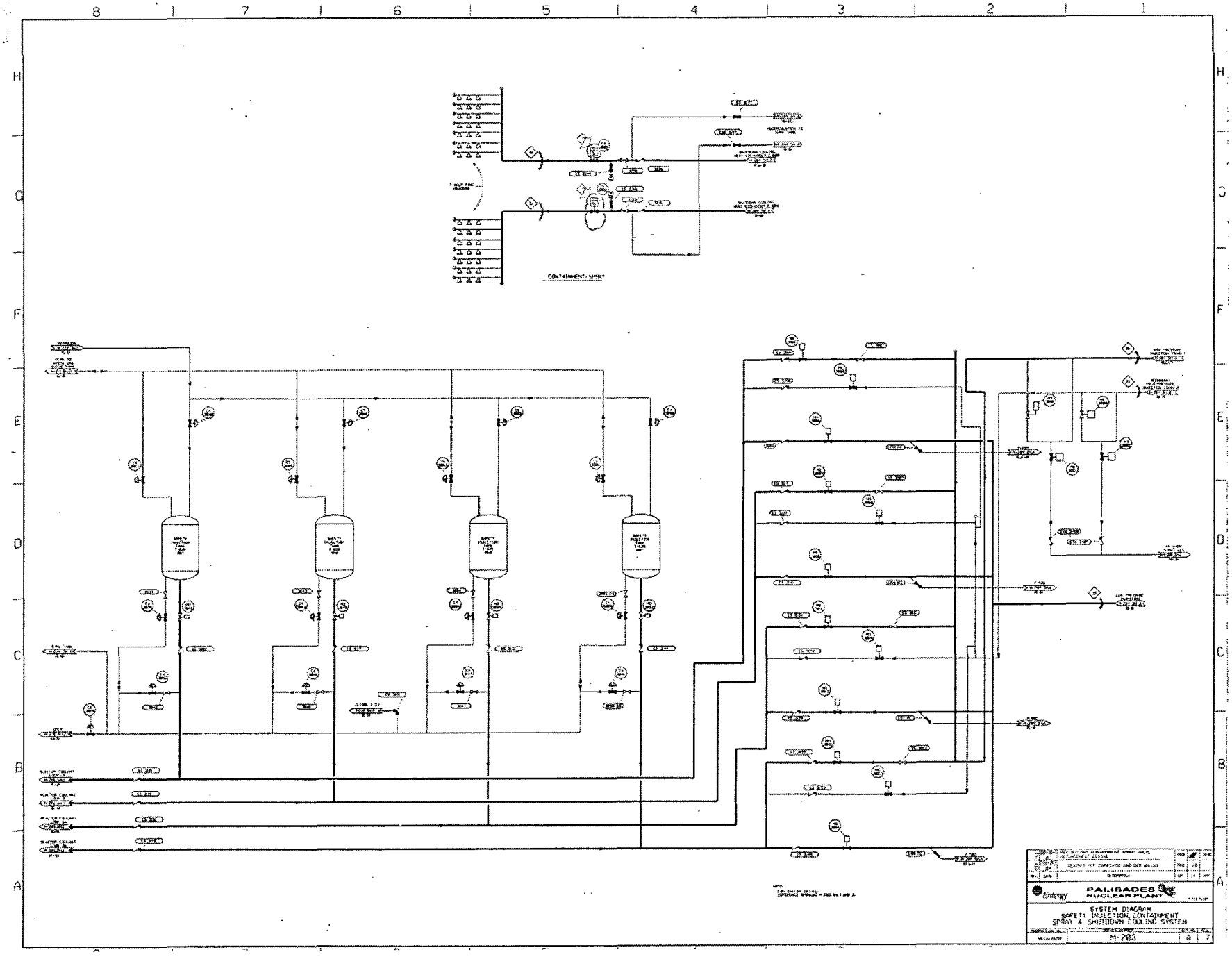

Attachment 4

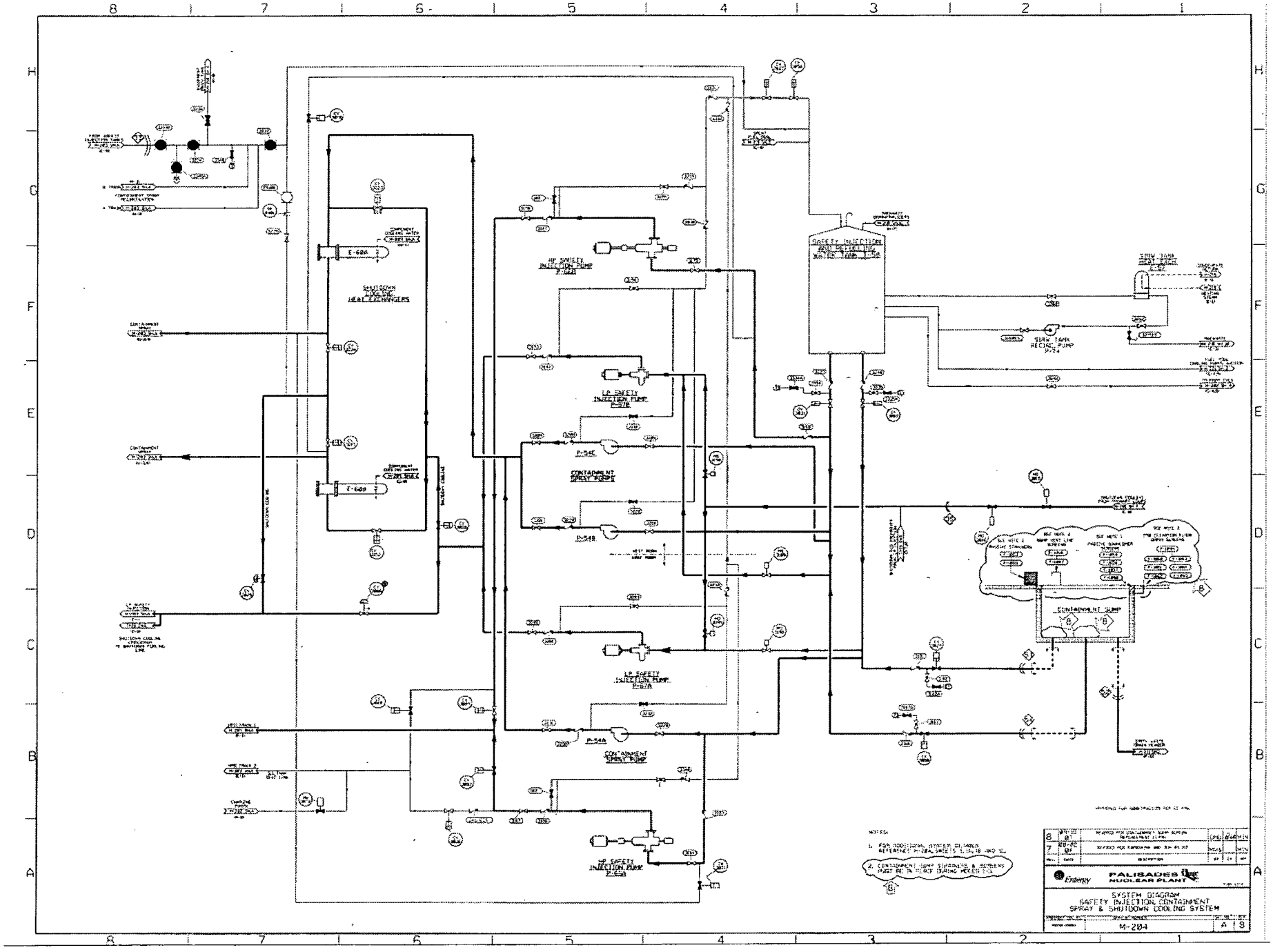

THIS PAGE IS AN OVERSIZED DRAWING OR FIGURE,

THAT CAN BE VIEWED AT THE RECORD TITLED:

"SYSTEM DIAGRAM SAFETY INJECTION, CONTAINMENT SPRAY & SHUTDOWN COOLING SYSTEM"

Drawing Number: M-203, SHT. NO. A REV. 7

WITHIN THIS PACKAGE... OR BY SEARCHING USING THE DOCUMENT/REPORT NO.

D-01

THIS PAGE IS AN OVERSIZED DRAWING OR FIGURE,

THAT CAN BE VIEWED AT THE RECORD TITLED:

"SYSTEM DIAGRAM SAFETY INJECTION, CONTAINMENT SPRAY & SHUTDOWN COOLING SYSTEM"

Drawing Number: M-204, SHT. NO. A REV. 8

WITHIN THIS PACKAGE... OR BY SEARCHING USING THE DOCUMENT/REPORT NO.

D-02

THIS PAGE IS AN OVERSIZED DRAWING OR FIGURE,

THAT CAN BE VIEWED AT THE RECORD TITLED: "SURE-FLOW STRAINER GENERAL ARRANGEMENT" Drawing No. VEN- M802, SHT. NO. 2 REV. 0

WITHIN THIS PACKAGE... OR BY SEARCHING USING THE DOCUMENT/REPORT NO.

D-03X