Exelon Generation Company, LLC
Byron Station
4450 North German Church Road
Byron, IL 61010-9794

www.exeloncorp.com

Exelon Nuclear

January 11, 2006

LTR: BYRON 2006-0009
File: 1.10.0101

United States Nuclear Regulatory Commission
Attention: Document Control Desk
Washington, DC 20555-0001

Byron Station, Unit 2
Facility Operating License No. NPF-66
NRC Docket No. STN 50-455

Subject: Submittal of Analytical Evaluation of Pressurizer Seismic Restraint Lug Indications

In accordance with the American Society of Mechanical Engineers (ASME) Boiler and Pressure Vessel Code, 1989 Edition, no addenda, Section XI, IWB-3134(b), Exelon Generation Company, LLC, is submitting an analytical evaluation of indications identified on the Byron Nuclear Power Station, Unit 2 pressurizer (PZR) vessel seismic restraint lug.

As a result of liquid penetrant testing (PT) examinations conducted during the recently concluded refueling outage at Byron, Unit 2, ASME Section XI reportable indications were identified in a seismic restraint lug weld of the PZR vessel. The seismic restraint lug weld is an Examination Category B-K, Item Number B10.10 weld, per ASME Section XI, as modified by Code Case N-509. The PT examination was performed in accordance with ASME Section XI procedures. The inspection of lug PSL-1 revealed two recordable linear indications with the longer of the two exceeding the acceptance standard in Table IWB 3510-3. Analytical evaluation of the reported indications was conducted in accordance with IWB-3600, as allowed by IWB-3132.4. In addition, an ultrasonic examination was performed on the pressurizer base metal to assure the assumptions of the analytical evaluation were bounding.

Due to the rejectable indication identified in the PZR seismic restraint lug, an additional examination was performed in accordance with ASME Section XI, IWB-2430(a). The additional scope included a magnetic particle examination on the PZR support skirt weld. No recordable indications were identified with this examination.

Based on the analytical evaluation provided in the attachment, it is concluded that the indications found in the Byron Unit 2 seismic restraint lug weld of the PZR vessel, during the most recently concluded refueling outage, are acceptable by the flaw acceptance criteria of IWB-3600 of the ASME Section XI Code.

Should you have any questions concerning these reports, please contact William Grundmann, Regulatory Assurance Manager, at (815) 406-2800.

Respectfully,

David Hoots
Plant Manager
Byron Nuclear Generating Station

Attachment: Byron Unit 2 Flaw Evaluation at the Pressurizer Seismic Lug (PSL-1) Region

DMH/JL/rah

ATTACHMENT

Byron Unit 2 Flaw Evaluation at the Pressurizer Seismic Lug (PSL-1) Region

LTR-PAFM-05-78

BYRON UNIT 2 FLAW EVALUATION AT THE PRESSURIZER SEISMIC LUG (PSL-1) REGION

Revision 1
December 2005

C. K. Ng
W. H. Bamford

Verified by: _____

S. Jirawongkraisorn
Piping Analysis and Fracture Mechanics

Approved by: _____

S. Swamy
Manager, Piping Analysis and Fracture Mechanics

Westinghouse Electric Company LLC
P.O. Box 355
Pittsburgh, PA 15230-0355

© 2005 Westinghouse Electric Company LLC
All Rights Reserved

1.0 INTRODUCTION

During the B2R12 refueling outage, the Byron Unit 2 ISI program scheduled the inspection of the Pressurizer Integrally welded attachment seismic lugs PSL-1 through PSL-4. The geometry of the pressurizer and the seismic lugs are shown in Figures 1-1 and 1-2 respectively.

On September 30, 2005, Westinghouse/WesDyne ISI personnel performed a surface examination on these components. Liquid penetrant inspections were performed on the accessible portions of three seismic lugs to the pressurizer. The inspection of PSL-1 revealed two recordable linear indications near the toe of the weld closest to the pressurizer vessel. The lengths of the two linear indications detected are 0.2 inch and 0.8 inch and are separated by 0.9 inch [1]. The depths of the linear indications are not available without performing further NDE. Based on the rules of IWA-3400-1 [2], these two linear indications need not be grouped into a single indication, since the distance between the linear indications was greater than 0.8 inch. Using the acceptance standard in Table IWB 3510-3, the 0.2 inch linear surface indication was shown to be acceptable. However, for the 0.8 inch linear indication, the measured length (0.8 inch) divided by the nominal pressurizer vessel thickness (4.0 inch) [3] was calculated to be 20% and exceeded the acceptance standard of 10.4% [2].

A review of the NDE record indicates that this is the first time a flaw has been detected in this region during an in-service inspection. The original Code acceptance inspection was performed using magnetic particle inspection technology. The first inservice inspection of this region was therefore performed in September 2005 during the refueling outage.

The indications were located on the outside surface of the pressurizer vessel and therefore not exposed to the primary water environment. There is no known mechanism that can cause crack initiation in the affected region since the maximum design fatigue usage factor calculated for the seismic lug region is 0.37 [4] compared to the ASME Code allowable value of 1.0. Furthermore, there is no known occurrence of any earthquake events in Byron Unit 2 and therefore there is no cumulative fatigue usage factor as of to-date because the seismic lugs are active only under earthquake and pipe rupture loadings.

The seismic lugs were welded to the outside diameter of the pressurizer with two longitudinal full penetration welds for each of the four lugs. The lugs were installed on the pressurizer in 1975. A review was made of the appropriate drawings and records, and the sequence of installation was established, and is reported here.

The first step in the installation process was a magnetic particle and ultrasonic inspection of the four areas of the shell where the lugs were to be welded on the pressurizer. A preheat of at least 250°F was maintained for the entire welding process. The pressurizer was on its side, and the lugs were each tack welded in place. After verifying that they were properly positioned relative to the drawing, the full penetration welds were completed on each lateral side of the lugs. Back-gouging and magnetic particle testing

was performed during the welding sequence, and at the end, a magnetic particle exam was performed on both full penetration welds.

At this point, fillet welds were added to the all sides of the lugs (with the pressurizer on its side), and then the lugs were post-weld heat treated for a minimum of 3 hours at 1125°F +/- 25°F. This information was obtained from a variety of sources, including a typical shop traveler and weld Quality Control (QC) records for this time frame. There is no information available on the shop traveler concerning any fillet welds on the top or bottom surface of the seismic lug weld, although the 250°F weld preheat, materials, and dates of welding are identified on the weld QC records. The final magnetic particle examination of the lug welds was performed after this post-weld heat treatment of the subassembly. The completed pressurizer was then shipped to the site on May 19, 1977.

Based on a review of the seismic lug welding sequence described above and the location and orientation of the detected indications in the fillet weld, the indications are believed to be fabrication defects in a portion of the fillet weld that is not required for any pressurizer structural integrity purposes. This is because the original Code acceptance inspection on the full penetration welds was achieved using magnetic particle inspection technology. The circumferential fabrication defects are not likely to be located in the pressure boundary regions of the pressurizer shell and not likely to extend any further beyond the fillet weld into the full penetration weld. The seismic lugs and the pressurizer vessel are both fabricated with low Alloy steel (SA-533 Grade A Class 1 and Class 2) which is not susceptible to stress corrosion cracking under any circumstances, including the primary water environment. Therefore there is no known evidence that the indications are service induced, but rather it is a lack of fusion between the weld beads.

The objective of this letter report is to document the technical basis and results of the flaw evaluations performed using the evaluation guidelines and acceptance criteria from IWB 3600 of the ASME Code Section XI [2] to demonstrate the acceptability of the 0.8 inch long linear indication. It should be noted again that the indications detected are fabrication imperfections and are not service induced. Nevertheless, these indications are conservatively evaluated in accordance with the ASME Code Section XI flaw evaluation guidelines. Flaw evaluation charts have been developed for both postulated outside circumferential and axial surface flaws, to determine the acceptability of the as-found indications in the vicinity of the weld toe for seismic lug PSL-1. The first evaluation deals with the indications as they were found, while the second deals with the similar indications postulated to exist along the side of the seismic lug. There is no evidence that such indications exist, but there are some regions along the side of the seismic lug which could not be examined due to obstructions. A third case was completed for a flaw postulated along the top surface of the seismic lug propagating through the lug itself, which could result in severing of the lug.

It should be noted that the flaw evaluation charts developed in this letter report are applicable to both Byron and Braidwood Units 1 and 2. However, the flaw evaluation results for the detected indications are applicable to Byron Unit 2 only. The entire Revision 0 of this report has been reclassified as Non-Proprietary Class 3 in this revision.

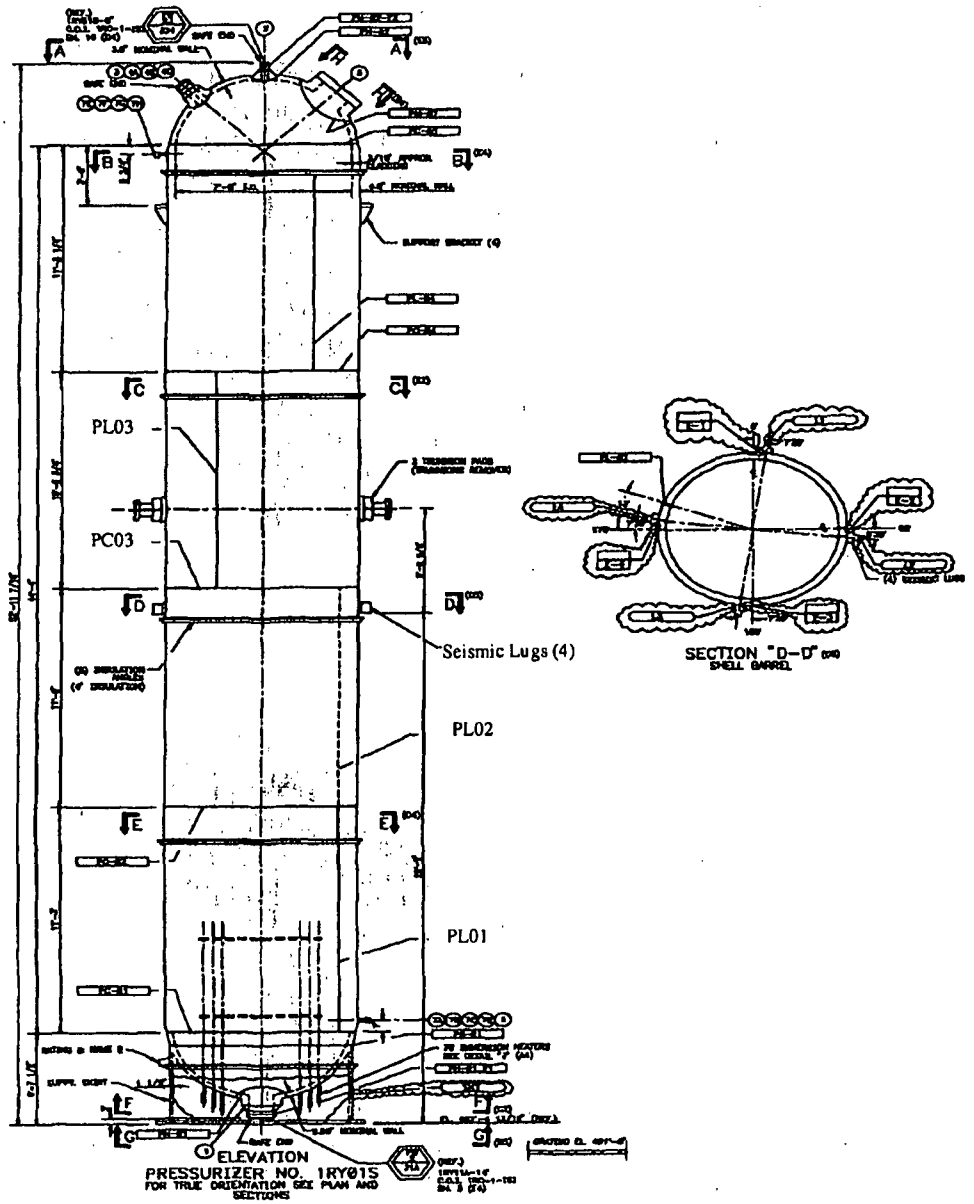

Figure 1-1

Geometry of the Byron Unit 2 Pressurizer

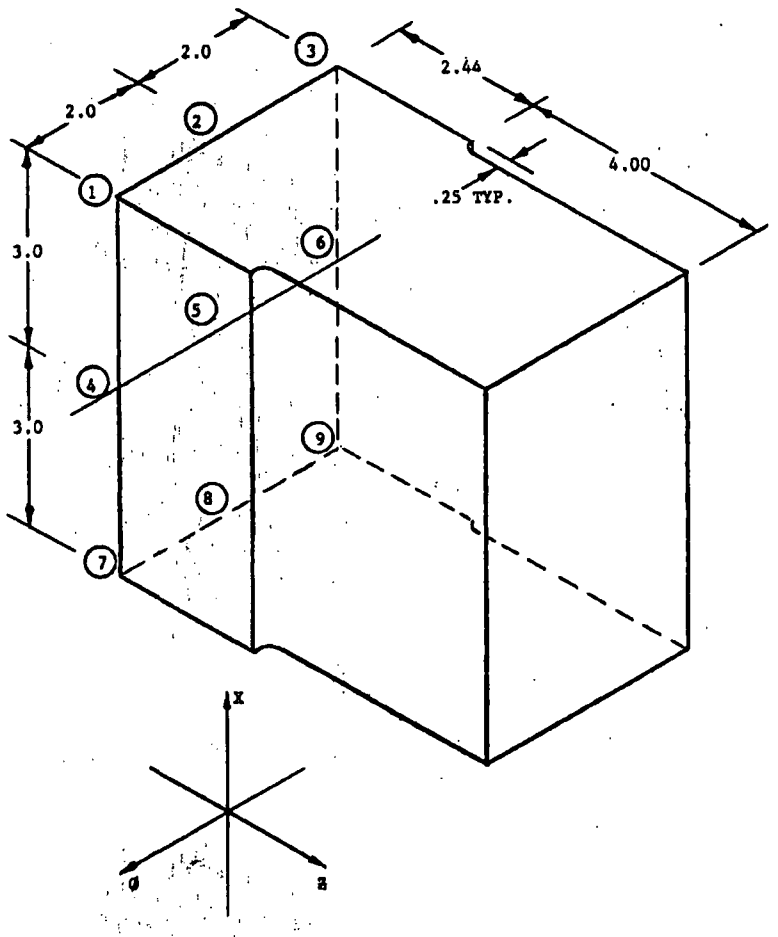

Figure 1-2

Geometry of the Pressurizer Welded Attachment Seismic Lug

2.0 CODE ACCEPTANCE CRITERIA

There are two alternate sets of flaw acceptance criteria for continued service without repair in paragraph IWB-3600 of ASME Code Section XI:

1. Acceptance Criteria Based on Flaw Size (IWB-3611)
2. Acceptance Criteria Based on Stress Intensity Factor (IWB-3612)

For the surface flaw evaluation charts, analyses were performed using both of the acceptance criteria. To illustrate, one evaluation was performed using the flaw size acceptance criteria discussed in Section 2.1, in order to determine the smallest allowable flaw size for all the design transients. Then a second evaluation was performed using the criteria based on stress intensity factor discussed in Section 2.2, to find the smallest allowable flaw size for all the design transients. The results of these two sets of evaluations were then compared, and the more beneficial criterion (allowing the largest flaw) was used.

2.1 Criteria Based on Flaw Size

The code acceptance criteria are stated in Paragraph IWB-3611 of Section XI:

$a_f < 0.1\ a_c$ For normal conditions (upset & test conditions inclusive)

and $a_f < 0.5\ a_i$ For faulted conditions (emergency condition inclusive)

where

a_f = The maximum size to which the detected flaw is calculated to grow at the end of the next specified period, as applicable.

a_c = The minimum critical flaw size under normal operating conditions (upset and test conditions inclusive)

a_i = The minimum critical flaw size for initiation of non-arresting growth under postulated faulted conditions (emergency conditions inclusive)

To determine whether a flaw indication is acceptable for continued service without repair, both criteria must be met. Both criteria have been considered in the construction of the flaw evaluation charts.

2.2 Criteria Based on Stress Intensity Factor

The term stress intensity factor (K_I) is defined as the driving force on a crack. It is a function of the size of the crack and the applied stresses, as well as the overall geometry

of the structure. In contrast, the fracture toughness (K_{Ia}, K_{Ic}) is a measure of the resistance of the material to propagation of a crack. It is a material property, and a function of temperature.

The criteria with respect to K_I used in the evaluation are from IWB-3612 of Section XI. The criteria are:

$$K_I < \frac{K_{Ia}}{\sqrt{10}}$$ For normal conditions (upset & test conditions inclusive)

$$K_I < \frac{K_{Ic}}{\sqrt{2}}$$ For faulted conditions (emergency conditions inclusive)

where

K_I = The maximum applied stress intensity factor for the flaw size a_f to which a detected flaw will grow, during the conditions under consideration, to the next specified period.

K_{Ia} = Fracture toughness based on crack arrest for the corresponding crack tip temperature.

K_{Ic} = Fracture toughness based on fracture initiation for the corresponding crack tip temperature.

To determine whether a surface flaw is acceptable for continued service without repair, both criteria must be met. Both criteria have been considered in the construction of the flaw evaluation charts.

2.3 Primary Stress Limits

In addition to satisfying the fracture criteria, the primary stress limits of the ASME Code Section III, paragraph NB-3000 [5] must be satisfied. A local area reduction of the pressure retaining membrane must be used, equal to the area of the indication, and the stresses increased to reflect the smaller cross section.

3.0 DESIGN TRANSIENTS

The design transients for the Byron Unit 2 pressurizer are listed in Table 3-1[6]. Both the minimum critical flaw sizes (a_c, under normal operating conditions, or a_i under faulted conditions) and the stress intensity factor, K_I, are functions of the stresses at the cross-section where the flaw of interest is detected, along with the material properties. Therefore, the first step for the evaluation of an as-found indication is to determine the appropriate limiting thermal transients for the location of interest. The selection of the most limiting transient was determined by reviewing the through-wall transient stress of all the applicable transients. The transient with the highest outside surface stress in the area of the flaw was chosen as the worst case.

The limiting transients were found to be the inadvertent auxiliary spray for the normal and upset conditions and the Design Basis Earthquake (DBE) for the emergency and faulted conditions.

Table 3-1 Summary of Byron Unit 2 Pressurizer Transients		
Number	**Transient Identification**	**Number of Occurrences**
1	Heatup	1200
2	Cooldown	1200
3	No Load	200
4	Full Load	13200
5	Unit Loading	36600
6	Turbine Roll Test	20
7	Step Load Increase	2000
8	Boron Concentration Equalization	26400
9	Group # 1 Umbrella Inadvertent Startup of an Inactive Loop Loss of Load Inadvertent S. I. Acutation Large Step Load Decrease with Steam Dump Normal Loop Shutdown Normal Loop Startup	520
10	Inadvertent Auxiliary Spray	10
11	Inadvertent RCS Depressuization	540
12	OBE	400
13	Primary Side Hydrotest	10
14	Primary Side Leak Test	200
15	Secondary Side Leak Test	200

4.0 CRITICAL FLAW SIZE CALCULATION

4.1 Introduction

The key parameters used in the evaluation of any indication discovered during inservice inspection include two critical flaw depths. The first of these is critical flaw depth a_c calculated using stresses from the governing normal upset and test conditions. The second one is the critical flaw depth a_i calculated based on the stresses from the governing emergency and faulted conditions. The selection of the governing transients for all the loading conditions can be readily performed based on the results from the available stress analysis.

4.2 Stress Intensity Factor Calculations

One of the key elements of the critical flaw size calculations is the determination of the driving force or stress intensity factor (K_I). This was done for the affected regions using expressions available from the literature.

In all cases, the stress intensity factor for the critical flaw size and fatigue crack growth calculations for the pressurizer shell utilized a representation of the actual stress profile rather than a linearization. This was necessary to provide the most accurate determination of the critical flaw size, and is particularly important for consideration of emergency and faulted conditions, where the stress profile is generally nonlinear and often very steep. The stress profile was represented by a cubic polynomial:

$$\sigma(x) = A_0 + A_1\frac{x}{t} + A_2\left(\frac{x}{t}\right)^2 + A_3\left(\frac{x}{t}\right)^3$$

where

	x	=	coordinate distance into the wall
	t	=	wall thickness
	σ	=	stress perpendicular to the plane of the crack
	A_i	=	coefficients of the cubic fit

The stress intensity factor calculation for a semi-elliptical surface flaw in a cylinder was carried out using the expressions developed by Raju and Newman [7]. Their expression utilizes a cubic representation of the stress profile. The boundary correction factors for the loading conditions utilized for surface flaw are given in Reference [7]. The boundary correction factors for various locations around the periphery of the crack (Φ) can be obtained by using an interpolation method. Stress intensity factors for a semi-elliptical surface flaw in a cylinder can be expressed using the general form:

$$K_I = \left(\frac{\pi a}{Q}\right)^{0.5} \sum_{j=0}^{3} G_i(a/c, a/t, t/R, \phi)A_i$$

where

a/c = Ratio of crack depth (a) to half crack length (c)
a/t = Ratio of crack depth (a) to thickness of a cylinder (t)
t/R = Ratio of thickness (t) to inside radius (R)
Φ = Crack front location
G_j = G_0, G_1, G_2, G_3 are boundary correction factors
Q = Shape Factor $= \int_0^{\pi/2} (\cos^2\Phi + \frac{a^2}{c^2}\sin^2\Phi)^{1/2} d\Phi$

The stress intensity factor for the critical flaw size and fatigue crack growth calculations for the seismic lug is based on that provided in [8] for a plane quarter-circular crack at the edge of a square bar subjected to a uniform uniaxial tensile stress (σ). The stress intensity factor expression is:

$$K_I = F(\theta)\, 2\sigma\sqrt{\frac{a}{\pi}}$$

where $F(\theta)$ is the correction factor for the angular position, θ, on the crack front.

4.3 Fracture Toughness

The other key element in the determination of critical flaw sizes is the fracture toughness of the material. The fracture toughness has been taken directly from the reference curves of Appendix A, Section XI. In the transition temperature region, these curves can be represented by the following equations:

$$K_{IC} = 33.2 + 2.806 \exp.\ [0.02\ (T\text{-}RT_{NDT} + 100°F)]$$

$$K_{Ia} = 26.8 + 1.233 \exp.\ [0.0145\ (T\text{-}RT_{NDT} + 160°F)]$$

where K_{Ic} and K_{Ia} are in ksi$\sqrt{in}$.

The upper shelf temperature regime requires utilization of a shelf toughness which is not specified in the ASME Code. A value of 200 ksi$\sqrt{in}$ has been used here. This value is consistent with general practice in such evaluations, as shown for example in [9] which provides the background and technical basis of Appendix A of Section XI. The value of RT_{NDT} used in these toughness equations was taken from the limiting properties of materials in the pressurizer. The limiting RT_{NDT} was found to be 60°F for the base metal [6].

5.0 FATIGUE CRACK GROWTH

In applying the ASME Code acceptance criteria as introduced in Section 2.0, the final flaw size a_f used in criteria (1) is defined as the maximum flaw size to which the detected flaw is calculated to grow at the end of a specified period, or until the next inspection time. Crack growth calculations have been carried out for the affected region in the Byron Unit 2 pressurizer for which flaw evaluation charts have been constructed. This section provides a discussion of the methodology used as well as the assumptions.

5.1 Analysis Methodology

The methods used in the crack growth analysis are the same as those suggested by Section XI of the ASME Code. The analysis procedure involves postulating an initial flaw at the affected regions and predicting the growth of that flaw due to an imposed series of loading transients. The input required for a fatigue crack growth analysis is basically the information necessary to calculate the parameter ΔK_I which depends on the crack and structure geometry as well as the range of applied stresses in the area where the crack exists. The stress intensity factors are calculated as discussed in Section 4.2. Once ΔK_I is calculated, the growth due to that particular stress cycle can be calculated by the reference crack growth curves in Section XI Appendix A. This increment of growth is then added to the original crack size, and the analysis proceeds to the next transient. The procedure is continued in this manner until all the transients predicted to occur in the period of evaluation have been analyzed.

The design transients applicable to the Bryon Unit 2 pressurizer are listed in Table 3-1. These transients are spread equally over the design lifetime of the pressurizer. Faulted conditions are not considered because their frequency of occurrences is too low to affect fatigue crack growth.

The effect of the residual stresses due to the welding of the seismic lugs to the pressurizer shell was ignored in the fatigue crack growth analysis. This is because the area was post-weld heat treated such that the residual stress would be minimal. In addition, the residual stresses are additive to both the maximum and minimum stresses in the crack growth calculation and therefore do not have any impact on the resulting stress intensity range (K_{max} - K_{min}). The only effect on the crack growth rate is due to a higher stress ratio (K_{min}/K_{max}). However, this effect is minimal since the crack growth rate is governed by the stress intensity range rather than the stress ratio.

Crack growth calculations were carried out for axial and circumferential flaws over a range of flaw depths. For all the cases, based on generally accepted methodology, the flaw was assumed to maintain a constant shape as it grew.

5.2 Crack Growth Rate Reference Curves

The air environment crack growth rate curve used in the analyses was taken directly from Appendix A in 1990 Addenda of the ASME Code 1989 Edition. This curve is similar to the curve in the 1989 Edition [2] but included the effect of Stress Ratio (R) and appears also in later editions of the ASME Code. The use of this curve represents a more up-to-date treatment of the crack growth rate. Air environment curve was used for the outside surface flaws because they are not exposed to the primary water environment. The crack growth rate reference curve for air environment is a function of applied stress intensity factor range (ΔK_I) and stress ratio (R). This reference curve is also shown in Figure 5-1.

$$\frac{da}{dN} = \left(1.99 \times 10^{-10}\right) 25.72 \left(2.88 - R\right)^{-3.07} \Delta K_I^{3.07}$$

where

$\frac{da}{dN}$	=	Crack growth rate, micro-inches/cycle
R	=	K_{min} / K_{max} $(0 \leq R < 1)$
ΔK	=	stress intensity factor range, ksi$\sqrt{in}$
	=	$K_{max} - K_{min}$

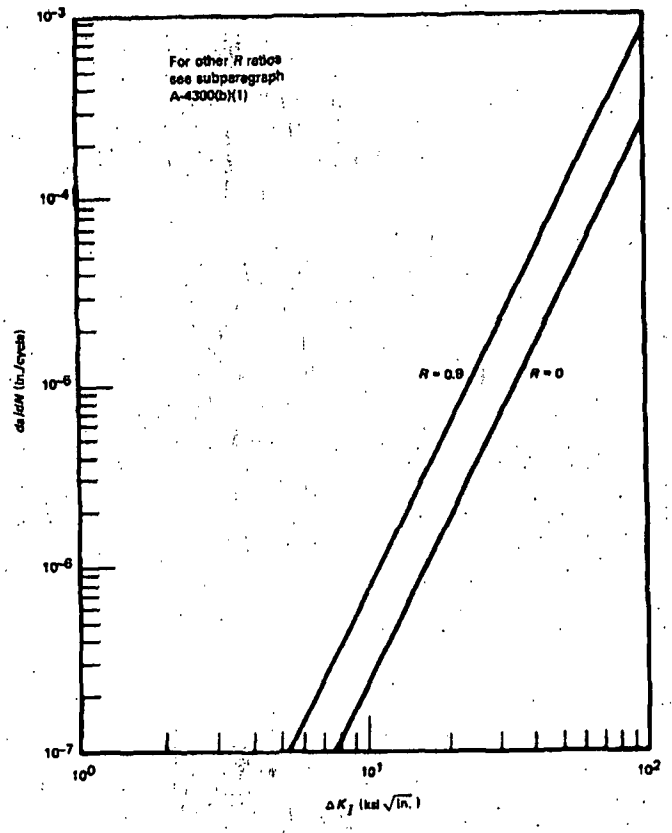

FIG. A-4300-1 REFERENCE FATIGUE CRACK GROWTH CURVES FOR CARBON AND LOW ALLOY FERRITIC STEELS EXPOSED TO AIR ENVIRONMENTS (SUBSURFACE FLAWS)

Figure 5-1

Reference Fatigue Crack Growth Curves for Carbon and Low Alloy Ferritic Steels in Air Environment

6.0 PRESSURIZER SHELL FLAW EVALUATION

6.1 Flaw Evaluation Charts for Flaws Propagating Through the Pressurizer Shell

Longitudinal flaws and circumferential flaws are defined respectively as flaws oriented along and perpendicular to the pressurizer centerline axis. Surface flaw evaluation charts were generated by first determining the critical flaw depths for a range of flaw shapes as discussed in Section 4.0 based on the acceptance criteria discussed in Section 2.0. The most limiting critical flaw depths, defined as a_f, from all the loading conditions are used.

It should be noted that the results of allowable flaw depth based on the primary stress limit criteria are bounded by the results from the flaw size criteria of Section 2.1 and the stress intensity factor based flaw size from Section 2.2 based on a review of the technical basis document [6] and the as-built Byron Unit 2 pressurizer geometry The allowable flaw depth determined based on the primary stress limit criteria is affected only by the diameters and wall thickness of the pressurizer shell and the applicable primary stress loadings.

The axial stress distribution along the upper middle shell to lower middle shell weld (PC03) [10] and those due to the seismic lug [4] were used for determining the circumferential critical flaw depths since the seismic lug (PSL-1) was at about the same elevation as the PC03 weld. As for the hoop stress distribution, those from the longitudinal weld seam (PL02) [11] and those due to the seismic lug [4] were used for determining the axial critical flaw depths since the seismic lug (PSL-1) was at about the same elevation as the top of the PL02 weld, as shown in Figure 1-1.

The corresponding initial flaw depths, defined as a_o, which will grow to the above critical flaw depth a_f after 10, 20, and 30 years of service are then determined based on the results from the fatigue crack growth analysis discussed in Section 5.0.

Axial and Circumferential flaw evaluation charts for the pressurizer shell can then be generated by plotting the flaw shape parameter a/ℓ as the abscissa from 0.1 to 0.5 and the flaw depth parameter a/t in % as the ordinate. The resulting circumferential and axial flaw evaluation charts are shown in Figures 6-1 and 6-2 respectively. Allowable flaw depth limit curves are provided in the flaw evaluation charts for operational periods of 10, 20 and 20 years from the time of detection.

The allowable flaw size limit curve for a given operational period shows the maximum acceptable flaw depth beyond which repair is required for continued service. Any surface indication which falls below the allowable flaw depth limit curve for a given operational period will be acceptable by the Code, with the analytical justification provided herein. However, IWB-2420 of ASME Section XI requires future monitoring of such indications. The areas containing the indications shall be reexamined during the next three inspection periods listed in the schedule of the inspection program of IWB-2400.

6.2 Flaw Evaluation

The evaluation procedures contained in ASME Section XI are clearly specified in paragraph IWB-3600. Once the indication is detected, it must be characterized as to its location, length (ℓ) and depth dimension. This characterization is discussed in further details in paragraph IWA-3000 of Section XI.

Two basic dimensionless parameters can fully address the characteristics of a surface flaw:

1) Flaw Shape Parameter a/ℓ
2) Flaw Depth Parameter a/t

where:

t	=	wall thickness, in.
a	=	flaw depth, in.
ℓ	=	flaw length, in.

The length of the indication of concern on the outside surface of the pressurizer shell is 0.8 inch. However, the depth of the linear indication is not available without performing further NDE.

The realistic maximum flaw shape was taken as $a/\ell = 0.5$ which is a semi-circular shape, because service experience had shown that flaws were not observed which were deeper than they were long. It is also evident that the driving force, or stress intensity factor, for such flaw is greater at the flaw intersection with the free surface than at its deepest point, and thus a semi-circular flaw would naturally tend to grow in surface length, causing the a/ℓ ratio to decrease with time. For these reasons, the Code, in paragraph IWA-3300 (a)(3) specifies that a flaw shape cannot exceed $a/\ell = 0.5$.

When considering an indication with a fixed length, the assumption of $a/\ell = 0.5$ results in maximizing the depth of the flaw. In this case, for a flaw with length = 0.8 inches, the depth for a semi-circular flaw would be 0.4 inches. For a 6:1 flaw shape, the depth would only be 0.133 inches. Therefore the assumption of $a/\ell = 0.5$ is conservative for the evaluations performed.

It should be noted that the range of flaw shapes considered in the ASME Code Section XI is for a/ℓ between 0.0 and 0.5. This range of flaw shapes "encompasses the spectrum of flaw geometries normally encountered in non-destructive examination of pressure retaining components" [12]. This statement was quoted from the technical basis for the Section XI acceptance standards, written by Ray Maccary of NRC in May of 1980 [12].

A confirmatory best estimate Ultrasonic Testing (UT) measurement was also performed to estimate the flaw depth in order to validate the conservatism in the assumption of a flaw depth of 0.4 inch used in the flaw evaluation. UT measurement could not be obtained for the initial 0.1 inch of the flaw depth, and hence the flaw could not be

characterized adequately for fracture mechanics evaluation purposes. However, the UT measurement did provide evidence that the indication is being confined to the surface of the weld and is less than 0.1 inches from the free surface. There is no trace of any indications that are more than 0.1 inches below the surface of the weld. Therefore, this best estimate UT provided evidence that the indication is limited to the weld area only, and not into the pressurizer shell wall. It also confirmed that the flaw depth cannot be more than 0.1 inch and the flaw depth of 0.4 inch assumed in the flaw evaluation is conservative.

The pressurizer vessel wall thickness was taken as 4.0 inches which is confirmed by the Exelon [Commonwealth Edison] drawing 2PZR-1-ISI [3].

Based on the above information, the flaw parameters for the as-found indications are determined as follows for both the axial and circumferential orientations:

Flaw Depth (a) = 0.4 in

Flaw Length (ℓ) = 0.8 in

Pressurizer Wall Thickness (t) = 4.0 in

Flaw Shape Parameter (a/ℓ) = 0.5

Flaw Depth Parameter (a/t) = 0.1

These flaw parameters are plotted in Figures 6-1 and 6-2. It is evident that ample margin exists and that the as-found indications are acceptable without repair for at least 30 years of service life.

Assuming a circumferential flaw depth of 0.4 inch, that is a/t = 0.1, the maximum allowable aspect ratio as shown in Figure 6-1 is at least 10:1 (length:depth) . Therefore for a circumferential flaw with a flaw depth of 0.4 inch, the maximum allowable length of the flaw can be at least 4 inches for an operational period of at least 30 years.

For an axial flaw with a flaw depth parameter a/t = 0.1, the maximum allowable aspect ratio as shown in Figure 6-2 for an operational period of 30 years is about 6.5:1. Therefore for an axial flaw with a flaw depth of 0.4 inch, the maximum allowable length of an axial flaw is 2.6 inches for an operational period of 30 years. Using the same approach, the maximum allowable length is at least 4 inches for an operational period of 10 years.

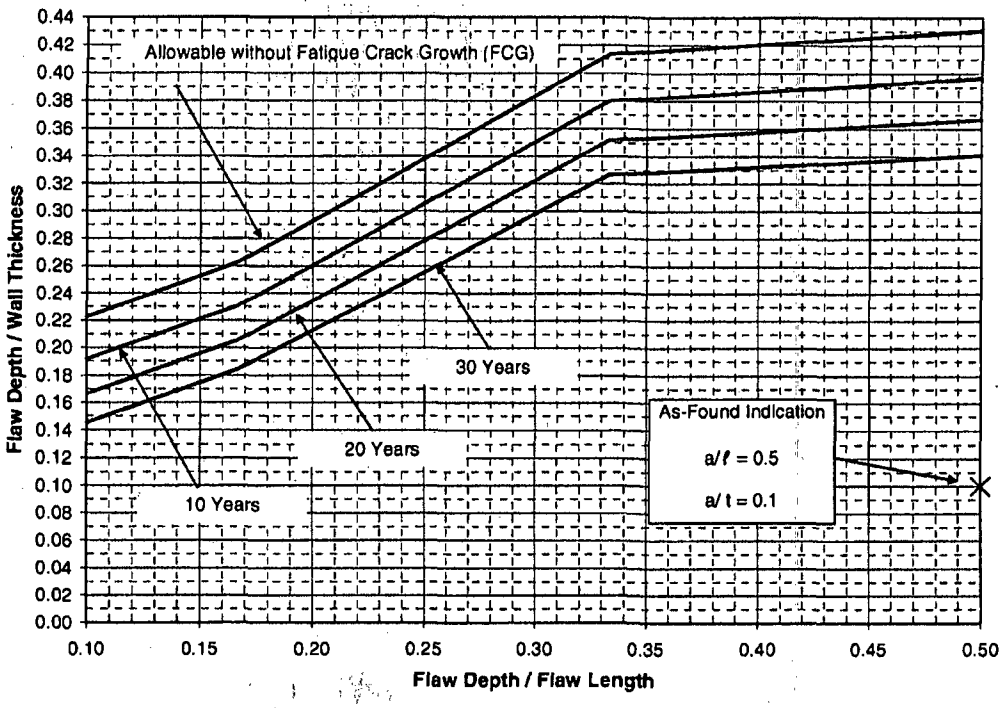

Figure 6-1

Circumferential Flaw Evaluation Chart – Pressurizer Welded Attachment Seismic Lug (PSL-1) Region

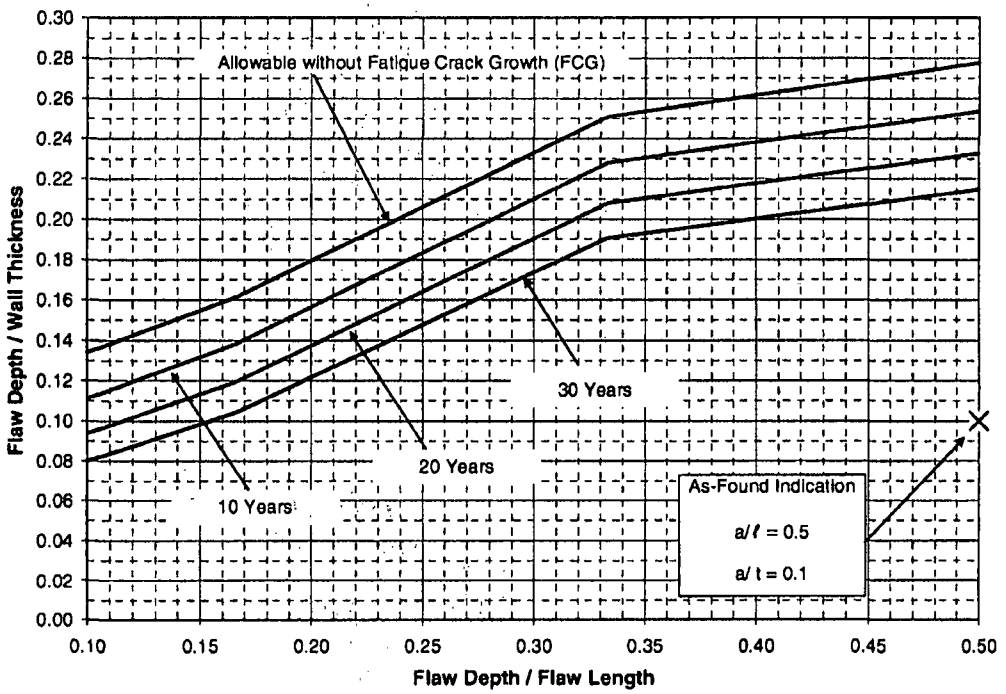

Figure 6-2

Axial Flaw Evaluation Chart – Pressurizer Welded Attachment Seismic Lug (PSL-1) Region

7.0 WELD ATTACHMENT SEISMIC LUG FLAW EVALUATION

A linear quarter-circular flaw is postulated along the top of the seismic lug (PSL-1) as shown in Figure 7-1. The stress intensity factor expression for a plane quarter-circular flaw at the edge of a square bar was used as discussed in Section 4.2. The use of this stress intensity factor expression is conservative with respect to the detected flaw configuration because the indication is assumed to be an edge crack and that the depth of the flaw is assumed to be the same as the length of the detected indication. This quarter-circular edge flaw model is also a conservative model for a semi-circular flaw near the top center of the seismic lug weld. Therefore the flaw evaluation results obtained can be conservatively applied to the actual indication detected.

The critical flaw depth for such quarter-circular flaw was determined as discussed in Section 4.0 and based on the acceptance criteria discussed in Section 2.0. The resulting allowable flaw depth at the end-of-evaluation period, defined as a_f, is shown in Figure 7-2.

The corresponding initial flaw depths, defined as a_o, which will grow to the above allowable flaw depth, a_f, after 10, 20, and 30 years of service can then determined based on the results from the fatigue crack growth analysis discussed in Section 5.0.

The allowable flaw size for an operational period of 10, 20 and 30 years are shown in Table 7-1.

Table 7-1

Allowable Flaw Length/Depth (Inch) Based On a Quarter-Circular Edge Flaw

Operational Period	10 years	20 years	30 years
Initial Flaw Size (a_o)	1.244	1.237	1.230

The length of the indication of concern detected on the top surface of the welded attachment seismic lug is 0.8 inch. However, the depth of the linear indication is not available without performing further NDE.

The realistic maximum flaw shape was taken as $a/\ell = 0.5$ which is a semi-circular shape based on the rationale discussed in Section 6.2. The flaw parameters for the as-found indications on the top of the seismic lug are:

Flaw Depth (a) = 0.4 in

Flaw Length (ℓ) = 0.8 in

Based on the results tabulated in Table 7-1, a quarter-circular flaw ($a = \ell = 1.23$ inch) postulated along the top of the seismic lug is acceptable for 30 years without repair. As

can be seen in Table 7-1, the fatigue crack growth due to seismic loading experienced by the lug is negligible. Since the flaw shape of the as-found indication is being encompassed by the maximum allowable flaw shape, it can be concluded that the as-found indication along the top of the seismic lug is acceptable for 30 years without repair.

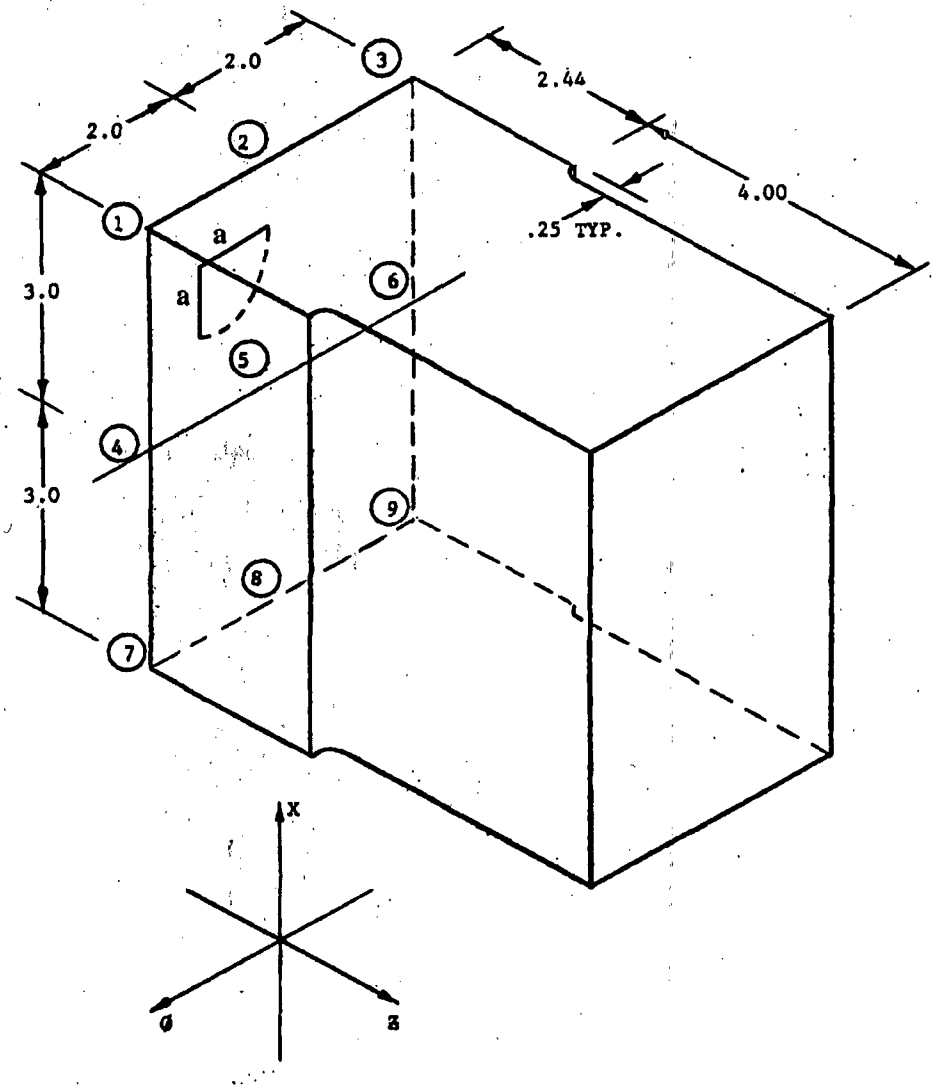

Figure 7-1

Postulated Crack Along the Top of Pressurizer Seismic Lug

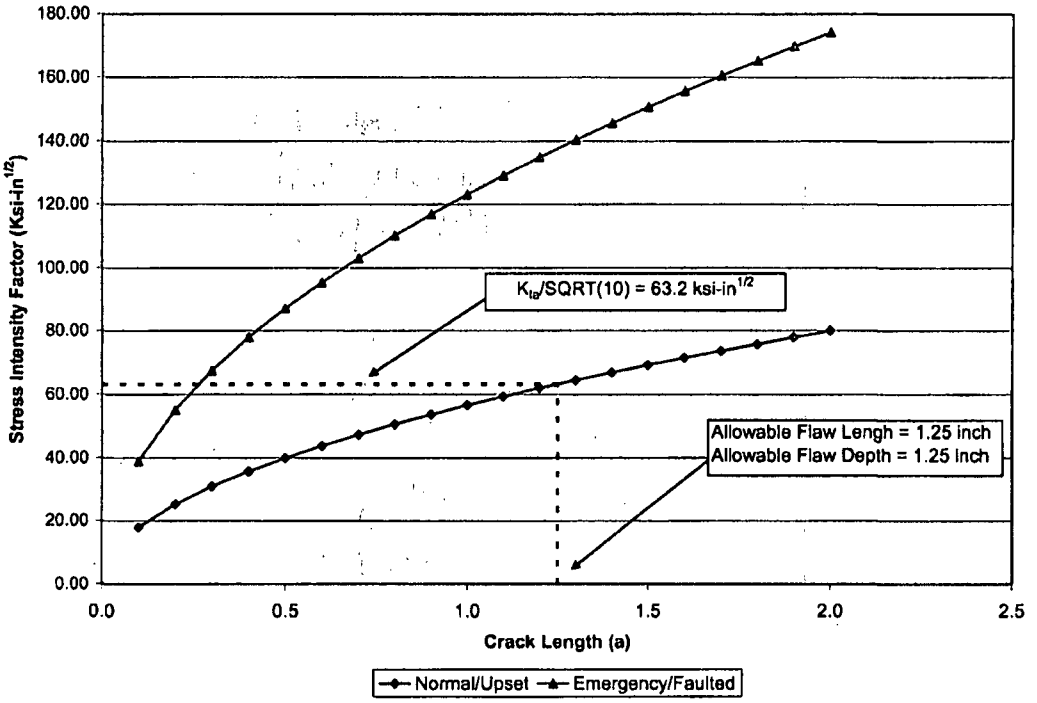

Figure 7-2

Allowable Flaw Size Determination for Pressurizer Seismic Lug Without Including Fatigue Crack Growth

8.0 SUMMARY AND CONCLUSION

During the B2R12 refueling outage, the Byron Unit 2 ISI program scheduled the inspection of the Pressurizer Integrally welded attachment seismic lugs PSL-1 through PSL-4. Liquid penetrant inspections were performed on the welded attachment seismic lug (PSL-1) to the pressurizer and revealed aligned linear indications near the toe of the weld closest to the pressurizer vessel. The lengths of the two linear indications detected are 0.2 inch and 0.8 inch which are separated by 0.9 inch. Based on the rules of IWA-3400-1, these two linear indications need not be grouped into a single indication. Using the acceptance standard in Table IWB 3510-3, the 0.2 inch linear surface indication was shown to be acceptable. However, the 0.8 inch linear surface indication exceeded the acceptance standard of 10.4%. There is no known evidence that the indications are service induced, but rather it is a lack of fusion between the weld beads. The circumferential fabrication defects are not likely to be located in the pressure boundary regions of the pressurizer shell and not likely to extend any further beyond the fillet weld into the full penetration weld.

Nevertheless, these indications are conservatively evaluated in accordance with the ASME Code Section XI flaw evaluation guidelines. Flaw evaluation charts have been developed for both outside axial and circumferential surface flaws to determine the acceptability of the as-found indications. These flaw evaluation charts were designed based on the ASME Section XI Code IWB-3600 acceptance criteria for continual service without repair. These flaw evaluation charts are applicable to both Byron and Braidwood Units 1 and 2.

The depths of the linear indications are not available without performing further NDE. The linear indication of concern with a fixed length was assumed to have a maximum flaw shape (a/ℓ) of 0.5, which is a semi-circular shape flaw in order to maximize its flaw depth. A confirmatory best estimate UT measurement was also performed to validate the conservatism in the flaw depth assumption used in the flaw evaluation. The UT examination interrogated the vessel base material volume below the flaw to a depth from 0.10 inch to 0.50 inch. The transducer was unable to examine the volume less than 0.10 inch below the flaw because of physical restrictions. No indications were seen within the examined volume. Flaw evaluation was therefore performed based on this flaw depth parameter assuming either an axial or circumferential orientation. It is concluded that ample margin exists for the linear indication of concern and that no repair is necessary for an operational period of 30 years.

Similar evaluation was performed by postulating a quarter-circular edge flaw along the top of the seismic lug (PSL-1). It is concluded that ample margin exists for the linear indication of concern and that no repair is necessary for an operational period of 30 years.

9.0 REFERENCES

1. WESDYNE International Letter Report: PT Indication Evaluation B2R12-PT-006, Revision 1, 10/03/05 "Inservice Inspection of Pressurizer Integral Welded Attachment PSL-1 during B2R12", dated October 3, 2005. (Westinghouse Proprietary Document)

2. ASME Code Section XI, "Rules for Inservice Inspection of Nuclear Power Plant Components," 1989 Edition.

3. Exelon [Commonwealth Edison] drawing 2PZR-1-ISI, Revision B, dated August 4, 2000.

4. WNET-130 (CBE) Volume 1, Rev.1 , Model D Series 84 Pressurizer Stress Report for Commonwealth Edison Company (CBE) Byron Generating Station Unit 2, October 1978. (Westinghouse Proprietary Document) and WNET-130 Volume 10, Model D Series 84 Pressurizer Stress Report: Support Lug Analysis, February 1977. (Westinghouse Proprietary Document)

5. ASME Boiler and Pressure Vessel Code, Section III, Division 1, "Nuclear Power Plant Components," 1971 Edition through Summer 1973 Addenda.

6. WCAP-12045, Rev. 2, "Background and Technical Basis: Handbook on Flaw Evaluation for the Byron and Braidwood Units 1 & 2 Main Coolant System and Components," Westinghouse Electric Corporation, September 2003. (Westinghouse Proprietary Document)

7. Newman, J. C. Jr. and Raju, I. S., "Stress Intensity Factors for Internal Surface Cracks in Cylindrical Pressure Vessels", ASME Trans., Journal of Pressure Vessel Technology, Vol. 102, 1980, pp. 342-346.

8. "Compendium of Stress Intensity Factors", D. P. Rooke and D. J. Cartwright.

9. Marston, T. U. et. al. "Flaw Evaluation Procedures: ASME Boiler and Pressure Vessel Code, Section XI", Electric Power Research Institute Report EPRI-NP-719SR, August 1978.

10. Letter AEA-85-185, "Byron Pressurizer Stresses for Circumferential Weld Seams" Dated August 9, 1985. (Westinghouse Proprietary Document)

11. Letter AEA-85-137, "Byron Pressurizer Stresses for Longitudinal Weld Seam" Dated August 13, 1985. (Westinghouse Proprietary Document)

12. Maccary, R.R., "Nondestructive Examination Acceptance Standards: Technical Basis and Development of Boiler and Pressure Vessel Code, ASME Section XI, Division 1", EPRI Report NP-1406-SR, May 1980.