Nuclear Operating Company
South Texas Project Electric Generating Station P.O. Box 289 Wadsworth, Texas 77483

February 14, 2008
NOC-AE-08002263
10CFR50.55a

U. S. Nuclear Regulatory Commission
Attention: Document Control Desk
One White Flint North
11555 Rockville Pike
Rockville, MD 20852

South Texas Project
Unit 1
Docket No. STN 50-498
Relief Request RR-ENG-2-30, Rev. 3

Reference: Letter, Robert A. Gramm, NRC, to James J. Sheppard, STPNOC, dated June 27, 2003, "SOUTH TEXAS PROJECT, UNIT 1 - Request For Relief, RR-ENG-2-30, Revision 2, From American Society Of Mechanical Engineers Boiler And Pressure Vessel Code (ASME Code) Requirements For Approval Of ASME Section XI Code Case N-516-2 For Underwater Welding Of Core Barrel Locking Tab (TAC No. MB8925, ML031780907)

The referenced letter approved a relief request submitted by STP Nuclear Operating Company (STPNOC) in 2003 for use of Code Case N-516-2 on the reactor vessel core barrel and its Roto-Lock insert tabs. STPNOC requests approval of the attached relief request for essentially identical underwater welding on the same insert during the Unit 1 Spring 2008 outage (1RE14).

STPNOC plans to replace the existing Roto-Lock insert with a Roto-Lock insert with a flow blocking plate welded in the bottom of the insert. The replacement is performed by a diver underwater and requires removing the insert locking tab for which relief was approved in 2003 and welding a new tab using the same process and material types approved in 2003. The tab removal and replacement is not due to failure or deficiency in the welding performed in 2003.

There are no commitments in this letter.

A047
NRR

STI: 32265298

NRC approval is requested by April 11, 2008 to support the 1RE14 schedule.

If there are any questions regarding this correction, please contact Wayne Harrison at (361) 972-7298 or me at (361) 972-7431.

Brandon Jenewein
Manager,
Testing/Programs

Attachment: 10CFR50.55a Relief Request RR-ENG-2-30, Rev. 3

cc:
(paper copy)

Regional Administrator, Region IV
U. S. Nuclear Regulatory Commission
611 Ryan Plaza Drive, Suite 400
Arlington, Texas 76011-8064

Mohan C. Thadani
Senior Project Manager
U.S. Nuclear Regulatory Commission
One White Flint North (MS 7 D1)
11555 Rockville Pike
Rockville, MD 20852

Senior Resident Inspector
U. S. Nuclear Regulatory Commission
P. O. Box 289, Mail Code: MN116
Wadsworth, TX 77483

C. M. Canady
City of Austin
Electric Utility Department
721 Barton Springs Road
Austin, TX 78704

Richard A. Ratliff
Bureau of Radiation Control
Texas Department of State Health Services
1100 West 49th Street
Austin, TX 78756-3189

(electronic copy)

A. H. Gutterman, Esquire
Morgan, Lewis & Bockius LLP

Mohan C. Thadani
U. S. Nuclear Regulatory Commission

Thad Hill
Eddy Daniels
Marty Ryan
Robert Bailey
Steve Winn
NRG South Texas LP

Ed Alarcon
J. J. Nesrsta
R. K. Temple
Kevin Pollo
City Public Service

Jon C. Wood
Cox Smith Matthews

C. Kirksey
City of Austin

10CFR50.55a Relief Request RR-ENG-2-30, Rev. 3

Proposed Alternative
in Accordance with 10 CFR 50.55a(a)(3)(i)

--Alternative Provides Acceptable Level of Quality and Safety--

1. ASME Code Components Affected

Unit 1 reactor vessel core barrel and its Roto-Lock insert locking tabs that secure the inserts and prevent their rotation.

2. Applicable Code Edition and Addenda

American Society of Mechanical Engineers (ASME) Boiler and Pressure Vessel Code, Section XI, 1989 Edition with no Addenda.

3. Applicable Code Requirement

IWA-4000 of Section XI does not address underwater welding. However, Code Case N-516-3, "Underwater Welding, Section XI, Division 1," includes alternative procedure, performance, and filler metal qualifications, and alternative examination requirements to those contained or referenced in IWA-4000 for use when the welding is performed underwater.

4. Reason for the Request

STPNOC plans to replace an existing Roto-Lock insert with a new Roto-Lock insert with a flow blocking plate welded in the bottom of the insert. The replacement is performed by a diver underwater and requires removing the insert locking tab for which relief was approved in 2003 and welding a new tab using the same process and material types approved in 2003. The tab removal and replacement is not due to failure or deficiency in the welding performed in 2003.

In the description of Code Case N-516-3, Regulatory Guide (RG) 1.147 Rev. 15 states that NRC approval is required for the technique to be used in the weld repair or replacement of irradiated material underwater.

Consequently, STPNOC requests approval for the use of Code Case N-516-3 for underwater fillet welding of a Roto-Lock insert locking tab to the reactor vessel core barrel to secure the insert and prevent its rotation.

5. Proposed Alternative and Basis for Use

STPNOC requests relief from the requirements of IWA-4000 in accordance with 10CFR50.55a(a)(3)(i) in order to perform underwater welding for repairs. IWA-4000 of the Section XI code of record at the South Texas Project does not address underwater welding. STPNOC requests NRC approval of ASME Section XI Code Case N-516-3 for use at STP on the basis that it provides an acceptable level of quality and safety.

STPNOC's relief request approved in 2003 cited Code Case N-516-2. This submittal cites Code Case N-516-3. The NRC documented their acceptance of Code Case N-516-3 in RG 1.147, Revision 15, dated October, 2007. Code Case N-516-3 added another welding process that is not relevant to this relief request. The description below is based on the relief request approved in 2003, with STPNOC's responses to the NRC's requests for additional information incorporated into the text.

STPNOC requests approval for use of Code Case N-516-3 in order to deposit three 0.180-inch fillet welds on one locking device. This specific application is for wet welding to make three underwater fillet welds to attach one Roto-Lock insert locking tab to the core barrel to secure the Roto-Lock insert and prevent its rotation. The subject fillet welds are to prevent the Roto-Lock insert from backing out and potentially becoming a loose part. They are not structural or pressure boundary welds. The requirements imposed on the welds are conservative with respect to the safety function of the welds.

The locking tab is A-240 Tp 304L. The core barrel is SA-182 F304H. The filler metal is SFA 5.4 E316L-17. The shielded metal arc welding (SMAW) process will be used. Cutting is expected to be done with a rotary file.

These welds will be made using a weld procedure specification (WPS) qualified in accordance with Code Case N-516-3. Examination will be remote visual by a certified inspector. No on-going examination is required or planned. The WPS was qualified with tensile and bend tests in accordance with ASME Section IX, with an additional chemical, ferrite, and tensile test performed in accordance with Code Case N-516-3. ASME Section IX guided bend tests per QW-160 have been performed.

The Procedure Qualification Records for the tensile test and the filler material weld pad were performed at a depth of 35 feet. This qualifies the welding procedure and the filler material to a depth range of from 2 to 45 feet. The replacement weld is expected to be performed at a depth of 29 feet. The tests performed meet the qualification requirements of Code Case N-516-3 for welding at a depth of 29 feet.

A confirmation weld will be performed on 1/2-inch plate using the WPS and the same weld material as that to be used in the production weld. The confirmation weld will be subject to the same inspection requirement as the production weld.

STPNOC determined that the procedure qualification requirements of the code case have been met. The results are summarized below.

Procedure qualification results are as follows:

- 2 root and 2 face bends - acceptable
- 2 tensile tests - acceptable
- Chemistry test results certified that the weld pad was welded with a 3/32" diameter E316L-17 electrode of Lot 550P. The weld pad was welded at a water depth of 35 feet. Chemistry conforms to the chemical requirements of ASME SFA 5.4, AWS Classification E316L-XX.
  - Carbon 0.032
  - Chromium 17.83
  - Nickel 12.02
  - Molybdenum 2.35
  - Manganese 0.63
  - Silicon 0.61
  - Phosphorus 0.023
  - Sulfur 0.013
  - Copper 0.07
  - Cobalt 0.29

Six delta-ferrite readings were taken on the weld pad and resulted in an average of 6.5FN. This complies with site requirements for a minimum of 5FN and a maximum of 25FN. The six readings were 7.0, 6.5, 7.0, 6.5, 5.5 and 6.5.

The total neutron fluence at the vessel flange area is expected to be no higher than 1.2E+17 n/cm^2 after 40 calendar years of plant operation. As discussed in the 2003 application, the mockup material will not have the same fluence level applied to it. The application is not Class 1 and is non-structural and non-pressure retaining. Additionally, the locking tab and core barrel are not ferritic materials and, therefore, not subject to neutron embrittlement.

These additional requirements, combined with the alternative requirements of Code Case N-516-3, provide an acceptable level of quality and safety for underwater welding.

6. Duration of Proposed Alternative

This relief request will be implemented during the Unit 1 spring 2008 refueling outage.

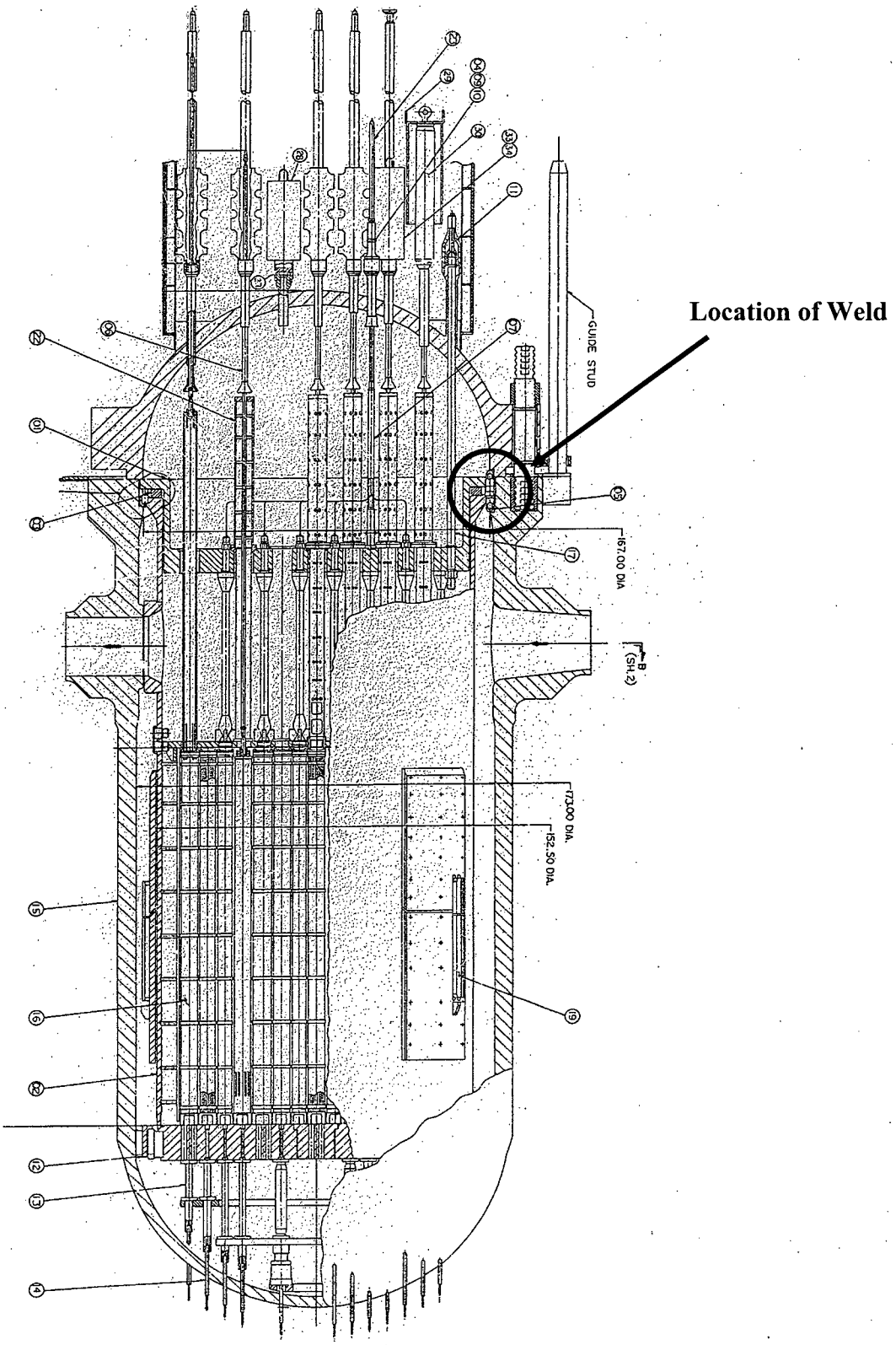
Location of Weld
GUIDE STUD
167.00 DIA
B
(SH.2)
172.00 DIA.
152.50 DIA.

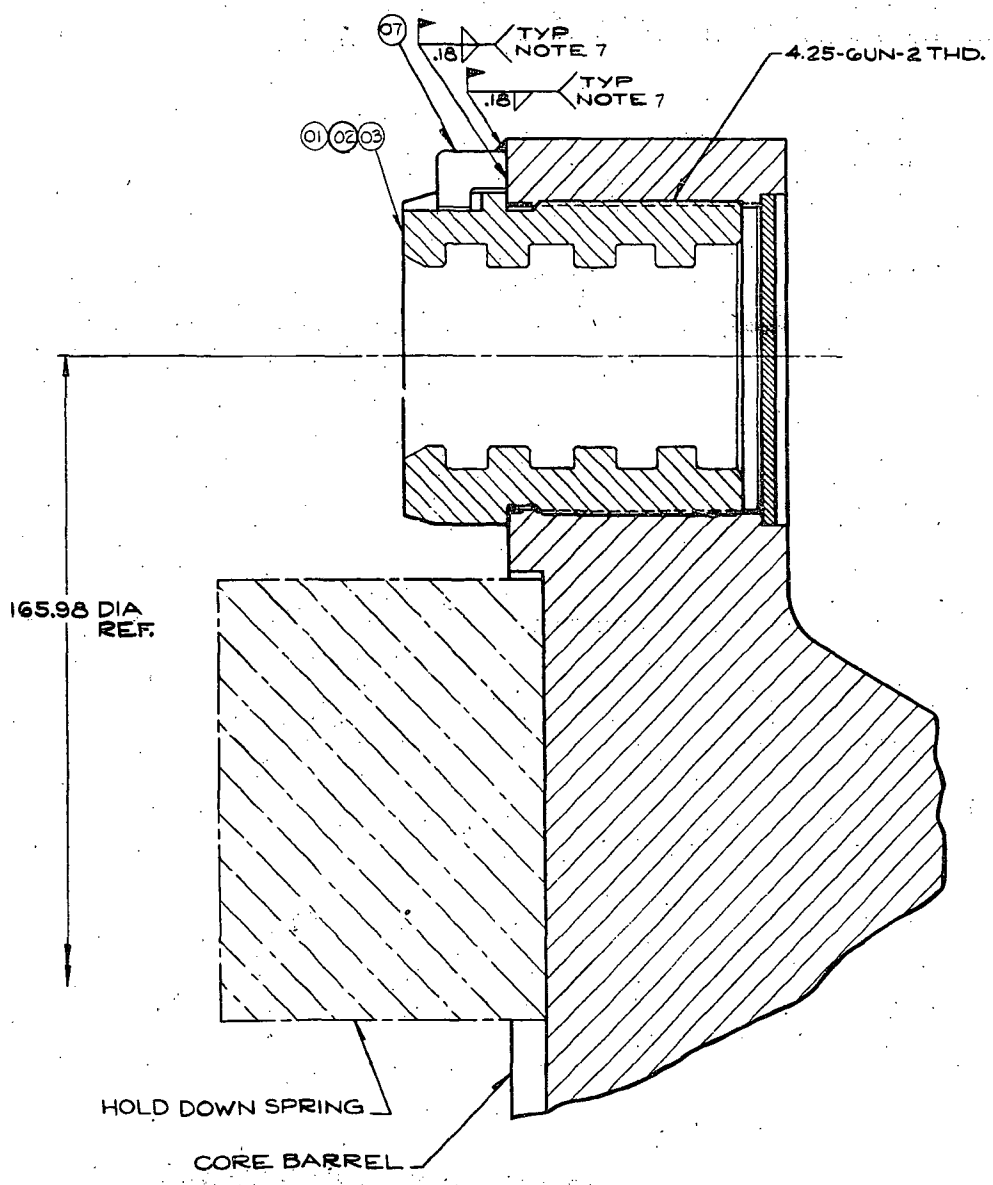
07
.18
TYP
NOTE 7
.18
TYP
NOTE 7
4.25-GUN-2 THD.
01
02
03
165.98 DIA
REF.
HOLD DOWN SPRING
CORE BARREL

FULL SIZE

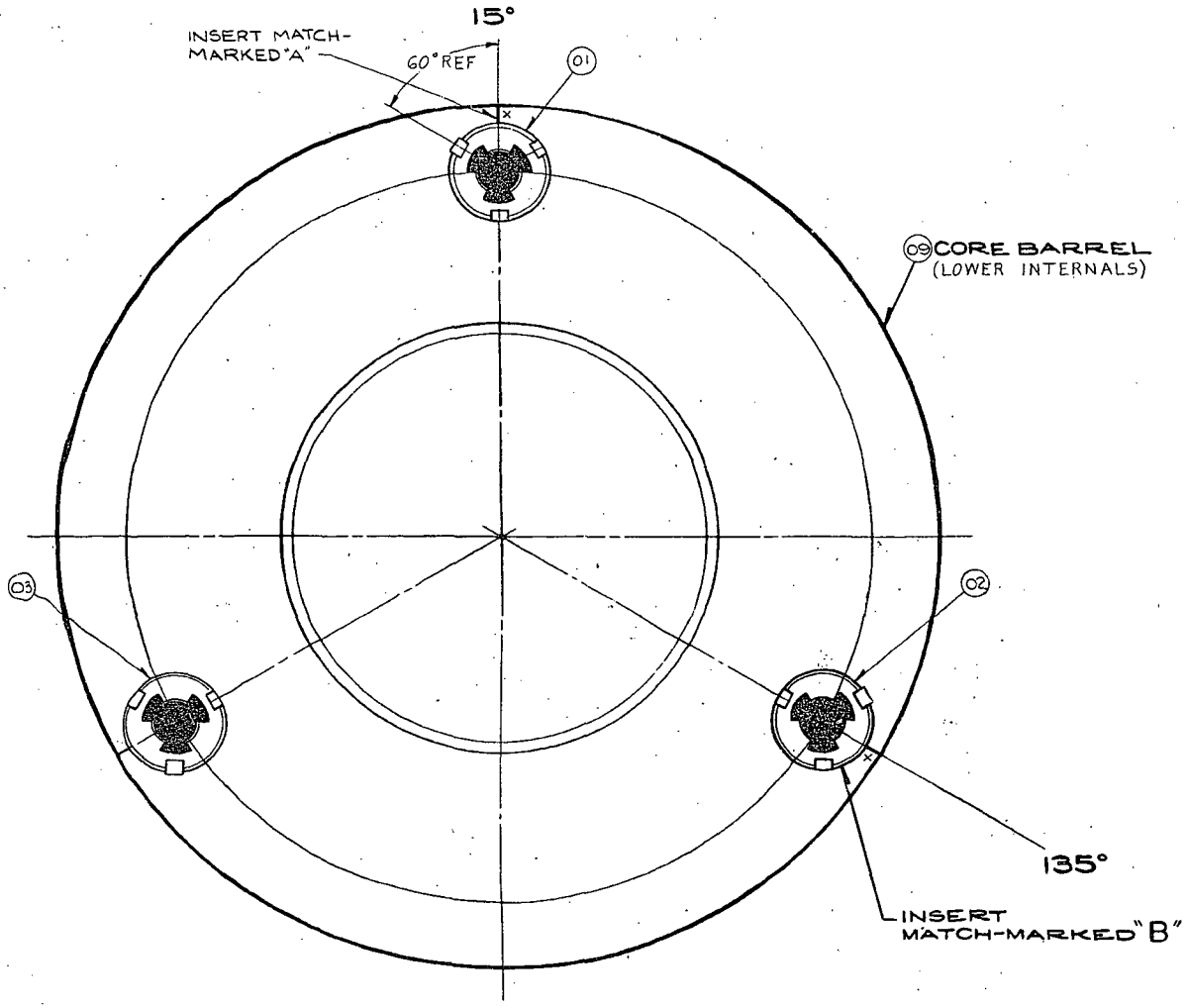

SCHEMATIC
NOT TO SCALE