Draft Submittal
(Pink Paper)

Reactor Operator Operator Written Exam

FARLEY NOV/DEC 2007-301 EXAM

05000348/2007301 AND 05000364/2007301

NOVEMBER 5 - 15, 2007
DECEMBER 21, 2007

FOLDER 1 OF 2

1. 001 AK2.01 001/BANK/WBN BANK/HIGHER//RO/FARLEY/11/2007/NO

Given the following:

- Unit 1 is currently performing a power increase to 100%.
- The reactor is at 75% power with rods in AUTOMATIC when the following indications are observed:
  - Tavg - Tref deviation is approximately +2°F and rising.
  - Pressurizer level 46% and slowly rising.
  - Pressurizer spray valves are throttled open.
  - Reactor Power at approximately 75% and slowly rising.
  - Control Bank D Rods are stepping OUT in auto at 8 steps per minute.

Which ONE of the following describes the event in progress and the FIRST action that must be performed?

A. Inadvertent RCS dilution; Trip the reactor and enter E-0, Reactor Trip or Safety Injection.

B. Inadvertent RCS dilution; Place the rod control mode selector to MANUAL and match Tavg with Tref by inserting rods.

C. Uncontrolled Continuous Rod Withdrawal; Trip the reactor and enter E-0, Reactor Trip or Safety Injection.

D. Uncontrolled Continuous Rod Withdrawal; Place the rod control mode selector switch to MANUAL and verify that rod motion stops.

A is incorrect; iwould be correct if the examinee incorrectly assumes an inadvertent dilution, listed symptoms do not support that assumption. (Rod motion OUT)

B is incorrect; action is something normally done when turbine load is not changing but temperature does, however, in this case it would not have the desired effect. Plausible if the applicant confuses symptoms.

C is incorrect; is the correct accident, however, the action stated is the RNO if rods do not cease moving once they have been placed in manual.

D. is correct for the stated situation.

First action is to place rods in Manual if they are stepping while in AUTO

Knowledge of the interrelations between the Continuous Rod Withdrawal and the following: Rod bank step counters

Question Number: 57

Tier 1 Group 2

Importance Rating: 2.8

Technical Reference: OPS 52201E, AOP-19.0
Proposed references to be provided to applicants during examination: None
Learning Objective:
10 CFR Part 55 Content: 41.5

Comments:

Source :	BANK	Source if Bank:	WBN BANK
Cognitive Level:	HIGHER	Difficulty:	
Job Position:	RO	Plant:	FARLEY
Date:	11/2007	Previous NRC?:	NO

A. **Purpose**

This procedure provides actions for response to a malfunction of the rod control system.

This procedure is applicable when the rod control system is capable of rod withdrawal.

B. **Symptoms or Entry Conditions**

I. This procedure is entered when a malfunction of the rod control system is indicated by any of the following:

a. Significant reactivity insertion due to unexplained rod motion

b. Failure of a control bank to move when required

NOTE:
- A rod is considered "dropped" if it has fallen completely to the bottom of the core. A rod is considered "misaligned" if its DRPI indication diasgrees with the group step counter demand position.
- Technical Specifications requires that all individual indicated rod positions be within 12 steps of their group step counter demand position.

---

c. One or more dropped rods in Mode 1 OR during reactor startup.

d. One or more rods misaligned in Mode 1 OR during reactor startup.

e. Complete loss of position indication for one or more rods

Step	Action/Expected Response	Response NOT Obtained
___ 1	**Verify NO load change in progress.**	1 Perform the following. 1.1 IF load rejection in progress, THEN place the turbine in MANUAL and go to FNP-1-AOP-17.0, RAPID LOAD REDUCTION. 1.2 IF steam leakage in progress, THEN go to FNP-1-AOP-14.0, SECONDARY SYSTEM LEAKAGE.
___ 2	**IF unexplained rod motion occurring, THEN stop rod motion.**	
2.1	IF rod control in AUTO, THEN place rod control in MANUAL.	2.1 IF unexplained rod motion NOT stopped, THEN trip the reactor and go to FNP-1-EEP-0, REACTOR TRIP OR SAFETY INJECTION.

NOTE: In AUTO rod control, rods will step OUT if TAVG less than TREF by at least 1.5 degrees, and Rods will step IN if TAVG greater than TREF by at least 1.5 degrees.

2.2	IF rod control in Manual, THEN place rod control in AUTO.	2.2 IF AUTO rod motion due to TAVG/TREF mismatch, THEN verify rod motion stops when TAVG is within 1 degree of TREF.
___ 3	**IF unexplained rod motion NOT stopped, THEN trip the reactor and go to FNP-1-EEP-0, REACTOR TRIP OR SAFETY INJECTION.**	

___Page Completed

Step	Action/Expected Response	Response NOT Obtained
___ 1	**Verify NO load change in progress.**	1 Perform the following. 1.1 IF load rejection in progress, THEN place the turbine in MANUAL and go to FNP-1-AOP-17.0, RAPID LOAD REDUCTION. 1.2 IF steam leakage in progress, THEN go to FNP-1-AOP-14.0, SECONDARY SYSTEM LEAKAGE.
___ 2	**IF unexplained rod motion occurring, THEN stop rod motion.**	
	2.1 IF rod control in AUTO, THEN place rod control in MANUAL.	2.1 IF unexplained rod motion NOT stopped, THEN trip the reactor and go to FNP-1-EEP-0, REACTOR TRIP OR SAFETY INJECTION.

NOTE: In AUTO rod control, rods will step OUT if TAVG less than TREF by at least 1.5 degrees, and Rods will step IN if TAVG greater than TREF by at least 1.5 degrees.

	2.2 IF rod control in Manual, THEN place rod control in AUTO.	2.2 IF AUTO rod motion due to TAVG/TREF mismatch, THEN verify rod motion stops when TAVG is within 1 degree of TREF.
___ 3	**IF unexplained rod motion NOT stopped, THEN trip the reactor and go to FNP-1-EEP-0, REACTOR TRIP OR SAFETY INJECTION.**	

___Page Completed

2. 001 K5.36 001/NEW//LOWER//RO/FARLEY/11/2007/NO

The plant is at 100% power, steady state.

Which ONE of the following describes how a load change is performed to reduce power to 80% at MOL? (Consider the ramp down and the first 4 hours after the load change is complete). Borate or insert rods to: _____.

A. offset the positive reactivity due to change in power defect while decreasing turbine load; subsequently insert control rods or borate to maintain Tavg on program due to Xenon burnout.

B. control the temperature change caused by the turbine load decrease and negative reactivity inserted by power defect; subsequently insert control rods or borate to maintain Tavg on program due to Xenon burnout.

C. offset the positive reactivity due to change in power defect while decreasing turbine load; subsequently withdraw control rods or dilute to maintain Tavg on program due to Xenon build-in.

D. control the temperature change caused by the turbine load decrease and negative reactivity inserted by power defect; subsequently withdraw control rods or dilute to maintain Tavg on program due to Xenon build-in.

A is incorrect because they refer to xenon burnout, whereas it builds in. Credible because the candidate must understand the effect of xenon and it does change after a load change.

B is incorrect because they refer to xenon burnout, whereas it builds in. Credible because the candidate must understand the effect of xenon and it does change after a load change.

C is correct. Power defect adds positive reactivity for a negative change in load. Xenon adds negative reactivity for the first several hours following a load change because production is higher than removal.

D is incorrect because decreasing power will add positive reactivity due to power defect. Credible because if it did add negative reactivity, the actions would be credible.

Knowledge of the following operational implications as they apply to the CRDS: Significance of sign (always minus) of a calculated power defect

Question Number: 29

Tier 2 Group 2

Importance Rating: 3.1

Technical Reference: T&AA, CORE PHYSICS CURVEs pcb-1-vol1-crv27, 34 & 60
Proposed references to be provided to applicants during examination: None
Learning Objective:
10 CFR Part 55 Content: 41.1

Comments:

Source :	NEW	Source if Bank:	
Cognitive Level:	LOWER	Difficulty:	
Job Position:	RO	Plant:	FARLEY
Date:	11/2007	Previous NRC?:	NO

UNIT 1 CYCLE 21 CURVE 27
Power Defect vs. Boron Concentration and Burnup

REV. 23

APPROVED: [signature] 4-26-04
ENGINEERING SUPPORT MANAGER DATE

Burnup (MWD/MTU)	HFP, ARO Eq. Boron Conc., ppm	HFP Power Defect (pcm)	50% RTP Defect (pcm)
0	1174	-1255	-665
1000	1187	-1238	-658
2000	1222	-1196	-632
3000	1235	-1166	-608
4000	1223	-1186	-615
6000	1150	-1269	-658
8000	1033	-1397	-729
10000	891	-1551	-819
12000	733	-1719	-916
14000	566	-1892	-1013
16000	395	-2064	-1106
18000	224	-2235	-1196
20000	55	-2402	-1280
20600	5	-2453	-1304

Instructions:

1. For powers between 50% and 100%, interpolate between the 50% and 100% values. For powers less than 50%, interpolate between zero pcm and the 50% value.
2. If available, burnup should be used to determine power defect.
3. If boron concentration is used instead of burnup, the boron sample should correlate to HFP, ARO, Equilibrium Xe and Sm conditions. **Do not use boron to interpolate for less than HFP conditions.**
4. Assuming no borations due to power reductions or trips, equate the sample results to the ADJUSTED column in CURVE 1. Use the corresponding NOMINAL value in CURVE 1 as the value for boron in CURVE 27 above.

UNIT 1 CYCLE 21 CURVE 34
MOL Integral Worth vs. Steps Withdrawn of Banks C and D Moving in Overlap
HZP, No Xenon

REV. 41

APPROVED: Stephen Thomas 4-24-06
ENGINEERING SUPPORT MANAGER DATE

MOL (5000 -15000 MWD/MTU)									
Steps	Worth (pcm)		Steps	Worth (pcm)		Steps	Worth (pcm)		Steps	Worth (pcm)
D231	0		D199	170		D173	377		D147	515
D230	0		D198	179		D172	384		D146	520
D229	1		D197	188		D171	390		D145	524
D228	1		D196	197		D170	396		D144	529
D227	3		D195	206		D169	402		D143	533
D226	5		D194	215		D168	408		D142	537
D225	7		D193	224		D167	414		D141	541
D224	9		D192	233		D166	420		D140	546
D223	12		D191	241		D165	425		D139	550
D222	14		D190	250		D164	431		D138	554
D221	16		D189	258		D163	437		D137	558
D220	18		D188	267		D162	442		D136	563
D219	23		D187	275		D161	447		D135	567
D218	27		D186	283		D160	453		D134	571
D217	32		D185	291		D159	458		D133	575
D216	37		D184	299		D158	463		D132	579
D215	43		D183	306		D157	468		D131	583
D214	50		D182	314		D156	473		D130	587
D213	56		D181	321		D155	478		D129	591
D212	62		D180	329		D154	483		D128	595
D211	70		D179	336		D153	488		D127	600
D210	77		D178	343		D152	492		D126	604
D209	85		D177	350		D151	497		D125	608
D208	92		D176	357		D150	502		D124	612
D207	101		D175	364		D149	506		D123	616
D206	109		D174	370		D148	511		D122	620
D205	117									
D204	126									
D203	135									
D202	144									
D201	152									
D200	161									

Total worth of Shutdown Banks is **-3422** pcm
Total worth of the Control Banks is **-4712** pcm
Total worth of all banks is **-8134** pcm
Conservative worth of most reactive rod (M-4 at EOL) is **-1534** pcm

UNIT 1 CYCLE 21 CURVE 60
Xenon Worth vs. Time Following Plant Trip
at Various Burnups After Steady State Operation
at Various Power Levels

REV. 26

APPROVED: Stephen J. Chernut 4-24-06
ENGINEERING SUPPORT MANAGER DATE

MOL (5000 - 15000 MWD/MTU)

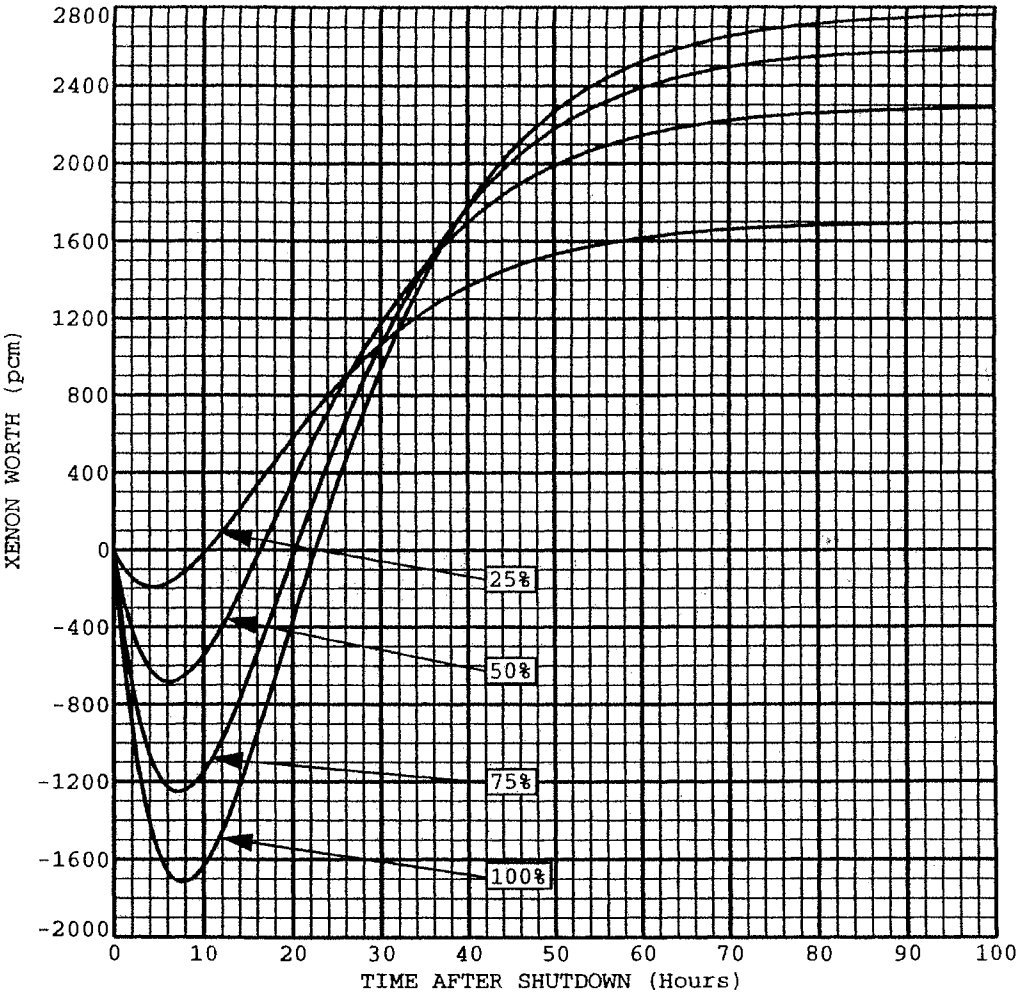

XENON WORTH (pcm)

POWER LEVEL	TIME (HOURS) 8	25	45	80	100
25%	-111	844	1461	1682	1698
50%	-649	798	1865	2259	2287
75%	-1243	557	2005	2549	2587
100%	-1715	331	2061	2716	2762

3. 002 K3.02 001/NEW//LOWER//RO/FARLEY/11/2007/NO

Cold Leg Recirculation is aligned following a design basis Large Break LOCA. What would be the result of maintaining Cold Leg Recirculation for 30 days after the event AND **NOT** aligning simultaneous Hot & Cold Leg Recirc?

A. Fuel heat transfer would remain constant & Flow through the core would decrease

B. Fuel heat transfer would decrease & Flow through the core would remain constant

C. Fuel heat transfer & Flow through the core would remain constant

D. Fuel heat transfer & Flow through the core would decrease

A. Incorrect. Plausible because the RHR cooling does help ensure a coolable core geometry is maintained, but the boron plating reduces the cooling surface at the hot leg end of the fuel unless simultaneous hot/cold leg recirc is established 7.5 hours after the LBLOCA even occurs

B. Incorrect. Plausible because the RHR cooling does help ensure a long term core cooling for 30 days is maintained, but the boron plating reduces the cooling surface at the hot leg end of the fuel unless simultaneous hot/cold leg recirc is established 7.5 hours after the LBLOCA even occurs

C. Incorrect. Plausible because with RHR flow, cooling will be maintained, but the boron plating requires simultaneous hot and cold leg recirc is required 7.5 hours after the LOCA

D. Correct. simultaneous hot and cold leg recirc is required 7.5 hours after the LOCA to prevent boron from plating out on the fuel at the upper part of the core. Plating out would reduce flow in the core, insulate the fuel which would decrease heat transfer, and reduces boron concentration in the containment sump water.

Knowledge of the effect that a loss or malfunction of the RCS will have on the following: Fuel

Question Number: 30

Tier 2 Group 2

Importance Rating: 4.2

Technical Reference: OPS-52102B
Proposed references to be provided to applicants during examination: None
Learning Objective:
10 CFR Part 55 Content: 41.7

Comments:

Source :	NEW	Source if Bank:	
Cognitive Level:	LOWER	Difficulty:	
Job Position:	RO	Plant:	FARLEY
Date:	11/2007	Previous NRC?:	NO

flow through the core and degrade the heat transfer capability of the fuel. This would also result in a depletion of the boron concentration in the recirculated fluid from the sump.

The intent of achieving simultaneous cold and hot leg recirculation is to have EITHER RHR aligned to the hot legs with at least one train of HHSI aligned to the cold legs OR RHR aligned to the cold legs with at least one train of HHSI aligned to the hot legs.

SIMULTANEOUS COLD AND HOT LEG RECIRCULATION

Following a loss of coolant accident (LOCA), emergency core cooling is accomplished by means of the charging and residual heat removal (RHR) pumps. The charging system provides the function of high head safety injection (HHSI) and the RHR pumps provide the function of low head safety injection (LHSI). Initially, these pumps operate by injecting water from the refueling water storage tank (RWST) into the reactor via the reactor coolant system (RCS) cold legs (See Figure 14). The injection mode continues until a low level in the RWST is reached. At that point the operator then manually aligns the emergency core cooling system (ECCS) to the cold leg recirculation mode of operation (See Figure 15). During this mode the system is aligned to take water from the containment sump, cool it in the RHR heat exchangers and deliver it to the reactor core through the RCS cold legs. After approximately 7.5 hours the system was aligned to the hot leg recirculation mode where the point of delivery is switched from the RCS cold legs to the RCS hot legs. This is done to ensure there was no boron precipitation in the reactor following boiling in the core after a large break LOCA. Excessive boron precipitation may result in a change in core geometry which is not amenable to cooling or results in reduced heat transfer capability such that heat cannot be removed for the extended period of time required by long-lived radioactivity remaining in the core. The Farley Nuclear Plant (FNP) procedures previously called for alternating the delivery point of reactor coolant between the hot legs and cold legs every 13 hours. A safety evaluation was performed to document the acceptability of eliminating the requirement to alternate flow delivery between the hot legs and cold legs if the systems are aligned to deliver flow simultaneously to the cold legs and hot legs (See Figure 16). It was shown that the core can be maintained in a coolable geometry and adequately cooled if either the RHR pump(s) are aligned to the hot legs and

charging/SI pump(s) to the cold legs or the RHR pump(s) are aligned to the cold legs and the charging/SI pump(s) to the hot legs.

Evaluation

Procedure Modifications

The two NSAL's (92-010 and 93-012) which this change to plant operations addresses cover the following concerns. First, the LHSI has a single hot leg flow path that contains normally closed train B isolation valve MOV8889. Therefore, a single failure can prevent establishing LHSI hot leg recirculation. In this case the HHSI should be transferred to hot leg recirculation and LHSI should be aligned for cold leg recirculation. Second, the HHSI is automatically aligned for cold leg injection through parallel, normally closed train A and B isolation valves MOV8803A and MOV8803B. If there is a failure of train B after these valves have opened then the following conditions arise: a) The B LHSI and HHSI pumps stop, b) Valve 8803B cannot be closed to isolate cold leg recirculation and therefore the train A HHSI pump cannot be aligned for hot leg recirculation, and c) MOV8889 cannot be opened and therefore LHSI hot leg recirculation cannot be initiated. This results in the inability to initiate any hot leg recirculation.

The revisions addressed by this procedure (ESP-1.4, Simultaneous Cold and Hot Leg Recirculation) enhance the ability of the operator to mitigate several postulated single failures. The failure of MOV8889 to open during switchover of the LHSI to hot leg recirculation can be mitigated by aligning the LHSI to cold leg recirculation and aligning the HHSI to hot leg recirculation. The failure of MOV8803B to close during the switchover of train A HHSI pump to hot leg recirculation can be mitigated by aligning A train HHSI pump to cold leg recirculation and either the B train HHSI pump or the LHSI pumps to hot leg recirculation. The failure of electrical train B coincident with the initiating event prevents MOV8803B from automatically opening on the S-signal and prevents MOV8889 from being remote manually opened during switchover to hot leg recirculation. This failure can be mitigated by aligning the A train LHSI pump to cold leg recirculation and the A train HHSI pump to hot leg recirculation. The postulated failure of electrical train B after the injection mode has been established and before the switchover to the recirculation mode has begun is not mitigated by the procedure changes

considered herein. However, the probability of this failure is much lower than the other failures which are addressed by this evaluation since it must occur in a specific and limited (on the order of one hour or less based on RWST draindown) time interval coincident with the event. In addition, this potential failure is an existing condition and is not exacerbated by the proposed changes. The proposed changes are an interim measure to address the more probable postulated single failures until a design change can be implemented to address all of the postulated single failures.

LOCA Evaluation

The following evaluation justifies acceptability of either a) RHR/LHSI flow to the cold legs and charging/SI flow to the hot legs or b) RHR/LHSI flow to the hot legs and charging/SI flow to the cold legs. Large breaks in a cold leg, hot leg, and crossover leg are considered.

Large Cold Leg Break

If LHSI flow is delivered to the cold legs and HHSI flow to the hot legs, then the ECCS flow to the RCS cold legs from the RHR/LHSI is much larger than the flow to the RCS hot legs from the charging/SI pumps. However, the absence of a break in the hot legs will allow the charging/SI pumps to build up an inventory, and hence a static head, in the steam generators to overcome the vessel downcomer head and any pressure drop imposed by the RHR/LHSI. Once sufficient static head is developed by the charging/SI, the core inventory will be reverse flushed out the cold leg break resulting in dilution of the core boron. Since the charging/SI flow exceeds decay heat boil-off by more than 30% the dilution process will be effective with a minimum amount of mixing between the core inventory and the charging/SI flow. Further, the charging/SI flow has been shown to be adequate for core cooling since all of the flow will be forced through the core. Therefore, simultaneous injection into the RCS hot legs at 1.3 times decay heat boiloff and cold legs at 1.5 times decay heat boiloff will provide for adequate core cooling at FNP. This result also allows for the RHR/LHSI to be aligned to the RCS hot legs and the HHSI to be aligned to the RCS cold legs.

Large Hot Leg Break

In this case, the flow through the core is much larger than for the cold leg break due to the lower hydraulic resistance to flow out the break location. Thus, hot leg breaks have large flooding rates and tend to quench the core early in reflood, usually prior to switch over to cold leg recirculation. The quenching of the core maintains core subcooling and reduces core steaming. Therefore, the boron concentration in the core will not build up due to boiling which is terminated early due to the early quench and the RHR/LHSI flow to the cold legs which tends to forward flush the core. Alignment of the charging/SI to the hot legs will not impede the flow through the core from the RHR/LHSI since an offsetting head cannot be built up due to spill to containment of hot leg flow through the break. This argument also applies if the injection location for the pumps was reversed since the flow to the cold legs exceeds 1.5 times decay heat boiloff.

Large Crossover Leg Break

These breaks are bounded by the previous discussion on large cold and hot leg breaks.

ECCS Flow Verification

Westinghouse has calculated the minimum required cold leg and hot leg flow rates for FNP at the time of switchover to hot leg recirculation. The required flow rates are documented in section 6.1.3 of the Farley Uprate Licensing Report (WCAP-14723). The methodology of NSAL-92-010, transmitted via letter ALA-93-505, was applied. The minimum required flow to the hot legs is 1.3 times decay heat boiloff at 7.5 hours after the assumed break. Based on a reactor core power of 2775 MWt this corresponds to 35.1 lb_m/sec or 262.8 gal/min. The minimum flow delivered to the hot legs by the charging/SI pumps is 548.8 gpm (73.3 lb_m/sec) following a cold leg break. The minimum flow delivered to the hot legs by the RHR pumps is 3722.2 gpm (497.2 lb_m/sec) following a cold leg break. The minimum required flow to the cold legs is 1.5 times decay heat boiloff at 7.5 hours after the assumed break. Based on a reactor core power of 2775 MWt this corresponds to 40.5 lb_m/sec or 303.2 gal/min. The minimum flow delivered to the cold legs by the charging/SI pumps is 542.6 gpm (72.5 lb_m/sec) following a hot

leg break. The minimum flow delivered to the cold legs by the RHR pumps is 3487.2 gpm (467.7 lb_m/sec) following a hot leg break.

Alternating Between the Hot Leg and Cold Leg Recirculation Alignments

The discussion provided above demonstrates that alternating between the hot leg and cold leg recirculation configurations is not required at FNP once simultaneous hot and cold leg recirculation is established. While alternating will not result in any deleterious effect on core cooling or result in boron precipitation, alternating will not enhance the ability of the ECCS to cool the core. Further, alternating between these ECCS configurations increases the chance for operator or equipment failure and subsequent reduction in core cooling capacity. Therefore, alternating the ECCS between hot leg and cold leg recirculation is not recommended for FNP.

Conclusion

Based on calculations for the post-accident recirculation mode of operation, adequate flow exists for core cooling. Hot and cold leg recirculation with either alignment provides adequate core cooling. Moreover, once simultaneous hot and cold leg recirculation is established there is not need to alternate alignments.

ACCIDENT OPERATION

The safety injection "S" signal for injection of borated water by the emergency core cooling system will be actuated by any of the following:

a. Low pressurizer pressure (2/3; $\leq$1850 psig)

b. High containment pressure (2/3; $\geq$4 psig)

c. High steam line differential pressure (1 SG 100 psid lower than the other two SGs on 2/3 protection sets)

d. Low steam line pressure (2/3 SGs pressure $\leq$585 psig) as seen by 1 pressure detector per SG

e. Manual (1/2)

All of the ECCS components will automatically actuate upon receipt of the "S" signal. The associated unit diesels will start regardless of whether or not an LOSP has occurred.

4. 003 A1.04 001/NEW//HIGHER//RO/FARLEY/11/2007/NO

Agree if the question is worded so that the applicant knows the act CCW leak into the

Given the following:

- Unit 1 is in Mode 4.
- RCP 1A has just been started.

If a CCW leak were occurring in the RCP bearing oil cooling system, which ONE of the following alarms will be received, and what is the minimum temperature at which a pump trip is required?

A. HG1, RCP 1A BRG UPPER/LOWER OIL RES HI LVL; the RCP must be tripped when any motor bearing temperature exceeds 302 degrees F.

B. HG1, RCP 1A BRG UPPER/LOWER OIL RES HI LVL; the RCP must be tripped when any motor bearing temperature exceeds 195 degrees F.

C. HH1, RCP 1A BRG UPPER/LOWER OIL RES LO LVL; the RCP must be tripped when any motor bearing temperature exceeds 302 degrees F.

D. HH1, RCP 1A BRG UPPER/LOWER OIL RES LO LVL; the RCP must be tripped when any motor bearing temperature exceeds 195 degrees F.

A is incorrect due to temperature setpoint.

B is correct. CCW would leak in to the bearing oil reservoir because it is at a higher pressure

C is incorrect because the reservoir level will be high, not low.

D is incorrect because the reservoir level will be high, not low.

195 correct per ARP, 302 Plausible, because per ARP-1.10, KK5, Max safe temperature for RCP Motors is 302°F.

Ability to predict and/or monitor changes in parameters (to prevent exceeding design limits) associated with operating the RCPS controls including: RCP oil reservoir levels

Question Number: 1

Tier 2 Group 1

Importance Rating: 2.6

Technical Reference: HG1 & HH1 ARP-1.8, AOP-4.1
Proposed references to be provided to applicants during examination: None
Learning Objective:
10 CFR Part 55 Content: 41.5

Comments:

Source :	NEW	Source if Bank:	
Cognitive Level:	HIGHER	Difficulty:	
Job Position:	RO	Plant:	FARLEY
Date:	11/2007	Previous NRC?:	NO

LOCATION HG1

SETPOINT: 1.25 inches above Normal Level

ORIGIN: 1. Upper Reservoir: Level Switch LS-417
2. Lower Reservoir: Level Switch LS-419

G1	
	RCP 1A BRG UPPER/LOWER OIL RES HI LVL

PROBABLE CAUSE

1. Inleakage of Component Cooling Water.
2. Excessive heating of oil after pump start.
3. Instrument malfunction.

AUTOMATIC ACTION

NONE

OPERATOR ACTION

1. Continuously monitor 1A RCP bearing temperatures.

NOTE: WHEN transitioning to FNP-1-EEP-0.0 AND at the Shift Supervisors direction, it is ACCEPTABLE for one team member to complete the Immediate Operator Actions of FNP-1-EEP-0.0. While the other team member verifies a Reactor Trip, THEN trips the appropriate RCP(s) before finishing the Immediate Operator Actions of FNP-1-EEP-0.0. (AI 2004200019)

2. IF any 1A RCP motor bearing temperature exceeds 195°F, THEN perform the following actions:
   a) Trip the reactor, AND go to FNP-1-EEP-0.0, REACTOR TRIP OR SAFETY INJECTION.
   b) Stop 1A RCP.
   c) Perform the actions required by FNP-1-AOP-4.0, LOSS OF REACTOR COOLANT FLOW.
   d) Manually close pressurizer spray valve, PK 444C
3. At the direction of the Operations Manager, reduce power as necessary to permit a containment entry.
4. As soon as practical make a containment entry to determine the cause for the bearing oil reservoir high level and the extent of any damage.
5. IF instrument malfunction was the cause of the alarm, THEN perform the following actions:
   a) Notify appropriate personnel.
   b) Determine the cause and correct the instrument fault.
   c) Return the instrument to normal as soon as possible.

OPERATOR ACTION (cont.)

6. Correct the cause and any damage that has resulted.
7. Return the Reactor Coolant Pump to service as soon as possible.
8. IF the cause of the alarm can NOT be corrected AND a determination has been made to continue operating, THEN perform the following:
   8.1 Monitor the following parameters at an increased frequency to be determined by the Operations Shift Manager:
      1.1.1 CCW Surge Tank Level
      1.1.2 1A RCP bearing temperatures
   8.2 Initiate a CR for Maintenance to defeat the input from LS-417 or LS-419 to restore alarm capability for the LS that is not causing the alarm by jumpering the appropriate terminals in annunciator cabinet "1D" N1H25L040D-N per the following:

RESERVOIR	LEVEL SWITCH	TERMINALS	DRAWING A177100
Upper	N1B41LS0417	SP-37A (H61A) SP-37B (H61B)	Sh. 386
Lower	N1B41LS0419	SP-37B (H71A) SP-37C (H71B)	Sh. 386 & 391

   8.3. Initiate a second CR for Maintenance to remove the jumper installed per step 8.2 when the jumper is no longer required.
   8.4. Place caution tag stating which input to the alarm is defeated near annunciator window HG1. Caution tag cover sheet shall reference the CR in step 8.3.

References: A-177100, Sh. 386 and 391; A-181541 Sh. F-H and F-4; U-258242; D-175037, Sh. 3; U-266647 PLS Document

LOCATION HH1

H1
RCP 1A BRG UPPER/LOWER OIL RES LO LVL

SETPOINT: 1.25 inches below Normal Level

ORIGIN: 1. Upper Reservoir: Level Switch LS-417
2. Lower Reservoir: Level Switch LS-419

PROBABLE CAUSE

1. Sight glass rupture.
2. Oil Leakage.
3. Instrument malfunction.

AUTOMATIC ACTION

NONE

OPERATOR ACTION

1. Continuously monitor 1A RCP bearing temperatures.

NOTE: WHEN transitioning to FNP-1-EEP-0.0 AND at the Shift Supervisors direction, it is ACCEPTABLE for one team member to complete the Immediate Operator Actions of FNP-1-EEP-0.0. While the other team member verifies a Reactor Trip, THEN trips the appropriate RCP(s) before finishing the Immediate Operator Actions of FNP-1-EEP-0.0. (AI 2004200019)

2. IF any 1A RCP motor bearing temperature exceeds 195°F, THEN perform the following actions:
   a) Trip the reactor, AND go to FNP-1-EEP-0.0, REACTOR TRIP OR SAFETY INJECTION.
   b) Stop 1A RCP.
   c) Perform the actions required by FNP-1-AOP-4.0, LOSS OF REACTOR COOLANT FLOW.
   d) Manually close pressurizer spray valve, PK 444C.
3. Generate a condition report to document the time of the initial alarm.
4. Start an admin tracking sheet to document anytime the alarm clears and for any future alarms.

LOCATION KK5

REACTOR COOLANT PUMP MOTOR TEMPERATURES (°F)			
		ALARM SET POINT	MFG. MAX. SAFE TEMP
1A	PHASE 1	275	302
	PHASE 2	280	302
	PHASE 3	260	302
1B	PHASE 1	270	302
	PHASE 2	270	302
	PHASE 3	260	302
1C	PHASE 1	270	302
	PHASE 2	270	302
	PHASE 3	270	302

CONDENSATE PUMP MOTOR TEMPERATURES (°F)			
		ALARM SET POINT	MFG. MAX. SAFE TEMP
1A	PHASE 1	275	311
	PHASE 2	275	311
	PHASE 3	275	311
1B	PHASE 1	275	311
	PHASE 2	275	311
	PHASE 3	275	311
1C	PHASE 1	275	311
	PHASE 2	275	311
	PHASE 3	275	311

References: D-170280, Rev. 3; U-214849; U-161114; Phase 1 Test Result Data Sheet, Doc. no. 020650304-312; MWR 159048

5. 003 K5.03 001/BANK/FARLEY/LOWER//RO/FARLEY/11/2007/NO

Unit 1 is at 6% reactor power.

Which ONE of the following describes the response of the affected loop Tavg and the reason for the response if 1B RCP trips?

A. 1B Loop Tavg will decrease due to the reverse flow in the loop.

B. 1B Loop Tavg will increase due to the increased transient time of the flow from the core to B Loop.

C. 1B Loop Tavg will decrease due to heat removal from that loop remaining constant without heat input from the 1B RCP.

D. 1B Loop Tavg will increase due to increased core temperatures caused by reduced heat removal in the loop.

A Correct; Tavg will initially decrease due to reverse flow, which occurs when the B Loop RCP is tripped.

B. Incorrect; because B Loop Tavg will not increase.
Plausible because a misconception could exist where the applicant may believe that the coolant may have a longer transit time through the core in the forward direction, which would cause Thot to increase, thus increasing Tavg.

C. Incorrect; Tavg will decrease but not due to imbalance of heat removal.

D. Incorrect; will not increase.

OPS- 52520D
If the reactor is less than 30% power and there is a loss of coolant flow in one loop (two or more loops if below 10% power), the operator must respond in an efficient manner in order to minimize the effects on primary and secondary systems. In the loop that has lost coolant flow, temperatures will stabilize at approximately the cold leg temperature (TC) of the unaffected loop(s). This will drop the saturation temperature and pressure of the affected loop's steam generator (SG), causing SG level to drop (shrink), and will also reduce the amount of steaming and power output from the affected SG to a minimum.

Knowledge of the operational implications of the following concepts as they apply to the RCPS: Effects of RCP shutdown on T-ave., including the reason for the unreliability of T-ave. in the shutdown loop

Question Number: 2

Tier 2 Group 1

Importance Rating: 3.1

Technical Reference: OPS 52520D
Proposed references to be provided to applicants during examination: None
Learning Objective:
10 CFR Part 55 Content: 41.7

Comments:

Source :	BANK	Source if Bank:	FARLEY
Cognitive Level:	LOWER	Difficulty:	
Job Position:	RO	Plant:	FARLEY
Date:	11/2007	Previous NRC?:	NO

AOP-4.0, LOSS OF REACTOR COOLANT FLOW

INTRODUCTION

This lesson addresses operator actions necessary to respond to a loss of reactor coolant flow that does not result in a reactor trip and/or a reactor trip is not required. The actions taken will be determined by the resulting plant conditions following the transient. If a loss of reactor coolant flow results in a reactor trip, then the operator will go directly to the EEP-0, "Reactor Trip or Safety Injection." If the loss of coolant flow does not cause a reactor trip in Mode 1 or if the loss of coolant flow occurs while in Modes 2 - 4, the operator will carry out the required actions in accordance with AOP-4.0, "Loss of Reactor Coolant Flow."

DETAILED DESCRIPTION

Partial Loss of Flow

A reactor trip signal is generated if either of the following conditions occurs: a loss of coolant flow occurring in one loop if reactor power is greater than 30% (P-8) or a loss of coolant flow in two loops if reactor power is greater than 10% (P-7). For a discussion on the plant response and operator actions expected, refer to lesson plans OPS-52530A, "EEP-0, Reactor Trip or Safety Injection," and OPS-52531B, "ESP-0.1, Reactor Trip Response."

If the reactor is less than 30% power and there is a loss of coolant flow in one loop (two or more loops if below 10% power), the operator must respond in an efficient manner in order to minimize the effects on primary and secondary systems. In the loop that has lost coolant flow, temperatures will stabilize at approximately the cold leg temperature (T_C) of the unaffected loop(s). This will drop the saturation temperature and pressure of the affected loop's steam generator (SG), causing SG level to drop (shrink), and will also reduce the amount of steaming and power output from the affected SG to a minimum.

Assuming reactor power hasn't changed, the core ΔT must increase to compensate for the reduced mass flow rate through the core. This means that the unaffected loop's hot leg temperature(s) (T_H) increases and cold leg temperature(s) (T_C) remains relatively stable. This

6. 004 A4.05 001/NEW//HIGHER//RO/FARLEY/11/2007/NO

Given the following:

- Unit 1 is in Mode 5.
- Solid plant operations are in progress.
- Letdown Pressure Control Valve PCV-145 is in MANUAL.
- The UO lowers the demand of PCV-145.

Which ONE (1) of the following describes the effect on the unit?

A. PCV-145 throttles open; RCS pressure rises.

B. PCV-145 throttles closed; RCS pressure rises.

C. PCV-145 throttles open; RCS pressure lowers.

D. PCV-145 throttles closed; RCS pressure lowers.

A is incorrect because RCS pressure will not rise.

B is incorrect because the valve will open, not close. Distractor is credible because changing demand does change valve position, and it is easy to associate lowering demand with valve closure

C is correct. Reducing the demand of PCV-145 in manual will cause the valve to open, reducing backpressure on the letdown line, therefore reducing RCS pressure upstream.

D is incorrect because the valve will open, not close. Distracter is credible because changing demand does change valve position, and it is easy to associate lowering demand with valve closure

Ability to manually operate and/or monitor in the control room: Letdown pressure and temperature control valves

Question Number: 4

Tier 2 Group 1

Importance Rating: 3.6

Technical Reference: CVCS LP OPS-52101F
Proposed references to be provided to applicants during examination: None
Learning Objective:
10 CFR Part 55 Content: 41.5

Comments:

Source :	NEW	Source if Bank:	
Cognitive Level:	HIGHER	Difficulty:	
Job Position:	RO	Plant:	FARLEY
Date:	11/2007	Previous NRC?:	NO

Excess Letdown Flow Control Valve (HCV-137)

This valve is controlled by REMOTE/MANUAL setpoint station HIK-137. Fully open corresponds to a station setpoint setting of 0%.

Seal Injection Flow Control Valve (HCV-186)

This valve is controlled by REMOTE/MANUAL setpoint station HIK-186. Fully open corresponds to a station setpoint setting of 100%.

Letdown Heat Exchanger Discharge Temperature Control Valve TV-3083 (also called TCV-144 and TCV-3083)

The control valve is controlled from a MANUAL/AUTO (MA) station TK-144. In AUTO control, the MA station potentiometer should be set at 3.30, which corresponds to 100°F. The setpoint is variable from 50°F to 200°F (which corresponds to 0.0 to 10.0 on the potentiometer). In MANUAL control, an output of 100% corresponds to the valve being fully closed. Both Unit's have procedural guidance for controlling Letdown Temperature on TV-3083 manual bypass valve OR by placing TV-3083 operator on the manual jacking device.

Pressure Control Valve (PCV-145)

This valve is controlled by MA station PK-145. In AUTO control, the MA station should be set to maintain between 260 and 450 psig. The setpoint is variable from 0 to 600 psig (which corresponds to 0.0 to 10.0 on the potentiometer). In MANUAL control, a controller output of 100% corresponds to the valve being fully closed.

VCT Level Controller

VCT level is controlled by MA station LK-112 by controlling the position of valve LCV-115A. In AUTO, the divert setpoint may be varied from 0 to the 100% level (which corresponds to

7. 004 K2.01 001/NEW//LOWER//RO/FARLEY/11/2007/NO

Which ONE of the following states the power supply to Boric Acid Transfer Pump "A"?

A. 208 Volt MCC D

B. 208 Volt MCC E

C. 600 Volt MCC A

D. 600 Volt MCC E

A is incorrect. Plausible because it supplies power to CVCS components: 1A Charging pump Aux Lube Oil pump

B is incorrect. Plausible because it supplies power to CVCS components: 1B and 1C Charging pump Aux Lube Oil pumps

C is correct.

D is incorrect. Plausible because it supplies power to CVCS components: 1A Reactor Coolant Drain Tank pump, RCP Seal Inj. MOV 8105

Knowledge of bus power supplies to the following: Boric acid makeup pumps

Question Number: 3

Tier 2 Group 1

Importance Rating: 2.9

Technical Reference: OPS 52101L, F, & G, FNP-Unit 1 Load List A-506250
Proposed references to be provided to applicants during examination: None
Learning Objective:
10 CFR Part 55 Content: 41.5

Comments:

Source :	NEW	Source if Bank:	
Cognitive Level:	LOWER	Difficulty:	
Job Position:	RO	Plant:	FARLEY
Date:	11/2007	Previous NRC?:	NO

DD09
EB04
FDJ5L
1D 208V MCC SECTION AB-121' B177556-4C

BKR	TPNS	DESCRIPTION
	N1R17B0004-N	**1D 600/208V MCC (208V SECTION) <<< FDJ5L**
HDK2L	N1V47M0021-N	DISC. SWITCH N1R18S0534-N >>> SAMPLE ROOM AHU
HDK2R	N1F15M0005-N	RCC CHNG FXTR HOIST DRIVE STARTER
HDK3	N1P41M0002-N	CTMT ELEVATOR MACH RM PROPELLER FAN
HDK4L	N1P15G0001-N	SAMPLE SYSTEM CONDENSATE RETURN UNIT
HDK4R	N1V46K0006D-N	1D ELECT PENET RM CONDENSING UNIT
HDK5	----------	SPARE
HDK6	----------	SPARE
HDK7	----------	SPARE
HDL2	----------	SPARE
HDL3	----------	SPARE
HDL4	----------	SPARE
HDL5	N1E21M0008A-N	1A CHARGING/HHSI PUMP AUX LUBE OIL PUMP 1A
HDL6	----------	SPARE
HDL7	N1E21M0009-N	BORIC ACID BATCHING TK AGITATOR
HDN2	N1V47M0004-N	CABLE SPREADING RM AHU
HDN3L	----------	SPARE
HDN3R	----------	SPARE
HDN4L	N1P15NFSSS2613B -N	SAMPLE SYSTEM CHILLED WATER UNIT
HDN4R	N1V46K0006C-N	1C ELEC PENET RM CONDENSING UNIT
HDN5	N1G21MOV3394-N	CTMT SUMP PUMP DISCH MOV

DD09
EB04
FJD5L
1D 600/208V MCC **AB-121'** **B177556-4C**
(CONT'D)

BKR	TPNS	DESCRIPTION	SEE PAGE
HDN6L	**N1C11L0008-N**	**ROD POSITION INDICATION DIST PNL >>>**	D-97
HDN6R	**N1R19L0001G-N**	**1G SPACE HEATERS DIST PANEL >>>**	D-98
HDO3	----------	MCC SPACE HTRS BKR COMPT	
HDO4L	**N1R19L0003N-N**	**1N 208/120V AC CONTROL POWER PANEL>>>**	D-99
HDO4R	N1V43G0087-N	MOTOR OPERATED FIRE DOOR NO. 432	
HDO5L	N1V19K0003-N	WASTE EVAP CONDEN RET UNIT ELEC PNL	
HDO5R	----------	SPARE	
HDO6L	----------	SPARE	
HDO6R	N1V19K0004-N	RECYCLE EVAP CONDEN RET UNIT ELEC PNL	
HDO7L	**N1R19L0001C-N**	**1C SPACE HEATERS DIST PANEL>>>**	D-101
HDO7R	**N1R19L0001K-N**	**1Q SPACE HEATERS DIST PANEL>>>**	D-102

tank has no diaphragm membrane. For this reason, reactor makeup water is the preferred water source when batching boric acid. Water addition to the batching tank is controlled locally by operation of manual valves. The tank can be drained to the waste processing system drain header.

Instrumentation associated with the batching tank ensures proper level and temperature of the tank. TIS-100 gives a high and low alarm at 120°F and 70°F, respectively. LT-101 provides local level indication.

Boric Acid Transfer Pumps

The transfer pumps are horizontal, centrifugal, single speed, 40-horsepower (hp) pumps powered from 600V MCC A and B, respectively. These pumps can be controlled manually from the MCB or automatically by the reactor coolant makeup system. In addition to the automatic actuation by the makeup control system and manual actuation from the main control board, these pumps may also be controlled locally at the hot shutdown panels (HSP). Miniflow protection for the boric acid pumps is provided by recirculating boric acid solution back to the tanks. Flow orifices are placed in each recirculation line, thus giving a 10 gpm flow from the pumps to the BATs when recirculating on miniflow. This will ensure a sufficient backpressure to the pumps to supply required flow while providing miniflow protection during low or no flow conditions. When transferring the contents of the batching tank to the BATs, manual valves parallel with the flow orifices are open to allow 75 gpm flow (design flow rate per pump).

With the valve lineup properly arranged, one of the two transfer pumps takes a suction on the batching tank to transfer a fresh batch of 4 to 4.4 weight percent (w/o) boric acid to the boric acid tanks. These pumps can also be aligned to take suction from the boric acid tanks and discharge either to the CVCS or back to the boric acid tanks.

Local pressure indication is provided on the discharge of each pump.

Boric Acid Filter

The boric acid filter removes solids and boric acid crystals from solution before delivery to the reactor makeup system. The filter has a 25 micron disposable element and can not be bypassed. The filter is replaced when the differential pressure becomes excessive (20 psid). Local pressure indication is provided before and after the filter for differential pressure determination.

TABLE 3
POWER SUPPLIES

LOAD	Control Power	Power Supply	Power Supply Normal Source	Power Supply Alternate Source	Power Supply Emergency Source
Charging Pump A	125 VDC Panel B	4160V F	S/U 1(2) A	S/U1(2) B	1/2A D/G
Charging Pump B	125 VDC Panel B or E	4160V F or G	F-S/U 1(2)A G-S/U 1(2)B	F-S/U1(2) B G-S/U 1(2)A	F-1/2A D/G G-1B(2B)D/G-
Charging Pump C	125 VDC Panel E	4160V G	G-S/U 1(2)B	G-S/U 1(2)A	G-1B(2B)D/G
Chg Pump A Aux Lube Oil Pump		208V MCC D			
BCMS		600V MCC B			
Chg Pump B Aux Lube Oil Pump		208V MCC E			
Chg Pump C Aux Lube Oil Pump		208V MCC E			
Seal Water Injection Filter Isolation (8105)		600V MCC E			
Chg Pumps to Regenerative Hx (8107)		600V MCC U			
Chg Pump to Disch Hdr (8132A)		600V MCC U			
Chg Pump to Disch Hdr (8133A)		600V MCC U			
Chg Pump to Suct Hdr Isolation (8130A)		600V MCC U			
VCT Outlet Isolation (LCV-115C)		600V MCC U			
RWST to Chg Pump Hdr (LCV-115B)		600V MCC U			
RCP Seal Water Return Isolation Valve (8112)		600V MCC U			

DD08
EA05
1E 600/208V MCC **AB - 100'** **B177556-5**

BKR	TPNS	DESCRIPTION	SEE PAGE
	N1R17B0005-N	**1E 600/208V MCC (600V SECTION) <<< EA05**	
FEA3	N1P20M0001B-N	1B AUX STEAM CONDENSATE PUMP	
FEA4L	N1TB0017	1B 600V RECEPTACLES TERM BOX	
FEA4R	N1G21G0005-N	MAIN STEAM RM DRAIN RTN UNIT	
FEA5R	N1TB00119	COMPONENT CLG & SERVICE WTR DRAIN PUMP RECEPTACLE	
FEA6	N1G21M0001A-N	1A RC DRAIN TANK PUMP	
FEA7	----------	SPARE	
FEB2L	N1V31G0010-N	DISC SWITCH N1R18B018 >>> 1B AUX BLDG ELEVATOR	
FEB2R	----------	LOWER EQUIPMENT RM AHU HEATING COIL	
FEB3	N1G21M0008A-N	1A WASTE MONITOR TANK PUMP	
FEB5	N1T53M0001A-N	1A LINK BELT PULL PAK	
FEB6	N1V47M0022-N	LOWER EQUIPMENT RM EXHAUST FAN	
FEB7	N1T53M0001B-N	1B LINK BELT PULL PAK	
FEC2	N1G21M0005-N	SPENT RESIN SLUICE PUMP	
FEC3L	----------	SPARE	
FEC3R	**N1V51E0004A-N** **N1V51L004A-N** **N1V51L004B-N** **N1V51L002A-N**	**1A CONVENIENCE OUTLET TRANSFORMER >>> RCPT. PANELS RP-1A, RP-1B, & RP-1F**	D-50 D-52 D-54
FEC4	N1G21M0026-N	WASTE EVAPORATOR FEED PUMP	
FEC5	N1G21M0027-N	FLOOR DRAIN TANK PUMP	
FEC6	----------	SPARE	
FEC7L	N1V47CD0047-N	AHU-ROD CONTROL ROOM	
FEC7R	Q1G22K0001B-N	1B CATALYTIC H2 RECOMBINER HTR	
FED2	N1G21M0006-N	LAUNDRY AND HOT SHOWER TANK PUMP	

DD08
EA05
1E 600/208V MCC **AB - 100'** **B177556-5**
(CONT'D)

BKR	TPNS	DESCRIPTION
FED3	N1G21M0007-N	CHEMICAL DRAIN TANK PUMP
FED4	N1E13M0002-N	SPRAY ADDITIVE TANK RECIRC PUMP
FED5	N1V47C0030-N	COMPUTER UPS SUPPLY FAN
FED6L	----------	600V WELDING RECEPTACLES EL-77'
FED6R	----------	600V WELDING RECEPTACLES EL-100' & 127'
FED7	N1V47C0031-N	COMPUTER UPS SEC EXHAUST FAN
FEE3	N1V47M0005-N	600V LOAD CENTER RM AHU
FEE4L	N1V47K0048-N	CONDENSER- ROD CONTROL ROOM
FEE4R	----------	SPARE
FEE5L	----------	SPARE
FEE5R	N1TB0001	INCORE DET DRIVE AND CONT PNL
FEE6	Q1G22M0001B-N	1B WASTE GAS COMPRESSOR PKG PUMP
FEE7	----------	SPARE
FEF3	N1P42M0001A-N	1A PLANT HEATING SYS PRIMARY PUMP
FEF4	N1V47M0026-N	LOWER EQUIPMENT ROOM AHU
FEF5	N1P42M0001B-N	1B PLANT HEATING SYS PRIMARY PUMP
FEF6	----------	SPARE
FEG3	Q1E21MOV8105-N	RCP SEAL INJ SUPPLY MOV
FEG4	----------	SPARE
FEG5	N1V47K0003-N	600V LOAD CENTER CONDENSING UNIT
FEH2	----------	SPARE
FEH3	----------	SPARE
FEH4	N1G24M0001-N	STEAM GEN BLOWDOWN SPENT RESIN SLUICE PUMP

DD08
EA05
1E 600/208V MCC **AB - 100'** **B177556-5**
(CONT'D)

BKR	TPNS	DESCRIPTION	SEE PAGE
FEH5	N1T40M0001C-N	1C CTMT RECIRC FAN	
FEI2L	Q1G22K0001A-N	1A CATALYTIC H2 RECOMBINER HTR	
FEI5L	**N1R17B0005-N**	**1E 600/208V MCC XFMR >>> 1E MCC 208V SECTION**	D-57
FEI5R	----------	SPARE	

DD08
EA05
FEI5L
1E 208V MCC SECTION AB - 100' B177556-5C

BKR	TPNS	DESCRIPTION	SEE PAGE
	N1R17B0005-N	**1E 600/208V MCC (208V SECTION) <<< FEI5L**	
HEJ2	----------	SPARE	
HEJ3	----------	SPARE	
HEJ4L	----------	SPARE	
HEJ4R	----------	SPARE	
HEJ5R	**N1R19L0001F-N**	**1F SPACE HEATERS DIST PNL >>>**	D-59
HEJ6	----------	SPARE	
HEJ7	N1G22M0002-N	GAS DECAY TANK DRAIN PUMP	
HEK2	N1E21M0008B-N	1B CHG/HHSI PUMP AUX LUBE OIL PUMP	
HEK3	N1E21M0008C-N	1C CHG/HHSI PUMP AUX LUBE OIL PUMP	
HEK4	----------	SPARE	
HEK5	----------	SPARE	
HEK6	----------	SPARE	
HEK7	----------	SPARE	
HEL2L	N1T31K0003A-N	STUD TENSIONER HOIST NO. 1	
HEL2R	N1T31K0003B-N	STUD TENSIONER HOIST NO. 2	
HEL3L	N1T31K0003C-N	STUD TENSIONER HOIST NO. 3	
HEL5	----------	MCC SPACE HTRS BKR COMPT	
HEL6	N1N25M0005C-N	1C CHEMICAL INJECTION PUMP	
HEL7	N1N25M0005D-N	1D CHEMICAL INJECTION PUMP	
HEM2	----------	SPARE	
HEM3	----------	SPARE	

8. 005 K6.03 001/MODIFIED/FARLEY/HIGHER//RO/FARLEY/11/2007/NO

Given the following:

- Unit 1 is performing a plant cooldown using the "A" Train Residual Heat Removal (RHR) system.
- HIK-603A, " 1A RHR HX DISCH VLV," is at 50%.
- Subsequently, Instrument Air is lost to FCV-605A, "1A RHR HX BYP FLOW," due to a supply line leak.
- NO other equipment is affected.

Which ONE of the following describes the effect on total RHR flow and RHR HX outlet temperature when the plant stabilizes from the transient?

Assume no operator action is taken.

	Total RHR Flow	RHR HX Outlet temperature
A.	INCREASES	INCREASES
B.	DECREASES	INCREASES
C.	INCREASES	DECREASES
D✓	DECREASES	DECREASES

A is incorrect; represents the response if the valve failed open.

B is incorrect; represents the response if the valve failed closed, but flow through the HX would actually rise, so temperature would be lower

C is incorrect; represents the response if the valve failed open.

D is correct. More flow is forced though the HX, because the valve fails closed. Other options are credible because loss of air will cause a transient.

When the bypass valve fails closed, total system flow will decrease.
Flow through the HX will increase and due to the increased flow through the hx that is being cooled, the cooldown rate will increase.

Knowledge of the effect of a loss or malfunction on the following will have on the RHRS: RHR heat exchanger

Question Number: 5

Tier 2 Group 1

Importance Rating: 2.5

Technical Reference: LP 40301, AOP-6.0
Proposed references to be provided to applicants during examination: None
Learning Objective:
10 CFR Part 55 Content: 41.7

Comments:

Source :	MODIFIED	Source if Bank:	FARLEY
Cognitive Level:	HIGHER	Difficulty:	
Job Position:	RO	Plant:	FARLEY
Date:	11/2007	Previous NRC?:	NO

TABLE 1

COMPONENT NUMBER	NAME	MANUAL OPERATOR	FAILED POSITION	OPERATOR DRAWING
Q1C22FCV499 (1-CFW-FCV-499)	SG 1C FEED FLOW BYPASS FK-499	NO	CLOSED	
Q1E11V032A (1-RHR-HV-603A)	HX 1A OUTLET	NO	OPEN	U-210186
Q1E11V032B (1-RHR-HV-603B)	HX 1B OUTLET	NO	OPEN	U-210186
Q1E11V033A (1-RHR-FCV-605A)	HX 1A BYPASS	NO	CLOSED	U-210186
Q1E11V033B (1-RHR-FCV-605B)	HX 1B BYPASS	NO	CLOSED	U-210186
N1E14HV3657 (1-CBV-HV-3657)	CTMT AIR SAMPLE MONITOR ISO	YES	CLOSED	
N1E14HV3658 (1-CBV-HV-3658)	CTMT AIR SAMPLE MONITOR ISO	YES	CLOSED	
N1E21FCV1006 (1-CVC-HV-BEF-4)	VENT CONDENSER VENT	NO	CLOSED	U-213251
N1E21FCV1016 (1-CVC-HV-BEF-33)	EVAP CONCENTRATE DISCH TO BAT OR WPS	NO	CLOSED	U-213251
N1E21FCV1017 (1-CVC-HV-BEF-35)	EVAP CONCENTRATE DISCH TO DRN HEADER	NO	CLOSED	U-213251
N1E21FCV1020 (1-CVC-HV-BEF-36)	EVAPORATOR FLUSH	NO	CLOSED	U-213251
N1E21FCV1031 (1-CVC-HV-BEF-40)	EVAP CONDENSER AUX STEAM INLET	NO	CLOSED	U-213251
N1E21FCV1032 (1-CVC-HV-BEF-6)	EVAP CONDENSER TO VENT CONDENSER	NO	OPEN	U-213251
N1E21HV3938A (1-CVC-HV-3938A)	ACCUM N2 SUPPLY ISO	YES	CLOSED	
N1E21HV3938B (1-CVC-HV-3938B)	ACCUM N2 SUPPLY ISO	YES	CLOSED	
Q1E21LCV302 (1-CVC-LCV-302)	EVAP DISTILLATE RECIRC		OPEN	

9. 006 A2.10 004/MODIFIED//LOWER//SRO/FARLEY/10/2007/NO

Chemistry sample has determined the following:

- "A" SI Accumulator boron concentration is 2350 ppm.
- "B" SI Accumulator boron concentration is 2198 ppm.
- "C" SI Accumulator boron concentration is 2250 ppm.

Which ONE (1) of the following describes the impact of this condition, and the action required?

A. TWO SI Accumulator Boron concentrations may not adequately counterract the reactivity effects of an uncontrolled RCS cooldown. Drain and fill the accumulators with the low boron concentrations by cross connecting the accumulators with the highest and lowest concentrations while adjusting N2 pressures to produce mixing.

B. TWO SI Accumulator Boron concentrations may not be sufficient to maintain subcriticality in a post-LOCA environment. Feed and Bleed accumulators from RWST to raise boron concentrations.

C. ONE SI Accumulator Boron concentration may not adequately counterract the reactivity effects of an uncontrolled RCS cooldown. Drain and fill the accumulator with the low boron concentration by cross connecting accumulators with the highest and lowest concentrations while adjusting N2 pressures to produce mixing.

D. ✓ ONE SI Accumulator Boron concentration may not be sufficient to maintain subcriticality in a post-LOCA environment. Feed and Bleed accumulator from RWST to raise boron concentration.

A. is incorrect; May confuse the RWST Boron spec of 2300-2500 with the accumulator spec of 2200-2500 and choose two accums out of spec. The TS Basis of the RWST Boron concentration is a closely related ECCS System which has a similar Boron spec but for a different purpose. Plausible to get the two confused. Industry OE revealed that at some plant's operators were cross connecting accumulators through the fill lines and N2 lines to make easy and small adjustments in level, pressure, and boron concentrations. A note in the procedure now reminds NOT to do this since when cross connected a single failure could cause 2 ACCUMS to discharge through the break in the event of a LOCA instead of 1 as accident ananlysis shows.

B. Two is incorrect, but the rest is correct.

C. One is correct; basis is incorrect; Procedure is incorrect.

D. All correct.

TS 3.5.4 basis states that boron concentration of the RWST is designed to ensure subcriticality is maintained with uncontrolled cooldown coincident with most reactive rod stuck fully out.

SOP-8.0, APP 2, FEED AND BLEED OF ACCUMULATOR 1A (1B, 1C) TO RAISE BORON CONCENTRATION >2300 PPM would be used to raise boron concentration

Ability to (a) predict the impacts of the following malfunctions or operations on the ECCS; and (b) based on those predictions, use procedures to correct, control, or mitigate the consequences of those malfunctions or operations: Low boron concentration in SIS.

Question Number: 86

Tier 2 Group 1

Importance Rating: 3.9
Technical Reference: TS B3.5.1/3.5.2 and basis, SOP-8, SOP-2.3,
Proposed references to be provided to applicants during examination: None
Learning Objective:
10 CFR Part 55 Content: 43.2

Comments:

Source :	MODIFIED	Source if Bank:	
Cognitive Level:	LOWER	Difficulty:	
Job Position:	SRO	Plant:	FARLEY
Date:	10/2007	Previous NRC?:	NO

4.0 Instructions

4.1 Filling Accumulator 1A (B, C)

CAUTION: Accumulator levels must be maintained between 35% and 55% while in operational modes 1, 2, and 3 (with RCS pressure greater than 1000 psig).

CAUTION: The accumulator boron concentration must be maintained between 2200 and 2500 ppm while in operational modes 1, 2, and 3 (with RCS pressure greater than 1000 psig).

4.1.1 Verify RWST boron concentration is suitable for makeup to the accumulator.

4.1.2 Verify open HYDRO TEST PUMP SEAL OVERFLOW ISO, Q1E21V083 (1-CVC-V-8979).

4.1.3 Open HYDRO TEST PUMP SUCT, Q1E21V028 (1-CVC-V-8932).

4.1.4 Set HYDRO TEST PUMP DISCH CONT VLV HIK 947 to open.

4.1.5 Verify closed ACCUM N2 SUPP ISO, Q1E21HV8880.

4.1.6 Unlock AND open HYDRO TEST PUMP DISCH TO ACCUM, N1E21V085 (1-CVC-V-8967). [Key # Z-60]

4.1.7 Start the hydro test pump.

NOTE: IF depressurized per section 4.9, THEN step 4.1.8 has been performed.

4.1.8 IF the accumulator is being filled from the empty condition, THEN open the following valves:

- 1A (B, C) ACCUM N2 SUPP/VT ISO, Q1E21HV8875A (B, C).
- ACCUM N2 VENT HIK-936.

CAUTION: Cross-connection of accumulators via N2 or Fill lines is prohibited in Modes 1, 2, or 3 (with RCS pressure greater than 1000 psig). This is because in the event of a LOCA, all cross-connected accumulators would depressurize through the faulted RCS loop.

4.1.9 Perform the following:

4.1.9.1 Open ACCUM FILL LINE ISO, Q1E21HV8860.

4.1.9.2 Open 1A (B, C) ACCUM FILL LINE ISO, Q1E21HV8878A (B, C).

FARLEY NUCLEAR PLANT

FNP-1-SOP-8.0

APPENDIX 2

FEED AND BLEED OF ACCUMULATOR 1A (1B, 1C)
TO RAISE BORON CONCENTRATION > 2300 PPM

Completed By: _____ Date: _____

Reviewed By: _____ Date: _____

This appendix consists of 4 pages.

FEED AND BLEED OF ACCUMULATOR 1A (1B, 1C) TO RAISE BORON CONCENTRATION > 2300 PPM

1.0 Purpose

1.1 This appendix is written to address inleakage into 1A (1B, 1C) accumulator from the RCS and the associated concern for a reduction in boron concentration.

2.0 Precautions and Limitations

2.1 Utilizing this method of Feed and Bleed, reactor coolant will backfill the accumulator discharge line up to the accumulator test line connection.

2.2 A 1% increase in accumulator level = 8.3 gallons.

2.3 Sample flushes should be minimized to only that required to obtain sample when sampling an accumulator that has inleakage to prevent accumulator from filling with RCS water.

2.4 Do not use extended sampling as method to drain accumulators as this would allow the accumulator to slowly fill with RCS water and dilute accumulator boron concentration.

2.5 Tech Specs require the accumulator be sampled within 6 hours after each solution volume increase of ≥ 1% of tank volume (approximately 12% increase in level).

3.0 Instructions

3.1 Verify the following: (OR 1-98-498)

_____ 3.1.1 The version of this procedure is the current version.

_____ 3.1.2 This procedure is the correct procedure and unit for the task.

_____ 3.2 Record initial Accumulator 1A (1B, 1C) boron concentration.

_____ ppm

CAUTION:	**Accumulator level must be maintained between 35% and 55%; the intent of this appendix is to finish the feed and bleed at approximately 40%.**

CAUTION:	**Accumulator boron concentration must be maintained between 2200 and 2500 ppm; the intent of this appendix is to raise accumulator boron concentration > 2300 ppm.**

3.3 Aligning Accumulator 1A (1B, 1C) for Filling

____ 3.3.1 Verify open HYDRO TEST PUMP SEAL OVERFLOW ISO, Q1E21V083 (1-CVC-V-8979).

____ 3.3.2 Open HYDRO TEST PUMP SUCT, Q1E21V028 (1-CVC-V-8932).

____ 3.3.3 Set HYDRO TEST PUMP DISCH CONT VLV, HIK 947, to open.

____ 3.3.4 Verify closed ACCUM N2 SUPP ISO, Q1E21HV8880.

____ 3.3.5 Start the hydro test pump.

____ 3.3.6 Unlock AND open HYDRO TEST PUMP DISCH TO ACCUM, N1E21V085 (1-CVC-V-8967). [Key # Z-60]

____ 3.3.7 Open the following valves:

- ACCUM FILL LINE ISO, Q1E21HV8860.
- 1A (B, C) ACCUM FILL LINE ISO, Q1E21HV8878A (B, C)

____ 3.4 IF desired for trending purposes, THEN have Chemistry sample accumulator test line at start of feed and bleed at ACCUM TEST LINE TO RWST LOCAL SAMPLE, N1E21V008B (1-CVC-V-8962B)

3.4.1 Record the boron concentration _____ ppm

3.5 Aligning Accumulator 1A (1B, 1C) for Draining

____ 3.5.1 Open ACCUM TEST LINE TO RWST ISO, Q1E21HV8961.

____ 3.5.2 Open ACCUM TEST LINE TO RWST ISO, Q1E21HV8871.

____ 3.5.3 Open 1A (1B, 1C) ACCUM TEST LINE ISO, Q1E21HV8877A (B, C) to commence draining accumulator.

____ 3.6 Adjust HYDRO TEST PUMP DISCH CONT VLV, using HIK 947 to control fill rate to match drain rate.

CAUTION: IF accumulator 1A (1B, 1C) level exceeds 55% or decreases below 35%, THEN stop feed and bleed AND restore level.

3.7 Monitor Accumulator 1A, 1B, & 1C levels.

____ 3.7.1 Verify that only the selected accumulator level is changing.

____ 3.7.2 Verify all other accumulator levels remain constant.

CAUTION: IF accumulator 1A (1B, 1C) pressure exceeds 640 psig or decreases below 610 psig, THEN stop feed and bleed AND restore pressure.

3.8 Monitor Accumulator 1A, 1B, & 1C pressures.

____ 3.8.1 Verify that only the selected accumulator pressure is changing.

____ 3.8.2 Verify all other accumulator pressures remain constant.

____ 3.9 Continue Accumulator 1A (1B, 1C) feed and bleed for approximately 1 hour or as specified by Shift Supervisor.

____ 3.10 IF desired for trending purposes, THEN have Chemistry sample accumulator test line prior to completion of feed and bleed at ACCUM TEST LINE TO RWST LOCAL SAMPLE, N1E21V008B (1-CVC-V-8962B)

3.10.1 Record boron concentration _____ ppm.

____ 3.11 WHEN Accumulator 1A (1B, 1C) feed and bleed is complete, THEN adjust HYDRO TEST PUMP DISCH CONT VLV, HIK 947 to open.

3.12 Secure Accumulator 1A (1B, 1C) draining as follows:

3.12.1 Close the following valves:

____ • 1A (B, C) ACCUM TEST LINE ISO, Q1E21HV8877A (B, C).

____ • ACCUM TEST LINE TO RWST ISO, Q1E21HV8961.

____ • ACCUM TEST LINE TO RWST ISO, Q1E21HV8871.

3.13 Secure Accumulator 1A (1B, 1C) filling as follows:

____ 3.13.1 Stop the hydro test pump.

____ 3.13.2 Close the following valves:

____ • 1A (B, C) ACCUM FILL LINE ISO, Q1E21HV8878A (B, C).

____ • ACCUM FILL LINE ISO, Q1E21HV8860.

____ • HYDRO TEST PUMP DISCH TO ACCUM, N1E21V085 (1-CVC-V-8967).

____ • HYDRO TEST PUMP SUCT, Q1E21V028 (1-CVC-V-8932)

____ 3.13.3 Install locking device on HYDRO TEST PUMP DISCH TO ACCUM, N1E21V085 (1-CVC-V-8967) LOCKED CLOSED [Key # Z-60]

3.13.4 Verify closed the following valves:

____ • 1A (B, C) ACCUM N2 SUPP/VT ISO, Q1E21HV8875A (B, C).

____ • ACCUM N2 VENT, HIK 936.

____ 3.13.4 Verify HYDRO TEST PUMP DISCH CONT VLV full open using HIK 947.

____ 3.14 Have Chemistry sample Accumulator 1A (1B, 1C) for boron concentration. AND record.

3.14.1 Record boron concentration _____ ppm.

____ 3.15 IF boron concentration < 2300 ppm, THEN perform additional feed and bleeds.

4.2.2.16 IF the boric acid and/or reactor makeup water flow controllers were adjusted, THEN perform the following:

(a) Verify the BORIC ACID MKUP FLOW controller FK 113 is in the MAN position. (AI2005205348)

(b) Restore controller FK-113 to the setpoint required for automatic makeup per step 4.1.2.

(c) Verify FK-168 PRI WTR MKUP FLOW controller in Auto.

4.2.2.17 IF LK-112 was adjusted, THEN return LK-112 setpoint to that required for current conditions.

4.2.3 Makeup to refueling water storage tank (RWST)

NOTE:
- **Due to system interconnections, the RWST should not be on recirculation using the Refueling Water Purification Pump while making up to the RWST. However, it is permissible to makeup while BARS is in operation.**
- **IF makeup to the RWST is due to BARS operation, THEN to minimize dilution of the RWST, boron concentration the blended flow should be greater than or equal to the BARS reject flow concentration.**
- **IF desired to flush the line of acid following makeup, THEN remember to perform step 4.2.3.15 at an appropriate time prior to reaching the batch integrator setpoint.**

CAUTION: Avoid operations that could result in RCS volume changes. Makeup to the VCT from the blender will not be available while making up to the RWST.

4.2.3.1 Verify the RWST capable of receiving makeup.

4.2.3.2 Using the blended flow nomograph or table, Figure 1, determine the quantity and concentration (boric acid and reactor makeup water, or blend) of makeup to be supplied (assuming the boron concentration in the RWST will not change).

4.2.3.3 IF the final boron concentration in the RWST is going to differ from the initial, THEN use the following formulas to determine the amount of water or acid to be added.

To dilute the RWST: $VA = \frac{CI - CF}{CF}(VI)$

To borate the RWST: $VA = \frac{CI - CF}{CF - CA}(VI)$

To determine final boron concentration:

$CF = \frac{[CI \times VI] + [CA \times VA]}{VF}$

Where:

VA = Volume of water or acid added to the RWST

VI = Initial water volume in RWST

VF = Final water volume in RWST

CI = Initial boron concentration in RWST

CF = Final boron concentration in RWST

CA = Boron concentration added to RWST

4.2.3.4 IF the RWST is on recirc, THEN secure the Refueling Water Purification Pump.

NOTE:	**When blended flow concentration of 2000 PPM is required, the makeup system may not be able to deliver boric acid flow for 120 gpm total flow. IF necessary, THEN the total flow may be set for < 120 gpm and the individual flows proportioned accordingly.**

NOTE:	**The Boric Acid and/or Total Flow Batch Integrators ONLY need to be verified when changed. This should be documented with an Autolog Entry.**

4.2.3.5 Set the boric acid and/or reactor makeup water flow controllers and their respective batch integrators to the required flowrate and quantity values obtained from step 4.2.3.2 or 4.2.3.3.

4.2.3.6 Position the MKUP MODE CONT SWITCH to STOP.

4.2.3.7 Position the MKUP MODE SEL SWITCH to MAN.

4.2.3.8 Open blender discharge to RWST valve 1-CVC-V-8434 (N1E21V238).

4.2.3.9 Open blender miscellaneous discharge isolation valve 1-CVC-V-8432 (Q1E21V237).

4.2.3.10 Place MKUP TO CHG PUMP SUCTION HDR Q1E21FCV113B (Q1E21V337) in the CLOSED position.

4.2.3.11 Place MKUP TO VCT Q1E21FCV114A (Q1E21V339) in the CLOSED position.

4.2.3.12 IF making up to the RWST is due to the depletion of boron by the BARS system and it is desired to make-up with boric acid only, THEN close RMW TO BLENDER valve Q1E21FCV114B (Q1E21V345).

NOTE: Makeup may be stopped at any time by positioning the MKUP MODE CONT SWITCH to STOP.

4.2.3.13 Position the MKUP MODE CONT SWITCH to START.

4.2.3.14 IF 1B RMW PUMP is running and not required for current plant operations, THEN position the 1B RMW PUMP switch in STOP.

4.2.3.15 Verify boric acid flow on FI-113 and reactor makeup flow on FI-168 are at the pre-selected rates as displayed on MAKEUP FLOW TO CHG/VCT indicator.

4.2.3.16 IF desired to flush the acid out of the line, THEN at the appropriate time to conclude the makeup with RMW only:

(a) Verify RMW TO BLENDER valve Q1E21FCV114B (Q1E21V345) open.

(b) Close BORIC ACID TO BLENDER valve Q1E21FCV113A (Q1E21V354)

4.2.3.17 Verify makeup automatically stops when batch integrator setpoints are reached by observing the following:

(a) Boric acid flow on FI-113 and reactor makeup flow on FI-168 return to zero as displayed on MAKEUP FLOW TO CHG/VCT indicator.

(b) RMW TO BLENDER valve Q1E21FCV114B (Q1E21V345) closed IF in AUTO.

(c) BORIC ACID TO BLENDER valve Q1E21FCV113A (Q1E21V354) closed.

4.2.3.18 Close blender miscellaneous discharge isolation valve 1-CVC-V-8432 (Q1E21V237).

4.2.3.19 Close blender discharge to RWST valve 1-CVC-V-8434 (N1E21V238).

4.2.3.20 Place MKUP TO VCT Q1E21FCV114A (Q1E21V339) in AUTO.

4.2.3.21 Place MKUP TO CHG PUMP SUCTION HDR Q1E21FCV113B (Q1E21V337) in AUTO.

4.2.3.22 Verify RMW TO BLENDER valve Q1E21FCV114B (Q1E21V345) in AUTO.

4.2.3.23 Verify BORIC ACID TO BLENDER valve Q1E21FCV113A (Q1E21V354) in AUTO.

NOTE: The following two steps are not required if operation in a mode other than automatic is required.

4.2.3.24 Position the MKUP MODE SEL SWITCH to AUTO.

4.2.3.25 Position the MKUP MODE CONT SWITCH to START.

4.2.3.26 Set the boric acid and/or total flow batch integrators to the required quantities as needed for normal system operation.

4.2.3.27 IF the boric acid and/or reactor makeup water flow controllers were adjusted, THEN perform the following:

(a) Verify the BORIC ACID MKUP FLOW controller FK 113 is in the MAN position. (AI2005205348)

(b) Restore controller FK-113 to the setpoint required for automatic makeup per step 4.1.2.

(c) Verify FK-168 PRI WTR MKUP FLOW controller in Auto.

4.2.3.28 IF the Refueling Water Purification Pump was secured in Step 4.2.3.4, THEN perform the following:

(a) Start the RWP pump.

(b) Throttle SFP purification outlet to RWST 1-SFP-V-8793B (N1G31V021B) to establish 100 gpm on the SFP demineralizer FI-654.

4.2.4 Makeup to recycle holdup tanks (RHT)

CAUTION: Avoid operations that could result in RCS volume changes. Makeup to the VCT from the blender will not be available while making up to a RHT.

NOTE: IF desired to flush the line of acid following makeup, THEN remember to perform step 4.2.4.17 at an appropriate time prior to reaching the batch integrator setpoint.

4.2.4.1 Using blended flow nomograph or table, Figure 1, determine the quantity and concentration (boric acid, reactor makeup water, or blend) of makeup to be supplied to the RHT.

4.2.4.2 IF the final boron concentration in the RHT is going to differ from the initial, THEN use the following formulas to determine the amount of water or acid to be added.

To dilute the RHT: $VA = \frac{CI - CF}{CF}(VI)$

To borate the RHT: $VA = \frac{CI - CF}{CF - CA}(VI)$

Where:

VA = Amt. of water or acid added to the RHT

B 3.5 EMERGENCY CORE COOLING SYSTEMS (ECCS)

B 3.5.1 Accumulators

BASES

BACKGROUND

The functions of the ECCS accumulators are to supply water to the reactor vessel during the blowdown phase of a loss of coolant accident (LOCA), to provide inventory to help accomplish the refill phase that follows thereafter, and to provide Reactor Coolant System (RCS) makeup for a small break LOCA.

The blowdown phase of a large break LOCA is the initial period of the transient during which the RCS departs from equilibrium conditions, and heat from fission product decay, hot internals, and the vessel continues to be transferred to the reactor coolant. The blowdown phase of the transient ends when the RCS pressure falls to a value approaching that of the containment atmosphere.

In the refill phase of a LOCA, which immediately follows the blowdown phase, reactor coolant inventory has vacated the core through steam flashing and ejection out through the break. The core is essentially in adiabatic heatup. The balance of accumulator inventory is then available to help fill voids in the lower plenum and reactor vessel downcomer so as to establish a recovery level at the bottom of the core and ongoing reflood of the core with the addition of safety injection (SI) water.

The accumulators are pressure vessels partially filled with borated water and pressurized with nitrogen gas. The accumulators are passive components, since no operator or control actions are required in order for them to perform their function. Internal accumulator tank pressure is sufficient to discharge the accumulator contents to the RCS, if RCS pressure decreases below the accumulator pressure.

Each accumulator is piped into an RCS cold leg via an accumulator line and is isolated from the RCS by a motor operated isolation valve and two check valves in series.

The accumulator motor operated isolation valves are maintained in the open position with power to the valve removed when pressurizer pressure is ≥ 2000 psig. Should the valves be inadvertently closed below 2000 psig, the requirements of this LCO would ensure that the valves would be returned to their correct position in a timely manner or the plant would be taken out of the Mode of Applicability. The valves will

(continued)

BASES

BACKGROUND (continued)

automatically open, however, as a result of an SI signal. These features and requirements ensure that the accumulators will be available for injection.

The accumulator size, water volume, and nitrogen cover pressure are selected so that two of the three accumulators are sufficient to partially cover the core before significant clad melting or zirconium water reaction can occur following a LOCA. The need to ensure that two accumulators are adequate for this function is consistent with the LOCA assumption that the entire contents of one accumulator will be lost via the RCS pipe break during the blowdown phase of the LOCA.

APPLICABLE SAFETY ANALYSES

The accumulators are assumed OPERABLE in both the large and small break LOCA analyses at full power (Ref. 1). These are the Design Basis Accidents (DBAs) that establish the acceptance limits for the accumulators. Reference to the analyses for these DBAs is used to assess changes in the accumulators as they relate to the acceptance limits.

In performing the LOCA calculations, conservative assumptions are made concerning the availability of ECCS flow. In the early stages of a LOCA, with or without a loss of offsite power, the accumulators provide the sole source of makeup water to the RCS. The assumption of loss of offsite power is also considered to determine if it is most limiting, and if so, imposes a delay wherein the ECCS pumps cannot deliver flow until the emergency diesel generators start, come to rated speed, and go through their timed loading sequence. In cold leg break scenarios, the entire contents of one accumulator are assumed to be lost through the break.

The limiting large break LOCA is a double ended guillotine break in the cold leg. During this event, the accumulators discharge to the RCS as soon as RCS pressure decreases to below accumulator pressure.

As a conservative estimate, no credit is taken for ECCS pump flow until an effective delay has elapsed. This delay accounts for the diesels starting and the pumps being loaded and delivering full flow. The delay time is conservatively set with an additional 2 seconds to account for SI signal generation. During this time, the accumulators are analyzed as providing the sole source of emergency core cooling. No operator action is assumed during the blowdown stage of a large break LOCA.

(continued)

BASES

APPLICABLE SAFETY ANALYSES (continued)

The worst case small break LOCA analyses also assume a time delay before pumped flow reaches the core. For the larger range of small breaks, the rate of blowdown is such that the increase in fuel clad temperature is terminated solely by the accumulators, with pumped flow then providing continued cooling. As break size decreases, the accumulators and centrifugal charging pumps both play a part in terminating the rise in clad temperature. As break size continues to decrease, the role of the accumulators continues to decrease until they are not required and the centrifugal charging pumps become solely responsible for terminating the temperature increase.

This LCO helps to ensure that the following acceptance criteria established for the ECCS by 10 CFR 50.46 (Ref. 2) will be met following a LOCA:

a. Maximum fuel element cladding temperature is ≤ 2200°F;

b. Maximum cladding oxidation is ≤ 0.17 times the total cladding thickness before oxidation;

c. Maximum hydrogen generation from a zirconium water reaction is ≤ 0.01 times the hypothetical amount that would be generated if all of the metal in the cladding cylinders surrounding the fuel, excluding the cladding surrounding the plenum volume, were to react; and

d. Core is maintained in a coolable geometry.

Since the accumulators discharge during the blowdown phase of a LOCA, they do not contribute to the long term cooling requirements of 10 CFR 50.46.

For both the large and small break LOCA analyses, a nominal contained accumulator water volume is used. The contained water volume is the same as the deliverable volume for the accumulators, since the accumulators are emptied, once discharged. For large breaks, an increase in water volume can be either a peak clad temperature penalty or benefit, depending on downcomer filling and subsequent spill through the break during the core reflooding portion of the transient. The safety analysis assumes values of 7331 gallons for the accumulator, and 337 gallons for the accumulator discharge line. To allow for instrument inaccuracy, values of 7,555 gallons and 7,780 gallons are specified. These values include the volume of water in the accumulator discharge line.

(continued)

BASES

APPLICABLE SAFETY ANALYSES (continued)

The minimum boron concentration setpoint is used in the post LOCA boron concentration calculation. The calculation is performed to assure reactor subcriticality in a post LOCA environment. Of particular interest is the large break LOCA, since no credit is taken for control rod assembly insertion. A reduction in the accumulator minimum boron concentration would produce a subsequent reduction in the available containment sump concentration for post LOCA shutdown and an increase in the maximum sump pH. The maximum boron concentration is used in determining the cold leg to hot leg recirculation injection switchover time and minimum sump pH.

The large and small break LOCA analyses are performed at the minimum nitrogen cover pressure for small break LOCA and nominal nitrogen cover pressure for large break LOCA, since sensitivity analyses have demonstrated that higher nitrogen cover pressure results in a computed peak clad temperature benefit. A sensitivity study is performed for the BE LOCA (large break LOCA) to determine the sensitivity of PCT to accumulator pressure. This study, in addition to several others, is incorporated into a PCT response surface in order to generate a 95/95 PCT. The maximum nitrogen cover pressure limit prevents accumulator relief valve actuation, and ultimately preserves accumulator integrity.

The effects on containment mass and energy releases from the accumulators are accounted for in the appropriate analyses (Ref. 2).

The accumulators satisfy Criterion 3 of 10 CFR 50.36(c)(2)(ii).

LCO

The LCO establishes the minimum conditions required to ensure that the accumulators are available to accomplish their core cooling safety function following a LOCA. Three accumulators are required to ensure that 100% of the contents of two of the accumulators will reach the core during a LOCA. This is consistent with the assumption that the contents of one accumulator spill through the break. If less than two accumulators are injected during the blowdown phase of a LOCA, the ECCS acceptance criteria of 10 CFR 50.46 (Ref. 2) could be violated.

For an accumulator to be considered OPERABLE, the isolation valve must be fully open, power removed above 2000 psig, and the limits established in the SRs for contained volume, boron concentration, and nitrogen cover pressure must be met.

BASES

APPLICABILITY

In MODES 1 and 2, and in MODE 3 with RCS pressure > 1000 psig, the accumulator OPERABILITY requirements are based on full power operation. Although cooling requirements decrease as power decreases, the accumulators are still required to provide core cooling as long as elevated RCS pressures and temperatures exist.

This LCO is only applicable at pressures > 1000 psig. At pressures ≤ 1000 psig, the rate of RCS blowdown is such that the ECCS pumps can provide adequate injection to ensure that peak clad temperature remains below the 10 CFR 50.46 (Ref. 2) limit of 2200°F.

The Accumulator Applicability is modified by a Note which takes exception to the LCO requirements for the Accumulators to be OPERABLE in MODE 3 with RCS pressure above 1,000 psig for up to 12 hours during the performance of isolation valve testing required by SR 3.4.14.1. The applicability of the Note is restricted solely to the isolation valve testing required by SR 3.4.14.1. In order to perform the required isolation valve testing, the Accumulators must be isolated and various parameters (e.g., pressure, level) must be adjusted. The exception provided by this Note allows operation in MODE 3 with RCS pressure above 1,000 psig for up to 12 hours with Accumulators not configured per the requirements of the LCO such that the Actions for an inoperable Accumulator are not applicable.

In MODE 3, with RCS pressure ≤ 1000 psig, and in MODES 4, 5, and 6, the accumulator motor operated isolation valves are closed to isolate the accumulators from the RCS. This allows RCS cooldown and depressurization without discharging the accumulators into the RCS or requiring depressurization of the accumulators.

ACTIONS

A.1

If the boron concentration of one accumulator is not within limits, it must be returned to within the limits within 72 hours. In this Condition, ability to maintain subcriticality or minimum boron precipitation time may be reduced. An average boron concentration for the injected water is assumed in the Best Estimate LOCA (large break LOCA) analysis. One accumulator up to 100 ppm below the minimum boron concentration limit, however, will have no effect on available ECCS water and an insignificant effect on post-LOCA core subcriticality. The large main steam line break analysis predicts that the accumulators would discharge following the event. However, their impact is minor and not a design limiting event. Thus, 72 hours is allowed to return the boron concentration to within limits.

(continued)

BASES

ACTIONS (continued)

B.1

If one accumulator is inoperable for a reason other than boron concentration, the accumulator must be returned to OPERABLE status within 24 hours. In this Condition, the required contents of two accumulators cannot be assumed to reach the core during a LOCA. Due to the severity of the consequences should a LOCA occur in these conditions, the 24 hour Completion Time to open the valve, remove power to the valve, or restore the proper water volume or nitrogen cover pressure ensures that prompt action will be taken to return the inoperable accumulator to OPERABLE status. The Completion Time minimizes the potential for exposure of the plant to a LOCA under these conditions. The 24 hours allowed to restore an inoperable accumulator to OPERABLE status is justified in WCAP-15049-A, Rev. 1 (Ref. 3).

C.1 and C.2

If the accumulator cannot be returned to OPERABLE status within the associated Completion Time, the plant must be brought to a MODE in which the LCO does not apply. To achieve this status, the plant must be brought to MODE 3 within 6 hours and RCS pressure reduced to $\leq$ 1000 psig within 12 hours. The allowed Completion Times are reasonable, based on operating experience, to reach the required plant conditions from full power conditions in an orderly manner and without challenging plant systems.

D.1

If more than one accumulator is inoperable, the plant is in a condition outside the accident analyses; therefore, LCO 3.0.3 must be entered immediately.

SURVEILLANCE REQUIREMENTS

SR 3.5.1.1

Each accumulator valve should be verified to be fully open every 12 hours. This verification ensures that the accumulators are available for injection and ensures timely discovery if a valve should be less than fully open. If an isolation valve is not fully open, the rate of injection to the RCS would be reduced. Although a motor operated valve position should not change with power removed, a closed valve could result in not meeting accident analyses assumptions. This Frequency is considered reasonable in view of other administrative controls that ensure a mispositioned isolation valve is unlikely.

(continued)

BASES

SURVEILLANCE REQUIREMENTS (continued)

SR 3.5.1.2 and SR 3.5.1.3

Every 12 hours, borated water volume and nitrogen cover pressure are verified for each accumulator. This Frequency is sufficient to ensure adequate injection during a LOCA. Because of the static design of the accumulator, a 12 hour Frequency usually allows the operator to identify changes before limits are reached. Operating experience has shown this Frequency to be appropriate for early detection and correction of off normal trends.

SR 3.5.1.4

The boron concentration should be verified to be within required limits for each accumulator every 31 days since the static design of the accumulators limits the ways in which the concentration can be changed. The 31 day Frequency is adequate to identify changes that could occur from mechanisms such as stratification or inleakage. Sampling the affected accumulator within 6 hours after a 12% level, indicated, increase (approximately 1% of tank volume) will identify whether inleakage has caused a reduction in boron concentration to below the required limit. It is not necessary to verify boron concentration if the added water inventory is from the refueling water storage tank (RWST), when the water contained in the RWST is within the accumulator boron concentration requirements. This is consistent with the recommendation of NUREG-1366 (Ref. 4).

SR 3.5.1.5

Verification every 31 days that power is removed from each accumulator isolation valve operator when the pressurizer pressure is ≥ 2000 psig ensures that an active failure could not result in the undetected closure of an accumulator motor operated isolation valve. If this were to occur, only one accumulator would be available for injection given a single failure coincident with a LOCA. Therefore, each isolation valve operator is disconnected by a locked open disconnect device. Since power is removed under administrative control, the 31 day Frequency will provide adequate assurance that power is removed.

This SR allows power to be supplied to the motor operated isolation valves when RCS pressure is < 2000 psig, thus allowing operational flexibility by avoiding unnecessary delays to manipulate the breakers during plant startups or shutdowns.

(continued)

BASES

SURVEILLANCE REQUIREMENTS

SR 3.5.1.5 (continued)

Should closure of a valve occur below 2000 psig, the SI signal provided to the valves would open a closed valve in the event of a LOCA.

REFERENCES

1. FSAR, Chapter 15.
2. 10 CFR 50.46
3. WCAP-15049-A, Rev. 1, April 1999.
4. NUREG-1366, February 1990.

3.5 EMERGENCY CORE COOLING SYSTEMS (ECCS)

3.5.1 Accumulators

LCO 3.5.1 Three ECCS accumulators shall be OPERABLE.

APPLICABILITY: MODES 1 and 2,
MODE 3 with RCS pressure > 1000 psig.

----------NOTE----------
In MODE 3, with RCS pressure > 1000 psig, the accumulators may be inoperable for up to 12 hours to perform pressure isolation valve testing per SR 3.4.14.1.

ACTIONS

CONDITION	REQUIRED ACTION		COMPLETION TIME
A. One accumulator inoperable due to boron concentration not within limits.	A.1	Restore boron concentration to within limits.	72 hours
B. One accumulator inoperable for reasons other than Condition A.	B.1	Restore accumulator to OPERABLE status.	24 hours
C. Required Action and associated Completion Time of Condition A or B not met.	C.1	Be in MODE 3.	6 hours
	AND		
	C.2	Reduce RCS pressure to ≤ 1000 psig.	12 hours
D. Two or more accumulators inoperable.	D.1	Enter LCO 3.0.3.	Immediately

SURVEILLANCE REQUIREMENTS

SURVEILLANCE		FREQUENCY
SR 3.5.1.1	Verify each accumulator isolation valve is fully open.	12 hours
SR 3.5.1.2	Verify borated water volume in each accumulator is ≥ 7555 gallons (31.4%) and ≤ 7780 gallons (58.4%).	12 hours
SR 3.5.1.3	Verify nitrogen cover pressure in each accumulator is ≥ 601 psig and ≤ 649 psig.	12 hours
SR 3.5.1.4	Verify boron concentration in each accumulator is ≥ 2200 ppm and ≤ 2500 ppm.	31 days AND -------NOTE------- Only required to be performed for affected accumulators ---------- Once within 6 hours after each solution volume increase of ≥ 12% level, indicated, that is not the result of addition from the refueling water storage tank
SR 3.5.1.5	Verify power is removed from each accumulator isolation valve operator when RCS pressure is ≥ 2000 psig.	31 days

10. 006 A4.01 011/BANK/FARLEY/HIGHER//RO/FARLEY/10/2007/NO

Given the following:

- Unit 1 **WAS** operating at 100% power
- B Train was on service with 1B charging pump running.
- An SI/LOSP has just occurred.
- At 22 seconds after the SI/LOSP actuation annunciator EB1 "CHG PUMP OVERLOAD TRIP"
  comes into alarm.
- The operator notices the amber light on the handswitch for the 1C Chg pump.

Which ONE of the following is correct concerning 1B Chg Pump?

A. 1B Chg Pump must be manually started.

B. 1B Chg Pump will start from the LOSP sequencer.

C. 1B Chg Pump will start due to 1C Chg Pump tripping on OL.

D. 1B Chg Pump will remain running throughout the event per design.

A. incorrect; because 1B charging pump does automatically start due to an overload trip.

B. Incorrect. because the sequencer will only start the 1B charging pump is the 1C charging pump breaker is racked out or has tripped on overload.

C. Correct. The sequencer sequences on the C (unless it is racked out, then it would sequence on the B) after about 17 seconds (approx.12 secs for DG to start and tie on, no more than 5 secs for sequencer to start load.). Then, an overload trip of C will cause B pump (when aligned to same train) to auto start.

D. Incorrect. because if there was an SI with no LOSP, the SI Sequencer would leave B running, not load shed and not start C.

Ability to manually operate and/or monitor in the control room: pumps

Question Number: 7

Tier 2 Group 1

Importance Rating: 4.1

Technical Reference: CVCS LP OPS-52101F

Proposed references to be provided to applicants during examination: None

Learning Objective:

10 CFR Part 55 Content: 41.7

Comments:

Source :	BANK	Source if Bank:	FARLEY
Cognitive Level:	HIGHER	Difficulty:	
Job Position:	RO	Plant:	FARLEY
Date:	10/2007	Previous NRC?:	NO

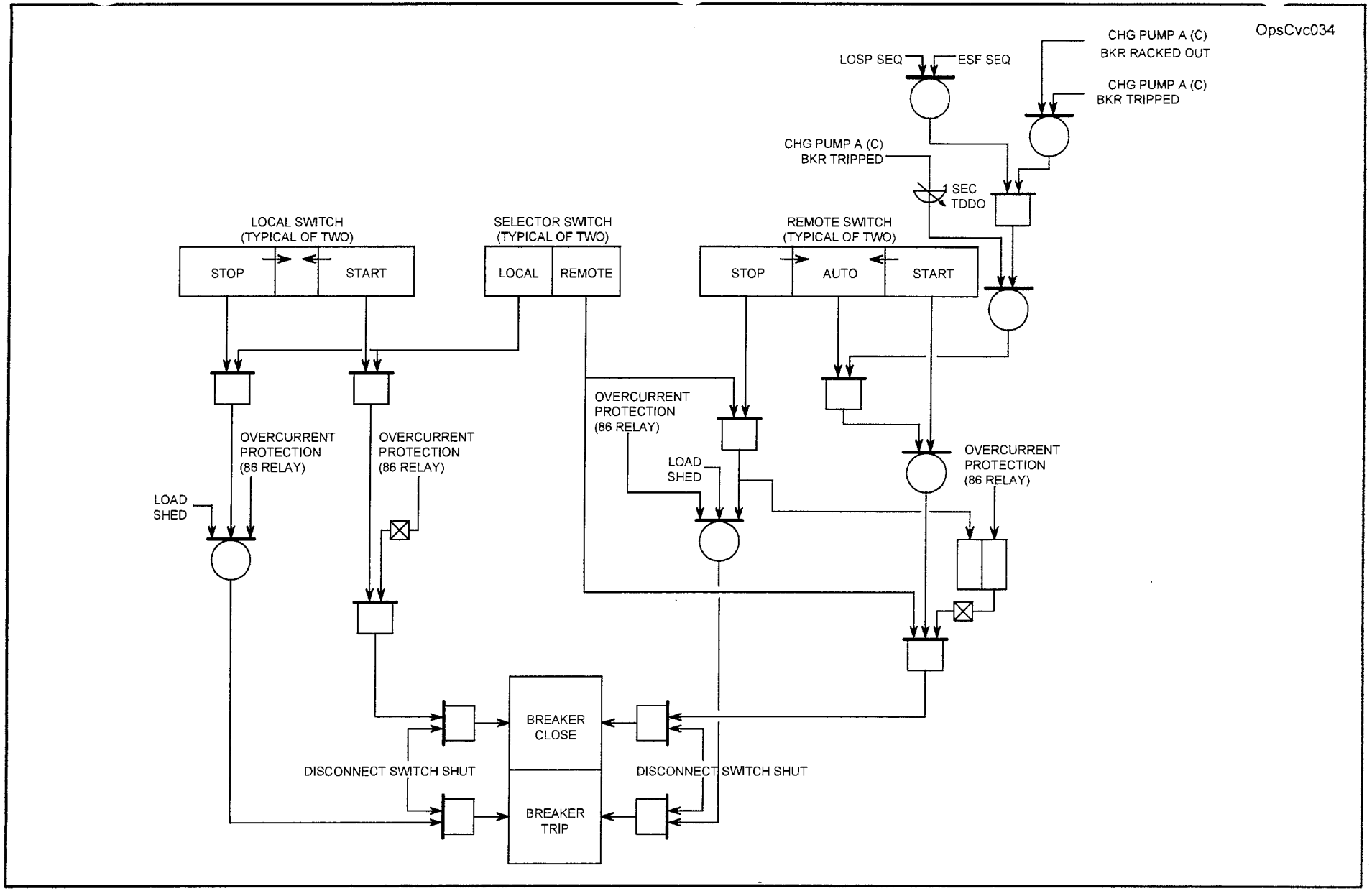

Charging Pump B Control Logic

Figure 13

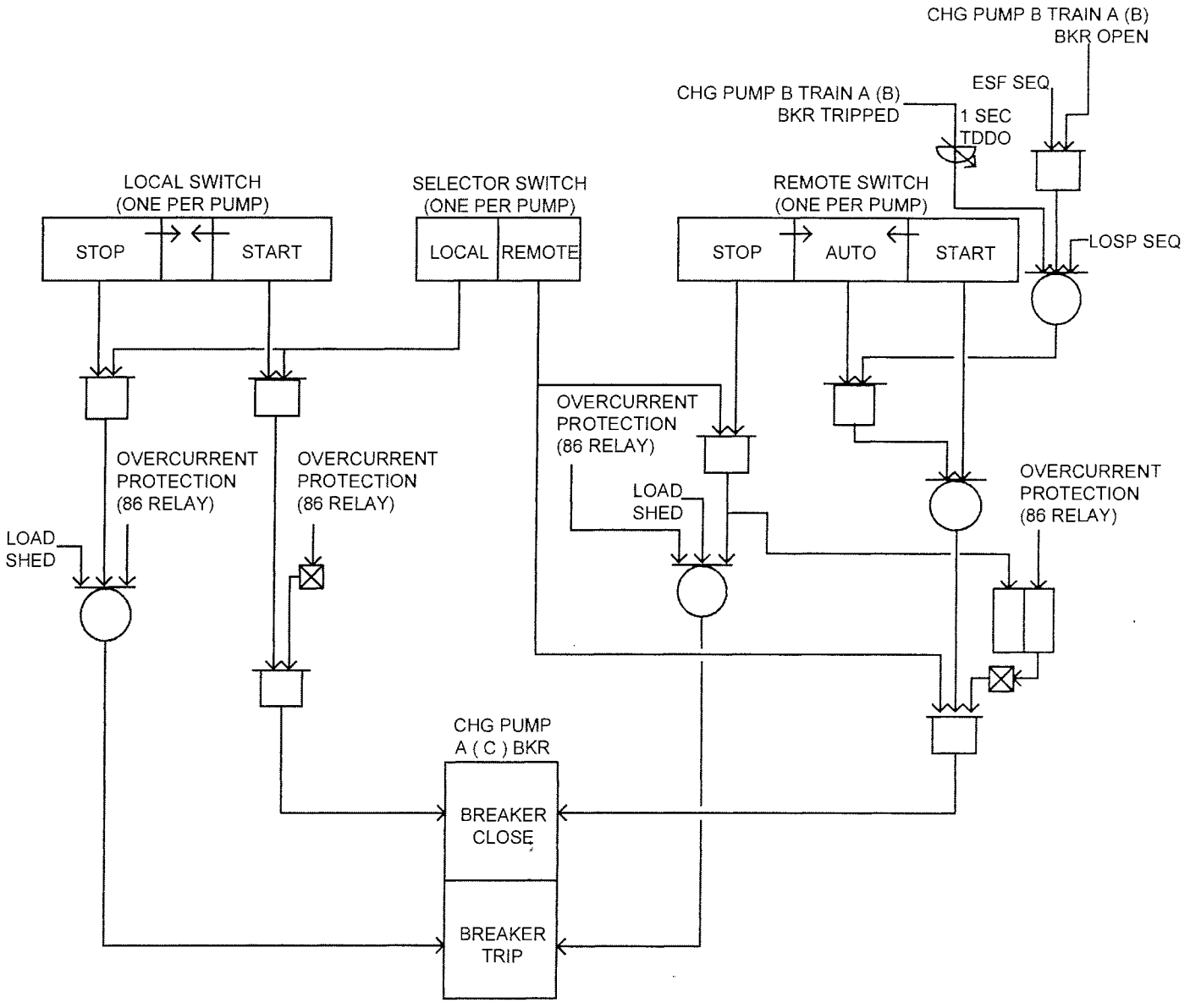

Charging Pump A (C) Control Logic

Figure 12

11. 006 K3.01 001/NEW//HIGHER//RO/FARLEY/11/2007/NO

Given the following:

- A reactor trip and safety injection have occurred.
- EEP-0.0, Reactor Trip and Safety Injection, is in progress
- RCS pressure is 1000 psig
- Containment pressure is 9 psig.
- Core Exit Thermocouples indicate 555 degrees F.
- RCPs are running.
- HHSI flow is 0 GPM.

Which ONE of the following describes the action required for RCPs, and the reason for the action?

A. Trip RCPs to conserve RCS inventory.

B. Trip RCPs to prevent mechanical damage due to loss of subcooling.

C. Allow RCPs to operate to ensure continued core cooling capability.

D. Allow RCPs to operate because RCS subcooling is sufficient to support forced circulation.

A is incorrect. Would be correct if HHSI flow was being indicated.

B is incorrect. Subcooling is lost, however, and RCPs would be tripped if HHSI flow was being indicated.

C is correct. RCPs may not be tripped because there is no HHSI flow per EEP-0 Fold out page.

D is incorrect, although RCPs do remain running. Subcooling is low enough to trip them if HHSI flow was indicated.

Knowledge of the effect that a loss or malfunction of the ECCS will have on the following: RCS

Question Number: 6

Tier 2 Group 1

Importance Rating: 4.1

Technical Reference: EEP-0.0 foldout page

Proposed references to be provided to applicants during examination: None

Learning Objective:

10 CFR Part 55 Content: 41.10

Comments:

Source :	NEW	Source if Bank:	
Cognitive Level:	HIGHER	Difficulty:	
Job Position:	RO	Plant:	FARLEY
Date:	11/2007	Previous NRC?:	NO

Step	Action/Expected Response	Response NOT Obtained
1	**Monitor RCP criteria.**	
1.1	Greater than 16°F(45°F) subcooled in CETC mode.	1.1 IF HHSI flow greater than 0 gpm, THEN stop all RCPs.
2	**Monitor switchover criteria.**	
2.1	CST level greater than 5.3 ft.	2.1 Align AFW pumps suction to SW using FNP-1-SOP-22.0.
3	**Monitor charging miniflow criteria (during SI).**	
3.1	RCS pressure less than 1900 psig.	3.1 Verify miniflow valves open.
3.2	RCS pressure greater than 1300 psig.	3.2 Verify miniflow valves closed.
4	**Monitor adverse containment criteria.**	
4.1	CTMT pressure less than 4 psig and radiation less than 10^5 R/hr.	4.1 Utilize bracketed adverse CTMT condition numbers.

Saturation temperature for 1015 psia is approx. 546°F

- actual core exit temperature is 555°F.

546 - 555 = -9°

- This implies subcooling is < 45°F; actually is 9° superheated

12. 007 K5.02 001/NEW//HIGHER//RO/FARLEY/11/2007/NO

The crew is forming a pressurizer steam space (drawing a bubble) per UOP-1.1. The vacuum refill procedure will **NOT** be performed.

- Unit 1 is in Mode 5 maintaining 325-375 psig
- A Train RHR is on service supplying low pressure letdown.
- RCS is in solid plant pressure control with pressurizer temperature 130°F
- PCV-145, LETDOWN PCV, is in Manual & maintaining 120 gpm letdown flow
- FCV-122, CHG FLOW REG, is in Manual at 0% demand
- HCV-142, RHR TO LETDOWN LINE is open
- All PRZR heaters are on
- Instrument air to the penetration room is lost when IA TO PENE ROOM, N1P19HV3825, goes closed

With no operator action which of the following is correct?

A. RCS Pressure will remain approximately constant & PRT level will remain constant until the pressurizer temperature is at saturation

B. RCS Pressure will stabilize at approximately 2335 psig & PRT level will rise

C. RCS Pressure will lower to approximately VCT pressure & PRT level will remain constant

D. RCS Pressure will stabilize at approximately 450 psig & PRT level will rise

A Incorrect. Plausible, because this is what would happen if the air supply which isolated was downstream of the air header for FCV-122 & HCV-142. Pressurizer temperature is well below saturation, so PRZR heaters will not raise pressure significantly until steam is formed.

B Incorrect. Plausible because this is what would happen if either the RHR reliefs were not aligned, or if the reliefs were sized such that pressure went up to 700 psig and the RHR suction valves would isolate the reliefs.

C Incorrect. Plausible because this is what would happen if FCV-122 failed closed, or HCV-142 & PCV-145 failed open.

D Correct. FCV-122 fails open, HCV-142 fails closed, PCV-145 does not fail and remains at it's position controlled in manual. Charging goes to maximum, Letdown goes to less than it was, pressurizer heaters are all on, RCS pressure goes up until RHR reliefs lift. They are each sized to accomodate one charging pump pumping at full flow with a solid plant and will maintain the RCS pressure at no higher than approximately 450 psig.

Knowledge of the operational implications of the following concepts as the apply to PRTS: Method of forming a steam bubble in the PZR

Question Number: 8

Tier 2 Group 1

Importance Rating: 3.1

Technical Reference: UOP 1.1, RHR FSD A-181002
Proposed references to be provided to applicants during examination: None
Learning Objective:
10 CFR Part 55 Content: 41.10

Comments:

Source :	NEW	Source if Bank:	
Cognitive Level:	HIGHER	Difficulty:	
Job Position:	RO	Plant:	FARLEY
Date:	11/2007	Previous NRC?:	NO

3.15.3.2 The valves must be designed to ASME Code Class II. (References 6.4.13 and 6.5.13)

3.15.4 Seismic Requirements

These valves and operators shall be designated as Seismic Category I. The valve specification requires that the valves be able to withstand seismic loading equivalent to 3.0 g in the horizontal directions and 2.0 g in the vertical direction. (Reference 6.5.6)

3.15.5 I&C Requirements

3.15.5.1 Hand controllers are provided on the main control board for the valves. (Reference 6.2.6)

3.15.5.2 These valves are required to be open during normal operating conditions to support the initial conditions assumed in the accident analysis. Therefore, an alarm is provided to alert the operators if the valve is not fully open. (References 6.2.6 and 6.2.12)

3.15.6 Environmental Qualification Requirements

The I/P (current to pressure) converters for these AOVs must be environmentally qualified as detailed in the Master List of Environmental Qualified Equipment and EQ Packages 13.46 and 53A. (References 6.7.28, 6.7.29, 6.7.48, 6.7.49, and 6.7.59)

3.15.7 Interface Requirements

A pneumatic power supply of 70 to 100 psig plant air is required to the valve air operators. (Reference 6.4.13)

3.16 RHR SUCTION RELIEF VALVES

1-RHR-V-8708A	(Q1E11V015A)
1-RHR-V-8708B	(Q1E11V015B)
2-RHR-V-8708A	(Q2E11V015A)
2-RHR-V-8708B	(Q2E11V015B)

3.16.1 Basic Functions

3.16.1.1 During startup and shutdown operations when the RCS is water solid, low temperature overpressure protection is

provided by a mitigation system that utilizes relief valves 8708A and B. This system mitigates pressure excursions to within the Appendix G limits. (Reference 6.1.17)

3.16.1.2 During RHR operations, the relief valves provide overpressure protection for the RHRS. (Reference 6.2.13)

3.16.2 Functional Requirements

3.16.2.1 Each valve is designed to relieve 900 gpm at 400°F, 50 psig backpressure at 450 psig inlet. In the LTOP evaluation the RHR relief valve is assumed to have a capacity of 700 gpm at a maximum backpressure of 142.6 psig. This is based on 10 percent accumulation at the valve inlet and a set pressure of 450 psig and an RCS temperature of 350°F. (References 6.5.12 and 6.7.45)

3.16.2.2 The relief valve set pressure must be set to prevent the discharge piping from exceeding design plus 10 percent (660 psig) while accounting for the pressure increase across the pump. (References 6.2.24 and 6.2.25)

3.16.2.3 The valves must be designed for pressure and temperature conditions of 400 psig and 600°F. (Reference 6.5.15)

3.16.2.4 The valves must be equipped with bellows to negate the impact of dynamic backpressure on valve performance during a discharge transient. (Reference 6.5.15)

3.16.2.5 Valve discharge piping is required to be seismically supported. This prevents pipe crimping, which could degrade valve performance. (Reference 6.1.17)

3.16.3 Code Requirements

3.16.3.1 The valves must be designed to ASME Code Class II. (Reference 6.4.9)

3.16.3.2 Consistent with requirements of ASME Section XI, these valves should be included in the plant's Inservice Test Program. (References 6.7.24 and 6.7.25)

3.16.4 Seismic Requirements

These valves shall be designated as Seismic Category I. The valve specification requires that the valves be able to withstand seismic loading equivalent to 3.0 g in the horizontal directions and 2.0 g in the vertical direction. (Reference 6.5.12)

3.16.5 Interface Requirements

To protect against RCS overpressure, power is removed to the RHR suction isolation valves (8701A, B and 8702A, B) when RCS temperature is below 180°F. This prevents inadvertent isolation of the relief valves. (Reference 6.1.17)

3.17 INJECTION LINE RELIEF VALVES

1-RHR-V-8864A	(Q1E11V039B)
1-RHR-V-8864B	(Q1E11V039A)
1-RHR-V-8865	(Q1E11V040)
2-RHR-V-8864A	(Q2E11V039B)
2-RHR-V-8864B	(Q2E11V039A)
2-RHR-V-8865	(Q2E11V040)

3.17.1 Basic Functions

These relief valves provide overpressure protection for the LHSI piping due to back leakage from the RCS or thermal expansion of trapped fluid. (Reference 6.2.14)

3.17.2 Functional Requirements

3.17.2.1 Each valve must be conservatively sized to pass the maximum back flow from the RCS at a relieving temperature of 350°F (20 gpm). (Reference 6.5.15)

3.17.2.2 The setpoint pressure must correspond to the maximum design pressure of the RHRS (600 psig).

3.17.2.3 The valves must reach design relief capacity with less than or equal to 10 percent pressure accumulation. (Reference 6.5.15)

3.17.2.4 The valves must pass the design flowrate at 10 percent accumulation, assuming a maximum developed backpressure of 50 psig. (Reference 6.5.15)

3.17.2.5 The valves must be designed for pressure and temperature conditions of 400 psig and 600°F. (References 6.5.15, 6.5.11 and 6.5.12)

3.17.3 Code Requirements

3.17.3.1 The valves must be designed to ASME Code Class II. (Reference 6.5.15)

3.17.3.2 Consistent with requirements of ASME Section XI, these valves should be included in the plant's Inservice Test Program. (References 6.7.24 and 6.7.25)

3.17.4 Seismic Requirements

These valves shall be designated as Seismic Category I. The valve specification requires that the valves be able to withstand seismic loading equivalent to 3.0 g in the horizontal directions and 2.0 g in the vertical direction. (Reference 6.5.12)

3.17.5 Interface Requirements

The valves discharge must be directed to the pressurizer relief tank. Normal backpressure should not exceed 3 psig. (Reference 6.5.15)

3.18 RWST TO RHR CHECK VALVE

RWST to RHR check valve (Q1E11V028 and Q2E11V028) were re-classified as a non-critical component because failure of this valve is not considered an active failure. (See Section 5.10)

3.19 RHR TO RCS COLD LEGS CHECK VALVES

1-RHR-V-8973A	(Q1E11V021A)
1-RHR-V-8973B	(Q1E11V021B)
1-RHR-V-8973C	(Q1E11V021C)
2-RHR-V-8973A	(Q2E11VO21A)
2-RHR-V-8973B	(Q2E11VO21B)
2-RHR-V-8973C	(Q2E11V021C)

TABLE 1

COMPONENT NUMBER	NAME	MANUAL OPERATOR	FAILED POSITION	OPERATOR DRAWING
Q1E21V340 (1-CVC-HV-8547)	BTRS BYPASS CONTROL	NO	OPEN	U-259973
Q1E21V341 (1-CVC-PCV-8157)	VCT HI PRESS VENT BACK PRESS REG	NO	CLOSED	U-259962
Q1E21V345 (1-CVC-FCV-114B)	REAC MAKEUP WATER TO BLENDER	NO	CLOSED	U-166865
Q1E21V347 (1-CVC-FCV-122)	CHG FLOW REG (Fails open)	NO	OPEN	U-357413
Q1E21V350 (1-CVC-TCV-381B)	REHEAT HX BYPASS	NO	OPEN	U-357413
Q1E21V351 (1-CVC-HCV-142)	RHR TO LETDOWN LINE (Fails closed)	NO	CLOSED	U-357413
Q1E21V352 (1-CVC-PCV-145)	LETDOWN PCV (does NOT fail)	NO	OPEN	U-357413
Q1E21V353 (1-CVC-TCV-143)	LETDOWN HI TEMP DIVERT	NO	FLOW TO VCT	U-357413
Q1E21V354 (1-CVC-FCV-113A)	BORIC ACID TO BLENDER	NO	OPEN	U-357413
Q1E21V356 (1-CVC-HV-8101)	VCT TO VENT HEADER ISO	NO	CLOSED	U-176710
Q1E21V361 (1-CVC-TCV-250)	RECYCLE EVAP FEED DEMIN AUTO	NO	FLOW TO RECYCLE EVAP FIL	U-259971
Q1E21V365 (1-CVC-LCV-115A)	VCT HI LEVEL DIVERT	NO	FLOW TO VCT	U-357413
Q1E21V366 (1-CVC-PCV-251)	RHT VENT ISO	NO	CLOSED	U-259759
Q1E21V367 (1-CVC-LCV-460)	LETDOWN LINE ISO	NO	CLOSED	U-357413
Q1E21V368 (1-CVC-LCV-459)	LETDOWN LINE ISO	NO	CLOSED	U-357413
Q1E21V424A (1-CVC-HV-8170A)	BORON MEAS SYS INLET ISO	NO	CLOSED	U-199001

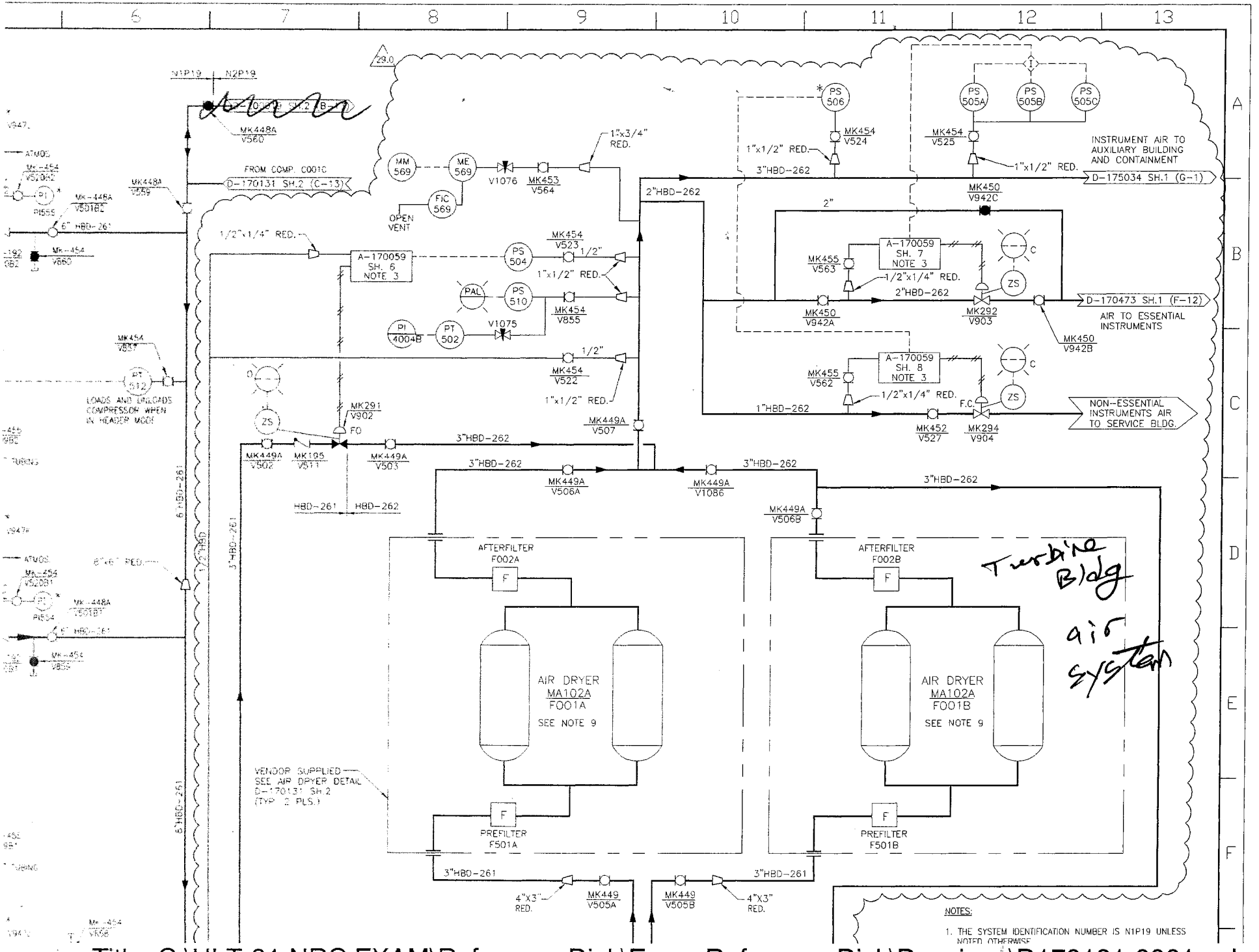
N1P19
N2P19
MK448A V560
FROM COMP. C001C
D-170131 SH.2 (C-13)
MM 569
ME 569
FIC 569
OPEN VENT
V1076
MK453 V564
1"x3/4" RED.
2"HBD-262
PS 506
MK454 V524
1"x1/2" RED.
3"HBD-262
PS 505A
PS 505B
PS 505C
MK454 V525
1"x1/2" RED.
INSTRUMENT AIR TO AUXILIARY BUILDING AND CONTAINMENT
D-175034 SH.1 (G-1)
MK450 V942C
2"
A-170059 SH. 7 NOTE 3
MK455 V563
1/2"x1/4" RED.
2"HBD-262
MK450 V942A
MK292 V903
D-170473 SH.1 (F-12)
AIR TO ESSENTIAL INSTRUMENTS
MK450 V942B
A-170059 SH. 8 NOTE 3
MK455 V562
1/2"x1/4" RED.
1"HBD-262
MK452 V527
MK294 V904
NON-ESSENTIAL INSTRUMENTS AIR TO SERVICE BLDG.
1/2"x1/4" RED.
A-170059 SH. 6 NOTE 3
PS 504
MK454 V523
1/2"
1"x1/2" RED.
PAL
PS 510
MK454 V855
PI 4004B
PT 502
V1075
1/2"
MK454 V522
1"x1/2" RED.
PT 512
LOADS AND UNLOADS COMPRESSOR WHEN IN HEADER MODE
MK291 V902
FO
ZS
MK449A V507
MK449A V502
MK195 V511
MK449A V503
3"HBD-262
HBD-261
HBD-262
MK449A V506A
MK449A V1086
MK449A V506B
AFTERFILTER F002A
AFTERFILTER F002B
AIR DRYER MA102A F001A SEE NOTE 9
AIR DRYER MA102A F001B SEE NOTE 9
Turbine Bldg air system
VENDOR SUPPLIED SEE AIR DRYER DETAIL D-170131 SH.2 (TYP. 2 PLS.)
PREFILTER F501A
PREFILTER F501B
3"HBD-261
4"X3" RED.
MK449 V505A
MK449 V505B
NOTES:
1. THE SYSTEM IDENTIFICATION NUMBER IS N1P19 UNLESS NOTED OTHERWISE

Date: 9/6/2007

Time : 01:41:20 PM

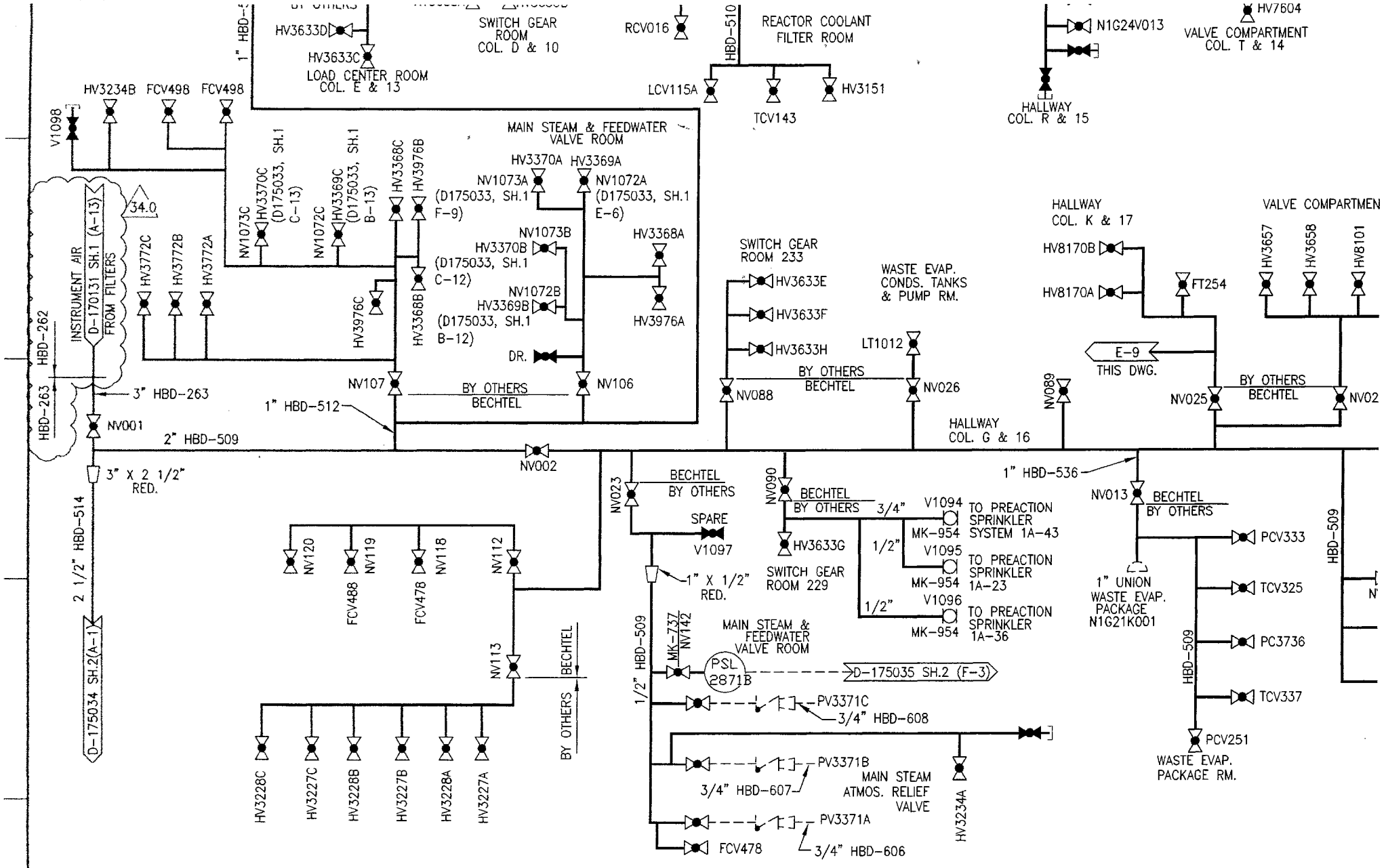

BY	CHK'D	PROJ ENGR	D'SGN DEPT	D'SGN DEPT	SUPV ENGR	BECH	BY	CHK'D	PROJ ENGR	D'SGN DEPT	D'SGN DEPT	SUPV ENGR	BECH	BY	CHK'D	PROJ ENGR	D'SGN DEPT	D'SGN DEPT	SUPV ENGR	BECH	BY	CHK'D	PROJ ENGR	D'SGN DEPT	D'SGN DEPT	SUPV ENGR	BECH	BY	CHK'D	PROJ ENGR	D'SGN DEPT	D'SGN DEPT	SUPV ENGR	BECH	BY	CHK'D	PROJ ENGR	D'SGN DEPT	D'SGN DEPT	SUPV ENGR	BECH	BY	CHK'D	PROJ ENGR	D'SGN DEPT	D'SGN DEPT	SUPV ENGR	BECH	BY

VER. NO. ____ DATE ____ VER. NO. ____ DATE ____ VER. NO. ____ DATE ____ VER. NO. ____ DATE ____ VER. NO. ____ DATE ____ VER. NO. ____ DATE ____ VI

Title: C:\HLT-31 NRC EXAM\Reference Disk\Exam Reference Disk\Drawings\D175034-0001.cal

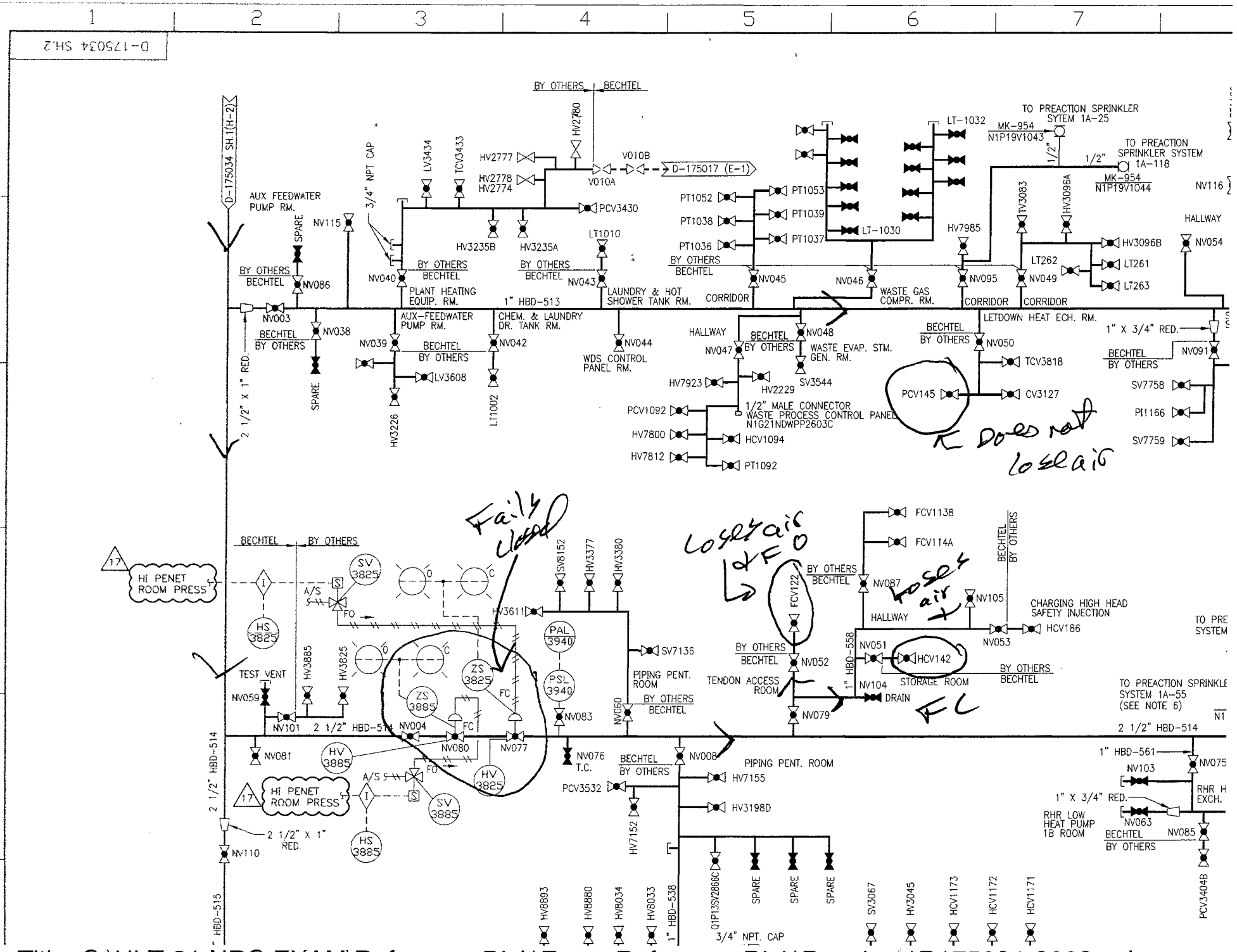
D-175034 SH.2
D-175034 SH.1(H-2)
D-175017 (E-1)
BY OTHERS
BECHTEL
AUX FEEDWATER PUMP RM.
SPARE
NV115
3/4" NPT CAP
LV3434
TCV3433
HV2777
HV2778
HV2774
HV2780
V010B
V010A
PCV3430
HV3235B
HV3235A
LT1010
NV086
NV040
NV043
PLANT HEATING EQUIP. RM.
1" HBD-513
LAUNDRY & HOT SHOWER TANK RM.
PT1052
PT1038
PT1036
PT1053
PT1039
PT1037
LT-1030
LT-1032
CORRIDOR
NV045
NV046
WASTE GAS COMPR. RM.
HV7985
NV095
NV049
LT262
LT261
LT263
HV3096B
HV3083
HV3096A
TO PREACTION SPRINKLER SYTEM 1A-25
MK-954
N1P19V1043
1/2"
TO PREACTION SPRINKLER SYSTEM 1A-118
MK-954
N1P19V1044
NV116
HALLWAY
NV054
NV003
NV038
AUX-FEEDWATER PUMP RM.
CHEM. & LAUNDRY DR. TANK RM.
NV039
NV042
LV3608
HV3226
LT1002
WDS CONTROL PANEL RM.
NV044
HALLWAY
NV047
NV048
WASTE EVAP. STM. GEN. RM.
SV3544
HV7923
HV2229
PCV1092
HV7800
HV7812
1/2" MALE CONNECTOR
WASTE PROCESS CONTROL PANEL
N1G21NDWPP2603C
HCV1094
PT1092
LETDOWN HEAT ECH. RM.
NV050
TCV3818
CV3127
PCV145
1" X 3/4" RED.
NV091
SV7758
PI1166
SV7759
2 1/2" X 1" RED.
Does not lose air
Fail closed
Lose air & FO
Lose air
FC
HI PENET ROOM PRESS
SV 3825
HS 3825
A/S
FO
HV3611
SV8152
HV3377
HV3380
PAL 3940
PSL 3940
SV7136
PIPING PENT. ROOM
NV060
NV083
TEST VENT
NV059
HV3885
HV3825
ZS 3825
ZS 3885
FC
NV101
2 1/2" HBD-514
NV004
NV080
NV077
NV081
HV 3885
HV 3825
NV076
T.C.
PCV3532
HV7152
NV008
PIPING PENT. ROOM
HV7155
HV3198D
SV 3885
HS 3885
2 1/2" X 1" RED.
NV110
2 1/2" HBD-514
1" HBD-515
FCV1138
FCV114A
NV087
FCV122
NV105
CHARGING HIGH HEAD SAFETY INJECTION
HCV186
NV053
NV051
HCV142
STORAGE ROOM
NV052
TENDON ACCESS ROOM
NV104
DRAIN
NV079
1" HBD-558
TO PREACTION SPRINKLE SYSTEM 1A-55 (SEE NOTE 6)
2 1/2" HBD-514
1" HBD-561
NV103
NV075
1" X 3/4" RED.
RHR LOW HEAT PUMP 1B ROOM
NV063
NV085
RHR H EXCH.
PCV3404B
HV8893
HV8880
HV8034
HV8033
1" HBD-538
Q1P13SV2866C
SPARE
SV3067
HV3045
HCV1173
HCV1172
HCV1171
3/4" NPT. CAP

5.10 WHEN pressurizer temperature increases to the saturation temperature for 375 psig (approximately 442°F) as indicated by increasing RCS pressure or letdown flow, THEN establish a steam space in the pressurizer as follows:

____ / 5.10.1 Decrease charging flow to minimum.

____ / 5.10.2 Adjust SEAL WTR INJECTION HIK 186 as required to maintain 6-13 gpm seal flow to each RCP.

5.10.3 Operate pressurizer heaters to maintain RCS pressure 325-375 psig.

- 1A PRZR HTR GROUP BACKUP ON-AUTO-OFF
- 1B PRZR HTR GROUP BACKUP ON-AUTO-OFF
- 1C PRZR HTR GROUP VARIABLE ON-AUTO-OFF
- 1D PRZR HTR GROUP BACKUP ON-AUTO-OFF
- 1E PRZR HTR GROUP BACKUP ON-AUTO-OFF

____ / 5.10.4 Adjust LP LTDN PRESS PK 145 to maintain approximately 120 gpm.

____ / 5.10.5 WHEN VCT level increases to 81%, THEN verify VCT HI LVL DIVERT VLV Q1E21LCV115A in the fully diverted position.

____ / 5.10.6 IF desired, THEN place excess letdown in operation to expedite formation of a steam space in the pressurizer per FNP-1-SOP-2.7, CHEMICAL AND VOLUME CONTROL SYSTEM EXCESS LETDOWN.

5.10.7 WHEN pressurizer level reaches 21%, THEN perform the following:

____ / 5.10.7.1 Place CHG FLOW FK-122 in AUTO.

____ / 5.10.7.2 Verify pressurizer level is maintained at approximately 21%.

13. 008 A2.08 001/NEW//HIGHER//RO/FARLEY/11/2007/NO

Given the following:

- Unit 1 is at 100% power.
- The temperature input to TCV-3083, Letdown Heat Exchanger Outlet Temperature Control Valve, fails low.

Which ONE of the following describes the effect on the unit and the action required?

A. A small RCS dilution may occur; place temperature controller TK-144 in MANUAL and raise CCW flow.

B. A small RCS dilution may occur; place temperature controller TK-144 in MANUAL and lower CCW flow.

C. A small RCS boration may occur; place temperature controller TK-144 in MANUAL and raise CCW flow.

D. A small RCS boration may occur; place temperature controller TK-144 in MANUAL and lower CCW flow.

A incorrect; because a dilution is indicated to occur. It is plausible because the TCV failure does cause a temperature change, just opposite from the change that will cause a dilution.

B incorrect; because a dilution is indicated to occur. It is plausible because the TCV failure does cause a temperature change, just opposite from the change that will cause a dilution.

C is correct. If the temperature input fails low, the TCV will close to lower cooling water flow. As letdown water heats up, boron will be released in ion exchangers, resulting in a small boration.

D incorrect; because the action is opposite of what should be performed. Credible because the applicant may confuse the TCV failure.

Ability to (a) predict the impacts of the following malfunctions or operations on the CCWS, and (b) based on those predictions, use procedures to correct, control, or mitigate the consequences of those malfunctions or operations: Effects of shutting (automatically or otherwise) the isolation valves of the letdown cooler

Question Number: 9

Tier 2 Group 1

Importance Rating: 2.5

Technical Reference: CVCS LP, SOP-2.1, Sec 4.18 & 4.19 cautions
Proposed references to be provided to applicants during examination: None
Learning Objective:
10 CFR Part 55 Content: 41.7

Comments:

Source :	NEW	Source if Bank:	
Cognitive Level:	HIGHER	Difficulty:	
Job Position:	RO	Plant:	FARLEY
Date:	11/2007	Previous NRC?:	NO

4.17.11 Re-install flanges downstream of 1A (1B, 1C) RCP Seal Inj Drn, Q1E21V104A (B, C), as applicable.

4.18 LTDN Temperature Bypass Control

CAUTION:	**Changes in letdown temperature can have a significant effect on reactor power. Care should be taken to closely coordinate changes in CCW flow between personnel at LTDN HX CCW TEMP CONT BYP, Q1P17V123, and Control Room personnel at LTDN HX OUTLET TEMP TK144.**

4.18.1 IF desired, THEN trend the following computer points:

- TE0144, LETDOWN HX LETDOWN OUTLET TEMP
- TE0116, VOLUME CONTROL TANK TEMP

4.18.2 Establish communication between Control Room and letdown temperature control valve.

4.18.3 Determine existing CCW temperature and flow using local indicators:

- LETDOWN HX DISCH, N1P17TI3073
- LETDOWN HX DISCH, N1P17FI3074

4.18.4 Verify LTDN HX OUTLET TEMP TK144 is in MANUAL.

NOTE:	**The following step should be done in small increments over several minutes to maintain temperature and flow at values approximate to those determined above.**

4.18.5 By direction of Control Room Operator, slowly open Ltdn Hx CCW Temp Cont Byp, Q1P17V123, while Control Room Operator closes Letdn Hx Component Cooling Water Disch TCV, Q1P17TV3083, using LTDN HX OUTLET TEMP TK144.

4.18.6 WHEN TK144 is closed (100% demand), THEN close Ltdn Hx CCW Outlet Temp Cont Iso, Q1P17V033B.

4.18.7 Check CCW temperature and flow are stable.

4.18.8 Close Ltdn Hx CCW Inlet Temp Cont Iso, Q1P17V033A.

4.18.9 Check CCW temperature and flow are stable.

4.18.10 WHEN ready to restore LTDN TEMP CONT VLV to normal automatic operation, THEN perform the following:

4.18.10.1 Determine existing CCW temperature and flow using local indicators:

- LETDOWN HX DISCH, N1P17TI3073
- LETDOWN HX DISCH, N1P17FI3074

4.18.10.2 Open Ltdn Hx CCW Inlet Temp Cont Iso, Q1P17V033A.

4.18.10.3 Check CCW temperature and flow are stable.

4.18.10.4 Open and seal Ltdn Hx CCW Outlet Temp Cont Iso, Q1P17V033B.

4.18.10.5 Check CCW temperature and flow are stable.

NOTE: The following step should be done in small increments over several minutes to maintain temperature and flow at values approximate to those determined above.

4.18.10.6 By direction of Control Room Operator, slowly close Ltdn Hx CCW Temp Cont Byp, Q1P17V123, while Control Room Operator opens Letdn Hx Component Cooling Water Disch TCV, Q1P17TV3083, using LTDN HX OUTLET TEMP TK144.

4.18.10.7 Verify setting on LTDN HX OUTLET TK144 is correct for current temperature and place TK144 in AUTOMATIC.

CAUTION:	**Changes in letdown temperature can have a significant effect on reactor power. Care should be taken to closely coordinate changes in CCW flow between personnel at LTDN HX CCW TEMP CONT, Q1P17TV3083, and Control Room personnel at LTDN HX OUTLET TEMP TK144.**

4.19 LTDN Temperature Control Manual Jacking Operation

4.19.1 IF desired, THEN trend the following computer points:

- TE0144, LETDOWN HX LETDOWN OUTLET TEMP
- TE0116, VOLUME CONTROL TANK TEMP

4.19.2 Establish communication between Control Room and letdown temperature control valve.

4.19.3 Determine existing CCW temperature and flow using local indicators:

- LETDOWN HX DISCH, N1P17TI3073
- LETDOWN HX DISCH, N1P17FI3074

4.19.4 Remove seal from Q1P17TV3083-JACK, Ltdn Hx CCW Temp Cont (Hand Jack Device).

4.19.5 Place TK144, LTDN HX OUTLET TEMP, in MANUAL.

4.19.6 Slowly rotate Q1P17TV3083-JACK, Ltdn Hx CCW Temp Cont (Hand Jack Device), in the closed (clockwise) direction until jacking device indicator shaft makes contact with handwheel arm fork.

4.19.7 Check CCW temperature and flow are stable.

4.19.8 Fail air to Letdn Hx Component Cooling Water Disch TCV, Q1P17TV3083.

4.19.9 Check CCW temperature and flow are stable.

4.19.10 By direction of the Control Room Operator, slowly adjust Q1P17TV3083-JACK, Ltdn Hx CCW Temp Cont (Hand Jack Device), to control letdown temperature.

4.19.11 WHEN ready to restore Letdn Hx Component Cooling Water Disch TCV, Q1P17TV3083, to normal automatic operation, THEN perform the following:

4.19.11.1 IF desired, THEN trend the following computer points:

- TE0144, LETDOWN HX LETDOWN OUTLET TEMP
- TE0116, VOLUME CONTROL TANK TEMP

4.19.11.2 Determine existing CCW temperature and flow using local indicators:

- LETDOWN HX DISCH, N1P17TI3073
- LETDOWN HX DISCH, N1P17FI3074

4.19.11.3 Verify LTDN HX OUTLET TEMP TK144 is in MANUAL with output of 0 (zero) %.

4.19.11.4 Restore air to Letdn Hx Component Cooling Water Disch TCV, Q1P17TV3083.

4.19.11.5 Check CCW temperature and flow are stable.

NOTE: The following step will slightly close LTDN HX CCW TEMP CONT, Q1P17TV3083, resulting in an elevated letdown temperature.

4.19.11.6 Slowly raise output on LTDN HX OUTLET TEMP TK144, until jacking device indicator shaft is no longer in contact with handwheel arm fork **OR** there is a noted reduction in CCW flow on LETDOWN HX DISCH, N1P17FI3074.

4.19.11.7 Return Q1P17TV3083-JACK, Ltdn Hx CCW Temp Cont (Hand Jack Device), to neutral position.

4.19.11.8 Adjust LTDN HX OUTLET TEMP TK144 to restore letdown temperature.

4.19.11.9 Verify setting on LTDN HX OUTLET TK144 is correct for current temperature and place in AUTOMATIC.

4.19.11.10 Seal Q1P17TV3083-JACK, Ltdn Hx CCW Temp Cont (Hand Jack Device), in neutral position.

LOCATION DF1

F1	LTDN TO DEMIN DIVERTED-TEMP HI

SETPOINT: 135°F

ORIGIN: 1-TY-143X Auxiliary Relay actuated by Temperature Bistable (N1E21TB143)

PROBABLE CAUSE

1. Low or Loss of CCW Flow to the Letdown Heat Exchanger.
2. Letdown Flow greater than Charging Flow.

AUTOMATIC ACTION

1. Letdown High Temperature Divert Valve Q1E21TCV143 diverts Letdown Flow to the VCT. {CMT 0008644}

OPERATOR ACTION

1. Ensure that letdown flow is diverted to the VCT.
2. Monitor charging and letdown flows and temperatures.
3. Take manual control of LTDN HX Outlet Temp TK-144 and attempt to increase CCW flow to the Letdown Heat Exchanger.
4. Adjust charging or letdown flow as required to reduce the letdown flow temperature.
5. IF letdown temperature can NOT be reduced, THEN close LTDN ORIF ISO 45 (60) GPM Q1E21HV8149A, B, and C.

NOTE: Transients that will require boration or dilution should be avoided if letdown has been secured.

6. IF a ramp is in progress, THEN place turbine load on HOLD
7. Go to FNP-1-AOP-16.0, CVCS MALFUNCTION to address the loss of letdown flow.

References: A-177100, Sh. 206; D-175039, Sh.2; D-177091; D-177375; U-175997; PLS Document

14. 008 AK2.01 004/BANK/WTSI/HIGHER//RO/VC SUMMER AUDIT/5/2007/

Given the following plant conditions:

- Reactor power and turbine load are stable
- PRZR PRESS is 2180 psig and decreasing
- PRZR LVL is stable
- VCT level is stable
- PRZR Liquid and Vapor temperatures are approximately 645°F and decreasing

Which ONE (1) of the following describes the event in progress?

A. The controlling PRZR pressure control pressure transmitter has failed low.

B. A PRZR Spray Valve has failed open.

C. The PRZR Surge Line has developed a leak.

D. A PRZR PORV has developed a leak.

A INCORRECT If the controlling PRZR pressure control pressure transmitter failed low, heaters would energize and PRZR Liquid and Vapor temperatures, as well as pressure, would increase.

B CORRECT If the spray valve failed open, pressurizer temperature and pressure would decrease, with no mass change indicated by levels in the PRZR or VCT.

C INCORRECT If the surge line were leaking, level in the PRZR and/or the VCT would be affected.

D INCORRECT If a PORV was leaking, level would be dropping in either the VCT or PRZR.

Knowledge of the interrelations between the Pressurizer Vapor Space Accident and the following: Valves

Question Number: 39

Tier 1 Group 1

Importance Rating: RO 2.7

Technical Reference: AOP-100, HC1 ARP-1.8
Proposed references to be provided to applicants during examination: None
Learning Objective:
10 CFR Part 55 Content:

Comments:

Source :	BANK	Source if Bank:	WTSI
Cognitive Level:	HIGHER	Difficulty:	
Job Position:	RO	Plant:	VC SUMMER AUDIT
Date:	5/2007	Previous NRC?:	

SECTION 1.1

Figure 1

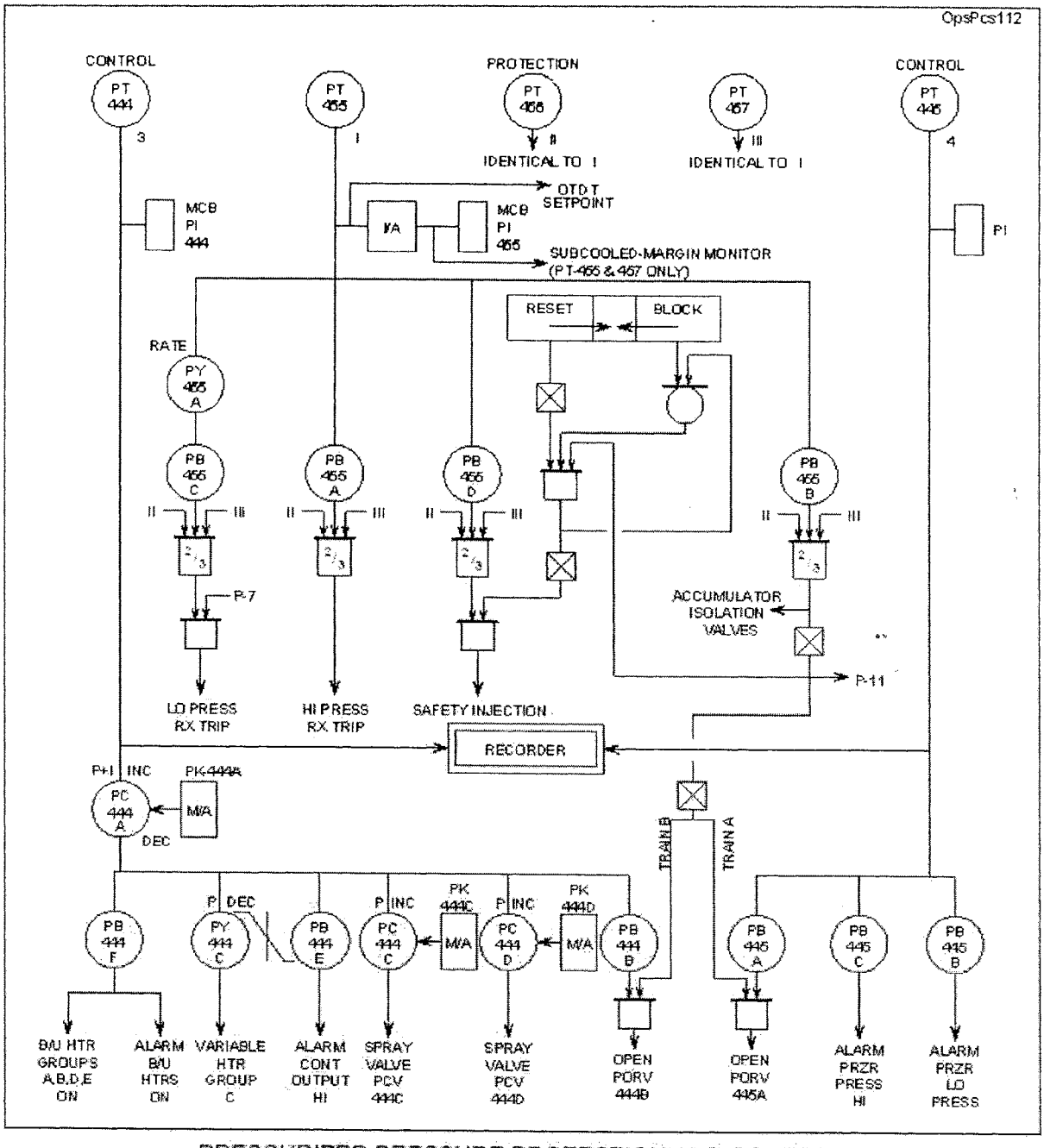

PRESSURIZER PRESSURE PROTECTION AND CONTROL

LOCATION HC1

C1
PRZR PRESS HI-LO

SETPOINT:
1. High Pressure: 2310 PSIG
2. Low Pressure: 2185 PSIG

ORIGIN:
1. Pressure Bistable PB-445C (high) from Pressure Transmitter PT-445.
2. Pressure Bistable PB-445B (low) from Pressure Transmitter PT-445.

PROBABLE CAUSE

1. High Pressure
   a) Malfunction of Pressurizer Heaters and/or Spray Valves.
   b) Plant Transient
   c) Rod Control System malfunction
2. Low Pressure
   a) Primary Coolant leakage or rupture
   b) Malfunction of Pressurizer Heaters and/or Spray Valves.
   c) Power Operated Relief Valve leakage or malfunction.
   d) Plant Transient
   e) Rod Control System malfunction
   f) Uncontrolled or excessive cooldown
   g) Normal cooldown / depressurization
3. Instrument failure

AUTOMATIC ACTION

NONE

OPERATOR ACTION

1. Check pressurizer pressure indications and determine if pressure is high or low.
2. Check the status of the following and take manual control as necessary:
   2.1 Pressurizer spray valves.
   2.2 Pressurizer power operated relief valves (PORVs).
   2.3 Pressurizer heaters.
3. IF an instrument failure has occurred, THEN go to FNP-1-AOP-100, INSTRUMENT MALFUNCTION.

15. 009 EA1.17 001/BANK/SONGS 2005/HIGHER//RO/FARLEY/11/2007/NO

Given the following:

- A reactor trip and safety injection have occurred.
- RCS pressure is 1450 psig.
- Containment pressure is 7.5 psig.
- SG pressures are 1000 psig.
- All equipment has operated as designed.

Which ONE of the following describes where RCP seal return flow is being directed?

A. VCT

B. PRT

C. RCDT

D. Containment Sump

A is incorrect. credible because it is the normal #1 seal flowpath.

B is correct. Containment isolation will isolate seal return flow, and the seal return relief valve will lift to the PRT.

C is incorrect. credible because it is the #2 seal flowpath.

D is incorrect. credible because the RCDT is also connected to the containment sump.
Ability to operate and monitor the following as they apply to a small break LOCA: PRT

Question Number: 40

Tier 1 Group 1

Importance Rating: RO 3.4

Technical Reference: OPS-52101F
Proposed references to be provided to applicants during examination:
Learning Objective:
10 CFR Part 55 Content:

Comments:

Source :	BANK	Source if Bank:	SONGS 2005
Cognitive Level:	HIGHER	Difficulty:	
Job Position:	RO	Plant:	FARLEY
Date:	11/2007	Previous NRC?:	NO

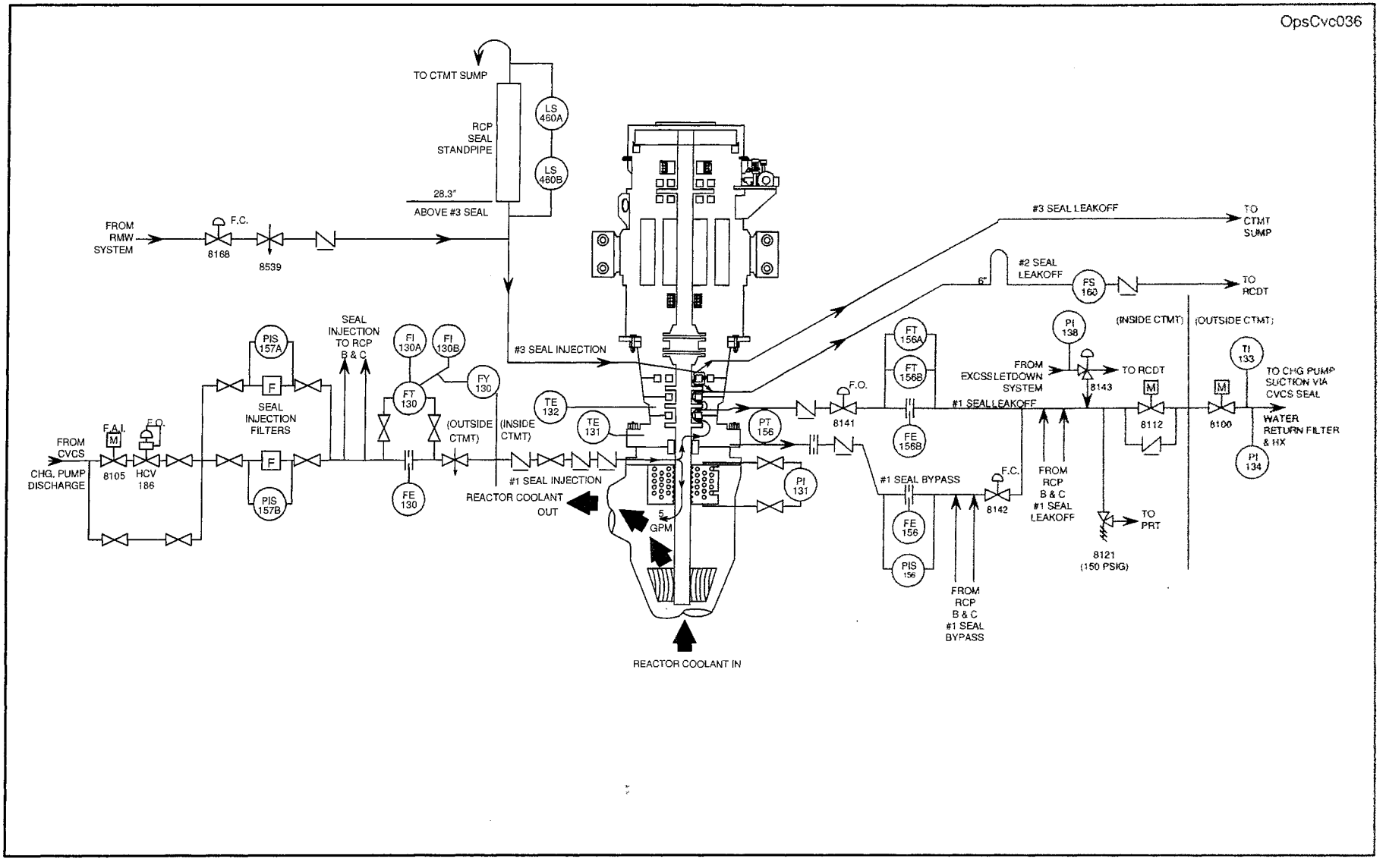

RCP-Seal Injection System

Figure 4

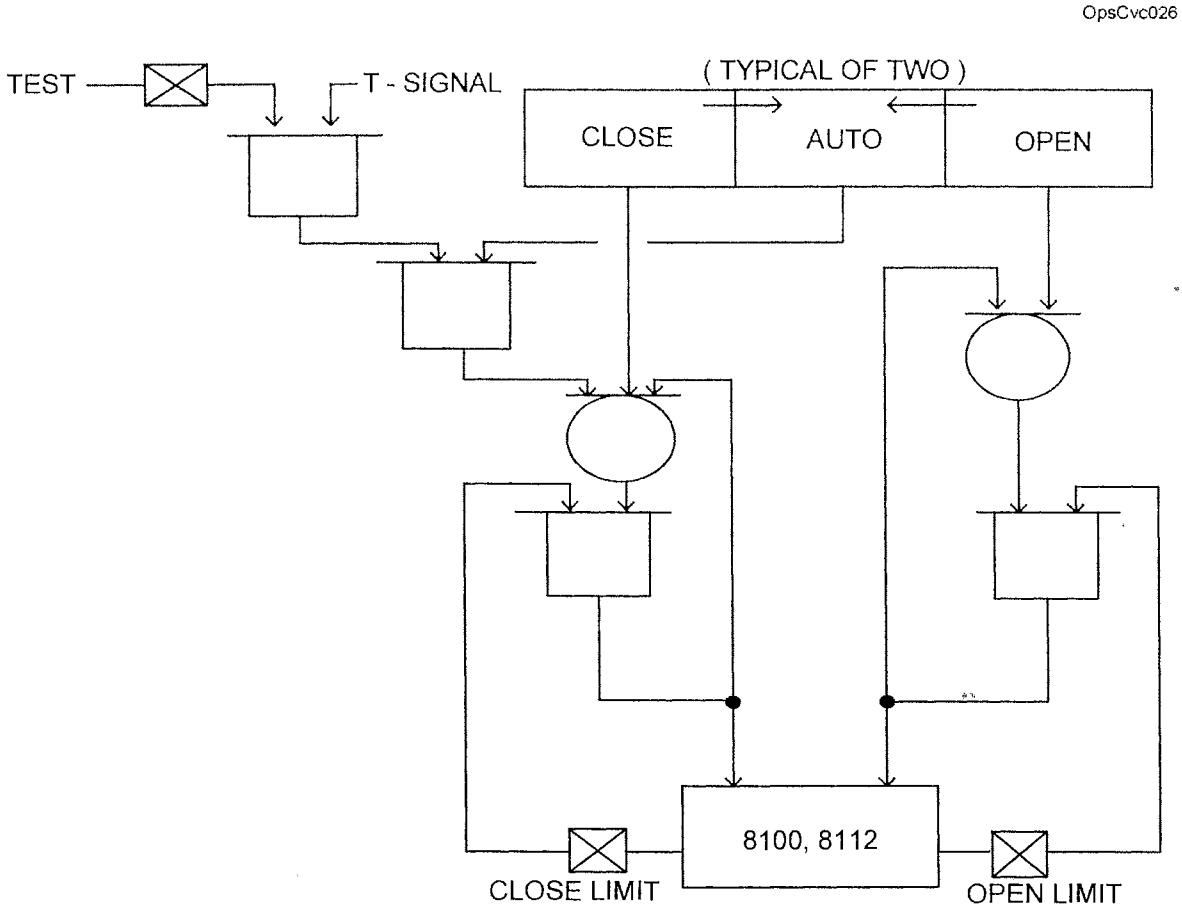

Seal Water Return Isolation Valve (8100 and 8112) Logic

Figure 15

17. 010 K3.01 002/NEW//HIGHER//RO/010K3.01//NO

Given the following:

- The plant is at 100% power.
- All control systems are in their normal alignments, with the exception of the Pressurizer Pressure Master Controller, which is in MANUAL.
- PK-444A, Pressurizer Pressure Master Controller, demand fails LOW.

Which ONE of the following describes the effect on RCS pressure and the reason for that effect?

A. RCS pressure rises due to pressurizer variable group heater energization only.

B. RCS pressure rises due to pressurizer backup group heater energization.

C. RCS pressure lowers due to pressurizer heater deenergization and PRZR spray valve operation only.

D. RCS pressure lowers due to pressurizer heater deenergization and PRZR spray valve and PORV operation.

A incorrect; because pressure will rise. Credible because it is consistent with a setpoint failure instead of a demand/output failure

B incorrect; because pressure will rise. Credible because it is consistent with a setpoint failure instead of a demand/output failure

C incorrect; credible because the failure is correct. Plant response is incorrect

D correct. As demand is lowered, it is calling for pressure to be reduced. Pressure will be reduced by heaters turning off, and subsequently, spray valve operation. PORV 444B is controlled from the master controller, and it will open.

Knowledge of the effect that a loss or malfunction of the PZR PCS will have on the following: RCS

Question Number: 10

Tier 2 Group 1

Importance Rating: 3.8

Technical Reference: AOP-100, OPS-52201H
Proposed references to be provided to applicants during examination: None
Learning Objective:
10 CFR Part 55 Content: 41.7

Comments:

Source :	NEW	Source if Bank:	
Cognitive Level:	HIGHER	Difficulty:	
Job Position:	RO	Plant:	010K3.01
Date:		Previous NRC?:	NO

4. One power-operated relief valve (PCV-444B)

5. Control pressure high annunciator

The pressure input to the master pressure controller channel is from pressurizer pressure detector PT-444. This pressure input is compared with an operator-selected pressure setpoint to give an error signal. The error signal produced is processed through a proportional-plus-integral (P+I) controller, where the error signal is conditioned to produce a compensated output.

The P portion of the P+I controller produces an output that is directly proportional to the input and is also multiplied by an amplification factor (gain). The I portion of the controller produces an output equivalent to the integral of the error signal (also known as the reset).

The longer an error exists, the larger the integral output becomes. This means that there may be an output from the integral section of the controller when there is no longer a pressure error.

The conditioned ERROR signal is developed in the pressurizer pressure master controller located in the process racks. With the master controller in AUTOMATIC (as selected by manual/auto (M/A) station PK-444A on the MCB), the reference pressure may be varied by adjusting a potentiometer dial. The potentiometer is normally set so that in automatic, the pressurizer heaters, spray valves, and PORVs will control plant pressure at 2235 psig. Variation of the reference setpoint will result in automatic control of plant pressure at a value other than 2235 psig.

The I portion of the P+I controller may cause pressure to be controlled above or below the nominal 2235 psig setpoint following a transient. The off-nominal pressure is normal following a transient. The operator should not adjust the setpoint on the M/A station during these transients. Indication of control demand is shown by a meter on PK-444A. On this meter, indication going towards zero percent means the system is trying to lower pressure, and indication going towards 100% means the system is trying to raise pressure.

Selecting MANUAL on PK-444A allows the operator to directly control components such as pressurizer spray valves and pressurizer heaters. In MANUAL, the normal automatic controller output is interrupted, and the output depends on two manual push buttons on PK-444A. The INCREASE push button causes the controller to raise pressure, while the DECREASE push button causes the controller to lower pressure. This signal is neither rate nor

integral compensated. As will be seen in the discussion of individual components, a control demand less than 50 percent in either AUTO or MANUAL is a demand to lower plant pressure. A control demand greater than 50 percent is a demand to raise plant pressure.

The variable heaters control reactor coolant system pressure during steady-state operation and are operated by a two-position ON/OFF switch located on the MCB. This switch is normally selected to the ON position, which closes the variable heater circuit breaker at the 600V LC M. A silicon-controlled rectifier (SCR) is between the variable heater circuit breaker and the heaters themselves. This solid-state device determines the voltage of the electrical power delivered to the variable heaters.

The SCR controller receives a control input from the master pressure controller channel. When the control input is high (the actual pressure is less than the setpoint), the heaters will receive the full voltage from the SCR controller. When the control input is low, the SCR controller does not allow current flow to the heaters. The control signal to the SCR operates in a band equivalent to a ± 15 psig error (2220 to 2250 psig if the AUTO set point is 2235 psig). Faults in the SCR controller energize the PRZR HTR CONT TRBL (pressurizer heater controller trouble) annunciator on the MCB.

The pressurizer back-up heaters are operated by separate three-position ON/AUTO/OFF switches located on the MCB. There is a need for pressurizer heaters to maintain plant pressure after certain types of accidents, such as a station blackout. For this reason, group A and group B heaters can be alternately powered by emergency buses (600V LC A (Emerg) and 600V LC C (Emerg) respectively). These two heater groups also have local controls and LOCAL/REMOTE control transfer switches on the hot shutdown panel. If the group A or group B pressurizer heaters are placed in local control, the PRZR HTRS IN LOCAL CONT (pressurizer heaters in local control) annunciator on the MCB energizes. Back-up heater groups D and E are powered from 600V LC M and 600V LC N, respectively.

In the event of a loss of site power (LOSP), the emergency section of load control center (LCC) 1A will automatically align to LCC 1D. This makes power available for the 1A pressurizer heater group from the diesel generator supplying the emergency buses via LCC 1D. A handswitch located on the MCB (PRZR HTR GRP 1A BLOCKING/BYPASS SW) is interlocked with the supply breaker for the 1A heaters EA-11. This key-operated handswitch

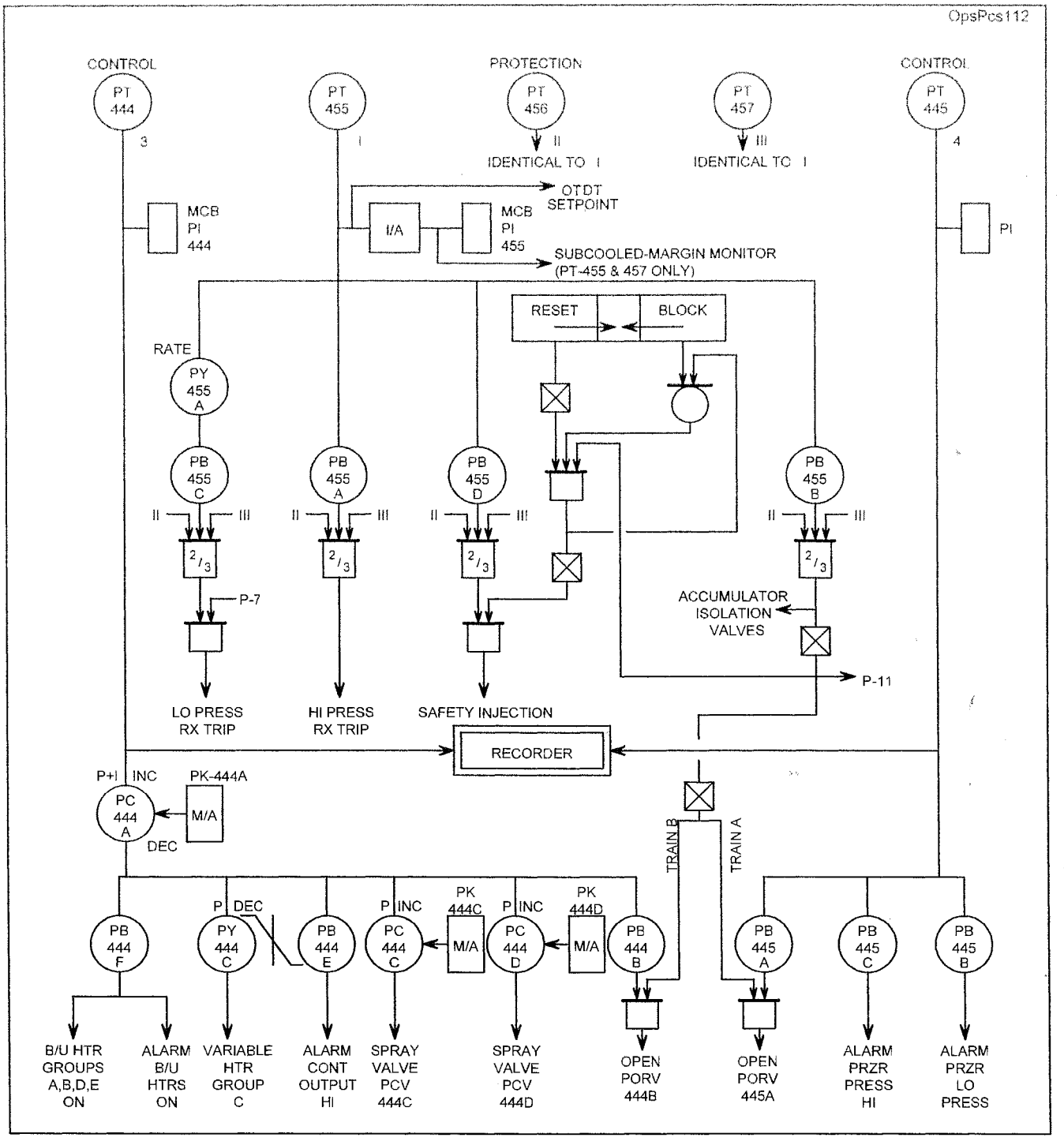

Pressurizer Pressure Protection and Control

Figure 3

19. 011 A3.03 001/BANK/VOGTLE 2002/HIGHER//RO/FARLEY/11/2007/NO

Given the following:

- Unit is at 50% power.
- All automatic control systems are in their normal lineup.
- The Pressurizer program level signal fails to the current value.
- Assume no operator action is taken.

Which of the following describes the effect on charging flow and PRZR level as the plant load is increased to 100%?

A. Actual PRZR level remains constant and charging flow remains constant.

B. Actual PRZR level decreases and charging flow decreases.

C. Actual PRZR level remains constant and charging flow decreases.

D. Actual PRZR level increases and charging flow remains constant.

A is incorrect because Tavg increases as power increases which will make PRZR actual level increase until program level provides an error signal to bring the level back down the 50% program level. This will cause charging to decrease.

B is incorrect, same reason as A.

C is correct because as PRZR level rises with coolant expansion due to Tavg increase, with LT-459 output at 50%, an error is generated that PRZR level is too high, causing charging flow to decrease, and level to come down to the 50% level.

D is incorrect, same reason as A for PRZR level, charging flow increases, see reason C.

Ability to monitor automatic operation of the PZR LCS, including: Charging and letdown

Question Number: 31

Tier 2 Group 2

Importance Rating: 3.2

Technical Reference: PZR level/Press LP OPS-52101E & H, UOP-3.1
Proposed references to be provided to applicants during examination: None
Learning Objective:
10 CFR Part 55 Content: 41.7

Comments:

Source :	BANK	Source if Bank:	VOGTLE 2002
Cognitive Level:	HIGHER	Difficulty:	
Job Position:	RO	Plant:	FARLEY
Date:	11/2007	Previous NRC?:	NO

2.0 Initial Conditions

NOTE:	**WHEN a rapid load reduction is in progress, THEN entry conditions for the Instructions section of this procedure are satisfied when the double asterisk steps (**) are performed. Perform the non-asterisk steps as conditions permit.**

The plant is operating between 15-100% power with the following plant conditions:

NOTE:	**Systems should be in automatic control for normal operations; however, in the event of off-normal conditions operation is permitted in manual control if required.**

2.1 The rod control system is in automatic or manual and maintaining TAVG equal to TREF ± 1.5°F.

2.2 RCS pressure is being maintained between 2220 and 2250 psig with pressurizer heaters, spray valves, and PORVs in automatic.

2.3 Pressurizer level is being maintained at the programmed level ± 2% with normal letdown and charging flow in automatic.

2.4 The steam generators are being maintained at 61-69% with the main feed water pump(s) in AUTO AND main feed regulating valves open in MANUAL or AUTO AND main feed bypass valves open in automatic or manual.

NOTE:	**The following condition is not required during specific operation when a dilution or boration is in progress.**

**2.5 Reactor makeup is in automatic and set at blended flow equal to the existing RCS boron concentration.

**2.6 The steam dump system is aligned for operation in the TAVG mode.

2.7 1A, 1B, and 1C 4160 V buses are aligned to the Unit Auxiliary transformers, IF desired.

2.8 Three reactor coolant pumps are running.

2.9 Generator hydrogen pressure is within the operating limits required by Figure 4, FNP-1-SOP-28.1, TURBINE GENERATOR OPERATION.

2.10 The Condensate Minimum Flow FCV handswitch, N1N21V908, is in the Auto position.

Even with the Pressurizer acting as a surge volume, RCS pressure will not always be constant. For example, a transient resulting in an insurge would raise the Pressurizer water level and compress the Pressurizer steam bubble. Compressing the steam bubble raises Pressurizer pressure, therefore, RCS pressure. For a small insurge and subsequent pressure increase, no automatic action would be required to maintain pressure within limitations. However, if the increase in pressure were large, the Pressurizer spray valves would automatically open. Opening the spray valves allows reactor coolant from the RCS cold leg to flow to the Pressurizer and to spray down through the Pressurizer steam bubble. The cold leg water, which is at a much lower temperature than the Pressurizer, condenses some of the steam, reducing RCS pressure. When RCS pressure returns to normal, the spray valves close, stopping spray flow and, therefore, any further reduction in pressure.

The Reactor Coolant Pumps (RCPs) provide the driving force for Pressurizer spray flow. If the RCPs are not running, the chemical and volume control system (CVCS) charging pumps can provide a source of auxiliary spray.

If the Pressurizer spray is not sufficient to stop the increase in pressure, the PORVs will open. Opening the PORVs removes steam and energy from the Pressurizer and should reduce RCS pressure. The PORVs are not taken credit for during the maximum possible Final Safety Analysis Report (FSAR) transient. If the PORVs do not control the RCS pressure rise, the code safety valves will open to relieve pressure to prevent the RCS pressure from exceeding the RCS design pressure limits.

The PORVs and code safety relief valves do not relieve reactor coolant to the containment atmosphere. Instead, the relief valves discharge below the water level in the PRT. The PRT, which normally contains 70 percent water at ambient temperature, condenses and cools the discharge. The water in the PRT is heated by the discharge and can be cooled by the reactor coolant drain tank's (RCDT) heat exchanger and returned to the PRT through a spray header. An alternate method for cooling the PRT water involves spraying reactor makeup water into the PRT and draining the excess water to the waste disposal system. Refer to SOP-1.2 for actual procedure operations concerning cooldown of the PRT.

A transient resulting in an outsurge from the Pressurizer would expand the steam bubble space and reduce RCS pressure. As pressure decreases, additional Pressurizer heaters would automatically energize to return the pressure to normal.

continued leakage. If a safety valve is determined to be leaking by its seat, the PRT parameters must be monitored to determine when cooldown, drain-down, and possible venting of the PRT is required.

Pressurizer Instrumentation

Instrumentation for the Pressurizer (Figure 3) is derived from eight penetrations--six for level and pressure detectors and two for temperature detectors.

Pressurizer Temperature

The two resistance temperature detectors are installed in thermowells, TE-454 in the steam space and TE-453 in the water space. The steam space detector, located near the top of the vessel, is used during startup to determine water temperature when the Pressurizer is completely filled with water. The water space detector, located at an elevation near the center of the heaters, is used during cooldown when the steam space detector response is poor due to poor heat transfer. Both detectors indicate on the MCB and have high temperature alarms (Annunciator HC5).

Pressurizer Level

There are five Pressurizer level detectors (Figure 3 and 5), all of which have separate indicators on the MCB and LT-459Z has a level indicator on the HSD panel. LT-459, 459Z, 460, and 461 are calibrated for hot operation, and LT-462 is calibrated for cold operation. LT-461, 459Z and 462 share common Pressurizer instrument penetrations. LT-459 also provides level indication in the lower equipment room, LT-459Z provides level indication on the HSP.

Level detectors LT-459, -460, and -461 are ΔP cells and use a sealed reference leg and condensate pot. This construction prevents reference leg flashing and the collection of Pressurizer H_2 gas in the reference leg, both of which can cause spurious level indication. LT-462, the cold calibrated channel, does not have a sealed reference leg.

The Pressurizer level control system (Figures 6) is programmed to maintain a constant inventory of water in the RCS during all normal plant operations. As the temperature increases, the density decreases and therefore a larger volume is required in order to maintain a constant mass. Maintaining a constant mass in the Pressurizer as RCS temperature increases from no load

T_{avg} to full load T_{avg} ensures that the Pressurizer heaters stay covered on an outsurge and that sufficient surge volume exists for an insurge.

The Pressurizer level is maintained at the programmed level by controlling CVCS letdown and charging. The programmed level varies with changes in the median T_{avg} (RCS loop average temperature). A level recorder on the MCB displays the programmed level setpoint and also displays one of the three hot calibrated level instrument outputs as determined by a three-position switch. The level control circuit compares the actual level with programmed level and sends the resulting error signal to the charging flow control valve. This, in turn, will cause charging flow to increase or decrease as required to make actual Pressurizer level equal to the programmed level.

Pressurizer level instruments (LT-459, 460, and 461) provide for Pressurizer level protective functions. If power is greater than 10 percent, a Pressurizer level of 92 percent on 1/3 level instruments will initiate a MCB (HA1) alarm. A reactor trip will be initiated if 2/3 level instruments sense a level of 92 percent. The same level instruments that provide for protective functions provide the level control functions.

Pressurizer Pressure

The Pressurizer has a total of seven pressure detectors (PT-444, 444Z, 445, 455, 456, 457, and 458) (Figure 3) that generate protection system signals, provide indication, and control primary system pressure. Indication has been provided on the MCB meters, MCB recorders, at the HSPs, and at the dead weight tester (for calibration). The protection system pressure detectors (PT-455, 456, and 457) will initiate a reactor trip if pressure on 2/3 detectors reaches 2385 psig. Pressurizer pressure less than 1865 psig (rate compensated) with power greater than 10 percent (as indicated by 2/3 detectors) will initiate a reactor trip. If Pressurizer pressure continues to decrease to 1850 psig on 2/3 detectors, a safety injection will be actuated. The safety injection may be blocked when 2/3 pressure detectors indicate less than 2000 psig (permissive P-11). The protection system pressure detectors also provide input to the overtemperature differential temperature (OTΔT) circuitry.

During plant shutdown and cool down to cold shutdown, the low Pressurizer pressure safety injection must be blocked before RCS pressure is reduced below the actuation setpoint.

If the reference leg leaks, pressurizer level indication will read erroneously high. This failure can be detected by comparison among the other independent level indications.

The ΔP between the reference leg and the variable leg is sensed by a bellows in the D/P cell. Maximum ΔP across the bellows results in an indicated level of 0% and zero ΔP across the bellows results in an indicated level of 100%. If a rupture were to occur in the bellows for the ΔP cell, then the ΔP across the bellows would be zero giving an indicated level at 100%. This failure can be detected by comparison among the other independent level indications.

LT-462 doesn't have a sealed reference leg. A large, rapid pressure drop will affect LI-462 accuracy by either causing gases to come out of solution or water to flash in the reference leg. Both of these events will cause indicated level to be greater than actual level.

Master Level Control Channel

The master controller (Figure 7) of the pressurizer level control system controls the charging flow to maintain the actual level at the program setpoint. The system uses charging flow rate, actual pressurizer level, and programmed level as control inputs. The master controller also provides input to the low level heater cutoff circuit, the orifice isolation valve interlock circuitry, and the letdown isolation valve interlock circuitry for LCV-459. The level channel input to the master controller can be selected to one of two hot calibrated instrument channels with the pressurizer level control selector switch (LS-459Z). If the three-position switch (I/III, I/II, III/II) is in the I/II position, then LT-459 (protection channel I) provides the input to the master controller. The other two switch positions, I/III and III/II, work in a similar manner to that described for CHAN I/II. For a discussion of the orifice isolation and letdown valves, refer to the Chemical and Volume Control lesson plan.

The level control circuitry uses median loop T_{avg}. The median T_{avg} signal is processed to obtain the programmed level. (See Figure 8.) Programmed level is compared with actual level to give a level error. The level error is used to do the following (See Figure 6.):

1. The back-up heaters energize on a +5 percent level deviation and actuate the PRZR LVL DEV HI B/U HTRS ON (pressurizer level deviation high back-up heaters on) annunciator on the MCB.

20. 012 A2.02 002/NEW//HIGHER//RO/FARLEY/10/2007/NO

Given the following:

- A reactor startup is in progress.
- Power is approximately $6X10^3$ CPS on both source range instruments.
- The Instrument Power fuses on source range N-31 blow.

Which ONE (1) of the following describes the effect on the plant and action required?

A.✓ The reactor trips; Perform actions of EEP-0, Reactor Trip or Safety Injection. Technical Specification actions apply.

B. The reactor trips; Perform actions of EEP-0, Reactor Trip or Safety Injection. Technical Specification actions do NOT apply.

C. The reactor does NOT trip; Discontinue the startup while replacing the fuses; Technical Specification actions apply.

D. The reactor does NOT trip; Discontinue the startup while replacing the fuses; Technical Specification actions do NOT apply.

A is correct. At this power, two SR NIs are required by TS, the SR High Flux Trip is not blocked and the level trip bypass switch is in Normal. Losing instrument power will trip the bistable.

B is incorrect because TS do apply in Mode 3 for SR NIs. Credible because a trip occurs.

C is incorrect because a trip does occur. Credible because there are 2 conditions that would prevent a reactor trip for this failure. Neither condition is present for this event, however (SR flux trip blocked; Level Trip Bypass in Bypass).

D is incorrect because a trip does occur. Credible because there are 2 conditions that would prevent a reactor trip for this failure. Neither condition is present for this event, however (SR flux trip blocked; Level Trip Bypass in Bypass).

Ability to (a) predict the impacts of the following malfunctions or operations on the RPS; and (b) based on those predictions, use procedures to correct, control, or mitigate the consequences of those malfunctions or operations: Loss of Instrument Power

Question Number: 25

Tier 2 Group 1

Importance Rating: 3.6

Technical Reference:
Proposed references to be provided to applicants during examination: None
Learning Objective:
10 CFR Part 55 Content: 41.10

Comments:

Source :	NEW	Source if Bank:	
Cognitive Level:	HIGHER	Difficulty:	
Job Position:	RO	Plant:	FARLEY
Date:	10/2007	Previous NRC?:	NO

#25 012 A2.02

3.3 INSTRUMENTATION

3.3.1 Reactor Trip System (RTS) Instrumentation

LCO 3.3.1 The RTS instrumentation for each Function in Table 3.3.1-1 shall be OPERABLE.

APPLICABILITY: According to Table 3.3.1-1.

ACTIONS

----------NOTE----------
Separate Condition entry is allowed for each Function.

CONDITION	REQUIRED ACTION	COMPLETION TIME
A. One or more Functions with one or more required channels inoperable.	A.1 Enter the Condition referenced in Table 3.3.1-1 for the channel(s).	Immediately
B. One Manual Reactor Trip channel inoperable.	B.1 Restore channel to OPERABLE status. OR B.2 Be in MODE 3.	48 hours 54 hours

ACTIONS

CONDITION	REQUIRED ACTION		COMPLETION TIME
G. THERMAL POWER > P-6 and < P-10, two Intermediate Range Neutron Flux channels inoperable.	G.1	Suspend operations involving positive reactivity additions.	Immediately
	AND		
	G.2	Reduce THERMAL POWER to < P-6.	2 hours
H. THERMAL POWER < P-6, one or two Intermediate Range Neutron Flux channels inoperable.	H.1	Restore channel(s) to OPERABLE status.	Prior to increasing THERMAL POWER to > P-6
I. One Source Range Neutron Flux channel inoperable.	I.1	Suspend operations involving positive reactivity additions.	Immediately
~~J. Two Source Range Neutron Flux channels inoperable.~~	J.1	~~Open RTBs.~~	~~Immediately~~
K. One Source Range Neutron Flux channel inoperable.	K.1	Restore channel to OPERABLE status.	48 hours
	OR		
	K.2	Open RTBs.	49 hours

Table 3.3.1-1 (page 2 of 8)
Reactor Trip System Instrumentation

	FUNCTION	APPLICABLE MODES OR OTHER SPECIFIED CONDITIONS	REQUIRED CHANNELS	CONDITIONS	SURVEILLANCE REQUIREMENTS	ALLOWABLE VALUE	TRIP SETPOINT
5.	Source Range Neutron Flux	2[d]	2	I,J	SR 3.3.1.1 SR 3.3.1.8 SR 3.3.1.10	≤ 1.3 E5 cps	≤ 1.0 E5 cps
		3[a], 4[a], 5[a]	2	J,K	SR 3.3.1.1 SR 3.3.1.7 SR 3.3.1.10	≤ 1.3 E5 cps	≤ 1.0 E5 cps
		3[e], 4[e], 5[e]	1	L	SR 3.3.1.1 SR 3.3.1.10	N/A	N/A
6.	Overtemperature ΔT	1,2	3	E	SR 3.3.1.1 SR 3.3.1.3 SR 3.3.1.7 SR 3.3.1.9 SR 3.3.1.10 SR 3.3.1.14	Refer to Note 1 (Page 3.3.1-20)	Refer to Note 1 (Page 3.3.1-20)
7.	Overpower ΔT	1,2	3	E	SR 3.3.1.1 SR 3.3.1.7 SR 3.3.1.10 SR 3.3.1.14	Refer to Note 2 (Page 3.3.1-21)	Refer to Note 2 (Page 3.3.1-21)

(a) With RTBs closed and Rod Control System capable of rod withdrawal.

(d) Below the P-6 (Intermediate Range Neutron Flux) interlocks.

(e) With the RTBs open. In this condition, source range Function does not provide reactor trip but does provide indication.

16. 009 EA2.01 005/BANK/WTSI/HIGHER//SRO/FARLEY/10/2007/NO

Given the following:

- A LOCA has occurred.
- Some Safety systems have **NOT** functioned as designed.
- RCPs are tripped.
- All CETC temperatures are 705°F to 715°F.
- Containment Pressure peaked at 7 psig.
- CSFs are being monitored

Which ONE (1) of the following procedures will be entered, and what is the FIRST set of actions that will be taken?

A. FRP-C.1, "Response To Inadequate Core Cooling". Attempt to start an RCP.

B. FRP-C.2, "Response To Degraded Core Cooling". Attempt to start an RCP.

C. FRP-C.1, "Response To Inadequate Core Cooling". Verify or establish SI equipment alignments.

D. FRP-C.2, "Response To Degraded Core Cooling". Verify or establish SI equipment alignments.

A: Incorrect. RCS Temperature < 1200°F; wrong procedure, wrong action.

B: Incorrect. Correct procedure, wrong action.

C: Incorrect. RCS Temperature < 1200°F; wrong procedure, correct action.

D: Correct. RCS Temperature > 700°F and < 1200°F.

A and C credible because they represent a red condition, just more severe than actual condition. B is credible because it contains the correct procedure.

Ability to determine or interpret the following as they apply to a small break LOCA: Actions to be taken, based on RCS temperature and pressure, saturated and superheated

Question Number: 76

Tier 1 Group 1

Importance Rating: SRO 4.8

Technical Reference: FRP-C.1 & C.2, CSF-0.2, ,
Proposed references to be provided to applicants during examination: None
Learning Objective:
10 CFR Part 55 Content: 43.5

Comments:

Source :	BANK	Source if Bank:	WTSI
Cognitive Level:	HIGHER	Difficulty:	
Job Position:	SRO	Plant:	FARLEY
Date:	10/2007	Previous NRC?:	NO

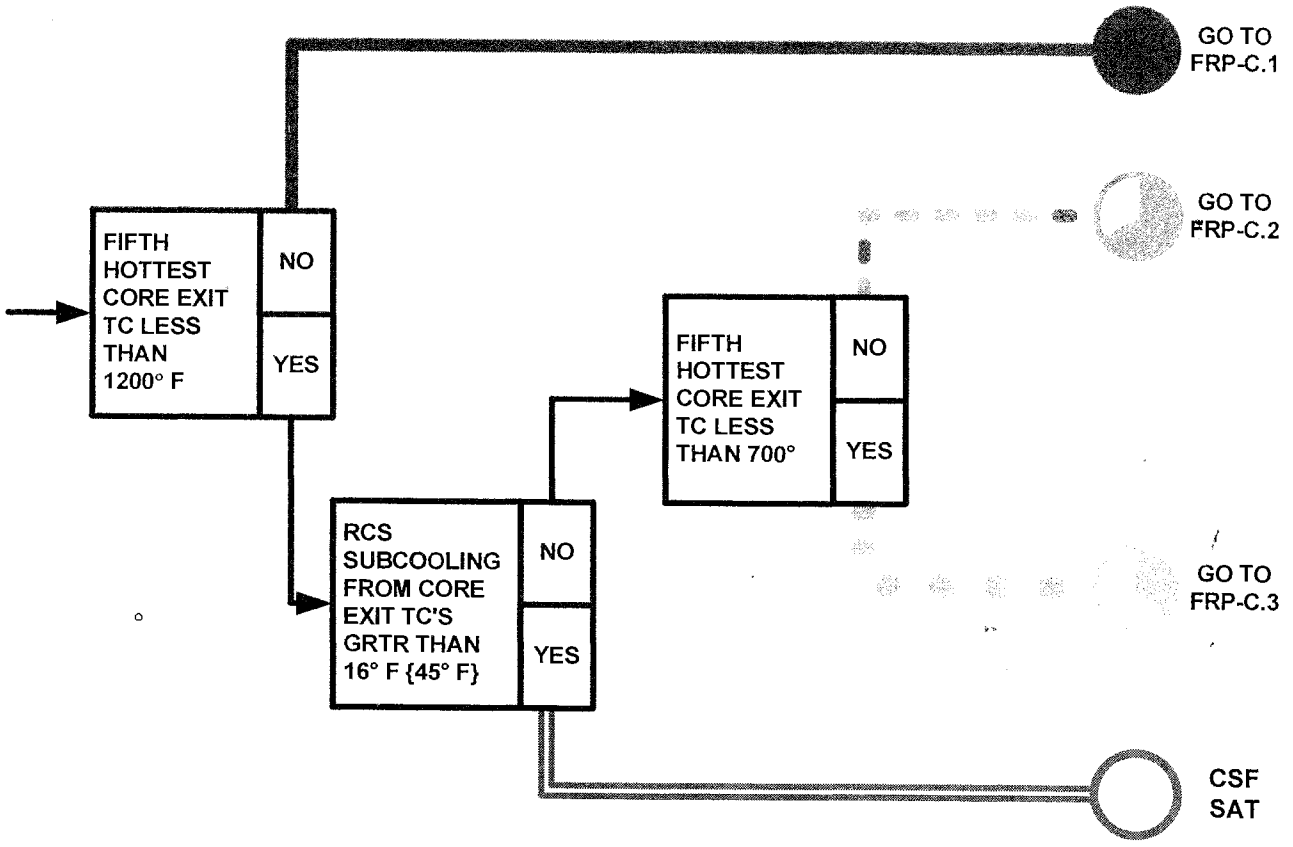
FIFTH HOTTEST CORE EXIT TC LESS THAN 1200° F
NO
YES
GO TO FRP-C.1
RCS SUBCOOLING FROM CORE EXIT TC'S GRTR THAN 16° F {45° F}
NO
YES
FIFTH HOTTEST CORE EXIT TC LESS THAN 700°
NO
YES
GO TO FRP-C.2
GO TO FRP-C.3
CSF SAT

Step	Action/Expected Response	Response NOT Obtained

****

CAUTION: Further degradation of core cooling can occur if any running RCP is stopped before being directed by this procedure even if normal support conditions are lost.

****

1 **Monitor RWST level.**

RWST
LVL
[] LI 4075A
[] LI 4075B

1.1 [CA] WHEN RWST level less than 12.5 ft,
THEN go to FNP-1-ESP-1.3, TRANSFER TO COLD LEG RECIRCULATION.

2 **Verify proper SI valve alignment using ATTACHMENT 2, SI VALVE ALIGNMENT FOR COLD LEG INJECTION.**

____Page Completed

A. Purpose

This procedure provides actions to restore core cooling.

B. Symptoms or Entry Conditions

I. This procedure is entered when core exit temperatures reach 1200°F; from the following:

a. Core Cooling Critical Safety Function Status Tree, on a Red condition.

18. 011 A2.12 001/NEW//HIGHER//SRO/FARLEY/11/2007/NO

Given the following:

- A plant cooldown is in progress per ESP-0.2, NATURAL CIRCULATION COOLDOWN TO PREVENT REACTOR VESSEL HEAD STEAM VOIDING
- Charging and Letdown are established.
- RCPs are secured and unavailable
- PRZR pressure is 2235 psig and stable.
- PRZR level is 21% in auto.
- RCS PRZR AUX SPRAY valve HV8145 is open

Which ONE (1) of the following describes how PRZR level will be raised, pressure will be lowered, MAX limits, and basis?

A. ✓ FCV-122 and RCS ALT CHG LINE open while ensuring a PRZR outsurge, throttle normal spray valves closed; maintain less than 320°F difference between charging and pressurizer steam space to minimize fatigue stresses

B. Close RCS NORMAL & ALT CHG LINE valves. Open RCS PRZR AUX SPRAY to raise pressurizer level and lower pressure while ensuring a pressurizer insurge; maintain less than 320°F difference between RCS Loops and pressurizer liquid temperature to minimize brittle fracture

C. Close RCS NORMAL & ALT CHG LINE valves. Open RCS PRZR AUX SPRAY to raise pressurizer level and lower pressure while ensuring a pressurizer insurge; maintain less than 320°F difference between charging and pressurizer steam space to minimize fatigue stresses

D. FCV-122 and RCS ALT CHG LINE open while ensuring a PRZR outsurge, throttle normal spray valves closed; maintain less than 320°F difference between RCS Loops and pressurizer liquid temperature to minimize brittle fracture

A correct; outsurge is required; correct parameters used to determine differential temperature.

B incorrect; because the actions are incorrect.

C incorrect; outsurge is required, not insurge.

D incorrect; brittle fracture is not a concern on the pressurizer; the 320 degree difference is a fatigue concern and wrong parameters used to determine differential temperature.

Options are plausible because large temperature differences can cause metal failure, and there is more than 1 way to physically change PRZR level.

Ability to (a) predict the impacts of the following malfunctions or operations on the PZR LCS; and (b) based on those predictions, use procedures to correct, control, or mitigate the consequences of Operation of auxiliary spray

Question Number: 91

Tier 2 Group 2

Importance Rating: 3.3

Technical Reference: UOP-2.2, TRM B 13.4, TS B 3.4.3, STP-35.0
Proposed references to be provided to applicants during examination: None
Learning Objective:
10 CFR Part 55 Content: 43.5

Comments:

Source :	NEW	Source if Bank:	
Cognitive Level:	HIGHER	Difficulty:	
Job Position:	SRO	Plant:	FARLEY
Date:	11/2007	Previous NRC?:	NO

TR 13.4.1 Chemistry

The limitations on Reactor Coolant System chemistry ensure that corrosion of the Reactor Coolant System is minimized and reduces the potential for Reactor Coolant System leakage or failure due to stress corrosion. Maintaining the chemistry within the Steady State Limits provides adequate corrosion protection to ensure the structural integrity of the Reactor Coolant System over the life of the plant.

The associated effects of exceeding the oxygen, chloride, and fluoride limits are time and temperature dependent. Corrosion studies show that operation may be continued with contaminant concentration levels in excess of the Steady State Limits, up to the Transient Limits, for the specified limited time intervals without having a significant effect on the structural integrity of the Reactor Coolant System. The time interval permitting continued operation within the restrictions of the Transient Limits provides time for taking corrective actions to restore the contaminant concentrations to within the Steady State Limits.

The Technical Requirement Surveillances provide adequate assurance that concentrations in excess of the limits will be detected in sufficient time to take corrective action.

TR 13.4.2 Pressurizer

The pressurizer heatup and cooldown rates shall not exceed 100°F/hr and 200°F/hr respectively. The spray shall not be used if the temperature difference between the pressurizer and the spray fluid is greater than 320°F.

System preservice hydrotests and in-service leak and hydrotests shall be performed at pressures in accordance with the requirements of ASME Boiler and Pressure Vessel Code, Section XI.

Allowable pressure-temperature relationships for various heatup and cooldown rates are calculated using methods derived from Appendix G in Section XI of the ASME Boiler and Pressure Vessel Code as required by Appendix G to 10 CFR Part 50 and these methods are discussed in detail in WCAP-14040-NP-A, Revision 2, and the NRC letters dated March 31, 1998 and April 3, 1998.

Although the pressurizer operates in temperature ranges above those for which there is reason for concern of non-ductile failure, operating limits are provided to assure compatibility of operation with the fatigue analysis performed in accordance with the ASME Code requirements.

The 72 hour limit for performance of engineering evaluation was established based on engineering judgment, to allow an adequate time for performance while ensuring promptness.

FARLEY NUCLEAR PLANT
SURVEILLANCE TEST REVIEW SHEET

SURVEILLANCE TEST NO.	TECHNICAL SPECIFICATION REFERENCE
FNP-1-STP-35.0	**SR 3.4.3.1, TRS 13.4.2.1**
TITLE **REACTOR COOLANT SYSTEM PRESSURE AND TEMPERATURE/PRESSURIZER TEMPERATURE LIMITS VERIFICATION**	MODE(S) REQUIRING TEST: **AT ALL TIMES**

TEST RESULTS (TO BE COMPLETED BY TEST PERFORMER)

PERFORMED BY _____ DATE/TIME _____

COMPONENT OR TRAIN TESTED (if applicable) _____

[ ] ENTIRE STP PERFORMED [ ] FOR SURVEILLANCE CREDIT

[ ] PARTIAL STP PERFORMED: [ ] NOT FOR SURVEILLANCE CREDIT

REASON FOR PARTIAL: _____

TEST COMPLETED: [ ] Satisfactory [ ] Unsatisfactory

[ ] The following deficiencies occurred:

_____

_____

[ ] Corrective action taken or initiated:

_____

_____

_____

SHIFT SUPERVISOR / SHIFT SUPPORT SUPERVISOR REVIEW

REVIEWED BY _____ DATE _____

[ ] Procedure properly completed and satisfactory

[ ] Comments: _____

_____

ENGINEERING SUPPORT GROUP SCREENING (IF APPLICABLE)

SCREENED BY _____ DATE _____

REVIEWED BY _____ DATE _____

[ ] Satisfactory and Approved

[ ] Comments: _____

_____

FARLEY NUCLEAR PLANT
UNIT 1
SURVEILLANCE TEST PROCEDURE STP-35.0

REACTOR COOLANT SYSTEM PRESSURE AND TEMPERATURE/PRESSURIZER TEMPERATURE LIMITS VERIFICATION

1.0 Purpose

To ensure the reactor coolant system pressure and temperature limits and pressurizer temperature limits are not exceeded during heatup, cooldown and hydrostatic/inservice leak rate testing.

2.0 Acceptance Criteria

2.1 The reactor coolant system temperature and pressure shall be determined to be within the "Acceptable Operation" portion of the appropriate figure during system heatup, cooldown, inservice leak and hydrostatic testing operations.

2.2 The reactor coolant system temperature change shall not exceed 100°F in any one hour during heatup and cooldown.

2.3 The pressurizer temperature change shall not exceed 100°F in any one hour during heatup and 200°F in any one hour during cooldown.

2.4 The maximum spray water differential shall not exceed 320°F.

3.0 Initial Conditions

None

4.0 Precautions

None

3.3 Cooldown:

3.3.1 Following a shutdown for refueling, a walkdown shall be done prior to any RCS cooldown, to identify boric acid deposits that could be indicative of RCS leakage. This shall include a visual inspection of the reactor vessel head. **{CMT 0007289},{CMT 10626}**

3.3.2 Do not exceed the RCS cooldown rate specified in the PTLR section 2.0, Operating Limits. The maximum cooldown rate is 100°F in any one hour period.

3.3.3 Do not exceed a 200°F/hr pressurizer cooldown rate.

3.3.4 The temperature differential between the pressurizer and the RCS must not exceed 320°F. The pressurizer liquid, surge line and loop B hot leg temperatures should be monitored to ensure that a pressurizer outsurge is taking place whenever the pressurizer is being cooled or filled. This will prevent thermal stratification from taking place. A pressurizer outsurge is indicated by surge line temperature approximately equal to pressurizer liquid temperature and greater than "B" Hot Leg temperature.

3.3.5 All steam generators should be connected to the steam header during cooldown to assure uniform cooldown of the reactor coolant loops. The temperature difference between loops should not exceed 25°F.

3.3.6 With the RCS temperature greater than 350°F, one CRDM cooling fan must be in service, except as permitted by ALA-95-502.

3.3.7 When cooling down with MSIV closed, the Atmospheric Relief valves must be controlled to prevent an SI on SG ΔP. If the pressure in one SG decreases to 100 psig lower than the other two SGs a SI will occur.

3.3.8 During plant cooldown the Shift Supervisor will verify that all requirements are met prior to changing modes.

3.3.9 A maximum of one charging pump shall be OPERABLE when the temperature of one or more RCS cold legs is ≤ 180°F. Except as permitted by Technical Specification 3.4.12 and Technical Requirement 13.1.4.

3.4 Reactor Coolant Pumps:

3.4.1 With the reactor coolant pumps running the RCS pressure must be maintained within limits of Figure 1 to assure reactor coolant pump NPSH requirements.

3.4.2 The reactor coolant pumps must not be operated when the number 1 seal differential pressure is less than 200 psid or the VCT pressure less than 18 psig.

3.6.7 Use EOOS for plant safety assessment while in Mode 3. Use FNP-0-UOP-4.0, GENERAL OUTAGE GUIDANCE, for Shutdown Safety Assessment when in Modes 4, 5, 6, and defueled.

3.6.8 Operation of SG atmospheric relief valve or TDAFW pump with known primary to secondary leakage requires implementation of FNP-0-CCP-645, MAIN STEAM ABNORMAL ENVIRONMENTAL RELEASE. Chemistry should be contacted in advance to allow them to generate a release permit if required and to calculate projected dose rates.

4.0 Technical Specifications Data Requirements

4.1 The RCS temperature, pressure and pressurizer temperature shall be determined to be within limits by performing FNP-1-STP-35.0, REACTOR COOLANT SYSTEM PRESSURE AND TEMPERATURE/PRESSURIZER TEMPERATURE LIMITS VERIFICATION.

4.2 The flow rate through the RCS shall be determined to be greater than 3000 gpm prior to the start and at least once per hour during a reduction in RCS boron concentration by recording the required data per FNP-1-STP-1.0, OPERATIONS DAILY AND SHIFT SURVEILLANCE REQUIREMENTS, miscellaneous section.

4.3 IF primary OR secondary coolant temperature is ≤ 70°F, THEN verify that pressure in each side of the steam generators is <200 psig by performing FNP-1-STP-48.0, STEAM GENERATOR PRESSURE/TEMPERATURE VERIFICATION.

4.4 WHEN the temperature of one OR more of the RCS cold legs is ≤ 325°F, except when the reactor vessel head is removed, THEN ensure compliance with Tech. Spec. 3.4.12, Low Temperature Overpressure Protection (LTOP) System.

4.5 At least two Reactor Coolant Loops shall be operable and in operation with Steam Generator levels greater than or equal to 30% narrow range indication with the Rod Control System operational. IF the Rod Control System is inoperable as provided in Tech. Spec. 3.4.5, THEN only one Reactor Coolant Pump is required to be in operation.

5.0 Instructions

5.1 IF the RCS is to be opened for maintenance OR refueling AND required by Chemistry (Chemical degas not planned), THEN perform the following:

____ / *5.1.1 Commence venting the non-condensable gases from the pressurizer gas space by aligning the sample system path from the pressurizer gas space to the letdown line per FNP-1-SOP-2.5, RCS CHEMICAL ADDITION, VCT GAS CONTROL AND DEMINERALIZER OPERATION, section 4.5. Continue venting until RCS hydrogen concentration is < 5 cc/kg. **{CMT 0004609}**

____ / 5.1.2 Increase the purification flow rate to the maximum attainable rate not to exceed approximately 130 gpm.

CAUTION: Technical Specification 3.4.9 requires pressurizer level ≤ 63.5% until Mode 4 entry.

CAUTION: The temperature differential between the pressurizer and the RCS must not exceed 320°F. The pressurizer liquid, surge line and loop B hot leg temperatures should be monitored to ensure that a pressurizer outsurge is taking place whenever the pressurizer is being cooled or filled. A pressurizer outsurge is indicated by surge line temperature approximately equal to pressurizer liquid temperature and greater than 'B' hot leg temperature. This will prevent thermal stratification from taking place.

____ / *5.2 Begin raising pressurizer level to approximately 55%.

NOTE: Utilizing pressurizer heaters to achieve maximum spray flow while filling the pressurizer will assist in ensuring a continuous pressurizer out surge and will ensure uniform temperature in the pressurizer and uniform boron concentration between the pressurizer and the RCS.

5.2.1 Maximize spray flow by energizing all available pressurizer heaters.

- 1A PRZR HTR GROUP BACKUP--ON
- 1B PRZR HTR GROUP BACKUP--ON
- 1C PRZR HTR GROUP VARIABLE--ON
- 1D PRZR HTR GROUP BACKUP--ON
- 1E PRZR HTR GROUP BACKUP--ON

5.2.2 Place CHG FLOW FK 122 in MANUAL and adjust charging flow to gradually raise pressurizer level.

5.2.3 Monitor pressurizer surge line temperature during the pressurizer level rise to ensure that a pressurizer out surge is occurring. IF surge line temperature falls toward hot leg temperature, THEN reduce the rate of level rise in the pressurizer to re-establish an out surge.

5.2.4 IF needed to maintain VCT level during RCS boration and/or cooldown, THEN the following valves may be operated, provided the effect on RCS boron and RCS silica has been evaluated.

- Q1E21MOV8104, EMERG BORATE TO CHG PUMP SUCT
- Q1E21LCV115B & D RWST TO CHG PUMP

5.2.5 WHEN level is approximately 55%, THEN adjust CHG FLOW FK 122 to maintain this level.

NOTE: Step 5.3 may be performed during step 5.4, but must be completed prior to commencing any RCS cooldown.

____ 5.3 IF this shutdown is for refueling, THEN perform the following:
__/__ **{CMT 0007289}**

____ 5.3.1 Inspect the RCS for boron deposits indicative of RCS leakage.
__/__

____ 5.3.2 Perform an inspection of the Reactor Vessel Head for boron deposits indicative of RCS leakage. **{CMT 10567} {AI2002201122}**
__/__ **{CMT-10626} {AI2005205258}**
MAINT

NOTE: Step 5.6 may be performed concurrently with step 5.4, but must be completed prior to commencing any RCS cooldown.

5.4 Borate the RCS as follows:

____ 5.4.1 Maintain 1A or 1B RCP in operation throughout the boration to reach cold shutdown boron concentration. This will promote sufficient mixing to ensure the minimum boron concentration exists throughout the RCS and the pressurizer. (Inadvertent dilution event SOER 94-2)
__/__

____ 5.4.2 Determine the boron concentration required for proper shutdown margin using Curve 61 and 61a in the Reactor Physics Curve Book. Borating to the concentration specified by Curve 61a is only required in Mode 4 or 5 while on RHR
__/__

NOTE: Prior to manually blocking any automatic SI signal, the RCS must be borated to the cold shutdown boron concentration. {AIT 2003204688 – NSAL-02-14}

____ 5.4.3 Borate the RCS to the concentration determined in step 5.4.2 using FNP-1-SOP-2.3, CHEMICAL AND VOLUME CONTROL SYSTEM REACTOR MAKEUP CONTROL SYSTEM.
__/__

____ 5.4.3.1 IF refueling is required, THEN borate the RCS to > 2000 ppm boron prior to cool down to less than 400°F.
__/__

Step	Action/Expected Response	Response NOT Obtained
8	**Maintain the following RCS conditions.** • Maintain RCS pressure - approximately 1950 psig. 1C(1A) LOOP RCS WR PRESS [] PI 402A [] PI 403A • Maintain pressurizer level - approximately 22%. • Maintain RCS cold leg cooldown rate - LESS THAN 25°F/hr. RCS COLD LEG TEMP [] TR 410 • <u>IF</u> both CRDM FANs started, <u>THEN</u> maintain RCS cold leg temperature and pressure within limits of FIGURE 3. RCS COLD LEG TEMP [] TR 410 1C(1A) LOOP RCS WR PRESS [] PI 402A [] PI 403A	• Maintain RCS cold leg temperature and pressure within limits of FIGURE 4. RCS COLD LEG TEMP [] TR 410 1C(1A) LOOP RCS WR PRESS [] PI 402A [] PI 403A
9	**[CA] Monitor RCS cooldown.** • Check core exit T/C indication - FALLING. • Check RCS hot leg temperatures - FALLING. RCS HOT LEG TEMP [] TR 413 • Check SUB COOLED MARGIN MONITOR indication - SUBCOOLING IN CETC MODE RISING.	

____Page Completed

Step	Action/Expected Response	Response NOT Obtained
11.2.4	WHEN RCS pressure reduction required, THEN operate the following valves as required to control pressurizer pressure. CHG FLOW [] FK 122 manually open 1A(1B) LOOP SPRAY VLV [] PK 444C manually open/closed [] PK 444D manually open/closed RCS PRZR AUX SPRAY [] Q1E21HV8145 open/closed RCS NORMAL CHG LINE [] Q1E21HV8146 open/closed RCS ALT CHG LINE [] Q1E21HV8147 open/closed	

____Page Completed

21. 012 A4.01 004/BANK/FARLEY/LOWER//RO/FARLEY/11/2007/NO

Given the following:

- Unit 1 is operating at 100% power when a PRZR PORV spuriously opens.
- The control room operators attempt to close the PORV but are unsuccessful.
- The UO closes the block valve for the open PORV
- The following conditions exist:
  - Tavg is 575°F
  - PRZR level is 63%
  - PRZR pressure is 1845 psig & rising slowly
  - Reactor power is 98%

Which ONE of the following actions is required?

A. Restore RCS pressure to >2209 psig within 2 hours.

B. Commence plant shutdown and be in hot standby within 6 hours.

C. Manually trip the reactor, initiate SI, and enter EEP-0, Reactor Trip or Safety Injection.

D. Maintain block valve closed. Maintain power to block valve, and report PORV cycling per SOP-0.0, General Instructions For Operations Personnel.

A. Incorrect - This would not meet management expectations to trip the reactor first and verify it is tripped prior to actuating SI. This expectation ensures reactor is tripped prior to tripping SGFPs and isolating main feed to SGs. This prevents a worst case ATWT, Loss of Main Feed with no reactor trip or turbine trip.

B. Incorrect - This could be an action due to rising PRZR level.

C. Correct - this action is necessary since PRZR pressure is below the reactor trip and SI setpoint.

D. Incorrect - This is the TS action if the plant would remain at power.
Ability to manually operate and/or monitor in the control room: Manual trip button

Question Number: 11

Tier 2 Group 1

Importance Rating: 4.5

Technical Reference: AOP-100; TS 3.4.11
Proposed references to be provided to applicants during examination: None
Learning Objective:
10 CFR Part 55 Content: 41.10

Comments:

Source :	BANK	Source if Bank:	FARLEY
Cognitive Level:	LOWER	Difficulty:	
Job Position:	RO	Plant:	FARLEY
Date:	11/2007	Previous NRC?:	NO

3.4 REACTOR COOLANT SYSTEM (RCS)

3.4.11 Pressurizer Power Operated Relief Valves (PORVs)

LCO 3.4.11 Each PORV and associated block valve shall be OPERABLE.

APPLICABILITY: MODES 1, 2, and 3.

ACTIONS

----------NOTE----------
Separate Condition entry is allowed for each PORV.

CONDITION	REQUIRED ACTION	COMPLETION TIME
A. One or more PORVs inoperable and capable of being manually cycled.	A.1 Close and maintain power to associated block valve.	1 hour
B. One PORV inoperable and not capable of being manually cycled.	B.1 Close associated block valve.	1 hour
	AND	
	B.2 Remove power from associated block valve.	1 hour
	AND	
	B.3 Restore PORV to OPERABLE status.	72 hours

ACTIONS

CONDITION	REQUIRED ACTION		COMPLETION TIME
C. One block valve inoperable.	C.1	Place associated PORV in manual control.	1 hour
	AND		
	C.2	Restore block valve to OPERABLE status.	72 hours
D. Required Action and associated Completion Time of Condition A, B, or C not met.	D.1	Be in MODE 3.	6 hours
	AND		
	D.2	Be in MODE 4.	12 hours
E. Two PORVs inoperable and not capable of being manually cycled.	E.1	Close associated block valves.	1 hour
	AND		
	E.2	Remove power from associated block valves.	1 hour
	AND		
	E.3	Be in MODE 3.	6 hours
	AND		
	E.4	Be in MODE 4.	12 hours

ACTIONS

CONDITION	REQUIRED ACTION		COMPLETION TIME
F. More than one block valve inoperable.	F.1	Place associated PORVs in manual control.	1 hour
	AND		
	F.2	Restore one block valve to OPERABLE status.	2 hours
	AND		
	F.3	Restore remaining block valve to OPERABLE status.	72 hours
G. Required Action and associated Completion Time of Condition F not met.	G.1	Be in MODE 3.	6 hours
	AND		
	G.2	Be in MODE 4.	12 hours

SURVEILLANCE REQUIREMENTS

SURVEILLANCE		FREQUENCY
SR 3.4.11.1	----------NOTES---------- 1. Not required to be met with block valve closed in accordance with the Required Action of Condition B or E. 2. Not required to be performed prior to entry into MODE 3. 3. Not required to be performed for Unit 2 for the remainder of operating cycle 16 for block valve Q2B31MOV8000B. ---------- Perform a complete cycle of each block valve.	92 days

SURVEILLANCE REQUIREMENTS

SURVEILLANCE		FREQUENCY
SR 3.4.11.2	----------NOTE---------- Not required to be performed prior to entry into MODE 3. ---------- Perform a complete cycle of each PORV during MODE 3 or 4.	18 months
SR 3.4.11.3	Perform a complete cycle of each PORV using the backup PORV control system.	18 months
SR 3.4.11.4	----------NOTE---------- Required to be performed only for Unit 2 for the remainder of operating cycle 16. ---------- Check power available to the Unit Two PORV block valve Q2B31MOV8000B.	24 hours

22. 013 A4.02 002/BANK//HIGHER//RO/FARLEY/10/2007/NO

Given the following:

- A LOCA has occurred.
- RCS pressure is 500 psig and stable.
- Containment pressure is 28 psig and lowering slowly.
- All equipment is operating as designed.
- The crew is performing actions contained in ESP-1.2, POST LOCA COOLDOWN AND DEPRESSURIZATION, preparing to reset ESF Actuation signals.

Which ONE of the following describes the conditions required to be met, if any, to reset Containment Isolation Phase A and B?

A. Phase A and Phase B may be reset manually without additional conditions.

B. Phase A may be reset manually at this time. Containment Spray must be reset prior to resetting Phase B.

C. Phase B will NOT reset until Phase A is reset. Phase A may be reset at this time.

D. Phase A will NOT reset until Safety Injection is reset. Phase B will NOT reset until containment pressure is below the actuation setpoint.

A is correct. Manual resets for Phase A and Phase B may be performed even with actuating signal present.

B is incorrect. Credible because CTMT spray and Phase B have the same actuating signal.

C is incorrect. Credible because procedure directs Phase B reset after Phase A.

D is incorrect. Credible because SI is the initiation signal for Phase A.

Question Number: 13

Tier 2 Group 1

Importance Rating: 4.3

Technical Reference: EEP-1.0, Reactor ProtectioN System FSD, A181007, Figure F-2 sheet 8 & Table T-4
Proposed references to be provided to applicants during examination: None
Learning Objective:
10 CFR Part 55 Content: 41.5

Comments:

Source :	BANK	Source if Bank:	
Cognitive Level:	HIGHER	Difficulty:	
Job Position:	RO	Plant:	FARLEY
Date:	10/2007	Previous NRC?:	NO

A 181 007

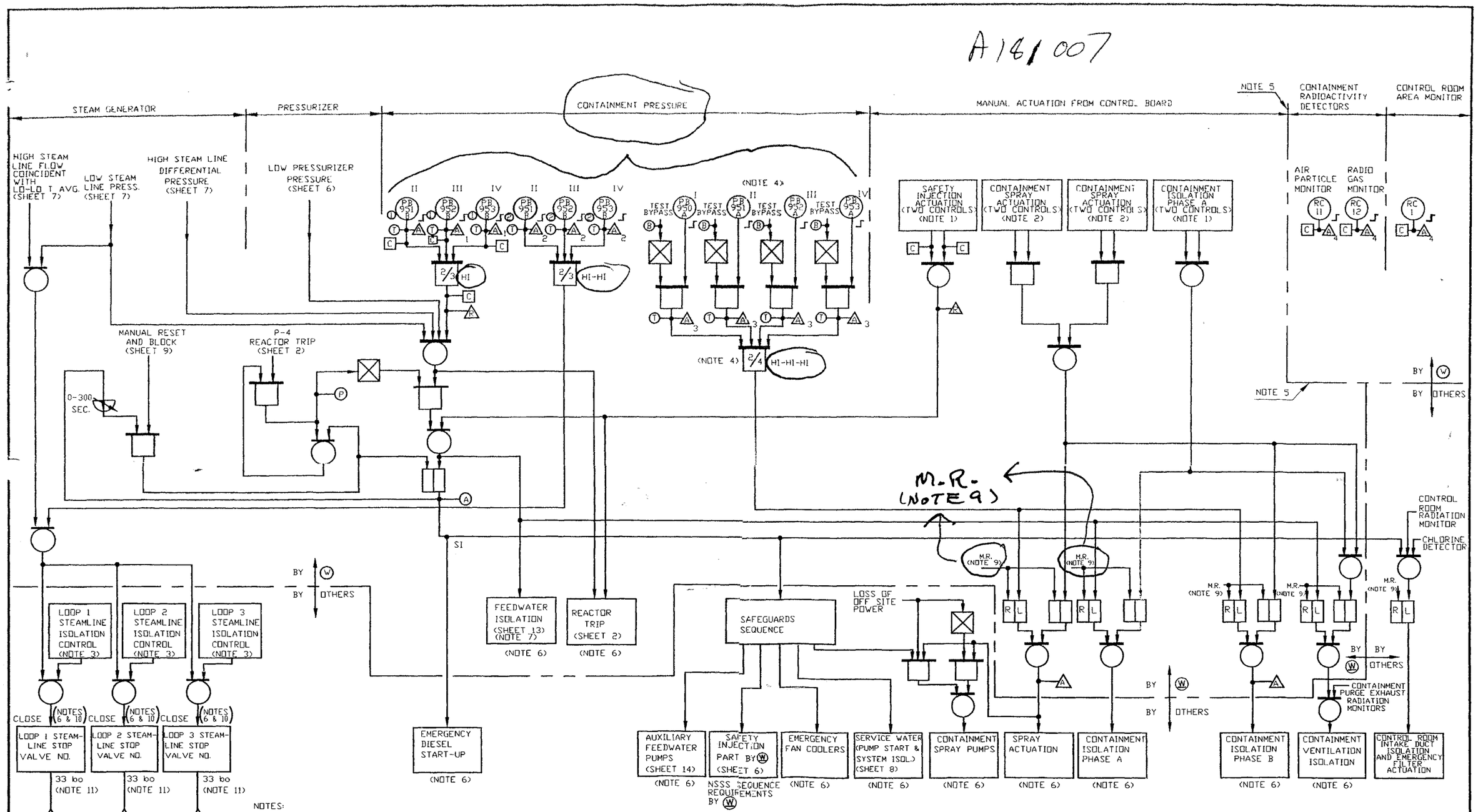

NOTES:

1. TWO MOMENTARY CONTROLS: OPERATING EITHER CONTROL WILL ACTUATE.
2. THE MANUAL SPRAY ACTUATION CONSISTS OF FOUR MOMENTARY CONTROLS. ACTUATION WILL OCCUR ONLY IF TWO ASSOCIATED CONTROLS ARE OPERATED SIMULTANEOUSLY.
3. ONE MOMENTARY CONTROL PER LOOP ON THE CONTROL BOARD.
4. CONTAINMENT PRESSURE BISTABLES FOR SPRAY ACTUATION ARE ENERGIZE TO ACTUATE (OTHER BISTABLES ARE DE-ENERGIZE-TO-ACTUATE).
5. ENCLOSED CIRCUITRY IS NOT PART OF THE SAFEGUARDS SYSTEM AND IS NOT REDUNDANT.
6. COMPONENTS ARE ALL INDIVIDUALLY SEALED IN (LATCHED), SO THAT LOSS OF THE ACTUATION SIGNAL WILL NOT CAUSE THESE COMPONENTS TO RETURN TO THE CONDITION HELD PRIOR TO THE ADVENT OF THE ACTUATION SIGNAL.
7. FEEDWATER ISOLATION INCLUDES THE TRIPPING OF ALL MAIN FEEDWATER PUMPS.
8. SERVICE WATER SYSTEM ISOLATION IS USED ONLY IF REQUIRED.
9. THE REDUNDANT MANUAL RESET CONSISTS OF TWO MOMENTARY CONTROLS ON THE CONTROL BOARD, ONE FOR EACH TRAIN.
10. ALSO CLOSES THE BYPASS VALVE IN PARALLEL WITH THE ASSOCIATED STEAM LINE STOP VALVE.
11. LIGHTS SHOULD BE PROVIDED IN THE CONTROL ROOM FOR EACH STEAM LINE STOP VALVE TO INDICATE WHEN THE VALVE IS FULLY CLOSED OR FULLY OPEN.

SAFEGUARDS ACTUATION SIGNALS

FIGURE F-2 SHEET 8

A181007 Fig. F-2 Sheet 1

LOGIC SYMBOLS

SYMBOL	LOGIC FUNCTION	
	AND	A DEVICE WHICH PRODUCES AN OUTPUT ONLY WHEN EVERY INPUT EXISTS.
	NOT	A DEVICE WHICH PRODUCES AN OUTPUT ONLY WHEN THE INPUT DOES NOT EXIST
	OR	A DEVICE WHICH PRODUCES AN OUTPUT WHEN ONE INPUT (OR MORE) EXISTS.
	OFF RETURN MEMORY	A DEVICE WHICH RETAINS THE CONDITION OF OUTPUT CORRESPONDING TO THE LAST ENERGIZED INPUT, EXCEPT UPON INTERRUPTION OF POWER IT RETURNS TO THE OFF CONDITION.
	RETENTIVE MEMORY	A DEVICE WHICH RETAINS THE CONDITION OF OUTPUT CORRESPONDING TO THE LAST ENERGIZED INPUT (ALSO UPON INTERRUPTION OF POWER).
	ADJUSTABLE TIME DELAY ENERGIZING	A DEVICE WHICH PRODUCES AN OUTPUT FOLLOWING DEFINITE INTENTIONAL TIME DELAY AFTER RECEIVING AN INPUT.
	ADJUSTABLE TIME DELAY DE-ENERGIZING	A DEVICE WHICH CONTINUES TO PRODUCE AN OUTPUT FOR A DEFINITE INTENTIONAL PERIOD OF TIME AFTER THE INPUT HAS BEEN REMOVED
2/3	COINCIDENCE (2 OUT OF 3 SHOWN)	A DEVICE WHICH PRODUCES AN OUTPUT WHEN THE PRESCRIBED NUMBER OF INPUTS EXIST (EXAMPLE 2 INPUTS MUST EXIST FOR AN OUTPUT).
M.R. L R	RETENTIVE MEMORY WITH MANUAL RESET	A DEVICE HAVING THE LOGICAL FUNCTION AS INDICATED BY THE DIAGRAM BELOW.

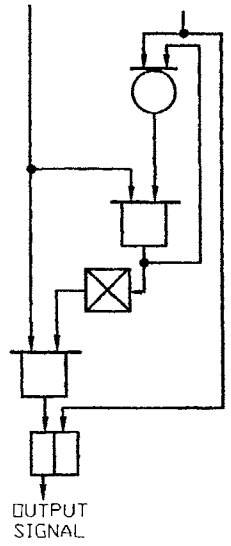

ADDITIONAL SYMBOLS

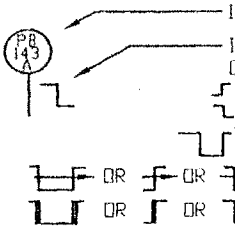

- INSTRUMENT CHANNEL BISTABLE
- INDICATES THAT THE DEVICE OF OUTPUT WHEN:
  - THE PARAMETER MEASURED IS (
  - THE PARAMETER MEASURED IS L
  - THE PARAMETER MEASURED DEV PRESET AMOUNT.
  - SAME AS ABOVE EXCEPT WI
  - SAME AS ABOVE EXCEPT WI AND TURN OFF.

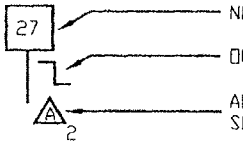

- NON-INSTRUMENT BISTABLE
- OUTPUT INDICATOR SAME AS EXI
- ALARM ANNUNCIATOR (ALARMS ON SHARE A COMMON ANNUNCIATOR
- REACTOR TRIP 'FIRST OUT' ANN
- TURBINE TRIP 'FIRST OUT' ANNU
- INDICATOR LAMP
  - A ACTUATION STATUS LIGHTS
  - T TRIP STATUS LIGHTS
  - P PERMISSIVE STATUS LIGHTS
  - B BYPASS STATUS LIGHTS
- C — COMPUTER INPUT
- LOGIC INFORMATION TRANSMISSI
- ANALOG INFORMATION TRANSMISS
- I — ANALOG DISPLAY
  - I ANALOG INDICATOR
  - R RECORDER
  - R2 RECORDER 2 PEN
  - R3 RECORDER 3 PEN
  - R8 RECORDER 8 POINT
- Σ — ANALOG SUMMER

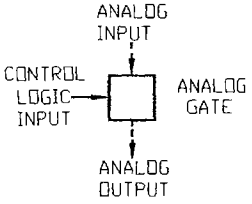

A DEVICE WHICH PERMITS AN TO PASS IN AN ISOLATED CIRC CONTROL LOGIC INPUT EXISTS.

NOTES:

1. IN ALL LOGIC CIRCUITS, THE INDICATED ACTUATION OF A SYSTEM OR DEVICE OCCURS WHEN A LOGIC 1 SIGNAL IS PRESENT. EXCEPT WHERE INDICATED OTHERWISE, ALL BISTABLES ARE 'DE-ENERGIZED TO ACTUATE' SUCH THAT A LOGIC 1 SIGNAL IS DEFINED TO BE PRESENT WHEN THE BISTABLE OUTPUT VOLTAGE IS OFF.
2. EXCEPT WHERE INDICATED OTHERWISE, THE FOLLOWING IS TRUE. ALL LOGIC CIRCUITS ARE REDUNDANT. ALL INSTRUMENT CHANNELS, BISTABLES, ANNUNCIATORS, COMPUTER INPUTS, AND INDICATOR LAMPS ARE NOT REDUNDANT. MANUAL CONTROLS DO NOT HAVE REDUNDANT ACTUATORS, BUT DO HAVE REDUNDANT CONTACTS WHERE LOGIC IS REDUNDANT. ALL INDICATOR LAMPS, ANNUNCIATORS, AND COMPUTER INPUTS ARE CONNECTED TO BOTH TRAINS (WHERE LOGIC IS REDUNDANT) SO THAT A SIGNAL IN EITHER TRAIN WILL ACTUATE.
3. THIS SET OF DRAWINGS IS IDENTICAL FOR UNITS 1 & 2 EXCEPT FOR THE TAG NUMBERS. FOR UNIT 1 TAG NUMBERS ADD A '1' EXAMPLE: 1PC-455E. FOR UNIT 2 TAG NUMBERS ADD A '2' EXAMPLE: 2PC-455E.
4. WHENEVER A PROCESS SIGNAL IS USED FOR CONTROL AND IS DERIVED FROM A PROTECTION CHANNEL, ISOLATION MUST BE PROVIDED.
5. THIS S
   REACTO
   THESE
   HARDW
   FUNCTI
   REACTI (SHEET
   REACTI (SHEET
6. FOR DI
   2 SETP
   ON THE
   EXAM

TABLE T-4 - ENGINEERED SAFEGUARDS ACTUATION SIGNALS

CONTAINMENT PHASE B ISOLATION

CONTAINMENT SPRAY	SETPOINT	COINCIDENCE	INTERLOCKS & BLOCKS	PROTECTION PROVIDED FOR	MODES OF OPERATION	FSD SECTION
High-3 containment pressure PB950A PB951A PB952A PB953A	27 psig	2/4 High-3 containment pressure signals ≥ setpoint	None	Protects containment for a loss of coolant or steam line break inside containment Prevents over pressurization of containment structure and subsequent building rupture	1, 2, 3	2.4 2.7.1 2.7.2 Fig. 2 Sht. 8
Manual	N/A	-2/4 Switches -Consist of four momentary switches in two groups	-Phase B isolation is manually reset by depressing both train A and train B reset push buttons on MCB	Operator discretion	1, 2, 3, 4	2.7.1 Fig.2 Sht. 8

TABLE T-4 - ENGINEERED SAFEGUARDS ACTUATION SIGNALS

CONTAINMENT ISOLATION PHASE A

ACTUATION SIGNAL	SETPOINT	COINCIDENCE	INTERLOCKS & BLOCKS	PROTECTION PROVIDED FOR	MODES OF OPERATION	FSD SECTION
Safety injection	N/A	-Automatic or manual initiation -1/2 trains	A safety injection may be manually reset by depressing both train A and train B SI Block Reset push buttons after a 60 second safety injection reset time delay	Prevent escape of radioactivity from containment by isolating nonessential containment penetrations	1, 2, 3, 4	2.4 2.7.1 Fig. 2 Sht. 8
Manual	N/A	-1/2 Switches	-Containment Phase A Isolation is manually reset by depressing both train A and train B reset push buttons	Operator discretion	1, 2, 3, 4	2.7.1 Fig. 2 Sht. 8

23. 013 G2.4.31 008/BANK//HIGHER//RO/FARLEY/10/2007/

Given the following:

- Unit 1 is at 100% power.
- SSPS train "B" surveillance testing is currently in progress with the "B" reactor trip bypass breaker closed and associated annunciator alarms acknowledged.
- The SSPS train "A" Output Relay Mode Selector switch has just been inadvertently placed in TEST.
- EC4, SSPS A TRN TRBL, has alarmed and all remaining annunciators are unchanged.

Which ONE of the following actions is required?

A. Apply Technical Specification 3.0.3 and initiate actions within 1 hour to shut down to Hot Standby.

B. Stop the testing, check the B Reactor trip breaker closed, then open the B Reactor trip bypass breaker

C. Initiate a manual reactor trip; if unsuccessful, enter FRP-S.1, "Response to Nuclear Power Generation/ATWT".

D. Immediately restore SSPS train "A" to normal, no further action required.

A. incorrect. Both trains of Solid State are inoperable, and a common TS which applies when both trains of safety related equipment is inoperable is 3.0.3, but a reactor trip is required for this condition.

B. incorrect. "Backing out" of a test when the other train becomes inoperable is normally done, but opening all reactor trip and bypass breakers and not closing any is required for this condition.

C. correct. Reactor should have tripped with 2 trains in test due to both trains have a general warning in which is the input to the automatic trip coincidence of 2/2 GW alarms in.

D. incorrect. If SSPS train A had not been momentarilly inoperable, no further action would be required. The coincidence for a reactor trip would no longer be met. Quickly restoring the output switch to it's original position would not change the fact that the SSPS should have initiated an automatic trip, and met coincidence for one, but it did not occur. A reactor trip is necessary.

Question Number: 12

Tier 2 Group 1

Importance Rating: 3.3
Technical Reference: ARP EC4
Proposed references to be provided to applicants during examination: None
Learning Objective:
10 CFR Part 55 Content: 41.10

Comments:

Source :	BANK	Source if Bank:	
Cognitive Level:	HIGHER	Difficulty:	
Job Position:	RO	Plant:	FARLEY
Date:	10/2007	Previous NRC?:	

SETPOINT: Not Applicable

C4
SSPS A TRN TRBL

NOTE: The following will cause a General Warning in A Trn SSPS except for item 14.

ORIGIN:

1. +48V Power Supply No. 1	8. Logic "A" Switch (S501)
2. +48V Power Supply No. 2	9. Multiplexer Test Switch (S508)
3. +15V Power Supply No. 1	10. Permissives Switch (S505)
4. +15V Power Supply No. 2	11. Memories Switch (S506)
5. Card Interlock row No. 1, 2, 3, 4, & 5	12. Output Relay Mode Selector Switch (S602)
6. Ground Return Fuse (5FU9)	13. Reactor Trip Bypass Breaker auxiliary contact
7. Input Error Inhibit Switch (S509)	14. Output Relay Power Fuse (6FU1) Monitor Relay K639

PROBABLE CAUSE

1. Solid State Protection Cabinet Train A, 48VDC or 15VDC Power Supply failure.
2. Loose or removed circuit card.
3. Ground fault resulting in Ground Return Fuse (5FU9) failing.
4. One or more of the above switches in any position other than Normal.
5. Train A Reactor Trip Bypass Breaker closed.
6. Output relay power fuse failure.
7. Vital panel supply breaker tripped.

AUTOMATIC ACTION

1. IF both Train A AND B Solid State Protection System Trouble alarms are actuated, THEN a reactor trip will occur.

OPERATOR ACTIONS

1. IF alarm is due to preplanned operational or maintenance activities, THEN no action is necessary, IF NOT, notify appropriate personnel to determine and correct the cause of the alarm.
2. Refer to FNP-1-SOP-40.0, REACTOR CONTROL AND PROTECTION SYSTEM.
3. Return all switches to normal as soon as possible.
4. IF 120V vital AC bus has lost power, THEN refer to the appropriate annunciator window WD1, or WD2, 1A or 1B INV FAULT, for guidance.
5. Refer to Technical Specifications LCOs 3.3.1 and 3.3.2.

References: A-177100, Sh. 244; U-198768, Sect. 2.5.7; Technical Specifications

SETPOINT: Not Applicable

D4
SSPS B TRN TRBL

NOTE: The following will cause a General Warning in B Trn SSPS except for item 14.

ORIGIN:

1. +48V Power Supply No. 1	8. Logic "A" Switch (S501)
2. +48V Power Supply No. 2	9. Multiplexer Test Switch (S508)
3. +15V Power Supply No. 1	10. Permissives Switch (S505)
4. +15V Power Supply No. 2	11. Memories Switch (S506)
5. Card Interlock row No. 1, 2, 3, 4, & 5	12. Output Relay Mode Selector Switch (S602)
6. Ground Return Fuse (5FU9)	13. Reactor Trip Bypass Breaker auxiliary contact
7. Input Error Inhibit Switch (S509)	14. Output Relay Power Fuse (6FU1) Monitor Relay K639

PROBABLE CAUSE

1. Solid State Protection Cabinet Train B 48VDC or 15VDC Power Supply failure.
2. Loose or removed circuit card.
3. Ground fault resulting in Ground Return Fuse (5FU9) failing.
4. One or more of the above switches in any position other than Normal.
5. Train "B" Reactor Trip Bypass Breaker closed.
6. Output relay power fuse failure.
7. Vital panel supply breaker tripped.

AUTOMATIC ACTION

1. IF both Train A AND B Solid State Protection System Trouble alarms are actuated, THEN a reactor trip will occur.

OPERATOR ACTIONS

1. IF alarm is due to preplanned operational or maintenance activities, THEN no action is necessary, IF NOT, notify appropriate personnel to determine and correct the cause of the alarm.
2. Refer to FNP-1-SOP-40.0, REACTOR CONTROL AND PROTECTION SYSTEM.
3. Return all switches to normal as soon as possible.
4. IF 120V vital AC bus has lost power, THEN refer to the appropriate annunciator window VD1, or VD2, 1C or 1D INV FAULT, for guidance.
5. Refer to Technical Specifications LCOs 3.3.1 and 3.3.2.

References: A-177100, Sh. 249; U-198768, D-181991, Sh. 3; D-181994, Sh. 1; Sect. 2.5.7; Technical Specifications

24. 015 AK3.01 002/BANK/FARLEY/HIGHER//RO/FARLEY/10/2007/NO

Given the following:

- Unit 2 is operating at 100% power.
- CCW cooling is lost to 2A RCP.
- NO operator action is taken.

Which ONE of the following conditions will FIRST occur and require the RCP to be tripped?

A. High #1 seal leakoff discharge temperature.

B. High motor radial bearing temperature.

C. High pump radial bearing temperature.

D. High pump shaft vibration.

A. Incorrect - There is no trip criteria for this parameter, and it should not increase significantly while seal injection is supplied.

B.Correct - Loss of CCW flow to the RCP motor oil coolers will cause high bearing temperatures on any running RCP within approximately two minutes.

C. Incorrect - There is still seal injection to the pump keeping cool water past radial bearing.

D. Incorrect - High vibs should not occur until after the bearings are wiped which is after the 2 minute time frame.

On a complete Loss of CCW Flow to RCP Motor Bearing Oil Coolers, the bearing temperatures will exceed 195°F in approximately 2 minutes.

Knowledge of the reasons for the following responses as they apply to the Reactor Coolant Pump Malfunctions (Loss of RC Flow) : Potential damage from high winding and/or bearing temperatures

Question Number: 41

Tier 1 Group 1

Importance Rating: RO 2.5

Technical Reference: ARP DD3; RCP LP OPS-52101D
Proposed references to be provided to applicants during examination: None
Learning Objective:
10 CFR Part 55 Content: 41.7

Comments:

Source :	BANK	Source if Bank:	FARLEY
Cognitive Level:	HIGHER	Difficulty:	
Job Position:	RO	Plant:	FARLEY
Date:	10/2007	Previous NRC?:	NO

LOCATION DD3

D3
CCW FLOW FROM RCP OIL CLRS LO

SETPOINT: 100 + 10 GPM
- 0

ORIGIN:
1. Flow Switch (Q1P17FISL3048A-N)
2. Flow Switch (Q1P17FISL3048B-N)
3. Flow Switch (Q1P17FISL3048C-N)

PROBABLE CAUSE

1. Loss of Component Cooling Water.
2. Loss of Component Cooling Water Flow to the RCP's due to Phase "B" isolation signal.
3. Improper valve lineup.

AUTOMATIC ACTION

NONE

OPERATOR ACTION

1. Determine the cause of the alarm.

2. IF a loss of Component Cooling Water has occurred, THEN perform the actions required by FNP-1-AOP-9.0, LOSS OF COMPONENT COOLING WATER.

3. Closely monitor the RCP's Motor Bearing Temperatures.

NOTE: On a complete Loss of CCW Flow to RCP Motor Bearing Oil Coolers, the bearing temperature will exceed 195°F in approximately 2 minutes.

4. IF any RCP Motor Bearing Temperature exceeds 195°F, THEN:
   A. IF the Reactor is critical, THEN trip the reactor.
   B. Stop the RCP.
   C. Perform the actions required by FNP-1-EEP-0, REACTOR TRIP OR SAFETY INJECTION.
   D. Perform action of FNP-1-AOP-4.0, LOSS OF REACTOR COOLANT FLOW as time allows.

5. Correct the cause of the alarm and return flow to normal.

References: A-177100, Sh. 198; B-175968, Pg. 6 & 7; D-175002, Sh. 2; U-258242

The squirrel-cage, induction motor section, mounted above the pump section, is of standard air-cooled construction. The motors receive three-phase electrical power from 4160-volt buses A, B, and C, located in the auxiliary building 139 foot elevation non-rad electrical equipment room. Each motor develops 6,000 horsepower during normal operation. Each motor has been equipped with a thrust bearing and two radial bearings, which are lubricated and cooled by oil. The bearing oil coolers and the thermal barrier heat exchanger receive cooling from component cooling water (CCW). The motor air cooler, which cools air leaving the motor, is cooled by service water.

Each RCP has a flywheel keyed to its shaft above the motor. The flywheel increases the total rotating inertia of the motor to ensure an extended coastdown of coolant flow through the reactor core in the event of a loss of electrical power to the pump. During normal at-power operation, loss of electrical power would cause a reactor trip. The requirement for coastdown flow from the pump exists for the short time it takes reactor power to decrease after the reactor trip. Due to the design of the RCS, coolant flow will then continue by natural circulation.

DETAILED DESCRIPTION

Hydraulics Section

Refer to Figures 1, 2 and 3. The hydraulic, or pump, section consists of a casing, impeller, diffuser, a thermal barrier heat exchanger assembly, a radial bearing assembly, and the pump shaft. The pump casing has been welded at both nozzles to the RCS piping. The impeller, which draws the water through the suction nozzle located at the bottom of the casing, provides the force necessary to move the reactor coolant. Once inside the casing, the water is forced by the impeller through the turning vane-diffuser and out through the discharge nozzle of the pump casing. The impeller mounts on the end of the pump shaft. The pump shaft connects the pump section with the motor section. Directly above the impeller, mounted around the shaft, is a thermal barrier/heat exchanger assembly that limits the transfer of heat from the reactor coolant system to the pump bearings and seals during normal operation. The pump radial bearing assembly, located above the thermal barrier, supports and aligns the pump shaft. Eight gallons per minute of high pressure seal injection water from the CVCS enters the pump between the thermal barrier and the radial bearing. A portion of this water (3 gpm) flows up along the shaft,

lubricating the radial bearing as it passes into the seal section of the unit. The remainder of the water (5 gpm) flows down the shaft, past the thermal barrier, where it acts as a buffer to prevent the lower pressure RCS water from entering the seal area. If injection flow were lost, the heat exchanger portion of the thermal barrier assembly would cool the RCS water entering the pump internals to an acceptable level. In this case, the upward flow of cooled RCS water (approximately 2 gpm) will be controlled by the seal system above the radial bearing.

Casing

The RCP casing is a casting of type-304 stainless steel that has three supports at the upper flange elevation for mounting the pump. These mounting feet and their supports bear the entire weight of the pump and motor. The supports attach in a manner that allows thermal expansion of the RCS. The inside diameter of the suction nozzle, located at the bottom of the casing, is approximately 31 inches. The inside diameter of the discharge nozzle, located on the side of the casing, is approximately 27.5 inches.

Impeller

The impeller, a type-304 stainless steel fabrication, has seven vanes designed for counterclockwise rotation, as viewed from the top of the pump. The impeller is shrunk and keyed to the lower end of the pump shaft, and an impeller nut is threaded and locked to the shaft. The impeller draws water through the suction nozzle and provides the force necessary to move reactor coolant

Diffuser Adaptor

The diffuser adaptor, a type-304 stainless steel conical casting, bolts to the bottom of the turning vane-diffuser and extends downward to a mating surface on the inside surface of the suction nozzle. The diffuser adapter prevents reactor coolant leakage between the outside diameter of the impeller and the inside diameter of the casing.

25. 015 K6.02 002/BANK/VCS/HIGHER//RO/2//NO

Given the following:

- Unit 2 was initially at 95% power.
- The reactor has tripped.
- Compensating voltage on N-35, Intermediate Range NI, is set too HIGH.

Which ONE of the following describes the response of Intermediate Range N-35 to the improperly set compensating voltage?

A. Indicates LOW; causing P-6 to reinstate the Source Range HI FLUX TRIP prematurely.

B. Indicates HIGH; preventing P-6 from automatically reinstating the Source Range HI FLUX TRIP.

C. Indicates HIGH; the Source Range HI FLUX TRIP will be reinstated by P-6 from the other IR channel (N-36).

D. Indicates LOW; the Source Range HI FLUX TRIP will be reinstated when P-6 is satisfied by the other IR channel (N-36).

A Incorrect; If one channel indicates low, it will satisfy it's own P-6 criteria. Therefore, if the logic was 1 of 2, A would be correct.

B Incorrect; Would be correct if the channel was undercompensated with the actual logic (1 out of 2 logic for going above P-6)

C Incorrect; If the logic was 1 out of 2 and the IR indicated high (undercompensated) then C would be correct.

D Correct; An overcompensated channel means that compensating voltage is too high for the channel, cancelling out part of the actual signal, resulting in a lower indication. The P-6 permissive is satisfied when 2 out of 2 IR channels are below the setpoint.

Knowledge of the effect of a loss or malfunction on the following will have on the NIS: Discriminator/compensation circuits

Question Number: 32

Tier 2 Group 2

Importance Rating: 2.6

Technical Reference: NI LP OPS-52201D
Proposed references to be provided to applicants during examination: None
Learning Objective:
10 CFR Part 55 Content: 41.7

Comments:

Source :	BANK	Source if Bank:	VCS
Cognitive Level:	HIGHER	Difficulty:	
Job Position:	RO	Plant:	2
Date:		Previous NRC?:	NO

neutron plus gamma current up through the meter, resulting in a neutron current only. This relationship can be expressed mathematically as follows:

$$(I_{neutron})_{meter} = (I_{neutron} + I_{gamma})_{outer\ volume} - (I_{gamma})_{inner\ volume}$$

Effects of Improper Compensation

Refer to Figures 12 and 13. The applied voltage to the inner volume (the compensation voltage) determines how many ion pairs will be collected for each gamma event. The inner volume current will be increased with an increased compensating voltage and decreased with a decreased compensating voltage. An increase or decrease in compensation voltage from the proper value is referred to as overcompensation or under-compensation, respectively.

With neutron flux high in the intermediate range, greater than 10^{-9} amps, the gamma flux becomes so insignificant that a compensation error will have no effect. However, as power decreases, the gamma flux becomes significant.

Overcompensation results in the inner volume gamma current being too high, causing the indicated neutron flux to be too low.

$$(I_{neutron})_{meter}\downarrow = (I_{neutron} + I_{gamma})_{outer\ volume}\rightarrow - (I_{gamma})_{inner\ volume}\uparrow$$

Under-compensation results in the inner volume gamma current being too low, causing the indicated neutron flux to be too high.

$$(I_{neutron})_{meter}\uparrow = (I_{neutron} + I_{gamma})_{outer\ volume}\rightarrow - (I_{gamma})_{inner\ volume}\downarrow$$

Under-compensation or overcompensation would show up on a reactor shutdown or trip. A properly compensated intermediate range (IR) will initially show a prompt drop of about two decades. Following the prompt drop, power will continue to decrease until the idling current causes the indicated intermediate range power to level off at 10^{-11} amps.

An overcompensated channel would act the same way until low in the intermediate range where it would drop off much faster.

An under-compensated channel would start to level off at a higher level than 10^{-11} amps. The worst case would occur if one intermediate range channel stalled above the P-6 set point (10^{-10} amps), preventing the source range from automatically re-energizing. The operators should now manually reset the source range at the MCB.

If these two channels do not read the same following a trip, the SUR is the key to recognizing which channel is improperly compensated. An overcompensated channel will have a

the source range, could be damaged or have its life shortened if allowed to operate when at higher power levels. When power is reduced, and P-6 clears, the high flux trip is reinstated and the source range high voltage is again applied to the detector. If one intermediate range channel were to fail high on a reactor shutdown or trip, the 1/2 function of P-6 would keep P-6 enabled. With P-6 enabled, the source range would not automatically re-energize. The block switches have a reset position that allows the operator to reinstate the reactor trip and re-energize the source range regardless of the condition of P-6. To ensure the source range does not get inadvertently energized when high in the power range, the source range reset is also interlocked with P-10. Whenever power exceeds P-10, the source range cannot be re-energized.

High Flux at Shutdown Alarm/Containment Evacuation Alarm

With the reactor shut down, a fairly steady-state neutron count rate exists. The count rate suddenly increasing would indicate a positive reactivity addition. The high flux at shutdown alarm on the MCB alarms at one half decade above the background count rate.

One half decade in this particular case refers to one half the meter distance between a point in a decade and the same point in the next decade. On a log scale, this would be equal to a factor of the square root of 10 (3.16). The alarm set point is determined by multiplying background count rate by 3.16.

At the same time the high flux at shutdown alarm sounds on the MCB, the containment evacuation alarm sounds in the containment. These alarms can be blocked at the NIS drawer during reactor start-ups.

Gamma-Metrics Neutron Flux Monitor

The Gamma-Metrics neutron flux monitor provides reliable reactor neutron flux measurement indication on the MCB and at the hot shutdown panels. The system has a single detector that is sensitive to over 12 decades of reactor neutron flux level. Thus, the single detector provides the same range of indication that the source, intermediate, and power range excore neutron detectors do combined. In addition, the Gamma-Metrics system, unlike the excore system, is designed to provide reactor power indication during and after a design basis accident. The Gamma-Metrics system is modularly designed and consists of the following four major assemblies: (1)

TABLE 5
PERMISSIVES

Permissive	Source	Set point	Coincidence & Light Status	Function
1. P-6 I/R Power Escalation Permissive	NI 35 and 36	10^{-10} amps	1/2 > set point Lit > set point Permission to Block Source Range NIs	Allows power escalation into the IR by turning Both Train A & B Source Range Block switches to BLOCK above set point 1. Blocks SR Hi Flux Reactor Trip. 2. Turns off Hi Volt to SR Instr. Below set point automatically reinstates Hi volt to SR Instr and SR Hi Flux Reactor Trip.
2. P-7 Low Power Rx Trip Block Permissive	P-10 P-13	10% Rx Power 10% Turb	3/4 PR NIs < set point or 2/2 Impulse Pressure Detectors < set point Lit < set point Permission to Trip RCPs, etc	Prevents unnecessary Reactor Trips at low power by auto blocking following Rx Trips below set point. 1. Low Rx Coolant Flow. 2. RCP Bkr. Trip. 3. RCP Bus UV. 4. RCP Bus UF. 5. PRZR Low Pressure. 6. PRZR High Level. Auto unblocks above Rx Trips above set point.

26. 016 G2.4.31 003/MODIFIED/WTSI/LOWER//SRO/FNP/6/2007/NO

Unit 1 was at 100% power
A transient occured requiring a rapid power reduction

HB1, PRZR LVL HI, annunciator is in alarm
EA2, CHG HDR FLOW HI-LO, annunciator is in alarm

CHG FLOW FI-122A indicates 140 gpm
PRZR LVL LT-459 indicates 73% rising slowly
PRZR LVL LT-460 indicates 74% rising slowly
PRZR LVL LT-461 indicates 73% rising slowly

Which ONE (1) of the following describes the required actions and applicability and Technical Specification Basis for the High Pressurizer Water Level reactor trip?

A. ✓ Enter AOP-16, CVCS MALFUNCTION, to stabilize and lower Pressurizer level to prevent a Reactor Trip; provides a backup trip to PRZR High Pressure reactor trip and provides protection against water relief through the PRZR safety valves.

B. Enter AOP-16, CVCS MALFUNCTION, to stabilize and lower Pressurizer level to prevent a Reactor Trip; provides primary protection for loss of load events and ensures that on a PRZR level channel failure, the PRZR safety valves will not lift prior to the PRZR High Pressure reactor trip.

C. Reactor trip is required, enter EEP-0.0, REACTOR TRIP OR SAFETY INJECTION; provides a backup trip to PRZR High Pressure reactor trip and provides protection against water relief through the PRZR safety valves.

D. Reactor trip is required, enter EEP-0.0, REACTOR TRIP OR SAFETY INJECTION; provides primary protection for loss of load events and ensures that on a PRZR level channel failure, the PRZR safety valves will not lift prior to the PRZR High Pressure reactor trip.

A: Correct. 70% is the alarm setpoint, Reactor trip is at 92%. ARP requires AOP-16 to correct the cause of the high level. ITS Basis 3.3.1, provides backup to PRZR High Pressure. If a level channel failed, pressure overshoot from the low rate of charging flow would not cause the safety valves to lift prior to reactor trip.

B: Incorrect. 70% is the alarm setpoint, Reactor trip is at 92%. ARP requires AOP-16 correct the cause of the high level. The trip does not provide primary protection. It is a backup.

C: Incorrect. 70% is the alarm setpoint, Reactor trip is at 92%. Plausible if Reactor Trip and TS PRZR level of 63.5% are confused. The alarm is > TS level, but < RT level. ARP requires AOP-16 correct the cause of the high level. Correct for reason of backup protection.

D: Incorrect. 70% is the alarm setpoint, Reactor trip is at 92%. Plausible if Reactor Trip and TS PRZR level of 63.5% are confused. The alarm is > TS level, but < RT level. ARP requires AOP-16 correct the cause of the high level. Incorrect for reason, it is the backup to the primary protection.

016 Non-Nuclear Instrumentation System (NNIS), Emergency Procedures / Plan Knowledge of annunciators alarms and indications, and use of the response instructions.

Question Number: 92

Tier 2 Group 2

Importance Rating: 3.4

Technical Reference: TS 3.3.1 Basis, ARP-1.8 for HB1
Proposed references to be provided to applicants during examination: None
Learning Objective:
10 CFR Part 55 Content: 43.2

Comments:

Source :	MODIFIED	Source if Bank:	WTSI
Cognitive Level:	LOWER	Difficulty:	
Job Position:	SRO	Plant:	FNP
Date:	6/2007	Previous NRC?:	NO

LOCATION HB1

SETPOINT: 70% of Level Span

ORIGIN: Level Bistable LB-460C from Level Transmitter LT-460 or LT-461

B1
PRZR LVL HI

PROBABLE CAUSE

1. Pressurizer Level Instrument or Control System malfunction.
2. Charging or Letdown System malfunction.
3. Void formation in the Reactor Coolant System.

AUTOMATIC ACTION

NONE

OPERATOR ACTION

1. Determine actual pressurizer water level as indicated by LI-459, LI-460 AND LI-461, on the MCB.
2. IF an instrument failure has occurred, THEN go to FNP-1-AOP-100, INSTRUMENT MALFUNCTION
3. IF a charging OR letdown system malfunction exists, THEN go to FNP-1-AOP-16.0, CVCS MALFUNCTION
4. Refer to Technical Specifications 3.3.1 and 3.4.9 for LCO requirements.

References: A-177100, Sh. 361; U-260610; U-266647 PLS Document

BASES

APPLICABLE SAFETY ANALYSES, LCO, and APPLICABILITY

a. Pressurizer Pressure — Low (continued)

protection provided by the Overtemperature ΔT trip Function. This trip is explicitly credited in the safety analyses to mitigate the consequences of a small break LOCA.

The LCO requires three channels of Pressurizer Pressure — Low to be OPERABLE. The channels are combined in a 2-out-of-3 trip Logic.

In MODE 1, when DNB is a major concern, the Pressurizer Pressure — Low trip must be OPERABLE. This trip Function is automatically enabled on increasing power by the P-7 interlock (NIS power range P-10 or turbine impulse pressure greater than approximately 10% RTP or turbine power). On decreasing power, this trip Function is automatically blocked below P-7. Below the P-7 setpoint, no conceivable power distributions can occur that would cause DNB concerns.

b. Pressurizer Pressure — High

The Pressurizer Pressure — High trip Function ensures that protection is provided against overpressurizing the RCS. This trip Function operates in conjunction with the pressurizer safety valves to prevent RCS overpressure conditions. The high pressure trip setpoint Limits the required range of protection provided by the Overtemperature ΔT trip Function.

The LCO requires three channels of the Pressurizer Pressure — High to be OPERABLE. The channels are combined in a 2-out-of-3 trip Logic.

The Pressurizer Pressure — High LSSS is selected to be below the pressurizer safety valve actuation pressure and above the power operated relief valve (PORV) setting. This setting minimizes challenges to safety valves while avoiding unnecessary reactor trip for those pressure increases that can be controlled by the PORVs and pressurizer spray valves.

(continued)

BASES

APPLICABLE SAFETY ANALYSES, LCO, and APPLICABILITY

b. Pressurizer Pressure — High (continued)

In MODE 1 or 2, the Pressurizer Pressure — High trip must be OPERABLE to help prevent RCS overpressurization and minimize challenges to the safety valves. In MODE 3, 4, 5, or 6, the Pressurizer Pressure — High trip Function does not have to be OPERABLE because transients that could cause an overpressure condition will be slow to occur. Therefore, the operator will have sufficient time to evaluate unit conditions and take corrective actions. Additionally, low temperature overpressure protection systems provide overpressure protection when below MODE 4.

9. Pressurizer Water Level — High

The Pressurizer Water Level — High trip Function provides a backup signal for the Pressurizer Pressure — High trip and also provides protection against water relief through the pressurizer safety and atmospheric relief valves. These valves are designed to pass steam in order to achieve their design energy removal rate, but are also qualified for limited water relief following specific transients. A reactor trip (Pressurizer Pressure — High) is actuated prior to the pressurizer becoming water solid. The Allowable value and Trip setpoint in Table 3.3.1-1 are specified in percent of instrument span. The LCO requires three channels of Pressurizer Water Level — High to be OPERABLE. The channels are combined in a 2-out-of-3 trip Logic. The pressurizer level channels are used as input to the Pressurizer Level Control System. A fourth channel is not required to address control/protection interaction concerns because: (1) The pressurizer pressure high trip function is credited as the primary protection for RCS overpressure or pressurizer overfill events; (2) overfill transients resulting from postulated pressurizer level channel failures are sufficiently slow, such that the operator has adequate time to take corrective actions; and (3) the pressurizer pressure low trip function and ESFAS Functions are credited as the primary protection for RCS depressurization or pressurizer empty events.

In MODE 1, when there is a potential for overfilling the pressurizer, the Pressurizer Water Level — High trip must be OPERABLE. This trip Function is automatically enabled on

(continued)

BASES

APPLICABLE SAFETY ANALYSES, LCO, and APPLICABILITY

9. Pressurizer Water Level — High (continued)

increasing power by the P-7 interlock. On decreasing power, this trip Function is automatically blocked below P-7. Below the P-7 setpoint, transients that could raise the pressurizer water level will be slow and the operator will have sufficient time to evaluate unit conditions and take corrective actions.

10. Reactor Coolant Flow — Low

The Allowable Value and Trip Setpoint for this function in Table 3.3.1-1 are specified in percent of indicated flow. The indicated flow is normalized based on the measured ΔP at 100% RTP (Ref. 1).

The Reactor Coolant Flow — Low (Single Loop) trip Function provides primary protection for all loss of flow events. For DNB limiting events, including complete loss of flow, this trip ensures that protection is provided against violating the DNBR limit due to low flow in one or more RCS loops, while avoiding reactor trips due to normal variations in loop flow. This trip Function also mitigates the consequences of an RCP locked rotor event by ensuring that the RCS pressure limit is not exceeded and that the core geometry remains amenable to cooling. Above the P-8 setpoint, which is approximately 30% RTP, a loss of flow in any RCS loop will actuate a reactor trip. Each RCS loop has three flow detectors to monitor flow. The flow signals are not used for any control system input.

The LCO requires three Reactor Coolant Flow — Low channels per loop to be OPERABLE in MODE 1 above P-8. The trip function is accomplished by 2-out-of-3 channels in a single Loop.

In MODE 1 above the P-8 setpoint, a loss of flow in one RCS loop could result in violating the DNB design basis. In MODE 1 below the P-8 setpoint, a loss of flow in two or more loops is required to actuate a reactor trip because of the lower power level and the greater margin to the design limit DNBR.

(continued)

Reactor Trip	Instrumentation (TSLB)	Setpoint	Coincidence
11. Pressurizer High Water Level	LI-459A,460,461 (TSLB2 18-1,18-2,18-3	92%	2/3 (RX Pwr >10%)
12. Low Reactor Coolant Flow	FI-414,415,416 FI-424,425,426 FI-434,435,436 (TSLB2 4-1,4-2,4-3, 5-1,5-2,5-3, 6-1,6-2,6-3)	90%	2/3 per loop on 1/3 loops (Rx Pwr > 30%) 2/3 per loop on 2/3 loops (30% > Rx Pwr > 10%)
13. RCP Breakers Open	Breaker Contacts (TSLB2 3-1,3-2,3-3)	Contacts Open	1/3 loops (Rx Pwr > 30%) 2/3 loops (30% > Rx Pwr > 10%)
14. RCP Bus Undervoltage	BUS Undervoltage Relays (TSLB2 1-1,1-2,1-3)	2680 V (0.6 sec time delay)	1/2 detectors on 2/3 Busses (Rx Pwr > 10%)
15. RCP Bus Underfrequency	BUS Underfrequency Relays (TSLB2 2-1,2-2,2-3)	57 Hz (0.3 sec . time delay)	1/2 detectors on 2/3 Busses (Rx Pwr > 10%)
16. Low Low SG Water Level	LI-474,475,476 LI-484,485,486 LI-494,495,496 (TSLB4 4-1,4-2,4-3, 5-1,5-2,5-3, 6-1,6-2,6-3)	28%	2/3 Detectors on 1/3 SGs
17. Turbine Trip	DEHC (TSLB2 13-1,13-2,13-3, 14-1,14-2,14-3, 14-4)	Low Auto Stop Oil at 45 psig or Throttle Valves Closed	2/3 for Auto Stop Oil or 4/4 Throttle Valves Closed (Rx Pwr > 35%)
18. SI	N/A	Any SI Signal	1/2 Trains
19. General Warning	N/A	N/A	2/2 Trains
20. Manual	N/A	N/A	1/2

27. 017 K1.02 001/MODIFIED//LOWER//RO/FARLEY/11/2007/NO

Which ONE of the following is correct concerning the temperature instruments used in the Subcooling calculations performed by the Subcooled Margin Monitor?

A.✓ In the RTD mode, the highest reading RTD of the 3 Wide Range RCS Hot leg and 3 RCS Wide Range Cold Legs is used.

B. In the Individual Value display mode, the lowest reading of Core Exit and Upper Head Thermocouples is used.

C. In the Individual Value display mode, the fifth hottest of all Core Exit Thermocouples (excluding the Upper Head thermocouples) is used.

D. In the Core Exit Thermocouple mode, the highest reading Thermocouple of the Core Exit Thermocouples and Upper Head thermocouples is used.

A. Correct. This is the method used in the RTD mode, but has a greater time delay in indication of a loss of subcooling due to loop transit time and instrument RTD response time than the CETC mode.

B. Incorrect. This would be correct if it said the "highest" instead of the lowest.

C. Incorrect. The upper head TCs are not excluded from the calculation in the individual value mode, and also the fifth hottest is not used in the calculation even though the fifth hottest is used for diagnostic purposes throughout the ERG procedure network.

D. Incorrect. In the Core Exit Thermocouple Mode, the hottest of all Core Exit Thermocouples (excluding the Upper Head thermocouples) is used. This instrument is correct for this one (of the three) Subcooled Margin Monitor Modes. The CETC mode is the normal mode of the Subcooled Margin Monitor because the outlet of the core is the most significant area of concern to monitor the potential for boiling in the core. The upper head region is somewhat physically separated from the core outlet, and the Subcooling may be higher or lower in the Upper Head than at the core outlet.

Knowledge of the physical connections and/or cause effect relationships between the ITM system and the following systems: RCS

Question Number: 33

Tier 2 Group 2

Importance Rating: 3.3

Technical Reference: ICCMS LP OPS-52202E
Proposed references to be provided to applicants during examination: None
Learning Objective:
10 CFR Part 55 Content: 41.5

Comments:

Source :	MODIFIED	Source if Bank:	
Cognitive Level:	LOWER	Difficulty:	
Job Position:	RO	Plant:	FARLEY
Date:	11/2007	Previous NRC?:	NO

b. Channel B - PT-457

4. RCS pressure (lowest compared to pressurizer pressure)

a. PT-402 - feeds each channel

b. PT-403 - feeds each channel

The normal display mode for the SMM is the "CETC" mode. This displays the margin to saturation (°F) using the highest CETC (excluding the upper head) and the lowest pressure input.

Another mode is the "RTD" mode, which displays the margin to saturation (°F) using the hottest RCS RTD (T_h or T_c) and the lowest pressure. Due to the slower response of the RTDs, a loss of core subcooling may not be detected as rapidly as in the "CETC" mode.

These modes are selected by depressing the "CETC/RTD" push button until the appropriate half of the split lens is illuminated.

A method is also provided to perform a lamp test and display the following:

1. T_{hot} and T_{cold} RTDs
2. PT-402, PT-403, and pressurizer (1) pressures
3. Pressure margins for:

a. RCS using RTDs

b. CETCs

c. Upper head/CETC (highest)

4. Upper head/CETC temperature margin

These functions are accessed similarly to the individual value displays for the HJTC monitor in accordance with SOP-68.0.

Individual value displays are exited by one of the following two methods:

1. No operator/monitor interaction for three minutes, except for point 16 (automatic exit).
2. Wait for "----," then depress "CETC/RTD" push button.

Alarms are generated by any one or more of the following:

1. Any individual failed input
2. Less than eight valid CETC inputs
3. Only one valid RCS hot leg input
4. CETC or RCS temperature margin alarm or failure (<10°F subcooled)

shall be considered uncovered if the sensor above it is uncovered. Top sensors will be considered covered for failed sensors, and the next sensor will trigger the low RVL alarm.

If one heater fails (shorts), the low differential temperature alarm setpoint of 25°F will be exceeded, and the appropriate error for that sensor will be displayed on the HJTC monitor. If one heater fails (open), four sensor locations will be affected. When an odd numbered sensor fails, all the odd numbered sensors in that channel will exceed the low alarm setpoint. An additional error will be displayed, which notes that a heater power controller may be failed. This open heater failure also is displayed for even numbered heaters.

Subcooled Margin Monitor (SMM) (Figure 11)

The SMM displays the temperature margin to saturation (including superheat) in degrees Fahrenheit and coolant pressure margin to saturation in psig on the MCB.

First, saturation temperature is calculated using the minimum of the pressure inputs, and saturation pressure is calculated using the maximum temperature input. The temperature margin to saturation is the saturation temperature minus the maximum temperature, excluding the upper head thermocouples (in the CETC mode). The pressure margin to saturation is the minimum pressure input minus the saturation pressure. Superheat margin to saturation is displayed as a negative number, while the subcooling is displayed as a positive number.

The temperature margin and the pressure margin to saturation are both calculated for the three following areas:

1. RCS using resistance temperature detectors (RTDs) (in the RTD mode)
2. Highest thermocouple - core exit or upper head (in the individual valve display mode)
3. Highest CETC (in the CETC mode)

The inputs to the SMM are as follows per channel:

1. RTDs
   a. 3 T_{hot}
   b. 3 T_{cold}
2. Thermocouples (highest)
3. Pressurizer pressure (lowest compared to RCS pressure)
   a. Channel A - PT-455

b. Channel B - PT-457

4. RCS pressure (lowest compared to pressurizer pressure)

a. PT-402 - feeds each channel

b. PT-403 - feeds each channel

The normal display mode for the SMM is the "CETC" mode. This displays the margin to saturation (°F) using the highest CETC (excluding the upper head) and the lowest pressure input.

Another mode is the "RTD" mode, which displays the margin to saturation (°F) using the hottest RCS RTD (T_h or T_c) and the lowest pressure. Due to the slower response of the RTDs, a loss of core subcooling may not be detected as rapidly as in the "CETC" mode.

These modes are selected by depressing the "CETC/RTD" push button until the appropriate half of the split lens is illuminated.

A method is also provided to perform a lamp test and display the following:

1. T_{hot} and T_{cold} RTDs
2. PT-402, PT-403, and pressurizer (1) pressures
3. Pressure margins for:

a. RCS using RTDs

b. CETCs

c. Upper head/CETC (highest)

4. Upper head/CETC temperature margin

These functions are accessed similarly to the individual value displays for the HJTC monitor in accordance with SOP-68.0.

Individual value displays are exited by one of the following two methods:

1. No operator/monitor interaction for three minutes, except for point 16 (automatic exit).
2. Wait for "----," then depress "CETC/RTD" push button.

Alarms are generated by any one or more of the following:

1. Any individual failed input
2. Less than eight valid CETC inputs
3. Only one valid RCS hot leg input
4. CETC or RCS temperature margin alarm or failure (<10°F subcooled)

28. 022 AA2.04 002/BANK/WTSI/HIGHER//RO/VC SUMMER AUDIT/5/2007/

Given the following:

- Unit 1 was at 65% power when all charging flow was lost.
- The following conditions exist:
  - The RO reports that PRZR level is lowering at a rate of 1% every five (5) minutes.

If charging flow is not restored, approximately how much time will pass before letdown is automatically isolated, assuming no operator actions are taken?

A. 1 hour

B. 1.5 hours

C. 2 hours

D. 2.5 hours

A. Incorrect; 1/2 the value of C.

B. Incorrect; 65 muliplied by .274 result is approx. 17.8. Level lowering at 1% every 5 minutes yields approx. 89 minutes, about 1.5 hours.

C. Correct; At 65% power, program level is approximately 39.2%. Letdown isolates at 15%. Therefore, 24.2% of span prior to isolation. Lowering at 1% every 5 minutes yields 121 minutes, about 2 hours

D. Incorrect; Using the 17.8% and subtracting from 48.8% level yields approx. 89 minutes, about 2.5 hours

Unit 100% program level is approx. 48.8% and is 21.4% at 0% power.
This gives level change of approx. 0.274% per percent power.
Letdown isolates at 15%.

Options are plausible because they are symmetrical and not significantly different from actual time. A math error or misunderstanding of program level at this power could direct an applicant to any option.

Ability to determine and interpret the following as they apply to the Loss of Reactor Coolant Pump Makeup: How long PZR level can be maintained within limits

Question Number: 42

Tier 1 Group 1

Importance Rating: RO 2.9

Technical Reference: OPS 52201H FIG 6
Proposed references to be provided to applicants during examination: None
Learning Objective:
10 CFR Part 55 Content: 41.7

Comments:

Source :	BANK	Source if Bank:	WTSI
Cognitive Level:	HIGHER	Difficulty:	
Job Position:	RO	Plant:	VC SUMMER AUDIT
Date:	5/2007	Previous NRC?:	

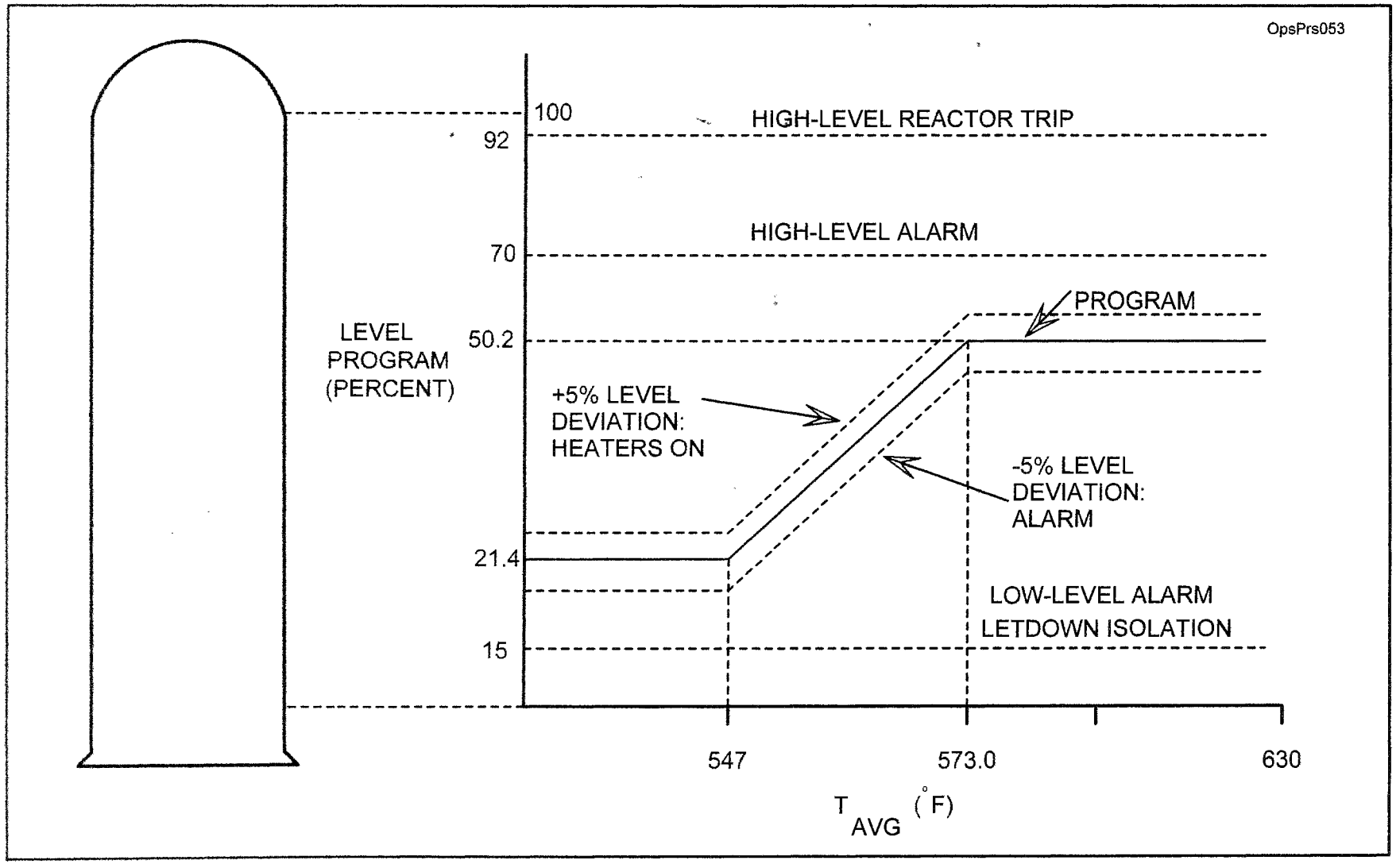

Pressurizer Level Program

Figure 6

30. 022 K1.02 005/BANK/FARLEY/LOWER//RO/FARLEY/10/2007/NO

Given the following:

- Unit 1 was operating at 100% power.
- A large break LOCA occurred, followed immediately by a loss of offsite power.

Which ONE of the following describes the response of the containment coolers to this event?

A. Four containment coolers start in fast speed approximately 30 seconds after the closure of diesel generator output breakers.

B. Four containment coolers start in slow speed approximately 30 seconds after the closure of diesel generator output breakers.

C. Two containment coolers start in fast speed approximately 30 seconds after the closure of diesel generator output breakers.

D. Two containment coolers start in slow speed approximately 30 seconds after the closure of diesel generator output breakers.

A. Incorrect - Only two fans will be running following an LOSP, one per train per the selector switches on the main control board; with an SI the fan speed will shift to slow speed.

B. Incorrect - Only two fans will be running following an LOSP, one per train running in slow speed.

C. Incorrect - Above statement makes this choice incorrect, only two will be running in slow speed following an LOSP regardless of the presence of an SI signal.

D. Correct - With an LOSP and SI, one cooling fan in each train will start in slow speed, based on the selector switches on the MCB.

A loss of off-site power (LOSP) or a safety injection actuation will trip all four coolers in fast speed. If an LOSP has occurred, the selected fan cooler in each train will be sequenced on from the LOSP sequencer in slow speed. If a safety injection occurs and off-site power is available, then all available containment cooler fans will automatically start in slow speed. If a safety injection occurs and off-site power is not available, then the selected fan cooler for each train will be sequenced on in slow speed.

Knowledge of the physical connections and/or cause-effect relationships between the CCS and the following systems: SEC/remote monitoring systems

Question Number: 14

Tier 2 Group 1

Importance Rating: 3.7

Technical Reference: Cont Cool &CS; DG SEQ LP OPS-52103F
Proposed references to be provided to applicants during examination: None
Learning Objective:

10 CFR Part 55 Content: 41.5

Comments:

Source :	BANK	Source if Bank:	FARLEY
Cognitive Level:	LOWER	Difficulty:	
Job Position:	RO	Plant:	FARLEY
Date:	10/2007	Previous NRC?:	NO

The first load group, the ESS sequencer group, will be restored whenever an SIAS occurs. This load group consists of loads supplied from buses F, G, K, and L. The ESS sequencer receives input from the memory circuit. If an SI exists and off-site power is available to the emergency buses, the ESS sequencer will start all ESS loads on steps 1 – 5 at one time. If off-site power is not available, the ESS sequencer will start the ESS loads sequentially.

The second load group, the LOSP sequencer group, will be restarted sequentially whenever an LOSP condition exists without an SI. The little diesel (1C) river water sequencers also may be considered as LOSP sequencers. The river water sequencers start the 1C diesel generator and re-energize its associated emergency bus, making power available to start river water pumps manually, as needed, to maintain service water pond level. No river water pumps are sequenced automatically by the sequencers.

The ESS and LOSP loads are divided between the two emergency bus trains for each unit in a balanced and redundant manner. Due to the load arrangement, only one train per unit needs to be operable to supply the loads required for the safe shutdown of the unit. The following chart denotes the loads started on each step for both an ESS and LOSP sequencer signal:

Step	ESS Sequencer Loads	LOSP Sequencer Loads
1	Charging pump	Charging pump Rx cavity cooling fan
2	RHR pump, CTMT spray pump	Service water pump, CRDM cooler fan
3	Service water pumps	Service water pump
4	CCW pump, CTMT cooler	CCW pump, CTMT cooler
5	MDAFW pump, Rx cavity H2 dilution fan	MDAFW pump
6	Battery charger, Load Center "A" (Air compressor)	Battery charger, Load Center "A" (Air compressor)

event of an LOSP and/or SI, the diesels are automatically started and become available to supply power to the emergency buses.

Prior to aligning the diesel generators to the emergency buses, the diesel generator sequencers send a signal to trip the circuit breakers of the large pump motors and nonessential bus loads. If these circuit breakers were not opened prior to aligning the diesel to the bus, a large amount of electrical load would instantaneously be placed on the diesel generator. The load shedding of the buses, prior to generator alignment, prevents the generator output voltage and frequency from dropping below minimum requirements.

The diesel generator and sequencer design assumes the worst case situation--an SI on one unit with an LOSP on both units. This design is very conservative since the probability of a simultaneous dual unit SI is very low.

Either the LOSP or SI results in a reactor trip on that unit. The electrical load requirements for safely shutting down a reactor after an LOSP are considerably less than the electrical load requirements for a unit with an LOSP concurrent with an SI. Consequently, the unit with the SI will have the higher priority for emergency electrical power.

The diesel generator sequencers utilize logic memory circuits to determine and remember which unit has the highest priority. The diesel generator sequencers then assign the swing diesel generator outputs accordingly to re-energize the emergency buses. The swing diesels (1-2A and 1C) each have two output breakers so that they may be used to supply their associated buses on either unit. The dedicated diesels (1B and 2B) each have one output breaker and may only supply their associated bus on their designated unit.

Following the re-energization of the buses from the diesel generators, the sequencers start equipment that is supplied from the emergency buses. The essential loads controlled by the sequencers have been arranged into two load groups, each having six steps. Each loading step is energized by the diesel generator in a predetermined sequence. The time interval between each step (approximately five seconds) is sufficient to allow the load starting current (five to seven times normal load current) to decay before proceeding with the next sequential load step. Allowing the starting current to decay ensures that the emergency bus's voltage and frequency remain above design requirements.

motor-operated valves to open, and flow to be delivered to the spray nozzles. A small time margin is incorporated to account for the closure of the pump breakers and any inaccuracies of the assumed times.

3. Containment coolers are required to start within 27.4 seconds following an LOSP. However, the service water pumps must be running prior to starting the containment coolers. The service water pumps have been assigned to step 3, and the containment coolers have been assigned to step 4 of the load sequencers. The sequencer step in which the containment fan coolers must be started is determined by a load sequence time interval of five seconds between any two subsequent steps, diesel start time, fan cooler breaker closure time, and fan acceleration time.

These considerations, together with the diesel generator frequency and voltage requirements, led to the selection of the load sequence time interval of five seconds. Evaluation of the load sequencers and the diesel starting time indicates that neither a diesel generator starting time of 12 seconds nor the load sequence time interval of five seconds can be increased without exceeding the required response time values of the various engineered safety features and the diesel generator capability.

LOSP Load Sequencers

If off-site power becomes unavailable, a reactor trip will occur. The loads required to safely shut down the unit after a reactor trip will be started in a predetermined sequence by the big diesel LOSP sequencers. The loads have been divided into six steps, with five-second time intervals between steps. The time intervals are based on the diesel generator capabilities. If an SI is received subsequent to an LOSP condition, the LOSP sequencer will stop where it is, and the ESS sequencer will start at step one to run those ESF loads not already started by the LOSP sequencer. This could lead to an emergency diesel generator being above its continuous load rating because all the LOSP and ESS loads will be running. The major ESS loads that would not already be running would be the RHR pumps and, possibly, containment spray pumps.

TABLE 4, CONT.
Load Shedding and Diesel Loading, DG 1-2A

					ESS Sequencer		Loss of Off-site Power Sequencers	
Bkr No.	Description	Equip Rating	Train	Shed Load	Step No.	Notes	Step No.	Notes
			600V LCC 2K					
EK-05	Bus Tie Bkr to LC 1K		A	No				
EK-08	From 4160V Bus 2K		A	No				
EK-09	Screen Wash Pump		A	No				
			MCC 2A					
FA-F7	Reactor Cavity Cooling Fan 2A	15 HP	A	No			1	
HA-09	Reactor Cavity H_2 Dilution Fan 2A	8 HP	A	No	5	Note 7		

Note 2: Shed if Bkr ED12 is open.
Note 4: Start Pump 2C or 2B.
Note 5: Start Pump 2A or 2B.
Note 7: Starts with 5 minute time delay.
Note 8: Any battery charger on service prior to event will auto sequence on.
Note 9: During LOSP events (LOSP only or LOSP/SI), only one CTMT cooler per train will be sequenced on the diesels. The cooler that will be sequenced is the one that is selected by the CTMT cooler low speed train A selector switch on the MCB. In events involving SI only (no LOSP), the selector switch is bypassed, and both CTMT coolers are sequenced.)
Note 10: Shed via LC 1A UV aux relay.
Note 11: Sequenced on only if an LOSP has occurred in conjunction with an SI.
Note 12: Start pump 1C or 1B.
Note 13: Start pump 1A or 1B.
Note 14: Shed via LC-2A UV aux relay.
Note 15: EA15 recloses when LCC 1(2)A is reenergized by the sequencer.

TABLE 6, CONT.
Load Shedding and Diesel Loading, DG 1B

					ESS Sequencer		Loss of Off-site Power Sequencers	
Bkr No.	Description	Equip Rating	Train	Shed Load	Step No.	Notes	Step No.	Notes
600V LOAD CENTER 1L								
EK-02	From 4160V Bus 1L		B	No				
EK-09	Screen Wash Pump	50 HP	B	No				
EK-05	Bus Tie Bkr To LC 2L		B	No				
MCC 1B								
FB-J7	Reactor Cavity Cooling Fan 1B		B	No			1	

Note 2: Shed if Bkr ED12 is open.
Note 7: Starts with 5 minute time delay.
Note 8: Any battery charger on service prior to event will auto sequence on.
Note 9: During LOSP events (LOSP only or LOSP/SI), only one CTMT cooler per train will be sequenced on the diesels. The cooler that will be sequenced is the one that is selected by the CTMT cooler low speed train ~~A~~ selector switch on the MCB. In events involving SI only (no LOSP), the selector switch is bypassed, and both CTMT coolers are sequenced.)
Note 12: Start pump 1C or 1B.
Note 13: Start pump 1A or 1B.

B 9/5/07

29. 022 G2.1.14 002/MODIFIED//HIGHER//SRO/FARLEY/10/2007/

Given the following:

- Unit 2 is at 100% power
- The following alarms are received:
  - HB2, PRZR LVL DEV LO
  - DE1, REGEN HX LTDN FLOW DISCH TEMP HI
  - EA2, CHG HDR FLOW HI-LO
- The RO determines that Pressurizer level is trending DOWN and VCT level is trending UP.
- RCS temperature and pressure are stable.

Which ONE of the following describes the event in progress and action required?

A. Charging flow control valve failed closed. Isolate Letdown and place Excess Letdown in service in accordance with FNP-2-AOP-16.0, CVCS Malfunctions.

B. Pressurizer Level Transmitter failed low. Select an alternate channel in accordance with FNP-2-AOP-100, Instrument Malfunctions.

C. Charging flow control valve failed closed. Establish Manual control of Charging flow or dispatch an operator to bypass the Charging flow control valve in accordance with FNP-2-AOP-16.0, CVCS Malfunctions.

D. Charging line leak outside containment. Isolate the leak in accordance with FNP-2-AOP-1.0, RCS Leakage.

A. Incorrect. Credible due to correct failure, but wrong actions.

B. Incorrect. Pressurizer level would be trending up for operable channel and VCT level would be trending down. Credible because there is a transient involved.

C. Correct.

D. Incorrect. VCT level would be trending down.

Conduct of Operations: Knowledge of system status criteria which require the notification of plant personnel.

Question Number: 77

Tier 1 Group 1

Importance Rating: SRO 3.3

Technical Reference: AOP-16.0
Proposed references to be provided to applicants during examination: None
Learning Objective:
10 CFR Part 55 Content: 43.5

Comments:

Source :	MODIFIED	Source if Bank:	
Cognitive Level:	HIGHER	Difficulty:	
Job Position:	SRO	Plant:	FARLEY
Date:	10/2007	Previous NRC?:	

Step	Action/Expected Response	Response NOT Obtained
	NOTE: Excess letdown may be placed on service anytime it is desired during the performance of this procedure in accordance with FNP-1-SOP-2.7, CHEMICAL AND VOLUME CONTROL SYSTEM EXCESS LETDOWN.	
___ 1	**Stop any load change in progress**	
	NOTE: IF VCT level indication is lost due to a low level, OR IF it is suspected that the lower level tap has been uncovered, THEN the VCT level transmitters will need to be vented for reliable level indication.{2006203596}	
___ 2	**Monitor VCT level to ensure proper level is maintained**	

___Page Completed

Step	Action/Expected Response	Response NOT Obtained

****

CAUTION: Oscillating flow indications and/or ammeter indications could be indicative of air or gas intrusion into the charging pump suction. IF such indications are present, THEN consideration should be given to securing both letdown and any running charging pump AND ensuring the charging pump suction piping is adequately vented prior to return to service.(Ref.SOER 97-1)

****

NOTE: Step 3.0 is a continuing action step.

___	3	**Observe CHG HDR PRESS and MOTOR AMPS to ensure proper charging pump operation. (SOER 97-1)** [] PI-121 [] AMMETER FOR RUNNING CHG PUMP	3 IF VCT level reduces to 5%, THEN perform the following: 3.1 Open RWST TO CHG PUMP valves [] Q1E21LCV115B [] Q1E21LCV115D 3.2 Close VCT OUTLET ISO valves [] Q1E21LCV115C [] Q1E21LCV115E
___	4	**Check on service charging pump - RUNNING**	4 IF the running charging pump tripped on overload, THEN perform the following: 4.1 Verify auto start of swing charging pump. 4.2 IF required, THEN perform the following: 4.2.1 Start the off service CCW pump. 4.2.2 Start the off service charging pump.

___Page Completed

Step	Action/Expected Response	Response NOT Obtained
___ 5	**Check Charging flow FK-122 controlling in AUTO with flow indicated**	5 <u>IF</u> required, <u>THEN</u> take manual control of charging flow: 5.1 Place FK-122 in manual and adjust as required to maintain pressurizer level at program level. 5.2 Adjust SEAL WTR INJECTION HIK-186 as required to maintain RCP seal injection flow 6-13 gpm. 5.3 <u>IF</u> manual control of charging not accomplished, <u>THEN</u> refer to ATTACHMENT 1, MANUAL CONTROL OF CHARGING FLOW.
___ 6	**Check the following annunciator - CLEAR** [] DE3 LTDN ORIF ISO VLV REL LINE TEMP HI	6 Perform the following: 6.1 Check PRT parameters - STABLE [] PRT PRESS PI 472 [] PRT LVL LI-470 [] PRT TEMP TI-471 6.2 <u>IF</u> leakage to the PRT is excessive, <u>THEN</u> perform the following: 6.2.1 Verify LTDN ORIF ISO valves - CLOSED [] Q2E21HV8149A [] Q2E21HV8149B [] Q2E21HV8149C 6.2.2 <u>IF</u> BTRS is in operation, <u>THEN</u> remove BTRS from service. • FNP-2-SOP-3.0, BORON THERMAL REGENERATION SYSTEM

___Page Completed

Step	Action/Expected Response	Response NOT Obtained
___ 7	**Determine Status of Normal Letdown:**	
	7.1 Check normal CVCS letdown - AFFECTED BY MALFUNCTION • LTDN HX OUTLET FLOW, FI-150 - NO FLOW INDICATED	7.1 IF normal CVCS letdown is on service, THEN proceed to Step 17.
___	7.2 Minimize RCS makeup:	
	7.2.1 Manually close charging flow control: CHG FLOW [] FK-122	
	7.2.2 Minimize seal injection between 6-13 gpm	
	7.2.3 Direct Chemistry to shutdown the zinc addtion system (ZAS)	
	7.3 Dispatch personnel to investigate cause of the Letdown malfunction	
___	7.4 IF desired due to plant conditions, THEN place excess letdown in service per: • FNP-1-SOP-2.7, CHEMICAL AND VOLUME CONTROL SYSTEM EXCESS LETDOWN	

___Page Completed

Step	Action/Expected Response	Response NOT Obtained

****

CAUTION: Decreasing CHG flow significantly will increase LTDN temperature. Maintain sufficient CHG flow to prevent LTDN temperature at the LTDN heat exchanger outlet from exceeding 135°F.

****

NOTE: With FK-122 M/A station in AUTO flow controller FK-122 limits high flow to 130 gpm and low flow to 18 gpm.

___17	**Determine Charging Status:**	
	17.1 Check charging - AFFECTED BY MALFUNCTION • CHG FLOW, FI-122A - ABNORMAL FLOW INDICATED	17.1 IF charging is normal, THEN go to procedure and step in effect.
___	17.2 Check Charging flow - CONTROLLED [] FK-122 in AUTO OR [] FK-122 in MANUAL	17.2 Dispatch personnel to initiate manually bypass of FCV-122 per ATTACHMENT 1, MANUAL CONTROL OF CHARGING FLOW.
___18	**Check VCT outlet isolation valves - OPEN** [] Q1E21LCV115C [] Q1E21LCV115E	18 Verify open RWST TO CHG PUMP suction valves: [] Q1E21LCV115B [] Q1E21LCV115D
___19	**Verify charging pump suction header aligned:** [] Q1E21MOV8130A open [] Q1E21MOV8130B open [] Q1E21MOV8131A open [] Q1E21MOV8131B open	

___Page Completed

Step	Action/Expected Response	Response NOT Obtained
___20	**Verify charging pump discharge flow path-ALIGNED** CHG PUMP DISCH HDR ISO [] Q1E21MOV8132A open [] Q1E21MOV8132B open [] Q1E21MOV8133A open [] Q1E21MOV8133B open CHG PUMPS TO REGENERATIVE HX [] Q1E21MOV8107 open [] Q1E21MOV8108 open	
___21	**Maintain pressurizer level between 20-60%:**	
	21.1 Check pressurizer level - STABLE	21.1 <u>IF</u> pressurizer level is increasing <u>AND</u> <u>NOT</u> stable, <u>THEN</u>: 21.1.1 Adjust letdown flow as necessary: • Increase letdown flow to 120 gpm
___		

Step 21 continued on next page.

___Page Completed

Step	Action/Expected Response	Response NOT Obtained
		21.1.2 IF additional control is necessary to reduce pressurizer level, THEN Isolate the RCS as follows: 21.1.2.1 Place LP LTDN PRESS PK 145 in MANUAL and verify demand signal is approximately 50%. 21.1.2.2 CLOSE LTDN ORIF ISO's: [] Q1E21HV8149A,B and C [] Q1E21HV8149B [] Q1E21HV8149C 21.1.2.3 IF desired, THEN close both LTDN LINE ISO's: [] Q1E21LCV459 [] Q1E21LCV460 21.1.2.4 Isolate charging flow by closing one of the CHG PUMP TO REGENRATIVE HX MOVs: [] Q1E21MOV8107 OR [] Q1E21MOV8108
___	21.2 Alternately cycle open and closed one of the following MOVs for charging control as required: CHG PUMPS TO REGENERATIVE HX [] Q1E21MOV8107 [] Q1E21MOV8108	
___	21.3 Adjust SEAL WTR INJECTION HIK-186 as required to maintain RCP seal injection flow 6-13 gpm	

Step 21 continued on next page.

___Page Completed

Step	Action/Expected Response	Response NOT Obtained
___ 21.4	Check pressurizer level - STABLE or DECREASING	21.4 Place excess letdown in service per: • FNP-1-SOP-2.7, CHEMICAL AND VOLUME CONTROL SYSTEM EXCESS LETDOWN
___ 22	**Check charging flow - ESTABLISHED**	22 Perform the following:
___		22.1 Continue maintaining pressurizer level with excess letdown flow and seal injection.
		22.2 Continue efforts to correct the charging malfunction.
___		22.3 WHEN affected component(s)are restored, THEN establish normal charging:
___		22.3.1 Open charging flow regulator outlet valve Q1E21V134A.
___		22.3.2 Verify CHG FLOW FK-122 has a demanded output that indicates closed.
___		22.3.3 Open charging flow regulator inlet valve Q1E21V134B.
___		22.3.4 IF previously isolated, THEN open the following valves as required to establish charging flow: CHG PUMP TO REGENRATIVE HX MOVs: [] Q1E21MOV8107 [] Q1E21MOV8108

Step 22 continued on next page.

___Page Completed

Step	Action/Expected Response	Response NOT Obtained
___		22.3.5 Restore flow through FCV-122: 22.3.5.1 IF FCV-122 is bypassed, THEN: a) Slowly throttle closed charging flow regulator bypass valve: • Q1E21V135 OR • Q1E21V581 b) Verify FK-122 in MANUAL. c) Adjust charging flow to control pressurizer level. 22.3.5.2 IF FK-122 is in MANUAL, THEN establish minimum charging flow for one orifice on service. (18 gpm)
___		22.3.6 Verify charging flow regulator bypass valves - CLOSED
___		• Q1E21V581
___		• Q1E21V135

___Page Completed

Step	Action/Expected Response	Response NOT Obtained

****

CAUTION: To prevent heat exchanger damage, do not attempt restoration of letdown unless the CCW miscellaneous header is aligned to an operating CCW loop.

****

___23 **Determine if normal letdown should be re-established:**

23.1 Check normal letdown malfunction(s) - CORRECTED

23.1 Return to Step 7.

___ 23.2 Verify all letdown orifice isolation valves - CLOSED

LTDN ORIF ISO
45 GPM
[] Q1E21HV8149A

LTDN ORIF ISO
60 GPM
[] Q1E21HV8149B
[] Q1E21HV8149C

___ 23.3 Place LP LTDN PRESS PK 145 on service:

[] Place controller in AUTO
[] Adjust demand signal to 50% or less

___ 23.4 Place LTDN HX OUTLET TEMP TK 144 on service:

[] Place controller in AUTO
[] Set at 3.3 to maintain temperature at approximately 100°F

___ 23.5 Verify VCT HI LVL DIVERT VLV LCV-115A:

[] Position indicator VCT light - LIT
[] Handswitch in - AUTO

Step 23 continued on next page.

___Page Completed

Step	Action/Expected Response	Response NOT Obtained
___	23.6 Verify LTDN HI TEMP DIVERT VLV Q1E21TCV143: [] DEMIN light - LIT [] Handswitch in - AUTO	
___	23.7 Verify LTDN LINE PENE RM ISO's valves - OPEN [] Q1E21HV8175A [] Q1E21HV8175B	
___	23.8 Verify LTDN LINE CTMT ISO Q1E21HV8152 - OPEN	
___	23.9 Verify LTDN LINE ISO valves - OPEN [] Q1E21LCV459 [] Q1E21LCV460	
	23.10 Initiate minimum charging flow:	
___	23.10.1 Verify CHG FLOW FK 122 in - MAN	
___	23.10.2 Establish minimum charging flow based on orifices to be placed on service:	
___	• 1 Orifice - 18 gpm OR • 2 Orivices - 40 gpm	
___	23.11 Establish 60 gpm letdown flow by OPENING:	
___	[] Q1E21HV8149B OR	
___	[] Q1E21HV8149C	

Step 23 continued on next page.

___Page Completed

Step	Action/Expected Response	Response NOT Obtained
___	23.12 Adjust LP LTDN PRESS PK 145 to maintain desired letdown pressure - BETWEEN 260-450 PSIG	23.12 IF necessary, THEN adjust LP LTDN PRESS PK 145 in MANUAL to stabilize Letdown Pressure at desired value.
	23.12.1 Set controller between 4.3 and 7.5	
	23.12.2 Check letdown - STABLE	
___	23.12.3 Place in AUTO	
___	23.12.4 Verify Letdown pressure is maintained at the desired value.	
___	23.13 Verify that LTDN HX OUTLET TEMP TK 144 is maintaining Letdown temperature at approximately 100 F: [] TI-116 VCT TEMP [] TI-143 DIVERT LTDN HX TEMP [] TI-144 CCW LTDN HX TEMP	
___	23.14 Refer to FNP-1-SOP-2.1, CHEMICAL AND VOLUME CONTROL SYSTEM PLANT STARTUP AND OPERATION, for further guidance on Letdown system control	
___	**24 Go to procedure and step in effect.**	

-END-

31. 025 AA2.04 004/BANK//HIGHER//SRO/FARLEY/10/2007/NO

Given the following:

- Unit 1 is in Mode 5 at 120° F with SG manways open to remove nozzle dams after core reload.
- 'A' Train RHR is in service with 'B' Train RHR in standby.
- The following alarms are received:
  - EC5 - RCS LVL HI-LO
  - BE5 - BOP PANELS ALARM
  - LE2 - (BOP) 1A RHR PUMP RM SUMP LVL HI-HI OR TRBL

The operator observes the following indications:

- RCS level 123'1" and falling.
- Both 1A RHR pump room sump pumps running.
- 1A RHR pump flow, amps, and discharge pressure are stable.

Which ONE of the following is the sequence of actions that will be performed next?

A. Trip 1A RHR pump
Verify RCS level is ≥ 123'3"
Start the B Train RHR
Vent the A Train RHR

B. Trip 1A RHR pump
Isolate 'A' Train RHR
Verify RCS level is ≥ 123'3"
Start the 'B' Train RHR

C. Trip 1A RHR pump
Fill the RCS
Fill all SG(s)
Restore at least one train of RHR to normal operation

D. Trip 1A RHR pump
Fill the RCS to 123'6"
Vent the 'A' Train RHR
Restore at least one train of RHR to normal operation

A. Incorrect- this step does not isolate the leak or the on service train prior to starting the other train.

B. Correct - This is correct per AOP-12 in that the pump would be turned off, the valves for that train shut, and then the level checked at an appropriate level to allow starting the other train of RHR.

C. Incorrect- You would not restore the other train w/o first isolating the leak. Also you would check your RCS level prior to starting the other train so it would not cavitate. Filling the SGs will do nothing for you.

D. Incorrect- This does not isolate the leak vents an RHR train that never cavitated.

Ability to determine and interpret the following as they apply to the Loss of Residual Heat Removal System: Location and isolability of leaks

Question Number: 78

Tier 1 Group 1

Importance Rating: SRO 3.6

Technical Reference: AOP-12.0
Proposed references to be provided to applicants during examination: None
Learning Objective:
10 CFR Part 55 Content: 43.5

Comments:

Source :	BANK	Source if Bank:	
Cognitive Level:	HIGHER	Difficulty:	
Job Position:	SRO	Plant:	FARLEY
Date:	10/2007	Previous NRC?:	NO

Step	Action/Expected Response	Response NOT Obtained

****

CAUTION: Filling the pressurizer to 100% will cause a loss of nozzle dams due to the head of water.

****

NOTE: RCS to RHR loop suction valves will be deenergized if RCS TAVG is less than 180°F.

Step	Action/Expected Response	Response NOT Obtained
___ 1	**Check RHR loop suction valves - OPEN.**	1 Stop any RHR PUMP with closed loop suction valves. 1.1 IF required, THEN adjust charging flow to maintain RCS level.

RHR PUMP	1A	1B
1C(1A) RCS LOOP TO 1A(1B) RHR PUMP Q2E11MOV	[] 8701A [] 8701B	[] 8702A [] 8702B
1C(1A) RCS LOOP TO 1A(1B) RHR PUMP LOOP SUCTION POWER SUPPLY BREAKERS CLOSED(IF REQUIRED)	[] FU-T5 [] FV-V2	[] FU-G2 [] FV-V3

Step	Action/Expected Response	Response NOT Obtained
___ 2	**Check at least one RHR PUMP - STARTED.**	2 Proceed to step 8.0.

___Page Completed

Step	Action/Expected Response	Response NOT Obtained
NOTE: Rapid flow adjustments may cause more severe pump cavitation.		
___ 3	**Check RHR PUMPs - NOT CAVITATING.** The following parameters should be stable and within normal ranges. [] RHR flow rate within the Acceptable Operating Region of FIGURE 1. [] Discharge pressure [] Suction pressure [] RHR motor ammeter readings [] No unusual pump noise	3 Perform the following. 3.1 Slowly, reduce RHR flow rate to eliminate cavitation. 3.2 <u>IF</u> cavitation <u>NOT</u> eliminated, <u>THEN</u> perform the following: 3.2.1 Stop the affected RHR pump(s) 3.2.2 <u>IF</u> no RHR pumps are running, <u>THEN</u> proceed to step 8.0. 3.3 <u>IF</u> RHR flow is less than 3000 gpm, <u>THEN</u> refer to Technical Specifications 3.9.4 and 3.9.5 for applicability.

___Page Completed

Step	Action/Expected Response	Response NOT Obtained

****

CAUTION: Indicated RCS level will rise approximately 1 ft for every 0.5 psi rise in RCS pressure if the indication is not pressure compensated.

****

****

CAUTION: Only borated water should be added to the RCS to maintain adequate shutdown margin.

****

___ 4 **Check RCS level ADEQUATE**

4.1 Compare any available level indications.

[] LT 2965A&B/level hose
[] LI-2384 2B LOOP RCS NR LVL
[] LI-2385 2C LOOP RCS NR LVL
[] Temporary remote level indicator off of a RCS FT on A or C loop

4.2 Check RCS level within the Acceptable Operating Region of FIGURE 1.

4.2 Raise RCS level.

4.2.1 Notify personnel in containment that RCS level will be raised.

4.2.2 Align Technical Requirements Manual boration flow path.

4.2.3 Raise RCS level to within the Acceptable Operating Region of FIGURE 1 for the existing RHR flow.

4.2.4 IF RCS level NOT maintained within the Acceptable Operating Region of FIGURE 1, THEN verify RHR PUMP(s) stopped AND proceed to step 8.0.

Step 4 continued on next page.

___Page Completed

Step	Action/Expected Response	Response NOT Obtained
	4.3 Maintain RCS level within the following limits: [] Maintain RCS level less than 123 ft 4 in if personnel are in the channel heads without nozzle dams installed. [] Maintain RCS level less than 123 ft 9 in if primary manways are removed without nozzle dams installed. [] Maintain RCS level less than 123 ft 9 in if seal injection is not established and RCPs are not backseated. [] Maintain RCS level less than 124 ft if safety injection check valves are disassembled.	

____Page Completed

Step	Action/Expected Response	Response NOT Obtained

****

CAUTION: IF the leaking RHR train can NOT be identified, THEN both trains should be assumed leaking.

****

____ 5	**Check RHR system - NOT LEAKING.** [] Stable RCS level. [] No unexpected rise in containment sump level. [] No RHR HX room sump level rising. [] No RHR pump room sump level rising. [] No rising area radiation monitor	5 Isolate RHR leakage. 5.1 Isolate affected RHR train(s) from RCS. 5.1.1 Stop affected RHR pump(s). 5.1.2 Verify closed affected RHR train valves.

Affected RHR Train	A	B
1C(1A) RCS LOOP TO 1A(1B) RHR PUMP Q2E11MOV	[] 8701A [] 8701B	[] 8702A [] 8702B
1C(1A) RCS LOOP TO 1A(1B) RHR PUMP LOOP SUCTION POWER SUPPLY BREAKERS CLOSED	[] FU-T5 [] FV-V2	[] FU-G2 [] FV-V3
1A(1B) RHR HX TO RCS COLD LEGS ISO Q2E11MOV	[] 8888A	[] 8888B
1A(1B) RHR TO RCS HOT LEGS XCON Q2E11MOV	[] 8887A	[] 8887B

5.2 Isolate source of any RHR/RCS leakage.

____Page Completed

Step	Action/Expected Response	Response NOT Obtained
___ 6	**Check at least one RHR train - IN OPERATION.**	6 Proceed to step 8.0.
	6.1 Determine RHR train that low pressure letdown is aligned.	
	6.2 <u>IF</u> required, <u>THEN</u> align low pressure letdown to the operating RHR train.	
___ 7	**Go to procedure and step in effect.**	
___ 8	**Monitor time to core saturation.**	
	8.1 Check time to core saturation from the current Shutdown Safety Assessment.	8.1 Use ATTACHMENT 3 to determine time to core saturation. <u>OR</u> Monitor any available core exit thermocouples for a heat up trend.

Step 8 continued on next page.

___Page Completed

FIGURE 1

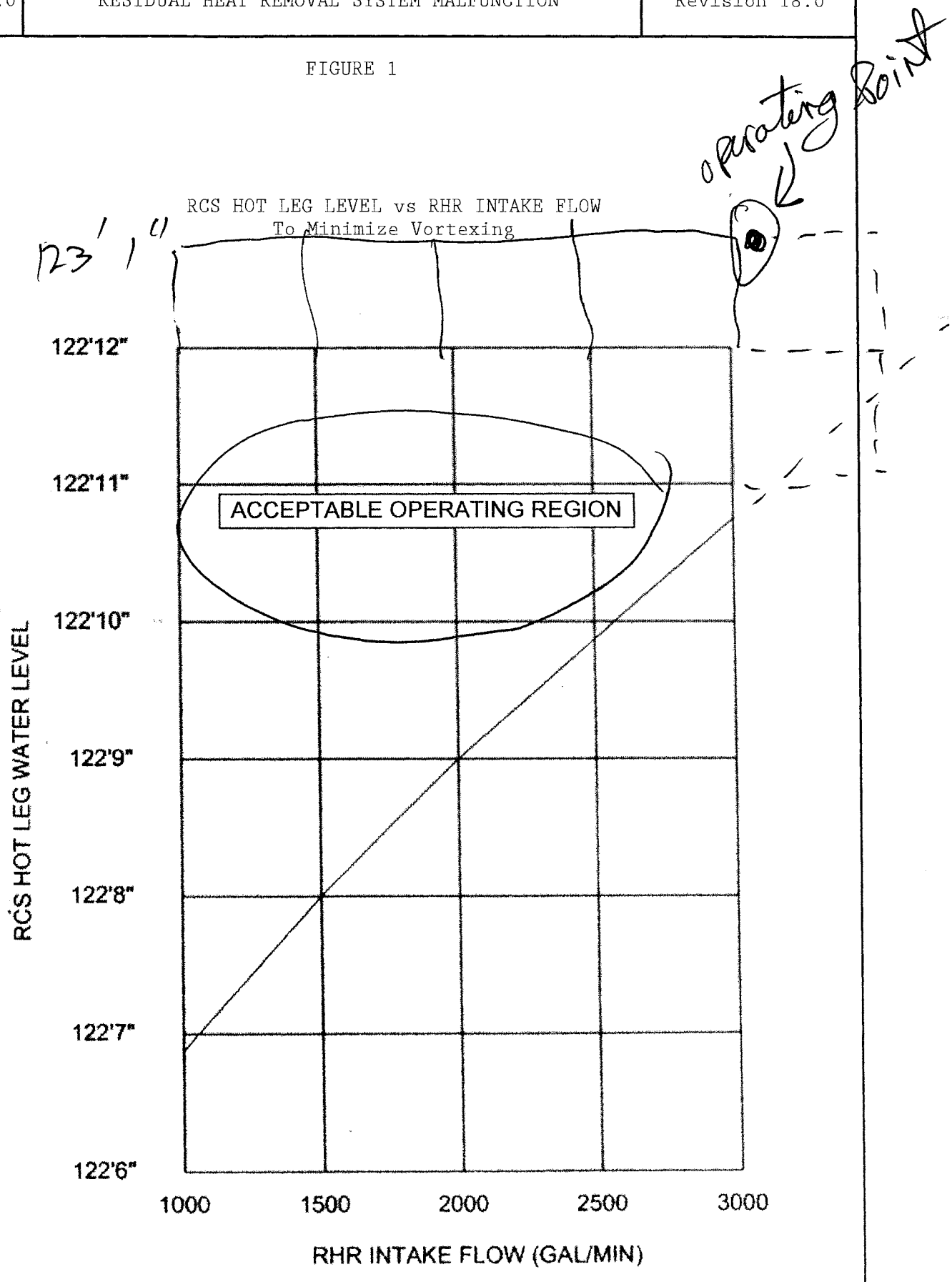
operating Point
RCS HOT LEG LEVEL vs RHR INTAKE FLOW
To Minimize Vortexing
123' 1"
122'12"
122'11"
122'10"
122'9"
122'8"
122'7"
122'6"
ACCEPTABLE OPERATING REGION
RCS HOT LEG WATER LEVEL
1000
1500
2000
2500
3000
RHR INTAKE FLOW (GAL/MIN)

32. 025 AK2.03 002/NEW//HIGHER//RO/FARLEY/11/2007/NO

Given the following:

- Unit 1 is in Mode 5.
- A Train CCW is the on service train.
- B CCW pump is Tagged Out.
- C CCW pump just tripped on OC.
- A Train RHR is in service in the cooldown alignment.
- B Train RHR is in standby alignment
- Annunciator CG1, 1A RHR PUMP CCW FLOW LO is in alarm.
- CCW Surge Tank level is 44 inches and stable.
- The crew is performing AOP-9.0, LOSS OF COMPONENT COOLING WATER.

Which ONE of the following describes the actions required per AOP-9.0 & AOP-12.0, RESIDUAL HEAT REMOVAL SYSTEM MALFUNCTION?

A. Perform AOP-12.0 instead of AOP-9.0, start any charging pump, establish any RCS bleed path.

B. Perform AOP-12.0 instead of AOP-9.0, restore A train RHR cooling while monitoring core exit thermocouples.

C. Perform AOP-12.0 in conjunction with AOP-9.0, establish RCS heat removal via SGs.

D. Perform AOP-12.0 in conjunction with AOP-9.0, start A CCW pump and place B Train RHR in service.

A. Incorrect. Plausible because core cooling is a high priority, and there are several alternative methods of core cooling in AOP-12.0 other than RHR which requires CCW.

B. Incorrect. Plausible for same reason as A.

C. Incorrect. In accordance with procedure standby train should be operated before this method of heat removal is implemented.

D is correct in accordance with procedure. A train CCW & A train RHR would be unavailable.

AOP-9.0 APP. 3 directs train swap of B CCW PUMP mechanically and electrically in parallel. Note says that when electrical is complete, start pump.

Knowledge of the interrelations between the Loss of Residual Heat Removal System and the following: Service water or closed cooling water pumps

Question Number: 43

Tier 1 Group 1

Importance Rating: RO 2.7

Technical Reference: AOP-9.0, AOP-12.0
Proposed references to be provided to applicants during examination: None
Learning Objective:
10 CFR Part 55 Content: 41.10

Comments:

Source :	NEW	Source if Bank:	
Cognitive Level:	HIGHER	Difficulty:	
Job Position:	RO	Plant:	FARLEY
Date:	11/2007	Previous NRC?:	NO

Step	Action/Expected Response	Response NOT Obtained
		3.6 IF CCW cooling to a running RHR pump is inadequate, THEN perform the following. 3.6.1 Stop the affected RHR pump. 3.6.2 IF in Mode 5 or 6 perform FNP-1-AOP-12.0, RESIDUAL HEAT REMOVAL SYSTEM MALFUNCTION, in conjunction with this procedure.
NOTE:	The ON SERVICE train includes the miscellaneous header and associated train header.	
___ 4	**Verify SW supplied to the affected train.** SW flow from 1A,1B, or 1C CCW heat exchanger [] Q1P16FI3009AA 1A CCW HX DISC [] Q1P16FI3009BA 1B CCW HX DISC [] Q1P16FI3009CA 1C CCW HX DISC	4 IF Service Water is not available, THEN peform the following in conjunction with FNP-1-AOP-10, LOSS OF SERVICE WATER. 4.1 Check the following conditions met. [] Check if affected train is the ON SERVICE train. [] Unaffected train has adequate SW available. [] No CCW leak exists 4.2 IF conditions of Step 4.1 met, THEN swap ON SERVICE trains per FNP-1-SOP-23.0B or FNP-1-SOP-23.0C.
NOTE:	IF previous actions have restored the ON SERVICE train, THEN the ON SERVICE train should no longer be considered affected.	
___ 5	**Check ON SERVICE train affected.**	5 Go to step 10.0

___Page Completed

Step	Action/Expected Response	Response NOT Obtained
___10	Check both RHR pumps stopped	10 <u>IF</u> CCW cooling to a running RHR pump is inadequate <u>THEN</u> perform the following: 10.1 Stop the affected RHR pump. 10.2 <u>IF</u> in modes 5 or 6 <u>THEN</u> perform FNP-1-AOP-12.0, RESIDUAL HEAT REMOVAL SYSTEM MALFUNCTION, in conjunction with this procedure.
___11	Evaluate event classification and notification requirements using FNP-0-EIP-8, NON-EMERGENCY NOTIFICATIONS <u>AND</u> FNP-0-EIP-9, EMERGENCY CLASSIFICATION <u>AND</u> ACTIONS.	
___12	Check SFP cooling aligned to an operating CCW train.	12 Align SFP cooling to non affected train using FNP-1-SOP-23.0, COMPONENT COOLING WATER SYSTEM.
___13	Check on service CCW train operating.	13 Determine actions required to restore an ON SERVICE Train.
___14	Go to procedure and step in effect.	

-END-

Step	Action/Expected Response	Response NOT Obtained

****

CAUTION: Filling the pressurizer to 100% will cause a loss of nozzle dams due to the head of water.

****

NOTE: RCS to RHR loop suction valves will be deenergized if RCS TAVG is less than 180°F.

___ 1 **Check RHR loop suction valves - OPEN.**

RHR PUMP 1C(1A) RCS LOOP TO 1A(1B) RHR PUMP Q2E11MOV	1A [] 8701A [] 8701B	1B [] 8702A [] 8702B
1C(1A) RCS LOOP TO 1A(1B) RHR PUMP LOOP SUCTION POWER SUPPLY BREAKERS CLOSED(IF REQUIRED)	[] FU-T5 [] FV-V2	[] FU-G2 [] FV-V3

1 Stop any RHR PUMP with closed loop suction valves.

1.1 IF required, THEN adjust charging flow to maintain RCS level.

___ 2 **Check at least one RHR PUMP - STARTED.**

2 Proceed to step 8.0.

___Page Completed

Step	Action/Expected Response	Response NOT Obtained
___ 6	**Check at least one RHR train - IN OPERATION.**	6 Proceed to step 8.0.
	6.1 Determine RHR train that low pressure letdown is aligned.	
	6.2 <u>IF</u> required, <u>THEN</u> align low pressure letdown to the operating RHR train.	
___ 7	**Go to procedure and step in effect.**	
___ 8	**Monitor time to core saturation.**	
	8.1 Check time to core saturation from the current Shutdown Safety Assessment.	8.1 Use ATTACHMENT 3 to determine time to core saturation. <u>OR</u> Monitor any available core exit thermocouples for a heat up trend.

Step 8 continued on next page.

___Page Completed

Step	Action/Expected Response	Response NOT Obtained
	8.2 Monitor RCS temperature trend during the performance of this procedure.	
	8.2.1 Check vacuum degas system NOT in service.	8.2.1 IF vacuum refill in progress maintaining a vacuum on the RCS, THEN break vacuum on the RCS using FNP-0-SOP-74.0, OPERATION OF THE RCVRS SKID. (155' CTMT)

NOTE: Step 8.2.2 is a continuing action step.

	8.2.2 IF RCS level decreases to less than 121 ft 11 in AND core exit T/Cs are greater than 200°F, THEN proceed to step 15.0.	
	8.3 IF applicable, THEN review the current shutdown safety assessment of FNP-0-UOP-4.0 for applicability of other outage Abnormal Operating Procedures.	
___ 9	**Begin venting any RHR trains which have experienced evidence of cavitation using ATTACHMENT 1.**	
___10	**Suspend any boron dilution in progress. (IN 91-54)**	

___Page Completed

Step	Action/Expected Response	Response NOT Obtained

****

CAUTION: Filling the pressurizer to 100% will cause a loss of nozzle dams due to the head of water.

****

NOTE: RCS to RHR loop suction valves will be deenergized if RCS TAVG is less than 180°F.

___ 1 **Check RHR loop suction valves - OPEN.**

RHR PUMP 1C(1A) RCS LOOP TO 1A(1B) RHR PUMP Q2E11MOV	1A	1B
	[] 8701A [] 8701B	[] 8702A [] 8702B
1C(1A) RCS LOOP TO 1A(1B) RHR PUMP LOOP SUCTION POWER SUPPLY BREAKERS CLOSED(IF REQUIRED)	[] FU-T5 [] FV-V2	[] FU-G2 [] FV-V3

1 Stop any RHR PUMP with closed loop suction valves.

1.1 IF required, THEN adjust charging flow to maintain RCS level.

___ 2 **Check at least one RHR PUMP - STARTED.**

2 Proceed to step 8.0.

___Page Completed

Step	Action/Expected Response	Response NOT Obtained
	NOTE: Rapid flow adjustments may cause more severe pump cavitation.	
___ 3	**Check RHR PUMPs - NOT CAVITATING.** The following parameters should be stable and within normal ranges. [] RHR flow rate within the Acceptable Operating Region of FIGURE 1. [] Discharge pressure [] Suction pressure [] RHR motor ammeter readings [] No unusual pump noise	3 Perform the following. 3.1 Slowly, reduce RHR flow rate to eliminate cavitation. 3.2 <u>IF</u> cavitation <u>NOT</u> eliminated, <u>THEN</u> perform the following: 3.2.1 Stop the affected RHR pump(s) 3.2.2 <u>IF</u> no RHR pumps are running, <u>THEN</u> proceed to step 8.0. 3.3 <u>IF</u> RHR flow is less than 3000 gpm, <u>THEN</u> refer to Technical Specifications 3.9.4 and 3.9.5 for applicability.

___Page Completed

Step	Action/Expected Response	Response NOT Obtained

****

CAUTION: Indicated RCS level will rise approximately 1 ft for every 0.5 psi rise in RCS pressure if the indication is not pressure compensated.

****

****

CAUTION: Only borated water should be added to the RCS to maintain adequate shutdown margin.

****

___ **4 Check RCS level ADEQUATE**

4.1 Compare any available level indications.

[] LT 2965A&B/level hose
[] LI-2384 2B LOOP RCS NR LVL
[] LI-2385 2C LOOP RCS NR LVL
[] Temporary remote level indicator off of a RCS FT on A or C loop

4.2 Check RCS level within the Acceptable Operating Region of FIGURE 1.

4.2 Raise RCS level.

4.2.1 Notify personnel in containment that RCS level will be raised.

4.2.2 Align Technical Requirements Manual boration flow path.

4.2.3 Raise RCS level to within the Acceptable Operating Region of FIGURE 1 for the existing RHR flow.

4.2.4 IF RCS level NOT maintained within the Acceptable Operating Region of FIGURE 1, THEN verify RHR PUMP(s) stopped AND proceed to step 8.0.

Step 4 continued on next page.

___Page Completed

Step	Action/Expected Response	Response NOT Obtained
	4.3 Maintain RCS level within the following limits: [] Maintain RCS level less than 123 ft 4 in if personnel are in the channel heads without nozzle dams installed. [] Maintain RCS level less than 123 ft 9 in if primary manways are removed without nozzle dams installed. [] Maintain RCS level less than 123 ft 9 in if seal injection is not established and RCPs are not backseated. [] Maintain RCS level less than 124 ft if safety injection check valves are disassembled.	

____Page Completed

Step	Action/Expected Response	Response NOT Obtained

****

CAUTION: IF the leaking RHR train can NOT be identified, THEN both trains should be assumed leaking.

****

___ 5	**Check RHR system - NOT LEAKING.** [] Stable RCS level. [] No unexpected rise in containment sump level. [] No RHR HX room sump level rising. [] No RHR pump room sump level rising. [] No rising area radiation monitor	5 Isolate RHR leakage. 5.1 Isolate affected RHR train(s) from RCS. 5.1.1 Stop affected RHR pump(s). 5.1.2 Verify closed affected RHR train valves. 5.2 Isolate source of any RHR/RCS leakage.

Affected RHR Train	A	B
1C(1A) RCS LOOP TO 1A(1B) RHR PUMP Q2E11MOV	[] 8701A [] 8701B	[] 8702A [] 8702B
1C(1A) RCS LOOP TO 1A(1B) RHR PUMP LOOP SUCTION POWER SUPPLY BREAKERS CLOSED	[] FU-T5 [] FV-V2	[] FU-G2 [] FV-V3
1A(1B) RHR HX TO RCS COLD LEGS ISO Q2E11MOV	[] 8888A	[] 8888B
1A(1B) RHR TO RCS HOT LEGS XCON Q2E11MOV	[] 8887A	[] 8887B

___Page Completed

Step	Action/Expected Response	Response NOT Obtained
___ 6	**Check at least one RHR train - IN OPERATION.**	6 Proceed to step 8.0.
	6.1 Determine RHR train that low pressure letdown is aligned.	
	6.2 <u>IF</u> required, <u>THEN</u> align low pressure letdown to the operating RHR train.	
___ 7	**Go to procedure and step in effect.**	
___ 8	**Monitor time to core saturation.**	
	8.1 Check time to core saturation from the current Shutdown Safety Assessment.	8.1 Use ATTACHMENT 3 to determine time to core saturation. <u>OR</u> Monitor any available core exit thermocouples for a heat up trend.

Step 8 continued on next page.

___Page Completed

Step	Action/Expected Response	Response NOT Obtained
	8.2 Monitor RCS temperature trend during the performance of this procedure.	
	8.2.1 Check vacuum degas system NOT in service.	8.2.1 IF vacuum refill in progress maintaining a vacuum on the RCS, THEN break vacuum on the RCS using FNP-0-SOP-74.0, OPERATION OF THE RCVRS SKID. (155' CTMT)

NOTE: Step 8.2.2 is a continuing action step.

8.2.2 IF RCS level decreases to less than 121 ft 11 in AND core exit T/Cs are greater than 200°F, THEN proceed to step 15.0.

8.3 IF applicable, THEN review the current shutdown safety assessment of FNP-0-UOP-4.0 for applicability of other outage Abnormal Operating Procedures.

___ 9 **Begin venting any RHR trains which have experienced evidence of cavitation using ATTACHMENT 1.** NA

___10 **Suspend any boron dilution in progress. (IN 91-54)**

___Page Completed

Step	Action/Expected Response	Response NOT Obtained
___11	**IF the charging system is still in service, THEN align the RWST to the running Charging pump.**	

Operable CHG PUMP RWST TO CHG PUMP Q1E21LCV	1A	1B(A TRN)	1B(B TRN)	1C
	[] 115B	[] 115B	[] 115D	[] 115D

****

CAUTION: The RCS tygon level hose and LT 2965A&B utilize the same level tap. These are not independent indications.

****

12 Check for two independent RCS level indications.

___ 12.1 Compare available level indications.

[] LT 2965A&B/level hose
[] LI-2384 2B LOOP RCS NR LVL
[] LI-2385 2C LOOP RCS NR LVL
[] Temporary remote level indicator off of a RCS FT on A or C loop

12.2 Check RCS level greater than 123 ft 3 in.

12.2 Raise RCS level.

12.2.1 Notify personnel in containment that RCS level will be raised.

12.2.2 Align Technical Requirements Manual boration flow path.

12.2.3 Raise RCS level to greater than 123 ft 3 in.

Step 12 continued on next page.

___Page Completed

Step	Action/Expected Response	Response NOT Obtained
	12.3 Maintain RCS level within the following limits: [] Maintain RCS level less than 123 ft 4 in if personnel are in the channel heads without nozzle dams installed. [] Maintain RCS level less than 123 ft 9 in if primary manways are removed without nozzle dams installed. [] Maintain RCS level less than 123 ft 9 in if seal injection is not established and RCPs are not backseated. [] Maintain RCS level less than 124 ft if safety injection check valves are disassembled.	

****

CAUTION: The standby RHR train may be lost due to cavitation if it is placed in service without adequate RCS level.

****

****

CAUTION: Starting an RHR PUMP may cause RCS level to fall due to shrink or void collapse.

****

NOTE: The term "standby RHR train" refers to the train most readily available to restore RHR cooling.

13	**WHEN RCS level greater than 123 ft 3 in, THEN place standby RHR train in service.** 13.1 Verify CCW PUMP in standby train - STARTED.	13	IF unable to establish at least one train of RHR, THEN proceed to step 15 while continuing efforts to restore at least one train of RHR.

Step 13 continued on next page.

____Page Completed

Step	Action/Expected Response	Response NOT Obtained

13.2 Verify CCW - ALIGNED TO STANDBY RHR HEAT EXCHANGER.

Standby RHR Train	A	B
CCW TO 1A(1B) RHR HX Q1P17MOV	[] 3185A	[] 3185B

13.3 Verify the following conditions satisfied.

13.3.1 RWST TO 1A(1B) RHR PUMP Q1E11MOV8809A and B closed.

13.3.2 1A(1B) RHR HX TO CHG PUMP SUCT Q1E11MOV8706A and B closed.

13.3.3 RCS pressure less than 402.5 psig.

13.3.4 PRZR vapor space temperature less than 475°F.

Step 13 continued on next page.

____Page Completed

Step	Action/Expected Response	Response NOT Obtained

NOTE: RCS to RHR loop suction valves will be deenergized if RCS TAVG is less than 180°F.

13.4 Verify standby RHR train loop suction valves - OPEN.

Standby RHR Train	A	B
1C(1A) RCS LOOP to 1A(1B) RHR PUMP Q2E11MOV	[] 8701A [] 8701B	[] 8702A [] 8702B
1C(1A) RCS LOOP TO 1A(1B) RHR PUMP LOOP SUCTION POWER SUPPLY BREAKERS CLOSE(IF REQUIRED)	[] FU-T5 [] FV-V2	[] FU-G2 [] FV-V3

Step 13 continued on next page.

____Page Completed

Step	Action/Expected Response	Response NOT Obtained

13.5 Check standby RHR train discharge flow path available.

13.5.1 Verify standby RHR train - ALIGNED TO RCS COLD LEGS.

RHR Train	2A	2B
RHR HX TO RCS COLD LEGS ISO Q2E11MOV—OPEN	[] 8888A	[] 8888B

NOTE: The RHR HX bypass valves will fail closed and the RHR HX discharge valves will fail open upon loss of air to the AUX BLDG.

13.5.2 Verify standby RHR train HX BYP FLOW - ADJUSTED TO 15% OPEN.

Standby RHR Train	A	B
1A(1B) RHR HX BYP FLOW FK	[] 605A	[] 605B

13.5.3 Verify standby RHR train HX discharge valve - ADJUSTED CLOSED.

Standby RHR Train	A	B
1A(1B) RHR HX TO RCS DISCH VLV HIK	[] 603A	[] 603B

13.5.3 Close standby RHR train - TO RCS COLD LEGS ISO valves. (121 ft, AUX BLDG piping penetration room)

RHR Train	2A	2B
RHR HX TO RCS COLD LEGS ISO Q2E11MOV	[] 8888A	[] 8888B

Step 13 continued on next page.

____Page Completed

Step	Action/Expected Response	Response NOT Obtained

13.6 Verify standby RHR train pump miniflow valve - OPEN.

Standby RHR Train	A	B
1A(1B) RHR PUMP MINIFLOW Q1E11FCV	[] 602A	[] 602B

13.7 Start RHR PUMP in standby train.

13.8 Control standby RHR train RHR HX bypass valve to obtain desired flow.

Standby RHR Train	A	B
1A(1B) RHR HX BYP FLOW FK	[] 605A	[] 605B

13.8 IF unable to control standby RHR train flow with RHR HX bypass valve, THEN locally control RHR HX TO RCS COLD LEGS ISO valves. (121 ft, AUX BLDG piping penetration room)

RHR Train	2A	2B
RHR HX TO RCS COLD LEGS ISO Q2E11MOV	[] 8888A	[] 8888B

____14 **IF RHR restored, THEN go to procedure and step in effect.**

14 Continue efforts to restore at least one RHR train while continuing with this procedure.

____Page Completed

Step	Action/Expected Response	Response NOT Obtained
___15	**Initiate protective measures for personnel in containment.**	
	15.1 Evacuate all nonessential personnel from containment.	
	15.2 Ensure HP monitors essential personnel remaining in containment for the following: [] Changing containment conditions which could require evacuation of all personnel. [] Use of extra protective clothing if needed. [] Use of respirators if needed.	
	15.3 Monitor containment radiation monitors for changing conditions. [] R-2 CTMT 155 ft [] R-7 SEAL TABLE [] R-27A CTMT HIGH RANGE (BOP) [] R-27B CTMT HIGH RANGE (BOP)	

****

CAUTION: Containment closure is required to be completed within 2 hours of the initiating event unless an operable RHR pump is placed in service cooling the RCS and the RCS temperature is below 180 F.

****

16	**WHEN RCS level less than 126 ft 6 in, THEN establish containment closure using FNP-1-STP-18.4, CONTAINMENT MID-LOOP AND/OR REFUELING INTEGRITY VERIFICATION AND CONTAINMENT CLOSURE.**	16 IF in mode 6, THEN refer to Technical Specifications 3.9.4 and 3.9.5 for other containment isolation requirements.

____Page Completed

Step	Action/Expected Response	Response NOT Obtained
___17	**Start all available containment coolers**	
___ 17.1	Determine which containment coolers have Service Water aligned. [] Q1E12H001A [] Q1E12H001B [] Q1E12H001C [] Q1E12H001D	
17.2	Start Containment coolers with service water aligned and with power available in FAST speed. [] 1A CTMT CLR FAN FAST SPEED Q1E12H001A to START (BKR EA10) [] 1B CTMT CLR FAN FAST SPEED Q1E12H001B to START (BKR EB05) [] 1C CTMT CLR FAN FAST SPEED Q1E12H001C to START (BKR EB06) [] 1D CTMT CLR FAN FAST SPEED Q1E12H001C to START (BKR EC12)	17.2 Start Containment coolers with service water aligned and with power available in SLOW speed. [] 1A CTMT CLR FAN SLOW SPEED Q1E12H001A to START (BKR ED15) [] 1B CTMT CLR FAN SLOW SPEED Q1E12H001B to START (BKR ED16) [] 1C CTMT CLR FAN SLOW SPEED Q1E12H001C to START (BKR EE08) [] 1D CTMT CLR FAN SLOW SPEED Q1E12H001D to START (BKR EE16)
17.3	Check discharge damper open on any started containment cooler. [] CTMT CLR 1A DISCH 3186A indicates OPEN. [] CTMT CLR 1B DISCH 3186B indicates OPEN. [] CTMT CLR 1C DISCH 3186C indicates OPEN. [] CTMT CLR 1D DISCH 3186d indicates OPEN.	17.3 STOP any containment cooler whose discharge damper fails to indicate OPEN.
___18	**<u>IF</u> not previously started, <u>THEN</u> begin venting any RHR train(s) which have experienced evidence of cavitation using ATTACHMENT 1.**	

___Page Completed

Step	Action/Expected Response	Response NOT Obtained
NOTE:	Steps 19.0 and 20.0 should be performed in conjunction with the remainder of this procedure.	
___19	**Check SGs available.** • Check SG primary nozzle dams - REMOVED. • Check SG primary manways - INSTALLED. • Check SG secondary handhole covers - INSTALLED.	19 Proceed to step 21.
NOTE:	Establishing a secondary heat sink will reduce RCS heat up and pressurization rate to provide more time for recovery actions.	
___20	**Verify secondary heat sink established.** 20.1 Maintain wide range level in all available SGs greater than 75% using FNP-1-SOP-22.0, AUXILIARY FEEDWATER SYSTEM. 20.2 IF SG steam space intact, THEN open atmospheric relief valves to prevent SG pressurization. 1A(1B,1C) MS ATMOS REL VLV [] PC 3371A adjusted [] PC 3371B adjusted [] PC 3371C adjusted 20.3 IF SGBD system available, AND AFW system available, THEN establish blowdown from available SGs using FNP-1-SOP-16.3, STEAM GENERATOR FILLING AND DRAINING.	

___Page Completed

Step	Action/Expected Response	Response NOT Obtained

NOTE:
- Step 3.0 is a continuing action step.
- IF RCP motor bearing temperatures exceed 195°F, THEN the ON SERVICE train is affected.
- Adequate CCW flow means sufficient cooling is available to maintain acceptable temperatures.(i.e. charging pumps,RHR cooling, SFP cooling, RCP's etc.)
- Indications of pump cavitation are: Abnormal CCW flow oscillations or cavitation noise reported at the pump.

___ 3	**Check CCW system adequate for continued plant support.** • Check CCW flow adequate in affected train. • Check RCP motor bearing temperatures less than 195°F. • Check CCW pump not cavitating. Stop any cavitating CCW pump. • CCW Surge tank level being maintained at or above 13 inches.	3 Perform the following: 3.1 IF the ON SERVICE train is affected THEN perform the following: 3.1.1 IF the reactor is critical THEN trip the reactor and perform, FNP-1-EEP-0.0, REACTOR TRIP OR SAFETY INJECTION, while continuing with this procedure. 3.1.2 Verify all Reactor Coolant pumps stopped. 3.1.3 IF in Mode 3 or 4, THEN perform FNP-1-AOP-4.0 while continuing with procedure.

NOTE: Indications of CCW pump cavitation will be abnormal CCW flow oscillations or cavitation noise reported at the pump.

3.2 IF evidence of CCW pump cavitation exists, THEN stop affected CCW pump.

Step 3 continued on next page.

___Page Completed

Step	Action/Expected Response	Response NOT Obtained
		3.3 IF CCW cooling lost to running charging pump, THEN perform the following: 3.3.1 Verify CCW pump started in the non affected train. 3.3.2 IF CCW pump running in non affected train, THEN start charging pump in non affected train. 3.3.3 IF charging pump started in non affected train, THEN stop charging pump in affected train.

****

CAUTION: IF seal injection is in service, THEN at least one charging pump must be maintained to support RCP's.

****

NOTE: IF necessary to swap train alignment for the 1B charging pump for continued support of plant operations, THEN it is desirable to have separate operators performing the electrical and mechanical alignments simultaneously.

		3.4 IF required to establish an operable charging pump in the non affected train, THEN shift the B charging pump to the non affected train per FNP-1-SOP 2.1B or FNP-1-SOP-2.1C. 3.5 IF CCW is NOT available to support charging operation, THEN align fire water using ATTACHMENT 1.

Step 3 continued on next page.

____Page Completed

Step	Action/Expected Response	Response NOT Obtained
		3.6 IF CCW cooling to a running RHR pump is inadequate, THEN perform the following. 3.6.1 Stop the affected RHR pump. 3.6.2 IF in Mode 5 or 6 perform FNP-1-AOP-12.0, RESIDUAL HEAT REMOVAL SYSTEM MALFUNCTION, in conjunction with this procedure.
NOTE:	The ON SERVICE train includes the miscellaneous header and associated train header.	
___ 4	**Verify SW supplied to the affected train.** SW flow from 1A,1B, or 1C CCW heat exchanger [] Q1P16FI3009AA 1A CCW HX DISC [] Q1P16FI3009BA 1B CCW HX DISC [] Q1P16FI3009CA 1C CCW HX DISC	4 IF Service Water is not available, THEN peform the following in conjunction with FNP-1-AOP-10, LOSS OF SERVICE WATER. 4.1 Check the following conditions met. [] Check if affected train is the ON SERVICE train. [] Unaffected train has adequate SW available. [] No CCW leak exists 4.2 IF conditions of Step 4.1 met, THEN swap ON SERVICE trains per FNP-1-SOP-23.0B or FNP-1-SOP-23.0C.
NOTE:	IF previous actions have restored the ON SERVICE train, THEN the ON SERVICE train should no longer be considered affected.	
___ 5	**Check ON SERVICE train affected.**	5 Go to step 10.0

___Page Completed

Step	Action/Expected Response	Response NOT Obtained
___ 6	**Check the ON SERVICE train intact.**	6 Perform the following: 6.1 IF the miscellaneous header is intact, THEN shift the miscellaneous header to the non-affected train using ATTACHMENTS 2 or 3 depending upon train affected. 6.1.1 WHEN ATTACHMENT 2 or 3 complete, THEN go to step 8.0. 6.2 IF the miscellaneous header is not intact THEN proceed to step 8.0
___ 7	**Check 1A AND 1C CCW pumps AVAILABLE.** 7.1 Shift the Miscellaneous header to the non-affected train using FNP-1-SOP-23.0B OR FNP-1-SOP-23.0C.	7 Shift the Miscellaneous header to the non-affected train using Attachments 2 or 3 AND proceed to step 8.0.
___ 8	**IF both seal injection and CCW are lost to the RCP's THEN isolate the RCP seal cooling**	
	8.1 Verify CCW return from RCP thermal barrier valves CLOSED. [] Q1P17HV3045 Closed [] Q1P17HV3184 Closed	8.1 Locally isolate CCW return [] Q1P17V107(121 PPR)
	8.2 Isolate RCP seal return valves. [] Q1E21MOV8112 Closed [] Q1E21MOV8100 Closed	8.2 Locally isolate seal water return lines(139 ft. rad side filter room) [] SEAL WATER RTN FILTER INLET Q1E21V189A---CLOSED [] SEAL WATER RTM FILTER BYPASS Q1E21V190---CLOSED

Step 8 continued on next page.

___Page Completed

Step	Action/Expected Response	Response NOT Obtained

8.3 Isolate seal injection.

Close seal water injection filter inlet valves(139 ft. rad side filter room)

SEAL WATER INJ FILTER A INLET

[] Q1E21V127A
[] Q1E21V127C

SEAL WATER INJ FILTER B INLET

[] Q1E21V127B
[] Q1E21V127D

NOTE:
- IF it is believed the miscellaneous header will be restored, THEN step 9 actions may be performed as necessary to reduce loads as needed to isolate affected equipment.
- This is a continuing action step.

___ 9 **Perform the following:**

9.1 Secure letdown

9.1.1 Have Chemistry secure the Zinc Addition System per FBP-1-CCP-335.

9.1.2 Manually adjust LP LTDN PRESS PK 145 TO 50%.

9.1.3 Close Letdown Orifice isolation valves

LTDN ORIF ISO 45 GPM

[] Q1E21HV8149A Closed

LTDN ORIF ISO 60 GPM

[] Q1E21HV8149B Closed
[] Q1E21HV8149C Closed

Step 9 continued on next page.

___Page Completed

Step	Action/Expected Response	Response NOT Obtained
9.2	Manually secure charging flow. [] CLOSE FK-122.	
NOTE:	Aligning charging pump suction to the RWST will result in borating the RCS.	
9.3	Align charging pump suction to the RWST. RWST [] Q1E21LCV115B OPEN [] Q1E21LCV115D OPEN VCT [] Q1E21LCV115C CLOSED [] Q1E21LCV115E CLOSED	
9.4	Isolate RCP seal return RCP seal water return line. [] Q1E21MOV8112 CLOSED [] Q1E21MOV8100 CLOSED	9.4 Locally isolate seal water return line.(139' filter room) [] SEAL WATER RTN FILTER INLET Q1E21V189A---CLOSED [] SEAL WATER RTM FILTER BYPASS Q1E21V190---CLOSED
9.5	Verify excess letdown secured EXC LTDN ISO [] Q1E21HV8153 CLOSED [] Q1E21HV8154 CLOSED	
9.6	Verify RCDT in not on recirculation.	
9.7	Verify waste gas system shutdown	
9.8	Inform Chemistry to secure any sampling.	

Step 9 continued on next page.

____Page Completed

Step	Action/Expected Response	Response NOT Obtained

NOTE: Step 3.0 is a continuing action step and the RNO column has guidance for Charging and RHR pumps which may be applicable.

9.9 IF CCW leak is in the miscellaneous header AND cannot be isolated, THEN isolate the Miscellaneous header as follows:

9.9.1 IF the reactor is critical THEN trip the reactor and perform, FNP-1-EEP-0.0, REACTOR TRIP OR SAFETY INJECTION, while continuing with this procedure.

9.9.2 Verify all Reactor Coolant pumps stopped.

9.9.3 IF in Mode 3 or 4, THEN perform FNP-1-AOP-4.0 while continuing with procedure.

9.9.4 Close CCW TO SECONDARY HXS, Q1P17MOV3047(Q1P17V030)

9.9.4 Manually isolate the Miscellaneous header by closing the following valves. (100' CCW HX Room)

[] 1B CCW HX Outlet iso, Q1P17V008B.
[] CCW SUPP HDR XCON, Q1P17V009B
[] CCW SUPP HDR XCON, Q1P17V009C

____Page Completed

Step	Action/Expected Response	Response NOT Obtained
___10	**Check both RHR pumps stopped**	10 <u>IF</u> CCW cooling to a running RHR pump is inadequate <u>THEN</u> perform the following: 10.1 Stop the affected RHR pump. 10.2 <u>IF</u> in modes 5 or 6 <u>THEN</u> perform FNP-1-AOP-12.0, RESIDUAL HEAT REMOVAL SYSTEM MALFUNCTION, in conjunction with this procedure.
___11	**Evaluate event classification and notification requirements using FNP-0-EIP-8, NON-EMERGENCY NOTIFICATIONS <u>AND</u> FNP-0-EIP-9, EMERGENCY CLASSIFICATION <u>AND</u> ACTIONS.**	
___12	**Check SFP cooling aligned to an operating CCW train.**	12 Align SFP cooling to non affected train using FNP-1-SOP-23.0, COMPONENT COOLING WATER SYSTEM.
___13	**Check on service CCW train operating.**	13 Determine actions required to restore an ON SERVICE Train.
___14	**Go to procedure and step in effect.**	

-END-

33. 026 A3.01 004/BANK/FARLEY/HIGHER//RO/FARLEY/10/2007/NO

Given the following:

- Unit 1 was in Mode 5; Unit 2 was at 100% power.
- A dual-unit loss of offsite power has occurred.
- All EDGs have started and tied onto the vital buses.
- Vital load sequencing has been completed.
- EEP-0, "Reactor Trip or Safety Injection" has been entered on Unit 2.

Which ONE of the following describes the response of the Unit 2 containment spray system if an inadvertent Train 'A' only containment spray actuation signal is received while the crew is responding to the reactor trip?

A. Both CS pumps will start, and both pump discharge valves will open.

B. CS pump 2A will start, but neither pump discharge valve will open; CS pump 2B will NOT start.

C. Neither CS pump will start, but 'A' train pump discharge valve will open; 'B' train pump discharge valve will NOT open.

D. CS pump 2A will start, and its pump discharge valve will open; CS pump 2B will NOT start, and its pump discharge valve will NOT open.

A. Incorrect - Neither CS pump will start, due to the LOSP with no SI actuation (pump controls logic diagram), but the Train A inadvertent actuation for containment spray would cause the A train pump discharge MOV to open.

B. Incorrect - The inadvertent Train A containment spray actuation would not cause the 2A spray pump to start for reason given in A above. The A train MOV would open for reasons given in A above. The B Train would be unaffected.

C. Correct - See FSD narative below. ESS loading sequencer requires an SI signal to be present before sequencing on ESS loads. An SI signal has not occurred for this transient.

D. Incorrect - See 2A pump will not start per the FSD narative below.

Containment Spray System FSD A181008

3.1.5.2 *With offsite power available, the "P" signal shall start both CSS pumps. Without offsite power available, the CSS pumps shall start by the diesel generator ESS loading sequencer. Starting will occur at step two of the sequence if the "P" signal is present at that time. If the "P" signal occurs between the completion of step two and step six of the ESS sequence, then starting will occur at the completion of step six of the loading sequence. If the "P" signal occurs after the completion of step six, starting will take place immediately. Automatic starting of the CSS pumps shall not occur unless the pump control switch on the main control board is in the "AUTO" position (References 6.4.001, 6.4.006, 6.4.007, 6.4.008).*

3.6.1.1

These active valves shall open automatically upon receipt of a containment spray actuation signal ("P" signal) from the ESFAS and remain open for the containment spraying function (Reference 6.2.001).

Ability to monitor automatic operation of the CSS, including: Pump starts and correct MOV positioning

Question Number: 15

Tier 2 Group 1

Importance Rating: 4.3

Technical Reference: CS & Cool OPS-52102C
Proposed references to be provided to applicants during examination: None
Learning Objective:
10 CFR Part 55 Content: 41.7

Comments:

Source :	BANK	Source if Bank:	FARLEY
Cognitive Level:	HIGHER	Difficulty:	
Job Position:	RO	Plant:	FARLEY
Date:	10/2007	Previous NRC?:	NO

Cooling water normally discharges through a 10-inch line including MOV-3441A, B, C, and D, which are located inside containment, then through a 6-inch line and MOV-3023A, B, C, and D. On an "S" signal, water also discharges through a 10-inch discharge line through MOV-3024A, B, C, and D, thus increasing the flow through the coolers. These valves are located in the auxiliary building rad side 121' elevation. B train service water inlet and coolers C and D outlet pressures have local indications in 121' piping penetration room. A train indicators are in the BTRS package room (both units). Inlet and outlet flow transmitters provide indication on the MCB and provide a differential flow alarm to detect leakage (Figure 11). The difference in inlet and outlet flow is measured and compared against a setpoint. The setpoint is 300 gpm (+0,-75) for total flow rates < 1980 gpm and it automatically increases to a setpoint of 750 gpm (+0, -30) for total flow rates ≥ 1980gpm. Radiation monitors (RE-20A and B) are provided on the outlet from each containment cooler service water train to detect the release of radioactive service water to the environment. They provide alarm function only refer to RCP-252.2 for setpoint.

OPERATIONS

Instrumentation and Control

The following discusses the major controls associated with the containment spray system and the containment coolers. These controls are found on the MCB, with the exception of the containment cooler service water discharge valves and the containment cooler condensate drain header isolation valves, which are located on the BOP.

Containment Spray Pump to Spray Header Isolation Valves (MOV-8820A and B) (Figure 5)

A three-position (CLOSE/AUTO/OPEN, spring return to AUTO) handswitch controls each valve. In the AUTO position, the valve will automatically open on a containment spray actuation signal ("P" signal). Valve position indication lights are located above the switch.

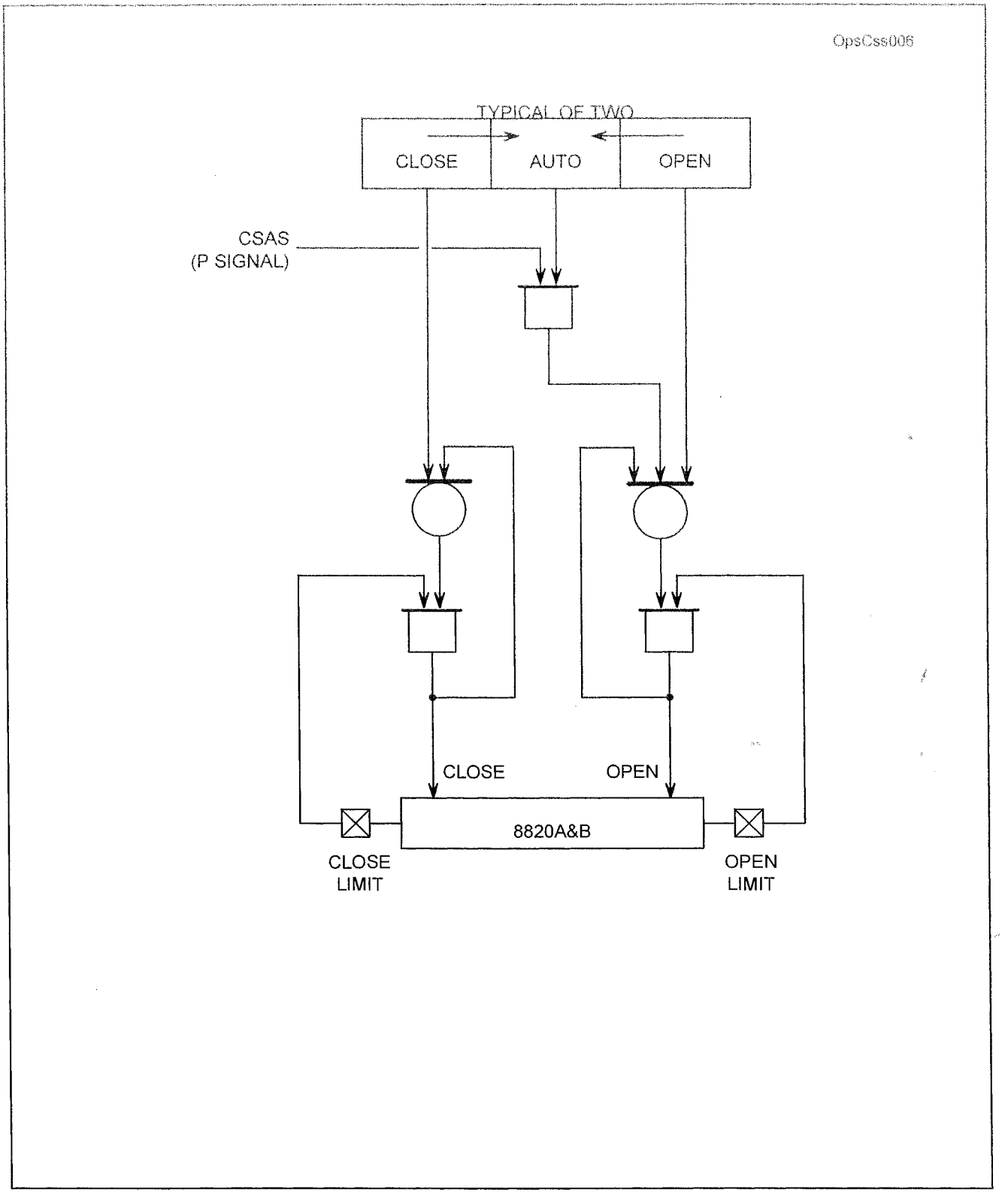

Containment Spray Pump to Spray Header Isolation 8820A(B)

Figure 5

Containment Spray Pumps (Figure 6)

A three-position (STOP/AUTO/START, spring return to AUTO) handswitch controls each pump. Placing the switch in the START position will start the pump. Placing the switch in the STOP position will stop the pump and reset the 86 relay. In the AUTO position, the pump will automatically start upon receipt of a containment spray actuation signal ("P" signal) if an LOSP has not occurred. If an LOSP has occurred with the "P" signal present, a safety injection signal to the ESF sequencer must also be present, or the ESF sequencer must be in test, to start the pump. The load shed signal will automatically stop the pump. The pump will also trip on an over current condition (86 relay). An amber light above the switch indicates this condition. There is also an overload trip alarm on the MCB. See Figure 13. Pump status lights are also located above the switch.

Spray Pump Suction from RWST Isolation Valves (MOV-8817A and B)

Each motor-operated valve is controlled by a three-position (CLOSE/Neutral/OPEN, spring return to Neutral) handswitch. Valve position indication lights are located above each switch.

Containment Spray Pump Sump Suction Isolation Valves (MOV-8826A and B, MOV-8827A and B)

These motor-operated valves operate identically to the spray pump suction isolation valves from the RWST (MOV-8817A and B).

Containment Cooler Fan Slow Speed (Remote) (Figure 7)

A three-position (STOP/AUTO/START, spring return to AUTO) handswitch controls each fan cooler. A two-position (LOCAL/REMOTE) selector switch is associated with each remote handswitch. The associated selector switch must be in REMOTE for the remote handswitch to be OPERABLE. Placing the remote switch in the STOP position will open the slow speed breaker. Placing the switch in START will close the slow speed breaker if the associated fast speed breaker is not closed. In the AUTO position, the slow speed breaker for the

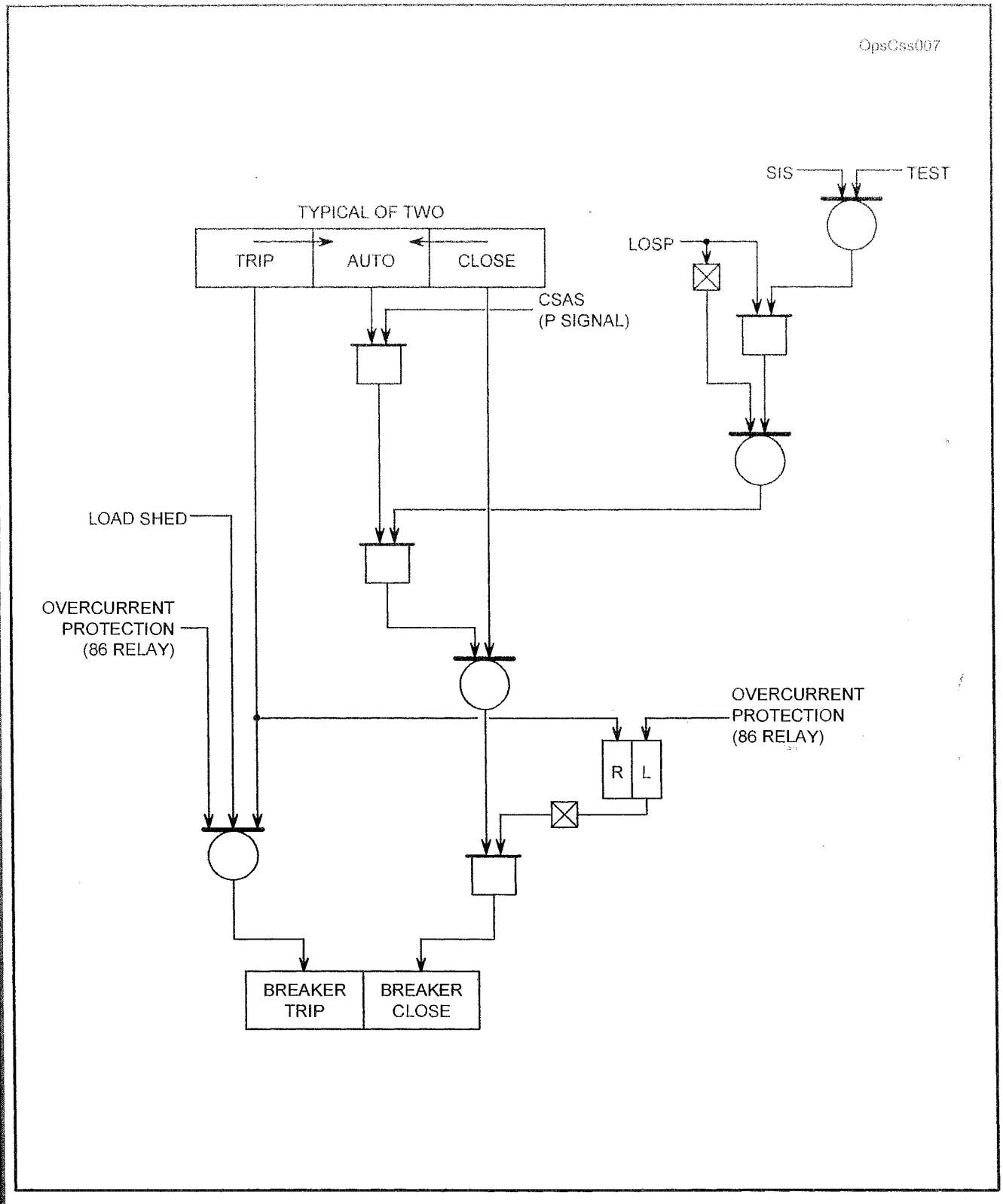

Containment Spray Pump Controls

Figure 6

34. 026 AA1.02 001/BANK/FARLEY/HIGHER//RO/FARLEY/11/2007/YES

Given the following:

- A leak has developed in the 1A RCP thermal barrier heat exchanger.
- "A" Train CCW is the on service train.
- The following alarm is received:

  - AA4 (AB4), CCW SRG TK LVL A (B) TRN HI-LO.

Which ONE of the following lists all the correct alarms, events, and correct sequence that would occur considering only the list below?

Assume no operator action

1. HV-3045, CCW FROM RCP THRM BARR, closes.
2. HV-3184, CCW FROM RCP THRM BARR, closes.
3. DD2, RCP THRM BARR CCW FLOW HI, comes into alarm.
4. DD3, CCW FLOW FROM RCP OIL CLRS LO, comes into alarm.

A. 3- DD2 alarms.
1- HV-3045 closes.
2- HV-3184 closes.

B. 3- DD2 alarms.
2- HV-3184 closes.
1- HV-3045 closes.
4- DD3 alarms.

C. 2- HV-3184 closes.
3- DD2 alarms.
1- HV-3045 closes.

D. 3- DD2 alarms.
1- HV-3045 closes.
2- HV-3184 closes.
4- DD3 alarms.

A. Correct; The CCW leak from the higher pressure RCS source into the CCW system causes CCW tank level to increase (AA4); high flow in the CCW line from the RCS fluid causes DD2 to alarm and HV-3045 to shut, stopping flow; Pressure increases in CCW piping and shuts HV-3184 in order to prevent overpressurization of the CCW system. Pressure and flow are sensed on the thermal barrier CCW discharge line. The pressure sensors (PI-3184A, B, and C) signal HV-3184 to shut when pressure increases to 75 psig. Flow element FE-3045 shuts HV-3045 if the flow increases to 160 gpm.

B. Incorrect; Once HV-3184 is closed flow will no longer be going past FE-3045 therefore, DD2 will not alarm if if had not alarmed prior to the closing of HV-3184 and HV-3045 will not get a close signal.

C. Incorrect; The closing of the HV-3045 and HV-3184 does not affect the flow path through the RCP oil cooler.

D. Incorrect; Once HV-3184 is closed flow will no longer be going past FE-3045 therefore, DD2 will not alarm if if had not alarmed prior to the closing of HV-3184 and HV-3045 will not get a close signal. The closing of the HV-3045 and HV-3184 does not affect the flow path through the RCP oil cooler.

Ability to operate and / or monitor the following as they apply to the Loss of Component Cooling Water: Loads on the CCWS in the control room

Question Number: 44

Tier 1 Group 1

Importance Rating: RO 3.2

Technical Reference: CCW LP OPS-52102G
Proposed references to be provided to applicants during examination: None
Learning Objective:
10 CFR Part 55 Content: 41.5

Comments:

Source :	BANK	Source if Bank:	FARLEY
Cognitive Level:	HIGHER	Difficulty:	
Job Position:	RO	Plant:	FARLEY
Date:	11/2007	Previous NRC?:	YES

Loss of CCW flow to the RCP motor oil coolers will cause high bearing temperatures on any running RCP within approximately two minutes.

In order to prevent overpressurization of the CCW system if a thermal barrier heat exchanger ruptures, pressure and flow are sensed on the thermal barrier CCW discharge line. The pressure sensors (PI-3184A, B, and C) signal HV-3184 to shut when pressure reaches 75 psig. Flow element FE-3045 shuts HV-3045 if the flow reaches 160 gpm. A balance of plant (BOP) annunciator for each valve alarms when instrument air supply pressure to the valve decreases to 40 psig. The CCW piping on the inlet side is protected by a check valve that prevents RCS pressure from reaching the low pressure piping.

CCW piping in containment (CTMT) from the check valve in the supply line to each RCP thermal barrier heat exchanger to downstream of HV-3045 in the combined return line is designed to withstand 2500 psig. Therefore, closure of either HV-3184 or HV-3045 can contain any high pressure reactor coolant leaking to the component cooling water side of the thermal barrier heat exchanger.

SOP-23.0 contains instructions for reopening HV-3045 when a high differential pressure is suspected of preventing reopening the valve after auto-closure (OR 2-99-603). When operating the valve locally, do not use any mechanical leverage on the valve handwheel because damage to the pin which connects the handwheel to the valve stem may result. (OR 2-98-320)

A "P"-signal (phase B containment isolation) will close the five CCW valves associated with the RCPs (MOV-3052, MOV-3046, MOV-3182, HV-3184, and HV-3045). Only one other valve closes on a "P"-signal. That valve is the instrument air to containment valve (HV-3611).

HV-3184 and HV-3045 are air operated valves. They fail closed on loss of air pressure. A solenoid valve, for each air operated valve, energizes to vent the air from the actuator which causes the air operated valve to close. See Figures 12 and 13 for the valve control logics. This means that a loss of power to either solenoid valve will cause the associated HV-3184 or HV-3045 to fail open since the valve actuator cannot be vented.

One pressure switch for HV-3184 and one pressure switch for HV-3045 senses air pressure in the line between the solenoid valve and the actuator. If the air pressure decreases to 40 psig, an alarm will be received on a Balance of Plant Annunciator Panel. HV-3184 alarms on Panel L. HV-3045 alarms on Panel N.

It is possible to make up to either side of the surge tank from 2 sources--one from the demineralized water storage tank and one from the reactor makeup water storage tank. Makeup is controlled by MOV-3030A and B and 3031A and B, which are operated from the MCB. The makeup control valves are located in room 185 on the 100' elevation of the Aux Building.

The surge tank also has a connection for adding chemicals to the CCW system. Potassium chromate is added as a corrosion inhibitor. Normally closed mixing valves are provided to ensure mixing flow with the surge tank during chemical addition. Only one chemical mixing isolation valve may be open at any time. Simultaneous opening of chemical mixing isolation valves in opposite trains will result in a loss of two independent CCW loops due to cross-connecting trains through the mixing valves.

Potassium chromate is an environmental hazard and any liquid drained from the Component Cooling Water System must be disposed of in accordance with Appendix 5 of SOP-23.0. Handling of Potassium Chromate shall be done in accordance with approved procedures.

Relief from the surge tank relief valve is directed through a check valve to the floor drain tank. This relief is sized to pass the maximum amount of leakage (300 gpm) that would occur following a rupture of a reactor coolant pump (RCP) thermal barrier cooling coil, assuming that the isolation valves fail and the surge tank vent closes. The check valve prevents gases in the floor drain tank from contaminating the CCW system and exiting through the surge tank vent.

The surge tank normally vents to the auxiliary building nonradiation side through RCV-3028. In the event that R-17A or B senses a high radiation level, the vent valve closes automatically, minimizing the release of radioactivity to the auxiliary building. R17B is A train while R17A is B train related. Vacuum breakers are provided to prevent collapse of the tank or loss of system NPSH in the event of out-leakage during pump operation with the vent valve closed. The vacuum breakers lift at a setpoint of 1 psid or less to prevent maximum allowable vacuum of 1.69 psid.

Distribution Headers

Component cooling water discharging from the CCW heat exchangers divides into three flow paths. Two redundant lines supply the train oriented ESS loads, and the third line supplies the secondary heat exchanger loads. This third supply line can be isolated by MOV-3047. Each heat exchanger supplied by CCW is provided a relief valve to protect the heat exchanger from over-pressurization due to thermal expansion of CCW if the equipment is isolated from the cooling water.

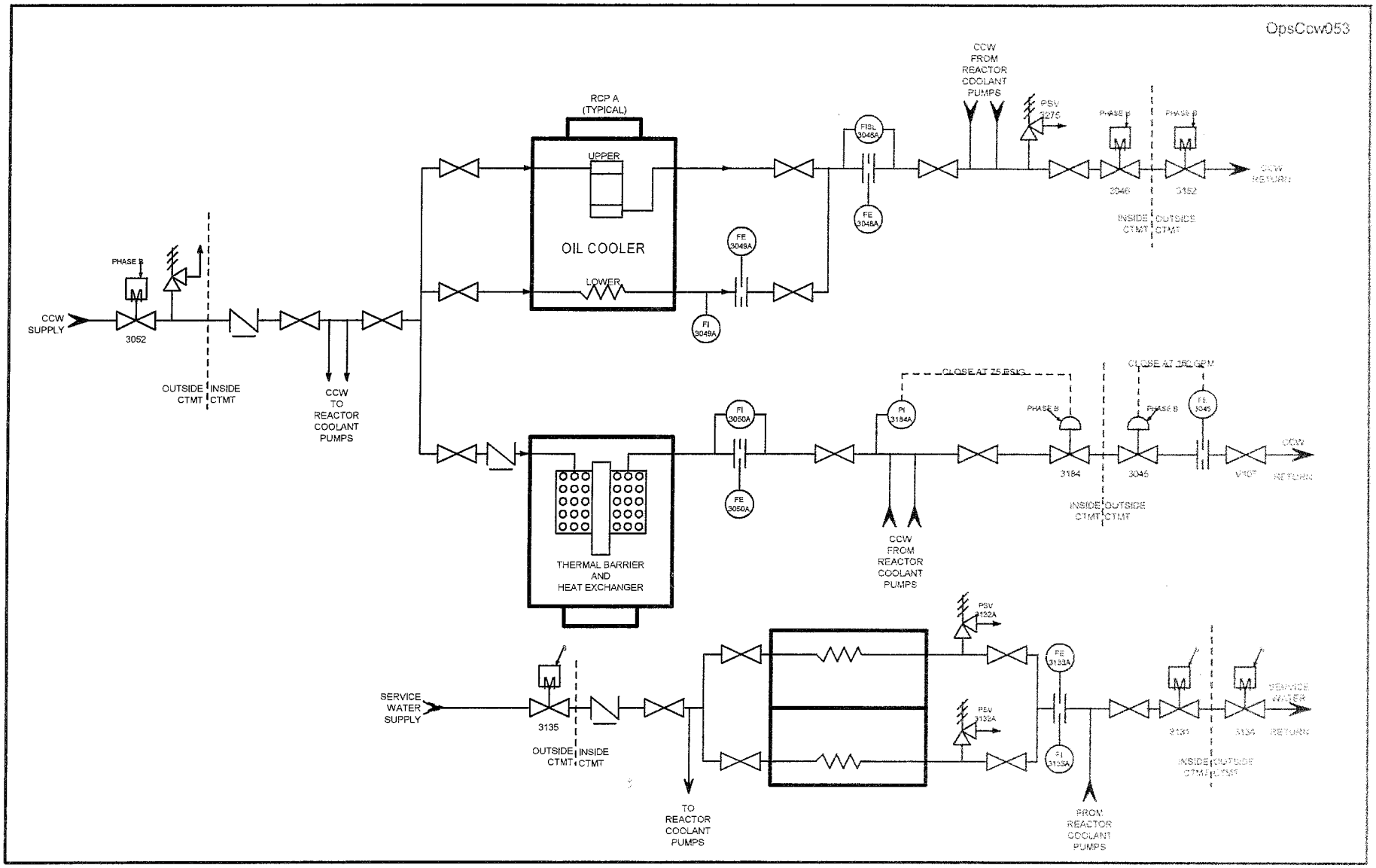

RCP - CCW & SW System

Figure 5

LOCATION DD2

D2	RCP THRM BARR CCW FLOW HI

SETPOINT: 160 ± 2 GPM

ORIGIN: 49x, Aux. Contact activated by Flow Switch (Q1P17FISH3045-A)

PROBABLE CAUSE

1. Rupture of a RCP Thermal Barrier Heat Exchanger.

AUTOMATIC ACTION

1. Closes CCW FROM RCP THRM BARR Q1P17HV3045.

NOTE: Failure of a RCP #1 Seal may result in isolation of CCW to the Thermal Barrier Heat Exchangers due to local boiling in the Thermal Barrier of the affected pump, caused by High #1 Seal Leakoff Flow.

OPERATOR ACTION

1. IF a loss of Seal Injection Flow has occurred AND a loss of Component Cooling Water to the Thermal Barrier Heat Exchanger has occurred and at least one method of seal cooling can not be immediately restored, THEN:
   a) Manually trip the reactor.
   b) Stop the reactor coolant pumps.
   c) Perform the actions required by FNP-1-EEP-0, REACTOR TRIP OR SAFETY INJECTION. (SEN 201)

2. Determine the cause of the alarm.

3. Closely monitor seal injection water flows, Seal Injection Water Temperatures and RCP Lower Bearing Temperatures.

NOTE: Proper RCP Seal Injection Water Flow and Seal Injection Water Temperature should provide adequate cooling for the RCP's Seals and Lower Bearings.

4. Notify appropriate personnel

5. Shutdown the plant and repair the affected Thermal Barrier Heat Exchanger as soon as possible.

References: A-177100, Sh. 197; B-175968, Pg. 6; D-175002, Sh. 2;D-177854; U-258242
NEL 98-0327

LOCATION DD3

D3	
	CCW FLOW FROM RCP OIL CLRS LO

SETPOINT: 100 + 10 GPM
- 0

ORIGIN:
1. Flow Switch (Q1P17FISL3048A-N)
2. Flow Switch (Q1P17FISL3048B-N)
3. Flow Switch (Q1P17FISL3048C-N)

PROBABLE CAUSE

1. Loss of Component Cooling Water.
2. Loss of Component Cooling Water Flow to the RCP's due to Phase "B" isolation signal.
3. Improper valve lineup.

AUTOMATIC ACTION

NONE

OPERATOR ACTION

1. Determine the cause of the alarm.

2. IF a loss of Component Cooling Water has occurred, THEN perform the actions required by FNP-1-AOP-9.0, LOSS OF COMPONENT COOLING WATER.

3. Closely monitor the RCP's Motor Bearing Temperatures.

NOTE: On a complete Loss of CCW Flow to RCP Motor Bearing Oil Coolers, the bearing temperature will exceed 195°F in approximately 2 minutes.

4. IF any RCP Motor Bearing Temperature exceeds 195°F, THEN:
   A. IF the Reactor is critical, THEN trip the reactor.
   B. Stop the RCP.
   C. Perform the actions required by FNP-1-EEP-0, REACTOR TRIP OR SAFETY INJECTION.
   D. Perform action of FNP-1-AOP-4.0, LOSS OF REACTOR COOLANT FLOW as time allows.

5. Correct the cause of the alarm and return flow to normal.

References: A-177100, Sh. 198; B-175968, Pg. 6 & 7; D-175002, Sh. 2; U-258242

35. 026 G2.1.2 002/BANK/FNP/LOWER//RO/FARLEY/10/2007/NO

FNP-1-ECP-1.1, LOSS OF EMERGENCY COOLANT RECIRCULATION, determines the number of Containment Spray pumps required based on which ONE of the following?

A. Containment pressure, containment temperature and containment sump level.

B. Containment temperature, number of Containment Coolers running, and RWST level.

C. Containment pressure, number of Containment Coolers running, and containment sump level.

D. Containment pressure, number of Containment Coolers running, and RWST level.

A - Incorrect, Containment pressure is correct. Containment temperature is not correct, but plausible due to the relationship between saturation temperature and pressure in the post LOCA Containment steam environment. Sump level is not correct but plausible because the procedure does address the concern for ECCS Sump to be > 4.6 ' as an indication of enough water to go on recirc later.

B - Incorrect, Containment cooler operation is correct. RWST level is correct. Containment temperature is not correct, but plausible due to the relationship between saturation temperature and pressure in the post LOCA Containment steam environment.

C - Incorrect, Containment pressure and cooler operation is correct. Sump level is not correct but plausible because the procedure does address the concern for ECCS Sump to be > 4.6 ' as an indication of enough water to go on recirc later.

D - Correct, ECP-1.1 uses these criteria to conserve RWST water, while still ensuring Containment pressure is maintained below 27 psig.

Conduct of Operations: Knowledge of operator responsibilities during all modes of plant operation.

Question Number: 16

Tier 2 Group 1

Importance Rating: 3.0

Technical Reference: ECP-1.1
Proposed references to be provided to applicants during examination: None
Learning Objective:
10 CFR Part 55 Content: 41.10

Comments:

Source :	BANK	Source if Bank:	FNP
Cognitive Level:	LOWER	Difficulty:	
Job Position:	RO	Plant:	FARLEY
Date:	10/2007	Previous NRC?:	NO

Step	Action/Expected Response	Response NOT Obtained

****

CAUTION: SI or spray pump damage will occur if suction is lost and the pump is not secured.

****

NOTE:

- IF both trains of RHR have lost emergency coolant recirculation capability AND ECCS sump level is approximately 4.6 ft or less, THEN the loss may be due to insufficient NPSH or air entrainment (vortexing) due to the low ECCS sump level.
- Erratic pump parameters (flow, discharge pressure, amps, etc.) are indications of pump cavitation.
- Step 1 is a continuing action.

___ 1	**Verify ECCS pumps not affected by sump blockage.**	1 IF both trains are affected such that at least one train of SI recirculation flow cannot be maintained, THEN go to FNP-1-ECP-1.3, LOSS OF EMERGENCY COOLANT RECIRCULATION CAUSED BY SUMP BLOCKAGE.
	1.1 [CA] Monitor ECCS pump suction conditions - NO INDICATION OF CAVITATION. CHG PUMP [] 1A [] 1B [] 1C RHR PUMP [] 1A [] 1B CS PUMP [] 1A [] 1B	
___ 2	**[CA] WHEN emergency coolant recirculation capability is restored, THEN go to procedure and step in effect.**	

___Page Completed

Step	Action/Expected Response	Response NOT Obtained
____10	**Evaluate containment spray requirements.**	
	10.1 Check containment spray pumps - ALIGNED TO RWST. RWST TO 1A(1B) CS PUMP [] Q1E13MOV8817A open [] Q1E13MOV8817B open	10.1 <u>IF</u> containment spray pumps aligned to the the containment sump, <u>THEN</u> proceed to Step 12.
	10.2 Determine number of containment spray pumps required based on the Table below.	

RWST LEVEL	CONTAINMENT PRESSURE	FAN COOLERS RUNNING IN EMERGENCY MODE	SPRAY PUMPS REQUIRED
GREATER THAN 12.5 FT	GREATER THAN 54 PSIG	—	2
	BETWEEN 27 PSIG AND 54 PSIG	0, 1	2
		2, 3	1
		4	0
	LESS THAN 27 PSIG	—	0
BETWEEN 4.5 FT and 12.5 FT	GREATER THAN 54 PSIG	—	2
	BETWEEN 27 PSIG and 54 PSIG	1, 2	1
		3, 4	0
	LESS THAN 27 PSIG	—	0
LESS THAN 4.5 FT	—	—	0

10.3 Establish required number of started containment spray pumps.

____Page Completed

36. 027 AA2.16 001/NEW//HIGHER//RO/FARLEY/11/2007/NO

Given the following:

- Unit 2 is at 100% power.
- PRZR Pressure Transmitter PT-444 fails LOW.

Which ONE of the following describes the INITIAL actions in response to this failure that will stabilize PRZR pressure?

A. Close 1 PRZR PORV ONLY.

B. Close PRZR Spray Valves and 1 PZR PORV.

C. Take Manual control of PRZR backup heaters.

D. Place the PRZR Spray Controllers, PK-444C & PK-444D, in MANUAL.

A incorrect. Credible because variations on what could happen if PT-445 failed low instead of PT-444, or if PT-444 failed high.

B incorrect. Credible because variations on what could happen if PT-445 failed low instead of PT-444, or if PT-444 failed high.

C correct. Because PT-444 inputs the master controller. If it fails low, heaters will energize in an attempt to raise pressure

D incorrect. Credible because variations on what could happen if PT-445 failed low instead of PT-444, or if PT-444 failed high.

Ability to determine and interpret the following as they apply to the Pressurizer Pressure Control Malfunctions: Actions to be taken if PZR pressure instrument fails low

Question Number: 45

Tier 1 Group 1

Importance Rating: RO 3.6
Technical Reference: AOP-100
Proposed references to be provided to applicants during examination: None
Learning Objective:
10 CFR Part 55 Content: 41.7

Comments:

Source :	NEW	Source if Bank:	
Cognitive Level:	HIGHER	Difficulty:	
Job Position:	RO	Plant:	FARLEY
Date:	11/2007	Previous NRC?:	NO

SECTION 1.1

PRESSURIZER PRESSURE

NOTE: Steps 1 and 2 are IMMEDIATE OPERATOR ACTIONS.

___ 1 **Verify RCS pressure is STABLE.**

1 IF required,
THEN take manual control of the following equipment as required.

Power operated relief valves

[] PRZR PORV Q1B31PCV445
[] PRZR PORV Q1B31PCV444B
OR
[] PRZR BLOCK VLV Q1B31MOV8000A
[] PRZR BLOCK VLV Q1B31MOV8000B

Pressurizer spray valves

[] PK-444C 1A Loop Spray vlv
[] PK-444D 1B Loop Spray vlv

Pressurizer Heaters

[] 1A PRZR HTR GROUP BACKUP
[] 1B PRZR HTR GROUP BACKUP
[] 1C PRZR HTR GROUP VARIABLE
[] 1D PRZR HTR GROUP BACKUP
[] 1E PRZR HTR GROUP BACKUP

SECTION 1.1

PRESSURIZER PRESSURE

NOTE: WHEN transitioning to FNP-1-EEP-0.0 AND at the Shift Supervisors direction, It is ACCEPTABLE for one team member to complete the Immediate Operator Actions of FNP-1-EEP-0.0, while the other team member verifies a Reactor Trip, then trips the appropriate RCPs before finishing the Immediate Operator Actions of FNP-1-EEP-0.0.

2 IF pressurizer pressure is decreasing due to a mechanically stuck open spray valve PCV444C or PCV444D THEN perform the following:

___ 2.1 IF the reactor is critical, THEN trip the reactor prior to pressure reaching 2100 PSIG.

___ 2.2 WHEN the reactor is tripped, THEN GO TO FNP-1-EEP-0.0, REACTOR TRIP OR SAFETY INJECTION.

___ 2.3 WHEN the reactor is tripped, THEN Verify 1A and 1B RCPs secured.

___ 2.4 IF a reactor trip not required, THEN go to FNP-1-AOP-4.0, LOSS OF REACTOR COOLANT FLOW.

___ **3 IF PORV is open and pressurizer pressure is less than 2310 psig, THEN close the PORV.**

3 IF the PORV will not close, THEN perform the following:

3.1 IF pressurizer pressure is decreasing due to a stuck open PORV, THEN close the associated PORV Block Valve.

3.2 IF PORV Block valve will not close, THEN trip the reactor and go to FNP-1-EEP-0.0, REACTOR TRIP OR SAFETY INJECTION.

SECTION 1.1

PRESSURIZER PRESSURE

NOTE: Section 1.1 Figure 1 is provided as reference material.

4 **IF an alarm was caused by an CONTROL instrument(PT-444/445) OR component failure, THEN perform the following as required to restore RCS pressure to desired value.**

___ 4.1 Take manual control of the following as required:

Power operated relief valves

[] PRZR PORV Q1B31PCV445
[] PRZR PORV Q1B31PCV444B

OR

[] PRZR BLOCK VLV Q1B31MOV8000A
[] PRZR BLOCK VLV Q1B31MOV8000B

Pressurizer spray valves

[] PK-444C 1A Loop Spray vlv
[] PK-444D 1B Loop Spray vlv

Pressurizer Heaters

[] 1A PRZR HTR GROUP BACKUP
[] 1B PRZR HTR GROUP BACKUP
[] 1C PRZR HTR GROUP VARIABLE
[] 1D PRZR HTR GROUP BACKUP
[] 1E PRZR HTR GROUP BACKUP

___ 4.2 WHEN plant conditions permit, THEN restore components to automatic control.

___ 4.3 IF B/U heaters automatically energized with pressure above 2210 psig, THEN verify the pressurizer master controller potentiometer setting using the plant curve book.

SECTION 1.1

PRESSURIZER PRESSURE

___ 5 **IF a PROTECTION instrument failure has occured, THEN determine which pressure channel has caused the alarm.**

The following trip bistable lights are associated with pressurizer pressure protection instrument loops.

Instrument Loop	Name	Bistable Lights
Q1B31PT455	PRZR PRESS PROTECTION CHANNEL I TRANSMITTER	TSLB1 8.1 TSLB2 7.1, 17.1, 19.1 20.1 TSLB3 7.1
Q1B31PT456	PRZR PRESS PROTECTION CHANNEL II TRANSMITTER	TSLB1 8.2 TSLB2 7.2, 17.2, 19.2 20.2 TSLB3 7.2
Q1B31PT457	PRZR PRESS PROTECTION CHANNEL III TRANSMITTER	TSLB1 8.3, TSLB2 7.3, 17.3, 19.3, 20.3 TSLB3 7.3

___ 5.1 IF either PT455 or PT457 have failed, THEN defeat the transmitter input to the Sub Cooling Margin Monitor per FNP-1-SOP-68.0 INADEQUATE CORE COOLING MONITORING SYSTEM.

___ 6 **Refer to Tech Specs for an LCO requirements that exist.**

- Sections 3.3.1, 3.3.2, & 3.3.3 for insstrument failures
- Section 3.4.1 for DNBR limits.
- Section 3.4.11 PORVs.

37. 027 K2.01 002/BANK/FARLEY/LOWER//RO/FARLEY/10/2007/NO

Which ONE of the following is the power supply to the 1A Containment Pre-Access Filtration Unit?

A. 208V MCC G

B. 208V MCC V

C. 600V MCC C

D. 600V MCC B

A. Incorrect. Plausible because other similar atmosphere control ventilation powered from 208V MCC G such as TSC filter fan & TSC FILTER A/C CONDENSING UNIT.

B. Incorrect. Plausible because other similar ventilation equipment powered from 208V MCC V such as 600V MCC B AHU 1 & 600V MCC B AHU B.

C. Correct.

D. Incorrect. Plausible because other similar ventilation epuipment powered from 600V MCC B such as Reactor Cavity Cooling fan B

CTMT PRE-ACCESS FILTRATION UNIT A	600V MCC C	N/A	S/U B	AUX A
CTMT PRE-ACCESS FILTRATION UNIT B	600V MCC D	N/A	S/U A	AUX A

Knowledge of bus power supplies to the following: Fans

Question Number: 34

Tier 2 Group 2

Importance Rating: 3.1

Technical Reference: Cont Vent LP OPS-52107A; AUX bld. ventalation LP OPS-52107B

Proposed references to be provided to applicants during examination: None

Learning Objective:

10 CFR Part 55 Content: 41.5

Comments:

Source :	BANK	Source if Bank:	FARLEY
Cognitive Level:	LOWER	Difficulty:	
Job Position:	RO	Plant:	FARLEY
Date:	10/2007	Previous NRC?:	NO

TABLE 3
POWER SUPPLIES

LOAD	SUPPLY	EMERGENCY DIESEL	Transformer	
			Normal	Alternate
DOME RECIRC FAN A	600V MCC C	N/A	S/U B	AUX A
DOME RECIRC FAN B	600V MCC C	N/A	S/U B	AUX A
DOME RECIRC FAN C	600V MCC E	N/A	S/U A	AUX A
DOME RECIRC FAN D	600V MCC D	N/A	S/U A	AUX A
REACTOR CAVITY COOLING FAN A	600V MCC A	A TRAIN DIESEL	S/U A	S/U B
REACTOR CAVITY COOLING FAN B	600V MCC B	B TRAIN DIESEL	S/U B	S/U A
REACTOR CAVITY COOLING FAN A DAMPER MOV 3310A	600V MCC A	A TRAIN DIESEL	S/U A	S/U B
REACTOR CAVITY COOLING FAN B DAMPER MOV 3310A	600V MCC B	B TRAIN DIESEL	S/U B	S/U A
REFUELING WATER VENT SUPPLY FAN	600V MCC C	N/A	S/U B	AUX A
REFUELING WATER VENT EXHAUST FAN	600V MCC C	N/A	S/U B	AUX A
CTMT PRE-ACCESS FILTRATION UNIT A	600V MCC C	N/A	S/U B	AUX A
CTMT PRE-ACCESS FILTRATION UNIT B	600V MCC D	N/A	S/U A	AUX A
CTMT MAIN PURGE SUPPLY FAN	600V LC A	N/A	S/U A	AUX A
CTMT MAIN PURGE EXHAUST FAN	600V LC A	N/A	S/U A	AUX A
CTMT MINI PURGE SUPPLY FAN	600V MCC D	N/A	S/U A	AUX A
CTMT MINI PURGE EXHAUST FAN	600V MCC D	N/A	S/U A	AUX A

cavity following an accident. The air in the cavity then enters a semi-ring suction duct through six inlets. Two, single-speed, reactor cavity cooling fans take suction on the common duct and discharge the air directly to the containment 105 foot elevation.

Normally, one reactor cavity cooling fan is running, and the other is in standby. If this system should fail, the reactor must be shut down to prevent high temperatures from damaging the nuclear instrumentation, reactor vessel supports, and reactor cavity walls. The reactor cavity cooling fans may be controlled from the BOP or locally from their associated MCC auxiliary relay panel. Instrumentation is provided in both locations to inform the operator of fan operation. The reactor cavity cooling fans are started by the LOSP sequencer if the local/remote selector is in remote. The sequencer start signal is disabled if the local/remote selector is selected to local.

The reactor cavity cooling fan dampers (MOV-3310A and B) open and close automatically when their respective cooling fan is energized or de-energized. The damper associated with the non-operating fan remains closed in order to prevent short cycling of the airflow through the standby unit. Individual valve position indication is provided locally on its respective MCC auxiliary relay cabinet and on the BOP.

Refueling Water Surface Ventilation System

Refer to Figure 1. The refueling water surface ventilation system removes water vapor and any gaseous activity above the refueling canal, improves visibility of the reactor cavity, and reduces heat stress on personnel working in the vicinity of the refueling cavity.

The refueling water surface ventilation supply fan takes a suction from containment atmosphere and discharges through vents just above the water in the refueling cavity. The refueling water surface ventilation exhaust fan takes a suction from vents on the opposite side of the cavity and exhausts through a discharge screen that has been installed in the duct at elevation 149' 10" to allow the exhaust fan to discharge into containment.

Both the refueling water surface ventilation supply and exhaust fans are controlled from the BOP. Indication of fan operation is on the BOP.

Containment Pre-Access Filtration System

Refer to Figure 1. The two containment pre-access filtration units reduce activity levels in the containment atmosphere prior to routine personnel access at power in advance of a reactor shutdown.

Each pre-access filtration fan draws contaminated air from the containment across a filter unit and then discharges the air locally into the containment atmosphere. The filter unit consists of a prefilter, HEPA filter, and an impregnated activated charcoal filter for absorption of radioiodine on the charcoal surface. Both filtration units normally are secured.

The pre-access filtration fans may be operated from their respective MCC auxiliary relay cabinet located in the auxiliary building. An MCB alarm informs the operator of fan overload, fan low differential pressure, or filter high differential pressure.

Containment Purge System

Refer to Figure 2. The containment purge system is an independent system that supplies and exhausts air to and from containment. Supply air is drawn from the outside atmosphere through a ventilation inlet on the auxiliary building roof. It passes through the inlet supply damper (HV-3202B), through the purge air handling unit (AHU) particulate filter and through the heating coil. The air then passes through the main purge supply fan, through purge supply damper (HV-3198C) and then can pass through main purge supply damper outside CTMT (HV-3198D) or through the minipurge supply fan and supply damper (HV-2866C) into CTMT. The air passes enters CTMT through the main purge or minipurge supply damper (HV-3197 or HV-2866D). Exhaust air is directed from containment through the main purge or minipurge exhaust dampers (HV-3196 or HV-2867D) into the auxiliary building main or minipurge damper (HV3198A or HV-2867C). It then passes through purge exhaust damper 3198B and into the CTMT purge filtration unit. The air passes through a PAC (particulate, absolute, charcoal) filter and then through the main purge exhaust fan and then through the purge outlet exhaust damper (HV3203A) The exhaust air then passes through the auxiliary building main exhaust plenum to the plant vent stack for controlled dispersion to the atmosphere.

The supply portion of the system includes an inlet supply damper, the containment purge air handling unit (AHU), five isolation butterfly valves, and the minipurge supply fan. The exhaust portion of the system includes five isolation butterfly valves, the minipurge exhaust fan,

TABLE 3
POWER SUPPLIES

LOAD	SUPPLY	EMERGENCY DIESEL	Transformer	
			Normal	Alternate
NON-RADWASTE AREA HVAC				
AUX FEEDWATER ROOM COOLER A	600V MCC A	A Train Diesel	S/U A	S/U B
AUX FEEDWATER ROOM COOLER B	600V MCC B	B Train Diesel	S/U B	S/U A
CCW PUMP ROOM COOLER A	600V MCC A	A Train Diesel	S/U A	S/U B
CCW PUMP ROOM COOLER B	600V MCC B	B Train Diesel	S/U B	S/U A
NON-RADWASTE AREA AHU	600V MCC C	N/A	S/U B	AUX A
NON-RADWASTE AREA EXHAUST FAN	600V MCC D	N/A	S/U A	AUX A
BATTERY ROOM EXHAUST FAN A	208V MCC A	A Train Diesel	S/U A	S/U B
BATTERY ROOM EXHAUST FAN B	208V MCC B	B Train Diesel	S/U B	S/U A
BATTERY CHARGER ROOM COOLER A	600V MCC A	A Train Diesel	S/U A	S/U B
BATTERY CHARGER ROOM COOLER C	600V MCC A OR B	A or B Train Diesel	S/U A or B	
BATTERY CHARGER ROOM COOLER B	600V MCC B	B Train Diesel	S/U B	S/U A
CABLE SPREADING ROOM A/C CONDENSER	600V MCC C	N/A	S/U B	AUX A
CABLE SPREADING ROOM AHU	208V MCC D	N/A	S/U A	AUX A
CABLE SPREADING ROOM EXHAUST FAN	208V MCC G	B Train Diesel	S/U B	S/U A
ELECTRICAL CABLE CHASE SUPPLY FAN	208V MCC C	N/A	S/U B	AUX A
ELECTRICAL CABLE CHASE EXHAUST FAN	208V MCC C	N/A	S/U B	AUX A
LOWER EQUIPMENT ROOM AHU	600V MCC E	N/A	S/U A	AUX A
LOWER EQUIPMENT ROOM EXHAUST FAN	600V MCC E	N/A	S/U A	AUX A
600V LC A/C CONDENSING UNIT	600V MCC E	N/A	S/U A	AUX A
600V LC A/C AHU	600V MCC E	N/A	S/U A	AUX A
600V LC D AHU	600V MCC A	A Train Diesel	S/U A	S/U B
600V LC E AHU	600V MCC E	N/A	S/U A	AUX A

TABLE 3
POWER SUPPLIES

LOAD	SUPPLY	EMERGENCY DIESEL	Transformer	
			Normal	Alternate
SPDS COMPUTER UPS VENTILATION				
UPS SUPPLY FAN	600V MCC E	N/A	S/U A	AUX A
UPS PRIMARY EXHAUST FAN	600V MCC E	N/A	S/U A	AUX A
UPS SECONDARY EXHAUST FAN	600V MCC E	N/A	S/U A	AUX A
ACCESS CONTROL AREA HVAC SYSTEM				
RACA AHU	600V MCC 1II	N/A	S/U A	S/U B
RACA CONDENSING UNIT	600V MCC 1II	N/A	S/U A	S/U B
RACA EXHAUST FAN	208V MCC 1II	N/A	S/U A	S/U B
RACA BOOSTER FAN #1 **Fan no longer in service**	208V MCC 1II	N/A	S/U A	S/U B
RACA BOOSTER FAN #2	208V MCC 1II	N/A	S/U A	S/U B
RACA TRANSFER FAN #1	208V MCC 1II	N/A	S/U A	S/U B
RACA TRANSFER FAN #2	208V MCC 1II	N/A	S/U A	S/U B
DOSIMETRY LAB AHU	208V MCC 1II	N/A	S/U A	S/U B
DOSIMETRY LAB A/C CONDENSING UNIT	600V MCC 1II	N/A	S/U A	S/U B
RADWASTE AREA HVAC				
RADWASTE AREA AHU	600V LC C	N/A	S/U B	AUX A
RADWASTE AREA EXHAUST FAN A	600V MCC C	N/A	S/U B	AUX A
RADWASTE AREA EXHAUST FAN B	600V MCC D	N/A	S/U A	AUX A
AUX BLDG EXHAUST FAN A	600V LC C	N/A	S/U B	AUX A
AUX BLDG EXHAUST FAN B	600V LC B	N/A	S/U A	AUX A
TSC AHU	208V MCC G	B Train Diesel	S/U B	S/U A

TABLE 3
POWER SUPPLIES

LOAD	SUPPLY	EMERGENCY DIESEL	Transformer	
			Normal	Alternate
TSC FILTER FAN	208V MCC G	B Train Diesel	S/U B	S/U A
TSC FILTER A/C CONDENSING UNIT	208V MCC G	B Train Diesel	S/U B	S/U C
600V LC M & N AHU	600V MCC D	N/A	S/U A	AUX A
600V LC M & N A/C CONDENSING UNIT	600V MCC D	N/A	S/U A	AUX A
HOT MACHINE SHOP AHU	600V MCC F	A Train Diesel	S/U A	S/U B
HOT MACHINE SHOP A/C CONDENSING UNIT	208V MCC G	B Train Diesel	S/U B	S/U A
RADIOACTIVE LAB AHU	208V MCC F	A Train Diesel	S/U A	S/U B
RADIOACTIVE LAB A/C CONDENSING UNIT	208V MCC C	N/A	S/U B	AUX A
RADIOACTIVE LAB EXHAUST FANS A	208V MCC F	A Train Diesel	S/U A	S/U B
RADIOACTIVE LAB EXHAUST FANS B	208V MCC G	B Train Diesel	S/U B	S/U A
SAMPLE ROOM AHU	208V MCC D	N/A	S/U A	AUX A
SAMPLE ROOM A/C CONDENSING UNIT	208V MCC C	N/A	S/U B	AUX A
COUNTING ROOM AHU	208V MCC G	B Train Diesel	S/U B	S/U A
COUNTING ROOM A/C CONDENSING UNIT	208V MCC C	N/A	S/U B	AUX A
GAS ANALYSIS ROOM AHU	208V MCC G	B Train Diesel	S/U B	S/U A
GAS ANALYSIS ROOM A/C CONDENSING UNIT	208V MCC C	N/A	S/U B	AUX A
GAS ANALYSIS ROOM EXHAUST FAN	208V MCC F	A Train Diesel	S/U A	S/U B
600V MCC A AHU	600V MCC U	A Train Diesel	S/U A	S/U B
600V MCC B AHU A	208V MCC V	B Train Diesel	S/U B	S/U A
600V MCC B AHU B	208V MCC V	B Train Diesel	S/U B	S/U A
HOT SHUTDOWN PANEL ROOM AHU (UNIT 1 ONLY)	208V MCC 1D	N/A	S/U A	AUX A
HOT LAUNDRY ROOM AHU (UNIT 1 ONLY)	600V MCC 1C	N/A	S/U B	AUX A
HOT LAUNDRY ROOM EXHAUST FAN (UNIT 1 ONLY)	600V LC 1M	N/A	S/U A	AUX A
HHSI PUMP ROOM COOLER A	600V MCC A	A Train Diesel	S/U A	S/U B

TABLE 3
POWER SUPPLIES

LOAD	SUPPLY	EMERGENCY DIESEL	Transformer	
			Normal	Alternate
	OR B	A or B Train Diesel	S/U A or B	
HHSI PUMP ROOM COOLER C	600V MCC B	B Train Diesel	S/U B	AUX A
CTMT SPRAY PUMP ROOM COOLER A	600V MCC A	A Train Diesel	S/U A	S/U B
CTMT SPRAY PUMP ROOM COOLER B	600V MCC B	B Train Diesel	S/U B	S/U A
RHR PUMP ROOM COOLER A	600V MCC A	A Train Diesel	S/U A	S/U B
RHR PUMP ROOM COOLER B	600V MCC B	B Train Diesel	S/U B	S/U A
SPENT FUEL AREA HVAC				
SFP AHU	600V MCC C	N/A	S/U B	AUX A
SFP EXHAUST FAN A	600V MCC C	N/A	S/U B	AUX A
SFP EXHAUST FAN B	600V MCC D	N/A	S/U A	AUX A
PENETRATION ROOM HVAC				
PENETRATION ROOM FILTRATION RECIRC FAN A	600V MCC A	A Train Diesel	S/U A	S/U B
PENETRATION ROOM FILTRATION RECIRC FAN B	600V MCC B	B Train Diesel	S/U B	S/U A
PENETRATION ROOM FILTRATION EXHAUST FAN A	600V MCC A	A Train Diesel	S/U A	S/U B
PENETRATION ROOM FILTRATION EXHAUST FAN B	600V MCC B	B Train Diesel	S/U B	S/U A
MOV 3361A (V001A)	600V MCC U	A Train Diesel	S/U A	S/U B
MOV 3361B (V001B)	600V MCC V	B Train Diesel	S/U B	S/U A
MOV 3362A (V001C)	600V MCC U	A Train Diesel	S/U A	S/U B
MOV 3362B (V001D)	600V MCC V	B Train Diesel	S/U B	S/U A
ELECTRICAL PENETRATION ROOM AHU A	600V MCC C	N/A	S/U B	AUX A
ELECTRICAL PENETRATION ROOM AHU B	600V MCC D	N/A	S/U A	AUX A
ELECTRICAL PENETRATION ROOM AHU C	600V MCC D	N/A	S/U A	AUX A
ELECTRICAL PENETRATION ROOM AHU D	600V MCC D	N/A	S/U A	AUX A

38. 029 EK1.01 001/NEW//LOWER//RO/FARLEY/11/2007/NO

Given the following:

- An ATWT has occurred on Unit 2 during coastdown prior to entering a refueling outage.
- The crew is performing actions of FNP-2-FRP-S.1, Response to Nuclear Power Generation/ATWT.
- An operator has been dispatched to trip the reactor locally.
- Attempts to establish Emergency boration have been unsuccessful.
- Reactor power indicates 16%.
- Intermediate Range Startup rate is slightly positive.

Which ONE of the following describes the action required in accordance with FRP-S.1?

A. Return to EEP-0.0, Reactor Trip or Safety Injection. Perform actions of other procedures that will not add positive reactivity.

B. ✓ Allow the RCS to heat up, and continue attempts to place the reactor in a subcritical condition in accordance with FRP-S.1.

C. Stabilize RCS temperature and pressure in accordance with FRP-S.1 and ensure safeguards equipment is operating as required in accordance with EEP-0.0.

D. Allow the RCS to heat up in accordance with FRP-S.1. Return to procedure and step in effect. Continue attempts to establish emergency boration flow until adequate Shutdown Margin is verified.

A is incorrect because do not return to EEP-0 if power is >5%. Credible because steps of EEP-0 are performed if SI actuates.

B is correct. During coastdown at EOL, MTC is negative under all conditions. Do not leave FRP-S.1 until power below 5%

C is incorrect only because RCS temperature is not stabilized, it is allowed to rise.

D is incorrect because do not return to EEP-0 if power is >5%.

`Knowledge of the operational implications of the following concepts as they apply to the ATWS: Reactor nucleonics and thermo-hydraulics behavior

Question Number: 46

Tier 1 Group 1

Importance Rating: RO 2.8

Technical Reference: FRP-S.1
Proposed references to be provided to applicants during examination: None
Learning Objective:
10 CFR Part 55 Content: 41.10

Comments:

Source :	NEW	Source if Bank:	
Cognitive Level:	LOWER	Difficulty:	
Job Position:	RO	Plant:	FARLEY
Date:	11/2007	Previous NRC?:	NO

Step	Action/Expected Response	Response NOT Obtained

****

CAUTION: [CA] RCPs should NOT be tripped with reactor power GREATER THAN 5%.

****

NOTE: Steps 1 and 2 are IMMEDIATE ACTION steps.

___ 1	**Verify reactor - TRIPPED.** RX TRIP ACTUATION [] AB to TRIP	1 Perform the following. 1.1 Trip CRDM MG set supply breakers. 1A(1B) MG SET SUPP BKR [] N1C11E005A [] N1C11E005B 1.2 IF reactor still NOT tripped, THEN perform the following. • Insert control rods in manual control. OR • Verify rods insert in AUTO at greater than 48 steps per minute. 1.2.1 Dispatch an operator to locally trip the reactor trip and bypass breakers.

___Page Completed

Step	Action/Expected Response	Response NOT Obtained
	NOTE: The DEH Valve Test Display may be used for alternate indication of turbine stop valve and governor valve position.	
___ 2	**Check turbine - TRIPPED.** [] TSLB2 14-1 lit [] TSLB2 14-2 lit [] TSLB2 14-3 lit [] TSLB2 14-4 lit	2 Perform the following. 2.1 Place MAIN TURB EMERG TRIP switch to TRIP for at least 5 seconds. 2.2 <u>IF</u> turbine <u>NOT</u> tripped, <u>THEN</u> close GVs. 2.2.1 Reduce GV position demand signal to zero from DEH panel. [] TURBINE MANUAL depressed [] GV CLOSE depressed [] FAST ACTION depressed

Step 2 continued on next page.

___Page Completed

Step	Action/Expected Response	Response NOT Obtained
		2.3 IF steam flow to main turbine NOT secured, THEN perform the following. 2.3.1 Close all main steam line isolation and bypass valves. 1A(1B,1C) SG MSIV - TRIP [] Q1N11HV3369A [] Q1N11HV3369B [] Q1N11HV3369C [] Q1N11HV3370A [] Q1N11HV3370B [] Q1N11HV3370C 1A(1B,1C) SG MSIV - BYPASS [] Q1N11HV3368A [] Q1N11HV3368B [] Q1N11HV3368C [] Q1N11HV3976A [] Q1N11HV3976B [] Q1N11HV3976C 2.3.2 IF any MSIV fails to close THEN place the associated test switch in the TEST position.

SG	1A	1B	1C
1A(1B,1C) SG MSIV - TEST Q1N11HV	[]3369A/ 70A	[]3369B/ 70B	[]3369C/ 70C

____Page Completed

Step	Action/Expected Response	Response NOT Obtained
___ 3	**Verify AFW pumps - RUNNING.**	
	3.1 MDAFWPs - RUNNING [] 1A amps > 0 [] 1B amps > 0	
	3.2 TDAFWP - RUNNING IF NECESSARY • TDAFWP STM SUPP FROM 1B(1C) SG [] MLB-4 1-3 lit [] MLB-4 2-3 lit [] MLB-4 3-3 lit • TDAFWP SPEED [] SI 3411A > 3900 rpm • TDAFWP SPEED CONT [] SIC 3405 at 100%	

NOTE:
- 2500 gallons of emergency boration is required for each control rod not fully inserted, up to a maximum of 17,309 gallons.
- [CA] Emergency boration should continue until an adequate shutdown margin is established.

___ 4	**Initiate Emergency Boration of the RCS.**	
	4.1 Verify at least one CHG PUMP - RUNNING.	

Step 4 continued on next page.

___Page Completed

Step	Action/Expected Response	Response NOT Obtained
	4.2 Start a boric acid transfer pump. BATP [] 1A [] 1B	4.2 Perform the following. 4.2.1 Align charging pump suction to RWST. RWST TO CHG PUMP [] Q1E21LCV115B open [] Q1E21LCV115D open VCT OUTLET ISO [] Q1E21LCV115C closed [] Q1E21LCV115E closed 4.2.2 Proceed to step 4.4.
	4.3 Align normal emergency boration. EMERG BORATE TO CHG PUMP SUCT [] Q1E21MOV8104 open	4.3 Perform the following. • Align charging pump suction to RWST. RWST TO CHG PUMP [] Q1E21LCV115B open [] Q1E21LCV115D open VCT OUTLET ISO [] Q1E21LCV115C closed [] Q1E21LCV115E closed OR • Align manual emergency boration flow path. BORIC ACID TO BLENDER [] Q1E21FCV113A open MAN EMERG BORATION [] Q1E21V185 open (100 ft. AUX BLDG rad-side chemical mixing tank area)

Step 4 continued on next page.

____Page Completed

Step	Action/Expected Response	Response NOT Obtained
	4.4 Establish adequate letdown.	
	4.4.1 Verify 45 GPM letdown orifice - IN SERVICE. LTDN ORIF ISO 45 GPM [] Q1E21HV8149A open	
	4.4.2 Verify one 60 GPM letdown orifice - IN SERVICE. LTDN ORIF ISO 60 GPM [] Q1E21HV8149B open [] Q1E21HV8149C open	
	4.5 Check pressurizer pressure LESS THAN 2335 psig.	4.5 Verify PRZR PORVs and PRZR PORV ISOs - OPEN. <u>IF</u> <u>NOT</u>, <u>THEN</u> open PRZR PORVs and PORV ISOs as necessary until pressurizer pressure less than 2135 psig.
	4.6 Establish adequate charging flow. • <u>IF</u> boration is from boric acid storage tank, <u>THEN</u> verify charging flow - GREATER THAN 40 GPM. <u>OR</u> • <u>IF</u> boration is from the RWST, <u>THEN</u> verify charging flow - GREATER THAN 92 GPM.	

Step 4 continued on next page.

___Page Completed

Step	Action/Expected Response	Response NOT Obtained
	4.7 Verify emergency boration flow adequate.	
	4.7.1 IF normal emergency boration flow path aligned, THEN check emergency boration flow greater than 30 GPM. BORIC ACID EMERG BORATE [] FI 110	
	4.7.2 IF manual emergency boration flow path aligned, THEN check boric acid flow greater than 30 GPM. MAKEUP FLOW TO CHG/VCT [] BA FI 113	
	4.7.3 IF boration is from the RWST, THEN verify charging flow - GREATER THAN 92 GPM.	

____Page Completed

Step	Action/Expected Response	Response NOT Obtained
___ 5	**Verify containment ventilation isolation.**	
	5.1 Verify containment purge dampers - CLOSED. [] 3197 [] 3198D [] 3198C [] 3196 [] 3198A [] 3198B	5.1 Manually close dampers.
	5.2 Verify containment mini purge dampers - CLOSED. CTMT PURGE DMPRS MINI-2866C & 2867C FULL-3198A & 3198D [] 2866C [] 2867C CTMT PURGE DMPRS MINI-2866D & 2867D FULL-3196 & 3197 BOTH-3198B & 3198C [] 2866D [] 2867D	5.2 Manually close dampers.
	5.3 Stop MINI PURGE SUPP/EXH FAN.	
___ 6	**Check SI actuated.**	6 [CA] <u>IF</u> an SI signal is actuated during this procedure, <u>THEN</u> initiate ATTACHMENT 1, AUTOMATIC SAFETY INJECTION VERIFICATION.
	6.1 Check any SI actuated indication. BYP & PERMISSIVE SAFETY INJECTION [] ACTUATED status light lit [] MLB-1 1-1 lit [] MLB-1 11-1 lit	
	6.2 Initiate ATTACHMENT 1, AUTOMATIC SAFETY INJECTION VERIFICATION.	

___Page Completed

Step	Action/Expected Response	Response NOT Obtained
___ 7	**Check the following trips.**	
	7.1 Verify all reactor trip and reactor trip bypass breakers - OPEN.	7.1 Locally open the reactor trip and reactor trip bypass breakers.
	7.2 Check turbine - TRIPPED. [] TSLB2 14-1 lit [] TSLB2 14-2 lit [] TSLB2 14-3 lit [] TSLB2 14-4 lit	7.2 Locally place turbine overspeed lever to TRIP for at least 5 seconds. (189 ft, TURB BLDG)

___Page Completed

Step	Action/Expected Response	Response NOT Obtained

****

CAUTION: Emergency boration should be continued until adequate shutdown margin is established.

****

NOTE: Step 8 is a continuing action step.

___ 8	**[CA] Check if reactor still critical.** • Check power range indication - GREATER THAN OR EQUAL TO 5%. PR1(2,3,4) PERCENT FULL POWER [] NI 41B [] NI 42B [] NI 43B [] NI 44B OR • Check any intermediate range startup rate - POSITIVE. IR1(2) S/U RATE [] NI 35D [] NI 36D	8 Go to procedure and step in effect.

___Page Completed

Step	Action/Expected Response	Response NOT Obtained
___ 9	**Monitor CST level.**	
	9.1 [CA] Check CST level greater than 5.3 ft. CST LVL [] LI 4132A [] LI 4132B	9.1 Align AFW pumps suction to SW using FNP-1-SOP-22.0, AUXILIARY FEEDWATER SYSTEM.
	9.2 Align makeup to the CST from water treatment plant <u>OR</u> demin water system using FNP-1-SOP-5.0, DEMINERALIZED MAKEUP WATER SYSTEM, as necessary.	
___ 10	**Check SG levels.**	
	10.1 Check at least one SG narrow range level - GREATER THAN 31%{48%}.	10.1 Perform the following. 10.1.1 Verify total AFW flow greater than 700 gpm. AFW FLOW TO 1A(1B,1C) SG [] FI 3229A [] FI 3229B [] FI 3229C AFW TOTAL FLOW [] FI 3229

Step 10 continued on next page.

___Page Completed

Step	Action/Expected Response	Response NOT Obtained
		10.1.2 Verify AFW valves open. MDAFWP TO 1A(1B,1C) SG FLOW CONT [] HIC 3227AA [] HIC 3227BA [] HIC 3227CA TDAFWP TO 1A(1B,1C) SG FLOW CONT [] HIC 3228AA [] HIC 3228BA [] HIC 3228CA AFW TO 1A(1B,1C) SG STOP VLV [] Q1N23MOV3350A [] Q1N23MOV3350B [] Q1N23MOV3350C MDAFWP TO 1A(1B,1C) SG ISO (BOP) [] Q1N23MOV3764A [] Q1N23MOV3764D [] Q1N23MOV3764F [] Q1N23MOV3764E [] Q1N23MOV3764B [] Q1N23MOV3764C

Step 10 continued on next page.

____Page Completed

Step	Action/Expected Response	Response NOT Obtained

10.2 [CA] WHEN SG narrow range level greater than 31%{48%}, THEN maintain SG narrow range level 31%-65%{48%-65%}.

10.2.1 Control MDAFWP flow.

MDAFWP FCV 3227
RESET
[] A TRN reset
[] B TRN reset

MDAFWP TO
1A/1B/1C SG
B TRN
[] FCV 3227 in MOD

SG	1A	1B	1C
MDAFWP TO 1A(1B,1C) SG Q1N23HV	[]3227A in MOD	[]3227B in MOD	[]3227C in MOD
MDAFWP TO 1A(1B,1C) SG FLOW CONT HIC	[]3227AA adjusted	[]3227BA adjusted	[]3227CA adjusted

Step 10 continued on next page.

____Page Completed

Step	Action/Expected Response	Response NOT Obtained

10.2.2 Control TDAFWP flow.

TDAFWP FCV 3228
[] RESET reset

TDAFWP
SPEED CONT
[] SIC 3405 adjusted

SG	1A	1B	1C
TDAFWP TO 1A(1B,1C) SG Q1N23HV	[]3228A in MOD	[]3228B in MOD	[]3228C in MOD
TDAFWP TO 1A(1B,1C) SG FLOW CONT HIC	[]3228AA adjusted	[]3228BA adjusted	[]3228CA adjusted

___11 **Verify dilution paths isolated.**

11.1 Isolate RMW to boric acid blender.

RMW
TO BLENDER
[] Q1E21FCV114B closed

11.2 Notify Chemistry to secure the zinc addition system (ZAS).

11.3 Verify RMW supp iso to CHG pump suction locked closed (key # Z-58).

[] Q1E21V212 locked closed (100' elev. AUX BLDG BIT area at suction of CHG pumps)

11.1 Locally isolate RMW to CVCS.

RMW TO CVCS ISO
[] Q1E21V233 closed (100' elev. AUX BLDG above hydro test pump)

___Page Completed

Step	Action/Expected Response	Response NOT Obtained
___12	**Check for reactivity addition from UNCONTROLLED RCS cooldown:** • Check RCS cold leg temperature - DECREASING IN AN UNCONTROLLED MANNER. RCS COLD LEG TEMP [] TR 410 OR • Check any SG pressure - FALLING IN AN UNCONTROLLED MANNER OR LESS THAN 50 psig.	12 Perform the following: 12.1 Stop any CONTROLLED cooldown. 12.2 Proceed to step 15.
___13	**Check main steam line isolation and bypass valves - CLOSED.**	13 Close the main steam line isolation and bypass valves. 1A(1B,1C) SG MSIV - TRIP [] Q1N11HV3369A [] Q1N11HV3369B [] Q1N11HV3369C [] Q1N11HV3370A [] Q1N11HV3370B [] Q1N11HV3370C 1A(1B,1C) SG MSIV - BYPASS [] Q1N11HV3368A [] Q1N11HV3368B [] Q1N11HV3368C [] Q1N11HV3976A [] Q1N11HV3976B [] Q1N11HV3976C
___14	**Check SGs not faulted.**	
	14.1 Check no SG pressure - FALLING IN AN UNCONTROLLED MANNER OR LESS THAN 50 psig.	14.1 Isolate faulted SG(s) using ATTACHMENT 2.
___15	**Check core exit T/Cs - LESS THAN 1200°F.**	15 IF fifth hottest core exit T/C greater than 1200°F AND rising, THEN go to FNP-1-SACRG-1, SEVERE ACCIDENT CONTROL ROOM GUIDELINE INITIAL RESPONSE.

___Page Completed

Step	Action/Expected Response	Response NOT Obtained
	**********	
	CAUTION: Emergency boration should be continued until adequate shutdown margin is established.	
	**********	
___16	**Check if reactor still critical.** • Check power range indication - GREATER THAN OR EQUAL TO 5%. PR1(2,3,4) PERCENT FULL POWER [] NI 41B [] NI 42B [] NI 43B [] NI 44B OR • Check any intermediate range startup rate - POSITIVE. IR1(2) S/U RATE [] NI 35D [] NI 36D	16 Go to procedure and step in effect.
___17	**Continue emergency boration.**	17 Perform the following. 17.1 Determine if moderator temperature coefficient positive or negative. [] Core Physics Curve 5 17.2 IF moderator temperature coefficient negative, THEN allow RCS to heat up.

___Page Completed

Step	Action/Expected Response	Response NOT Obtained

NOTE: Actions of other Function Restoration Procedures in effect which will not add positive reactivity to the core may be performed while efforts to return the core to a subcritical condition continue.

___18 Return to step 4.

-END-

39. 029 G2.1.33 002/NEW//LOWER//SRO/FARLEY/11/2007/N0

Given the following:

- The plant is at 100% power.
- At 1100, Both Reactor Trip Breakers are declared inoperable due to common mode failure of the shunt trip mechanisms.
- The crew immediately initiates a plant shutdown.

Which ONE of the following describes the LATEST time the plant must be in Mode 3, and the LATEST time that the NRC must be notified?

	Mode 3	NRC Notification
A.	1700	1200
B.	1700	1500
C.	1800	1200
D✓	1800	1500

A is incorrect but plausible because 6 hours to hot standby is credible if the 1 hour preparation is not considered.

B is incorrect but plausible because of the same reason as A, except that the report is correct.

C is incorrect but credible because the shutdown time is correct.

D is correct.

Conduct of Operations: Ability to recognize indications for system operating parameters which are entry level conditions for technical specifications

Question Number: 79

Tier 1 Group 1

Importance Rating: SRO 4.0

Technical Reference: EIP-8, TS 3.0.3
Proposed references to be provided to applicants during examination: None
Learning Objective:
10 CFR Part 55 Content: 43.2

Comments:

Source :	NEW	Source if Bank:	
Cognitive Level:	LOWER	Difficulty:	
Job Position:	SRO	Plant:	FARLEY
Date:	11/2007	Previous NRC?:	N0

3.0 LIMITING CONDITION FOR OPERATION (LCO) APPLICABILITY

LCO 3.0.1	LCOs shall be met during the MODES or other specified conditions in the Applicability, except as provided in LCO 3.0.2, 3.0.7, and 3.0.8.
LCO 3.0.2	Upon discovery of a failure to meet an LCO, the Required Actions of the associated Conditions shall be met, except as provided in LCO 3.0.5 and LCO 3.0.6. If the LCO is met or is no longer applicable prior to expiration of the specified Completion Time(s), completion of the Required Action(s) is not required unless otherwise stated.
LCO 3.0.3	When an LCO is not met and the associated ACTIONS are not met, an associated ACTION is not provided, or if directed by the associated ACTIONS, the unit shall be placed in a MODE or other specified condition in which the LCO is not applicable. Action shall be initiated within 1 hour to place the unit, as applicable, in: a. MODE 3 within 7 hours; b. MODE 4 within 13 hours; and c. MODE 5 within 37 hours. Exceptions to this Specification are stated in the individual Specifications. Where corrective measures are completed that permit operation in accordance with the LCO or ACTIONS, completion of the actions required by LCO 3.0.3 is not required. LCO 3.0.3 is only applicable in MODES 1, 2, 3, and 4.
LCO 3.0.4	When an LCO is not met, entry into a MODE or other specified condition in the Applicability shall only be made: a. When the associated ACTIONS to be entered permit continued operation in the MODE or other specified condition in the Applicability for an unlimited period of time;

(continued)

10.0 Four-Hour 50.72 Reports [10CFR50.72(b)(2)].

If not reported as a declaration of an emergency class or as a one hour non emergency report, the NRC Operations Center and Corporate Duty Manager shall be notified by the Shift Manager or the FNP Duty Manager as soon as practical and in all cases within four hours of the occurrence of any of the following (Figure 1 will be used):

Notify the NRC resident in conjunction with this notification.

10.1 The initiation of any nuclear plant shutdown required by Technical Specifications. [10CFR50.72(b)(2)(i)]

10.2 Any event that results or should have resulted in Emergency Core Cooling System (ECCS) discharge into the reactor coolant system as a result of a valid signal except when the actuation results from and is part of a pre-planned sequence during testing or reactor operation. [(10CFR50.72(b)(2)(iv)(A)].

10.3 Any event or condition that results in actuation of the reactor protection system (RPS) when the reactor is critical except when the actuation results from and is part of a pre-planned sequence during testing or reactor operation. [10CFR50.72(b)(2)(iv)(B)]

10.4 Any event or discovery of any incident in which an attempt has been made or is believed to have been made to commit a theft or unlawful diversion of uranium or thorium. [10CFR40.64(c)(2)]

NOTE: Paragraph 10.4 also satisfies section 4.1 of the FNP Environmental Protection Plan.

10.5 Any event or situation related to the health and safety of the public or onsite personnel or to protection of the environment, for which a news release is planned or notification to other government agencies has been or will be made. [10CFR50.72(b)(2)(xi)] and [10CFR72.75(b)(2)]

Examples:

- An onsite fatality - See section 5 for possible additional reporting requirements.
- Inadvertent release of radioactively contaminated materials.
- Notification of governmental agencies required by FNP-0-AP-60.

40. 033 AK3.01 001/NEW//HIGHER//RO/FARLEY/10/2007/NO

Given the following:

- Unit 1 is in Mode 2, a reactor startup is in progress.
- Power is approximately $3E^{-9}$ Amps.
- Intermediate Range N-35 fails LOW.

Which ONE of the following describes the action required prior to repair of the channel, assuming the repair will take 4 hours, and the reason?

A. Maintain Mode 2 conditions with power >P-6 and <P-10.

Protection against an uncontrolled rod withdrawal is reduced.

B. Maintain Mode 2 conditions with power >P-6 and <P-10.

Protection against a Feed Water Break accident is reduced.

C✓ Decrease power to </=P-6 or raise power to >/= P-10.

Protection against an uncontrolled rod withdrawal is reduced.

D. Decrease power to </=P-6 or raise power to >/= P-10.

Protection against a Feed Water Break accident is reduced.

A is incorrect due to power level being incorrect.

B is incorrect due to power level being incorrect.

C is correct, with power in the IR and loss of 1 channel, TS 3.3.1 requires power to be >P-10 where the PR instruments are operable, or <P-6 where SR will be operable to provide protection against uncontrolled rod withdrawl (TS Basis).

D is incorrect due to incorrect accident. OTDT trips provide protection against a Feed Water Break accident Plausible, because the feedwater break has many similarities to the steam break which adds positive rectivity by cooling down the RCS.

Knowledge of the reasons for the following responses as they apply to the Loss of Intermediate Range Nuclear Instrumentation: Termination of startup following loss of intermediate- range instrumentation

Question Number: 58

Tier 1 Group 2

Importance Rating: 3.2

Technical Reference: TS 3.3.1 Function 4; A-181007 T5-1`
Proposed references to be provided to applicants during examination: none
Learning Objective:
10 CFR Part 55 Content: 41.10/43.2

Comments:

Source :	NEW	Source if Bank:	
Cognitive Level:	HIGHER	Difficulty:	
Job Position:	RO	Plant:	FARLEY
Date:	10/2007	Previous NRC?:	NO

FNP UNITS 1 AND 2

A-181007

TS-1

ACCIDENT ANALYSIS EVENT	SR FLUX	IR FLUX	PR FLUX	PR FLUX RATE	OTDT	OPDT
RCCA WITHDRAWAL FROM SUBCRITICAL	RT	RT	RT*	RT(3)		
RCCA WITHDRAWAL AT POWER			RT*		RT*	RT
RCCA DROPPED ROD (2)				RT(4)	RT	RT
BORON DILUTION	RT/ HFSAL	RT	RT*		RT*	RT
START UP OF INACTIVE LOOP			RT*			
FEEDWATER TEMPERATURE REDUCTION (1)			RT		RT	RT
EXCESSIVE FEEDWATER FLOW (2)			RT		RT	RT
EXCESSIVE LOAD INCREASE (2)			RT		RT	RT
LOSS OF FLOW/LOCKED ROTOR					RT	
LOSS OF LOAD/TURBINE TRIP					RT*	
LOSS OF NORMAL FEEDWATER						
LOSS OF AC POWER (LOSP)						
FEEDWATER LINE BREAK					RT	
STEAMLINE BREAK (CORE RESPONSE)			RT*		RT*	RT
RCCA EJECTION	RT	RT	RT*	RT*(3)		RT
LOSS OF COOLANT						
STEAM GENERATOR TUBE RUPTURE						RT
INADVERTENT ECCS			RT*			
RCS DEPRESSURIZATION					RT*	
STEAMLINE BREAK (MASS & ENERGY REL)					RT	

KEY

AFW - Auxiliary Feedwater
ESF - Engineered Safety Features
HFSAL - High Flux at Shutdown Alarm
M&E - Mass & Energy Release
RT - Reactor Trip
SI - Safety Injection
SLI - Steamline Isolation
TT/FWI - Turbine Trip/Feedwater Isolation

* Primary protective function (Those are

(1) No specific analysis performed for this no protection functions are identified as

(2) No primary protection function is iden reactor trip is not necessary for core

(3) High Positive Neutron Flux Rate.
(4) High Negative Neutron Flux Rate.
(5) Anticipatory Trip

Table 3.3.1-1 (page 1 of 8)
Reactor Trip System Instrumentation

	FUNCTION	APPLICABLE MODES OR OTHER SPECIFIED CONDITIONS	REQUIRED CHANNELS	CONDITIONS	SURVEILLANCE REQUIREMENTS	ALLOWABLE VALUE	TRIP SETPOINT
1.	Manual Reactor Trip	1,2	2	B	SR 3.3.1.12	NA	NA
		3 (a), 4 (a), 5 (a)	2	C	SR 3.3.1.12	NA	NA
2.	Power Range Neutron Flux						
	a. High	1,2	4	D	SR 3.3.1.1 SR 3.3.1.2 SR 3.3.1.7 SR 3.3.1.10 SR 3.3.1.14	≤ 109.4% RTP	≤ 109% RTP
	b. Low	1(b),2	4	E	SR 3.3.1.1 SR 3.3.1.8 SR 3.3.1.10 SR 3.3.1.14	≤ 25.4% RTP	≤ 25% RTP
3.	Power Range Neutron Flux Rate						
	a. High Positive Rate	1,2	4	D	SR 3.3.1.7 SR 3.3.1.10	≤ 5.4% RTP with time constant ≥ 2 sec	≤ 5% RTP with time constant ≥ 2 sec
	b. High Negative Rate	1,2	4	D	SR 3.3.1.7 SR 3.3.1.10	≤ 5.4% RTP with time constant ≥ 2 sec	≤ 5% RTP with time constant ≥ 2 sec
4.	Intermediate Range Neutron Flux	1(b), 2(c)	2	F,G	SR 3.3.1.1 SR 3.3.1.8 SR 3.3.1.10	≤ 40% RTP	≤ 35% RTP
		2(d)	2	H	SR 3.3.1.1 SR 3.3.1.8 SR 3.3.1.10	≤ 40% RTP	≤ 35% RTP

(a) With Reactor Trip Breakers (RTBs) closed and Rod Control System capable of rod withdrawal.
(b) Below the P-10 (Power Range Neutron Flux) interlocks.
(c) Above the P-6 (Intermediate Range Neutron Flux) interlocks.
(d) Below the P-6 (Intermediate Range Neutron Flux) interlocks.

ACTIONS

CONDITION	REQUIRED ACTION		COMPLETION TIME
D. (continued)	D.2.2	----------NOTE---------- Only required to be performed when the Power Range Neutron Flux input to QPTR is inoperable. ---------- Perform SR 3.2.4.2.	 Once per 12 hours
	OR		
	D.3	Be in MODE 3.	12 hours
E. One channel inoperable.	----------NOTE---------- The inoperable channel may be bypassed for up to 4 hours for surveillance testing of other channels. ----------		
	E.1	Place channel in trip.	6 hours
	OR		
	E.2	Be in MODE 3.	12 hours
F. THERMAL POWER > P-6 and < P-10 one Intermediate Range Neutron Flux channel inoperable.	F.1	Reduce THERMAL POWER to < P-6.	2 hours
	OR		
	F.2	Increase THERMAL POWER to > P-10.	2 hours

ACTIONS

CONDITION	REQUIRED ACTION		COMPLETION TIME
G. THERMAL POWER > P-6 and < P-10, two Intermediate Range Neutron Flux channels inoperable.	G.1	Suspend operations involving positive reactivity additions.	Immediately
	AND		
	G.2	Reduce THERMAL POWER to < P-6.	2 hours
H. THERMAL POWER < P-6, one or two Intermediate Range Neutron Flux channels inoperable.	H.1	Restore channel(s) to OPERABLE status.	Prior to increasing THERMAL POWER to > P-6
I. One Source Range Neutron Flux channel inoperable.	I.1	Suspend operations involving positive reactivity additions.	Immediately
J. Two Source Range Neutron Flux channels inoperable.	J.1	Open RTBs.	Immediately
K. One Source Range Neutron Flux channel inoperable.	K.1	Restore channel to OPERABLE status.	48 hours
	OR		
	K.2	Open RTBs.	49 hours

BASES

APPLICABLE SAFETY ANALYSES, LCO, and APPLICABILITY

b. Power Range Neutron Flux—High Negative Rate (continued)

In MODE 1 or 2, when there is potential for a multiple rod drop accident to occur, the Power Range Neutron Flux — High Negative Rate trip must be OPERABLE. In MODE 3, 4, 5, or 6, the Power Range Neutron Flux — High Negative Rate trip Function does not have to be OPERABLE because the core is not critical and DNB is not a concern.

4. Intermediate Range Neutron Flux

The Intermediate Range Neutron Flux trip Function ensures that protection is provided against an uncontrolled RCCA bank rod withdrawal accident from a subcritical condition during startup. This trip Function provides diverse protection to the Power Range Neutron Flux — Low Setpoint trip Function. The NIS intermediate range detectors are located external to the reactor vessel and measure neutrons leaking from the core. The NIS intermediate range channels also provide a control interlock signal to prevent automatic and manual rod withdrawal prior to initiating a reactor trip. Limiting further rod withdrawal may terminate the transient and eliminate the need to trip the reactor. No credit is taken in the safety analyses for this trip function.

The LCO requires two channels of Intermediate Range Neutron Flux to be OPERABLE. Two OPERABLE channels are sufficient to ensure no single random failure will disable this trip Function. The trip function is accomplished by a 1-out-of-2 trip Logic.

Because this trip Function is important only during startup, there is generally no need to disable channels for on-line testing while the Function is required to be OPERABLE. Therefore, a third channel is unnecessary.

In MODE 1 below the P-10 setpoint, and in MODE 2, when there is a potential for an uncontrolled RCCA bank rod withdrawal accident during reactor startup, the Intermediate Range Neutron Flux trip must be OPERABLE. Above the P-10 setpoint, the Power Range Neutron Flux — High Setpoint trip and the Power Range Neutron Flux — High Positive Rate trip provide core protection for a rod

(continued)

BASES

APPLICABLE SAFETY ANALYSES, LCO, and APPLICABILITY

4. Intermediate Range Neutron Flux (continued)

withdrawal accident. In MODE 3, 4, or 5, the Intermediate Range Neutron Flux trip does not have to be OPERABLE because the control rods must be fully inserted and only the shutdown rods may be withdrawn. The reactor cannot be started up in this condition. The core also has the required SDM to mitigate the consequences of a positive reactivity addition accident. In MODE 6, all rods are fully inserted and the core has a required increased SDM.

5. Source Range Neutron Flux

The LCO requirement for the Source Range Neutron Flux trip Function ensures that protection is provided against an uncontrolled RCCA bank rod withdrawal accident from a subcritical condition during startup. This trip Function provides diverse protection to the Power Range Neutron Flux — Low Setpoint trip Function. In MODES 3, 4, and 5, administrative controls also prevent the uncontrolled withdrawal of rods. The NIS source range detectors are located external to the reactor vessel and measure neutrons leaking from the core. The NIS source range detectors do not provide any inputs to control systems. The source range trip is the only RTS automatic protection function required in MODES 3, 4, and 5. Therefore, the functional capability at the specified Trip Setpoint is assumed to be available. However, no credit is taken in the safety analyses for this trip function.

The LCO requires two channels of Source Range Neutron Flux to be OPERABLE. Two OPERABLE channels are sufficient to ensure no single random failure will disable this trip Function. The trip Function is accomplished by a 1-out-of-2 trip Logic. The LCO also requires one channel of the Source Range Neutron Flux to be OPERABLE in MODE 3, 4, or 5 with RTBs open. In this case, the source range Function is to provide control room indication. The outputs of the Function to RTS logic are not required OPERABLE when the RTBs are open.

(continued)