NMC
Committed to Nuclear Excellence

Point Beach Nuclear Plant
Operated by Nuclear Management Company, LLC

NRC 2003-0018 10 CFR 50.12

March 3, 2003

U.S. Nuclear Regulatory Commission
ATTN: Document Control Desk
Washington, DC 20555

DOCKETS 50-266 AND 50-301
POINT BEACH NUCLEAR PLANT, UNITS 1 AND 2
REQUEST FOR EXEMPTIONS TO 10 CFR 50.61, APPENDICES G AND H TO 10 CFR 50, AND APPROVAL OF PTS APPLICATION FOR PBNP UNIT 2 AND PROPOSED HEATUP AND COOLDOWN LIMIT CURVES FOR PBNP UNITS 1 AND 2

In accordance with the provisions of 10 CFR 50.12, "Specific Exemptions", Nuclear Management Company, LLC (NMC) is submitting a request for permanent exemption from certain requirements of 10 CFR 50.61, "Fracture Toughness Requirements for Protection Against Thermal Shock Events", 10 CFR 50, Appendix G, "Fracture Toughness Requirements", and 10 CFR 50, Appendix H, "Reactor Vessel Material Surveillance Program Requirements", for the Unit 2 reactor vessel. Attachment 1 to this letter provides the justification for this exemption request. Attachment 2 provides a summary of the regulatory commitments made in this submittal.

The requested exemptions would allow use of a different method, the Master Curve Methodology, for determining the adjusted RT_{NDT} (reference nil-ductility temperature) of the Point Beach Nuclear Plant Unit 2 (PBNP Unit 2) reactor vessel limiting circumferential weld metal. This method is used for the Pressurized Thermal Shock (PTS) screening evaluation. The NRC granted similar exemptions to the Kewaunee Nuclear Power Plant on February 21, 2001 (TAC NO. MA 8585).

In association with this request for exemptions, NMC has reassessed PBNP Unit 2 compliance with 10 CFR 50.61 for end of license (EOL) conditions. The new PTS evaluation is provided in ATI Consulting Report 021-030-2003-1, "Master Curve Fracture Toughness Application for Point Beach Nuclear Plant Unit 2", dated January 2003. A copy of the ATI Consulting report is provided as Enclosure 1.

NMC hereby requests the NRC to review and approve the revised PTS evaluation at EOL for Unit 2.

To demonstrate consistency with the Master Curve Methodology used in the PTS evaluation for Unit 2, NMC has also reassessed the PBNP Units 1 and 2 compliance with 10 CFR 50.60 Appendix G for EOL. Enclosure 2 to this letter is a copy of WCAP-15976, Revision 0, "Point Beach Units 1 and 2 Heatup and Cooldown Limit Curves for Normal Operation", dated February 2003, which provides new 34 EFPY (EOL) pressure and temperature limit curves (P/T curves).

6590 Nuclear Road • Two Rivers, Wisconsin 54241
Telephone. 920.755 2321

A001
A008

NMC hereby requests the NRC to review and approve the new P/T curves at EOL for Units 1 and 2.

It is noted that although the Master Curve toughness application for the PBNP Unit 2 limiting circumferential weld has been considered in the P/T curve evaluation, there is no effect on the resulting P/T curves since the limiting materials for these curves are the intermediate and lower shell axial welds from PBNP Unit 1.

NMC requests approval of these exemptions by October 2003. The currently calculated fluence values for operation of Unit 1 are valid until October 30, 2003 and are valid for Unit 2 until October 1, 2008. The currently approved methodology can be used to extend the effective date; however, the exemptions are desired prior to expiration of these values to allow issuance of the new P/T curves should consideration of the new Master Curve methodology be required.

Prior to crediting use of the new P/T curves, a revised reference in PBNP Technical Specifications (TS) 5.6.5, Reactor Coolant System (RCS) Pressure and Temperature Limits Report will be needed. A license amendment request to affect this administrative change in TS 5.6.5 will be submitted separately.

I declare under penalty of perjury that the foregoing is true and correct.
Executed on March 3, 2003.

A. J. Cayia
Site Vice President

LAS/kds

Attachment:	1	Justification for Exemption Request
	2	List of Regulatory Commitments
Enclosures:	1	ATI Consulting Report 021-030-2003-1, January 2003
	2	WCAP-15976, February 2003

cc: (w/ enclosures)
Project Manager, Point Beach Nuclear Plant, NRR, USNRC

(w/o enclosures)
Regional Administrator, Region III, USNRC
NRC Resident Inspector - Point Beach Nuclear Plant
PSCW

JUSTIFICATION FOR

EXEMPTION REQUEST

POINT BEACH NUCLEAR PLANT, UNITS 1 AND 2

1.0 INTRODUCTION

In accordance with the provisions of 10 CFR 50.12, "Specific Exemptions", Nuclear Management Company, LLC (NMC) is submitting a request for exemption from certain requirements of 10 CFR 50.61, "Fracture Toughness Requirements for Protection Against Thermal Shock Events", 10 CFR 50, Appendix G, "Fracture Toughness Requirements", and 10 CFR 50, Appendix H, "Reactor Vessel Material Surveillance Program Requirements". The requested exemptions would allow a different method, the Master Curve Methodology, for determining the adjusted RT_{NDT} (reference nil-ductility temperature) of the Point Beach Nuclear Plant Unit 2 (PBNP Unit 2) reactor vessel limiting circumferential weld metal. This method is used for the Pressurized Thermal Shock (PTS) screening evaluation.

2.0 BACKGROUND

10 CFR 50.60 and 10 CFR 50.61 establish criteria that ensure that each reactor vessel has adequate fracture toughness. When these rules were first promulgated fracture toughness specimens were too large to be used in reactor vessel radiation surveillance capsule programs. Therefore, smaller Charpy V-notch specimens were used to estimate and monitor fracture toughness.

The latest Charpy-based toughness evaluation following current regulations for the PBNP Unit 2 limiting circumferential weld metal indicates that the projected value of RT_{PTS} at end-of-license (EOL) is close to (but below) the pressurized thermal shock (PTS) screening criterion of 300°F (10 CFR 50.61). For bounding and evaluation purposes, conditions at end of license extended (EOLE) were also projected. The PTS screening criteria will be exceeded for the projected EOLE fluence, which assumes removal of hafnium fluence suppression assemblies and planned power up-rates. Therefore, NMC performed a bounding evaluation of Master Curve fracture toughness data for assuring reactor pressure vessel (RPV) integrity for PBNP Unit 2 at EOL and out to EOLE. This application represents the second use of the Master Curve Methodology in the nuclear industry for a reactor pressure vessel with a beltline weld as the limiting material. The Kewaunee Nuclear Power Plant, also operated by NMC, was the first application.

This document summarizes the technical basis and justifications for the exemption requests to use ASME Code Cases N-629 and N-631, ASTM E185-98, ASTM E-1921-02, and the methodology described in ATI Consulting Report 021-030-2003-1 for establishing EOL and EOLE indexing reference temperature values for assessment of the integrity of the PBNP Unit 2 reactor vessel.

3.0 PROPOSED EXEMPTIONS

The three exemptions requested by NMC address portions of the following regulations:

(1) Appendix G to 10 CFR Part 50, which sets forth fracture toughness requirements for ferritic materials of pressure-retaining components of the reactor coolant pressure boundary of light water nuclear power reactors to provide adequate margins of safety during any condition of normal operation, including anticipated operational occurrences and system hydrostatic tests, to which the system may be subjected over its service lifetime;

(2) 10 CFR 50.61, which sets forth fracture toughness requirements for protection against pressurized thermal shock (PTS); and

(3) Appendix H to 10 CFR Part 50, which requires the establishment of a RPV material surveillance program.

The exemption from Appendix G to 10 CFR 50 is to replace the required use of the existing Charpy V-notch and drop-weight-based methodology and allow the use of an alternate methodology to incorporate the use of fracture toughness test data for evaluating the integrity of the PBNP Unit 2 circumferential beltline weld based on use of the 2002 Edition of American Society for Testing and Materials (ASTM) Standard Method E 1921 (E 1921-02) and American Society for Mechanical Engineering (ASME) Code Case N-629. The exemption is required since Appendix G to Section XI of the ASME Code pursuant to 10 CFR 50.55(a) requires the use of a methodology based on Charpy V-notch and drop weight data.

The exemption from 10 CFR 50.61 is to use an alternate methodology to allow the use of fracture toughness test data for evaluating the integrity of the PBNP Unit 2 limiting circumferential beltline weld based on the use of ASTM E 1921-02 and ASME Code Case N-629. The exemption is required because the methodology for evaluating RPV material fracture toughness in 10 CFR 50.61 requires the use of Charpy V-notch and drop weight data for establishing the PTS reference temperature (RT_{PTS}).

Finally, the exemption from Appendix H to 10 CFR 50 is to modify the basis for the PBNP Unit 2 surveillance program to allow the acquisition and use of fracture toughness data instead of the Charpy V-notch impact testing required by Appendix H to 10 CFR 50. The exemption is required because Appendix H to 10 CFR 50 does not address the testing of surveillance specimens for direct measurement of fracture toughness. A second reason for the exemption relates to a supplemental surveillance capsule. Due to the need for additional fracture toughness data for the PBNP Unit 2 weld metal at fluence levels extending out to EOLE, a supplemental capsule has been added to the surveillance program for PBNP Unit 2. This capsule has been installed in the highest lead factor location and includes other RPV beltline materials. The capsule is designed for Master Curve fracture toughness testing and evaluation at the projected EOLE fluence, so that the integrity of the RPV will be directly validated with the testing of this capsule should extended operation be considered. The composition of materials, specimen types, and estimated schedule for removal of this new capsule are addressed in ATI Consulting Report 021-030-2003-1.

A tabular summary of the requested exemptions and the proposed alternatives are shown below.

Description	Existing Requirement	Proposed Alternative
Determination of adjusted/indexing reference temperatures	10 CFR 50.61 and Appendix G to 10 CFR Part 50	ASME Code Case N-629, ASME Code Case N-631, ATI Consulting Report 021-030-2003-1, and WCAP-15976
Use of the latest edition of ASTM E185-98	App H to Part 50 specifies use of ASTM E185-73,-79, -82 for testing of surveillance materials	(1) ASTM E185-98 allows use of ASTM E1921-02 for testing of surveillance capsule material; (2) Use fracture toughness surveillance data from PBNP Unit 2 supplemental surveillance capsule for verification of EOLE toughness properties
Alternative testing methods for determination of fracture toughness	Appendices G and H to Part 50 specifies Charpy V-Notch impact and drop weight testing	ASTM E1921-02, ATI Consulting Report 021-030-2003-1 and WCAP-15976

4.0 TECHNICAL ANALYSIS

The attached ATI Consulting Report 021-030-2003-1 provides the detailed technical analysis and basis for the Master Curve application at PBNP Unit 2. A general summary is presented here.

The PBNP Unit 2 RPV limiting weld metal heat 72442 was not included in the current surveillance program for PBNP Unit 2, but it was irradiated as part of the B&W Owners Group integrated surveillance program. The latest projections based on Charpy impact testing, when analyzed following NRC guidelines and rules, indicate that this weld will reach the PTS screening criterion limit before EOLE. Therefore, fracture toughness testing of other irradiated surveillance specimens (from two different welds fabricated using weld wire 72442) has been performed and analyzed using the Master Curve methodology following ASME Code Cases N-629 and N-631. The evaluation performed involves extrapolation to EOL and EOLE fluences and shows that the RPV limiting weld metal has more than adequate toughness for operation out to EOLE and beyond. These projections will be confirmed by additional testing of weld heat 72442 from the B&W Owners Group Master Integrated Reactor Vessel Materials Surveillance Program (MIRVP) prior to reaching the EOL fluence at PBNP Unit 2. A supplemental surveillance program will be designed and implemented at PBNP Unit 2 that includes the limiting weld metal for future evaluation using the Master Curve methodology. Should extended operation be considered, the testing of this supplemental capsule at a fluence corresponding to EOLE will confirm the toughness condition for the PBNP Unit 2 RPV weld at about 38 EFPY, which is well before EOLE is reached.

The following observations and conclusions are documented in the attached ATI Consulting Report 021-030-2003-1 for the PBNP Unit 2 limiting beltline weld metal:

- The latest Charpy-based toughness evaluation following current regulation for the PBNP Unit 2 limiting circumferential weld metal indicates that the PTS screening criterion of 300°F will be reached before EOLE when future plant operation is considered (removal of hafnium fluence suppression and planned power up-rates).
- Application of the Master Curve methodology for the PBNP Unit 2 weld metal requires extrapolation (from the three available surveillance irradiations) to the RPV EOLE fluence. The extrapolation can be performed following several different approaches. Three approaches were evaluated: (1) use of measured initial RT_{To} and adding Charpy shift; (2) use of measured initial RT_{To} and adding the shift in RT_{To} due to irradiation; and (3) use of the measured irradiated RT_{To} values directly without projection from zero fluence. All methods show that the EOLE RT_{PTS} value is less than the PTS screening limit of 300°F. Method 1 somewhat follows the current regulatory practice and is the most conservative. Method 2 was evaluated following the Kewaunee SE, and the resulting projections in ART were substantially less than Method 1. Method 3 is the most accurate method, and the results obtained applying this direct measurement approach reveal that Method 2 is quite conservative.
- The Margin term was chosen depending upon the analysis approach discussed above. For Method 1, Margin was based on three uncertainties: material variability based on a Monte Carlo study from BAW-2308 of weld heat 72442 non-irradiated data (σ_{MC} = 9.3°F), the uncertainty in determining T_o from ASTM E 1921-02 (σ_{To} = 7.4°F), and the current regulatory value for weld metal Charpy shift (σ_{Δ} = 28°F); σ_{MC} and σ_{To} are combined to give a measure of the uncertainty in initial properties (σ_I = 11.9°F). Method 2 used the Margin specified by the NRC in the Kewaunee SE, which used a larger σ_I (14°F) and the same σ_{Δ} of 28°F. Method 3 used a more complete uncertainty analysis: material variability (σ_{MC} = 9.3°F as above), determination of irradiated T_o (σ_{To} = 10.7°F), Cu content (σ_{Cu} = 1.6-1.7°F), Ni content (σ_{Ni} = 4.1-4.2°F), irradiation temperature (σ_{Tirr} = 6.9-8.9°F), fluence ($\sigma_{\phi t}$ = 13.2-12.5°F), and fluence projection (σ_{Proj} = 1.0-1.6°F). Remaining consistent with industry practice, an approximate 95% statistical level (or two sigma) Margin was chosen, where the individual uncertainties were combined as the square root sum of the squares.
- Since there was a need to extrapolate to higher fluence levels (higher than where current fracture toughness measurements exist) to assess PTS and pressure-temperature operating curves, the current Regulatory fluence function for CVN-based predictions was used for the Master Curve approach.
- The supplemental surveillance program utilizes irradiation of the limiting weld metal heat in a new capsule that will be available for testing near the time corresponding to 38 EFPY for the RPV. The direct measurement of fracture toughness for key weld metal will be evaluated at a fluence near to the projected EOLE. Fracture toughness data from the B&W Owners Group on this same weld metal will be available around 2008. This B&W Owners Group data should correspond closely to the PBNP Unit 2 EOL fluence for the limiting RPV weld.

Conclusion

Use of the Master Curve methodology, extrapolated to EOL and EOLE fluences, shows that the RPV limiting weld metal meets PTS screening criteria out to EOLE and beyond. These projections will be confirmed by additional testing of weld heat 72442 from the B&W Owners Group MIRVP prior to reaching the EOL fluence at PBNP Unit 2. A supplemental surveillance program will be designed and implemented at PBNP Unit 2 that includes the limiting weld metal for future evaluation using the Master Curve methodology. Should extended operation be considered, the testing of this supplemental capsule at a fluence corresponding to EOLE will confirm the toughness condition for the PBNP Unit 2 RPV weld at about 38 EFPY, which is well before EOLE is reached.

5.0 REGULATORY ANALYSIS

5.1 No Significant Impact Determination and Environmental Evaluation

In accordance with the provisions of 10 CFR 50.12, "Specific Exemptions", Nuclear Management Company, LLC (NMC) is submitting a request for exemption from certain requirements of 10 CFR 50.61, "Fracture Toughness Requirements for Protection Against Thermal Shock Events", 10 CFR 50, Appendix G, "Fracture Toughness Requirements", and 10 CFR 50, Appendix H, "Reactor Vessel Material Surveillance Program Requirements". The requested exemptions would allow a different method, the Master Curve Methodology, for determining the adjusted RT_{NDT} (reference nil-ductility temperature) of the PBNP Unit 2 reactor vessel limiting circumferential weld metal. This method is used for the Pressurized Thermal Shock (PTS) screening evaluation.

NMC has evaluated the proposed exemption against the criteria in 10 CFR 51.32 and has determined that the operation of PBNP in accordance with the proposed exemption presents no significant impact. Use of the Master Curve methodology, which has previously been approved by the Commission for use at the nearby Kewaunee Nuclear Power Plant, shows that the RPV limiting weld metal meets PTS screening criteria. The underlying purpose of 10 CFR 50.61 and Appendices G and H to 10 CFR 50, which is to establish criteria that ensure that each reactor vessel has adequate fracture toughness, continues to be achieved.

Operation of PBNP in accordance with the proposed exemption will not significantly increase the probability or consequences of accidents, no changes are being made in the types of effluents that may be released off site, and there is no significant increase in occupational or public radiation exposure. Therefore, operation of PBNP in accordance with the proposed exemption does not result in any significant radiological environmental impacts.

With regard to potential nonradiological impacts, the proposed action does not have a potential to affect any historic sites. It does not affect nonradiological plant effluents and has no other environmental impact. Therefore, there are no significant nonradiological environmental impacts associated with the proposed action.

Conclusion

Since there are no significant radiological or nonradiological environmental impacts associated with the proposed action, we conclude that the proposed exemption will not have a significant effect on the quality of the human environment. Therefore, as provided in 10 CFR 51.32, an environmental impact statement need not be prepared.

5.2 Commitments

The actions committed to by NMC in this document are listed in Attachment 2. Any other statements in this submittal are provided for information purposes and are not considered to be regulatory commitments.

5.3 Applicable Regulatory Requirements

10 CFR 50.12(a) states that the Commission may grant exemptions from the requirements of the regulations contained in 10 CFR 50 that are:

(1) authorized by law;
(2) will not present an undue risk to the public health and safety;
(3) consistent with the common defense and security; and
(4) special circumstances, as listed in 10 CFR 50.12(a)(2), are present.

This exemption request meets the criteria set forth in 10 CFR 50.12, as discussed herein. Additional technical bases for the proposed exemptions are provided as Enclosure 1 to this letter.

1. <u>The requested exemption is authorized by law.</u>

   No law exists which precludes the activities covered by this exemption request. 10 CFR 50.60(b) allows the use of alternatives to 10 CFR 50, Appendices G and H when an exemption is granted by the Commission under 10 CFR 50.12.

2. <u>The requested exemption does not present an undue risk to the public health and safety</u>.

   10 CFR 50 Appendices G and H specify that surveillance capsules shall be tested in accordance with ASTM E 185-73, -79, and -82. The latest version of ASTM E-185-98 encourages that supplemental fracture toughness testing be conducted in accordance with procedures and requirements of Practice E636, Method E-1820, or Method E-1921 when the surveillance materials exhibit marginal properties. Fracture toughness testing of weld metal heat 72442 has been performed to satisfy the requirements established in accordance with ASTM E-1921.

   The use of this proposed approach ensures that the intent of the requirements specified in 10 CFR 50.61 are satisfied. Therefore, this exemption does not present an undue risk to the public health and safety.

3. <u>The requested exemption is consistent with the common defense and security</u>.

   The common defense and security are not endangered by this exemption request.

4. Special circumstances are present which necessitate the request for an exemption to the regulations of 10 CFR 50.61.

Pursuant to 10 CFR 50.12(a)(2), the Commission will consider granting an exemption to the regulations of 10 CFR 50 if special circumstances are present. This exemption request meets the special circumstances described in 10 CFR 50.12(a)(2)(ii):

> Application of the regulation in the particular circumstances would not serve the underlying purpose of the rule or is not necessary to achieve the underlying purpose of the rule.

The underlying purpose of 10 CFR 50.61 and Appendix G to 10 CFR 50 is to establish criteria that ensure that each reactor vessel has adequate fracture toughness. Westinghouse Electric Corporation and ATI Consulting have prepared the enclosed reports to assess and document the integrity of the PBNP Unit 2 reactor vessel relative to the requirements and underlying purpose of 10 CFR 50.61, and Appendices G and H to 10 CFR 50. These reports provide the technical justification for the exemption requests. ATI Consulting Report 021-030-2003-1 provides an updated PTS evaluation using Master Curve methodology for PBNP Unit 2, showing compliance with PTS screening criteria through EOLE. Should extended operation be considered, a supplemental surveillance program to validate EOLE fracture toughness properties is also described. For consistency, the Master Curve methodology has been considered in the development of updated P/T curves for PBNP Units 1 and 2, presented in WCAP15976. Together, these reports demonstrate that the alternate methodology (Master Curve methodology) achieves the underlying purposes of the regulatory rules from which exemptions are requested; therefore, the exemption requests are justified.

LIST OF REGULATORY COMMITMENTS

The following table identifies those actions committed to by NMC in this document. Any other statements in this submittal are provided for information purposes and are not considered to be regulatory commitments.

COMMITMENTS	Due Date/Event
NMC will supplement this submittal with a license amendment request to revise the reference in PBNP Technical Specifications (TS) 5.6.5, Reactor Coolant System (RCS) Pressure and Temperature Limits Report.	April 2003
NMC will confirm the projections for the RPV limiting weld metal by additional testing of weld heat 72442 from the B&W Owners Group Master Integrated Reactor Vessel Materials Surveillance Program.	Prior to reaching the EOL fluence at PBNP Unit 2 06/2010
NMC will design and implement a supplemental surveillance program at PBNP Unit 2 that includes the limiting weld metal for future evaluation using the Master Curve methodology.	02/2006
Should extended operation be considered, NMC will test the supplemental capsule at a fluence corresponding to EOLE to confirm the toughness condition for the PBNP Unit 2 RPV weld at about 38 EFPY, which is well before EOLE is reached.	Should extended operation be considered

FINAL REPORT ATI-021-030-2003-1

MASTER CURVE FRACTURE TOUGHNESS APPLICATION FOR POINT BEACH NUCLEAR PLANT UNIT 2

ATI Consulting
W. L. Server
J. R. Pfefferle

January 2003

ATI Consulting
6773 Sierra Court, Suite C
Dublin, CA 94568

EXECUTIVE SUMMARY

The latest Charpy-based toughness evaluation following current regulations for the Point Beach Nuclear Plant, Unit 2 (PBNP-2) limiting circumferential weld metal indicates that the pressurized thermal shock (PTS) screening criterion of 300°F (10 CFR 50.61) is close to the projected value of RT_{PTS} at end-of-life (EOL), but will be exceeded before end-of-life extension (EOLE) when future plant operation is considered (removal of hafnium flux reduction and planned power up-rates). This report summarizes application of Master Curve fracture toughness data for assuring reactor pressure vessel (RPV) integrity for PBNP-2 at EOL and out to EOLE. This application represents the second use of the Master Curve Methodology in the nuclear industry for a reactor pressure vessel with a beltline weld as the limiting material. The Kewaunee Nuclear Power Plant, also operated by Nuclear Management Company, LLC, was the first application. The fracture toughness data for the limiting weld metal presented in this report were generated in part under the B&W Owners Group Master Integrated Reactor Vessel Surveillance Program and additionally funded by Nuclear Management Company, LLC.

The Kewaunee Nuclear Power Plant received approval from the Nuclear Regulatory Commission to apply the Master Curve Methodology using the ASME Code alternative RT_{To} indexing parameter for the limiting weld metal in that RPV. EPRI has published two support documents (EPRI TR-1000707 and EPRI TR-108390, Rev. 1) endorsing and validating the use of the Master Curve approach. These documents provide the technical bases for ASME Code Cases N-629 and N-631 in which the alternative reference temperature, RT_{To}, is defined and used.

This report provides a summary of the RT_{To} methodology used to determine the adjusted reference temperature (ART) for the irradiated RPV weld metal in PBNP-2. Three approaches were evaluated: (1) use of measured initial RT_{To} and adding Charpy shift; (2) use of measured initial RT_{To} and adding the shift in RT_{To} due to irradiation; and, (3) use of the measured irradiated RT_{To} values directly projecting from the measured data to higher fluence levels. All three methods show that the EOLE RT_{PTS} value is less than the PTS screening limit of 300°F. Method 1 follows the current regulatory practice except use of the initial non-irradiated RT_{To}, and is the most conservative. Method 2 follows the NRC evaluation in the Kewaunee SE, and the resulting projections in ART are substantially less than Method 1. Method 3 is the most accurate method, and the results obtained applying this direct measurement approach reveal that Method 2 is quite conservative. Several key technical areas are addressed in this report; a bias correction for three-point bend fracture toughness specimens, accuracy and variability of T_o values measured using ASTM E1921-02 and Monte Carlo simulations, and development of a margin approach for RT_{To} for all three methods that is consistent and meets the intent of current regulatory methods.

Due to the need for additional fracture toughness data for the PBNP-2 weld metal at fluence levels extending out to EOLE, a supplemental capsule has been added to surveillance program for PBNP-2. This capsule has been installed in the highest lead

factor location and includes other RPV beltline materials. The capsule is designed for Master Curve fracture toughness testing and evaluation at the projected EOLE fluence, so that the integrity of the RPV will be directly validated with the testing of this capsule. The composition of materials, specimen types, and estimated schedule for removal of this new capsule are addressed in this report. Additional fracture toughness data on weld heat 72442 from the B&W Owners Group also will be available around 2008, which will provide results at an intermediate fluence results near EOL.

The projections for PTS are provided in this report based on applying the Master Curve methodology to the limiting weld. Using this methodology, the PBNP-2 RPV is projected to stay below the PTS screening criteria through and beyond EOLE. These PTS projections are based on the most limiting assumptions for future plant operation, including a substantial upgrade of thermal power and removal of hafnium flux reduction assemblies from future core designs.

ACKNOWLEDGMENTS

The authors wish to acknowledge the help of Brian Burgos of ATI Consulting and Randy Lott of Westinghouse Electric Company, LLC in helping to consolidate the fracture toughness test data and in reviewing technical details in this document.

TABLE OF CONTENTS

EXECUTIVE SUMMARY i

ACKNOWLEDGMENTS iii

LIST OF TABLES v

LIST OF FIGURES vii

1 INTRODUCTION 1-1

2 REVIEW OF CVN-BASED PTS STATUS FOR PBNP-2 2-1
- 2.1 REVIEW OF BELTLINE MATERIALS AND FLUENCES 2-1
- 2.2 ART PROJECTIONS FOR EOL AND EOLE 2-2

3 FRACTURE TOUGHNESS TESTING AND RESULTS 3-1

4 APPLICATION OF FRACTURE TOUGHNESS RESULTS TO PBNP-2 4-1
- 4.1 MASTER CURVE APPLICATION METHODOLOGIES 4-1
- 4.2 MEASURED INITIAL RT_{To} AND CHARPY-SHIFT APPROACH 4-3
- 4.3 MEASURED INITIAL RT_{To} AND RT_{To}-SHIFT APPROACH 4-4
- 4.4 DIRECT MEASUREMENT OF IRRADIATED RT_{To} 4-7

5 SUMMARY OF SUPPLEMENTAL SURVEILLANCE PROGRAM 5-1
- 5.1 HISTORY OF EXISTING PROGRAM 5-1
- 5.2 REVIEW OF REMAINING CAPSULES 5-1
- 5.3 DESCRIPTION OF NEW SUPPLEMENTAL SURVEILLANCE CAPSULE 5-2
- 5.4 SUPPLEMENTAL CAPSULE IRRADIATION AND WITHDRAWAL SCHEDULE 5-2

6 SUMMARY AND CONCLUSIONS 6-1

7 REFERENCES 7-1

LIST OF TABLES

Table 2-1	Summary of the PBNP-2 RPV Beltline Materials	2-4
Table 2-2	Projections for Fluence for the PBNP-2 RPV at EOL and EOLE	2-4
Table 2-3	Summary of Weld Wire 72442 Cu/Ni Measurements	2-5
Table 2-4	ART/RT_{PTS} Projections at EOL (34 EFPY) Based on CVN Methodology for the PBNP-2 RPV	2-7
Table 2-5	ART/RT_{PTS} Projections at EOLE (53 EFPY) Based on CVN Methodology for the PBNP-2 RPV	2-8
Table 3-1	Fracture Toughness Testing for Weld Heat 72442	3-3
Table 3-2	Test Results for Unirradiated Weld Metal SA-1484 (0.394T-3PB Specimens, No Sidegrooves)	3-3
Table 3-3	Test Results for Irradiated Weld Metal SA-1484, Capsule DB-A3	3-4
Table 3-4	Test Results for Unirradiated Weld Metal WF-67 (50 Hour Stress Relief)	3-5
Table 3-5	Test Results for Unirradiated Weld Metal WF-67 (11 Hour Stress Relief) (0.394T-3PB Specimens, No Sidegrooves)	3-5
Table 3-6	Test Results for Irradiated Weld Metal WF-67, Capsule DB-L1	3-6
Table 3-7	Test Results for Irradiated Weld Metal WF-67, Capsule CR3-LG2	3-6
Table 3-8	T_o Determinations from Measured Fracture Toughness Data for Weld 72442	3-7
Table 3-9	Comparison of T_o Values from Different Specimen Types with No Bias Correction for Weld 72442	3-7
Table 4-1	Comparisons of Reference Temperature Methods and Results	4-11
Table 4-2	NRC Method for Correcting ΔRT_{To} Values for Chemistry and Irradiation Temperature Differences	4-12
Table 4-3	ASTM E 900-02 Corrections of ΔRT_{To} Values for Chemistry and Irradiation Temperature Differences	4-12

Table 4-4	Summary of ΔRT_{To} Values Corrected for Differences in Chemistry and Irradiation Temperature and Calculation of CF_{To}	4-12
Table 4-5	NRC Method for Determining ART at EOL Fluence	4-13
Table 4-6	NRC Method for Determining ART at EOLE Fluence	4-13
Table 4-7	Calculations of Prediction Uncertainties for ASTM E 900 Model Parameters at EOL and EOLE	4-13
Table 5-1	PBNP-2 Surveillance Program	5-4
Table 5-2	Types and Number of Specimens in the PBNP-2 Surveillance Test Capsules	5-4
Table 5-3	Remaining MIRVP Capsules Containing Heat 72442	5-5
Table 5-4	PBNP-2 and Other Materials and Specimen Types in Supplemental Capsule	5-5
Table 5-5	PBNP-2 Fuel Cycles and Estimated Surveillance Capsule Fluence	5-6

LIST OF FIGURES

Figure 4-1 Comparisons of Projected ART from Master Curve Methods and Charpy Methodologies for Weld Wire 72442 (Measured Master Curve Data Do Not Have Margin Added) 4-14

Figure 5-1 Arrangement of Surveillance Capsules in the Reactor Vessel 5-7

1 INTRODUCTION

Nuclear Management Company, LLC (NMC) currently operates Point Beach Nuclear Plant Unit 2 (PBNP-2). The operators of this nuclear power plant have proactively assessed its condition relative to reactor pressure vessel (RPV) neutron embrittlement over the years of operation. Surveillance Charpy V-notch (CVN) testing of the limiting vessel circumferential weld metal, contained in the integrated surveillance capsule program and irradiated in the B&W Owners Group program, has shown a high degree of neutron embrittlement. These results have led to projections of end-of-life (EOL) reference toughness, termed RT_{PTS}, that approach the pressurized thermal shock (PTS) screening criterion of 300°F in the Code of Federal Regulations, 10 CFR 50.61 [1]. For EOL extension (EOLE), the latest projections of RT_{PTS} exceed the screening criterion. Section 2 of this report summarizes the projection of CVN results for the PBNP-2 limiting weld metal and other beltline materials.

In an attempt to control the embrittlement of the RPV weld metal at the peak flux locations, flux reduction methods were employed at PBNP-2 using hafnium rods in the peripheral fuel bundles. These localized flux reduction measures have forced a non-optimum core flux profile and dramatically increased fuel cycle costs. Recently, NMC began consideration of the elimination of the hafnium flux reduction, since embrittlement projections with the hafnium removed demonstrate that the beltline weld metal will meet the PTS screening criterion for the current EOL corresponding to 34 effective full power years (EFPY). For an end-of-life extension (EOLE) operating period of 53 EFPY, even with hafnium flux reduction left in the core, the PBNP-2 RPV will not meet the PTS screening criterion using the current CVN-based technology. Use of the Master Curve approach will provide assurance that the PBNP-2 RPV will be in compliance with the PTS rule through EOLE. For current operating life, the use of the Master Curve methodology for the evaluation of material toughness properties provides additional margin for PTS, and this same methodology has been considered in new heat-up and cool-down curves [2].

To better define the condition of the RPV, and to provide better stability in defining the best estimate of RT_{PTS} for EOL and EOLE, NMC has obtained and generated fracture toughness data for two different welds fabricated from the limiting Linde 80 flux weld wire heat 72442. These two welds (SA-1484 and WF-67) have been evaluated in the non-irradiated condition and were irradiated to essentially the same fluence of 1.25×10^{19} n/cm^2 (E > 1 MeV) in two different irradiations (six fuel cycles) at the Davis Besse (DB) reactor. The test samples available from each capsule were five 0.936T round compact tension (0.936T-RCT) specimens and eight to twelve precracked Charpy three-point bend (0.394T-3PB) specimens; the non-irradiated weld test specimens included 0.394T-3PB and various compact tension size specimens. The WF-67 weld was also irradiated to a higher fluence of 1.66×10^{19} n/cm^2 (E > 1 MeV) at the Crystal River 3 (CR3) reactor, but only four fracture toughness specimens (0.5T-CT) were initially available for testing. Additional testing of two 0.394T-CT and two 0.936T-RCT specimens from the CR3 capsule has been completed to produce a valid measurement of transition temperature, T_o, following the Master Curve methodology prescribed in ASTM Test Method E 1921-02

[3]. Section 3 of this report describes all measured fracture toughness results, corresponding to non-irradiated and irradiated (less than the projected RPV EOL fluence) conditions.

The Master Curve fracture toughness approach has precedent with the Nuclear Regulatory Commission (NRC) through the non-irradiated application for the Zion RPVs by the B&W Owners Group [4] and in the Safety Evaluation (SE) issuance for the Kewaunee RPV [5]. Additionally, the B&W Owners Group has submitted a report covering non-irradiated fracture toughness for all of the welds in B&W-fabricated RPVs [6], and First Energy Nuclear Operating Company has produced a WCAP report for application for the Beaver Valley Unit 1 RPV [7].

To meet the intent of current regulations that use the CVN-based approach, NMC recognizes that the currently completed fracture toughness testing allows only the projection of an RT_{PTS} value for EOL and EOLE fluences using the ASTM E 1921-02 transition temperature, T_o [3], and the ASME Code defined transition temperature, RT_{To}, based on T_o [8,9]. To achieve full compliance for EOL and EOLE fluences, this same approach will be applied by performing Master Curve testing to measure T_o at higher fluence values. Four (4) more surveillance capsules will become available in the future from Davis Besse (2), Crystal River 3, and PBNP-2. Two of the capsules from Davis Besse and Crystal River 3 contain specimens that will validate material properties approaching the EOL fluence, and the PBNP-2 specimens will verify material properties through the EOLE fluence value. The supplemental surveillance capsule that has been fabricated and installed in PBNP-2 contains the limiting PBNP-2 weld metal heat 72442 (WF-67), as well as a weld and plate for the PBNP-1 RPV and a weld for the Davis Besse RPV. The testing of the supplemental capsule as part of a revised surveillance program will allow direct measurement of fracture toughness at the fluence corresponding to EOLE, thus eliminating the need to extrapolate using lower fluence data.

As indicated earlier, Section 3 includes presentation of the individual baseline non-irradiated and irradiated Master Curve fracture toughness results for weld wire heat 72442. Three methodologies are used to estimate the adjusted reference temperature (ART) at EOL and EOLE utilizing RT_{To} and a suitable margin. These methodologies are: (1) the approach endorsed in B&W-2308 where the initial RT_{To} is established using a large amount of fracture toughness data and a Charpy shift is used to account for the effects of irradiation with a suitable margin added for uncertainties in the Charpy shift, determination of RT_{To}, and material variability; (2) the approach used by the NRC in approving the Master Curve application for the Kewaunee RPV; and (3) the direct measurement approach, which focuses on the irradiated fracture toughness measurements and explicitly considers the individual uncertainties to determine an appropriate margin. This latter determination is the most realistic value and the other two have added conservatisms built into the methods. All of the methods result in an EOLE ART value (equivalent to RT_{PTS}) of less than 300°F. The calculations and projections for ART (and RT_{PTS}) at EOL and EOLE are presented in Section 4.

Details of the supplemental surveillance program for PBNP-2 are summarized in Section 5. The future withdrawal schedule for the PBNP-2 supplemental capsule is presented and discussed with regard to future fracture toughness testing and ART/RT_{PTS} validation. In addition, applicable surveillance capsules being irradiated as part of the B&W Owners Group integrated surveillance program are described.

2 REVIEW OF CVN-BASED PTS STATUS FOR PBNP-2

2.1 REVIEW OF BELTLINE MATERIALS AND FLUENCES

The beltline region of an RPV, per ASTM E185-82 [10], is defined as "the irradiated region of the reactor vessel (shell material including weld regions and plates or forgings) that directly surrounds the effective height of the active core and adjacent regions that are predicted to experience sufficient neutron damage to warrant consideration in the selection of the surveillance material." Babcock and Wilcox Company (B&W) fabricated the PBNP-2 RPV using three shell forgings welded circumferentially at two locations. The final girth weld (nozzle to intermediate shell) was actually fabricated by Combustion Engineering (CE) using a Linde 1092 flux weld. Table 2-1 provides a summary of the PBNP-2 RPV beltline materials, heat numbers, initial RT_{NDT} values, and the nominal chemistry for the beltline materials.

The Nuclear Steam Supply System (NSSS) vendor, Westinghouse Electric Company, developed the original surveillance program for the PBNP-2 RPV. The original surveillance program was designed under ASTM E 185-66, but subsequent testing has followed the latest version of ASTM E 185 that has been approved by the NRC (ASTM E 185-82). A description of the surveillance program and the pre-irradiation mechanical properties of the reactor vessel materials are presented in WCAP-7712 [11]. Based on the measured chemistry, initial mechanical properties, and projected fluence, lower and intermediate shell forging heats 123V500 and 122W195 and a submerged arc weld metal (similar to the vessel intermediate to lower shell girth weld seam) were selected to be in the reactor vessel surveillance program. The actual weld metal corresponding to the limiting intermediate to lower shell girth weld seam, heat 72442 (flux lot designation SA-1484), was not included in the original surveillance program, however Wisconsin Electric Power Company (the company operating PBNP-2 at that time) was able to gain access to key data on this weld metal by joining the B&W Owners Group, which had been irradiating weld wire heat 72442 in a host reactor program. Four (4) capsules have been withdrawn and tested to date from the PBNP-2 surveillance program, which provide data on the two forging materials and the flux/fluence exposure. Additionally, data have been generated on Heat 72442 weld metals (SA-1484 and WF-67) through the B&W Owners Group, which provide the basis for RPV projections for the most limiting material at PBNP-2.

The best estimate fluence projections for the operating life for PBNP-2 were determined as shown in Table 2-2. The conditions for the projections are based on a power uprate of the reactor core from 1518.5 MWt to 1678.0 MWt that began October 1, 2001 and a future cumulative capacity factor of 95%. In addition, the hafnium flux reduction has been removed, and the physics calculation process for fluence does not take credit for use of the FERRET Code. The FERRET Code is used to combine the results of neutron measurements with neutron transport calculations to establish best estimates of the neutron exposure. However, the FERRET Code has not been reviewed and approved by the NRC, and currently cannot be used in a licensing submittal. EOL corresponds to

33.86 EFPY (rounded to 34 EFPY) and EOLE for 20 additional years of operation occurs at an additional 19.0 EFPY; therefore, EOLE is projected to be 53 EFPY.

2.2 ART PROJECTIONS FOR EOL AND EOLE

In 1985, the NRC issued a formal rule on PTS, 10 CFR 50.61. It established the screening criteria for pressurized water reactor (PWR) vessel embrittlement as measured by the reference temperature termed RT_{PTS}. Screening criteria were set corresponding to EOL plant operation for beltline axial welds, forgings, and plates at 270°F, and at 300°F for beltline circumferential weld seams. All PWR vessels in the United States have been required to evaluate vessel embrittlement in accordance with these criteria through EOL or beyond.

The NRC amended its regulations for PWR plants to change the procedure for calculating radiation embrittlement RT_{PTS} values. The revised PTS Rule was published in the Federal Register, May 15, 1991 with an effective date of June 14, 1991, and later updated on December 19, 1995 with an effective date of July 29, 1996. These amendments made the procedure for calculating RT_{PTS} values consistent with the method given in Regulatory Guide 1.99, Revision 2 [12]. The PTS Rule states:

- The screening criteria for the reactor vessel beltline region are:

  270°F for plates, forgings, and axial welds, and
  300°F for circumferential welds.

- The following equations must be used to calculate RT_{PTS} values (the value of ART at the fluence corresponding to current EOL) for each weld, plate or forging in the reactor vessel beltline:

$$RT_{PTS} = IRT + \Delta RT_{NDT} + M \qquad (1)$$

  where IRT is the initial RT_{NDT} and M is a required margin term equal to an assumed two standard deviation (2σ) for the combined uncertainty in IRT and ΔRT_{NDT};

$$\Delta RT_{NDT} = CF * [\phi t]^{(0.28 - 0.1 \log [\phi t])} \qquad (2)$$

  where CF is the chemistry factor and ϕt is the fluence at the inside surface (10^{19} n/cm^2; E > 1 MeV).

- All values of RT_{PTS} must be verified to be the most limiting for the specific reactor vessel. In doing this, each plant should consider plant-specific information that could affect the level of embrittlement. This includes determination of best estimate mean values of Cu and Ni for the vessel that considers all sources and welds made using the subject weld wire heat.

- Plant-specific PTS safety analyses are required before a plant is within three years of reaching the screening criteria, including analyses of alternatives to minimize the PTS concern.

- Prior NRC approval is required for operation beyond the screening criteria.

In complying with the provisions of the PTS Rule, RT_{PTS} calculations have been performed for PBNP-2. Table 2-3 identifies all of the Cu and Ni measurements for weld wire heat 72442. The following designations are used in the table: WQ is weld qualification; CR-3 ND is Crystal River Unit 3 nozzle dropout; MD-1 ND is Midland Unit 1 nozzle dropout, and MV is Mount Vernon, a B&W facility. Three different heat/flux combinations were used to fabricate welds using weld wire heat 72442. The overall source mean values are shown at the end of the table and the values round to 0.26 wt% Cu and 0.60 wt% Ni. The measured chemistries for the individual welds will be used later to make adjustments to the shift data from measured fracture toughness data. The results of the calculation of RT_{PTS} are shown in Tables 2-4 and 2-5 for EOL (34 EFPY) and EOLE (53 EFPY), respectively. The details of the calculations are explained in the notes and are based on the summary given in BAW-2325 [13]. The best estimate chemistry for the CE weld heat 21935 was obtained from CE NPSD-1039, Rev. 2 [14].

As shown in Table 2-5, the EOLE fluence yields an RT_{PTS} value of 316°F when using Charpy based methods for the limiting weld for a power uprate to 1678.0 MWt and removal of the hafnium flux reduction assemblies. Therefore, to obtain extra margin relative to EOL and to reach EOLE, the Master Curve approach is being implemented to properly define a fracture toughness-based transition temperature. The additional fracture toughness testing and evaluation using the Master Curve approach provides a technically superior method for assessing radiation damage to the limiting PBNP-2 weld. Application of the Master Curve approach also should be considered during current operating life for heat-up/cool-down curves and low temperature over-pressure protection (LTOP) to assure continuity of the Master Curve approach. Having a better knowledge of the fracture-toughness based transition temperature, economic and timing decisions regarding the need to replace or remove the hafnium inserts, reactor power uprating, and license renewal can be made in a more prudent manner.

Table 2-1
Summary of the PBNP-2 RPV Beltline Materials

RPV Component Description	Heat (Heat/Lot)	Initial RT_{NDT} (°F)	wt% Cu	wt% Ni
Nozzle Shell Forging	123V352	+40	0.11	0.73
Intermediate Shell Forging	123V500	+40	0.09	0.70
Lower Shell Forging	122W195	+40	0.05	0.72
Nozzle to Intermediate Shell Circumferential Weld	21935	-56	0.18	0.70
Intermediate To Lower Shell Circumferential Weld	72442 (SA-1484)	-5	0.26	0.60

Table 2-2
Projections for Fluence for the PBNP-2 RPV at EOL and EOLE

RPV Component Description	Heat (Heat/Lot)	EOL (34 EFPY) Fluence (x 10^{19} n/cm^2)	EOL (34 EFPY) Fluence Factor[(a)]	EOLE (53 EFPY) Fluence (x 10^{19} n/cm^2)	EOLE (53 EFPY) Fluence Factor[(a)]
Nozzle Shell Forging	123V352	0.335	0.699	0.550	0.833
Intermediate Shell Forging	123V500	3.38	1.319	5.385	1.417
Lower Shell Forging	122W195	3.30	1.313	5.315	1.414
Nozzle to Intermediate Shell Circ. Weld	21935	0.335	0.699	0.550	0.833
Intermediate to Lower Shell Circ. Weld	72442 (SA-1484)	3.13	1.301	5.085	1.406

[(a)] Fluence factor = $[\phi t]^{(0.28-0.1 \log[\phi t])}$; where ϕt is fluence

Table 2-3
Summary of Weld Wire 72442 Cu/Ni Measurements

Weld ID	Flux Lot	Weld Metal Source	Analysis Source	Cu (wt%)	Ni (wt%)
SA-1450	8467	WQ	Barberton	0.25	0.60
Source Mean				**0.25**	**0.60**
SA-1484	8579	WQ	Barberton	0.25	0.64
Source Mean				**0.25**	**0.64**
SA-1484	8579	CR-3 ND	MV 29799	0.24	0.57
			MV 29800	0.23	0.60
			MV 29801	0.24	0.59
			MV 29802	0.24	0.60
			MV 29803	0.27	0.60
			MV 29804	0.22	0.60
			MV 29805	0.26	0.60
			MV 29806	0.27	0.59
			MV 29807	0.23	0.60
			MV 29808	0.28	0.59
			MV 29809	0.29	0.59
			MV 29810	0.29	0.59
			MV 29811	0.30	0.60
			MV 29812	0.31	0.60
			MV 29813	0.30	0.59
			MV 29814	0.26	0.59
			MV 29815	0.24	0.60
			MV 29816	0.24	0.60
Source Mean				**0.262**	**0.594**
WF-67	8669	WQ	MV 6556	0.27	0.57
			Retest	0.33	---
			Retest	0.35	0.58
			Retest	0.33	0.58
Source Mean				**0.320**	**0.577**
WF-67	8669	MD-1 ND	MV 30431	0.17	0.61
			MV 30431	0.15	0.61
			MV 30429	0.15	0.60
			MV 30428	0.15	0.61
			MV 30427	0.18	0.61
			MV 30426	0.20	0.60
			MV 30425	0.25	0.60
			MV 30424	0.25	0.60
			MV 30423	0.23	0.62
			MV 30422	0.21	0.60
			MV 30421	0.26	0.60
			MV 30420	0.33	0.60

			MV 30419	0.35	0.59
			MV 28880	0.16	0.60
			MV 28879	0.13	0.60
			MV 28878	0.15	0.60
			MV 28877	0.19	0.60
			MV 28876	0.21	0.60
			MV 28875	0.24	0.59
			MV 28874	0.22	0.60
			MV 28873	0.21	0.59
			MV 28872	0.32	0.58
			MV 28871	0.34	0.58
			MV 28800	0.24	0.59
			MV 28800	0.25	0.60
			MV 28802	0.21	0.60
			MV 28802	0.23	0.60
Source Mean				**0.221**	**0.599**
Overall Weighted Mean of the Sources				***0.261***	***0.602***
Standard Deviation of the Mean of the Sources				***0.036***	***0.023***

Table 2-4
ART/RT_{PTS} Projections at EOL (34 EFPY) Based on CVN Methodology for the PBNP-2 RPV

RPV Component Description	Heat (Heat/Lot)	Material and Margin Properties				Inside Surface ART/ RT_{PTS} Determination		
		Initial RT_{NDT} (°F)	CF (°F)	Margin (°F)	See Notes	Fluence Factor	ΔRT_{NDT} (°F)	RT_{PTS} (°F)
Nozzle Shell Forging	123V352	+40	76	34	A	0.699	53.12	127
Intermediate Shell Forging	123V500	+40	58	34	B	1.319	76.48	150
Lower Shell Forging	122W195	+40	42.8	17	C	1.313	56.20	113
Nozzle to Intermediate Shell Circ. Weld	21935	-56	170	65.51	D	0.699	118.82	128
Intermediate To Lower Shell Circ. Weld	72442 (SA-1484)	-5	180	68.47	E	1.301	234.14	298

Notes:

A Measured value of IRT (Initial RT_{NDT}) with $\sigma_I = 0$ and table value for CF with $\sigma_\Delta = 17°F$; Margin = $2 (\sigma_I^2 + \sigma_\Delta^2)^{1/2} = 2 [(0)^2 + (17)^2]^{1/2} = 34°F$.

B Measured value of IRT (Initial RT_{NDT}) with $\sigma_I = 0$ and table value for CF since PBNP-2 surveillance data are non-credible and table value of CF is conservative with $\sigma_\Delta = 17°F$; Margin = $2 (\sigma_I^2 + \sigma_\Delta^2)^{1/2} = 2 [(0)^2 + (17)^2]^{1/2} = 34°F$.

C Measured value of IRT (Initial RT_{NDT}) with $\sigma_I = 0$ and calculated value for CF from credible surveillance data with $\sigma_\Delta = 8.5°F$; Margin = $2 (\sigma_I^2 + \sigma_\Delta^2)^{1/2} = 2 [(0)^2 + (8.5)^2]^{1/2} = 17°F$.

D Generic value of IRT (Initial RT_{NDT}) for a Linde 1092 weld with $\sigma_I = 17°F$ and table value for CF with $\sigma_\Delta = 28°F$; Margin = $2 (\sigma_I^2 + \sigma_\Delta^2)^{1/2} = 2 [(17)^2 + (28)^2]^{1/2} = 65.51°F$.

E Generic value of IRT (Initial RT_{NDT}) for a Linde 80 weld with $\sigma_I = 19.7°F$ and table value for CF since B&WOG surveillance data are non-credible and table value of CF is conservative with $\sigma_\Delta = 28°F$; Margin = $2 (\sigma_I^2 + \sigma_\Delta^2)^{1/2} = 2 [(19.7)^2 + (28)^2]^{1/2} = 68.47°F$.

Table 2-5
ART/RT_{PTS} Projections at EOLE (53 EFPY) Based on CVN Methodology for the PBNP-2 RPV

RPV Component Description	Heat (Heat/Lot)	Material and Margin Properties				Inside Surface ART/ RT_{PTS} Determination		
		Initial RT_{NDT} (°F)	CF (°F)	Margin (°F)	See Notes	Fluence Factor	ΔRT_{NDT} (°F)	RT_{PTS} (°F)
Nozzle Shell Forging	123V352	+40	76	34	A	0.833	63.30	137
Intermediate Shell Forging	123V500	+40	58	34	B	1.417	82.17	156
Lower Shell Forging	122W195	+40	42.8	17	C	1.414	60.53	118
Nozzle to Intermediate Shell Circ. Weld	21935	-56	170	65.51	D	0.833	141.58	151
Intermediate To Lower Shell Circ. Weld	72442 (SA-1484)	-5	180	68.47	E	1.406	253.02	316

Notes:

A Measured value of IRT (Initial RT_{NDT}) with $\sigma_I = 0$ and table value for CF with $\sigma_\Delta = 17°F$; Margin = $2 (\sigma_I^2 + \sigma_\Delta^2)^{1/2} = 2 [(0)^2 + (17)^2]^{1/2} = 34°F$.

B Measured value of IRT (Initial RT_{NDT}) with $\sigma_I = 0$ and table value for CF since PBNP-2 surveillance data are non-credible and table value of CF is conservative with $\sigma_\Delta = 17°F$; Margin = $2 (\sigma_I^2 + \sigma_\Delta^2)^{1/2} = 2 [(0)^2 + (17)^2]^{1/2} = 34°F$.

C Measured value of IRT (Initial RT_{NDT}) with $\sigma_I = 0$ and calculated value for CF from credible surveillance data with $\sigma_\Delta = 8.5°F$; Margin = $2 (\sigma_I^2 + \sigma_\Delta^2)^{1/2} = 2 [(0)^2 + (8.5)^2]^{1/2} = 17°F$.

D Generic value of IRT (Initial RT_{NDT}) for a Linde 1092 weld with $\sigma_I = 17°F$ and table value for CF with $\sigma_\Delta = 28°F$; Margin = $2 (\sigma_I^2 + \sigma_\Delta^2)^{1/2} = 2 [(17)^2 + (28)^2]^{1/2} = 65.51°F$.

E Generic value of IRT (Initial RT_{NDT}) for a Linde 80 weld with $\sigma_I = 19.7°F$ and table value for CF since B&WOG surveillance data are non-credible and table value of CF is conservative with $\sigma_\Delta = 28°F$; Margin = $2 (\sigma_I^2 + \sigma_\Delta^2)^{1/2} = 2 [(19.7)^2 + (28)^2]^{1/2} = 68.47°F$.

3 FRACTURE TOUGHNESS TESTING AND RESULTS

This section presents the measured Master Curve fracture toughness data for the PBNP-2 weld metal 72442. The testing that was performed followed the testing requirements of ASTM E 1921-02 [3]. All of the fracture toughness testing was performed by BWXT Services, Inc. (formerly McDermott Technologies and B&W) as part of the B&W Owners Group activities and under contract from NMC. BWXT Services, Inc., has been involved in Master Curve testing since the middle 1990s and has a proven record for producing consistent and reliable data [6,7].

Table 3-1 shows the fracture toughness testing performed to date on weld wire heat 72442. The testing program has included the following test specimen types: standard ½T compact tension (0.5T-CT); standard 0.394T-CT, precracked Charpy three point bend (0.394T-3PB); and 0.936T round compact tension (0.936T-RCT). The individual results from the specimen types and irradiation conditions are listed in Tables 3-2 through 3-7. Note that the determination of K_J values were calculated using the plane stress method in the earlier 1997 version of ASTM E 1921 since that method was being used when the fracture toughness testing was performed. The new 2002 version of ASTM E 1921 changes the calculation method to a plane strain approach, which reduces the values of T_o by a few degrees Fahrenheit. Since the values determined using the plane stress method are higher and thus more conservative, these are the values reported and used here. The values reported in Tables 3-2 through 3-7 were obtained from B&W Owners Group reports BAW-2254 [15], BAW-2308 [6], BAW-2313, Rev. 2 [16], BAW-2400 [17], and BAW-2412 [18]. Further testing and calculation details are contained in those reports.

Except as noted above, the determination of T_o from the fracture toughness data follows the multi-temperature method presented in ASTM E 1921-02. Table 3-8 lists the T_o values determined for the six available data sets (three unirradiated and three irradiated). The average of the fluences from the individual specimens within a capsule has been used, and the different type and specimen size data have been combined as indicated. All of the non-irradiated 0.394T-3PB specimen data have been corrected to include a bias adjustment of 18°F to adjust all of the data to a similar constraint level (consistent with CT specimens, which were the primary basis for the ASME Code K_{IC} curve). The irradiated 0.394T-3PB specimen data were adjusted by 8°F, consistent with the NRC approach of using 8.5°F approved for the Kewaunee vessel [5].

The need for a bias adjustment appears to be dependent upon the degree of loss of constraint from testing small three-point bend specimens versus CT (pure bend) specimens. The CT specimen geometry maintains a higher level of constraint than the 3PB specimen geometry. This difference seems to be due to the difference in pure bending for the CT-type specimen versus the combined bending plus a small amount of shear loading for 3PB testing. The effect of specimen size appears to be reconciled through the Master Curve normalization to 1T size, but the loss of constraint from the specimen loading geometry is not. Recent finite element studies have compared the three-point bend versus the CT loading for non-irradiated ferritic material flow properties and found that a difference of 18°F can be expected in measured values of T_o [19]. Note

that the bias is expected to decrease with the increased yield strength and different strain hardening exponent indicative of irradiated materials, but the detailed calculations have not been performed for the irradiated case. The strain hardening exponent n = 0.1 (N = 10) for unirradiated RPV materials typically changes to n = 0.07 (N=14.3) for irradiated materials. There are very limited experimental data for making a comparison in the irradiated case, since there is rarely enough irradiated material to assess this constraint difference using different specimen types. Evaluations of T_0 using two of the irradiated data sets developed here are presented in Table 3-9; these comparisons suggest that the 8°F bias adjustment is very conservative. Note that the 0.936T-RCT data sets do not meet the ASTM E 1921-02 validity requirements for number of specimens. These two invalid data sets suggest a reversed bias effect for the irradiated data sets.

A large amount of non-irradiated experimental data supports the need for a bias adjustment of about 18°F for unirradiated T_0 results [7]. The two unirradiated determinations of T_0 using 0.394T-3PB specimens support the need for a bias correction to match the determination from the CT specimens (see Table 3-8). The last row in Table 3-9 reflects the combination of all unirradiated specimen tests with the 18°F bias included. The combined result is a T_0 of -73°F.

The B&W Owners Group has recently submitted a topical report on redefining the initial reference temperature using the Master Curve approach [6]. The approach taken by the B&W Owners Group relative to this specific heat of weld material is similar to what is presented here (including the 18°F bias for 3PB specimens), except they propose an additional adjustment based on a loading rate effect. ASTM E 1921-02 allows a range of quasi-static loading rates with no adjustment identified. With the loading rate adjustment included, the B&W Owners Group determined a non-irradiated T_0 value of -65°F [6], which is conservatively 8°F higher than the –73°F value indicated in Table 3-8 (where no loading rate adjustment is used).

Table 3-1
Fracture Toughness Testing for Weld Heat 72442

Weld Code (Flux Lot)	Capsule and Fluence (10^{19} n/cm^2, E > 1 MeV)	Test Specimen Type	Number of Test Specimens
SA-1484 (8579)	Unirradiated; 51 h stress relief	0.394T-3PB	9 (see Table 3-2)
	Capsule A3: 1.246[a]	0.394T-3PB	12 (see Table 3-3)
	Capsule A3: 1.261[a]	0.936T-RCT	5 (see Table 3-3)
WF-67 (8669)	Unirradiated; 50 h stress relief	0.394T-CT 0.5T-CT 0.936T-RCT	4 (see Table 3-4) 1 (see Table 3-4) 2 (see Table 3-4)
	Unirradiated; 11 h stress relief	0.394T-3PB	8 (see Table 3-5)
	Capsule L1: 1.169[a]	0.394T-3PB	8 (see Table 3-6)
	Capsule L1: 1.392[a]	0.936T-RCT	5 (see Table 3-6)
	Capsule LG2: 1.59[b]	0.5T-CT	4 (see Table 3-7)
	Capsule LG2: 1.28 & 1.93[b]	0.394T-CT	2 (see Table 3-7)
	Capsule LG2: 1.86[b]	0.936T-RCT	2 (see Table 3-7)

(a) Irradiated at Davis Besse (DB).
(b) Irradiated at Crystal River 3 (CR3)

Table 3-2
Test Results for Unirradiated Weld Metal SA-1484
(0.394T-3PB Specimens, No Sidegrooves) [6,18]

Specimen Identification	Test Temperature (°F)	J_c (in-lb/in^2)	K_J (ksi√in)
RS101	-100	177.0	72.9
RS102	-100	55.8	40.9
RS103	-100	511.0	123.8
RS104	-100	382.0	107.0
RS105	-100	456.0	116.9
RS106	-100	129.0	62.2
RS107	-100	581.0	132.0*
RS108	-100	393.0	108.6
RS100	-75	717.0	146.3*

* Censored in determining T_o

Table 3-3
Test Results for Irradiated Weld Metal SA-1484, Capsule DB-A3 [6,18]

Specimen Identification	Test Temperature (°F)	J_c (in-lb/in^2)	K_J (ksi√in)
0.394T-3PB (No sidegrooves); 1.246 x 10^{19} n/cm^2			
RS120	10	88.3	51.0*
RS116	10	209.0	78.4*
RS115	10	230.0	82.3*
RS112	40	76.8	47.4
RS121	40	149.0	66.0
RS114	40	197.0	75.9
RS123	80	66.0	43.8
RS118	80	68.9	44.8
RS117	80	289.0	91.7
RS113	100	191.0	74.4
RS122	100	220.0	79.8
RS119	100	671.0	139.4**
0.936T-RTCT (10% sidegrooves); 1.261 x 10^{19} n/cm^2			
RS205	120	297.0	92.6
RS206	120	350.0	100.5
RS208	120	432.0	111.7
RS209	120	528.0	123.5
RS207	120	572.0	128.5

* Slightly outside the $T_o \pm 90°F$ range of multi-temperature data, but included in determining T_o

** Censored in determining T_o

Table 3-4
Test Results for Unirradiated Weld Metal WF-67 [6,16]
(50 Hour Stress Relief)

Specimen Identification	Test Temperature (°F)	J_c (in-lb/in^2)	K_J (ksi√in)
0.394T-CT (No sidegrooves)			
PT064	-75	93.0	52.7
PT060	-75	220	81.0
PT065	-75	408	110.4
PT061	-75	711	145.7
0.5T-CT (No sidegrooves)			
PT029	-65	415	111.2
0.936T-RTCT (No sidegrooves)			
PT140	-50	145	65.7
RS117	-50	133	62.9

Table 3-5
Test Results for Unirradiated Weld Metal WF-67 [6]
(11 Hour Stress Relief)
(0.394T-3PB Specimens, No Sidegrooves)

Specimen Identification	Test Temperature (°F)	J_c (in-lb/in^2)	K_J (ksi√in)
NA	-120	NA	45.2
NA	-120	NA	57.8
NA	-120	NA	66.5
NA	-120	NA	84.1
NA	-120	NA	98.1
NA	-120	NA	106.4
NA	-120	NA	109.7
NA	-120	NA	130.8*

* Censored in determining T_o

Table 3-6
Test Results for Irradiated Weld Metal WF-67, Capsule DB-L1 [6,17]

Specimen Identification	Test Temperature (°F)	J_c (in-lb/in^2)	K_J (ksi√in)
0.394T-3PB (No sidegrooves); 1.169 x 10^{19} n/cm^2			
DE132	-30	70.2	45.6
DE143	5	503	121.7
DE141	0	64.7	43.7
DE140	0	73.6	46.6
DE135	0	121	59.7
DE142	0	193	75.4
DE134	0	197	76.2
DE127	0	270	89.2
0.936T-RTCT (10% sidegrooves); 1.392 x 10^{19} n/cm^2			
DE216	30	66.0	44.0
DE213	30	315	96.1
DE214	30	328	98.1
DE212	30	388	106.7
DE210	30	456	115.6

Table 3-7
Test Results for Irradiated Weld Metal WF-67, Capsule CR3-LG2 [6,15]

Specimen Identification	Test Temperature (°F)	J_c (in-lb/in^2)	K_J (ksi√in)
0.394T-CT (No sidegrooves); 1.28 x 10^{19} n/cm^2			
NA	35	NA	70.2
0.394T-CT (No sidegrooves); 1.93 x 10^{19} n/cm^2			
NA	35	NA	116.0
0.5T-CT (No sidegrooves); 1.59 x 10^{19} n/cm^2			
PT020	0	81.1	48.9
PT021	0	86.8	50.6
PT023	0	178.3	72.5
PT022	0	254.6	86.6
0.936T-RTCT (10% sidegrooves); 1.86 x 10^{19} n/cm^2			
NA	90	NA	139.8
NA	90	NA	102.1

Table 3-8
T_o Determinations from Measured Fracture Toughness Data for Weld 72442

Weld Code (Flux Lot)	Average Fluence (10^{19} n/cm^2, E > 1 MeV)	Test Specimen Types	T_o (°F)
SA-1484 (8579)	Unirradiated (51 hour stress relief)	0.394T-3PB	-74[a]
	1.25	0.394T-3PB and 0.936T-RCT	109[b]
WF-67 (8669)	Unirradiated (50 hour stress relief)	0.394T-CT, 0.5T-CT, and 0.936T-RCT	-60
	Unirradiated (11 hour stress relief)	0.394T-3PB	-82[a]
	1.255	0.394T-3PB and 0.936T-RCT	42[b]
	1.66	0.394T-CT, 0.5T-CT, and 0.936T-RCT	61
SA-1484 (8579) and WF-67 (8669)	All Unirradiated Combined	See above	-73

(a) Includes three-point bend specimen bias of 18°F.
(b) Includes three-point bend specimen bias of 8°F.

Table 3-9
Comparison of T_o Values from Different Specimen Types with No Bias Correction for Weld 72442

Weld Code	Capsule and Fluence (10^{19} n/cm^2, E > 1 MeV)	Test Specimen Type	T_o, °F
SA-1484	Capsule A3: 1.246	0.394T-3PB	105
	Capsule A3: 1.261	0.936T-RCT	102*
WF-67	Capsule L1: 1.169	0.394T-3PB	48
	Capsule L1: 1.392	0.936T-RCT	28*

* Only five test specimens were tested, six specimens are needed to meet ASTM E 1921-02 requirements

4 APPLICATION OF FRACTURE TOUGHNESS RESULTS TO PBNP-2

4.1 MASTER CURVE APPLICATION METHODOLOGIES

The methodology used to examine the integrity of the PBNP-2 RPV is based on application of either ASME Code Case N-629 [8] or N-631 [9]. Current regulations are based on the ASME reference fracture toughness curves (K_{IC} and K_{IR}), which are indexed by the reference temperature RT_{NDT}. Because direct determinations of RT_{NDT} at all projected fluences are not feasible for irradiated materials at this time, current regulations employ estimates based on a combination of unirradiated RT_{NDT} values and irradiation-induced shifts in Charpy 30 ft-lb transition temperatures. ASME Code Case N-631 allows an alternative definition of the initial reference temperature (RT_{To}) to be used as RT_{NDT}. The regulatory parameters, RT_{PTS} and ART are determined by adding an additional margin to these estimated RT_{NDT} values to assure that the resulting indexed fracture toughness curve provides a lower bound to the fracture toughness data. ASME Code Case N-629 provides an alternative method for indexing the ASME reference fracture toughness curves, based directly on fracture toughness measurements of irradiated surveillance capsule materials. As in the traditional regulatory approach, appropriate margin is needed to establish the regulatory parameters, RT_{PTS} and ART at the EOL fluence using measured values of RT_{To}. Two EPRI reports have reviewed the Master Curve technical issues associated with the application of the Master Curve methodology and provided technical justification for the two ASME Code Cases, including an assessment of uncertainties and margin consideration [20, 21].

Three approaches are presented here for assessing the fracture toughness-based values of ART and RT_{PTS} at EOL and EOLE for the limiting weld metal heat 72442. The three methods are presented in the order that produces the highest degree of extra inherent margin. The first two methods rely upon the shift-based approach of adding either a Charpy shift or Master Curve T_o (and RT_{To}) shift to an initial measure of reference toughness (RT_{To}). The first approach uses the measured value of initial RT_{To} and adds a Charpy shift. The second approach also uses the measured value of initial RT_{To}, but adds a fracture toughness-based shift in RT_{To}. This method is the one that was used by the NRC in approving the Kewaunee Master Curve application. The third approach, which produces the most accurate determination, uses only the irradiated RT_{To} values directly as measurement of the irradiated reference temperature.

Application of direct measurements of fracture toughness to RPV analysis requires a method for transforming the measured values to equivalent values at the fluence of interest, if measurements are not directly made at that fluence. Current regulations employ trend equations for the Charpy transition temperature shifts, which are provided in 10 CFR 50.61 [1] and NRC Regulatory Guide 1.99, Revision 2 [12] to accomplish this transformation. Recently, ASTM E 900-02 [22] was passed using a new trend equation that is mechanistically-guided, as described in an EPRI report [23]. However, there is no equivalent trend curve for Master Curve measurements. In the submittal for the Kewaunee RPV [24], the available data spanned the fluence of interest at EOL and

EOLE, and the transformation required only a small interpolation. However, application for the Beaver Valley Unit 1 RPV required an extrapolation to the EOLE fluence [7]. Application for the PBNP-2 circumferential weld is similar to the Beaver Valley Unit 1 case in that the current available data do not reach the current EOL or EOLE fluence levels. Thus, the EOL and EOLE fracture toughness trend must be inferred by extrapolating RT_{To} data from the three available irradiation conditions. This extrapolation will be confirmed by future fracture toughness surveillance testing of the new capsule inserted in PBNP-2 and irradiated to the EOLE RPV fluence. Future testing of additional B&W Owners Group integrated program capsules at intermediate fluences is also scheduled.

As mentioned previously, application of the Master Curve technology requires the development of a margin strategy. Although the ASME Code Cases provide a reference temperature (RT_{To}), which can be used as an alternative to RT_{NDT}, they do not provide guidance on the margin required to determine corresponding values of RT_{PTS} or ART. The ASME Code reference temperature, RT_{NDT}, is designed to describe the ductile-to-brittle transition of ferritic steels. By itself, RT_{NDT} defines a degree of unspecified inherent conservatism in the ductile-to-brittle transition temperature since it is based on bounding values of nil-ductility transition temperature and 50 ft-lb / 35 mils (lateral expansion) CVN temperature. In terms of actual fracture toughness, RT_{NDT} is merely an indicator of underlying material properties. However, the relationship defined in the ASME Code between RT_{NDT} and the reference toughness curves does imply real inherent conservatism. By choosing to index the reference toughness curves in a manner such that they provide lower bounds to the existing fracture toughness data, the ASME Code has sought to provide a conservative method for estimating fracture toughness values to be used in RPV integrity analysis. When used for unirradiated properties, where RT_{NDT} is measured following the ASME Code procedure, no additional margin is generally required in the analytical process.

Although the definition of RT_{NDT} is not limited in application to unirradiated materials, the amount of material required makes direct determinations of RT_{NDT} in irradiated materials impractical. Therefore, current regulations employ ART to index the reference toughness curves.* The ART value is defined for a specific neutron fluence, which is generally taken as the EOL or EOLE fluence. However, the general form of the definition may be described as:

$$ART = RT(\phi t) + Margin \qquad (3)$$

where $RT(\phi t)$ is the estimated RT_{NDT} value as a function of fluence, and Margin is to account for the uncertainties in the estimation process.

The methodology being applied for the PBNP-2 RPV is dependent on the Master Curve application method being used. Each of the methods and the determination of Margin are

* Although the definitions for ART and RT_{PTS} appear in different places (one in an NRC Regulatory Guide [12] and the other in an NRC Regulation [1]), they are identical in computation. For simplicity, ART generally is employed in the following equations and discussion to describe both values.

described in the following sections. Table 4-1 summarizes the results from all of the methods.

4.2 MEASURED INITIAL RT_{To} AND CHARPY-SHIFT APPROACH

In current regulation, the reference temperature is estimated as:

$$RT(\phi t) = RT_{NDT(U)} + \Delta RT(\phi t) \quad (4)$$

where $RT_{NDT(U)}$ is the initial (unirradiated) RT_{NDT} value, and
$\Delta RT(\phi t)$ is the Charpy 30 ft-lb transition temperature shift from Regulatory Guide 1.99, Revision 2 [12] or ASTM E 900-02 [22].

Under current regulations, generic values of $RT_{NDT(U)}$ may be used, but the associated uncertainties must be included in the Margin term. An alternative formulation of Equation 4 is required for Master Curve applications.

ASME Code Case N-631 provides a means of measuring an alternative reference temperature, RT_{To}, for non-irradiated materials, while ASME Code Case N-629 provides a means of directly measuring an alternative reference temperature, RT_{To}, for irradiated materials (and non-irradiated materials also). This reference temperature is defined as:

$$RT_{To} = T_o + 35^{\circ}F \quad (5)$$

where T_o is defined using the ASTM E 1921 [3] test procedure.

The ASME Code Cases are constructed to allow RT_{To} to be used in place of RT_{NDT} as an indexing temperature for the ASME reference toughness curves. These Code Cases clearly anticipate that this alternative reference temperature acts in a manner similar to that defined in Equation 3 for determining ART.

In the application using the alternative definition for $RT_{NDT(U)}$ using Master Curve data and ASME Code Case N-631, Equation 4 becomes:

$$RT(\phi t) = RT_{To(U)} + \Delta RT(\phi t) \quad (6)$$

where $RT_{To(U)}$ is the initial (unirradiated) RT_{To} value (Equation 5), and
$\Delta RT(\phi t)$ is the Charpy 30 ft-lb transition temperature shift (Equation 2).

Substituting Equation 6 into Equation 3 gives:

$$ART = RT_{To(U)} + \Delta RT(\phi t) + Margin \quad (7)$$

Table 4-1 shows the calculation for Equation 7 as compared to the current Regulatory approach shown previously in Tables 2-4 and 2-5 using $RT_{NDT(U)}$ and Charpy shift

(ΔCVN). The $RT_{To(U)}$ selected is based on the combined T_o value of -73°F (T_o + 35°F = -38°F) listed at the end of Table 3-8. The Margin term was determined based on the BAW-2308 analysis of uncertainties in the determination of $RT_{To(U)}$ for weld heat 72442 [6] combined with the current Regulatory uncertainty in Charpy shift (σ_Δ). The uncertainty for initial (unirradiated) RT_{To} (σ_I) was determined for weld wire 72442 as the combination of uncertainties associated with material variability based on a Monte Carlo analysis of the actual data (σ_{MC}) and the uncertainty in the measurement of T_o (σ_{To}) from ASTM E 1921-02 [3]:

$$\sigma_I = [\sigma_{MC}^2 + \sigma_{To}^2]^{1/2} \quad (8)$$

For this application, the BAW-2308 Monte Carlo evaluation produced a σ_{MC} of 9.3°F for the 72442 weld metal and there were a total of 24 valid tests resulting in a σ_{To} of 7.4°F; therefore, $\sigma_I = [(9.3)^2 + (7.4)^2]^{1/2} = 11.9$°F. Margin is then determined following the Regulatory Guide 1.99, Rev. 2 [12] method at an approximate 95% (or 2σ) statistical level with the uncertainty in shift included :

$$\text{Margin} = 2\,[\sigma_I^2 + \sigma_\Delta^2]^{1/2} \quad (9)$$

Using the Regulatory Guide 1.99, Rev. 2 value for σ_Δ [12], Margin = 2 $[(11.9)^2 + (28)^2]^{1/2}$ = 60.8°F. This value is 7.7°F lower than that used in the current licensing approach using a generic value of $RT_{NDT(U)}$, which is logical since heat-specific RT_{To} data are being used instead of a generic value of RT_{NDT}.

As indicated in Table 4-1, the values of ART (and RT_{PTS}) determined using the B&W Owners Group approach are 40°F lower than from the current licensing approach, with the EOLE value now well below the PTS screening limit of 300°F.

4.3 MEASURED INITIAL RT_{To} AND RT_{To}-SHIFT APPROACH

Measurements of irradiated specimens in accordance with Code Case N-629 represent direct determinations of the function RT(ϕt) at specific fluences. Because they are direct measurements, they provide far more accurate values than the indirect estimation procedure used in current regulation or using the approach just discussed. However, most reactor vessel integrity analyses require the evaluation of RT(ϕt) at EOL and EOLE fluences, which can best be accomplished by fitting a curve to the measured data with some form of a fluence function.

The Regulatory Guide 1.99, Revision 2 [12] prediction curve fits CVN 30 ft-lb transition temperature (ΔCVN) data to a function of the form in Equation 2, which is restated here as:

$$\Delta\text{CVN} = \text{CF} * \text{FF}(\phi t) \quad (10)$$

where,

ΔCVN is the Charpy 30 ft-lb temperature shift assumed equal to ΔRT_{NDT},
CF is the chemistry factor, and
$FF(\phi t)$ = fluence function.

While the magnitude of the shift is determined by CF, the shape of the curve is determined by $FF(\phi t)$. $FF(\phi t)$ is the same for all materials; hence any material specific information is contained in the chemistry factor. Although Regulatory Guide 1.99, Revision 2 provides tables that allow determination of CF on the basis of the material form and composition, when credible surveillance data are available, CF can be determined by a fit to the data.

The use of CVN shifts to adjust the reference temperature is implicitly based on the assumption that there is equivalence between the fracture toughness shift and the CVN shift. This equivalence has been shown to be true when comparing ΔCVN and ΔT_o (or ΔRT_{To}) [6,25]. It is, therefore, reasonable to apply the same form of Equation 10 to assess the shift in fracture toughness transition temperature, ΔRT_{To}:

$$\Delta RT_{To} = CF_{To} * FF(\phi t) \tag{11}$$

where CF_{To} is the effective chemistry factor for fracture toughness shift.

When the Regulatory Guide 1.99, Revision 2 fluence function is used, CF_{To} may be determined by fitting ΔRT_{To} measurements. In this case, the reference temperature may be estimated as:

$$RT(\phi t) = RT_{To(U)} + \Delta RT_{To} = RT_{To(U)} + CF_{To} * FF(\phi t)\,. \tag{12}$$

Substitution of this relationship into Equation 7, defines the Master Curve ART value:

$$ART = RT_{To(U)} + CF_{To} * FF(\phi t) + Margin\,. \tag{13}$$

This equation may then be evaluated at the EOL and EOLE fluences to provide the final ART values. Evaluation of this equation requires determination of three basic parameters, $RT_{To(U)}$, CF_{To}, and Margin.

There are three other important aspects to be considered before Equation 13 is used. First, any specimen bias correction to the measured T_o data should be made. These constraint corrections already have been included in the results in Table 3-8, and these corrections are technically more realistic than those assumed by the NRC for the Kewaunee SE [5]. Additionally, the Kewaunee SE only considers use of 0.394T-3PB tests with an appropriate bias. In the data used here, more emphasis has been placed on CT specimens where no bias is needed. Use of *all* measured data is the preferred approach. Second, adjustments to reflect the differences in irradiation conditions between the surveillance specimen and the actual RPV must be made. For application to the PBNP-2 RPV, there are differences in the temperature of irradiation that need to be

considered. The average cold leg temperature for the PBNP-2 RPV is conservatively estimated to be 530°F at EOL and EOLE, while the cold leg temperature for the B&W Owners Group host reactors (DB and CR3) is higher at 556°F. This 26°F difference needs to be considered when evaluating the fracture toughness data irradiated in DB and CR3 as applied to the PBNP-2 vessel. Third, any chemistry differences in the best estimate for the PBNP-2 RPV weld and the two surveillance welds must be included.

The NRC developed a mathematical form of Equation 13 for the Kewaunee SE that included the three adjustments described above [5]. The only real difference between the NRC method and the CF_{To}-method in Equation 13 is use of an average value of non-irradiated RT_{To} versus a specific value for each weldment; the NRC approach allows use of individual weld initial RT_{To} values, whereas the approach in Equation 13 uses an average value. In the end, the NRC method averages the individual projections of ART, which is essentially the equivalent of averaging the initial values as used in Equation 13.

The method to adjust for irradiation temperature differences endorsed by the NRC uses a degree of shift adjustment per degree of temperature difference. When applied, the ratio of the adjusted shift value (measured plus 26°F) divided by the measured value is what is termed the temperature adjustment. This adjustment is shown in Table 4-2 for the measured shifts using the individual weld measurement of initial RT_{To} (the two measures for weld WF-67 were averaged). A similar adjustment based on the new ASTM E 900-02 correlation [22] is shown in Table 4-3. The NRC adjustment is much more conservative than that from ASTM E 900-02. The NRC adjustment is a function of the measured shifts, which is not consistent with the adjustment developed using the E 900-02 correlation.

Also shown in Tables 4-2 and 4-3 is the adjustment to account for differences in the best estimate chemistries for the PBNP-2 RPV weld and the two surveillance welds. The NRC approach uses the ratio of CF values from Regulatory Guide 1.99, Rev. 2 (i.e., CF for the PBNP-2 RPV divided by the CF for the surveillance weld). The ASTM E 900-02 approach uses the ratio of the predicted shifts for the differing chemistries between the RPV and the surveillance welds. The two methods give similar results with the ASTM E 900-02 method giving slightly higher adjustments. The ASTM E 900-02 approach is superior since it was developed using combined mechanistic and statistical criteria and utilized a larger and more current database as compared to the Regulatory Guide 1.99, Rev. 2 CF values.

Overall, however, the adjusted ΔRT_{To} values are lower using the new ASTM E 900-02 approach. Thus, the NRC adjustment method has added more conservatism into their methodology.

The measured ΔRT_{To} values developed using the fixed value of initial RT_{To} of -38°F are summarized in Table 4-4. These values differ by only a few degrees from those listed in Table 4-2 and 4-3. Adjustments to reflect the NRC predicted differences are also shown, and the CF_{To} value is calculated in an analogous manner to the CVN-based approach in 10 CFR 50.61 and Regulatory Guide 1.99, Rev. 2. The calculated CF_{To} is 163.3°F as

indicated in Table 4-1, which is less than the Charpy-based CF value of 180°F from the weld table in Regulatory Guide 1.99, Rev.2 and 10 CFR 50.61. This lower value of CF_{To} illustrates even more conservatism for the 72442 weld wire heat since the fracture toughness shift is less than the Charpy shift.

The Margin specified in the Kewaunee SE is essentially the same as presented earlier in Equations 8 and 9. For the Kewaunee RPV, the NRC estimated a value of 14°F for σ_I, which is slightly more conservative than the actual value of 11.9°F determined for weld 72442 [6]. The effect of uncertainty in shift (σ_Δ) should be less significant for weld heat 72442 since the best estimate Cu (0.26 wt%) is above the embrittlement saturation level for Linde 80 flux welds of 0.25 wt% Cu [22,23]. Thus, a conservative level of uncertainty is being applied when the value of σ_Δ is set at 28°F, based on the methodology used by the NRC. The NRC allowed a 2°F reduction in the inherent margin in determining RT_{To} (i.e., NRC allowed $RT_{To} = T_o + 33°F$). This reduction in the definition of RT_{To} is too small to have any practical importance, but it is used here. The overall margin considering these parameters is a value of 60.5°F (Margin = $2\,[(14)^2 + (28)^2]^{1/2} - 2$).

Using Equation 13, with the values just discussed to be consistent with the NRC approach, the fifth and sixth rows of Table 4-1 illustrate the calculation of ART at EOL and EOLE. When the NRC approach is applied to the three irradiated welds tested, the ART values at EOL and EOLE are 235°F and 252°F, respectively, as determined in Tables 4-5 and 4-6. Note that the results are the same. Conservatisms can be adjusted as follows: σ_I reduced to 11.9°F from 14°F based on the measured fracture toughness data; chemistry and temperature adjustments that follow the ASTM E 900-02 correction approach; and, inherent margin of 2°F given back (small conservatism added rather than reduced). With these changes, the EOL and EOLE projections for ART are reduced 13-14°F to 222°F and 238°F, respectively.

The results presented for the use of initial RT_{To} and ΔRT_{To} shift are presented here to illustrate the conservatism in the initial RT_{To} and ΔCVN approach described in the previous section. There is extra margin of at least 20°F even when large uncertainties in the parameters are assumed. All of the projections for ART and RT_{PTS} at EOLE fluence are well below the PTS screening limit of 300°F.

4.4 DIRECT MEASUREMENT OF IRRADIATED RT_{To}

The direct measurement approach was originally submitted to the NRC for the Kewaunee RPV application [24]. The NRC did not accept this approach since it is a change to the current regulatory practice of using the shift-based approach in Regulatory Guide 1.99, Rev. 2 and the PTS Rule (10 CFR 50.61). The application for PBNP-2 requires extrapolation to higher fluences to assess PTS at EOL and EOLE fluences. The direct use of the irradiated RT_{To} values was the intent of ASME Code Case N-629, but the selection of margin to address uncertainties intentionally was left to be defined in regulatory space. The first application for Kewaunee saw the NRC add higher margin for Master Curve use than that needed using the current regulatory practice. The issues of

using direct measurement and development of a more reasonable margin will be addressed in several international forums over the next few years.

The simplicity of the direct measurement approach is discussed next. The three measures of irradiated RT_{To} (properly adjusted for 3PB bias) are used without extrapolating from zero fluence. The three measured values cover a small range of fluence, so the three values of irradiated RT_{To} are adjusted for chemistry and temperature using the ASTM E 900-02 approach described in section 4.1.2 and then averaged, as well as the fluence. The result is RT_{irr} = 129°F at a fluence of 1.39 x 10^{19} n/cm^2. This value is then extrapolated to the higher EOL and EOLE fluence using the same fluence function as used for CVN data. The FF(ϕt) relationship from Regulatory Guide 1.99, Rev. 2 is used since it has been shown to be essentially the same shape as the more complex relationship in the ASTM E 900-02 correlation model [22]. This functional form has also been shown to match the database of irradiated Linde 80 weld fracture toughness data in the BAW-2308 study [6].

The ART using the direct measurement approach involves a form similar to that in Equation 13, except the extrapolation is from the measured RT_{irr} to the EOL and EOLE fluences:

$$ART = RT_{irr} + CF * \Delta FF(\phi t) + Margin \qquad (14)$$

where CF is taken as the Charpy-based CF of 180°F, which is conservative relative to the fracture toughness-based CF values shown earlier. This extrapolation from RT_{irr} is small compared to starting at the unirradiated condition ($RT_{To(U)}$); $\Delta FF(\phi t)$ is the difference in FF(ϕt) between the irradiated point and the EOL and EOLE fluences. The resulting RT_{irr} (EOL) and RT_{irr} (EOLE) are listed in the last rows of Table 4-1.

The development of the Margin is based on the uncertainties in the important parameters affecting irradiation changes in fracture toughness. These parameters and their corresponding uncertainties are: copper content, nickel content, irradiation temperature (T_{irr}), and fluence (ϕt). Other uncertainties that also need to be included are material variability (σ_{MC}), accuracy of the measured irradiated T_o (σ_{To}), and projection to higher fluences (σ_{Proj}). The irradiation sensitive parameters can be determined from the ASTM E 900-02 model for embrittlement. The way that an uncertainty in an independent variable propagates through the model to produce an uncertainty in the predicted value can be estimated through a simple error analysis. The effect of the uncertainty in the independent variable on the prediction uncertainty can be determined by taking the partial differential of the prediction equation. The model provides a function $f(x_1,x_2,x_3,...)$, where x_i represents the ith independent variable. The contribution of uncertainty in x_i to the uncertainty in the prediction, dP, is:

$$d_iP = \partial f / \partial x_i \, dx_i \qquad (15)$$

If the uncertainties in the independent variables are truly independent, then the composite uncertainty can be determined by taking the square root of the sum of the squares of the individual contributions. The uncertainties in the predictions are not constant and can vary as a function of fluence. Values of dx_i must be established from measurements or other methods of assessing the uncertainty of the parameters. Table 4-7 summarizes the estimates of uncertainties in the E 900-02 model parameters and the calculated uncertainties in the prediction of RT_{irr}. These prediction uncertainties, and the uncertainties associated with material variability, the determination of RT_{To}, and projections from the measured fluence where RT_{To} has been determined, can be used to assess Margin:

$$\text{Margin} = 2\,[\sigma_{MC}^2 + \sigma_{To}^2 + \sigma_{Cu}^2 + \sigma_{Ni}^2 + \sigma_{Tirr}^2 + \sigma_{\phi t}^2 + \sigma_{Proj}^2]^{1/2} \qquad (16)$$

σ_{MC} is the value determined in BAW-2308 [6] from Monte Carlo runs using the non-irradiated 72442 weld data (9.3°F). σ_{To} is the uncertainty calculated as $\beta/N^{1/2}$, where N is the number of valid test results used to determine the irradiated T_o, and β is the statistical quantity from ASTM E 1921-02 [3]; for an individual data set of 10 valid tests, σ_{To} is 10.7°F. σ_{Proj} is determined by the uncertainty in CF that can be generated by the uncertainties in Cu, Ni, irradiation temperature, and fluence in Table 4-7; the result is an uncertainty in CF of 5°F, which gives σ_{Proj} of 1.0°F at EOL and 1.6°F at EOLE. σ_{Cu}, σ_{Ni}, σ_{Tirr}, and $\sigma_{\phi t}$ are the prediction values from Table 4-7 and are based on the statistics of the measured Cu and Ni values from Table 2-3 and estimates of how well known the irradiation temperature and fluence values are known.

The Margin values are listed in Table 4-1 for EOL and EOLE. These Margins are added to the projections for RT_{irr} at EOL and EOLE to give the results for ART. These low ART values illustrate that there is even more conservatism in the B&W Owners Group and NRC methods of determining ART and RT_{PTS}.

Note that some of the assumptions used to develop the Margin term from Equation 16 also may have additional conservatisms. For example, the fluence projections for the PBNP-2 circumferential weld are based upon calculations [26] that involve conservative assumptions. These assumptions include using calculations rather than measurement adjustments, not adjusting calculation results by use of the FERRET code, removal of hafnium flux reduction from the PBNP-2 core, implementation of the maximum power up-rate under consideration, and a future capacity factor of 95%. All of these factors together will produce conservative estimates of projected fluences at EOL and EOLE. Therefore, using the $\sigma_{\phi t}$ term derived from the ASTM E 900-02 model overstates the true uncertainty.

Figure 4-1 compares the Master Curve projection of ART using all three Master Curve methods with the projection based on the current regulatory Charpy methodology. The Master Curve approaches do not approach the PTS screening criterion even well beyond EOLE. The Master Curve data points are plotted in Figure 4-1 without added Margin and are all below the Master Curve-based ART projections. The Master curve data have been corrected for temperature and chemistry to match the PBNP-2 vessel weld using the

ASTM E 900-02 adjustments. Further validation of these results will come from future testing of weld metal fracture toughness specimens irradiated to near EOL and EOLE fluences.

Table 4-1
Comparisons of Reference Temperature Methods and Results

Method of Analysis	Term	Material and Margin Properties				Inside Surface ART= RT_{PTS} Determination		
		Initial RT_{NDT} or RT_{To} (°F)	CF (°F)	Margin (°F)	See Notes	Fluence Factor	ΔRT_{NDT} (°F)	ART = RT_{PTS} (°F)
Current Regulation	EOL	-5	180	68.5	A	1.301	234.1	298
	EOLE	-5	180	68.5	A	1.406	253.0	316
$RT_{To(U)}$ + ΔCVN + Margin (B&WOG)	EOL	-38	180	60.8	B	1.301	234.1	257
	EOLE	-38	180	60.8	B	1.406	253.0	276
$RT_{To(U)}$ + ΔRT_{To} + Margin (NRC)	EOL	-38	163	60.5	C	1.301	212.4	235
	EOLE	-38	163	60.5	C	1.406	229.5	252
Direct Use of Irr. RT_{To}	EOL	--	180	42.1	D	1.301	RT_{Irr} = 166.7	209
	EOLE	--	180	42.9	D	1.406	RT_{Irr} = 185.6	229

Notes:

A Generic value of IRT (Initial RT_{NDT}) for a Linde 80 weld with σ_I = 19.7°F and table value for CF since B&WOG surveillance data are non-credible and table value of CF is conservative with σ_Δ = 28°F; Margin = 2 $(\sigma_I^2 + \sigma_\Delta^2)^{1/2}$ = 2 $[(19.7)^2 + (28)^2]^{1/2}$ = 68.5°F.

B B&W Owners Group (B&WOG) approach **[Error! Bookmark not defined.]** using measured combined Initial.RT_{To} ($RT_{To(U)}$) from Table 3-8 (T_o + 35°F) with σ_I = 11.9°F (based on combined material uncertainty, σ_{MC}, of 9.3°F and uncertainty in the determination of T_o, σ_{To}, of 7.4°F) and table value for CF since B&WOG surveillance data are non-credible and table value of CF is conservative with σ_Δ = 28°F; Margin = 2 $(\sigma_I^2 + \sigma_\Delta^2)^{1/2}$ = 2 $[(11.9)^2 + (28)^2]^{1/2}$ = 60.8°F.

C Procedure matching the Kewaunee SE calculation approach [5] with measured Initial RT_{To}, σ_I = 14°F, σ_Δ = 28°F, and credit for inherent margin of 2°F; Margin = 2 $(\sigma_I^2 + \sigma_\Delta^2)^{1/2}$ - 2 = 2 $[(14)^2 + (28)^2]^{1/2}$ – 2 = 60.5°F.

D The most comprehensive approach using the measured irradiated RT_{To} values and projecting them forward without reliance on the non-irradiated condition using realistic uncertainties to obtain a Margin term; Margin = 2 $(\sigma_{MC}^2 + \sigma_{To}^2 + \sigma_{Cu}^2 + \sigma_{Ni}^2 + \sigma_{Tirr}^2 + \sigma_{\phi t}^2 + \sigma_{Proj}^2)^{1/2}$; at EOL, Margin = 2 $[(9.3)^2 + (10.7)^2 + (1.6)^2 + (4.1)^2 + (6.9)^2 + (13.2)^2 + (1.0)^2]^{1/2}$ = 42.1°F; at EOLE, Margin = 2 $[(9.3)^2 + (10.7)^2 + (1.7)^2 + (4.2)^2 + (8.9)^2 + (12.5)^2 + (1.6)^2]^{1/2}$ = 42.9°F

Table 4-2
NRC Method [5] for Correcting ΔRT_{To} Values for Chemistry and Irradiation Temperature Differences

Material & Capsule	Measured ΔRT_{To} (°F)	Temperature Adjustment*	Chemistry Adjustment**	Adjusted ΔRT_{To} (°F)
SA-1484/A3	183	1.142	1.008	210.7
WF-67/L1	113	1.230	1.078	149.8
WF-67/LG2	132	1.197	1.078	170.3

* Ratio of (Measured ΔRT_{To} + 26°F) / Measured ΔRT_{To}; NRC use of degree of reference temperature shift correction per degree of irradiation temperature difference
** Ratio of Regulatory Guide 1.99, Rev. 2 [12] CF for PBNP-2 RPV weld to the specific surveillance weld

Table 4-3
ASTM E900-02 [22] Corrections of ΔRT_{To} Values for Chemistry and Irradiation Temperature Differences

Material & Capsule	Measured ΔRT_{To} (°F)	Temperature Adjustment*	Chemistry Adjustment**	Adjusted ΔRT_{To} (°F)
SA-1484/A3	183	1.095	1.009	202.2
WF-67/L1	113	1.095	1.096	135.6
WF-67/LG2	132	1.104	1.094	159.4

* Ratio of shift prediction with different irradiation temperatures considered using ASTM E 900-02
** Ratio of shift predictions with difference copper and nickel chemistries using ASTM E 900-02

Table 4-4
Summary of ΔRT_{To} Values Corrected for Differences in Chemistry and Irradiation Temperature and Calculation of CF_{To}

Material & Capsule	Measured ΔRT_{To} (°F)*	Adjusted** ΔRT_{To} (°F)	Fluence, 10^{19} n/cm^2 (E>1 MeV)	Fluence Function (FF)	Adjusted Shift X FF	FF^2
SA-1484/A3	182	209.7	1.25	1.062	222.7264	1.1282135
WF-67/L1	115	152.0	1.255	1.063	161.5929	1.1305620
WF-67/LG2	134	172.5	1.66	1.140	196.5448	1.2988859
				Σ =	580.6441	3.5576614
				CF_{To} = 163.3 deg. F		

* These shift values are based on the measured irradiated RT_{To} and the combined non-irradiated RT_{To}
** Adjustments are made using the NRC methodology for chemistry and temperature.

Table 4-5
NRC Method [5] for Determining ART at EOL Fluence

Material & Capsule	Chemistry and Temperature Adjusted ΔRT_{To} (°F)	Fluence Function Ratio*	Total Adjusted ΔRT_{To} (°F)	Adjusted RT_{irr} (°F)	Margin** (°F)	ART (°F)
SA-1484/A3	210.7	1.225	258.0	219.0	60.5	279.5
WF-67/L1	149.8	1.223	183.3	147.3	60.5	207.8
WF-67/LG2	170.3	1.141	194.4	158.4	60.5	218.9
					Average	235

* Ratio of the fluence functions between the RPV at EOL and the surveillance capsule
** The margin established by NRC in the Kewaunee SE (Margin = $2\,[(14)^2 + (28)^2]^{1/2} - 2$)

Table 4-6
NRC Method [5] for Determining ART at EOLE Fluence

Material & Capsule	Chemistry and Temperature Adjusted ΔRT_{To} (°F)	Fluence Function Ratio*	Total Adjusted ΔRT_{To} (°F)	Adjusted RT_{irr} (°F)	Margin** (°F)	ART (°F)
SA-1484/A3	210.7	1.323	278.8	239.8	60.5	300.3
WF-67/L1	149.8	1.322	198.1	162.1	60.5	222.6
WF-67/LG2	170.3	1.233	210.0	174.0	60.5	234.5
					Average	252

* Ratio of the fluence functions between the RPV at EOLE and the surveillance capsule
** The margin established by NRC in the Kewaunee SE (Margin = $2\,[(14)^2 + (28)^2]^{1/2} - 2$)

Table 4-7
Calculations of Prediction Uncertainties for ASTM E 900-02 Model Parameters at EOL and EOLE

Parameter	Uncertainty in Parameter	Uncertainty in Prediction at EOL (°F)	Uncertainty in Prediction at EOLE (°F)
Cu	15.3%	1.6	1.7
Ni	0.023 wt%	4.1	4.2
T_{irr}	5°F	13.2	12.5
ϕt	10%	6.9	8.9

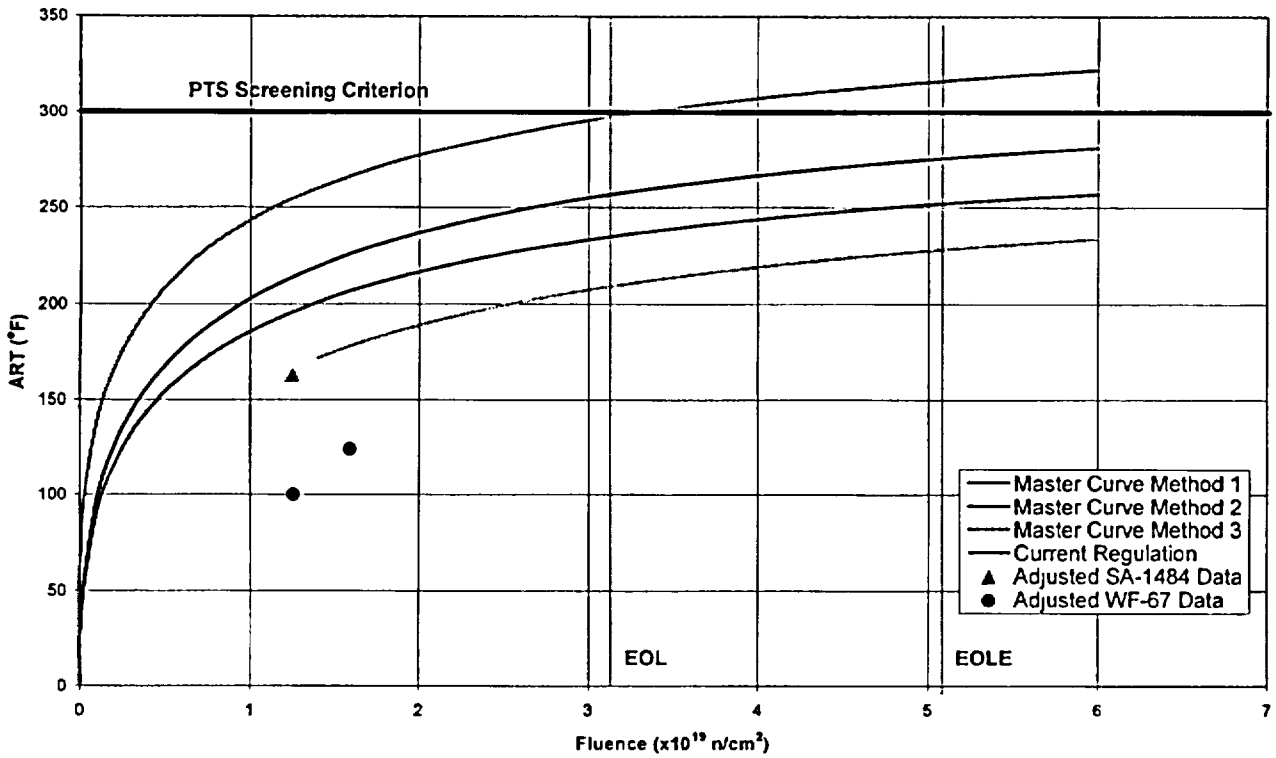

Figure 4-1

Comparisons of Projected ART from Master Curve and Current Regulation for Weld Wire 72442 (Adjusted Master Curve Data Do Not Have Margin Added)

5 SUPPLEMENTAL SURVEILLANCE PROGRAM

5.1 HISTORY OF EXISTING PROGRAM

The original PBNP-2 surveillance program was prepared in accordance with ASTM E 185-66 and consisted of six surveillance capsules attached to the outside of the reactor internals thermal shield. Each capsule contained mechanical specimens, dosimetry, and thermal monitors. The mechanical specimens were fabricated from material representative of the PBNP-2 RPV. The materials included the lower and intermediate shell forging materials and a weld similar in chemistry to the circumferential weld connecting these two shell courses. A pre-irradiation (baseline) evaluation of the strength and Charpy toughness of the surveillance materials was performed.

Westinghouse Electric Company developed the original surveillance program for the PBNP-2 reactor vessel. Although the original program was in accordance with ASTM E 185-66, subsequent testing has followed the latest version of ASTM E 185 that was been approved by the NRC, through ASTM E 185-82. A description of the surveillance program and the pre-irradiation mechanical properties of the reactor vessel materials are presented in WCAP-7712 [11]. Four surveillance capsules have been withdrawn and tested to date. One of the standby capsules has been removed and is being stored at Point Beach. Table 5-1 presents a summary of the PBNP-2 surveillance program and materials. A summary of the surveillance test results for the forging materials is provided in Section 2.

The surveillance materials are contained in capsules positioned in the reactor between the thermal shield and vessel as shown in Figure 5-1. This figure also includes the numbering system for the capsule specimens and their locations. The irradiation conditions (temperature, neutron spectrum, and flux) for the capsule are very similar to those of the reactor vessel. Each capsule contains Charpy V-Notch, tensile, and 1X-Wedge-Opening-Loading fracture toughness specimens in the quantities identified in Table 5-2.

Since the actual heat of the limiting weld metal is not in the PBNP-2 surveillance program, participation in the B&W Owners Group allowed access to irradiated surveillance data of 72442 welds. The results from these irradiations have been documented elsewhere [13]. The weld metal results are summarized in Section 2.

5.2 REVIEW OF REMAINING CAPSULES

The remaining standby PBNP-2 surveillance capsules (Capsules N and P) do not include weld heat 72442. Therefore, they are of no use in validating the Master Curve projections in Section 4. However, surveillance capsules are being irradiated in the B&W Owners Group Master Integrated Reactor Vessel Surveillance Program (MIRVP) and include Heat 72442 [27]. Details on these capsules are provided in Table 5-3.

These capsules contain several Charpy V-notch and compact fracture toughness specimens of the WF-67 weld material. Two of these capsules have a target fluence of 3.0×10^{19} n/cm^2, which is approximately the projected EOL fluence for PBNP-2. Capsule A1 was scheduled for removal from Davis Besse in 2008. Capsule A4 in Crystal River 3 should be available at about this same time depending upon the actual operating schedule. The exact status for capsule A1 will depend upon a revised operation schedule at Davis Besse once the issues associated with the reactor vessel head are resolved. Since these two capsules are essentially redundant to each other, the loss of one would not affect the ability to produce Master Curve fracture toughness results applicable to the PBNP-2 vessel. Capsule L2 in Davis Besse has a lower target fluence and has little relevance for the PBNP-2 vessel. When any or all of these specimens are tested, the new results will be integrated with the existing data described in Section 4 to further assess RPV integrity.

5.3 DESCRIPTION OF NEW SUPPLEMENTAL SURVEILLANCE CAPSULE

In addition, a new PBNP-2 surveillance capsule has been installed for the purpose of obtaining relevant fracture toughness data at the EOLE fluence. The new PBNP-2 surveillance capsule contains surveillance specimens that will be used to directly measure the fracture toughness of the PBNP-2 weld metal heat 72442 as well as materials from PBNP-1 and Davis Besse. The supplemental capsule contains the materials and specimens identified in Table 5-4.

The target fluence for the PBNP-2 supplemental surveillance materials will correspond to the PBNP-2 peak reactor vessel fluence at EOLE. Surveillance data obtained from this capsule will provide direct fracture toughness measurements for the 72442 weld metal near the maximum fluence at EOLE. These data will provide direct evidence to validate previous reactor vessel life assessments and a measure of the actual margins available for the PBNP-2 RPV.

5.4 SUPPLEMENTAL CAPSULE IRRADIATION AND WITHDRAWAL SCHEDULE

The supplemental surveillance capsule for PBNP-2 will be irradiated to a target fluence equivalent to the extended end of operating license life (EOLE) fluence for the limiting weld metal. Irradiation to this fluence will allow fracture toughness measurements to be directly obtained to demonstrate adequate reactor vessel toughness throughout the license renewal term.

As discussed in Section 2, the peak PBNP-2 reactor vessel fluence will change significantly from previous estimates because of the possible decision to eliminate the hafnium flux reduction program and to implement power up-rates. The revised EOLE peak fluence estimate for the PBNP-2 circumferential weld is 5.085×10^{19} n/cm^2 and considers the affects of hafnium removal and power up-rate.

The supplemental surveillance capsule for PBNP-2 was installed following Cycle 25. Table 5-5 provides details of the PBNP-2 supplemental surveillance capsule fluence projections.

Based on the fuel management strategies and power up-rates planned for PBNP-2, the supplemental surveillance capsule should be removed and tested at just over 38 EFPY, which is expected to be obtained by the outage following Cycle 33 (based on implementation of 2-year refueling outage intervals for future plant operation). This refueling outage is estimated to occur during the year 2017.

It is recommended that the PBNP-2 peak reactor vessel fluence and the fluence for the supplemental surveillance capsule be re-evaluated in the future to reflect actual reactor operation. As further reactor operation occurs, better vessel and capsule fluence estimates can be made and a more definitive capsule withdrawal schedule may be established.

Table 5-1
PBNP-2 Surveillance Program

Capsule	Lead Factor	Removal Time	Comments
V	3.37	1.52 EFPY (End of first core cycle)	4.74×10^{18} n/cm^2, E > 1 MeV
T	1.94	3.45 EFPY	9.45×10^{18} n/cm^2, E > 1 MeV
R	3.37	5.1 EFPY	2.01×10^{19} n/cm^2, E > 1 MeV
S	1.79	14.8 EFPY	3.47×10^{19} n/cm^2, E > 1 MeV
P	1.94	19.5 EFPY	Capsule was removed and stored in spent fuel pool. Target fluence was 3.40×10^{19} n/cm^2, E > 1 MeV
N	1.79	Standby	Target Fluence is 5.00×10^{19} n/cm^2, E > 1 MeV

Table 5-2
Type and Number of Specimens in the PBNP-2
Surveillance Test Capsules

Material	Specimen Types and Number		
	CVN	Tensile	1X-WOL
Weld WF-193	8	3 (0)*	3 (0)*
Forging 123V500	12	3 (4)*	3 (4)*
Forging 122W195	12	3 (5)*	3 (5)*
HAZ, Heat 122W195	8	0	0

* The first number represents the number of specimens in Capsules R, S, and V. The number in parentheses represents the number of specimens in Capsules N, P, and T.

Table 5-3
Remaining MIRVP Capsules Containing Heat 72442

Capsule ID	Host Plant	Target Fluence	Material	Specimen Quantities in Each Capsule
A1	Davis Besse 1	3.00×10^{19}	WF-67	4 – Tensile 12 – CVN 5 – 0.936 TRCT
L2	Davis Besse 1	1.70×10^{19}	WF-67	
A4	Crystal River 3	3.00×10^{19}	WF-67	

Table 5-4
PBNP-2 and Other Materials and Specimen Types in Supplemental Capsule

Material	Number and Type of Specimens		
	CVN	½T-CT	Tensile
Weld Metal Heat 72442 (WF-67) PBNP-2 Intermediate to Lower Shell Circumferential Weld	10	12	2
Plate Material Heat A9811-1 PBNP-1 Intermediate Shell	10	0	2
Weld Metal Heat 71249 (SA-1101) PBNP-1 Intermediate to Lower Shell Circumferential Weld	10	12	2
FENOC Weld Metal Heat 821T44 (WF-182-1) Davis Besse Intermediate to Lower Shell Circumferential Weld	14	8	2
Total Specimens	**44**	**32**	**8**

Table 5-5
PBNP-2 Fuel Cycles and Estimated Surveillance Capsule Fluence

Projected RPV Fluence at 53 EFPY: 5.085 x 10^{19} n/cm^2				
EFPY	RPV Accumulated Fluence (10^{19} n/cm^2)[(a)]	RPV Cycle Fluence (10^{19} n/cm^2)[(a)]	Capsule Cycle Fluence (10^{19} n/cm^2)[(b)]	Capsule Accumulated Fluence (10^{19} n/cm^2)[(b)]
23.6	2.06	n/a	n/a	0.000
26.0	2.31	0.25	0.843	0.843
28.0	2.51	0.20	0.674	1.517
30.0	2.72	0.21	0.708	2.224
32.0	2.92	0.20	0.674	2.898
34.0	3.13	0.21	0.708	3.606
36.0	3.34	0.21	0.708	4.314
38.0	3.54	0.20	0.674	4.988
40.0	3.75	0.21	0.708	5.695
42.0	3.95	0.20	0.674	6.369
44.0	4.16	0.21	0.708	7.077
46.0	4.37	0.21	0.708	7.785
48.0	4.57	0.20	0.674	8.459
50.0	4.78	0.21	0.708	9.166

(a) RPV accumulated fluence was determined from Reference [26]; RPV cycle fluence is the arithmetic difference from the preceding accumulated fluence value.

(b) The lead factor for the supplemental surveillance capsule is 3.37. The capsule cycle fluence is the product of the lead factor and the RPV cycle fluence. Capsule accumulated fluence is the sum of capsule cycle fluences from time of capsule insertion to the EFPY of interest.

Figure 5-1
Arrangement of Surveillance Capsules in the Reactor Vessel

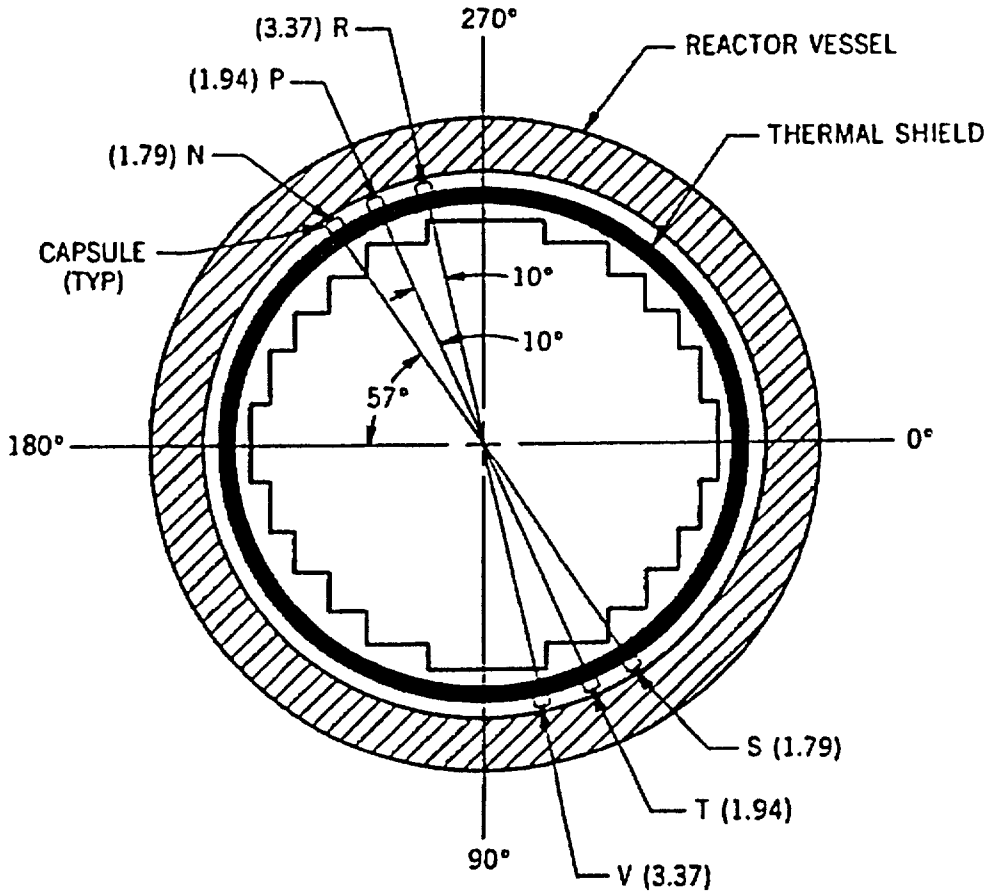

6 SUMMARY AND CONCLUSIONS

This report summarizes the fracture toughness testing that has been conducted to date on the PBNP-2 RPV limiting weld metal heat 72442. This weld metal was not included in the current surveillance program for PBNP-2, but it was irradiated as part of the B&W Owners Group integrated surveillance program. The latest projections based on Charpy impact testing, when analyzed following NRC guidelines and rules, indicate that the RPV material will reach the PTS screening criterion limit before EOLE. Therefore, fracture toughness testing of other irradiated surveillance specimens (from two different welds fabricated using weld wire 72442) has been performed and analyzed using the Master Curve methodology following ASME Code Cases N-629 and N-631. Use of the Master Curve methodology involves engineering assessment in applying the ASME Code Cases to an actual RPV. The evaluation performed here involves extrapolation to EOL and EOLE fluences and shows that the RPV limiting weld metal has more than adequate toughness out to EOLE and beyond. These projections will be confirmed by additional testing of weld heat 72442 from the B&W Owners Group MIRVP prior to reaching the EOL fluence at PBNP-2. A supplemental surveillance program also has been designed and implemented at PBNP-2 that includes the limiting weld metal for future evaluation using the Master Curve methodology. The testing of this supplemental capsule at a fluence corresponding to EOLE will confirm the toughness condition for the PBNP-2 RPV weld at about 38 EFPY, which is well before EOLE is reached.

The following observations and conclusions were reached from this current analysis of the limiting beltline weld metal:

- The latest Charpy-based toughness evaluation following current regulation for the PBNP-2 limiting circumferential weld metal indicates that the PTS screening criterion of 300°F will be reached before EOLE when future plant operation is considered (removal of hafnium flux reduction and planned power up-rates).
- Current application of the Master Curve methodology for the PBNP-2 weld metal requires extrapolation (from the three available surveillance irradiations) to the RPV EOLE fluence. This extrapolation can be performed following several different approaches. Three approaches were evaluated here: (1) use of measured initial RT_{To} and adding Charpy shift; (2) use of measured initial RT_{To} and adding the shift in RT_{To} due to irradiation; and, (3) use of the measured irradiated RT_{To} values directly without projection from zero fluence. All methods show that the EOLE RT_{PTS} value is less than the PTS screening limit of 300°F. Method 1 somewhat follows the current regulatory practice and is the most conservative. Method 2 was evaluated following the Kewaunee SE, and the resulting projections in ART were substantially less than Method 1. Method 3 is the most accurate method, and the results obtained applying this direct measurement approach reveal that Method 2 is quite conservative.
- The unirradiated fracture toughness was evaluated using measurements from three weldments of the 72442 weld wire. When precracked Charpy (0.394T-3PB) specimens were used, a bias correction of 18°F was applied; when CT specimens of various sizes were used, no bias correction was used since the assumed level of

constraint is typical of the CT specimen. The three T_o results were within typical data scatter, and all of the data were combined and a single T_o value determined.

- Irradiated fracture toughness data were evaluated for the three different irradiations, all within a small fluence range (less than the RPV weld EOL fluence). A bias correction of 8°F was applied to 0.394T-3PB test results for the two data sets containing these types of specimens. This bias correction for irradiated 3PB specimens appears to be overly conservative based on a comparison of the limited results from the irradiated 0.394T-3PB and 0.936T-RCT tests.
- The Margin term was chosen depending upon the analysis method. For Method 1, Margin was based on three uncertainties: material variability based on a Monte Carlo study from BAW-2308 of weld heat 72442 non-irradiated data (σ_{MC} = 9.3°F), the uncertainty in determining T_o from ASTM E 1921-02 (σ_{To} = 7.4°F), and the current regulatory value for weld metal Charpy shift (σ_{Δ} = 28°F); σ_{MC} and σ_{To} are combined to give a measure of the uncertainty in initial properties (σ_I = 11.9°F). Method 2 used the Margin specified by the NRC in the Kewaunee SE, which used a larger σ_I (14°F) and the same σ_{Δ} of 28°F. Method 3 used a more complete uncertainty analysis: material variability (σ_{MC} = 9.3°F as above), determination of irradiated T_o (σ_{To} = 10.7°F), Cu content (σ_{Cu} = 1.6-1.7°F), Ni content (σ_{Ni} = 4.1-4.2°F), irradiation temperature (σ_{Tirr} = 6.9-8.9°F), fluence ($\sigma_{\phi t}$ = 13.2-12.5°F), and fluence projection (σ_{Proj} = 1.0-1.6°F). Remaining consistent with industry practice, an approximate 95% statistical level (or two sigma) Margin was chosen, where the individual uncertainties were combined as the square root sum of the squares.
- Since there was a need to extrapolate to higher fluence levels (higher than where current fracture toughness measurements exist) to assess PTS and pressure-temperature operating curves, the current Regulatory fluence function for CVN-based predictions was used for the Master Curve approach.
- The supplemental surveillance program utilizes irradiation of the limiting weld metal heat in a new capsule that will be available for testing near the time corresponding to 38 EFPY for the RPV. The direct measurement of fracture toughness for key weld metal will be evaluated at a fluence near the projected EOLE. Fracture toughness data from the B&W Owners Group on this same weld metal will be available around 2008. This B&W Owners Group data should correspond closely to the PBNP-2 EOL fluence for the limiting RPV weld.

7 REFERENCES

1. *Title 10 Code of Federal Register Part 50*, Section 50.61, "Fracture Toughness Requirements for Protection Against Pressurized Thermal Shock Events," June 14, 1991.
2. T. J. Laubham and B. Server, *Point Beach Units 1 and 2 Heatup and Cooldown Limit Curves for Normal Operation*, WCAP-15976, January 2003.
3. ASTM Standard Test Method E 1921-02, "Test Method for the Determination of Reference Temperature, T_o, for Ferritic Steels in the Transition Range," *Annual Book of ASTM Standards*, Vol. 03.01, American Society for Testing and Materials, West Conshohocken, PA.
4. K. K. Yoon, *"Fracture Toughness Characterization of WF-70 Weld Metal,"* B&W Owners Group Report, BAW-2202, September, 1993.
5. *Safety Evaluation by the Office of Nuclear Reactor Including the Use of a Master Curve-based Methodology for Reactor Pressure Vessel Integrity Assessment*, Docket No. 50-305, May 2001.
6. B&W-2308, *Initial RT_{NDT} of Linde 80 Weld Materials*, July 2002.
7. W. L. Server et al., *Master Curve Fracture Toughness Application for BVPS-1*, WCAP-15624, November 2001.
8. *Use of Fracture Toughness Test Data to Establish Reference Temperature for Pressure Retaining Materials, Section XI, Division 1*, Code Case N-629, ASME Boiler and Pressure Vessel Code, American Society of Mechanical Engineers, New York, USA, 1998.
9. *Use of Fracture Toughness Test Data to Establish Reference Temperature for Pressure Retaining Materials Other Than Bolting for Class 1 Vessels Section III, Division 1*, Code Case N-631, ASME Boiler and Pressure Vessel Code, American Society of Mechanical Engineers, New York, USA, 1998.
10. ASTM Standard E 185-82, "Standard Practice for Conducting Surveillance Tests for Light-Water Cooled Nuclear Power Reactor Vessels," *1998 Annual Book of ASTM Standards*, Vol. 12.02, American Society for Testing and Materials, West Conshohocken, PA.
11. S. E. Yanichko and G. C. Yula, *Wisconsin Michigan Power Co. and the Wisconsin Electric Power Co., Point Beach Unit No. 2 Reactor Vessel Radiation Surveillance Program,* WCAP-7712, June 1971.
12. Regulatory Guide 1.99, Revision 2, "Radiation Embrittlement of Reactor Vessel Materials," US Nuclear Regulatory Commission, July 1988.
13. *Response to Request for Additional Information (RAI) Regarding Reactor Pressure Vessel Integrity,* BAW-2325, May 1998.
14. *Best Estimate Copper and Nickel Values in CE Fabricated Reactor Vessel Welds*, CE NPSD-1039, Revision 2, June 1997.
15. M. J. DeVan, K. K. Yoon, and S. Q. King, *Test Results of Capsule CR3-LG2 B&W Owners Group Master Integrated Reactor Vessel Materials Surveillance Program,* BAW-2254, October 1995.
16. M. J. DeVan, *B&WOG Reactor Vessel Working Group Reactor Vessel Materials and Surveillance Data Information,* BAW-2313, Revision 2, December 1999.

17. J. B. Hall and J. W. Newman, Jr., *Analysis of the B&W Owners Group Capsule L1*, BAW-2400, March 2002.
18. J. B. Hall and J. W. Newman, Jr., *Analysis of the B&W Owners Group Capsule A3*, BAW-2412, April 2002.
19. M. Scibetta, *3-D Finite Element Simulation of the PCCv Specimen Statically Loaded in Three-Point Bending*, Report BLG-860, SCK/CEN, Mol, Belgium, March 2000.
20. W. L. Server et al., *Application of Master Curve Fracture Toughness Methodology for Ferritic Steels, Revision 1 (PWRMRP-01)*, EPRI Report TR108390, Rev, 1, Palo Alto, CA, 1999.
21. W. L. Server et al., *Validation of Master Curve Fracture Toughness Methodology for RPV Integrity Assessment (PWRMRP-26)*, EPRI Report 1000707, Palo Alto, CA, 2000.
22. ASTM Standard Guide E 900-02. "Predicting Radiation-Induced Transition Temperature Shift in Reactor Vessel Materials, E706 (IIF)," *Annual Book of ASTM Standards*, Vol. 12.02, American Society for Testing and Materials, West Conshohocken, PA
23. W. L. Server et al., *Charpy Embrittlement Correlations – Status of Combined Mechanistic and Statistical Bases for U.S. Pressure Vessel Steels (MRP-45), PWR Materials Reliability Program (PWRMRP)*, EPRI Report 1000705, Palo Alto, CA, 2001.
24. R. G. Lott et al., *Master Curve Strategies for RPV Assessment*, WCAP-15075, November 1998.
25. M. A. Sokolov and R. K. Nanstad, *Comparison of Irradiation-Induced Shifts of K_{Jc} and Charpy Impact Toughness for Reactor Pressure Vessel Steels*, NUREG/CR-6609, November 2000.
26. LTR-REA-02-23, "Pressure Vessel Neutron Exposure Evaluations, Point Beach Unit 1 and 2," Rev. 0, Westinghouse Electric Company, February 2002.
27. BAW-1543A, Revision 4, Supplement 4, May 2002.

Westinghouse Non-Proprietary Class 3

WCAP-15976
Revision 0

February 2003

Point Beach Units 1 and 2 Heatup and Cooldown Limit Curves for Normal Operation

WCAP-15976, Revision 0

Point Beach Units 1 and 2 Heatup and Cooldown Limit Curves for Normal Operation

T. J. Laubham
Bill Server (ATI)

FEBRUARY 2003

Prepared by the Westinghouse Electric Company LLC
for the Nuclear Management Company, LLC

Approved:_____
J. A. Gresham, Manager
Engineering and Materials Technology

Westinghouse Electric Company LLC
Energy Systems
P.O. Box 355
Pittsburgh, PA 15230-0355

©2003 Westinghouse Electric Company LLC

All Rights Reserved

PREFACE

This report has been technically reviewed and verified by:

J.H. Ledger _____

RECORD OF REVISION

Revision 0: Original Issue

TABLE OF CONTENTS

LIST OF TABLES iv

LIST OF FIGURES v

EXECUTIVE SUMMARY vi

1 INTRODUCTION 1

2 FRACTURE TOUGHNESS PROPERTIES 2

3 CRITERIA FOR ALLOWABLE PRESSURE-TEMPERATURE RELATIONSHIPS 4

4 CALCULATION OF ADJUSTED REFERENCE TEMPERATURE 8

5 HEATUP AND COOLDOWN PRESSURE-TEMPERATURE LIMIT CURVES 23

6 REFERENCES 37

APPENDIX A MASTER CURVE EVALUATION ON PT. BEACH UNIT 2 GIRTH WELD A-1

APPENDIX B DATA POINTS FOR "CIRC-FLAW" PT CURVES B-1

LIST OF TABLES

Table 1 Summary of the Best Estimate Cu and Ni Weight Percent, Initial RT_{NDT} Values and Chemistry Factor values for the Point Beach Unit 1 and 2 Reactor Vessel Materials.....3

Table 2 Summary of the Calculated Peak Pressure Vessel Neutron Fluence Values at 34 and 53 EFPY used for the Calculation of ART Values (n/cm^2, E > 1.0 MeV).....9

Table 3 Summary of the Calculated Fluence Factors used for the Generation of the 34 and 53 EFPY Heatup and Cooldown Curves.....11

Table 4 Calculation of the Pt. Beach Unit 1 ART Values for the 1/4T Location @ 34 EFPY.....14

Table 5 Calculation of the Pt. Beach Unit 1 ART Values for the 3/4T Location @ 34 EFPY.....15

Table 6 Calculation of the Pt. Beach Unit 1 ART Values for the 1/4T Location @ 53 EFPY.....16

Table 7 Calculation of the Pt. Beach Unit 1 ART Values for the 3/4T Location @ 53 EFPY.....17

Table 8 Calculation of the Pt. Beach Unit 2 ART Values for the 1/4T Location @ 34 EFPY.....18

Table 9 Calculation of the Pt. Beach Unit 2 ART Values for the 3/4T Location @ 34 EFPY.....19

Table 10 Calculation of the Pt. Beach Unit 2 ART Values for the 1/4T Location @ 53 EFPY.....20

Table 11 Calculation of the Pt. Beach Unit 2 ART Values for the 3/4T Location @ 53 EFPY.....21

Table 12 Summary of the Limiting ART Values Used in the Generation of the Pt. Beach Unit 1 and 2 Heatup/Cooldown Curves.....22

Table 13 34 EFPY Heatup Curve Data Points Using 1996 App. G & ASME Code Case N-641 (without Uncertainties for Instrumentation Errors).....27

Table 14 34 EFPY Cooldown Curve Data Points Using 1996 App. G & ASME Code Case N-641 (without Uncertainties for Instrumentation Errors).....29

Table 15 53 EFPY Heatup Curve Data Points Using 1996 App. G & ASME Code Case N-641 (without Uncertainties for Instrumentation Errors).....33

Table 16 53 EFPY Cooldown Curve Data Points Using 1996 App. G & ASME Code Case N-641 (without Uncertainties for Instrumentation Errors).....35

LIST OF FIGURES

Figure 1 Point Beach Units 1 and 2 Reactor Coolant System Heatup Limitations (Heatup Rates of 60 & 100°F/hr) Applicable for the First 34 EFPY (Without Margins for Instrumentation Errors) Using 1996 App. G Methodology & ASME Code Case N-641 .25

Figure 2 Point Beach Units 1 and 2 Reactor Coolant System Cooldown Limitations (Cooldown Rates up to 100°F/hr) Applicable for the First 34 EFPY (Without Margins for Instrumentation Errors) Using 1996 App. G Methodology & ASME Code Case N-641 .26

Figure 3 Point Beach Units 1 and 2 Reactor Coolant System Heatup Limitations (Heatup Rates of 60 & 100°F/hr) Applicable for the First 53 EFPY (Without Margins for Instrumentation Errors) Using 1996 App. G Methodology & ASME Code Case N-641 .31

Figure 4 Point Beach Units 1 and 2 Reactor Coolant System Cooldown Limitations (Cooldown Rates up to 100°F/hr) Applicable for the First 53 EFPY (Without Margins for Instrumentation Errors) Using 1996 App. G Methodology & ASME Code Case N-641 .32

EXECUTIVE SUMMARY

This report provides the methodology and results of the generation of heatup and cooldown pressure temperature (PT) limit curves for normal operation of the Point Beach Units 1 and 2 reactor vessels. The PT curves were generated based on the latest available reactor vessel information and updated calculated fluence projections that included the impact of the power uprating and removal of the Hafnium absorber rods.

The new Point Beach Unit 1 and 2 heatup and cooldown pressure-temperature limit curves were generated using adjusted reference temperature (ART) values that bound both units. The highest ART values from the two units were from the Unit 1 and Unit 2 intermediate to lower shell girth welds, however the limiting materials are actually the intermediate and lower shell axial welds from Unit 1, depending on the vessel thickness (¼ thickness or ¾ thickness location). The axial welds become limiting over the girth weld through use of "circ-flaw" methodology from ASME Code Case N-588. This methodology is less restrictive than the standard "axial-flaw" methodology from the 1995 ASME Code, Section XI through the 1996 Addenda. In addition to the use of Code Case N-588, the PT curves also made use of ASME Code Case N-640, which allows the use of the K_{Ic} methodology. Both ASME Code Case N-588 and N-640 were joined together under ASME Code Case N-641.

The PT limit curves were generated for 34 and 53 EFPY using heatup rates of 60 and 100°F/hr and cooldown rates of 0, 20, 40, 60 and 100°F/hr. These curves can be found in Figures 1 through 4.

1 INTRODUCTION

Heatup and cooldown limit curves are calculated using the adjusted RT_{NDT} (reference nil-ductility temperature) corresponding to the limiting beltline region material of the reactor vessel. The adjusted RT_{NDT} of the limiting material in the core region of the reactor vessel is determined by using the unirradiated reactor vessel material fracture toughness properties, estimating the radiation-induced ΔRT_{NDT}, and adding a margin. The unirradiated RT_{NDT} is designated as the higher of either the drop weight nil-ductility transition temperature (NDTT) or the temperature at which the material exhibits at least 50 ft-lb of impact energy and 35-mil lateral expansion (normal to the major working direction) minus 60°F.

RT_{NDT} increases as the material is exposed to fast-neutron radiation. Therefore, to find the most limiting RT_{NDT} at any time period in the reactor's life, ΔRT_{NDT} due to the radiation exposure associated with that time period must be added to the unirradiated RT_{NDT} (IRT_{NDT}). The extent of the shift in RT_{NDT} is enhanced by certain chemical elements (such as copper and nickel) present in reactor vessel steels. The Nuclear Regulatory Commission (NRC) has published a method for predicting radiation embrittlement in Regulatory Guide 1.99, Revision 2, "Radiation Embrittlement of Reactor Vessel Materials."[1] Regulatory Guide 1.99, Revision 2, is used for the calculation of Adjusted Reference Temperature (ART) values ($IRT_{NDT} + \Delta RT_{NDT}$ + margins for uncertainties) at the 1/4T and 3/4T locations, where T is the thickness of the vessel at the beltline region measured from the clad/base metal interface.

The heatup and cooldown curves documented in this report were generated using the most limiting ART values and the NRC approved methodology documented in WCAP-14040-NP-A, Revision 2[2], "Methodology Used to Develop Cold Overpressure Mitigating System Setpoints and RCS Heatup and Cooldown Limit Curves" with exception of the following: 1) **The fluence values used in this report are calculated fluence values (i.e. comply with Reg. Guide 1.190), not the best estimate fluence values.** 2) The K_{Ic} critical stress intensities are used in place of the K_{Ia} critical stress intensities. This methodology is taken from approved ASME Code Case N-641[3] (which covers Code Cases N-640 and N-588). 3) The 1996 Version of Appendix G to Section XI[4] will be used rather than the 1989 version. 4) PT Curves were generated with the most limiting circumferential weld ART value in conjunction with Code Case N-588[3]. These curves, which are included in Appendix A, are bounded by the curves using the standard "axial" flaw methodology from ASME Code 1996 App. G with the ART from the intermediate or lower shell axial welds depending of the flaw location...1/4T versus 3/4T.

The purpose of this report is to present the calculations and the development of the Point Beach Unit 1 and 2 heatup and cooldown curves for 34 and 53 EFPY. This report documents the calculated ART values and the development of the PT limit curves for normal operation. The PT curves herein were generated without instrumentation errors. The PT curves include a hydrostatic leak test limit curve from 2485 psig to 2000 psig, along with the pressure-temperature limits for the vessel flange region per the requirements of 10 CFR Part 50, Appendix G[5].

2 FRACTURE TOUGHNESS PROPERTIES

The fracture-toughness properties of the ferritic materials in the reactor coolant pressure boundary are determined in accordance with the NRC Standard Review Plan [6]. The beltline material properties of the Point Beach Unit 1 and 2 reactor vessels are presented in Table 1.

The chemistry factors were calculated using Regulatory Guide 1.99 Revision 2, Positions 1.1 and 2.1. Position 1.1 uses the tables from the Reg. Guide along with the best estimate copper and nickel weight percents. Position 2.1 uses the surveillance capsule data from all capsules withdrawn to date.

TABLE 1

Summary of the Best Estimate Cu and Ni Weight Percent, Initial RT_{NDT} Values and Chemistry Factor values for the Point Beach Unit 1 and 2 Reactor Vessel Materials

Material Description	wt. % Cu	wt. % Ni	Initial RT_{NDT}	CF
Point Beach Unit 1				
Nozzle Belt Forging (122P237)	*0.11*	*0.82*	50°F	77°F
Inter. Shell Plate (A9811-1)	*0.20*	*0.06*	1°F	88°F/79.3°F[b]
Lower Shell Plate (C1423-1)	*0.12*	*0.07*	1°F	55.3°F/35.8°F[b]
Nozzle Belt to Intermediate Shell Circ. Weld (8T1762)	*0.19*	*0.57*	-5°F	152.4°F
Intermediate Shell Axial Weld - ID 27% (1P0815)	*0.17*	*0.52*	-5°F	138.2°F
Intermediate Shell Axial Weld - OD 73% (1P0661)	*0.17*	*0.64*	-5°F	157.6°F
Intermediate to Lower Shell Girth Weld (71249)	*0.23*	*0.59*	10°F	167.6°F
Lower Shell Axial Weld (61782)	*0.23*	*0.52*	-5°F	157.4°F/163.3°F[b]
Point Beach Unit 2				
Nozzle Belt Forging (123V352)	*0.11*	*0.73*	40°F	76°F
Inter. Shell Forging (123V500)	*0.09*	*0.70*	40°F	58°F
Lower Shell Forging (122W195)	*0.05*	*0.72*	40°F	31°F/43°F
Nozzle Belt to Intermediate Shell Girth Weld (21935)	*0.18*	*0.70*	-56°F[c]	170°F
Intermediate to Lower Shell Circ. Weld (72442)	*0.26*	*0.60*	-5°F	180°F

NOTES:

(a) Data within this table can be found in WCAP-15121, Rev. 1[7] as directed by NMC in Reference 8.

(b) Per Regulatory Guide 1.99, Rev. 2 Position 2.1.

(c) Generic Value of RT_{NDT}.

3 CRITERIA FOR ALLOWABLE PRESSURE-TEMPERATURE RELATIONSHIPS

3.1 OVERALL APPROACH

The ASME approach for calculating the allowable limit curves for various heatup and cooldown rates specifies that the total stress intensity factor, K_I, for the combined thermal and pressure stresses at any time during heatup or cooldown cannot be greater than the reference stress intensity factor, K_{Ic}, for the metal temperature at that time. K_{Ic} is obtained from the reference fracture toughness curve, defined in Code Case N-641, "Alternative Pressure-Temperature Relationship and Low Temperature Overpressure Protection System Requirements Section XI, Division 1"[3 & 4] of the ASME Appendix G to Section XI. The K_{Ic} curve is given by the following equation:

$$K_{Ic} = 33.2 + 20.734 * e^{[0.02(T - RT_{NDT})]} \quad (1)$$

where,

K_{Ic} = reference stress intensity factor as a function of the metal temperature T and the metal reference nil-ductility temperature RT_{NDT}

This K_{Ic} curve is based on the lower bound of static critical K_I values measured as a function of temperature on specimens of SA-533 Grade B Class1, SA-508-1, SA-508-2, SA-508-3 steel.

3.2 METHODOLOGY FOR PRESSURE-TEMPERATURE LIMIT CURVE DEVELOPMENT

The governing equation for the heatup-cooldown analysis is defined in Appendix G of the ASME Code as follows:

$$C^* K_{Im} + K_{It} < K_{Ic} \quad (2)$$

where,

K_{Im} = stress intensity factor caused by membrane (pressure) stress

K_{It} = stress intensity factor caused by the thermal gradients

K_{Ic} = function of temperature relative to the RT_{NDT} of the material

C = 2.0 for Level A and Level B service limits

C = 1.5 for hydrostatic and leak test conditions during which the reactor core is not critical

For membrane tension, the corresponding K_I for the postulated defect is:

$$K_{Im} = M_m \times (pR_i / t) \quad (3)$$

where, M_m for an inside surface flaw is given by:

M_m = 1.85 for $\sqrt{t} < 2$,
M_m = $0.926\sqrt{t}$ for $2 \leq \sqrt{t} \leq 3.464$,
M_m = 3.21 for $\sqrt{t} > 3.464$

Similarly, M_m for an outside surface flaw is given by:

M_m = 1.77 for $\sqrt{t} < 2$,
M_m = $0.893\sqrt{t}$ for $2 \leq \sqrt{t} \leq 3.464$,
M_m = 3.09 for $\sqrt{t} > 3.464$

and p = internal pressure, Ri = vessel inner radius, and t = vessel wall thickness.

For bending stress, the corresponding K_I for the postulated defect is:

K_{Ib} = M_b * Maximum Stress, where M_b is two-thirds of M_m

The maximum K_I produced by radial thermal gradient for the postulated inside surface defect of G-2120 is $K_{It} = 0.953 \times 10^{-3} \times CR \times t^{2.5}$, where CR is the cooldown rate in °F/hr., or for a postulated outside surface defect, $K_{It} = 0.753 \times 10^{-3} \times HU \times t^{2.5}$, where HU is the heatup rate in °F/hr.

The through-wall temperature difference associated with the maximum thermal K_I can be determined from Fig. G-2214-1. The temperature at any radial distance from the vessel surface can be determined from Fig. G-2214-2 for the maximum thermal K_I.

(a) The maximum thermal K_I relationship and the temperature relationship in Fig. G-2214-1 are applicable only for the conditions given in G-2214.3(a)(1) and (2).

(b) Alternatively, the K_I for radial thermal gradient can be calculated for any thermal stress distribution and at any specified time during cooldown for a ¼-thickness inside surface defect using the relationship:

$$K_{It} = (1.0359C_0 + 0.6322C_1 + 0.4753C_2 + 0.3855C_3) * \sqrt{\pi a} \quad (4)$$

or similarly, K_{IT} during heatup for a ¼-thickness outside surface defect using the relationship:

$$K_{It} = (1.043C_0 + 0.630C_1 + 0.481C_2 + 0.401C_3) * \sqrt{\pi a} \quad (5)$$

where the coefficients C_0, C_1, C_2 and C_3 are determined from the thermal stress distribution at any specified time during the heatup or cooldown using the form:

$$\sigma(x) = C_0 + C_1(x/a) + C_2(x/a)^2 + C_3(x/a)^3 \quad (6)$$

and x is a variable that represents the radial distance from the appropriate (i.e., inside or outside) surface to any point on the crack front and a is the maximum crack depth.

Note, that equations 3, 4 and 5 were implemented in the OPERLIM computer code, which is the program used to generate the pressure-temperature (P-T) limit curves. No other changes were made to the OPERLIM computer code with regard to P-T calculation methodology. Therefore, the P-T curve methodology is unchanged from that described in WCAP-14040, "Methodology used to Develop Cold Overpressure Mitigating System Setpoints and RCS Heatup and Cooldown Limit Curves"[2] Section 2.6 (equations 2.6.2-4 and 2.6.3-1) with the exceptions just described above.

At any time during the heatup or cooldown transient, K_{Ic} is determined by the metal temperature at the tip of a postulated flaw at the 1/4T and 3/4T location, the appropriate value for RT_{NDT}, and the reference fracture toughness curve. The thermal stresses resulting from the temperature gradients through the vessel wall are calculated and then the corresponding (thermal) stress intensity factors, K_{It}, for the reference flaw are computed From Equation 2, the pressure stress intensity factors are obtained and, from these, the allowable pressures are calculated.

For the calculation of the allowable pressure versus coolant temperature during cooldown, the reference flaw of Appendix G to the ASME Code is assumed to exist at the inside of the vessel wall. During cooldown, the controlling location of the flaw is always at the inside of the wall because the thermal gradients produce tensile stresses at the inside, which increase with increasing cooldown rates. Allowable pressure-temperature relations are generated for both steady-state and finite cooldown rate situations. From these relations, composite limit curves are constructed for each cooldown rate of interest.

The use of the composite curve in the cooldown analysis is necessary because control of the cooldown procedure is based on the measurement of reactor coolant temperature, whereas the limiting pressure is actually dependent on the material temperature at the tip of the assumed flaw. During cooldown, the 1/4T vessel location is at a higher temperature than the fluid adjacent to the vessel inner diameter. This condition, of course, is not true for the steady-state situation. It follows that, at any given reactor coolant temperature, the ΔT (temperature) developed during cooldown results in a higher value of K_{Ic} at the 1/4T location for finite cooldown rates than for steady-state operation. Furthermore, if conditions exist so that the increase in K_{Ic} exceeds K_{It}, the calculated allowable pressure during cooldown will be greater than the steady-state value.

The above procedures are needed because there is no direct control on temperature at the 1/4T location and, therefore, allowable pressures may unknowingly be violated if the rate of cooling is decreased at various intervals along a cooldown ramp. The use of the composite curve eliminates this problem and ensures conservative operation of the system for the entire cooldown period.

Three separate calculations are required to determine the limit curves for finite heatup rates. As is done in the cooldown analysis, allowable pressure-temperature relationships are developed for steady-state conditions as well as finite heatup rate conditions assuming the presence of a 1/4T defect at the inside of the wall. The heatup results in compressive stresses at the inside surface that alleviate the tensile stresses produced by internal pressure. The metal temperature at the crack tip lags the coolant temperature; therefore, the K_{Ic} for the 1/4T crack during heatup is lower than the K_{Ic} for the 1/4T crack during steady-state conditions at the same coolant temperature. During heatup, especially at the end of the transient, conditions may exist so that the effects of compressive thermal stresses and lower K_{Ic} values do not offset each other, and the pressure-temperature curve based on steady-state conditions no longer represents a lower bound of all similar curves for finite heatup rates when the 1/4T flaw is considered. Therefore, both cases have to be analyzed in order to ensure that at any coolant temperature the lower value of the allowable pressure calculated for steady-state and finite heatup rates is obtained.

The second portion of the heatup analysis concerns the calculation of the pressure-temperature limitations for the case in which a 1/4T flaw located at the 1/4T location from the outside surface is assumed. Unlike the situation at the vessel inside surface, the thermal gradients established at the outside surface during heatup produce stresses, which are tensile in nature and therefore tend to reinforce any pressure stresses present. These thermal stresses are dependent on both the rate of heatup and the time (or coolant temperature) along the heatup ramp. Since the thermal stresses at the outside are tensile and increase with increasing heatup rates, each heatup rate must be analyzed on an individual basis.

Following the generation of pressure-temperature curves for both the steady-state and finite heatup rate situations, the final limit curves are produced by constructing a composite curve based on a point-by-point comparison of the steady-state and finite heatup rate data. At any given temperature, the allowable pressure is taken to be the lesser of the three values taken from the curves under consideration. The use of the composite curve is necessary to set conservative heatup limitations because it is possible for conditions to exist wherein, over the course of the heatup ramp, the controlling condition switches from the inside to the outside, and the pressure limit must at all times be based on analysis of the most critical criterion.

3.3 CLOSURE HEAD/VESSEL FLANGE REQUIREMENTS

10 CFR Part 50, Appendix G[5] addresses the metal temperature of the closure head flange and vessel flange regions. This rule states that the metal temperature of the closure flange regions must exceed the material unirradiated RT_{NDT} by at least 120°F for normal operation when the pressure exceeds 20 percent of the preservice hydrostatic test pressure (3107 psi), which is 621 psig for Pt. Beach Unit 1. The limiting unirradiated RT_{NDT} of 60°F occurs in the vessel flange of the Pt. Beach Unit 2 reactor vessel, so the minimum allowable temperature of this region is 180°F at pressures greater than 621 psig. This limit is shown in Figures 1 and 3 wherever applicable.

4 CALCULATION OF ADJUSTED REFERENCE TEMPERATURE

From Regulatory Guide 1.99, Revision 2, the adjusted reference temperature (ART) for each material in the beltline region is given by the following expression:

$$ART = \text{Initial } RT_{NDT} + \Delta RT_{NDT} + \text{Margin} \quad (7)$$

Initial RT_{NDT} is the reference temperature for the unirradiated material as defined in paragraph NB-2331 of Section III of the ASME Boiler and Pressure Vessel Code[9]. If measured values of initial RT_{NDT} for the material in question are not available, generic mean values for that class of material may be used if there are sufficient test results to establish a mean and standard deviation for the class.

ΔRT_{NDT} is the mean value of the adjustment in reference temperature caused by irradiation and should be calculated as follows:

$$\Delta RT_{NDT} = CF * f^{(0.28 - 0.10 \log f)} \quad (8)$$

To calculate ΔRT_{NDT} at any depth (e.g., at 1/4T or 3/4T), the following formula must first be used to attenuate the fluence at the specific depth.

$$f_{(depth\ x)} = f_{surface} * e^{(-0.24x)} \quad (9)$$

where x inches (vessel beltline thickness is 6.5 inches) is the depth into the vessel wall measured from the vessel clad/base metal interface. The resultant fluence is then placed in Equation 8 to calculate the ΔRT_{NDT} at the specific depth.

The Westinghouse Radiation Engineering and Analysis Group evaluated the vessel fluence projections and the results of the **calculated peak fluence values** at various azimuthal locations on the vessel clad/base metal interface are presented in Table 2. The evaluation used the ENDF/B-VI scattering cross-section data set. The calculated fluence projections were determine using methods consistent with Regulatory Guide 1.190, "Calculational and Dosimetry Methods for Determining Pressure Vessel Neutron Fluence."[10]
Table 3 contains the 1/4T and 3/4T fluence factors, per the Regulatory Guide 1.99, Revision 2, used to calculate the ART values for all beltline materials in the Pt. Beach Unit 1 and 2 reactor vessels.

TABLE 2
Summary of the Calculated Peak Pressure Vessel Neutron Fluence Values
at 34 and 53 EFPY used for the Calculation of ART Values
(n/cm^2, E > 1.0 MeV)

Component Description	Surface[a]	1/4T [b]	3/4T [b]
PBNP Unit 1: 34 EFPY (End of Current License)			
Nozzle Belt Forging (122P237)	**0.25**	**0.17**	**0.08**
Inter. Shell Plate (A9811-1)	**3.38**	**2.29**	**1.05**
Lower Shell Plate (C1423-1)	**3.04**	**2.06**	**0.94**
Nozzle Belt to Intermediate Shell Circ. Weld (8T1762)	**0.25**	**0.17**	**0.08**
Intermediate Shell Axial Weld - ID 27% (1P0815)	**2.19**	**1.48**	**0.68**
Intermediate Shell Axial Weld - OD 73% (1P0661)	**2.19**	**1.48**	**0.68**
Intermediate to Lower Shell Circ. Weld (71249)	**3.05**	**2.07**	**0.95**
Lower Shell Axial Weld (61782)	**2.08**	**1.41**	**0.65**
PBNP Unit 1: 53 EFPY (End of License Extension)			
Nozzle Belt Forging (122P237)	**0.42**	**0.28**	**0.13**
Inter. Shell Plate (A9811-1)	**5.26**	**3.56**	**1.63**
Lower Shell Plate (C1423-1)	**4.79**	**3.24**	**1.49**
Nozzle Belt to Intermediate Shell Circ. Weld (8T1762)	**0.42**	**0.28**	**0.13**
Intermediate Shell Axial Weld - ID 27% (1P0815)	**3.44**	**2.32**	**1.07**
Intermediate Shell Axial Weld - OD 73% (1P0661)	**3.44**	**2.32**	**1.07**
Intermediate to Lower Shell Circ. Weld (71249)	**4.91**	**3.32**	**1.52**
Lower Shell Axial Weld (61782)	**3.37**	**2.28**	**1.05**

TABLE 2– Continued
Summary of the Calculated Peak Pressure Vessel Neutron Fluence Values
at 34 and 53 EFPY used for the Calculation of ART Values
(n/cm^2, E > 1.0 MeV)

Component Description	Surface[a]	1/4T [b]	3/4T [b]
PBNP Unit 2: 34 EFPY (End of Current License)			
Nozzle Belt Forging (123V352)	**0.34**	**0.23**	**0.11**
Inter. Shell Forging (123V500)	**3.38**	**2.29**	**1.05**
Lower Shell Forging (122W195)	**3.30**	**2.23**	**1.02**
Nozzle Belt to Intermediate Shell Circ. Weld (21935)	**0.34**	**0.23**	**0.11**
Intermediate to Lower Shell Circ. Weld (72442)	**3.13**	**2.12**	**0.97**
PBNP Unit 2: 53 EFPY (End of License Extension)			
Nozzle Belt Forging (123V352)	**0.55**	**0.37**	**0.17**
Inter. Shell Forging (123V500)	**5.39**	**3.65**	**1.67**
Lower Shell Forging (122W195)	**5.32**	**3.60**	**1.65**
Nozzle Belt to Intermediate Shell Circ. Weld (21935)	**0.55**	**0.37**	**0.17**
Intermediate to Lower Shell Circ. Weld (72442)	**5.09**	**3.46**	**1.58**

NOTES:
(a) These fluence values are the calculated fluence values considering the power uprate without hafnium suppression rods.
(b) Neutron attenuation per Reg. Guide 1.99, Rev. 2

Contained in Table 3 is a summary of the fluence factor (FF) values used in the calculation of adjusted reference temperatures for the Pt. Beach Unit 1and 2 reactor vessel beltline materials for 34 and 53 EFPY.

TABLE 3

Summary of the Calculated Fluence Factors used for the Generation of the 34 and 53 EFPY Heatup and Cooldown Curves

Material	¼ T f (n/cm2, E > 1.0 MeV)	¼ T FF[a]	¾ T f (n/cm2, E > 1.0 MeV)	¾ T FF[a]
PBNP Unit 1: 34 EFPY (End of Current License)				
Nozzle Belt Forging (122P237)	0.17×10^{19}	0.53	0.08×10^{19}	0.37
Inter. Shell Plate (A9811-1)	2.29×10^{19}	1.22	1.05×10^{19}	1.01
Lower Shell Plate (C1423-1)	2.06×10^{19}	1.20	0.94×10^{19}	0.98
Nozzle Belt to Intermediate Shell Circ. Weld (8T1762)	0.17×10^{19}	0.53	0.08×10^{19}	0.37
Intermediate Shell Axial Weld - ID 27% (1P0815)	1.48×10^{19}	1.11	0.68×10^{19}	N/A
Intermediate Shell Axial Weld - OD 73% (1P0661)	1.48×10^{19}	N/A	0.68×10^{19}	0.89
Intermediate to Lower Shell Circ. Weld (71249)	2.07×10^{19}	1.20	0.95×10^{19}	0.99
Lower Shell Axial Weld (61782)	1.41×10^{19}	1.10	0.65×10^{19}	0.88
PBNP Unit 1: 53 EFPY (End of License Extension)				
Nozzle Belt Forging (122P237)	0.28×10^{19}	0.65	0.13×10^{19}	0.47
Inter. Shell Plate (A9811-1)	3.56×10^{19}	1.33	1.63×10^{19}	1.13
Lower Shell Plate (C1423-1)	3.24×10^{19}	1.31	1.49×10^{19}	1.11
Nozzle Belt to Intermediate Shell Circ. Weld (8T1762)	0.28×10^{19}	0.65	0.13×10^{19}	0.47
Intermediate Shell Axial Weld - ID 27% (1P0815)	2.32×10^{19}	1.23	1.07×10^{19}	N/A
Intermediate Shell Axial Weld - OD 73% (1P0661)	2.32×10^{19}	N/A	1.07×10^{19}	1.02
Intermediate to Lower Shell Circ. Weld (71249)	3.32×10^{19}	1.31	1.52×10^{19}	1.12
Lower Shell Axial Weld (61782)	2.28×10^{19}	1.22	1.05×10^{19}	1.01

TABLE 3 - Continued
Summary of the Calculated Fluence Factors used for the Generation of the
34 and 53 EFPY Heatup and Cooldown Curves

Material	¼ T f (n/cm2, E > 1.0 MeV)	¼ T FF[a]	¾ T f (n/cm2, E > 1.0 MeV)	¾ T FF[a]
PBNP Unit 2: EFPY (End of Current License)				
Nozzle Belt Forging (123V352)	**0.23×10^{19}**	**0.60**	**0.11×10^{19}**	**0.44**
Inter. Shell Forging (123V500)	**2.29×10^{19}**	**1.22**	**1.05×10^{19}**	**1.01**
Lower Shell Forging (122W195)	**2.23×10^{19}**	**1.22**	**1.02×10^{19}**	**1.01**
Nozzle Belt to Intermediate Shell Circ. Weld (21935)	**0.23×10^{19}**	**0.60**	**0.11×10^{19}**	**0.44**
Intermediate to Lower Shell Circ. Weld (72442)	**2.12×10^{19}**	**1.20**	**0.97×10^{19}**	**0.99**
PBNP Unit 2: f License Extension)				
Nozzle Belt Forging (123V352)	**0.37×10^{19}**	**0.73**	**0.17×10^{19}**	**0.53**
Inter. Shell Forging (123V500)	**3.65×10^{19}**	**1.34**	**1.67×10^{19}**	**1.14**
Lower Shell Forging (122W195)	**3.60×10^{19}**	**1.33**	**1.65×10^{19}**	**1.14**
Nozzle Belt to Intermediate Shell Circ. Weld (21935)	**0.37×10^{19}**	**0.73**	**0.17×10^{19}**	**0.53**
Intermediate to Lower Shell Circ. Weld (72442)	**3.46×10^{19}**	**1.32**	**1.58×10^{19}**	**1.13**

Notes:

(a) FF = = fluence factor = $f^{(0.28 - 0.1 \log(f))}$

Margin is calculated as, $M = 2\sqrt{\sigma_I^2 + \sigma_\Delta^2}$. The standard deviation for the initial RT_{NDT} margin term, is σ_I 0°F when the initial RT_{NDT} is a measured value, and 17°F when a generic value is available. The standard deviation for the ΔRT_{NDT} margin term, σ_Δ, is 17°F for plates or forgings, and 8.5°F for plates or forgings when surveillance data is used. For welds, σ_Δ is equal to 28°F when surveillance capsule data is not used, and is 14°F (half the value) when credible surveillance capsule data is used. σ_Δ need not exceed 0.5 times the mean value of ΔRT_{NDT}.

Contained in Tables 4 through 11 are the calculations of the 34 and 53 EFPY ART values used for generation of the heatup and cooldown curves.

TABLE 4
Calculation of the Pt. Beach Unit 1 ART Values for the 1/4T Location @ 34 EFPY

Material	RG 1.99 R2 Method	CF (°F)	FF	IRT_{NDT}[a] (°F)	ΔRT_{NDT}[c] (°F)	σ_I (°F)	σ_Δ (°F)	Margin (°F)	ART[b]
Nozzle Belt Forging (122P237)	Position 1.1	77	0.53	50	40.8	0	17	34	125
Inter. Shell Plate (A9811-1)	Position 1.1	88	1.22	1	107.4	26.9	17	63.6	172
	Position 2.1	79.3	1.22	1	96.7	26.9	8.5	56.4	154
Lower Shell Plate (C1423-1)	Position 1.1	55.3	1.20	1	66.4	26.9	17	63.6	131
	Position 2.1	35.8	1.20	1	43.0	26.9	8.5	56.4	100
Nozzle Belt to Intermediate Shell Circ. Weld (8T1762)	Position 1.1	152.4	0.53	-5	80.8	19.7	28	68.5	144
Intermediate Shell Axial Weld - ID 27% (1P0815)	Position 1.1	138.2	1.11	-5	153.4	19.7	28	68.5	217
Intermediate Shell Axial Weld - OD 73% (1P0661)	Position 1.1	157.6	N/A	-5	N/A	19.7	28	68.5	N/A
Intermediate to Lower Shell Circ. Weld (71249)	Position 1.1	167.6	1.20	10	201.1	0	28	56	267
Lower Shell Axial Weld (61782)	Position 1.1	157.4	1.10	-5	173.1	19.7	28	68.5	237
	Position 2.1	163.3	1.10	-5	179.6	19.7	14	48.3	223

Notes:

(a) Initial RT_{NDT} values are generic except the Nozzle Belt Forging and the Intermediate to Lower Shell Circ. Weld. See WCAP-15121, Rev. 1[7].

(b) ART = Initial RT_{NDT} + ΔRT_{NDT} + Margin (°F)

(c) ΔRT_{NDT} = CF • FF

TABLE 5

Calculation of the Pt. Beach Unit 1 ART Values for the 3/4T Location @ 34 EFPY

Material	RG 1.99 R2 Method	CF (°F)	FF	IRT_{NDT}[a] (°F)	ΔRT_{NDT}[c] (°F)	σ_I (°F)	σ_Δ (°F)	Margin (°F)	ART[b]
Nozzle Belt Forging (122P237)	Position 1.1	77	0.37	50	28.5	0	17	34	113
Inter. Shell Plate (A9811-1)	Position 1.1	88	1.01	1	88.9	26.9	17	63.6	154
	Position 2.1	79.3	1.01	1	80.1	26.9	8.5	56.4	138
Lower Shell Plate (C1423-1)	Position 1.1	55.3	0.98	1	54.2	26.9	17	63.6	119
	Position 2.1	35.8	0.98	1	35.1	26.9	8.5	56.4	93
Nozzle Belt to Intermediate Shell Circ. Weld (8T1762)	Position 1.1	152.4	0.37	-5	56.4	19.7	28	68.5	120
Intermediate Shell Axial Weld - ID 27% (1P0815)	Position 1.1	138.2	N/A	-5	N/A	19.7	28	68.5	N/A
Intermediate Shell Axial Weld - OD 73% (1P0661)	Position 1.1	157.6	0.89	-5	140.3	19.7	28	68.5	204
Intermediate to Lower Shell Circ. Weld (71249)	Position 1.1	167.6	0.99	10	165.9	0	28	56	232
Lower Shell Axial Weld (61782)	Position 1.1	157.4	0.88	-5	138.5	19.7	28	68.5	202
	Position 2.1	163.3	0.88	-5	143.7	19.7	14	48.3	187

Notes:

(a) Initial RT_{NDT} values are generic except the Nozzle Belt Forging and the Intermediate to Lower Shell Circ. Weld. See WCAP-15121, Rev. 1[7].

(b) ART = Initial RT_{NDT} + ΔRT_{NDT} + Margin (°F)

(c) ΔRT_{NDT} = CF • FF

TABLE 6

Calculation of the Pt. Beach Unit 1 ART Values for the 1/4T Location @ 53 EFPY

Material	RG 1.99 R2 Method	CF (°F)	FF	IRT_{NDT}[a] (°F)	ΔRT_{NDT}[c] (°F)	σ_I (°F)	σ_Δ (°F)	Margin (°F)	ART[b]
Nozzle Belt Forging (122P237)	Position 1.1	77	0.65	50	50.1	0	17	34	134
Inter. Shell Plate (A9811-1)	Position 1.1	88	1.33	1	117.0	26.9	17	63.6	182
	Position 2.1	79.3	1.33	1	105.5	26.9	8.5	56.4	163
Lower Shell Plate (C1423-1)	Position 1.1	55.3	1.31	1	72.4	26.9	17	63.6	137
	Position 2.1	35.8	1.31	1	46.9	26.9	8.5	56.4	104
Nozzle Belt to Intermediate Shell Circ. Weld (8T1762)	Position 1.1	152.4	0.65	-5	99.1	19.7	28	68.5	163
Intermediate Shell Axial Weld - ID 27% (1P0815)	Position 1.1	138.2	1.23	-5	170.0	19.7	28	68.5	234
Intermediate Shell Axial Weld - OD 73% (1P0661)	Position 1.1	157.6	N/A	-5	N/A	19.7	28	68.5	N/A
Intermediate to Lower Shell Circ. Weld (71249)	Position 1.1	167.6	1.31	10	219.5	0	28	56	286
Lower Shell Axial Weld (61782)	Position 1.1	157.4	1.22	-5	192.0	19.7	28	68.5	256
	Position 2.1	163.3	1.22	-5	199.2	19.7	14	48.3	243

Notes:

(a) Initial RT_{NDT} values are generic except the Nozzle Belt Forging and the Intermediate to Lower Shell Circ. Weld. See WCAP-15121, Rev. 1[7].

(b) ART = Initial RT_{NDT} + ΔRT_{NDT} + Margin (°F)

(c) ΔRT_{NDT} = CF * FF

TABLE 7

Calculation of the Pt. Beach Unit 1 ART Values for the 3/4T Location @ 53 EFPY

Material	RG 1.99 R2 Method	CF (°F)	FF	IRT_{NDT}[a] (°F)	ΔRT_{NDT}[c] (°F)	σ_I (°F)	σ_Δ (°F)	Margin (°F)	ART[b]
Nozzle Belt Forging (122P237)	Position 1.1	77	0.47	50	36.2	0	17	34	120
Inter. Shell Plate (A9811-1)	Position 1.1	88	1.13	1	99.4	26.9	17	63.6	164
	Position 2.1	79.3	1.13	1	89.6	26.9	8.5	56.4	147
Lower Shell Plate (C1423-1)	Position 1.1	55.3	1.11	1	61.4	26.9	17	63.6	126
	Position 2.1	35.8	1.11	1	39.7	26.9	8.5	56.4	97
Nozzle Belt to Intermediate Shell Circ. Weld (8T1762)	Position 1.1	152.4	0.47	-5	71.6	19.7	28	68.5	135
Intermediate Shell Axial Weld - ID 27% (1P0815)	Position 1.1	138.2	N/A	-5	N/A	19.7	28	68.5	N/A
Intermediate Shell Axial Weld - OD 73% (1P0661)	Position 1.1	157.6	1.02	-5	160.8	19.7	28	68.5	224
Intermediate to Lower Shell Circ. Weld (71249)	Position 1.1	167.6	1.12	10	187.7	0	28	56	254
Lower Shell Axial Weld (61782)	Position 1.1	157.4	1.01	-5	159.0	19.7	28	68.5	223
	Position 2.1	163.3	1.01	-5	164.9	19.7	14	48.3	208

Notes:

(a) Initial RT_{NDT} values are generic except the Nozzle Belt Forging and the Intermediate to Lower Shell Circ. Weld. See WCAP-15121, Rev. 1[7].

(b) ART = Initial RT_{NDT} + ΔRT_{NDT} + Margin (°F)

(c) ΔRT_{NDT} = CF * FF

TABLE 8

Calculation of the Pt. Beach Unit 2 ART Values for the 1/4T Location @ 34 EFPY

Material	RG 1.99 R2 Method	CF (°F)	FF	IRT_{NDT}[a] (°F)	ΔRT_{NDT}[c] (°F)	σ_I (°F)	σ_Δ (°F)	Margin (°F)	ART[b]
Nozzle Belt Forging (123V352)	Position 1.1	76	0.60	40	45.6	0	17	34	120
Inter. Shell Forging (123V500)	Position 1.1	58	1.22	40	70.8	0	17	34	145
Lower Shell Forging (122W195)	Position 1.1	31	1.22	40	37.8	0	17	34	112
	Position 2.1	43	1.22	40	52.5	0	8.5	17	110
Nozzle Belt to Intermediate Shell Circ. Weld (21935)	Position 1.1	170	0.60	-56	102	17	28	65.5	112
Intermediate to Lower Shell Circ. Weld (72442)	Position 1.1	180	1.20	-5	216	19.7	28	68.5	280 (220)[d]

Notes:

(a) Initial RT_{NDT} values are measured values except for the welds. See WCAP-15121, Rev. 1[7].

(b) ART = Initial RT_{NDT} + ΔRT_{NDT} + Margin (°F)

(c) ΔRT_{NDT} = CF * FF

(d) Value in parenthesis was calculated using Master-Curve Technology. See Appendix A.

TABLE 9

Calculation of the Pt. Beach Unit 2 ART Values for the 3/4T Location @ 34 EFPY

Material	RG 1.99 R2 Method	CF (°F)	FF	IRT_{NDT}[a] (°F)	ΔRT_{NDT}[c] (°F)	σ_I (°F)	σ_Δ (°F)	Margin (°F)	ART[b]
Nozzle Belt Forging (123V352)	Position 1.1	76	0.44	40	33.4	0	17	34	107
Inter. Shell Forging (123V500)	Position 1.1	58	1.01	40	58.6	0	17	34	133
Lower Shell Forging (122W195)	Position 1.1	31	1.01	40	31.3	0	17	34	105
	Position 2.1	43	1.01	40	43.4	0	8.5	17	100
Nozzle Belt to Intermediate Shell Circ. Weld (21935)	Position 1.1	170	0.44	-56	74.8	17	28	65.5	84
Intermediate to Lower Shell Circ. Weld (72442)	Position 1.1	180	0.99	-5	178.2	19.7	28	68.5	242 (185)[d]

Notes:

(a) Initial RT_{NDT} values are measured values except for the welds. See WCAP-15121, Rev. 1[7].

(b) ART = Initial RT_{NDT} + ΔRT_{NDT} + Margin (°F)

(c) ΔRT_{NDT} = CF * FF

(d) Value in parenthesis was calculated using Master-Curve Technology. See Appendix A.

TABLE 10

Calculation of the Pt. Beach Unit 2 ART Values for the 1/4T Location @ 53 EFPY

Material	RG 1.99 R2 Method	CF (°F)	FF	IRT_{NDT}[a] (°F)	ΔRT_{NDT}[c] (°F)	σ_I (°F)	σ_Δ (°F)	Margin (°F)	ART[b]
Nozzle Belt Forging (123V352)	Position 1.1	76	0.73	40	55.5	0	17	34	130
Inter. Shell Forging (123V500)	Position 1.1	58	1.34	40	77.7	0	17	34	152
Lower Shell Forging (122W195)	Position 1.1	31	1.33	40	41.2	0	17	34	115
	Position 2.1	43	1.33	40	57.2	0	8.5	17	114
Nozzle Belt to Intermediate Shell Circ. Weld (21935)	Position 1.1	170	0.73	-56	124.1	17	28	65.5	134
Intermediate to Lower Shell Circ. Weld (72442)	Position 1.1	180	1.32	-5	237.6	19.7	28	68.5	301 (239)[d]

Notes:

(a) Initial RT_{NDT} values are measured values except for the welds. See WCAP-15121, Rev. 1[7].

(b) ART = Initial RT_{NDT} + ΔRT_{NDT} + Margin (°F)

(c) ΔRT_{NDT} = CF * FF

(d) Value in parenthesis was calculated using Master-Curve Technology. See Appendix A.

TABLE 11
Calculation of the Pt. Beach Unit 2 ART Values for the 3/4T Location @ 53 EFPY

Material	RG 1.99 R2 Method	CF (°F)	FF	IRT_{NDT}[a] (°F)	ΔRT_{NDT}[c] (°F)	σ_I (°F)	σ_Δ (°F)	Margin (°F)	ART[b]
Nozzle Belt Forging (123V352)	Position 1.1	76	0.53	40	40.3	0	17	34	114
Inter. Shell Forging (123V500)	Position 1.1	58	1.14	40	66.1	0	17	34	140
Lower Shell Forging (122W195)	Position 1.1	31	1.14	40	35.3	0	17	34	109
	Position 2.1	43	1.14	40	49.0	0	8.5	17	106
Nozzle Belt to Intermediate Shell Circ. Weld (21935)	Position 1.1	170	0.53	-56	90.1	17	28	65.5	100
Intermediate to Lower Shell Circ. Weld (72442)	Position 1.1	180	1.13	-5	203.4	19.7	28	68.5	267 (207)[d]

Notes:

(a) Initial RT_{NDT} values are measured values except for the welds. See WCAP-15121, Rev. 1[7].

(b) ART = Initial RT_{NDT} + ΔRT_{NDT} + Margin (°F)

(c) ΔRT_{NDT} = CF * FF

(d) Value in parenthesis was calculated using Master-Curve Technology. See Appendix A.

Contained in Table 12 is a summary of the limiting ARTs to be used in the generation of the Pt. Beach Units 1 and 2 PT limit curves. The limiting curves, which bound both units, will be presented in Section 5. When considering the master-curve ART for the Unit 2 intermediate to lower shell girth weld, the highest ART would then come from the Pt. Beach Unit 1 intermediate to lower shell circumferential weld. Thus, the "Circ-Flaw" methodology from Code Case N-641 (Also known as CC N-588) will be used in conjunction with the Pt. Beach Unit 1 "Circ-Flaw" ART for generating PT curves. However, the highest "Axial-Flaw" material must also be run to check for limitations in the PT curves. The most limiting "Axial-Flaw" ART comes from the Pt. Beach Unit 1 lower shell axial welds (for 1/4T) and the intermediate shell axial welds (for 3/4T).

TABLE 12
Summary of the Limiting ART Values Used in the
Generation of the Pt. Beach Unit 1 and 2 Heatup/Cooldown Curves

EFPY	Limiting "Circ-Flaw" ART [a]		Limiting "Axial-Flaw" ART (°F)	
	¼T(°F)	¾T (°F)	¼T(°F)	¾T (°F)
Pt. Beach Unit 1[b]				
34	267	232	223	204
53	286	254	243	224
Pt. Beach Unit 2[c]				
34	280 (*220*) [d]	242 (*185*) [d]	145	133
53	301 (*239*) [d]	267 (*207*) [d]	152	140

Notes:

(a) Pt. Beach Units 1 and 2 Limiting Circ. Flaw ART comes from the Intermediate to lower shell circumferential welds (Heat #'s 71249 and 72442, respectively).

(b) The "Axial-Flaw" ARTs for Pt. Beach Unit 1 are from the lower shell axial welds (1/4T) and the intermediate shell axial welds (3/4T).

(c) The "Axial-Flaw" ARTs for Pt. Beach Unit 2 are from the intermediate shell forging 123V500.

(d) Value in parenthesis was calculated using Master-Curve Technology. See Appendix A.

5 HEATUP AND COOLDOWN PRESSURE-TEMPERATURE LIMIT CURVES

Pressure-temperature limit curves for normal heatup and cooldown of the primary reactor coolant system have been calculated for the pressure and temperature in the reactor vessel beltline region using the methods discussed in Sections 3.0 and 4.0 of this report. This approved methodology is also presented in WCAP-14040-NP-A, Revision 2 with exception to those items discussed in Section 1 of this report. Master-Curve technology is also presented within this report, however its use does not alter the results, as discussed hereafter.

Figures 1 and 3 present the limiting heatup curves without margins for possible instrumentation errors using heatup rates of 60 and 100°F/hr applicable for the first 34 and 53 EFPY, respectively. These curves were generated using a combination of the1996 ASME Code Section XI, Appendix G with the limiting ART values from the Unit 1 intermediate and lower shell longitudinal welds and the ASME Code Case N-641. These heatup curves bound those generated using the "Circ-flaw" methodology portion of ASME Code Case N-641 with the limiting circ-weld ART value from the Unit 1 intermediate to lower shell girth weld (See data points in Appendix B). Additionally, the limiting heatup curves presented in this section would also be more limiting than curves generated with limiting circ-weld ART value from the Unit 2 intermediate to lower shell girth weld; assuming the Master-Curve technology was <u>not</u> implemented (Again, see Appendix B for comparison).

Figures 2 and 4 present the limiting cooldown curves without margins for possible instrumentation errors using cooldown rates of 0, 20, 40, 60 and 100°F/hr applicable for 34 and 53 EFPY, respectively. Again, these curves were generated using a combination of the1996 ASME Code Section XI, Appendix G with the limiting ART values from the Unit 1 intermediate and lower shell longitudinal welds and the ASME Code Case N-641. These cooldown curves bound those generated using the "Circ-flaw" methodology portion of ASME Code Case N-641 with the limiting circ-weld ART value from the Unit 1 intermediate to lower shell girth weld (See Appendix B). Additionally, the limiting cooldown curves presented in this section would also be more limiting than curves generated with limiting circ-weld ART value from the Unit 2 intermediate to lower shell girth weld; assuming the Master-Curve technology was <u>not</u> implemented (See Appendix B).

Allowable combinations of temperature and pressure for specific temperature change rates are below and to the right of the limit line shown in Figures 1 through 4. This is in addition to other criteria, which must be met before the reactor is made critical, as discussed below in the following paragraphs.

The reactor must not be made critical until pressure-temperature combinations are to the right of the criticality limit line shown in Figures 1 and 3. The straight-line portion of the criticality limit is at the minimum permissible temperature for the 2485 psig inservice hydrostatic test as required by Appendix G to 10 CFR Part 50. The governing equation for the hydrostatic test is defined in Code Case N-641 as follows:

$$1.5\ K_{Im} < K_{Ic}$$

where,

K_{Im} is the stress intensity factor covered by membrane (pressure) stress,

$K_{Ic} = 33.2 + 20.734\ e^{[0.02\ (T - RT_{NDT})]}$,

T is the minimum permissible metal temperature, and

RT_{NDT} is the metal reference nil-ductility temperature.

The criticality limit curve specifies pressure-temperature limits for core operation to provide additional margin during actual power production as specified in Reference 5. The pressure-temperature limits for core operation (except for low power physics tests) are that the reactor vessel must be at a temperature equal to or higher than the minimum temperature required for the inservice hydrostatic test, and at least 40°F higher than the minimum permissible temperature in the corresponding pressure-temperature curve for heatup and cooldown calculated as described in Section 4.0 of this report. For the heatup and cooldown curves without margins for instrumentation errors, the minimum temperatures for the in service hydrostatic leak tests for the Point Beach Unit 1 and 2 reactor vessels at 34 and 53 EFPY are 273°F and 293°F, respectively. The vertical line drawn from these points on the pressure-temperature curve, intersecting a curve 40°F higher than the pressure-temperature limit curve constitutes the limit for core operation for the reactor vessel.

Figures 1 through 4 define all of the above limits for ensuring prevention of nonductile failure for the Point Beach Unit 1 and 2 reactor vessels at 34 and 53 EFPY. The data points used for the heatup and cooldown pressure-temperature limit curves shown in Figures 1 through 4 are presented in Tables 13 through 16.

MATERIAL PROPERTY BASIS

LIMITING ART VALUES AT 34 EFPY: 1/4T, 223°F (LOWER SHELL LONG. WELDS)
3/4T, 204°F (INTER. SHELL LONG. WELDS)

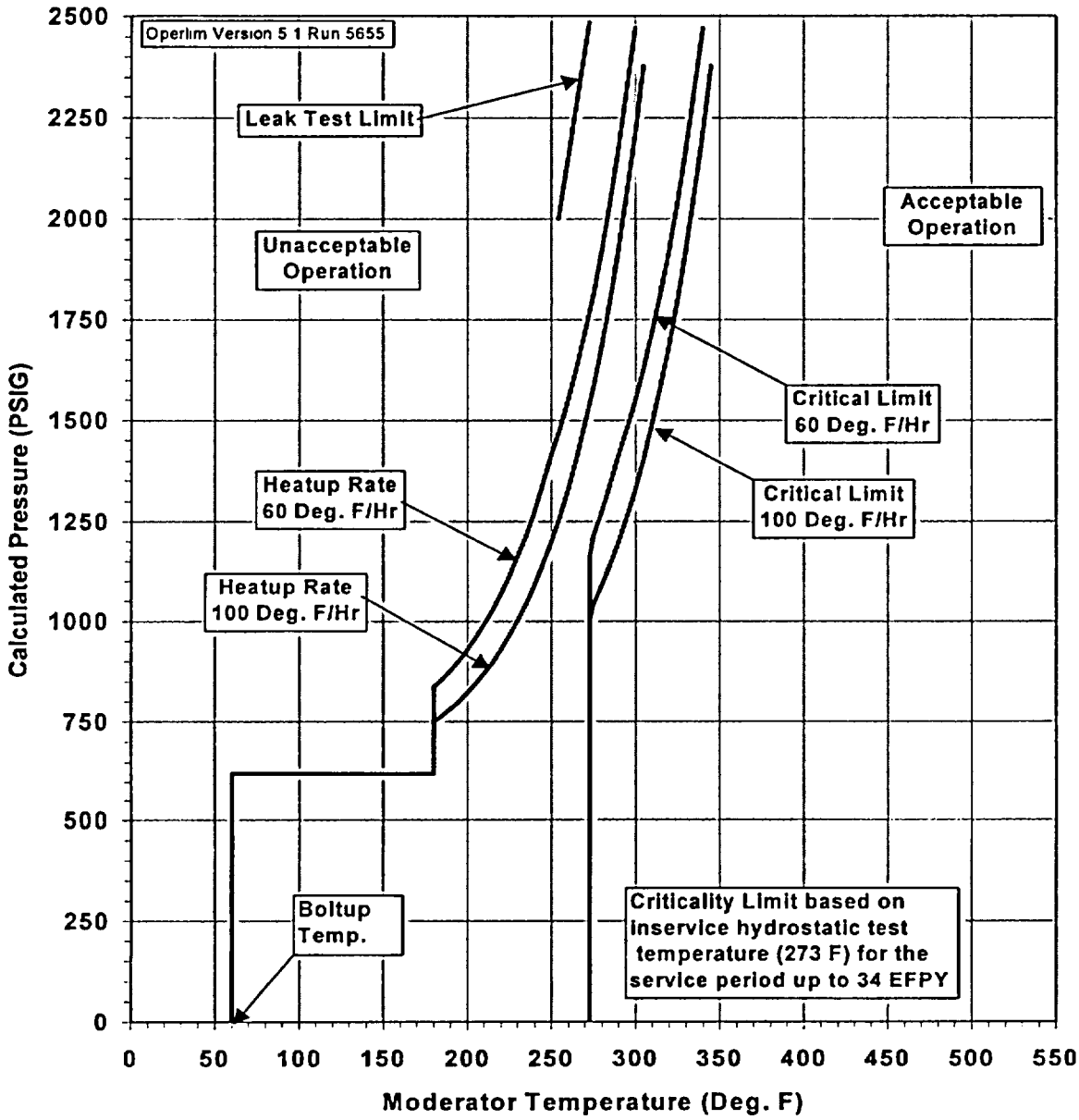

Figure 1 **Point Beach Units 1 and 2 Reactor Coolant System Heatup Limitations (Heatup Rates of 60 & 100°F/hr) Applicable for the First 34 EFPY (Without Margins for Instrumentation Errors) Using 1996 App.G Methodology & ASME Code Case N-641**

MATERIAL PROPERTY BASIS

LIMITING ART VALUES AT 34 EFPY: 1/4T, 223°F (LOWER SHELL LONG. WELDS)
3/4T, 204°F (INTER. SHELL LONG. WELDS)

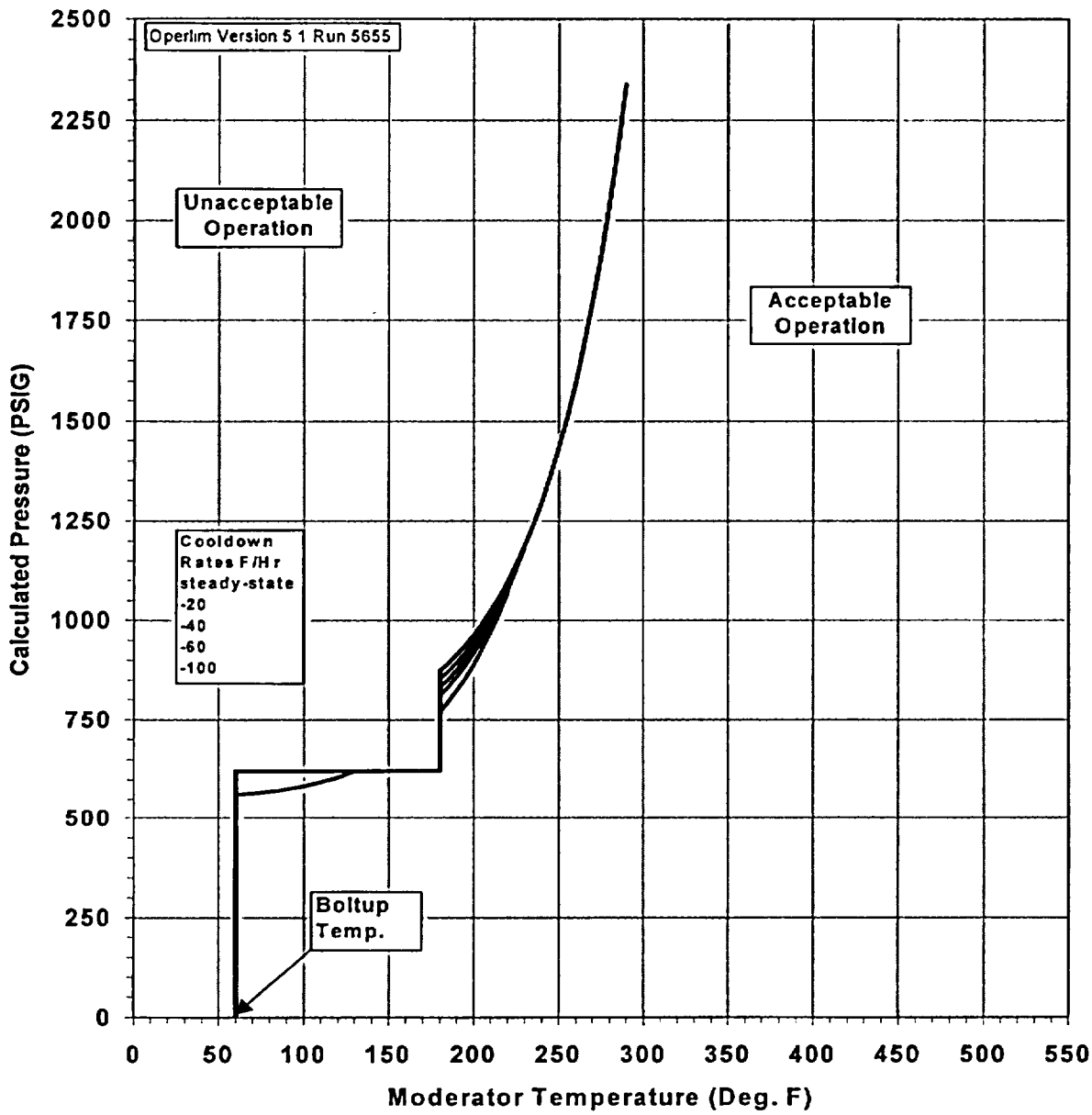

Figure 2 **Point Beach Units 1 and 2 Reactor Coolant System Cooldown Limitations (Cooldown Rates up to 100°F/hr) Applicable for the First 34 EFPY (Without Margins for Instrumentation Errors) Using 1996 App.G Methodology & ASME Code Case N-641**

TABLE 13
34 EFPY Heatup Curve Data Points Using 1996 App. G & ASME Code Case N-641
(without Uncertainties for Instrumentation Errors)

60°F/hr.		Criticality Limit		100°F/hr.		Criticality Limit		Leak Test Limit	
Temp. (°F)	Press. (psig)	Temp. (°F)	Press. (psig)	Temp. (°F)	Press. (psig)	Temp. (°F)	Press. (psig)	Temp. (°F)	Press. (psig)
60	0	273	0	60	0	273	0	254	2000
60	621	273	621	60	621	273	621	273	2485
65	621	273	621	65	621	273	621		
70	621	273	621	70	621	273	621		
75	621	273	621	75	621	273	621		
80	621	273	621	80	621	273	621		
85	621	273	621	85	621	273	621		
90	621	273	621	90	621	273	621		
95	621	273	621	95	621	273	621		
100	621	273	621	100	621	273	621		
105	621	273	621	105	621	273	621		
110	621	273	621	110	621	273	621		
115	621	273	621	115	621	273	621		
120	621	273	621	120	621	273	621		
125	621	273	621	125	621	273	621		
130	621	273	621	130	621	273	621		
135	621	273	621	135	621	273	621		
140	621	273	621	140	621	273	621		
145	621	273	621	145	621	273	621		
150	621	273	621	150	621	273	621		
155	621	273	621	155	621	273	621		
160	621	273	621	160	621	273	621		
165	621	273	621	165	621	273	621		
170	621	273	621	170	621	273	621		
175	621	273	836	175	621	273	750		
180	621	273	856	180	621	273	765		
180	836	273	878	180	750	273	782		
185	856	273	902	185	765	273	801		
190	878	273	929	190	782	273	821		
195	902	273	959	195	801	273	845		
200	929	273	992	200	821	273	870		
205	959	273	1028	205	845	273	898		
210	992	273	1068	210	870	273	929		
215	1028	273	1112	215	898	273	964		
220	1068	273	1161	220	929	273	1002		
225	1112	275	1215	225	964	275	1044		
230	1161	280	1274	230	1002	280	1090		
235	1215	285	1340	235	1044	285	1141		
240	1274	290	1411	240	1090	290	1198		
245	1340	295	1477	245	1141	295	1260		
250	1411	300	1549	250	1198	300	1329		
255	1477	305	1628	255	1260	305	1405		

TABLE 13 - (Continued)
34 EFPY Heatup Curve Data Points Using 1996 App. G & ASME Code Case N-641
(without Uncertainties for Instrumentation Errors)

60°F/hr.		Criticality Limit		100°F/hr.		Criticality Limit		Leak Test Limit	
Temp.	Press.	Temp.	Press.	Temp.	Press.	Temp.	Press.	Temp.	Press.
(°F)	(psig)	(°F)	(psig)	(°F)	(psig)	(°F)	(psig)	(°F)	(psig)
260	1549	310	1716	260	1329	310	1489		
265	1628	315	1813	265	1405	315	1582		
270	1716	320	1920	270	1489	320	1684		
275	1813	325	2038	275	1582	325	1797		
280	1920	330	2168	280	1684	330	1921		
285	2038	335	2312	285	1797	335	2059		
290	2168	340	2471	290	1921	340	2210		
295	2312			295	2059	345	2377		
300	2471			300	2210				
				305	2377				

TABLE 14
34 EFPY Cooldown Curve Data Points Using 1996 App. G & ASME Code Case N-641
(without Uncertainties for Instrumentation Errors)

Steady State		20°F/hr.		40°F/hr.		60°F/hr.		100°F/hr.	
T (°F)	P (psig)	T (°F)	P (psig)	T (°F)	P (psig)	T (°F)	P (psig)	T (°F)	P (psig)
60	0	60	0	60	0	60	0	60	0
60	621	60	621	60	621	60	621	60	563
65	621	65	621	65	621	65	621	65	564
70	621	70	621	70	621	70	621	70	566
75	621	75	621	75	621	75	621	75	568
80	621	80	621	80	621	80	621	80	571
85	621	85	621	85	621	85	621	85	574
90	621	90	621	90	621	90	621	90	577
95	621	95	621	95	621	95	621	95	580
100	621	100	621	100	621	100	621	100	584
105	621	105	621	105	621	105	621	105	589
110	621	110	621	110	621	110	621	110	594
115	621	115	621	115	621	115	621	115	599
120	621	120	621	120	621	120	621	120	606
125	621	125	621	125	621	125	621	125	613
130	621	130	621	130	621	130	621	130	621
135	621	135	621	135	621	135	621	135	621
140	621	140	621	140	621	140	621	140	621
145	621	145	621	145	621	145	621	145	621
150	621	150	621	150	621	150	621	150	621
155	621	155	621	155	621	155	621	155	621
160	621	160	621	160	621	160	621	160	621
165	621	165	621	165	621	165	621	165	621
170	621	170	621	170	621	170	621	170	621
175	621	175	621	175	621	175	621	175	621
180	621	180	621	180	621	180	621	180	621
180	873	180	852	180	831	180	810	180	770
185	892	185	872	185	852	185	833	185	795
190	914	190	895	190	876	190	858	190	824
195	937	195	919	195	902	195	886	195	855
200	963	200	947	200	931	200	916	200	889
205	992	205	977	205	963	205	950	205	928
210	1023	210	1011	210	999	210	988	210	970
215	1058	215	1048	215	1038	215	1030	215	1017
220	1097	220	1089	220	1082	220	1076	220	1070
225	1140	225	1134	225	1130	225	1127		
230	1187	230	1184	230	1183				
235	1239								
240	1297								
245	1361								
250	1431								
255	1509								
260	1595								

TABLE 14 – (Continued)
34 EFPY Cooldown Curve Data Points Using 1996 App. G & ASME Code Case N-641
(without Uncertainties for Instrumentation Errors)

Steady State		20°F/hr.		40°F/hr.		60°F/hr.		100°F/hr.	
T (°F)	P (psig)	T (°F)	P (psig)	T (°F)	P (psig)	T (°F)	P (psig)	T (°F)	P (psig)
265	1690								
270	1795								
275	1911								
280	2040								
285	2182								
290	2338								

MATERIAL PROPERTY BASIS

LIMITING ART VALUES AT 53 EFPY: 1/4T,243°F (LOWER SHELL LONG. WELDS)
3/4T,224°F (INTER. SHELL LONG. WELDS)

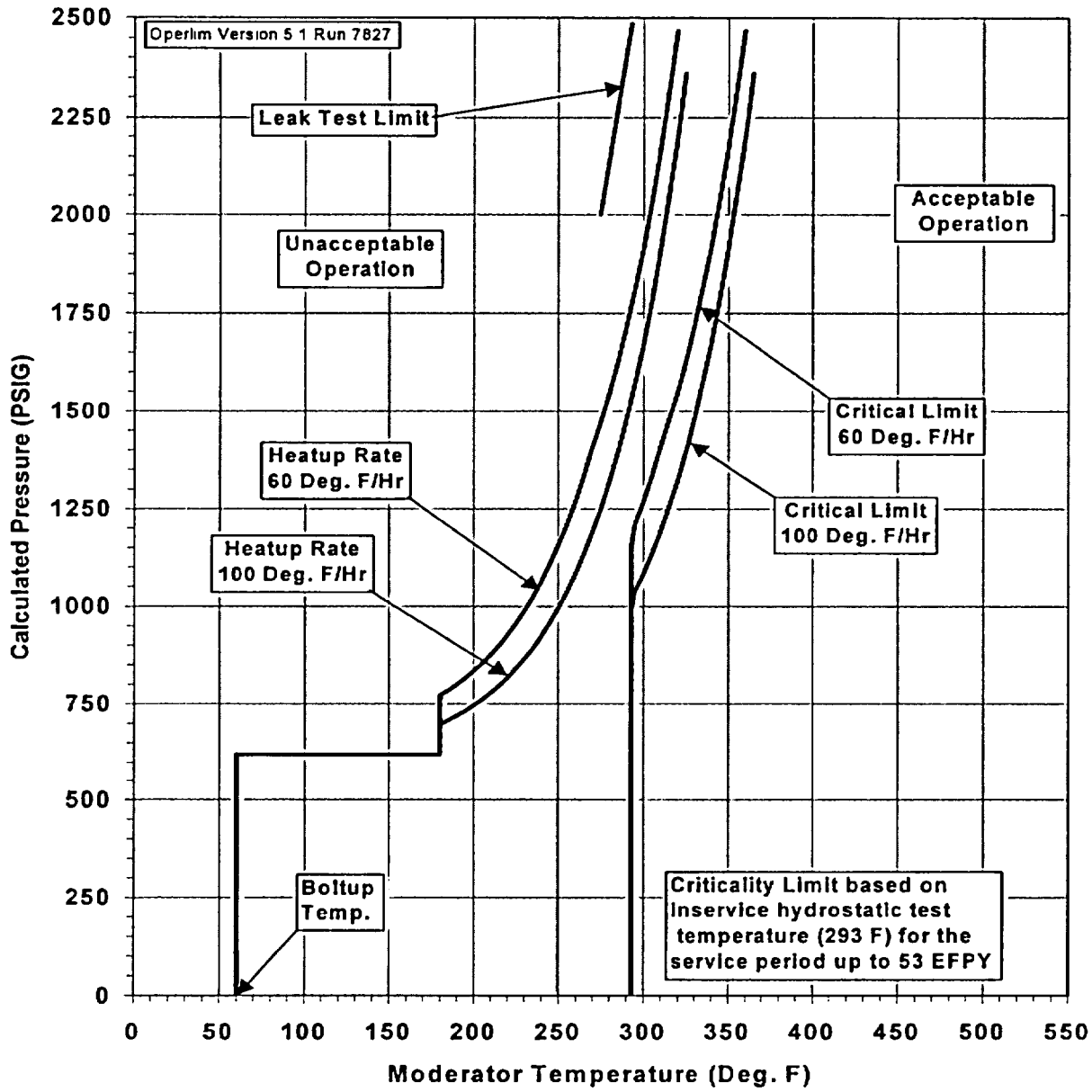

Figure 3 **Point Beach Units 1 and 2 Reactor Coolant System Heatup Limitations (Heatup Rates of 60 & 100°F/hr) Applicable for the First 53 EFPY (Without Margins for Instrumentation Errors) Using 1996 App.G Methodology & ASME Code Case N-641**

MATERIAL PROPERTY BASIS

LIMITING ART VALUES AT 53 EFPY: 1/4T,243°F (LOWER SHELL LONG. WELDS)
3/4T,224°F (INTER. SHELL LONG. WELDS)

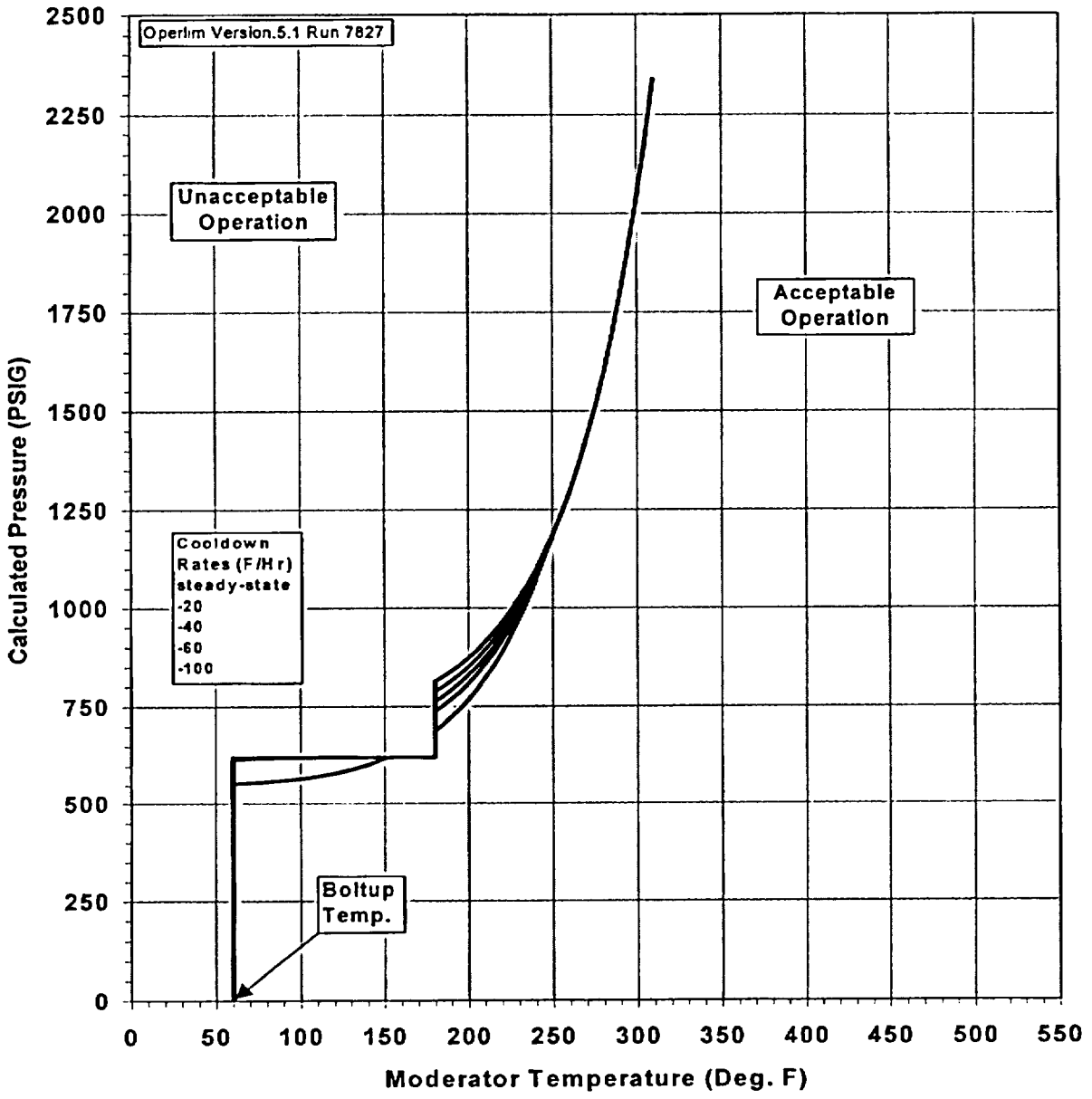

Figure 4 **Point Beach Units 1 and 2 Reactor Coolant System Cooldown Limitations (Cooldown Rates up to 100°F/hr) Applicable for the First 53 EFPY (Without Margins for Instrumentation Errors) Using 1996 App.G Methodology & ASME Code Case N-641**

TABLE 15
53 EFPY Heatup Curve Data Points Using 1996 App. G & ASME Code Case N-641
(without Uncertainties for Instrumentation Errors)

60°F/hr.		Criticality Limit		100°F/hr.		Criticality Limit		Leak Test Limit	
Temp. (°F)	Press. (psig)	Temp. (°F)	Press. (psig)	Temp. (°F)	Press. (psig)	Temp. (°F)	Press. (psig)	Temp. (°F)	Press. (psig)
60	0	293	0	60	0	293	0	274	2000
60	621	293	621	60	621	293	621	293	2485
65	621	293	621	65	621	293	621		
70	621	293	621	70	621	293	621		
75	621	293	621	75	621	293	621		
80	621	293	621	80	621	293	621		
85	621	293	621	85	621	293	621		
90	621	293	621	90	621	293	621		
95	621	293	621	95	621	293	621		
100	621	293	621	100	621	293	621		
105	621	293	621	105	621	293	621		
110	621	293	621	110	621	293	621		
115	621	293	621	115	621	293	621		
120	621	293	621	120	621	293	621		
125	621	293	621	125	621	293	621		
130	621	293	621	130	621	293	621		
135	621	293	621	135	621	293	621		
140	621	293	621	140	621	293	621		
145	621	293	621	145	621	293	621		
150	621	293	621	150	621	293	621		
155	621	293	621	155	621	293	621		
160	621	293	621	160	621	293	621		
165	621	293	621	165	621	293	621		
170	621	293	621	170	621	293	621		
175	621	293	772	175	621	293	698		
180	621	293	785	180	621	293	708		
180	772	293	800	180	698	293	720		
185	785	293	816	185	708	293	732		
190	800	293	834	190	720	293	746		
195	816	293	854	195	732	293	761		
200	834	293	876	200	746	293	778		
205	854	293	900	205	761	293	797		
210	876	293	926	210	778	293	817		
215	900	293	956	215	797	293	840		
220	926	293	989	220	817	293	866		
225	956	293	1025	225	840	293	893		
230	989	293	1065	230	866	293	924		
235	1025	293	1109	235	893	293	959		
240	1065	293	1157	240	924	293	996		
245	1109	295	1211	245	959	295	1038		
250	1157	300	1270	250	996	300	1084		
255	1211	305	1336	255	1038	305	1135		

TABLE 15 - (Continued)
53 EFPY Heatup Curve Data Points Using 1996 App. G & ASME Code Case N-641
(without Uncertainties for Instrumentation Errors)

60°F/hr.		Criticality Limit		100°F/hr.		Criticality Limit		Leak Test Limit	
Temp.	Press.	Temp.	Press.	Temp.	Press.	Temp.	Press.	Temp.	Press.
(°F)	(psig)	(°F)	(psig)	(°F)	(psig)	(°F)	(psig)	(°F)	(psig)
260	1270	310	1408	260	1084	310	1191		
265	1336	315	1477	265	1135	315	1253		
270	1408	320	1548	270	1191	320	1321		
275	1477	325	1628	275	1253	325	1397		
280	1548	330	1715	280	1321	330	1480		
285	1628	335	1812	285	1397	335	1572		
290	1715	340	1919	290	1480	340	1673		
295	1812	345	2037	295	1572	345	1785		
300	1919	350	2167	300	1673	350	1909		
305	2037	355	2310	305	1785	355	2045		
310	2167	360	2469	310	1909	360	2195		
315	2310			315	2045	365	2361		
320	2469			320	2195				
				325	2361				

TABLE 16
53 EFPY Cooldown Curve Data Points Using 1996 App. G & ASME Code Case N-641
(without Uncertainties for Instrumentation Errors)

Steady State		20°F/hr.		40°F/hr.		60°F/hr.		100°F/hr.	
T (°F)	P (psig)	T (°F)	P (psig)	T (°F)	P (psig)	T (°F)	P (psig)	T (°F)	P (psig)
60	0	60	0	60	0	60	0	60	0
60	621	60	621	60	621	60	615	60	555
65	621	65	621	65	621	65	616	65	556
70	621	70	621	70	621	70	617	70	557
75	621	75	621	75	621	75	619	75	559
80	621	80	621	80	621	80	620	80	560
85	621	85	621	85	621	85	621	85	562
90	621	90	621	90	621	90	621	90	564
95	621	95	621	95	621	95	621	95	566
100	621	100	621	100	621	100	621	100	568
105	621	105	621	105	621	105	621	105	571
110	621	110	621	110	621	110	621	110	574
115	621	115	621	115	621	115	621	115	578
120	621	120	621	120	621	120	621	120	582
125	621	125	621	125	621	125	621	125	586
130	621	130	621	130	621	130	621	130	591
135	621	135	621	135	621	135	621	135	597
140	621	140	621	140	621	140	621	140	603
145	621	145	621	145	621	145	621	145	610
150	621	150	621	150	621	150	621	150	618
155	621	155	621	155	621	155	621	155	621
160	621	160	621	160	621	160	621	160	621
165	621	165	621	165	621	165	621	165	621
170	621	170	621	170	621	170	621	170	621
175	621	175	621	175	621	175	621	175	621
180	621	180	621	180	621	180	621	180	621
180	813	180	788	180	763	180	738	180	689
185	826	185	802	185	778	185	753	185	706
190	840	190	817	190	793	190	770	190	724
195	856	195	833	195	811	195	789	195	745
200	873	200	852	200	830	200	809	200	768
205	892	205	872	205	852	205	832	205	794
210	914	210	894	210	875	210	857	210	822
215	937	215	919	215	902	215	885	215	853
220	963	220	946	220	931	220	915	220	888
225	992	225	977	225	963	225	950	225	927
230	1023	230	1010	230	998	230	987	230	969
235	1058	235	1047	235	1038	235	1029	235	1017
240	1097	240	1088	240	1081	240	1075	240	1069
245	1140	245	1134	245	1129	245	1127		
250	1187	250	1184	250	1183				

TABLE 16 – (Continued)
53 EFPY Cooldown Curve Data Points Using 1996 App. G & ASME Code Case N-641
(without Uncertainties for Instrumentation Errors)

Steady State		20°F/hr.		40°F/hr.		60°F/hr.		100°F/hr.	
T (°F)	P (psig)	T (°F)	P (psig)	T (°F)	P (psig)	T (°F)	P (psig)	T (°F)	P (psig)
255	1239								
260	1297								
265	1361								
270	1431								
275	1509								
280	1595								
285	1690								
290	1795								
295	1911								
300	2040								
305	2182								
310	2338								

6 REFERENCES

1. Regulatory Guide 1.99, Revision 2, "Radiation Embrittlement of Reactor Vessel Materials," U.S. Nuclear Regulatory Commission, May 1988.

2. WCAP-14040-NP-A, Revision 2, "Methodology used to Develop Cold Overpressure Mitigating system Setpoints and RCS Heatup and Cooldown Limit Curves", J.D. Andrachek, et. al., January 1996.

3. ASME Code Case N-641, "Alternative Pressure-Temperature Relationship and Low Temperature Overpressure Protection System Requirements Section XI, Division 1", January 17, 2000.
[*Sub Reference 1: ASME Code Case N-640, "Alternative Reference Fracture Toughness for Development of P-T Limit Curves for Section XI, Division 1", February 26, 1999.*]
[*Sub Reference 2: ASME Boiler and Pressure Vessel Code, Case N-588, "Attenuation to Reference Flaw Orientation of Appendix G for Circumferential Welds in Reactor Vessels", Section XI, Division 1, Approved December 12, 1997.*]

4. Section XI of the ASME Boiler and Pressure Vessel Code, Appendix G, "Fracture Toughness Criteria for Protection Against Failure." Dated December 1995, through 1996 Addendum.

5. Code of Federal Regulations, 10 CFR Part 50, Appendix G, "Fracture Toughness Requirements," U.S. Nuclear Regulatory Commission, Washington, D.C., Federal Register, Volume 60, No. 243, dated December 19, 1995.

6. "Fracture Toughness Requirements", Branch Technical Position MTEB 5-2, Chapter 5.3.2 in Standard Review Plan for the Review of Safety Analysis Reports for Nuclear Power Plants, LWR Edition, NUREG-0800, 1981.

7. WCAP-15121, Revision 1, "Point Beach Units 1 and 2 WOG Reactor Vessel 60-Year Evaluation Minigroup Heatup and Cooldown Limit Curves for Normal Operation," J.H. Ledger, April 2001.

8. Letter NPL 2002-0300, Design Input letter from Brian Kemp of MNC, Dated December 16, 2002.

9. 1989 Section III, Division 1 of the ASME Boiler and Pressure Vessel Code, Paragraph NB-2331, "Material for Vessels."

10. Regulatory Guide 1.190, "Calculational and Dosimetry Methods for Determining Pressure Vessel Neutron Fluence," March 2001.

APPENDIX A

MASTER CURVE EVALUATION ON PT. BEACH UNIT 2 GIRTH WELD

EVALUATION

Master Curve fracture toughness testing has been performed on the Point Beach Nuclear Plant Unit 2 (PBNP-2) girth weld metal [A-1]. The results from this testing on weld wire heat 72442 are being incorporated into the determination of heatup and cooldown pressure-temperature (P-T) curves for the PBNP-2 reactor pressure vessel (RPV). The approach taken using Master Curve data utilizes the projected values of RT_{To} at end-of-life (EOL) and EOL extension (EOLE) maximum fluence levels for the girth weld to determine the value of adjusted reference temperature (ART). ART is the regulatory index value for use of the ASME Code reference fracture toughness curves. The methodology used for determining ART follows the approach that was the basis for the Kewaunee safety evaluation (SE) for the limiting girth weld in the Kewaunee RPV [A-2].

The calculation of heat-up and cool-down curves requires ART values at the ¼-thickness (¼-T) and ¾-thickness (¾-T) through wall locations corresponding to the peak fluence for the girth (circumferential) weld. The attenuation of fluence (□t) through the wall of the RPV was determined using the method in Regulatory Guide 1.99, Rev. 2 and the optional method in ASTM E 900-02 [A-3], which relies on an exponential decrease through the RPV wall:

$$(\phi t)_x = (\phi t)_o \exp(-0.24\, x) \quad \text{(A1)}$$

where x is the distance into the vessel wall from the inside surface at the clad-base metal interface in units of inches. This attenuation formula for fluence is based upon dpa rather than neutron fluence with E > 1 MeV. Equation A1 is applied for determining the fluences at ¼-thickness and ¾-thickness in the 6.5-in PBNP-2 RPV [A-4]. The ART values are then calculated using the Method 2 approach presented in Reference A-1, which follows the NRC evaluation method for the Kewuanee RPV [A-2]. Tables A-1 and A-2 list the results of these calculations for the ¼-thickness location at EOL and EOLE, and Tables A-3 and A-4 list the ¾-thickness location results for EOL and EOLE. The three lines in each of the tables are the projected calculations corresponding to the measured values of RT_{To} from the specific capsules. Chemistry, temperature, and fluence differences between the capsule results are adjusted to reflect the RPV weld. The average of the three calculations at the end of each table is the ART value used for the P-T curve determination representing the girth weld metal in the PBNP-2 RPV.

Table A-1

NRC Method [A-2] for Determining ART at ¼-T for EOL Fluence

Material & Capsule	Chemistry and Temperature Adjusted ΔRT_{To} (°F)	Fluence Function Ratio*	Total Adjusted ΔRT_{To} (°F)	Adjusted RT_{irr} (°F)	Margin** (°F)	ART (°F)
SA-1484/A3	210.7	1.134	238.9	199.9	60.5	260.4
WF-67/L1	149.8	1.132	169.7	133.7	60.5	194.2
WF-67/LG2	170.3	1.057	179.9	143.9	60.5	204.4
					Average	**220**

* Ratio of the fluence functions between the RPV at EOL and the surveillance capsule.

** The margin established by NRC in the Kewaunee SE (Margin = $2\,[(14)^2 + (28)^2]^{1/2} - 2$)

Table A-2

NRC Method [A-2] for Determining ART at ¼-T for EOLE Fluence

Material & Capsule	Chemistry and Temperature Adjusted ΔRT_{To} (°F)	Fluence Function Ratio*	Total Adjusted ΔRT_{To} (°F)	Adjusted RT_{irr} (°F)	Margin** (°F)	ART (°F)
SA-1484/A3	210.7	1.245	262.4	223.4	60.5	283.9
WF-67/L1	149.8	1.244	186.4	150.4	60.5	210.9
WF-67/LG2	170.3	1.161	197.7	161.7	60.5	222.2
					Average	**239**

* Ratio of the fluence functions between the RPV at EOLE and the surveillance capsule.

** The margin established by NRC in the Kewaunee SE (Margin = $2\,[(14)^2 + (28)^2]^{1/2} - 2$)

Table A-3

NRC Method [A-2] for Determining ART at ¾-T for EOL Fluence

Material & Capsule	Chemistry and Temperature Adjusted ΔRT_{To} (°F)	Fluence Function Ratio*	Total Adjusted ΔRT_{To} (°F)	Adjusted RT_{irr} (°F)	Margin** (°F)	ART (°F)
SA-1484/A3	210.7	0.934	196.8	157.8	60.5	218.3
WF-67/L1	149.8	0.933	139.8	103.8	60.5	164.3
WF-67/LG2	170.3	0.870	148.2	112.2	60.5	172.7
					Average	**185**

* Ratio of the fluence functions between the RPV at EOL and the surveillance capsule.

** The margin established by NRC in the Kewaunee SE (Margin = $2\,[(14)^2 + (28)^2]^{1/2} - 2$)

Table A-4

NRC Method [A-2] for Determining ART at ¾-T for EOLE Fluence

Material & Capsule	Chemistry and Temperature Adjusted ΔRT_{To} (°F)	Fluence Function Ratio*	Total Adjusted ΔRT_{To} (°F)	Adjusted RT_{irr} (°F)	Margin** (°F)	ART (°F)
SA-1484/A3	210.7	1.060	223.4	184.4	60.5	244.9
WF-67/L1	149.8	1.059	158.7	122.7	60.5	183.2
WF-67/LG2	170.3	0.988	168.3	132.3	60.5	192.8
					Average	**207**

* Ratio of the fluence functions between the RPV at EOLE and the surveillance capsule.

** The margin established by NRC in the Kewaunee SE (Margin = $2\,[(14)^2 + (28)^2]^{1/2} - 2$)

APPENDIX A: REFERENCES

A-1 W. L. Server and J. R. Pfefferle, *Master Curve Fracture Toughness Application For Point Beach Nuclear Plant Unit 2*, ATI Consulting Report ATI-021-030-2003-1, January 2003.

A-2 *Safety Evaluation by the Office of Nuclear Reactor Including the Use of a Master Curve-based Methodology for Reactor Pressure Vessel Integrity Assessment*, Docket No. 50-305, May 2001.

A-3 ASTM Standard Test Method E 1921-02, "Test Method for the Determination of Reference Temperature, T_o, for Ferritic Steels in the Transition Range," *Annual Book of ASTM Standards*, Vol. 03.01, American Society for Testing and Materials, West Conshohocken, PA.

A-4 Instruction Manual, Reactor Vessel, Point Beach Nuclear Plant No. 2, Combustion Engineering, CE Book #4869, October 1970.

APPENDIX B

DATA POINTS FOR "CIRC-FLAW" PT CURVES

[This Appendix contains PT curves that were developed using the "Circ-Flaw" Methodology from ASME Code Case N-588, which has been incorporated into Code Case N-641. There are two sets of "Circ-Flaw" curves within this Appendix. Curves in set one are those developed using the "Circ-Flaw" ART from PBNP Unit 1. The second set of curves of those developed using the "Circ-Flaw" ART from the PBNP Unit 2 intermediate to lower shell circ. weld assuming the master-curve technology was not implemented. All ART values can be found in Table 12 of Page 22. Note that since neither set becomes limiting compared to the "axial-flaw" curves presented in the main body of this report, then only the data points will be presented in this Appendix for comparison purposes.]

TABLE B-1
34 EFPY Heatup Curve Data Points Using Circ. Flaw Methodology, ASME Code Case N-641 & Unit 1 Circ. Weld ART Values (without Uncertainties for Instrumentation Errors)

60°F/hr.		Criticality Limit		100°F/hr.		Criticality Limit		Leak Test Limit	
Temp. (°F)	Press. (psig)	Temp. (°F)	Press. (psig)	Temp. (°F)	Press. (psig)	Temp. (°F)	Press. (psig)	Temp. (°F)	Press. (psig)
60	0	229	0	60	0	229	0	128	2000
60	621	229	621	60	621	229	621	229	2485
65	621	229	621	65	621	229	621		
70	621	229	621	70	621	229	621		
75	621	229	621	75	621	229	621		
80	621	229	621	80	621	229	621		
85	621	229	621	85	621	229	621		
90	621	229	621	90	621	229	621		
95	621	229	621	95	621	229	621		
100	621	229	621	100	621	229	621		
105	621	229	621	105	621	229	621		
110	621	229	621	110	621	229	621		
115	621	229	621	115	621	229	621		
120	621	229	621	120	621	229	621		
125	621	229	621	125	621	229	621		
130	621	229	621	130	621	229	621		
135	621	229	621	135	621	229	621		
140	621	229	621	140	621	229	621		
145	621	229	621	145	621	229	621		
150	621	229	621	150	621	229	621		
155	621	229	621	155	621	229	621		
160	621	229	621	160	621	229	621		
165	621	229	621	165	621	229	621		
170	621	229	621	170	621	229	621		
175	621	229	1517	175	621	229	1377		
180	621	229	1540	180	621	229	1394		
180	1517	230	1565	180	1377	230	1413		
185	1540	235	1593	185	1394	235	1434		
190	1565	240	1623	190	1413	240	1458		
195	1593	245	1657	195	1434	245	1484		
200	1623	250	1695	200	1458	250	1512		
205	1657	255	1736	205	1484	255	1544		
210	1695	260	1782	210	1512	260	1580		
215	1736	265	1833	215	1544	265	1619		
220	1782	270	1874	220	1580	270	1662		
225	1833	275	1919	225	1619	275	1710		
230	1874	280	1969	230	1662	280	1763		
235	1919	285	2025	235	1710	285	1822		
240	1969	290	2086	240	1763	290	1886		
245	2025	295	2153	245	1822	295	1958		
250	2086	300	2228	250	1886	300	2036		

TABLE B-1 - (Continued)
34 EFPY Heatup Curve Data Points Using Circ. Flaw Methodology, ASME Code Case N-641 & Unit 1
Circ. Weld ART Values (without Uncertainties for Instrumentation Errors)

60°F/hr.		Criticality Limit		100°F/hr.		Criticality Limit		Leak Test Limit	
Temp. (°F)	Press. (psig)	Temp. (°F)	Press. (psig)	Temp. (°F)	Press. (psig)	Temp. (°F)	Press. (psig)	Temp. (°F)	Press. (psig)
255	2153	305	2310	255	1958	305	2124		
260	2228	310	2401	260	2036	310	2220		
265	2310			265	2124	315	2326		
270	2401			270	2220	320	2443		
				275	2326				
				280	2443				

TABLE B-2
34 EFPY Cooldown Curve Data Points Using Circ. Flaw Methodology, ASME Code Case N-641 & Unit 1 Circ. Weld ART Values (without Uncertainties for Instrumentation Errors)

Steady State		20°F/hr.		40°F/hr.		60°F/hr.		100°F/hr.	
T (°F)	P (psig)	T (°F)	P (psig)	T (°F)	P (psig)	T (°F)	P (psig)	T (°F)	P (psig)
60	0	60	0	60	0	60	0	60	0
60	621	60	621	60	621	60	621	60	621
65	621	65	621	65	621	65	621	65	621
70	621	70	621	70	621	70	621	70	621
75	621	75	621	75	621	75	621	75	621
80	621	80	621	80	621	80	621	80	621
85	621	85	621	85	621	85	621	85	621
90	621	90	621	90	621	90	621	90	621
95	621	95	621	95	621	95	621	95	621
100	621	100	621	100	621	100	621	100	621
105	621	105	621	105	621	105	621	105	621
110	621	110	621	110	621	110	621	110	621
115	621	115	621	115	621	115	621	115	621
120	621	120	621	120	621	120	621	120	621
125	621	125	621	125	621	125	621	125	621
130	621	130	621	130	621	130	621	130	621
135	621	135	621	135	621	135	621	135	621
140	621	140	621	140	621	140	621	140	621
145	621	145	621	145	621	145	621	145	621
150	621	150	621	150	621	150	621	150	621
155	621	155	621	155	621	155	621	155	621
160	621	160	621	160	621	160	621	160	621
165	621	165	621	165	621	165	621	165	621
170	621	170	621	170	621	170	621	170	621
175	621	175	621	175	621	175	621	175	621
180	621	180	621	180	621	180	621	180	621
180	1602	180	1544	180	1486	180	1427	180	1309
185	1619	185	1562	185	1504	185	1446	185	1330
190	1637	190	1581	190	1524	190	1468	190	1354
195	1657	195	1602	195	1547	195	1491	195	1380
200	1680	200	1626	200	1571	200	1517	200	1409
205	1705	205	1652	205	1599	205	1546	205	1442
210	1732	210	1681	210	1629	210	1578	210	1478
215	1763	215	1713	215	1663	215	1614	215	1518
220	1796	220	1748	220	1701	220	1654	220	1562
225	1833	225	1787	225	1742	225	1697	225	1611
230	1874	230	1830	230	1788	230	1746	230	1666
235	1919	235	1878	235	1838	235	1800	235	1727
240	1969	240	1931	240	1894	240	1859	240	1794
245	2025	245	1990	245	1956	245	1925	245	1868
250	2086	250	2054	250	2025	250	1998	250	1951
255	2153	255	2126	255	2101	255	2079	255	2043
260	2228	260	2205	260	2185	260	2168	260	2144
265	2310	265	2293	265	2278	265	2267	265	2256
270	2401	270	2390	270	2381	270	2377	270	2377

TABLE B-3
53 EFPY Heatup Curve Data Points Using Circ. Flaw Methodology, ASME Code Case N-641 & Unit 1 Circ. Weld ART Values (without Uncertainties for Instrumentation Errors)

60°F/hr.		Criticality Limit		100°F/hr.		Criticality Limit		Leak Test Limit	
Temp. (°F)	Press. (psig)	Temp. (°F)	Press. (psig)	Temp. (°F)	Press. (psig)	Temp. (°F)	Press. (psig)	Temp. (°F)	Press. (psig)
60	0	248	0	60	0	248	0	147	2000
60	621	248	621	60	621	248	621	248	2485
65	621	248	621	65	621	248	621		
70	621	248	621	70	621	248	621		
75	621	248	621	75	621	248	621		
80	621	248	621	80	621	248	621		
85	621	248	621	85	621	248	621		
90	621	248	621	90	621	248	621		
95	621	248	621	95	621	248	621		
100	621	248	621	100	621	248	621		
105	621	248	621	105	621	248	621		
110	621	248	621	110	621	248	621		
115	621	248	621	115	621	248	621		
120	621	248	621	120	621	248	621		
125	621	248	621	125	621	248	621		
130	621	248	621	130	621	248	621		
135	621	248	621	135	621	248	621		
140	621	248	621	140	621	248	621		
145	621	248	621	145	621	248	621		
150	621	248	621	150	621	248	621		
155	621	248	621	155	621	248	621		
160	621	248	621	160	621	248	621		
165	621	248	621	165	621	248	621		
170	621	248	621	170	621	248	621		
175	621	248	1437	175	621	248	1313		
180	621	248	1452	180	621	248	1324		
180	1437	248	1468	180	1313	248	1336		
185	1452	248	1485	185	1324	248	1349		
190	1468	248	1505	190	1336	248	1363		
195	1485	248	1527	195	1349	248	1380		
200	1505	250	1550	200	1363	250	1398		
205	1527	255	1577	205	1380	255	1418		
210	1550	260	1606	210	1398	260	1441		
215	1577	265	1639	215	1418	265	1465		
220	1606	270	1674	220	1441	270	1493		
225	1639	275	1714	225	1465	275	1523		
230	1674	280	1758	230	1493	280	1557		
235	1714	285	1806	235	1523	285	1594		
240	1758	290	1860	240	1557	290	1636		
245	1806	295	1919	245	1594	295	1681		
250	1860	300	1980	250	1636	300	1732		

TABLE B-3 - (Continued)
53 EFPY Heatup Curve Data Points Using Circ. Flaw Methodology, ASME Code Case N-641 & Unit 1 Circ. Weld ART Values (without Uncertainties for Instrumentation Errors)

60°F/hr.		Criticality Limit		100°F/hr.		Criticality Limit		Leak Test Limit	
Temp. (°F)	Press. (psig)	Temp. (°F)	Press. (psig)	Temp. (°F)	Press. (psig)	Temp. (°F)	Press. (psig)	Temp. (°F)	Press. (psig)
255	1919	305	2036	255	1681	305	1787		
260	1980	310	2099	260	1732	310	1849		
265	2036	315	2168	265	1787	315	1917		
270	2099	320	2244	270	1849	320	1992		
275	2168	325	2328	275	1917	325	2075		
280	2244	330	2421	280	1992	330	2167		
285	2328			285	2075	335	2268		
290	2421			290	2167	340	2380		
				295	2268				
				300	2380				

TABLE B-4
53 EFPY Cooldown Curve Data Points Using Circ. Flaw Methodology, ASME Code Case N-641 & Unit 1 Circ. Weld ART Values (without Uncertainties for Instrumentation Errors)

Steady State		20°F/hr.		40°F/hr.		60°F/hr.		100°F/hr.	
T (°F)	P (psig)	T (°F)	P (psig)	T (°F)	P (psig)	T (°F)	P (psig)	T (°F)	P (psig)
60	0	60	0	60	0	60	0	60	0
60	621	60	621	60	621	60	621	60	621
65	621	65	621	65	621	65	621	65	621
70	621	70	621	70	621	70	621	70	621
75	621	75	621	75	621	75	621	75	621
80	621	80	621	80	621	80	621	80	621
85	621	85	621	85	621	85	621	85	621
90	621	90	621	90	621	90	621	90	621
95	621	95	621	95	621	95	621	95	621
100	621	100	621	100	621	100	621	100	621
105	621	105	621	105	621	105	621	105	621
110	621	110	621	110	621	110	621	110	621
115	621	115	621	115	621	115	621	115	621
120	621	120	621	120	621	120	621	120	621
125	621	125	621	125	621	125	621	125	621
130	621	130	621	130	621	130	621	130	621
135	621	135	621	135	621	135	621	135	621
140	621	140	621	140	621	140	621	140	621
145	621	145	621	145	621	145	621	145	621
150	621	150	621	150	621	150	621	150	621
155	621	155	621	155	621	155	621	155	621
160	621	160	621	160	621	160	621	160	621
165	621	165	621	165	621	165	621	165	621
170	621	170	621	170	621	170	621	170	621
175	621	175	621	175	621	175	621	175	621
180	621	180	621	180	621	180	621	180	621
180	1552	180	1491	180	1430	180	1368	180	1242
185	1563	185	1503	185	1442	185	1380	185	1256
190	1576	190	1516	190	1456	190	1395	190	1271
195	1590	195	1531	195	1471	195	1410	195	1289
200	1605	200	1547	200	1487	200	1428	200	1308
205	1622	205	1564	205	1506	205	1448	205	1330
210	1641	210	1584	210	1527	210	1469	210	1354
215	1662	215	1606	215	1550	215	1493	215	1381
220	1685	220	1630	220	1575	220	1520	220	1411
225	1710	225	1657	225	1603	225	1550	225	1444
230	1738	230	1686	230	1634	230	1583	230	1481
235	1769	235	1719	235	1669	235	1619	235	1522
240	1803	240	1755	240	1707	240	1660	240	1568
245	1841	245	1795	245	1749	245	1704	245	1618
250	1883	250	1839	250	1796	250	1754	250	1674
255	1929	255	1888	255	1848	255	1809	255	1736
260	1980	260	1942	260	1905	260	1870	260	1805
265	2036	265	2002	265	1968	265	1937	265	1882

TABLE B-4 – (Continued)
53 EFPY Cooldown Curve Data Points Using Circ. Flaw Methodology, ASME Code Case N-641 & Unit 1 Circ. Weld ART Values (without Uncertainties for Instrumentation Errors)

Steady State		20°F/hr.		40°F/hr.		60°F/hr.		100°F/hr.	
T (°F)	P (psig)	T (°F)	P (psig)	T (°F)	P (psig)	T (°F)	P (psig)	T (°F)	P (psig)
270	2099	270	2068	270	2039	270	2012	270	1966
275	2168	275	2141	275	2116	275	2095	275	2060
280	2244	280	2222	280	2202	280	2186	280	2164
285	2328	285	2311	285	2297	285	2287	285	2279
290	2421	290	2410	290	2402	290	2399	290	2399

TABLE B-5
34 EFPY Heatup Curve Data Points Using Circ. Flaw Methodology, ASME Code Case N-641 & Unit 2 Circ Weld ART Values (i.e. No Master Curve Technology)
(without Uncertainties for Instrumentation Errors)

60°F/hr.		Criticality Limit		100°F/hr.		Criticality Limit		Leak Test Limit	
Temp. (°F)	Press. (psig)	Temp. (°F)	Press. (psig)	Temp. (°F)	Press. (psig)	Temp. (°F)	Press. (psig)	Temp. (°F)	Press. (psig)
60	0	245	0	60	0	245	0	141	2000
60	621	242	621	60	621	242	621	242	2485
65	621	242	621	65	621	242	621		
70	621	242	621	70	621	242	621		
75	621	242	621	75	621	242	621		
80	621	242	621	80	621	242	621		
85	621	242	621	85	621	242	621		
90	621	242	621	90	621	242	621		
95	621	242	621	95	621	242	621		
100	621	242	621	100	621	242	621		
105	621	242	621	105	621	242	621		
110	621	242	621	110	621	242	621		
115	621	242	621	115	621	242	621		
120	621	242	621	120	621	242	621		
125	621	242	621	125	621	242	621		
130	621	242	621	130	621	242	621		
135	621	242	621	135	621	242	621		
140	621	242	621	140	621	242	621		
145	621	242	621	145	621	242	621		
150	621	242	621	150	621	242	621		
155	621	242	621	155	621	242	621		
160	621	242	621	160	621	242	621		
165	621	242	621	165	621	242	621		
170	621	242	621	170	621	242	621		
175	621	242	1477	175	621	242	1345		
180	621	242	1495	180	621	242	1358		
180	1477	242	1515	180	1345	242	1374		
185	1495	242	1538	185	1358	242	1391		
190	1515	242	1563	190	1374	242	1410		
195	1538	245	1591	195	1391	245	1431		
200	1563	250	1621	200	1410	250	1454		
205	1591	255	1655	205	1431	255	1480		
210	1621	260	1692	210	1454	260	1509		
215	1655	265	1734	215	1480	265	1541		
220	1692	270	1776	220	1509	270	1576		
225	1734	275	1810	225	1541	275	1615		
230	1776	280	1849	230	1576	280	1658		
235	1810	285	1892	235	1615	285	1706		
240	1849	290	1939	240	1658	290	1759		
245	1892	295	1991	245	1706	295	1817		
250	1939	300	2048	250	1759	300	1881		

TABLE B-5 - (Continued)
34 EFPY Heatup Curve Data Points Using Circ. Flaw Methodology, ASME Code Case N-641 & Unit 2
Circ Weld ART Values (i.e. No Master Curve Technology)
(without Uncertainties for Instrumentation Errors)

60°F/hr.		Criticality Limit		100°F/hr.		Criticality Limit		Leak Test Limit	
Temp. (°F)	Press. (psig)	Temp. (°F)	Press. (psig)	Temp. (°F)	Press. (psig)	Temp. (°F)	Press. (psig)	Temp. (°F)	Press. (psig)
255	1991	305	2112	255	1817	305	1952		
260	2048	310	2182	260	1881	310	2031		
265	2112	315	2260	265	1952	315	2118		
270	2182	320	2346	270	2031	320	2214		
275	2260	325	2441	275	2118	325	2319		
280	2346			280	2214	330	2436		
285	2441			285	2319				
				290	2436				

TABLE B-6
34 EFPY Cooldown Curve Data Points Using Circ. Flaw Methodology, ASME Code Case N-641 & Unit 2 Circ Weld ART Values (i.e. No Master Curve Technology)
(without Uncertainties for Instrumentation Errors)

Steady State		20°F/hr.		40°F/hr.		60°F/hr.		100°F/hr.	
T (°F)	P (psig)	T (°F)	P (psig)	T (°F)	P (psig)	T (°F)	P (psig)	T (°F)	P (psig)
60	0	60	0	60	0	60	0	60	0
60	621	60	621	60	621	60	621	60	621
65	621	65	621	65	621	65	621	65	621
70	621	70	621	70	621	70	621	70	621
75	621	75	621	75	621	75	621	75	621
80	621	80	621	80	621	80	621	80	621
85	621	85	621	85	621	85	621	85	621
90	621	90	621	90	621	90	621	90	621
95	621	95	621	95	621	95	621	95	621
100	621	100	621	100	621	100	621	100	621
105	621	105	621	105	621	105	621	105	621
110	621	110	621	110	621	110	621	110	621
115	621	115	621	115	621	115	621	115	621
120	621	120	621	120	621	120	621	120	621
125	621	125	621	125	621	125	621	125	621
130	621	130	621	130	621	130	621	130	621
135	621	135	621	135	621	135	621	135	621
140	621	140	621	140	621	140	621	140	621
145	621	145	621	145	621	145	621	145	621
150	621	150	621	150	621	150	621	150	621
155	621	155	621	155	621	155	621	155	621
160	621	160	621	160	621	160	621	160	621
165	621	165	621	165	621	165	621	165	621
170	621	170	621	170	621	170	621	170	621
175	621	175	621	175	621	175	621	175	621
180	621	180	621	180	621	180	621	180	621
180	1566	180	1506	180	1445	180	1384	180	1260
185	1579	185	1519	185	1459	185	1399	185	1276
190	1593	190	1534	190	1475	190	1415	190	1294
195	1609	195	1550	195	1492	195	1433	195	1314
200	1626	200	1568	200	1511	200	1453	200	1336
205	1645	205	1588	205	1532	205	1475	205	1361
210	1666	210	1611	210	1555	210	1499	210	1388
215	1690	215	1635	215	1581	215	1527	215	1419
220	1715	220	1662	220	1610	220	1557	220	1453
225	1744	225	1693	225	1641	225	1591	225	1490
230	1776	230	1726	230	1677	230	1628	230	1532
235	1810	235	1763	235	1715	235	1669	235	1578
240	1849	240	1803	240	1759	240	1715	240	1630
245	1892	245	1849	245	1806	245	1765	245	1687
250	1939	250	1898	250	1859	250	1821	250	1750
255	1991	255	1953	255	1918	255	1883	255	1821
260	2048	260	2014	260	1982	260	1952	260	1899

TABLE B-6 – (Continued)
34 EFPY Cooldown Curve Data Points Using Circ. Flaw Methodology, ASME Code Case N-641 & Unit 2 Circ Weld ART Values (i.e. No Master Curve Technology)
(without Uncertainties for Instrumentation Errors)

Steady State		20°F/hr.		40°F/hr.		60°F/hr.		100°F/hr.	
T (°F)	P (psig)	T (°F)	P (psig)	T (°F)	P (psig)	T (°F)	P (psig)	T (°F)	P (psig)
265	2112	265	2082	265	2054	265	2028	265	1985
270	2182	270	2156	270	2133	270	2112	270	2081
275	2260	275	2239	275	2221	275	2206	275	2187
280	2346	280	2330	280	2318	280	2309	280	2304
285	2441	285	2431	285	2425	285	2423	285	2423

TABLE B-7
53 EFPY Heatup Curve Data Points Using Circ. Flaw Methodology, ASME Code Case N-641 & Unit 2 Circ Weld ART Values (i.e. No Master Curve Technology)
(without Uncertainties for Instrumentation Errors)

60°F/hr.		Criticality Limit		100°F/hr.		Criticality Limit		Leak Test Limit	
Temp. (°F)	Press. (psig)	Temp. (°F)	Press. (psig)	Temp. (°F)	Press. (psig)	Temp. (°F)	Press. (psig)	Temp. (°F)	Press. (psig)
60	0	263	0	60	0	263	0	162	2000
60	621	263	621	60	621	263	621	263	2485
65	621	263	621	65	621	263	621		
70	621	263	621	70	621	263	621		
75	621	263	621	75	621	263	621		
80	621	263	621	80	621	263	621		
85	621	263	621	85	621	263	621		
90	621	263	621	90	621	263	621		
95	621	263	621	95	621	263	621		
100	621	263	621	100	621	263	621		
105	621	263	621	105	621	263	621		
110	621	263	621	110	621	263	621		
115	621	263	621	115	621	263	621		
120	621	263	621	120	621	263	621		
125	621	263	621	125	621	263	621		
130	621	263	621	130	621	263	621		
135	621	263	621	135	621	263	621		
140	621	263	621	140	621	263	621		
145	621	263	621	145	621	263	621		
150	621	263	621	150	621	263	621		
155	621	263	621	155	621	263	621		
160	621	263	621	160	621	263	621		
165	621	263	621	165	621	263	621		
170	621	263	621	170	621	263	621		
175	621	263	1404	175	621	263	1287		
180	621	263	1415	180	621	263	1295		
180	1404	263	1428	180	1287	263	1304		
185	1415	263	1441	185	1295	263	1313		
190	1428	263	1456	190	1304	263	1324		
195	1441	263	1472	195	1313	263	1337		
200	1456	263	1491	200	1324	263	1351		
205	1472	263	1511	205	1337	263	1366		
210	1491	263	1533	210	1351	263	1383		
215	1511	265	1558	215	1366	265	1402		
220	1533	270	1586	220	1383	270	1423		
225	1558	275	1616	225	1402	275	1446		
230	1586	280	1650	230	1423	280	1472		
235	1616	285	1687	235	1446	285	1500		
240	1650	290	1728	240	1472	290	1532		
245	1687	295	1773	245	1500	295	1567		
250	1728	300	1824	250	1532	300	1605		

TABLE B-7 - (Continued)
53 EFPY Heatup Curve Data Points Using Circ. Flaw Methodology, ASME Code Case N-641 & Unit 2
Circ Weld ART Values (i.e. No Master Curve Technology)
(without Uncertainties for Instrumentation Errors)

60°F/hr.		Criticality Limit		100°F/hr.		Criticality Limit		Leak Test Limit	
Temp. (°F)	Press. (psig)	Temp. (°F)	Press. (psig)	Temp. (°F)	Press. (psig)	Temp. (°F)	Press. (psig)	Temp. (°F)	Press. (psig)
255	1773	305	1879	255	1567	305	1648		
260	1824	310	1929	260	1605	310	1695		
265	1879	315	1980	265	1648	315	1748		
270	1929	320	2036	270	1695	320	1805		
275	1980	325	2099	275	1748	325	1869		
280	2036	330	2168	280	1805	330	1939		
285	2099	335	2244	285	1869	335	2017		
290	2168	340	2328	290	1939	340	2103		
295	2244	345	2421	295	2017	345	2198		
300	2328			300	2103	350	2303		
305	2421			305	2198	355	2418		
				310	2303				
				315	2418				

TABLE B-8
53 EFPY Cooldown Curve Data Points Using Circ. Flaw Methodology, ASME Code Case N-641 & Unit 2 Circ Weld ART Values (i.e. No Master Curve Technology)
(without Uncertainties for Instrumentation Errors)

Steady State		20°F/hr.		40°F/hr.		60°F/hr.		100°F/hr.	
T (°F)	P (psig)	T (°F)	P (psig)	T (°F)	P (psig)	T (°F)	P (psig)	T (°F)	P (psig)
60	0	60	0	60	0	60	0	60	0
60	621	60	621	60	621	60	621	60	621
65	621	65	621	65	621	65	621	65	621
70	621	70	621	70	621	70	621	70	621
75	621	75	621	75	621	75	621	75	621
80	621	80	621	80	621	80	621	80	621
85	621	85	621	85	621	85	621	85	621
90	621	90	621	90	621	90	621	90	621
95	621	95	621	95	621	95	621	95	621
100	621	100	621	100	621	100	621	100	621
105	621	105	621	105	621	105	621	105	621
110	621	110	621	110	621	110	621	110	621
115	621	115	621	115	621	115	621	115	621
120	621	120	621	120	621	120	621	120	621
125	621	125	621	125	621	125	621	125	621
130	621	130	621	130	621	130	621	130	621
135	621	135	621	135	621	135	621	135	621
140	621	140	621	140	621	140	621	140	621
145	621	145	621	145	621	145	621	145	621
150	621	150	621	150	621	150	621	150	621
155	621	155	621	155	621	155	621	155	621
160	621	160	621	160	621	160	621	160	621
165	621	165	621	165	621	165	621	165	621
170	621	170	621	170	621	170	621	170	621
175	621	175	621	175	621	175	621	175	621
180	621	180	621	180	621	180	621	180	621
180	1524	180	1461	180	1398	180	1334	180	1204
185	1532	185	1470	185	1407	185	1343	185	1214
190	1542	190	1480	190	1417	190	1354	190	1225
195	1552	195	1490	195	1428	195	1365	195	1238
200	1563	200	1502	200	1440	200	1378	200	1252
205	1576	205	1515	205	1454	205	1392	205	1267
210	1590	210	1530	210	1469	210	1408	210	1285
215	1605	215	1546	215	1486	215	1426	215	1304
220	1622	220	1564	220	1505	220	1445	220	1326
225	1641	225	1583	225	1525	225	1467	225	1350
230	1662	230	1605	230	1548	230	1491	230	1377
235	1685	235	1629	235	1574	235	1518	235	1407
240	1710	240	1656	240	1602	240	1548	240	1441
245	1738	245	1685	245	1633	245	1581	245	1478
250	1769	250	1718	250	1667	250	1617	250	1519
255	1803	255	1754	255	1706	255	1658	255	1564
260	1841	260	1794	260	1748	260	1703	260	1615
265	1883	265	1838	265	1795	265	1752	265	1671

TABLE B-8 – (Continued)
53 EFPY Cooldown Curve Data Points Using Circ. Flaw Methodology, ASME Code Case N-641 & Unit 2 Circ Weld ART Values (i.e. No Master Curve Technology)
(without Uncertainties for Instrumentation Errors)

Steady State		20°F/hr.		40°F/hr.		60°F/hr.		100°F/hr.	
T (°F)	P (psig)	T (°F)	P (psig)	T (°F)	P (psig)	T (°F)	P (psig)	T (°F)	P (psig)
270	1929	270	1887	270	1847	270	1807	270	1734
275	1980	275	1941	275	1904	275	1868	275	1803
280	2036	280	2001	280	1967	280	1936	280	1879
285	2099	285	2067	285	2038	285	2011	285	1964
290	2168	290	2140	290	2115	290	2093	290	2059
295	2244	295	2221	295	2202	295	2185	295	2163
300	2328	300	2311	300	2297	300	2286	300	2278
305	2421	305	2410	305	2402	305	2399	305	2399