Dominion Energy Kewaunee, Inc.
5000 Dominion Boulevard, Glen Allen, VA 23060

Dominion®

February 1, 2008

U. S. Nuclear Regulatory Commission
Attention: Document Control Desk
Washington, DC 20555

Serial No. 06-140D
KPS/LIC/CDS: R9
Docket No. 50-305
License No. DPR-43

DOMINION ENERGY KEWAUNEE, INC.
KEWAUNEE POWER STATION
RESPONSE TO NRC QUESTIONS REGARDING LICENSE AMENDMENT REQUEST 215, "MODIFICATION OF INTERNAL FLOODING DESIGN BASIS"

Pursuant to 10 CFR 50.90, Dominion Energy Kewaunee, Inc. (DEK) submitted a request for approval of a proposed amendment to the Kewaunee Power Station (KPS) Updated Safety Analysis Report (USAR) (reference 1). The proposed amendment would clarify the KPS USAR design criteria associated with internal flooding.

Subsequently, the Nuclear Regulatory Commission (NRC) transmitted an initial request for additional information (RAI) regarding the proposed amendment. These RAI questions and the associated DEK responses were provided on April 17, 2007 (reference 2).

On August 2, 2007, NRC transmitted a second request for additional information (reference 3). The RAI questions and DEK responses were provided on September 17, 2007 (reference 4).

On December 6, 2007, the NRC held a public meeting with DEK at NRC Headquarters in Rockville, Maryland. The purpose of the meeting was to discuss issues related to the proposed amendment. During the meeting, the NRC staff asked a number of questions that required additional documented information from DEK. The specific questions and DEK responses are provided in Attachment 1.

Attachment 2 provides proposed revisions to the KPS USAR pages that are discussed in Attachment 1.

This response does not change the conclusions of the no significant hazards determination as submitted in reference 1. A complete copy of this submittal has been transmitted to the State of Wisconsin as required by 10 CFR 50.91(b)(1).

If you have any questions or require additional information, please contact Mr. Craig Sly at (804) 273-2784.

Very truly yours,

Gerald T. Bischof
Vice President - Nuclear Engineering

COMMONWEALTH OF VIRGINIA)
)
COUNTY OF HENRICO)

The foregoing document was acknowledged before me, in and for the County and Commonwealth aforesaid, today by Gerald T. Bischof, who is Vice President – Nuclear Engineering of Dominion Energy Kewaunee, Inc. He has affirmed before me that he is duly authorized to execute and file the foregoing document in behalf of that Company, and that the statements in the document are true to the best of his knowledge and belief.

Acknowledged before me this 1ST day of February, 2008.

My Commission Expires: August 31, 2008.

Margaret B. Bennett
Notary Public

MARGARET B. BENNETT
Notary Public 354302
Commonwealth of Virginia
My Commission Expires Aug 31, 2008

References:

1. Letter from Leslie Hartz (DEK) to Document Control Desk, "License Amendment Request 215 – Modification of Internal Flooding Design Basis," dated March 17, 2006 (ADAMS Accession Nos. ML060760589).
2. Letter from E. S. Grecheck (DEK) to Document Control Desk, "Response to NRC Request for Additional Information Regarding License Amendment Request 215, Modification of Internal Flooding Design Basis," dated April 17, 2007 (ADAMS Accession No. ML071080206).
3. Letter from P. D. Milano to D. A. Christian (DEK), "Kewaunee Power Station – Request for Additional Information Related to Internal Flooding Design-Basis (TAC No. MD0511)," dated August 2, 2007.
4. Letter from G. T. Bischof (DEK) to Document Control Desk, "Response to Second NRC Request for Additional Information Regarding License Amendment Request 215, Modification of Internal Flooding Design Basis," dated September 17, 2007 (ADAMS Accession No. ML072640343).

Attachments:

1. Response to NRC Questions Regarding Kewaunee License Amendment Request 215, "Modification of Internal Flooding Design Basis."
2. Proposed Revisions to Marked-up KPS USAR Pages Included in LAR-215.

Commitments made by this letter: None.

cc: Regional Administrator, Region III
U.S. Nuclear Regulatory Commission
2443 Warrenville Road
Suite 210
Lisle, IL 60532-4352

Mr. P. D. Milano
U.S. Nuclear Regulatory Commission
Mail Stop O 8 C2
Washington, D. C. 20555

NRC Senior Resident Inspector
Kewaunee Power Station

Public Service Commission of Wisconsin
Electric Division
P. O. Box 7854
Madison, WI 53707

ATTACHMENT 1

RESPONSE TO NRC QUESTIONS REGARDING KEWAUNEE LICENSE AMENDMENT REQUEST 215 "MODIFICATION OF INTERNAL FLOODING DESIGN BASIS"

KEWAUNEE POWER STATION

DOMINION ENERGY KEWAUNEE, INC.

Response to NRC Questions Regarding
Kewaunee License Amendment Request 215

Pursuant to 10 CFR 50.90, Dominion Energy Kewaunee, Inc. (DEK) submitted a request for approval of a proposed amendment to the Kewaunee Power Station (KPS) Updated Safety Analysis Report (USAR) (reference 1). The proposed amendment would clarify the KPS USAR design criteria associated with internal flooding.

Subsequently, the Nuclear Regulatory Commission (NRC) transmitted an initial request for additional information (RAI) regarding the proposed amendment. These RAI questions and the associated DEK responses were provided on April 17, 2007 (reference 2).

On August 2, 2007, NRC transmitted a second request for additional information (reference 3). The RAI questions and DEK responses were provided on September 17, 2007 (reference 4).

On December 6, 2007, the NRC held a public meeting with DEK at NRC Headquarters in Rockville, Maryland. The purpose of the meeting was to discuss issues related to the proposed amendment. During the meeting the NRC staff asked a number of questions that required additional documented information from DEK. The specific questions and DEK responses are provided below. Attachment 2 provides proposed revisions to the KPS USAR pages that are discussed in several of the responses provided below.

Question 1

Operator Actions

> *Describe the criteria or methodology used in determining the adequacy of operator actions required to mitigate a flooding event and include the criteria in the Kewaunee Power Station (KPS) Updated Safety Analysis Report (USAR).*

DEK Response

Time critical operator actions are validated in accordance with KPS procedure GNP-05.16.06, "Validation of Time Dependant Operator Actions." Calculation 0064-0011-KMK-01, "Potential Flooding Sources in the Turbine Building," used the plant simulator and plant walk-throughs, as appropriate, to validate that operators can accomplish specified operator actions within the time limits required to mitigate the associated event.

Operator actions have been validated and are documented for three time-critical design basis flooding events. These three events are:

1. A rupture of a 20-inch diameter service water header in the turbine building (23 minutes).
2. A rupture of a 10-inch diameter fire protection header in the turbine building (76.5 minutes).
3. A rupture of a circulation water expansion joint (7.5 minutes).

KPS validated that operator actions in accordance with approved procedures will isolate the flooding sources prior to the flood height exceeding the height of installed flood barriers. Furthermore, although not credited, an automatic trip of the circulating water pumps has been installed. The installed instrumentation will automatically trip the circulating water pumps on high water level in the turbine building (3.5 +/- 1.0 inches above floor level of 586-foot).

Non-time critical operator actions and operator actions for beyond design basis events were developed in accordance with DOM-QA-1, "Dominion Nuclear Facility Quality Assurance Program Description." A discussion of the use of manual action and associated operator response times for flooding scenarios has been included in the marked-up USAR section B11.2 provided in Attachment 2.

Question 2

Drain Lines

Provide a discussion about any drain lines that are credited in reducing the flooding level in a room. Include the type and frequency of preventative maintenance used to ensure that the credited capability remains valid.

DEK Response

One drain line is credited for flow to reduce flooding level in a room. The flooding case of interest is a rupture of a 4-inch condensate pipe in the Steam Generator Blowdown Treatment (SGBT) tank room. This 4-inch drain line is assumed to be open and flowing from the adjacent non-safeguards 4160-V bus room to the turbine building sump in order to minimize the flood volume available to the adjoining Auxiliary Building basement area containing 480-V safeguards bus motor control centers (MCCs). The SGBT tank room and the non-safeguards 4160-V bus room connect through a normally open doorway. The non-safeguards 4160-V bus room connects to areas containing 480-V safeguards bus MCCs through a series of doors and interfacing zones.

The drain line is embedded in a concrete basement floor that is approximately 4-feet thick and therefore is not considered a flooding source. The drain line is cleaned using preventative maintenance task PM30-545, "Flush Check Valve and Drain Lines." This PM task requires cleaning the drain line on an 18-month frequency. The next scheduled performance of PM30-545 is September 2, 2008.

Question 3

Emergency Diesel Generator (EDG) Room

a. *Describe whether this license amendment request will change the assumptions described in USAR Section 8.2.3.5, "Reliability Assurance," with regards to the rupture of a service water line by providing the following information:*

   i. *Describe the break in the DG room currently assumed in USAR.*

   ii. *Describe how site personnel would mitigate this leak. This answer should address: (1) equipment affected directly by the leak, (2) equipment that is deprived of flow due to the leak and how this affects the operability of the equipment, and (3) the automatic and operator actions necessary to mitigate the event.*

   iii. *Describe any changes that will occur to the assumed break size if this amendment is approved.*

   iv. *Describe how site personnel would mitigate this leak. This answer should address: (1) equipment affected directly by the leak, (2) equipment that is deprived of flow due to the leak and how this affects the operability of the equipment, and (3) the automatic and operator actions necessary to mitigate the event.*

DEK Response

i. *Describe the break in the DG room currently assumed in the USAR.*

By design basis, the KPS USAR does not assume a rupture in the safety related service water line in the Emergency Diesel Generator Room.

Amendment No. 4 to the Kewaunee Power Station Facility Description and Safety Analysis Report (FDSAR) was submitted in a letter from G. F. Hrubesky of WPS to Dr. Peter A Morris of the AEC Division of Reactor Licensing on April 1, 1968 (reference 5).

This amendment addressed an AEC question (among others) on single failures in ECCS and their support systems including the service water system. The specific conclusion for the service water system was that "rupture is not considered credible."

However, FSAR question (Q8.16) was later submitted to Kewaunee by the AEC on September 23, 1971 (reference 6). This question was focused on a hypothetical rupture of a safety related service water line either running through or in the immediate vicinity of the diesel generator rooms. The AEC requested an analysis of the effects of such a rupture on the emergency diesel generators and the 4160-V switchgear. In responding to this question, a pipe rupture in this safety related service water line was assumed, and the flooding effect on the emergency diesel generators and the 4160-V switchgear was assessed. This FSAR question and the associated Kewaunee response are discussed in more detail below.

ii. Describe how site personnel would mitigate this leak. This answer should address: (1) equipment affected directly by the leak, (2) equipment that is deprived of flow due to the leak and how this affects the operability of the equipment, and (3) the automatic and operator actions necessary to mitigate the event.

Background

While Kewaunee does not assume a rupture in the safety related service water line either running through or in the immediate vicinity of the Emergency Diesel Generator rooms, modifications were made to the plant based on a question from the AEC Electrical Branch (referenced above) regarding a hypothetical safety related service water line rupture in these rooms. The following FSAR question (Q8.16) was forwarded to Kewaunee by the AEC on September 23, 1971 (reference 6):

> *"Figure 1.2-1 of the FSAR shows service water lines either running through or in the immediate vicinity of the emergency diesel generator rooms. Provide an analysis of the effect of a rupture of one of these service water lines on the emergency power systems."*

On December 15, 1971, Kewaunee provided the following response as part of Amendment No. 13 to the FSAR (reference 7):

> *"The rupture of a service water line in an Emergency Diesel Generator Room could result in the loss of the generator or the safeguards bus in that room. Administrative operation from the Control Room of Type I Service Water valving would isolate the break and, if required, realign the Service Water supplies through the intact piping from the operating Service Water Pumps."*

The response above remains in section 8.2.3.5 of the current KPS USAR. Subsequent to submission of this response, the AEC opened an unresolved item in AEC Inspection Report 050-305/72-04 regarding a hypothetical rupture of a safety related service water line in the screen-house tunnel area between the diesel generator rooms and the effect of such a rupture on the emergency diesel generators and the 4160V switchgear. Modifications were subsequently made to the diesel room thresholds and doors to make them more leak resistant and a concrete barrier was installed in the pipe trench to prevent significant water ingress into the EDG rooms from this hypothetical rupture. Based on these actions the unresolved item was closed in AEC Inspection Report 050-305/73-01.

The modifications discussed above were also designed to ensure that in the case of a hypothetical rupture of the safety related service water line in either EDG room, the door located between the EDG room and the screenhouse tunnel would open prior to the other door in the EDG room. Thus, the modifications provided a reasonable assurance that any hypothetical water accumulation in the EDG room would preferentially travel down the screenhouse tunnel to the screenhouse rather than to safeguards alley.

(1) equipment affected directly by the leak

As stated above, the equipment affected directly by a hypothetical service water rupture in an EDG room is the EDG and safeguards bus in the EDG room that has the rupture. In the case of a "B" service water header rupture in the "A" EDG room, the "A" EDG and safeguards bus could be lost.

(2) equipment that is deprived of flow due to the leak and how this affects the operability of the equipment

No equipment is deprived of flow since Kewaunee does not assume a rupture in the safety related service water line in the EDG rooms. The FSAR question (Q8.16) specifically asked about the effect of a rupture of a safety related service water line on the emergency power systems. This question was answered by stating that such a rupture, if assumed, "could result in the loss of the generator or the safeguards bus in that room." The loss of the diesel generator or safeguards bus would be a result of service water affecting the components within the EDG room of concern. As discussed above, modifications were made to address flooding from such a hypothetical rupture and direct associated water down the screenhouse tunnel to the screenhouse, which limits any loss of equipment to the emergency diesel generator or the safeguards bus in the affected room.

(3) the automatic and operator actions necessary to mitigate the event.

No automatic actions are necessary to mitigate this event. The diesel room door would open into the screenhouse tunnel, as designed, and allow water to flow through the

screenhouse tunnel and into the screenhouse. The Control Room operators would be made aware of the event by loss of operating equipment, various flood level indications, or turbine building sump level indication.

KPS Procedure OP-KW-AOP-SW-001, "Abnormal Service Water System Operation," would be entered upon determination of a malfunction in the service water system. This procedure directs an investigation of the source of the malfunction. The procedure directs local isolation of any system ruptures if possible. If local isolation of a rupture is not possible, the header could be isolated by Type I (Class I) service water valves if required. Procedure OP-KW-AOP-SW-001 also contains steps to align service water from one service water train through intact piping in the opposite service water train by cross-connect valves, if required.

iii. Describe any changes that will occur to the assumed break size if this amendment is approved.

iv. Describe how site personnel would mitigate this leak. This answer should address: (1) equipment affected directly by the leak, (2) equipment that is deprived of flow due to the leak and how this affects the operability of the equipment, and (3) the automatic and operator actions necessary to mitigate the event.

No changes will occur to the assumed rupture size, event consequences, or the operator actions stated in USAR section 8.2.3.5 if this amendment is approved.

v. Additional Risk Reduction Efforts as Discussed in a November 30, 2006 Public Meeting at NRC Region III Office.

While not part of the design basis of the plant, the following additional actions to reduce plant flooding risk have been or are planned to be taken. Kewaunee continues to evaluate additional modifications that will reduce flooding risk.

1. Completed Actions
   a. Installed flood sensors and alarms for Safeguards Alley.
   b. Installed circulating water pump trip on high Turbine Building water level.
   c. Included new operator actions to address loss of battery room, AFW pump room or safeguards bus ventilation during safeguards flooding.
   d. Implemented procedure changes enhancing service water isolation.
   e. Raised cables for Turbine Building basement Fan Coil Unit B (cooling for Auxiliary Feedwater pump B room).

2. Actions Scheduled to Complete by May 2008
   a. Install watertight door between Auxiliary Building and Safeguards Alley (Door 8).
   b. Install spray shields around safety related service water piping in Safeguards Alley.

Question 4

Fire Protection System:

a. *Explain if dry fire protection sprinkler systems (pre-action) are considered as a potential flooding source. If not, describe why it is reasonable to assume they will not become a flooding source.*

b. *Describe if and how the dry fire protection sprinkler systems were walked down as part of the sample and describe the evaluation of them.*

DEK Response

a. *Explain if dry fire protection sprinkler systems (pre-action) are considered as a potential flooding source. If not, describe why it is reasonable to assume they will not become a flooding source.*

Kewaunee Design Change Request (DCR) 3393 installed a pre-action fire suppression system in Safeguards Alley. Since Safeguards Alley contains numerous safety related components, this fire protection piping was seismically designed and installed to ensure its structural integrity. This dry fire protection piping sprinkler system is the only dry fire protection sprinkler system in the plant located in a flooding zone and is not considered a potential flooding source.

This fire suppression system is a double interlock pre-action system that requires two components to actuate in order for water to flow out of the system. The two components that must actuate are: 1) a signal from the fire detection system in the fire zone protected by the sprinkler system, and; 2) the fusing (melting) of the sensing element in a sprinkler head. A short discussion of these two components is provided below:

1. If there is a fire in the area, one or more of the fire detectors in the area senses the fire, actuates local and Control Room alarms, and causes the pre-action valve's solenoid valve to open.

2. When a sprinkler head fuses (due to a fire) the sensing element melts, creating an opening that relieves the supervisory air pressure in the sprinkler piping through the sprinkler head. Loss of supervisory air pressure causes the pre-action valve's pneumatic actuated release valve to open. A low-pressure alarm in the Control Room is generated as the supervisory air pressure drops.

The solenoid valve and pneumatic release actuator are installed in series in the drain/release line of the pre-action (deluge) valve. With both the solenoid valve and pneumatic release actuator open, the open flow path relieves water pressure in the priming chamber that holds the pre-action valve closed. When the priming chamber pressure is less than the incoming line pressure, the pre-action valve opens and fills the sprinkler system piping with water.

The dry fire protection sprinkler piping inside Safeguards Alley is seismically designed and installed and therefore is not considered as a flooding source. The system is dry (empty of water) unless there is a fire inside Safeguards Alley that actuates one or more fire detectors. The analyses include both the normal (empty or dry) conditions and the water filled condition. Therefore, a seismic event will not result in the sprinkler piping becoming a flooding source inside Safeguards Alley.

b. *Describe if and how the dry fire protection sprinkler systems were walked down as part of the sample and describe the evaluation of them.*

The dry fire protection piping in the sprinkler system described above was not included in the walkdowns. It is a normally dry piping system and is seismically designed. Therefore, fire protection piping is not considered a potential flooding source.

Note: The dry fire protection sprinkler system discussed above is not the same piping discussed in the response to Question 7.

Question 5

Single Failure

Explain the licensee's basis for not considering an additional single failure during a flooding event. Additionally, describe and include any USAR changes that will be made to clarify that an additional single failure does not need to be assumed in an internal flooding event.

DEK Response

The current USAR section B.5, Protection of Class I Items, is in error with respect to the original licensing basis for Kewaunee. The original FSAR had the following paragraph at the end of the list of potential damaging events:

> *"No protection is required if the factors described under a, b, f and g cannot affect any Class I systems, or if redundant systems are provided and the physical separation of these systems is sufficient to prevent these factors from damaging both systems. Under c and d, redundancy and physical separation may decrease the requirements for protection. If redundancy and physical separation are not used, and if the surrounding building is not designed as a missile barrier, missile protection by shielding is necessary, either by shielding the source itself or by shielding the system."*

This paragraph was in the original Facility Description and Safety Analysis Report (FDSAR) submitted in 1967 and remained relatively unchanged throughout the licensing process. It clearly allows for redundancy to provide a necessary function if a needed component is damaged by one of the stated events.

In late 1972, the scenario of a High Energy Line Break (HELB) outside of containment was factored into the licensing process for Kewaunee. The criteria specified for HELB analysis stated the requirement to consider an additional single failure in addition to the consequences of the event. This was incorporated into the evaluations prepared and submitted as amendments to the FSAR. FSAR section 10A was added to provide the HELB evaluations. Supplement No. 2 of the Kewaunee Safety Evaluation Report, dated May 10, 1973 (reference 8), accepted the evaluations for HELB outside containment and Kewaunee was licensed in December 1973.

The listed scenarios in FSAR section B.5 included HELB related events. Item 'b' was uniquely a HELB scenario and Item 'a' would apply to both HELB and non-HELB events. The final paragraph in FSAR section B.5 identified above was not revised as part of the HELB FSAR amendments. Therefore, at the time of the issuance of the Kewaunee operating license, there was a conflict between FSAR section B.5 and section 10A.

In 1982, the project to update the FSAR identified this conflict. The attempt was made to incorporate the additional single failure criteria to HELB events to section B.5 for consistency with USAR section 10A. The attempt, however, resulted in an additional error being introduced into the Updated Safety Analysis Report (USAR). First, instead of being applied only to HELB events, the single failure criterion was applied to all events in section B.5. Second, the redundancy paragraph that still applied to non-HELB events was removed.

The proposed revision to USAR section B.5 is intended to correct the original inconsistency in section B.5 and to retain the original redundancy requirements that were lost in the FSAR update process. Attachment 2 provides a proposed revised mark-up of the KPS USAR section B.5

Question 6

Safe Shutdown:

The licensee has stated that KPS is a Hot Shutdown Plant. The KPS Technical Specifications (TSs) define Hot Shutdown as ~0% fission power with a core operating limits report (COLR)-specified shutdown margin and an average reactor coolant system temperature of ≥ 540 ° F. The Standard Technical Specifications, and the TSs for other similar age units, define hot shutdown as K_{eff} < 0.99 and average reactor coolant system temperature between, but not including, 200° F and 350° F. On this basis, provide the following:

a. *A flooding safe shutdown equipment list in the USAR. If not, discuss why not necessary.*

b. *A description about why the licensee believes KPS is a hot shutdown plant. Address the basis for limiting the scope of protected safety-related equipment to that required for hot shutdown, considering that the NRC letter from R. C. DeYoung, NRC, to E. W. James, WPSC, dated September 26, 1972, requested review of non-Category I equipment failures that could adversely affect the performance of safety-related equipment either required for safe-shutdown of the facility or to limit the consequences of an accident. The response from Wisconsin Public Service Corporation dated October 31, 1972, similarly addresses safety-related equipment either required for safe-shutdown of the facility or to limit the consequences of an accident.*

c. *For flooding events, a justification as to why the safe shutdown condition after a flooding event should not be defined as an average reactor coolant system temperature of < 350 ° F.*

d. *A time limit for achieving cold shutdown conditions following a flooding event.*

DEK Response

a. *A flooding safe shutdown equipment list in the USAR. If not, discuss why not necessary.*

The internal flooding Safe Shutdown Equipment List (SSEL) is a comprehensive compilation of all needed equipment in each Class I structure of the Kewaunee Power Station and the non-Class I portion of the Turbine Building. This SSEL contains 365 unique components and would represent an excessive amount of detail as a USAR table. The development and basis of the internal flooding SSEL is documented in Attachment 1 to Kewaunee Calculation No. X10072, *Safe Shutdown Assessment of Internal Flooding Levels Due to Postulated Pipe or Tank Rupture.* The calculation is designated as safety related. Future changes to the internal flooding SSEL would require a revision to the safety related calculation. Changes to safety related procedures at KPS that require engineering approval are subject to the provisions of 10 CFR 50.59.

Revisions to the proposed KPS USAR section B.11.2 have been made to reference the location of the internal flooding SSEL. A marked-up version of KPS USAR section B.11.2 is provided in Attachment 2.

b. A description about why the licensee believes KPS is a hot shutdown plant.

In a Safety Evaluation Report regarding low temperature overpressure protection systems at KPS (reference 9), the NRC stated:

> *"The Kewaunee plant was licensed on the basis that reaching hot shutdown status is sufficient."*

There are no licensing documents specifically docketed to Kewaunee that establish a safe shutdown definition for internal flooding other than those associated with HELB related flooding. Part of the intent of the proposed amendment was to formally specify the safe shutdown condition for internal flooding events as hot shutdown. The proposed definition of flooding safe shutdown as hot shutdown is based on the following:

A definition of safe shutdown for internal flooding is provided in NUREG-1174, "Evaluation of Systems Interactions in Nuclear Power Plants, Technical Findings Related to Unresolved Safety Issue A-17" (reference 10). The NUREG contains an appendix entitled, "Internal Flooding and Water Intrusion Insights," which states the following:

> *"Safe-shutdown equipment for a flood or water intrusion event would typically include the equipment to perform the following functions:*
>
> - *Bring the plant to hot shutdown and establish heat removal.*
> - *Maintain support systems necessary to establish and maintain hot shutdown.*

- *Maintain control room functions and instrumentation and controls necessary to monitor hot shutdown."*

NRC Task Interface Agreement (TIA) 2005-10 (reference 11) provides some clarification of needed equipment. TIA 2005-10 addresses three issues related to KPS residual heat removal (RHR) pump vulnerability to flooding due to random and seismically induced failures of non-seismic qualified piping. TIA 2005-10 makes the following statement regarding USAR section B.5.a (as currently written in the USAR):

> *"USAR, Appendix B, Section B.5, "Protection of Class I Items," states that Class I items are protected against damage from 'Rupture of a pipe or tank resulting in serious flooding or excessive steam release to the extent that the Class I function is impaired.' Thus, the protection against damage from rupture of a pipe is limited to those conditions where the system is needed to perform its Class I function."*

In other words, in the event of a pipe rupture, equipment needed to achieve and maintain safe shutdown should be identified and protected and other equipment (Class I or otherwise) is not addressed or covered for this event because it does not require protection to mitigate the event.

Kewaunee's October 31, 1972 letter (reference 12), referenced both the equipment "required for safe shutdown" and equipment "to limit the consequences of an accident" because that was the scope of the requested review. This scope was addressed by assessing the potential consequences of non-category I system failures on "engineered safety systems." The consequences of the three identified lines were stated as acceptable in reference 12, "...because of the safety equipment redundancy and design arrangement, the functional purpose of the safety equipment would not be jeopardized in the event of failure of any of these lines." This basis for acceptability is consistent with USAR section B.5.a requirements for protection of equipment. However, the requested review did go beyond the requirements of USAR B.5.a for individual event scenarios such as internal flooding, since the evaluation considered, as requested, ESF equipment such as containment spray pumps which are needed for a LOCA but not internal flooding events.

c. *For flooding events, a justification as to why the safe shutdown condition after a flooding event should not be defined as an average reactor coolant system temperature of < 350 °F.*

The NUREG-1174 safe shutdown criteria (reference 11) previously discussed does not specify cooldown capability, however, the equipment used for heat removal capability at hot shutdown is also used for cooldown of the system to reach the conditions at which the Residual Heat Removal (RHR) system can be used (≤ 350 °F) to bring the system

to cold shutdown. If the RHR system sustains flood damage and an extended period of time is necessary to repair the system, it is inherently safer to hold the reactor at the lower temperature of 350 °F, than at the hot shutdown condition. Accordingly, Dominion proposes that the safe shutdown definition for internal flooding be established as the ability to achieve and maintain hot shutdown and to cooldown to 350 °F within 72 hours. Revisions to the proposed USAR Section B.11 have been made to reflect this safe shutdown definition for internal flooding.

d. A time limit for achieving cold shutdown conditions following a flooding event.

Cold shutdown would be achieved when practical as dictated by equipment availability. No specific time limit is proposed to achieve cold shutdown following an internal flooding event. Attachment 2 provides a proposed revised mark-up of KPS USAR sections B.11.2 and B.11.3.

Question 7

Non-Seismic Class I/I Piping*

a. Corrosion

i. For non-Class I/I piping that has been evaluated to maintain its pressure boundary during a design basis earthquake (DBE), describe any programs, inspections, evaluations, or other investigations into corrosion to ensure that the assumed/required integrity remains valid.*

ii. For the non-Class I/I piping evaluated to maintain its pressure boundary during a DBE, describe any future actions planned to evaluate or assess corrosion.*

b. Evaluation of non-Class I/I piping.*

i. If limiting cases were used to evaluate multiple piping sections for the non-Class I/I piping, describe the methodology used to select the limiting case.*

ii. For the non-Class I/I piping evaluated to maintain its pressure boundary during a DBE, describe the acceleration spectrum used and why it is bounding.*

iii. For the non-Class I/I piping evaluated to maintain its pressure boundary during a DBE, describe any modifications that were necessary to assure the continued integrity of the piping.*

c. *Cast Iron valves:*

i. *For non-Class I/I* piping evaluated to maintain its pressure boundary during a DBE, identify the number of cast iron valves, their associated system, and location. Additionally, describe the importance of these cast iron valves as a potential flooding source.*

ii. *For non-Class I/I* piping evaluated to maintain its pressure boundary during a DBE, describe how primary and secondary stresses were combined in the evaluation of the stresses in cast iron valves.*

iii. *For non-Class I/I* piping evaluated to maintain its pressure boundary during a DBE, describe why the method of combining primary and secondary stresses is acceptable in cast iron valves.*

iv. *For non-Class I/I* piping evaluated to maintain its pressure boundary during a DBE, describe the acceptance criteria for stress levels in the cast iron valves as compared to the valve's ultimate tensile stress (UTS).*

v. *For non-Class I/I* piping evaluated to maintain its pressure boundary during a DBE, provide a justification for the allowed stress levels for cast iron valves.*

d. *Anchor Bolts:*

i. *For non-Class I/I* piping evaluated to maintain its pressure boundary during a DBE, describe the value and use of required safety factor for anchor bolts.*

ii. *For non-Class I/I* piping evaluated to maintain its pressure boundary during a DBE, provide the justification for this safety factor for anchor bolts.*

e. *Buckling:*

For non-Class I/I piping evaluated to maintain its pressure boundary during a DBE, describe how buckling was evaluated for pipe supports and hangers.*

DEK Response

a. *Corrosion*

i. *For non class I/I* piping evaluated to maintain its pressure boundary during a design basis earthquake, describe any programs, inspections, evaluations, or other investigations into corrosion.*

Forty seven non-Class I/I* piping segments were evaluated to maintain their pressure boundary during a design basis earthquake. These piping segments are in the following systems:

- Auxiliary Feedwater
- Chemical Feed
- Fire Protection
- Heating Steam
- Steam Generator Blowdown Treatment
- Service Water
- Traps and Drains
- Potable Water
- Spent Fuel Pool

There are several programs in place at KPS to monitor for corrosion in these systems.

1. Flow Accelerated Corrosion Program: The Flow Accelerated Corrosion (FAC) Inspection Program implements a standardized method of identifying, inspecting and tracking components which are susceptible to FAC wear in both single and two-phase flow conditions. The FAC program conforms to EPRI NSAC-202L, "Recommendations for an Effective Flow-Accelerated Corrosion Program" (reference 14). The following systems are susceptible to FAC and within the scope of the FAC program:

   - Condensate
   - Main Feedwater
   - Main Steam
   - Steam Dump
   - Air Removal
   - SG Blowdown Treatment
   - Heater Drains
   - Bleed Steam
   - Turbine Building Traps and Drains
   - Heating Steam
   - Turbine Drain and Gland Steam

2. Service Water Inspection Program: The Service Water Inspection Program implements recommended action III of Generic Letter 89-13, "Service Water System Problems Affecting Safety Related Equipment" (reference 15). The Service Water Inspection Program monitors system piping and components with the objective of protecting against degradation caused by corrosion, erosion, silting and bio-fouling. The Service Water and Fire Protection systems are within the scope of the Service Water Inspection Program.

3. Boric Acid Corrosion Control Program (BACC): The Boric Acid Corrosion Control program monitors borated systems for leakage in order to prevent corrosion to carbon steel components. The following systems are within the scope of the Boric Acid Corrosion Control program.

   - Reactor Coolant
   - Spent Fuel Pool

- Safety Injection
- Residual Heat Removal
- Chemical Volume Control
- Internal Containment Spray
- Primary Sampling

4. System Engineering walkdown of assigned systems and reporting discrepancies via the corrective action program: ER-AA-SYS-1002, "System Engineering Walkdowns," directs system engineers to make note of any evidence of leakage.

To date, there has been no significant corrosion detected in the 47 non-Class I/I* piping segments evaluated to maintain their pressure boundary during a design basis earthquake. Overall, corrosion degradation has been effectively managed by the programs discussed above. Procedures contain requirements for conducting inspections and guidance for entering issues into the corrective action program for resolution. Operating experience at KPS indicates there have been approximately six through-wall leaks to-date in the service water system. The leaks were pin-hole in size due to MIC corrosion/under deposit pitting. The leaks did not pose a significant spray hazard and did not lead to the inability of safety related equipment to perform its intended safety function.

ii. For the non class I/I piping evaluated to maintain its pressure boundary during a design basis earthquake, describe any future actions planned to evaluate or assess corrosion.*

Future inspection of the piping segments will continue to be conducted and controlled by the inspection programs described above.

b. <u>Evaluation of Non-Class I/I Piping</u>*

i. If limiting cases were used to evaluate multiple piping sections for the non-Class I/I piping, describe the methodology used to select the limiting case.*

Screening for limiting cases to evaluate multiple piping sections for non-Class I/I* piping was performed only in the Safeguards Alley area. Screening was not used for the specific evaluations performed for the RHR pump pit flood zone, EDG room fire protection piping, and two additional segments of Auxiliary Building piping.

A bounding approach was used for piping in Safeguards Alley. Each segment of Safeguards Alley piping was screened against predetermined acceptance criteria that are primarily based on the response of piping systems to a strong motion earthquake. Experienced based screening is based on the methodology put forth in references 16, 17, 18, 19.

The following potential seismic vulnerabilities were considered:

- Piping system materials and physical condition (brittle materials and corrosion).
- Spacing and type of supports.
- Inadequate equipment anchorage.
- Seismic Anchor Motions (SAM) resulting from large differential motions of structures to which the piping is attached and large motions of flexible header piping imposed upon smaller stiff branch piping.
- Potentially vulnerable joint types (threaded joint and Victaulic couplings etc).
- Excessive equipment nozzle loads.
- Large concentrated and eccentric weights.
- Interaction with other components or structures.

The following attributes were used in selecting bounding supports:

- Supports with the largest span or supports close to heavy components.
- Supports reacting load from long axial runs.
- Short rods adjacent to longer rods.
- Occasional stiff supports in long flexible piping runs.
- Supports with fewest or smallest anchor bolts.
- Gang supports reacting loads from several pipes.
- Three-way supports or anchors (six way supports).
- Anchors at the terminal ends of piping systems that may be heavily loaded.
- Welded attachments to the pipe such as lugs or trunnions that may be poorly proportioned or designed.
- Welded attachments such as small lugs or trunnions attached to large diameter piping.

A team consisting of at least two Seismic Capability Engineers performed walkdown screenings. The outlier models were selected from the segments that either exceeded the preset screening caveats or were the closest to the upper bounds of the screening caveats. These outlier models were analyzed using manual or computerized methods and were demonstrated to meet the piping stress acceptance criteria submitted for NRC staff review in reference 4.

After completion of the representative enveloping case piping analyses, a population of worst case supports was selected considering both analyzed and unanalyzed piping segments in the area. This population also included any interface anchors (six way restraints) that existed. These supports were evaluated against the pipe support acceptance criteria submitted for NRC staff review in reference 4.

ii. *For the non-Class I/I* piping evaluated to maintain its pressure boundary during a DBE, describe the acceleration spectrum used and why it is bounding.*

Evaluations used the DBE floor response spectra that enveloped all floors from the basemat to the highest Auxiliary Building floor elevations. The evaluated piping segments are confined well within these elevations. Therefore, the spectra used in the evaluation represent bounding seismic demand on the piping.

iii. *For the non-Class I/I* piping to maintain its pressure boundary during a DBE, describe any modifications that were necessary to assure the continued integrity of the piping.*

No modifications were required to assure the continued integrity of the piping as a result of this evaluation. However, one U-bolt was replaced to provide additional strength beyond requirements.

c. *Cast Iron Valves*

i. *For the non-Class I/I* piping evaluated to maintain its pressure boundary during a DBE, identify the number of cast iron valves, their associated system, and location. Additionally, describe the importance of these cast iron valves as a potential flooding source.*

Only two cast iron gate valves were identified. Both valves are located in the Safeguard Alley flood zone. Each is a 2-1/2 inch cast iron gate valve and both are located in the Cardox Tank room. They are cast from gray cast iron material specification ASTM A126 Grade B. One valve is in the Fire Protection system (valve number FP-240), and the other valve is in the Service Water system (valve number SW-1700). There are other cast iron valves in the plant which are outside designated flood zones and therefore, do not pose a potential flooding problem.

As stated in our response to Question 7.c.ii below, DEK believes that: 1) ensuring loading of these cast iron valves to less than 35% of UTS is a reasonable acceptance criteria for justification of interim operability, and; 2) ensuring loading is limited to less than 20% of UTS is a reasonable acceptance criterion for full qualification.

The stress calculated on the FP-240 valve body using the valve end loads and conservative pipe section properties is as follows:

> Stress due to pressure, dead weight, DBE inertia and DBE anchor movement (primary plus secondary stress) is equal to 7422 psi. The UTS of the valve body material ASTM A-126 Grade B is 31,000 psi. Thus, the applied primary plus secondary stress on the valve body is less than 24% of UTS.

Thus, valve FP-240 is considered operable and will be replaced.

The stress calculated on the SW-1700 valve body using the valve end loads and conservative pipe section properties is as follows:

> Stress due to pressure, dead weight, DBE inertia and DBE anchor movement (primary plus secondary stress) is equal to 1,331 psi. The UTS of the valve body material ASTM A-126 Grade B is 31,000 psi. Thus, the applied primary plus secondary stress on the valve body is less than 5% of UTS.

Thus, valve SW-1700 considered fully qualified. However, as a conservative measure, SW-1700 will be also be replaced.

ii. For the non-Class I/I piping evaluated to maintain its pressure boundary during a DBE, describe how the primary and secondary stresses were combined in the evaluation of stresses in cast iron valves.*

A methodology was formalized to evaluate primary, secondary and primary plus secondary stresses in the cast iron valves. For past evaluations, primary stress in a DBE condition due to DBE inertia and other sustained loading was limited to 20% of UTS. The secondary stress due to DBE anchor movements was limited to 15% of UTS. Primary plus secondary stress due to DBE inertia, DBE anchor movements and other sustained loading was limited to 35% of UTS. Limiting loading to 35% of UTS is considered a reasonable acceptance criteria for establishing interim operability of cast iron valves in non-Class I/I* piping evaluated to maintain its pressure boundary during a DBE (for the purposes of identifying internal flooding sources), but not acceptable for establishing full qualification.

For current evaluations, the primary sustained stress due to dead weight and design pressure was limited to 10% of Ultimate Tensile Stress (UTS) of the cast iron valve material. Primary plus secondary stress in a DBE condition due to DBE inertia, DBE anchor movement, and other sustained loading was limited to 20% of UTS. This limit is consistent with an allowable stress limit of 20% provided in the SQUG Generic

Implementation Procedure (GIP), Revision 3 (reference 20) for an outlier resolution of cast iron valve bodies.

KPS believes that ensuring loading is limited to less than 35% of UTS is a reasonable acceptance criteria for justification of interim operability of cast iron valves identified in non-Class I/I* piping evaluated to maintain its pressure boundary during a DBE (for the purposes of identifying internal flooding sources). KPS also believes that ensuring loading is limited to less than 20% of UTS is a reasonable acceptance criterion for full qualification.

However, as a practical matter, KPS will implement a strategy of replacing cast iron valves identified in non-Class I/I* piping evaluated to maintain its pressure boundary during a DBE (for the purposes of identifying internal flooding sources). This strategy consists of documenting, evaluating interim operability, and targeting for replacement all such cast iron valves which may be identified in the future. Valve replacement will occur in a timeframe commensurate with the level of flooding risk posed by the valve.

iii. *For the non-Class I/I* piping evaluated to maintain its pressure boundary during a DBE, describe why the method of combining primary and secondary stresses are acceptable in cast iron valves.*

The limit on primary plus secondary stresses in DBE condition is consistent with limiting failure of brittle material with a safety factor of about 5 on UTS. However, in general the DBE inertia stress tends to be a smaller value in areas where DBE anchor movement stress is significant due to the restraining condition and vice-versa. As a result, the combined primary plus secondary stress normally does not increase significantly. Therefore, the analysis limit is considered reasonable and consistent with the SQUG GIP, Revision 3.

iv. *For the non-Class I/I* piping evaluated to maintain its pressure boundary during a DBE, describe the acceptance criteria for stress levels in cast iron valves as compared to the valve's ultimate tensile stress (UTS).*

Primary plus secondary stress due to DBE inertia, DBE anchor movement and other sustained loading is limited to 20% of UTS.

v. *For the non-Class I/I* piping evaluated to maintain its pressure boundary during a DBE, provide a justification for the allowed stress levels for cast iron valves.*

The level of primary plus secondary stress in the DBE condition calculated for cast iron valves is less than 20% of UTS. Thus, the predicted level of stress provides confidence

that the potential for pressure boundary failure of the cast iron valve is insignificant in DBE condition.

d. *Anchor Bolts:*

i. *For the non-Class I/I* piping evaluated to maintain its pressure boundary during a DBE, describe the value and the use of required safety factor for anchor bolts.*

When anchor bolts of unknown strength were identified, the capacity was estimated based upon SQUG criteria and a safety factor of 3.0 was used as recommended by SQUG. When anchors were identified with a vendor tested ultimate capacity, a safety factor of 2.0 was initially used in our evaluations as discussed in reference 4. This safety factor of 2.0 was based upon short-term operability criteria currently being used in the plant. Subsequently, all the anchor bolts were reviewed to determine if a safety factor of at least 3.0 was present. The review determined that a safety factor of at least 3.0 exists in all cases during DBE loading conditions.

ii. *For the non-Class I/I* piping evaluated to maintain its pressure boundary during a DBE, provide the justification for the safety factor for anchor bolts.*

A safety factor of 3.0 was selected based upon EPRI sponsored research documented in EPRI Technical Report TR-101968, Volume 3 (reference 13). Based on tests conducted by EPRI on many different kinds of anchor bolts, the technical report concluded that for a faulted loading condition, a safety factor of 2.0 can be used for wedge type anchors and 3.0 for shell type anchors. The technical report recommends a safety factor of 2.0 for short-term operability determinations. Therefore, it is considered conservative to use a safety factor of at least 3.0 for each anchor bolt in the evaluation of anchor bolts during DBE loading conditions.

e. *Buckling:*

For the non-Class I/I piping evaluated to maintain its pressure boundary during a DBE, describe how buckling was evaluated for pipe supports and hangers.*

Buckling in the pipe support components were accounted for in pipe support evaluations. Compressive stress in members is limited based upon kl/r ratio taking guidance from the AISC code. When stability is identified as a concern, the stress is limited to 2/3 of critical buckling stress for linear components and to 1/2 of the critical buckling stress for plate and shell type components.

Question 8

Circulating Water System

a. *If the circulating water system, or portions of it, was excluded as a flooding source, please describe the evaluation methodology and acceptance criteria.*

b. *Were any inspections of circulating water system conducted to determine if corrosion is an issue with the system? Describe the results of any inspections or evaluations.*

DEK Response

a. *If the circulating water system, or portions of it, was excluded as a flooding source, please describe the evaluation methodology and acceptance criteria.*

The Circulating Water (CW) system piping between the condenser and the turbine building basement floor (586 foot elevation) was excluded as a flooding source. The piping is clearly rigid in that it originates from the concrete floor beneath the building and is built into the concrete slab. On the inlet side of the condenser (Figure 8-1), four 72-inch diameter pipes extend approximately 4 feet above the floor to rubber inlet expansion joints, which connect to the condenser inlet waterboxes. On the outlet side of the condenser, four 72-inch diameter pipes extend approximately 1.7 feet from the floor to the rubber outlet expansion joints and approximately 2.75 feet from the expansion joints to the condenser outlet waterboxes. The expansion joints limit transfer of forces from the condenser to the CW piping. The inertial response of a 4-foot or a 2.75-foot, 72-inch diameter pipe is rigid and the stresses are negligible.

Inlet Piping

The CW inlet piping and the section of outlet piping from the outlet waterbox to outlet expansion joint were analyzed to determine if failure would occur during a seismic event. The analysis was documented in MPR Associates calculation 0064-0506-tkt-1, *"Circulating Water Condenser Inlet and Outlet Seismic Analysis,"* Revision 4.

The CW inlet piping was analyzed as a cantilever beam supported from the floor, and independent of the condenser. Each inlet pipe includes a 72-inch diameter butterfly valve between the piping and the expansion joints.

Outlet Piping

The exposed 72-inch diameter CW outlet piping which extends from the condenser waterbox outlet to an expansion flange was also analyzed in MPR Associates calculation 0064-0506-tkt-1. For this piping it was conservatively assumed that the

weight of the flange, mounting hardware, expansion joint, pipe, and water contained in the pipe is located at the end of the pipe nearest the floor (furthest from the condenser outlet). No valves are provided in the CW discharge flow path from the condenser. This piping was analyzed as a cantilever beam supported by the condenser outlet and independent of the floor. The CW inlet and outlet piping segments analyzed were shown to be seismically qualified.

Each 72-inch condenser outlet pipe that extends from the bottom of the outlet expansion joints to the turbine building basement floor is approximately 1.7-feet in length. This section of pipe was not independently analyzed, but is bounded by the condenser inlet piping analysis, which is for a longer section of pipe.

Figure 8-1

Circulating Water Inlet Piping to the Condenser

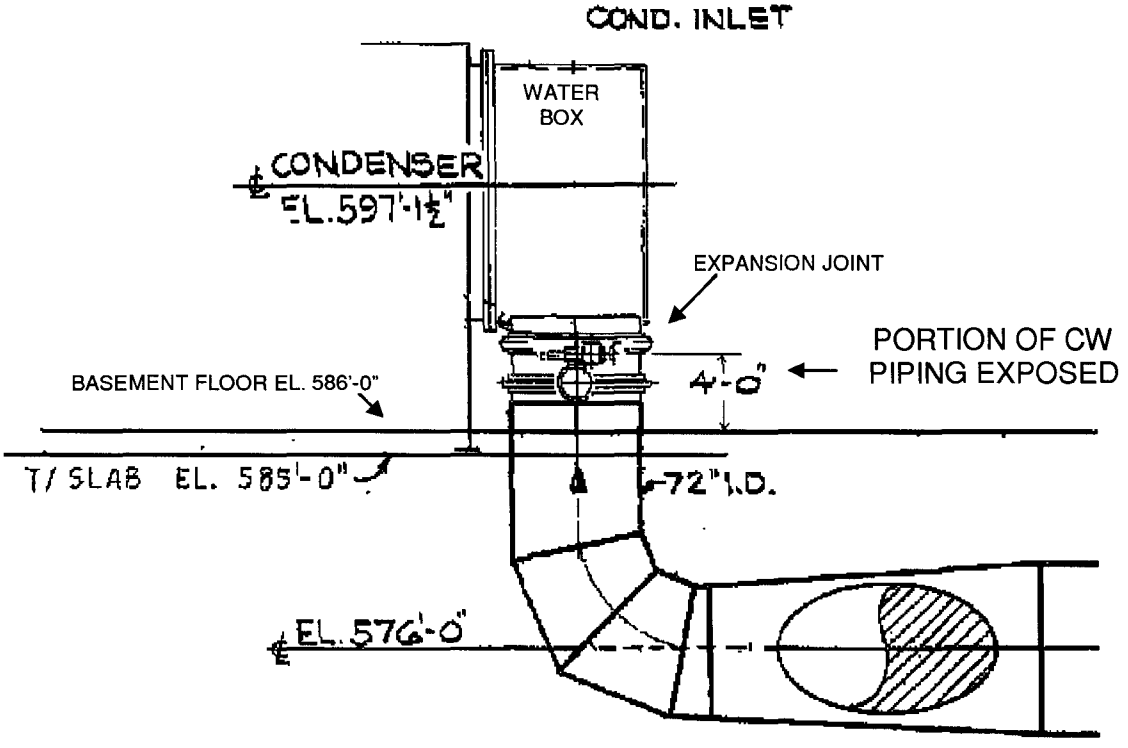

Buried Piping

Buried portions of the CW system piping directly beneath buildings were excluded as a flooding source. Beneath the turbine building basement floor slab, the buried portions of the inlet and outlet circular piping sections are continuously encased in a reinforced concrete monolith having a minimum 2-foot thickness at the springline. Downstream of the condenser, the four outlet pipes converge into a common rectangular discharge tunnel. The reinforced concrete tunnel roof slab is integral to the robustly constructed turbine building mat foundation, having a 5-foot nominal thickness and further overlaid by a 1-foot thick section of concrete floor slab. The remaining CW piping in the turbine building is also covered by the concrete mat that makes up the turbine building foundation. In these areas the mat has a nominal thickness of 4 feet, overlaid by a 1-foot thick section of concrete floor slab. Therefore, by engineering judgment, it was determined that flooding of the turbine building via a buried CW system leak was not a credible event.

A portion of the CW pump discharge piping is exposed in the screenhouse. The pumps and the exposed piping are in the CW pump bays which are in the lowest level of the screenhouse. A CW pipe break in this area would be a self-terminating flood source. The postulated break in this area would fill the pump bay and short out the pumps. The water would remain in the pump bay. No safety related equipment would be affected.

Evaluation Results

MPR Associates calculation 0064-0506-tkt-1 concluded the failure of the condenser CW inlet piping, or the condenser CW outlet piping as a result of a seismic event is not a credible design consideration for internal flooding scenarios. This conclusion is based on the following:

- The total lateral and axial deflections due to a DBE were calculated to be less than 2% and less than .02% of the lateral and axial movement limitations for a 72-inch expansion joint, respectively.
- The shear and bending stresses in the CW pipes due to operating stresses and the DBE were calculated to be less than 6% of allowable shear and less than 10% of allowable bending.
- The compressive stresses in the CW pipes due to operating stresses and the DBE were less than 4% of allowable.
- The shear stress in the welds of the condenser outlet pipes due to the operating stress and the Maximum Credible Earthquake were less than 30% of allowable.

b. *Were any inspections of circulating water system conducted to determine if corrosion is an issue with the system? Describe the results of any inspections or evaluations.*

Circulating Water (CW) system inspections are performed on an 18-month frequency using preventative maintenance procedure PMP-04-14, "Circulating Water Pump Suction Vault and Discharge Piping Zebra Mussel and Organic Macro Fouling Inspection (QA-2)." The inspection includes all accessible portions of the CW piping, from the CW pumps to the condenser inlet butterfly valves. Although the focus of the inspection is to identify zebra mussels and organic macro-fouling, inspection for degradation of welds and fasteners is also conducted.

An inspection sheet (Attachment A to the procedure) is used to document each inspection. Condition Reports are generated for any adverse conditions identified during the inspection. A review of inspection sheets completed between 1993 and 2006 did not identify any piping corrosion issues. It was noted on several of the inspection sheets that the piping appears to be in good condition. Pictures of the piping taken during the previous two inspections were reviewed. The CW piping appears to be in excellent condition. Zebra mussels were noted in low-flow and dead-leg areas.

References:

1. Letter from Leslie Hartz (DEK) to Document Control Desk, "License Amendment Request 215 – Modification of Internal Flooding Design Basis," dated March 17, 2006. (ADAMS Accession Nos. ML060760589).
2. Letter from E. S. Grecheck (DEK) to Document Control Desk, "Response to NRC Request for Additional Information Regarding License Amendment Request 215, Modification of Internal Flooding Design Basis," dated April 17, 2007. (ADAMS Accession No. ML071080206).
3. Letter from P. D. Milano to D. A. Christian (DEK), "Kewaunee Power Station – Request for Additional Information Related to Internal Flooding Design-Basis (TAC No. MD0511)," dated August 2, 2007.
4. Letter form G. T. Bischof (DEK) to Document Control Desk, "Response to Second NRC Request for Additional Information Regarding License Amendment Request 215, Modification of Internal Flooding Design Basis," dated September 17, 2007. (ADAMS Accession No. ML072640343).
5. Letter from G. F. Hrubesky (WPSC) to P. A. Morris AEC, "Amendment No. 4 to License Application," dated April 1, 1968.
6. Letter from P. A. Morris (AEC) to E. W. James (WPSC), dated September 23, 1971.

7. Letter from E. W. James (WPSC) to P. A. Morris (AEC), "Amendment No. 13 to the Application for Construction Permit and Operating License for the Kewaunee Nuclear Power Plant," dated December 15, 1971.

8. "Supplement No. 2 to the Safety Evaluation by the Directorate of Licensing U. S. Atomic Energy Commission in the Matter of Wisconsin Public Service Corporation, Wisconsin Power and Light Company and Madison Gas and Electric Company, Kewaunee Nuclear Plant, Kewaunee County, Wisconsin, Docket No. 50-305," dated May 10, 1973.

9. Letter from S. A. Varga (NRC) to D. C. Hintz (WPSC), dated September 6, 1985.

10. NUREG-1174, "Evaluation of Systems Interactions in Nuclear Power Plants, Technical Findings Related to Unresolved Safely Issue A-17," dated May 1, 1989.

11. Memorandum from E. M. Hackett (NRC) to M. A. Satorius (NRC), "Final Response to Task Interface Agreement 2005-10 Relating to Impact of Flooding on Residual Heat Removal (RHR) Pumps at Kewaunee Power Station (Task Interface Agreement (TIA) 2005-10) (TAC No. MC8937)," dated May 5, 2006.

12. Letter from E. W. James (WPSC) to R.C. DeYoung (NRC), "WPS Review of Non-Category I (Seismic Equipment)," dated October 31, 1972.

13. EPRI Technical Report TR-101968, Volume 3, Research Project 2967-02, "Guidelines and Criteria for Nuclear Piping and Support Evaluation and Design," May 1993.

14. EPRI NSAC-202L, "Recommendations for an Effective Flow-Accelerated Corrosion Program."

15. Generic Letter 89-13, "Service Water System Problems Affecting Safety Related Equipment," dated July 18, 1989.

16. EPRI NP-5617, "Recommended Piping Seismic Adequacy Criteria Based on Performance During and After Earthquake," EQE International, January 1988.

17. NUREG/CR-6239, "Survey of Strong Motion Earthquake Effects in Thermal Power Plants in California with Emphasis on Piping System," Stevenson & Associates, November 1995.

18. Stevenson & Associates, "Walkdown Procedure Used to Evaluate Operability of Seismic Class II or III Piping in Nuclear Plants," prepared for EPRI, December 1995.

19. EPRI Report, "Experienced Based Seismic Verification Guidelines for Piping Systems Volume I & II," Product ID 1012023, June 2005.

20. Seismic Qualification Utility Group, "Generic Implementation Procedure (GIP) for Seismic Qualification of Nuclear Plant Equipment," Revision 3, date May 1997.

ATTACHMENT 2

RESPONSE TO NRC QUESTIONS REGARDING LICENSE AMENDMENT REQUEST 215 "MODIFICATION OF INTERNAL FLOODING DESIGN BASIS"

PROPOSED REVISIONS TO MARKED-UP KEWAUNEE USAR PAGES INCLUDED IN LAR 215

NOTE:

The numbering of the attached USAR section may change when it is incorporated.

KEWAUNEE POWER STATION

DOMINION ENERGY KEWAUNEE, INC.

B.5 PROTECTION OF CLASS I ITEMS

The Class I items are protected against damage from:

a. Rupture of a pipe or tank resulting in serious flooding or excessive steam release to the extent that the Class I function is impaired.

b. Pipe whip and steam/water jets following a pipe rupture of an adjacent pipe.

c. Earthquake, by having the ability to sustain seismic accelerations adopted for purposes of plant design without loss of function. Protection from interaction with the surrounding buildings is accomplished by providing a separating joint of sufficient size for earthquake displacements. Unless the building is designed to Class I seismic design, an analysis is made to demonstrate that it will not collapse; otherwise, the systems are protected locally.

d. Tornado wind loads.

e. Other natural hazards. Examples of these hazards are seiche and ice.

f. Fire, in such a way that fire and operation of fire-fighting equipment does not cause damage to redundant parts of the system.

g. Missiles from different sources. These sources comprise:

   (i) Tornado created missiles.

   (ii) Missiles from components containing moving parts, which could be subjected to overspeed. (Potential sources for such missiles are turbines, turbine generators, and diesel engines, gas turbines).

   (iii) Missiles from high-pressure steam and feedwater piping. (These missiles are limited to non-back-seated valve stems and parts bolted to valves with bolts smaller than 3".)

For a High Energy Line Break (HELB) under item a and item b, no single event will cause failure of redundant circuits or Engineered Safety Feature components in a manner such that a single failure after the event could prevent the protective functions of the associated Engineered Safety Features.

No protection is required if the factors described under item a (non-HELB), item f, and item g cannot affect any Class I systems, or if redundant systems are provided and the physical separation of these systems is sufficient to prevent these factors from damaging both systems. Under item c and item d, redundancy and physical separation may decrease the requirements for protection. If redundancy and physical separation are not used, and if the surrounding building is not designed as a missile barrier, missile protection by shielding is necessary, either by shielding the source itself or by shielding the system.

B.11 INTERNAL FLOODING

B.11.1 GENERAL DISCUSSION

Internal flooding can occur as a result a rupture of a pipe or tank in a system containing or connected to a large volume of water. This section does not address flooding from other liquids such as chemicals or diesel fuel that are stored in tanks. In these cases, cubicles or dikes contain liquids due to failure of non-seismic components or spillage occurs remote from any safety-related equipment.

Internal flooding resulting from sources outside containment (other than natural phenomenon) was addressed in the original licensing process for Kewaunee. Amendment 17 to the FSAR addressed internal flooding from a postulated rupture in a service water line in the vicinity of the diesel generator rooms. Section 8.2.3.5 discusses the impact of this postulated rupture. The postulated rupture of a high-energy line (HELB) that also includes flooding consequences was addressed by FSAR Amendment Nos. 24, 27, and 28 that added Appendix 10A to the FSAR. Appendix 10A provided detailed design criteria and assessments of potential HELB events. Although the rupture of a service water pipe was addressed in the FSAR, the general criteria for the evaluation of internal flooding from a rupture of a pipe or tank was not captured in the FSAR.

In 2005, re-constitution of the design criteria for internal flooding was initiated in support of several internal flood protection modifications. When the operating license for Kewaunee was issued, the AEC was pursuing the issue of internal flooding for previously licensed plants. The AEC developed a set of guidelines for internal flooding protection. These guidelines were not sent to Kewaunee for consideration; however, the guidelines have been considered in the re-constitution of the internal flooding design criteria.

This section applies only to internal flooding resulting from the failure of a non-class 1 component that is below the criteria for high-energy systems. The HELB design criteria is addressed specifically in Section 10A.

B.11.2 FLOODING DESIGN CRITERIA

The plant must withstand the consequences of an internal flooding event in such a manner that it retains the capability to achieve and maintain the reactor in a safe shutdown condition. Toward this end, the design criteria for internal flooding evaluations are:

(a) Only non-Class I/I* pipe or tanks are considered to fail unless specifically evaluated to withstand the Design Basis Earthquake (DBE).

(b) Only failures in piping and branch runs exceeding 1 inch are considered.

(c) Pipe and tank failures assume the single most limiting failure in an area as determined by maximum flood level calculated in an area.

(d) Operator actions and design features are considered, but an additional single failure is not.

(e) Flooding is assumed coincident with the loss of offsite power if it increases the consequences of a flood.

(f) The effects of water spraying, dripping, or splashing on sensitive equipment are to be considered in the assessment of available equipment.

~~Safe shutdown following an internal flood is defined as hot shutdown. The reactor can be maintained in the hot shutdown condition for an extended period of time, if necessary, for cold shutdown equipment repairs.~~
Kewaunee was licensed as a hot shutdown plant, therefore, safe shutdown following an internal flood is hot shutdown. There is no specific time requirement for the reactor to achieve cold shutdown. However, sufficient equipment must be protected to begin the cooldown process and reduce RCS temperature to or below 350°F within 72 hours following an internal flooding event. The Safe Shutdown Equipment List for internal flooding is documented in Attachment 1 of Reference 34.

Some non-Class I/I* pipes have been excluded from consideration as a flood source based on evaluations to verify that the pipes have reasonable assurance to sustain the combined effects of a design basis earthquake and both pressure and deadweight loading without a loss of pressure boundary function. This assurance is obtained from experience based evaluations and/or by bounding evaluations. The criteria from ASME Section III Code for evaluation for level D loading or from ASME Section III Appendix F are used to establish reasonable assurance against leakage from a pressure boundary.

The failure of a pipe or tank is assumed as a result of DBE seismic loads. Only one pipe or tank component is assumed to fail. The failure is conservatively assumed to be the worst case (complete double-ended rupture) with respect to flooding potential in each area evaluated. The consequences of lesser breaks resulting in dripping or spray are also considered. Multiple pipe or tank failures are not considered in the analysis for a pipe or tank rupture because the potential interactions, such as pipe whip or jet impingement, are not applicable for lines that are not defined as high-energy lines. As discussed in Section 10A, high-energy lines would consider additional failures as a consequence of the initial rupture, if warranted. Multiple failures resulting from seismic loadings are also not considered as credible because of the robust design of non-Class I/I* piping. Specific evaluations of non-Class I/I* piping in the Class I portion of the Turbine Building basement (Safeguards Alley) and portions of the Auxiliary Building have demonstrated that the Class II and Class III piping in these areas are capable of withstanding the effects of a DBE without failure. The piping in these areas was installed to the same standards used throughout the station for Class II, III, and III* piping.

Operator actions and design features are considered in the evaluation of internal flooding consequences. The design features include level sensing devices to alert operators to take action, check valves to prevent backflow through pipes, barriers to protect safety-related equipment (including existing walls, doors, dikes, etc.), and circulating water pump trips to minimize flood sources. Operator actions in response to control room indications are the primary means of identification and termination of flooding sources.

Flooding evaluations assume a 30 minute period for identification and isolation of flooding sources with

the exception of a break in the Circulating Water expansion joints and the rupture of a 20" Service Water header in the Turbine Building. An expansion joint failure would be alarmed almost immediately in the Control Room. Low pressure in the SW header would cause alarms and valve re-alignment indications in the Control Room. If indications of excessive water in the Turbine Building are received, the Control Room operators are instructed by procedure to verify that the Circulating Water pumps have tripped and, if necessary, manually trip the pumps thus terminating an expansion joint failure flooding event. The Circulating Water pump trip would occur with either scenario. For abnormal Service Water indications in the Control Room, operators are instructed by procedure to dispatch personnel to identify the flood source and to close valves isolating Service Water in the Turbine Building. The CW pump trip circuitry is not credited in the evaluation of internal flooding resulting from an expansion joint failure or the Service Water header failure in the Turbine Building.

The two scenarios above have critical operator response times of less than 30 minutes. The operator~~Operator~~ response times for these manual actions -have been validated in the plant control room -simulator.

For flooding sources in the Turbine Building (other than the Circulating Water expansion joint or the 20" Service Water header) and sources in the Auxiliary Building, specific sump alarms would direct Control Room operators by procedure to dispatch operations personnel to identify and isolate any flooding sources. The significant, high-volume flood sources identified by plant walkdowns were evaluated by tabletop discussion and isolation of the source was judged to be achievable within the 30-minute period assumed in the flooding evaluations. The tabletop validations were based on information available in the control room to assist the deployment of operations personnel into the plant to identify flood sources. The validation effort did not consider the use of random searches to locate flooding sources.

Loss of offsite power (LOOP) is assumed unless the LOOP results in less limiting consequence. Design features that rely on electric power to operate (such as sump pumps) are only credited for flood protection if they are powered by site emergency power sources.

B.11.3 CLASS I EQUIPMENT PROTECTION

The criteria for Class I equipment protection is stated in Section B.5.a. It states that Class I items are protected against damage from the rupture of a pipe or tank resulting in serious flooding to the extent that the Class I function is impaired. Consistent with the AEC itemized flooding guidelines, the Class I functions required following the rupture of a pipe or tank which results in internal flooding are those functions necessary to achieve and maintain safe shutdown of the reactor. For internal flooding, safe shutdown is defined as the ability to bring the reactor to hot shutdown, cooldown to 350°F within 72 hours and, ultimately, achieve cold shutdown.- The ability to achieve and maintain safe shutdown demonstrates the effectiveness of the plant design and flood protection measures to protect necessary Class I equipment. The installed flood protection measures include drain line check valves, flooding barriers, level alarms, and a circulating water pump trip. These measures provide additional protection

to the original plant design against flood damage. The criteria for protection of Class I equipment has not changed, however, the means by which to comply with the criteria has become more effective.

~~The following guidelines specify the design considerations for evaluation and protection from internal flooding events based on the AEC guidelines for internal flooding available when Kewaunee was licensed. These guidelines were not formally docketed for Kewaunee and are not requirements. They do represent the regulatory position regarding internal flooding at the time when the Operating License was issued for Kewaunee.~~

~~Guideline - Separation for Redundancy: A single failure of non-Class I system components or pipes shall not result in loss of a system important to safety. Redundant safety equipment shall be separated and protected to assure operability in the event a non-Class I system or component fails.~~

~~Discussion - Redundancy of equipment (or alternate means for accomplishing the same shutdown function) is the basis utilized in the internal flooding evaluation for assessing safe shutdown capability when components identified in the safe shutdown list were compromised due to flooding.~~

~~Guideline - Access Doors and Alarms: Watertight barriers for protection from flooding of equipment important to safety shall have all access doors or hatches fitted with reliable switches and circuits that provide and alarm in the Control Room when the access is open.~~

~~Discussion - There are no watertight access doors or hatches associated with flooding barriers in-place for protection from internal flood events. Watertight doors installed for the purpose of protection from external flooding are not addressed by this guideline.~~

~~Guideline - Sealed Water Passages: Passages or piping and other penetrations through walls of a room containing equipment important to safety shall be sealed against water leakage from any postulated failure of non-Class I water systems. The seals shall be designed for the DBE, including seismically induced wave action or water inside the affected compartment during the DBE.~~

~~Discussion - Flooding evaluations utilize walk downs in each plant area to characterize flow paths in and out of each area, including penetrations. Qualification of penetration seals to the DBE was not considered, However, with the exception of the fire seals, specific flood protection features due to penetration seals was not credited. Penetrations with fire seals were considered as sealed against any significant leakage, in or out of the area.~~

~~Guideline - Class I Watertight Structures: Walls, doors, panels, or other compartment closure designed to protect equipment important to safety from damage due to flooding from non-Class I system rupture shall be designed for the DBE, including seismically induced wave action of water inside the affected compartment during the DBE.~~

~~Discussion - The watertight structures designed to protect equipment important to safety from the consequences of an internal flooding event are the flood barriers at doors #4, #6, #8, #11, #15, #16, and #401; and the blowout panel in the room for the TDAFW pump. Flood barriers were also installed at doors #12 and #13, but are associated with flooding from a HELB scenario. Each of these barriers was designed as Class I structures in order to withstand the effects of a DBE.~~

~~Guideline - Water Level Alarms and Trips: Rooms containing non-Class I system components and pipes whose rupture could result in flood damage to equipment important to safety shall have level alarms and pump trips (where necessary) that alarm in the Control Room and limit flooding to within the design flood volume. Redundancy of switches is required. Critical pump (i.e., high volume flow, such as condenser circulating water pumps) trip circuits should meet IEEE 279 criteria.~~

~~Discussion - The original plant design had a single non-safety level alarm in the Turbine Building sump which alarmed in the Control Room. Additional level indicators and Control Room alarms have been installed in the Turbine Building and, in general, comply with the requirements of IEEE 279. This guideline also has been implemented with respect to the Circulating Water pump trip circuits with a 2 of 3 Circulating Water pump trip logic using the installed level indicators.~~

~~Additionally, level switches are installed in various areas located in Safeguards Alley and the Auxiliary Building. These level indicator/alarms are considered as defense-in-depth components and are not specifically installed in accordance with the criteria of IEEE 279.~~

~~Guideline - Class I equipment should be located or protected such that rupture of a non-Class I system connected to a tower containing water or body of water (river, lake, etc.) will not result in failure of the equipment from flooding.~~

~~Discussion - This guideline applies to the Circulating Water and Service Water systems since both take their supply directly from Lake Michigan. The guideline, however, is basically a restatement of the design basis function of USAR B.5.a to protect Class I equipment that has a Class I function.~~

~~Guideline - The safety analysis shall consider simultaneous loss of offsite power with the rupture of a non-Class I system component of pipe.~~

~~Discussion - This guideline is specifically addressed by the design criteria in Section B11.2 (e).~~

The following criteria specify the design considerations for the protection of necessary Class I equipment from internal flooding events:

- Separation for Redundancy: A single failure of any postulated internal flooding source, as defined in B.11.2, shall not result in loss of a function important to the safe shutdown of the plant. Redundant equipment credited for maintaining a safe shutdown function shall be separated or protected to assure safe shutdown capability in the event of an internal flooding event.

- Access Doors and Alarms: Watertight barriers credited for protection from flooding of equipment important to the safe shutdown of the plant shall have all access doors or hatches fitted with reliable switches and circuits that provide an alarm in the Control Room when the access is open.

- Sealed Water Passages: Passages or piping and other penetrations through walls of a flood zone containing equipment requiring protection to assure to the safe shutdown of the plant shall be sealed against water leakage from any postulated internal flooding source, as defined in B.11.2. Credited seals shall maintain their integrity during a Design Basis Earthquake.

- Class I Watertight Structures: Walls, doors, panels, or other compartment closures credited to protect equipment important to the safe shutdown of the plant from damage due to flooding from any postulated internal flooding source, as defined in B.11.2, will maintain their integrity during a Design Basis Earthquake.

- Water Level Alarms and Trips: Plant areas containing a postulated internal flooding source, as defined in B.11.2 whose rupture could result in flood damage to equipment important to the safe shutdown of the plant shall have level alarms and pump trips (where necessary) that alarm in the Control Room. Redundancy of switches is required. Critical pump (i.e., high volume flow, such as condenser circulating water pumps) trip circuits should meet the IEEE 279 criteria to the extent practical.

These flooding ~~guidelines~~ criteria do not specify that flood protection equipment is to be safety related. Flood protection equipment is not intended to mitigate any aspect of a design basis accident. Therefore, consistent with the Kewaunee quality classification criteria, such equipment does not meet the criteria to be classified as safety related.

B.11.4 CONCLUSION

The ability to cope with internal flooding from the rupture of a pipe or tank is determined per the criteria provided in sections B.11.2 and B.11.3 above. Equipment required for the safe shutdown of the reactor must be protected from the flood consequences consistent with Section B.5.a.

REFERENCES - APPENDIX B

1. Morris, Hansen, Holley, Biggs, Namyet, and Minami, "Structural Design for Dynamic Loads", McGraw-Hill Co., Inc., New York, 1959

2. RA Wiesemann, RE Tome, R. Salvatori, "Ultimate Strength Criteria to Ensure No Loss of Function of Piping and Vessels Under Earthquake Loading", WCAP 5890 Rev 1, October 1967.

3. George W. Housner, "Vibration of Structures Induced by Seismic Waves", Shock and Vibration Handbook, Volume III, McGraw-Hill, Inc., New York, 1961

4. E. L. Vogeding, "Topical Report, Seismic Testing of Electrical and Control Equipment", WCAP 7817, December 1971

5. "Report Covering the Effects of a High Pressure Turbine Rotor Fracture and Low Pressure Turbine Disc Fractures at Design Overspeed", Westinghouse LTD, Report B, E & M.

6. RC Gwaltney, "Missile Generation and Protection in Light-Water-Cooled Power Reactor Plants", ORNL-NSIC-22, September 1968.

7. J. N. Fox, "Likelihood and Consequences of Turbine Overspeed at the Point Beach Nuclear Plant", WCAP 7525, August 1970

8. John A. Blume & Associates, Engineers, "Kewaunee Nuclear Power Plant-Earthquake Analysis of the Reactor-Auxiliary-Turbine Building, JAB-PS-01, February 16, 1971" (submitted as part of Amendment No. 9 to this license application)

9. John A. Blume & Associates, Engineers, "Kewaunee Nuclear Power Plant-Earthquake Analysis: Reactor-Auxiliary-Turbine Building Response Acceleration Spectra", JAB-PS-03, February 16, 1971 (submitted as Amendment No. 9 to this license application)

10. "Methodology for Calculating the Probability of a Missile Generation from Rupture of a Low Pressure Turbine Disc" - Revision 1, dated July 1980, Westinghouse

11. "Results of Probability Analyses of Disc Rupture and Missile Generation"-Revision 0, dated August 1980, Westinghouse

12. "WPS Kewaunee Missile Probabilities/Probability of Disc Rupture and Missile Generation Due to Stress Corrosion" - Letter to DC Hintz from Philip E. Mescher dated August 9, 1982 (Letter #PM-229-82)

13. NRC Safety Evaluation Report - Letter to ER Mathews from SA Varga dated October 26, 1981 (K-81-174)

REFERENCES – APPENDIX B (cont'd)

14. Supplement No. 1 to Generic Letter (GL) 87-02 which transmits Supplemental Safety Evaluation Report No. 2 (SSER No. 2) on SQUG Generic Implementation Procedure, Revision 2 as corrected on February 14, 1992 (GIP-2), dated May 22, 1992

15. Letter from H. L. Thompson (NRC) to Licensees, Letter No. K-85-132 dated June 28, 1985

16. NRC SER, SA Varga (NRC) to CW Giesler (WPS), Letter No. K-84-61 dated March 16, 1984

17. Letter from C. R. Steinhardt (WPSC) to the NRC Document Control Desk, dated September 17, 1992

18. Letter from C. R. Steinhardt (WPSC) to the NRC Document Control Desk, dated February 18, 1993

19. Seismic Qualification Utility Group (SQUG), "Generic Implementation Procedure (GIP) for Seismic Verification of Nuclear Power Plant Equipment", Revision 2 as corrected February 14, 1992

20. Letter from C. R. Steinhardt (WPSC) to the NRC Document Control Desk, Letter No. NRC-89-56, dated May 05, 1989, "Criteria for Determining Continued Operability of Safety Related Piping Systems"

21. Letter from C. R. Steinhardt (WPSC) to the NRC Document Control Desk, Letter No. NRC-96-016, dated February 13, 1996, "Response to Generic Letter 95-07"

22. Letter from C. R. Steinhardt (WPSC) to the NRC Document Control Desk, Letter No. NRC-96-071 dated July 18, 1996, "Response to Request for Additional Information - Generic Letter 95-07"

23. NRC Safety Evaluation Report of Licensee Response to Generic Letter 95-07, A Pressure Locking and Thermal Binding of Safety-Related Power-Operated Gate Valves", Letter to ML Marchi (WPSC) from R. J. Laufer (NRC), dated January 13, 1998 (K-98-008)

24. Letter from WO Long (NRC) to ML Marchi (WPSC), "Kewaunee Nuclear Power Plant-Safety Evaluation Report for USI A-46 Program Implementation", Letter No. K-98-47, dated April 14, 1998

25. Seismic Qualification Utility Group (SQUG), "Generic Implementation Procedure (GIP) for Seismic Verification of Nuclear Power Plant Equipment", Revision 3, May 16, 1997

26. Supplemental Safety Evaluation Report No. 3 (SSER No. 3) on the Review of Revision 3 to the Generic Implementation Procedure for Seismic Verification of Nuclear Power Plant Equipment updated May 16, 1977, (GIP-3), (TAC No. M93624)

REFERENCES – APPENDIX B (cont'd)

27. FSAR Amendment 17 dated May 12, 1972 from E. W. James (WPS) to P. A. Morris (AEC).

28. FSAR Amendment 24 dated January 24, 1973 from E. W. James (WPS) to J. F. O'Leary (AEC).

29. FSAR Amendment 27 dated March 16, 1973 from E. W. James (WPS) to J. F. O'Leary (AEC).

30. FSAR Amendment 28 dated April 13, 1973 from E. W. James (WPS) to J. F. O'Leary (AEC).

31. "Safety Evaluation of Kewaunee Nuclear Power Plant, Supplement 2" dated July 24, 1972.

32. NUREG-0800, Standard Review Plan for the Review of Safety Analysis Reports for Nuclear Power Reactors (LWR Edition) dated July 1981.

33. Letter October 31, 1972 to R. C. DeYoung (NRC) from E. W. James (WPS).

34. Calculation X10072, "Safe Shutdown Assessment of Internal Flooding levels Due to Postulated Pipe or Tank Rupture."