QA Record THIS SHEET ADDED BY REV. 1

Sheet 1A

TVA 10697 (DNE-6-86)

DNE CALCULATIONS

TITLE CALCULATION FOR CABLE TRAY SUPPORT No. 1-CTSP-293-158 (DET. M5)	PLANT/UNIT WBNP/UNIT 1
PREPARING ORGANIZATION NE-EBASCO	KEY NOUNS (Consult RIMS DESCRIPTORS LIST) SUPPORTS, HANGERS, CABLE TRAYS
BRANCH/PROJECT IDENTIFIERS WCG-1-640	Each time these calculations are issued, preparers must ensure that the original (RO) RIMS accession number is filled in.
APPLICABLE DESIGN DOCUMENT(S) WB-DC-20-21.1	
SAR SECTION(S) NA / UNID SYSTEM(S) NA	

Rev	(for RIMS' use)	RIMS accession number
RO ~~RO~~ ~~RA~~ R4 7/13/92	9101290B0001	B1891010225 2
R4	JUL 27 1992 (94)	B18 '92 0714 319
R —		
R —		

Revision 0	~~RT~~ R4	R2	R3
ECN No. (or indicate Not Applicable) NA	NR		
Prepared *	T. BENKERT J. Benkert		
Checked *	B KNOBLOCH		
Reviewed *	A. NETIN		
Approved *	M. McGood		
Date 1-2-1991	7/13/92		
List all pages added by this revision.	See Rev. Log sht.		
List all pages deleted by this revision.	" " " "		
List all pages changed by this revision.	" " " "		

Use form TVA 10534 if more space required.

Safety-related? Yes ☒ No ☐

Statement of Problem

THIS CALCULATION BOUNDS THE WORST CASE CONDITION OF SUPPORT DET. M5 AND WILL BE USED TO QUALIFY THOSE SUPPORTS.

ORIGINAL

Abstract * REFER TO SHEET 1 FOR REVISION 0 SIGNATURES

These calculations contain an unverified assumption(s) that must be verified later. Yes ☐ No ☒

R4 THIS REVISION TO THE CALCULATION IS TO CORRECT ERRONEOUS REFERENCE LEVELS, AND MISSING REFERENCES, IN THE PREVIOUS REVISION OF THE CALC. THIS CORRECTION DOES NOT IMPACT THE RESULTS OF THE CALCULATION.

TB 6/24/92

9305280303 930522
PDR ADOCK 05000390
A PDR

☐ Microfilm and store calculations in RIMS Service Center. Microfilm and destroy. ☐ CEB

☒ Microfilm and return calculations to: CALCULATIONS LIBRARY Address: WALTON BLDG.

cc: RIMS, SL 26 C-K

TVA 10697 (DNE-6-86) **QA Record** DNE CALCULATIONS

 PSP 7/3/91

TITLE CALCULATION FOR CABLE TRAY SUPPORT No. 1-CTSP-293-158 (DET. M5)	PLANT/UNIT WBNP/UNIT-1
PREPARING ORGANIZATION NE-EBASCO	KEY NOUNS (Consult RIMS DESCRIPTORS LIST) SUPPORTS, HANGERS, CABLE TRAYS
BRANCH/PROJECT IDENTIFIERS ~~1 CTSP 293 158~~ WCG-1-640 1/9/91 ~~01/29/90~~	Each time these calculations are issued, preparers must ensure that the original (RO) RIMS accession number is filled in.

Rev	(for RIMS' use)	RIMS accession number
R0	910129B0001	B18 910102 252
R1	910425C0011 (24)	B18 910118 255
R2	910903B0003 (77)	B18 910719 255 (77)
R3	911025A0011 (92)	B18 910930 281

APPLICABLE DESIGN DOCUMENT(S): WB-DC-20-21.1

SAR SECTION(S): NA — UNID SYSTEM(S): NA

Revision 0	R1	R2	R3
ECN No. (or indicate Not Applicable) NA	NR	NR	NR
Prepared G. GHALY	G. GHALY	G. GHALY	PS PATEL
Checked / verified A. Tehranian	U. BHADRA	P S PATEL	RBDESAI
Reviewed	M. KAMBLE	M. KAMBLE	P. TRIVEDI
Approved		C Y CHICU	
Date 1-2-1991	1-16-91	7-19-91	9/28/91
List all pages added by this revision.	*	*	SEE ~~LOG~~ REV LOG SHEET 9/28/91
List all pages deleted by this revision.	*	*	
List all pages changed by this revision.	*	*	

Use for 10534 space required.

Safety-related? Yes ☒ No ☐

Statement of Problem

THIS CALCULATION BOUNDS THE WORST CASE CONDITION OF SUPPORT DET. M5 AND WILL BE USED TO QUALIFY THOSE SUPPORTS.

ORIGINAL

Abstract

These calculations contain an unverified assumption(s) that must be verified later. Yes ☐ No ☒

THIS CALCULATION SHOWS THE CABLE TRAY SUPPORTS ARE STRUCTURALLY ADEQUATE AND MEET ALL THE APPLICABLE DESIGN CRITERIA.

REV 02 THIS CALCULATION SUPERSEDES CALC # WCG-1-640 REV 0 & REV 01 IN ITS ENTIRETY (B18910102 252 REV0) (B18910118 255 REV01)

REV 03 THIS CALCULATION QUALIFIES SUPPORTS USING REVISED TRAY FREQUENCY & 'G' VALUES.

ADIC 9/28/91

* REFER TO SHEET 2

CEB

☐ Microfilm and store calculations in RIMS Service Center. Microfilm and destroy. ☐

☒ Microfilm and return calculations to: Calculations Library Address: WBN N. QA BLDG.

cc: RIMS, SL 26 C-K Debbie Kilgore WBN Trailer No. ~~E-7~~ E-7 9/4/91

WCG-1-640 REV. 1

BRANCH/PROJECT ID: ~~1-CTSP-293-158~~ 98 1/9/91 | SHEET 2 OF ~~19~~ 20 PSP 7/3/91

TVA

MB 1/16/91

REVISION LOG

Title: CALCULATION FOR CABLE TRAY SUPPORT #1-CTSP-293-158 DET. MS

Revision No.	DESCRIPTION OF REVISION	Date Approved
0	ORIGINAL ISSUE	1-2-1991
1	CHANGED BRANCH/PROJECT ID. ON SHEETS 1, 2, 4 THRU 19, TABLE OF CONTENTS OF ATTACHMENT AND ATTACHMENT B REVISED SHEET 4 & TABLE OF CONTENTS OF ATTACHMENT. ADDED SHEET 3A & ATTACHMENT A SHEET 1A	1-16-1991
2	THIS CALCULATION SUPERSEDES REV 0 & REV 01 OF THIS CALC ENTIRELY. {CALC # WCG-1-640 REV 0 B18 910102 252 REV 01 B18 910118 255} ADDED SHEETS: 3, 4 THRU 20 & 3, ATTACH A, B, C & D.	7-19-91
3	ADDED SHEETS: 3, 12a THRU 18a, 18B, 19a, 20a ATTACH. A SH 1 ATTACH B SH 21a, 22a, ~~22A~~ PSD 9/26/91 ATTACH E SH 1, 2 9/26/91 REVISED SHEETS: 1, 2, 3A, 3B, 3C, 4, 6, 7, 8, 9, 10 & 11 TABLE OF CONTENTS. ATTACH. A SH. 2 ATTACH B SH. 25 SUPERSEDED SHEETS: 12 TH 20, ATTACH B, 21 & 22	9/28/91
4	ADK 4/11/92 ~~ADD~~ PAGES ADDED: ADK 4-11-92 1A, 3D PAGES REVISED: 6, 11, 5, 4 PAGES DELETED: NONE REV 4 BY T.B. DATE 6/24/92 CHK. ADK DATE 7/9/92	ADK 7/13/92
		TB

TVA 10534 (EN DES-4-78)

CALCULATION DESIGN VERIFICATION (INDEPENDENT REVIEW) FORM

WCG-1-640 — BRANCH/PROJECT ID/Calculation No.

03 — Revision

Method of design verification (independent review) used (check method used):

1. Design Review	X
2. Alternate Calculation	NR
3. Qualification Test	NR

Justification (explain below):

Method 1: In the design review method, justify the technical adequacy of the calculation and explain how the adequacy was verified (calculation is similar to another, based on accepted handbook methods, appropriate sensitivity studies included for confidence, etc.).

Method 2: In the alternate calculation method, identify the pages where the alternate calculation has been included in the calculation package and explain why this method is adequate.

Method 3: In the qualification test method, identify the QA documented source(s) where testing adequately demonstrates the adequacy of this calculation and explain.

DESIGN REVIEW IS APPLICABLE TO THIS CALCULATION, SINCE IT IS BASED ON STANDARD ENGINEERING HANDBOOK METHODS.

9/27/91

THIS SHEET ADDED BY REV. 03

Design Verifier (Independent Reviewer)

9/27/91
Date

REV. 03
CALC. BY PSPatel 8/25/91
CHECKED BY [illegible] 9/26/91

R3 | SHEET 3A OF 20

CALCULATION DESIGN VERIFICATION (INDEPENDENT REVIEW) FORM

WCG-1-640 — BRANCH/PROJECT ID/Calculation No.

02 — Revision

Method of design verification (independent review) used (check method used):

1. Design Review	X
2. Alternate Calculation	NR
3. Qualification Test	NR

Justification (explain below):

Method 1: In the design review method, justify the technical adequacy of the calculation and explain how the adequacy was verified (calculation is similar to another, based on accepted handbook methods, appropriate sensitivity studies included for confidence, etc.).

Method 2: In the alternate calculation method, identify the pages where the alternate calculation has been included in the calculation package and explain why this method is adequate.

Method 3: In the qualification test method, identify the QA documented source(s) where testing adequately demonstrates the adequacy of this calculation and explain.

DESIGN REVIEW IS APPLICABLE TO THIS CALCULATION, SINCE IT IS BASED ON STANDARD ENGINEERING HANDBOOK METHODS.

PSP 7/3/91

PSPATEL / PSPatel — Design Verifier (Independent Reviewer)

7/3/91 — Date

THIS SHEET ADDED BY REV. 02

CALCULATION DESIGN VERIFICATION (INDEPENDENT REVIEW) FORM

WCG-1-640 — 1

BRANCH/PROJECT ID/Calculation No. — Revision

Method of design verification (independent review) used (check method used):

1. Design Review — X
2. Alternate Calculation —
3. Qualification Test —

Justification (explain below):

Method 1: In the design review method, justify the technical adequacy of the calculation and explain how the adequacy was verified (calculation is similar to another, based on accepted handbook methods, appropriate sensitivity studies included for confidence, etc.).

Method 2: In the alternate calculation method, identify the pages where the alternate calculation has been included in the calculation package and explain why this method is adequate.

Method 3: In the qualification test method, identify the QA documented source(s) where testing adequately demonstrates the adequacy of this calculation and explain.

DESIGN REVIEW IS APPLICABLE TO THIS CALCULATION, SINCE IT IS BASED ON STANDARD ENGINEERING HANDBOOK METHODS.

Mdayan K. Bhadra — 1/16/91

Design Verifier (Independent Reviewer) — Date

THIS SHEET ADDED BY REV. 1

REV. 03
CALC. BY PSPatel 9/25/91
CHECKED BY [illegible] 9/27/91

SHEET ~~3 OF 19~~
R3 | ~~3B~~ ~~3A~~ OF 20
3C PSP 7/3/91
9/24/91

CALCULATION DESIGN VERIFICATION (INDEPENDENT REVIEW) FORM

1 CTSP 293158 — BRANCH/PROJECT ID/Calculation No.

0 — Revision

Method of design verification (independent review) used (check method used):

1. Design Review — X
2. Alternate Calculation
3. Qualification Test

Justification (explain below):

Method 1: In the design review method, justify the technical adequacy of the calculation and explain how the adequacy was verified (calculation is similar to another, based on accepted handbook methods, appropriate sensitivity studies included for confidence, etc.).

Method 2: In the alternate calculation method, identify the pages where the alternate calculation has been included in the calculation package and explain why this method is adequate.

Method 3: In the qualification test method, identify the QA documented source(s) where testing adequately demonstrates the adequacy of this calculation and explain.

DESIGN REVIEW IS APPLICABLE TO THIS CALCULATION, SINCE IT IS BASED ON STANDARD ENGINEERING HANDBOOK METHODS.

[signature] — Design Verifier (Independent Reviewer)

12/20/90 — Date

THIS SHEET ADDED BY REV. 4

CALCULATION DESIGN VERIFICATION (INDEPENDENT REVIEW) FORM

WCG-1-640 — BRANCH/PROJECT ID/CALCULATION NO.

4 — REVISION

Method of design verification (independent review) used (check method used):

1. Design Review	X
2. Alternate Calculation	NR
3. Qualification Test	NR

Justification (explain below):

Method 1: In the design review method, justify the technical adequacy of the calculation and explain how the adequacy was verified (calculation is similar to another, based on accepted handbook methods, appropriate sensitivity studies included for confidence, ect.).

Method 2: In the alternate calculation method, identify the pages where the alternate calculation has been included in the calculation package and explain why this method is adequate.

Method 3: In the qualification test method, identify the QA documented source(s) where testing adequately demonstrates the adequacy of this calculation and explain.

DESIGN REVIEW IS APPLICABLE TO THIS CALCULATION, SINCE IT IS BASED ON STANDARD ENGINEERING HANDBOOK METHODS.

7/9/92

Design Verifier (Independent Reviewer) — Date: 7/9/92

EBASCO SERVICES INCORPORATED

SHEET 4 OF ~~19~~ 20 | R2

BRANCH/PROJECT ID: ~~1 CTSP 293 158~~ WCG-1-640 | REV. 1

BY: G. Gurley DATE: 11/9/90 DEPT NO.: NA

CHECKED BY: A. Thrasian DATE: 12-4-90 OFS NO.: NA

CLIENT: TVA

PROJECT: WBNP/UNIT - 1

SUBJECT: CALCULATION FOR CABLE TRAY SUPPORT #1 - CTSP-293-158 (DET. M5)

REV. 03

CALC. BY PSPowell 9/23/91

CHECKED BY 9/26/91

TABLE OF CONTENTS

SECT. NO.	DESCRIPTION	PAGE NO.	NO. OF PAGES
1	COVER SHEET	1	~~1~~ 2 | R4
2	REVISION LOG	2	1
3	CALC DESIGN VERIFICATION (INDEPENDENT REVIEW) FORM R2	3, 3A, 3B, 3C	~~1~~ ~~2~~ ~~4~~ 5 | REV. 1
4	TABLE OF CONTENTS 9/26/91	4	1
5	PURPOSE	5	1
6	CRITERIA	5	-
7	APPLICABLE CODES AND STANDARDS	5	-
8	ASSUMPTIONS, LITERATURE SEARCHES AND OTHER APPLICABLE DATA	6	1
9	REFERENCES	6	-
10	DESIGN INPUT DATA	6	-
11	CALCULATIONS 7a thru 18a, 18b, 19a +	7 thru ~~15~~ 19	~~12~~ 27
12	SUMMARY OF CALCULATION RESULTS	20a, ~~19~~ 20	1
13	CONCLUSION	~~19~~ 20	—
14	ATTACHMENTS	40	~~4~~ ~~5~~
	SUPERSEDED PAGES:	14	—
	TOTAL PAGES	~~92~~ 94	~~24~~ ~~22~~

REV 4 BY T.B. DATE 6/24/92 CHK. MC DATE 7/9/92

THIS CALCULATION PACKAGE CONTAINS ~~24~~ ~~94~~ ~~22~~ TOTAL PAGES.

R2 9/26/91

REV. 1 99 1/9/91 UB 1/16/91

R4

EBASCO SERVICES INCORPORATED
BRANCH/PROJECT ID.: WCG-1-640

BY [illegible] DATE 6/24/91
CHKD. BY [illegible] DATE 7/3/91
OFS NO. NR
DEPT. NO. NR
CLIENT TVA
PROJECT WBNP - Unit-1
SUBJECT CALCULATION FOR CABLE TRAY SUPPORT No. 1-CTSP-293-15B (DET. M5)

5. PURPOSE:

TO QUALIFY CABLE TRAY SUPPORTS MARKED AS DET. M5 FOR CRITICAL CASE.

6. APPLICABLE CRITERIA (MARKED "X"):

NR 1. DS-C1.7.1 R4 General Anchorage to Concrete
NR 2. WB-DC-20-21 R6 Misc. Steel Component for Category I Structures
NR 3. WB-DC-20-1.1 R8 Add. Diesel Gen. Bldg. & New Cat. I Structures
X 4. WB-DC-20-21.1 R6 Category I Cable Tray Supports
NR 5. WB-DC-40-31.8 R6 Seismically Qualifying Round and Rectangular Ducts
NR 6. WB-DC-40-31.9 R10 Pipe Support and Supplementary Steel Design Criteria
NR 7. WB-DC-40-31.10 R4 Seismically Qualifying Conduit Supports
X 8. QIR-CEB-WBN-89-361 R0 Auxiliary-Control and Reactor Buildings - Acceleration & Response Spectra
NR
X ~~NR~~ 9. WCG-1-370 R0 Generation of OBE 4% Damping ARS for Unit 1 ICS, SCV, and SB | R4
NR 10. WCG-1-377 R0 Auxiliary Control Building 4% Damping Curves and Seismic Forces
NR 11. DS-C1.6.9 R0 Design of Clamp and Channel/Strut Components for Conduit
NR 12. DS-C1.6.14 R0 Design of Unistrut & B-Line Clamps for Piping and Tubing
X 13. (Specify): CEB REPORTS No. CEB-WBN-85-50-C REV. 1

REV	BY T.B. DATE 6/24/92
4	CHK. [illegible] DATE 7/9/92

7. APPLICABLE CODES AND STANDARDS (MARKED "X"):

X 1. AISC Manual of Steel Construction, 7th Edition
NR 2. AISC Manual of Steel Construction, 8th Edition
3. ASTM
4. ANSI/AWS D.1.1-83, 1983, Structural Welding Code - Steel
5. ANSI B31.1
6. ACI 318-77 Building Code Requirements for Reinforced Concrete
NR 7. (Specify):

THIS SHEET ADDED BY REV. 02

EBASCO SERVICES INCORPORATED
BRANCH/PROJECT ID.: WCG-1-640

SHEET 6 OF 20

DEPT. NO. NR

OFS NO. NR

DATE 6/24/91

D. BY PSPatel DATE 7/3/91

CLIENT TVA

PROJECT WBNP - Unit-1

SUBJECT CALCULATION FOR CABLE TRAY SUPPORT NO. 1-CTSP-293-158 (DET. M5)

8. ASSUMPTIONS, LITERATURE SEARCHES AND OTHER APPLICABLE BACKGROUND DATA:

NONE

REV. 03
CALC. BY PSPatel 9/23/91
CHECKED BY [illegible] 9/26/91

9. APPLICABLE REFERENCES (MARKED "X"):

X 1. Design of welded structures by O.W. Blodgett 1966
R3 X ~~NR~~ 2. Formulas for stress and strain by R.J. Roark & W.C. Young, 5th Edition
3. Unistrut Catalog No.: 11 1988
4. Bergen Paterson Catalog No.:
5. Structural Drawing No.:
NR 6. WBNP-PSDM (Watts Bar Nuclear Plant Pipe Support Design Manual) Vol. 1 Rev.2
X 7. AISC Manual of Steel Construction, 8th Edition
X 8. (Specify): "FORMULAS FOR NATURAL FREQUENCIES AND MODE SHAPES" BY R.D. BELVINS, 1979 EDITION
X 9. "VIBRATION THEORY & APPLICATIONS" BY THOMSON 1965 EDITION.
X 10. CALCULATION WCG-1-642, R/2. CALCULATION FOR CABLE TRAY SUPPORT # 1-CTSP-293-282.
X 11. WALKTHROUGH PACKAGE No. CT-SB-H-060 | R4

REV	BY T.B.	DATE 6/24/92
4	CHK. [illegible]	DATE 7/9/92

10. APPLICABLE DESIGN INPUT DATA:

A. ~~TRAY PLAN~~ IDENTIFICATION FOR CABLE TRAY DWG. No. 108W10504-10 (REV.1) & 108W10504-2 (REV.2)
B. DWG. No. 48W970-5 (REV. 11) & 48W970-4 (REV. ~~4~~) 6 | R3
C) ENVIRONMENTAL DATA DWG. No. 47E235-44 (REV. ~~1~~ 2 | R4
E) CALC. # WCG-1-409 (REV.0)

THIS SHEET ADDED BY REV. 02

EBASCO SERVICES INCORPORATED

BY G. Gurley DATE 6/24/91 BRANCH/PROJECT ID: WCG-1-640 SHEET 7 OF 20

CHKD. BY PSPatel DATE 7/3/91 OFS NO. NR DEPT. NO. NR

CLIENT TVA

PROJECT WBNP / UNIT-1

SUBJECT CALCULATION FOR CABLE TRAY SUPPORT No. 1-CTSP-293-15B (DET. M5)

REV. 03

CALC. BY PSPatel 9/24/91

CHECKED BY RGlu 9/26/91

11) CALCULATION

	INDEX	SHEET NO.
11.1	OBJECTIVE	8
11.2	SUPPORT SKETCH	9
11.3	DEAD LOAD (D)	10
11.4	LIVE LOAD (L)	10
11.5	THERMAL LOADS	11
11.6	SYSTEM FREQUENCY	12
11.7	SEISMIC DESIGN 'G' VALUES	13
11.8	DESIGN LOADS	14
11.9	LOADING COMBINATIONS	15
11.10	QUALIFICATION OF L 6 X 3 1/2 X 3/8	16,17
11.11	WELD QUALIFICATION	18, ~~19~~ 18A & 19
11.12	QUALIFICATION OF TRAY CLIP BOLTS	~~20~~ 19

R3 R3

THIS SHEET ADDED BY REV. 02

EBASCO SERVICES INCORPORATED

BY G.G.Ly DATE 6/24/91 BRANCH/PROJECT ID: WCG-1-640 SHEET 8 OF 20

CHKD. BY BPatel DATE 7/3/91 OFS NO. NR DEPT. NO. NR

CLIENT TVA

PROJECT WBNP/UNIT-1

SUBJECT CALCULATION FOR CABLE TRAY SUPPORT NO. 1-CTSP-293-158 (DET. M5)

REV. 03

CALC. BY PSPatel 9/23/91

CHECKED BY [illegible] 9/26/91

11.1) OBJECTIVE

THE OBJECTIVE OF THIS CALCULATION IS TO DEMONSTRATE THE STRUCTURAL ADEQUACY OF THE BOUNDING CASE FOR THE TYPICAL CABLE TRAY SUPPORTS (DETAIL M5) ATTACHED TO THE STEEL CONTAINMENT VESSEL AND STIFFENER PLATES.
BY REVIEWING THE WALKTHROUGH DATA(CONFIRMED BY WALKDOWN ATTA B) THE FOLLOWING BOUNDING ATTRIBUTES ,THAT PRODUCE MAX. STRESSES, WILL BE CONSIDERED IN THE DESIGN:

R3

1) MIN WELD PROPERTIES: FILLET ~~0.0625~~ .125 " ~~*~~ lg= 2.25
2) TRAY LOCATION(ELEVATION & AZIMUTH) TO PRODUCE MAX 'G' VALUES
3) MAX AS-BUILT TRAY SPAN = 5.5 ft
4) LARGEST CABLE TRAY SIZE = 4"x18"

REF
108W10504-10 REV 1
108W10504-2 REV 3

CALCULATION NO WCG-1-409 REV.0 (OVERWEIGHT CABLE TRAY DATA) WILL BE REVIEWED TO DETERMINE TRAY OVERWEIGHT.
SUPPORT NO. 1-CTSP-293-0158, ATTACHED TO HORIZONTAL STIFFENER AND CONSISTS OF TWO L 6 X 3 1/2 X 3/8 AT TRAY ELEV. 773.25', WILL BE USED AS CRITICAL CASE FOR QUALIFICATION OF SUPPORTS IN THIS GROUP.

THE EVALUATION PROCESS WILL FOLLOW STEPS IN ATTACHMENT C.

SUPPORT 1-CTSP-293-0541
PI WELDS BETWEEN CLIP L & STIFFENER ARE CONSIDERED AS MIN 1/8" FILLET WELD 2 3/4 LONG, 4" APART

REF
ATT B
SH 22 OF 25

* SINCE WELD FOR SUPPORT 1-CTSP-292-539 IS INACCESSABLE, CONSIDER IT AS ~~1/16"~~. 1/8" FILLET WELD 2 1/2" LG

THE FOLLOWING SUPPORTS ARE TYPICAL DETAIL M5 BOUNDED BY CALC 1-CTSP-293-158 (DET. M5)

SUPPORT NO	DET.	ELEV.	AZ
1-CTSP-293-0152	M5	773.00	1.00
1-CTSP-293-0153	M5	773.00	5.50
1-CTSP-293-0154	M5	773.00	12.00
1-CTSP-293-0155	M5	773.00	17.50
1-CTSP-293-0156	M5	773.00	23.00
1-CTSP-293-0157	M5	773.00	27.00
1-CTSP-293-0158	M5	773.00	32.50
1-CTSP-293-0521	M5	773.50	336.00
1-CTSP-293-0536	M5	773.50	341.00
1-CTSP-293-0539	M5	773.50	346.75
1-CTSP-293-0541	M5	773.50	351.00
1-CTSP-293-0542	M5	773.50	355.50

THIS SHEET ADDED BY REV. 02

11.2) SUPPORT SKETCH

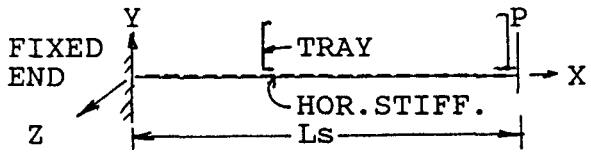

ELEVATION

REF.

DRWG. NO
48W970-4 REV.4 6
48W970-5 REV.11

Lt	LENGTH OF PARTICIPATING TRAY SPAN, in
L	OVERALL LENGTH OF SUPPORT MEMBER, in
Ls	SUPPORT CANTILEVER LENGTH, FROM LOAD TO CL OF WELD, in
P	TOTAL WEIGHT ON SUPPORT MEMBER, lb
E	MODULUS OF ELASTICITY OF SUPPORT MEMBER & TRAY, psi
It	MOMENT OF INERTIA OF TRAY, in4
Is	MOMENT OF INERTIA OF SUPPORT MEMBER, in4
Wt	WEIGHT DUE TO TRAY SPAN, lb
wt	UNIT WEIGHT OF TRAY, lb/ft
Ws	WEIGHT DUE TO SUPPORT, lb
ws	UNIT WEGHT OF SUPPORT MEMBER, lb/ft
F tray	TRAY FREQUENCY, hz
F supp	SUPPORT FREQUENCY, hz
F sys	SYSTEM FREQUENCY, hz

REV. 03

CALC. BY PSPatel 9/24/91

CHECKED BY [illegible] 9/26/91

11.3) DEAD LOAD (D)

R3 * CONSIDER TRAY SPAN OF Lt ON BOTH SIDES OF SUPPORT EXCEPT AS SHOWN BELOW — 5.5 ft

REF. WB-DC-20-21.1 REV.6 PG.2

2-CLIP ANGLES LENGTH, L = 8 in
WEIGHT/FT, ws (L6x3 1/2x3/8)= 11.7 lb/ft
SUPPORT WEIGHT, Ws = L(ws) = 7.8 lb

WEIGHT OF TRAY/FT, wt = 47 lb/ft (TRAY SIZE 4"x18")
PARTICIPATING MASS OF TRAY, Wt= wt(Lt) = 258.5 lb

TOTAL PARTICIPATING MASS, W = Wt + Ws = 266.3 lb

11.4) LIVE LOAD (L)

USE 30 lb/ft TO ACCOUNT FOR PERSONNEL

LIVE LOAD, lb = 30(Lt) = 165 lb

R3 * FOR SUPPORT 1-CTSP-293-0154 EL 773' AZ 12°

TRIBUTARY SPAN — 6'-0" → SEE SHEET 18b OF THIS CALC

THIS SHEET ADDED BY REV. 02

EBASCO SERVICES INCORPORATED

BY [illegible] DATE 6/24/91 BRANCH/PROJECT ID: WCG-1-640 SHEET 11 OF 20

CHKD. BY PSPatel DATE 7/3/91 OFS NO. NR DEPT. NO. NR

CLIENT TVA

PROJECT WBNP/UNIT-1

SUBJECT CALCULATION FOR CABLE TRAY SUPPORT No. 1-CTSP-293-158 (DET. M5)

REV. 03

CALC. BY PSPatel 9/23/91

CHECKED BY [illegible] 9/26/91

11.5) THERMAL LOADS

DUE TO THE NATURE OF CABLE TRAY CONNECTIONS, THE THERMAL LOADS ARE CONSIDERED TO BE SELF-RELIEVING. SINCE TRAY SEGMENTS ARE CONNECTED TO EACH OTHER WITH BOLTS AT SPLICE PLATES AND ATTACHED AT SUPPORT WITH HOLD-DOWN CLIP ANGLES THERE WILL BE ENOUGH CLEARANCE AT BOLT HOLES TO ABSORB ANY THERMAL EXPANSION IN THE TRAY SYSTEMS. HENCE, NO THERMAL LOAD WILL BE CONSIDERED THE DESIGN OF SUPPORTS.

R3 BETWEEN TEMPERATURE DIFF, t degree= 133.7-70= 63.7 (OPERATING & AMBIENT TEMP.)

e, STEEL COEFFICIENT OF THERMAL EXPANSION= 0.00065"/100°

CHANGE OF TRAY LENGTH= e(t)(Lt)/100°

REF DWG. 47E235-44 REV. 12 AISC 7th ED 6-13 R4

(.00065)(63.7/100)(8'x12)= .0397 in < 1/16 in

1/16 in IS AVAILABLE FOR THERMAL EXPANSION AT BOLT HOLES OF CLIP ANGLE CONNECTION WITH THE SUPPORT

To= 0

Ta= 0

REV 4 BY T. B. DATE 6/24/92 CHK. [illegible] DATE 7/9/92

THIS SHEET ADDED BY REV. 02

EBASCO SERVICES INCORPORATED

BY G. Gray DATE 6/24/91 BRANCH/PROJECT ID: WCG-1-640 SHEET 12 OF 20

CHKD. BY PSPatel DATE 7/3/91 OFS NO. NR DEPT. NO. NR

CLIENT TVA

PROJECT WBNP / UNIT-1

SUBJECT CALCULATION FOR CABLE TRAY SUPPORT NO. 1-CTSP-293-158 (DET. M5)

SUPERSEDED PSP 9/23/91

11.6) SYSTEM FREQUENCY

CONSIDER CABLE TRAY SPAN
SIMPLY SUPPORTED BEAM, Lt 5.5 ft

TRAY FREQUENCY:

TRAY FREQUENCY(FIRST MODE),
F tray= (3.14/2(Lt)Lt)SQRT(E(It)/wt)
E= 29000000 psi
It= 1.2788 in4
ws= 47 lb/ft
Ftray= 21.81185 hz

REF.
"FORMULAS FOR NATURAL FREQ. AND MODE SHAPES" BY:R.D.BLEVINS

SUPPORT FREQUENCY:

DEFLECTION= P(L)^3/(3E(Is))
P= W/2 = 133.15 lb
Ls/ angle leg = 4.5 in CL WELD TO CL BOLT
CONSIDER ANGLE AS PLATE:
I angle leg = b(t)^3/12 =
b = 4 in
t = 0.375 in
I angle leg = 0.017578 in4
DEF.= P(L)^3/(3EIs0.007933 in

SUPPORT FREQUENCY, Fsupp= [SQRT(386.4/DEF)]/(3.14(2))

Fsupp.= 35.12329 hz

VIBRATION THEORY &APPLICATIONS BY: THOMSON 1965 ED. PG.5

SYSTEM FREQUENCY:

(1/Fsys)^2 = (1/F tray)^2 + (1/F supp)^2
Fsys. = 18.52958 hz

WB-DC-20-21.1 REV.6 SECT. 5.2.4.9

LEGEND:
X^2=X(X)

THIS SHEET ADDED BY REV. 02

BRANCH/PROJECT ID: WCG-1-640

EBASCO SERVICES INCORPORATED

BY PSPatel DATE 9/23/91 SHEET 12a OF 20

CHKD. BY [illegible] DATE 9/26/91 OFS NO. NR DEPT. NO. NR

CLIENT TVA

PROJECT WBNP/UNIT-1

SUBJECT CALCULATION FOR CABLE TRAY SUPPORT NO. 1-CTSP-293-158 (DET M5)

REF

116 SYSTEM FREQUENCY

CONSIDER CABLE TRAY SPAN = 5.5' = 66"

DWG: 108W10504-10 REV 1 & 108W10504-2 REV 2

TRAY FREQ. F_{TRAY} : $\frac{9.87}{2\pi}\sqrt{\frac{(EI_t)g}{W_s L_t^4}}$

$g = 386.4''/sec^2$

$EI_t = 3.13 \times 10^7$ | BASED ON TEST DATA FOR DEFLECTION IN TRANSVERSE DIRECTION REF ATTACH. E SH. 2 OF 2 ERS 50054.01 - C - 001

FORMULAS FOR STRESS & STRAIN 5TH ED BY ROARK ATTACH. E SH. 2 OF 2

$W_s = 47$ lbs/FT $= 3.92^{\#}/IN$

$L_t = 66''$

$$F_{TRAY} : \frac{9.87}{2\pi}\sqrt{\frac{3.13\times10^7(386.4)}{3.92(66)^4}} = 20.03\,HZ$$

SUPPORT FREQUENCY

DEFLECTION $\delta = \frac{PL^3}{3EI_s}$

AISC 8th EDIT. P 2-111

$P = \frac{W}{2} = 133.15$ lbs

L6x3½x3/8x0-1" Lug

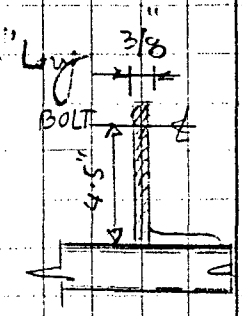

$L_{s(ANGLE)} = 4.5''$ ℄ WELD TO ℄ BOLT

CONSIDER ANGLE AS PLATE

$I_s = \frac{bt^3}{12} = \frac{4(3/8)^3}{12} = 0.0176\,in^4$

$$\delta = \frac{133.15(4.5^3)}{3E(.0176)} = 0.0079''$$

$$F_{SUPP} = \frac{1}{2\pi}\sqrt{g/\delta} = \frac{1}{2\pi}\sqrt{386.4/.0079} = 35.15\,HZ$$

VIBRATION THEORY & APPLICATIONS BY THOMSON 1965 ED PG 5

SYSTEM FREQ :

$$\frac{1}{(F_{SYS})^2} = \frac{1}{(F_{SUP})^2} + \frac{1}{(F_{TRAY})^2} = \frac{1}{(20.03)^2} + \frac{1}{(35.15)^2}$$

WB-DC-20-214 REV 6 SEQ 5.2

$\therefore F_{SYS} = 17.4$ HZ THIS SHEET ADDED BY REV. 03

581 2-88

EBASCO SERVICES INCORPORATED

BY G. Grady DATE 6/24/91 BRANCH/PROJECT ID: WCG-1-640 SHEET 13 OF 20

CHKD. BY PSPatil DATE 7/3/91 OFS NO. NR DEPT. NO. NR

CLIENT TVA

PROJECT WBNP / UNIT-1

SUBJECT CALCULATION FOR CABLE TRAY SUPPORT No. 1-CTSP-293-15B (DET. M5)

11.7) SEISMIC DESIGN 'G' VALUES

USE ACTUAL 'G' VALUES FOR OBE, SSE& DBA CONDITIONS

REF: WCG-1-370 REV.0, QIR-CEB-WBN-89-361 REV.0 & CEB-WBN-85-50-C REV.1.

DIRECTION	HORIZONTAL, N-S/E-W X OR Z, Gh	VERTICAL Y, Gy
OBE, EL. 792' 4% DAMPING	0.5	0.47
SSE, EL. 792' 7% DAMPING	0.71	0.67
DBA, EL. 773' 7% DAMPING	2.445 N-S, AZ. 315 1.4815 E-W, AZ. 315 3.9265 ABS.SUM	0.3972 AZ. 315

SUPERSEDED PSP 9/24/91

THIS SHEET ADDED BY REV. 02

BRANCH/PROJECT ID: WCG-1-640

EBASCO SERVICES INCORPORATED

BY PSPatel DATE 9/23/91 SHEET 13a OF 20

CHKD. BY [illegible] DATE 9/26/91 OFS NO. NR DEPT. NO. NR

CLIENT TVA

PROJECT WBNP/UNIT-1

SUBJECT CALCULATION FOR CABLE TRAY SUPPORT NO. 1-CTSP-293-158 (DET M5)

REF

11.7 SEISMIC DESIGN 'G' VALUES

USE ACTUAL 'G' VALUES FOR OBE SSE & DBA CONDITIONS @ SYSTEM FREQ. = 17.4 HZ

WCG-1-370 REV 0

QIR-CEB-WBN-89-361 REV 0 & CEB-WBN-85-50-C REV 1

	4% OBE EL 792'		7% SSE EL 792'		7% DBA EL 773.5'		
	NS/EW	V	NS/EW	V	N-S	E-W	V
AZ 0°	0.5	0.47	0.71	0.67	2.4680	0.7213	0.4558
AZ 30°	↓	↓	↓	↓	1.8239	1.6656	0.2771
AZ 330°	↓	↓	↓	↓	2.6481	1.6168	0.2072

DBA 773.5'
GOVERNING VALUES:

	N-S/EW	VERT
	2.6481	
ABS	1.6168	0.2072
SUM	4.2649	

THIS SHEET ADDED BY REV. 3

581 2-88

EBASCO SERVICES INCORPORATED

BY gg/ly DATE 6/24/91 BRANCH/PROJECT ID: WCG-1-640 SHEET 14 OF 20

CHKD. BY B Patel DATE 7/3/91 OFS NO. NR DEPT. NO. NR

CLIENT TVA

PROJECT WBNP / UNIT-1

SUBJECT CALCULATION FOR CABLE TRAY SUPPORT No. 1-CTSP-293-15B (DET. M5)

11.8) DESIGN LOADS

LOAD	HORIZONTAL X OR Z, lb	DIRECTION N-S E-W	VERTICAL Y, lb
D		0	266.3
L		0	165
E	W(1.2Gh)= OBE	159.78	W(1.2Gy)= 150.1932
E'	W(1.2Gh)= SSE	226.8876	W(1.2Gy)= 214.1052
Pa	W(1.2Gh)= DBA	1254.752	W(1.2Gy)= 126.9292
To		0	0
Ta		0	0

SUPERSEDED RSK 5/24/91

THIS SHEET ADDED BY REV. 02

BRANCH/PROJECT ID: WCG-1-640

EBASCO SERVICES INCORPORATED

BY PSPatel DATE 9/23/91 SHEET 14a OF 20

CHKD. BY [illegible] DATE 9/26/91 OFS NO. NR DEPT. NO. NR

CLIENT TVA

PROJECT WBNP/UNIT-1

SUBJECT CALCULATION FOR CABLE TRAY SUPPORT NO. 1-CTSP-293-158 (DET M5)

			REF
11.8 DESIGN LOADS			
LOAD COMB	HORIZ. N-S/E-W X OR Z lbs	VERT Y lbs	
D	0	266.30	P.10/20
L	0	150	
E	Wt(1.2Gh) 159.78	Wt(1.2Gy) 150.19	
E'	Wt(1.2Gh) 226.89	Wt(1.2Gy) 214.11	
Pa	Wt(1.2Gh) 136.89	Wt(1.2Gy) 66.21	

THIS SHEET ADDED BY REV. 03

581 2-88

EBASCO SERVICES INCORPORATED

BY G. Ghaly DATE 6/24/91 BRANCH/PROJECT ID: WCG-1-640 SHEET 15 OF 20

CHKD. BY PSPatel DATE 7/3/91 OFS NO. NR DEPT. NO. NR

CLIENT TVA

PROJECT WBNP/UNIT-1

SUBJECT CALCULATION FOR CABLE TRAY SUPPORT No. 1-CTSP-293-158 (DET. M5)

REFERENCE

WB-DC-20-21.1
REV. 6 SECT. 4.3

11.9) LOADING COMBINATIONS

DIRECTION LOAD CASE		ALLOW STRESS	HORIZONTAL X OR Z, lb	VERTICAL Y, lb
I	D+L	AISC	0	431.3
IA	D+E	AISC	159.78	416.4932
IB	D+E+To	1.5xAISC	159.78	416.4932
II	D+E'	1.5xAISC	226.8876	480.4052
IIA	D+E'+To	1.5xAISC	226.8876	480.4052
III	D+E'+Pa+Tl	1.5xAISC	1481.639	607.3344

GOVERNING DESIGN LOADS:

FIND RATIO OF LOADS FROM CASE III TO LOADS FROM CASE IA, COMPARE THAT RATIO TO ALLOWABLE RATIO.

HORIZ. DIRECTION: Ph(LOAD CASE III)/Ph(LOAD CASE IA)=
9.273 >1.5
Ph= 1481.639 lb

VERT. DIRECTION: Py(LOAD CASE III/Py(LOAD CASE IA)=
1.458209 <1.5 Py=1.5xLOAD CASE IA
Py= 624.7398 lb

SUPERSEDED
PSP 9/24/91

THIS SHEET ADDED BY REV. 02

BRANCH/PROJECT ID: WCG-1-640

EBASCO SERVICES INCORPORATED

BY PSPatel DATE 9/23/91 SHEET 15a OF 20

CHKD. BY RGW DATE 9/26/91 OFS NO. NR DEPT. NO. NR

CLIENT TVA

PROJECT WBNP/UNIT-1

SUBJECT CALCULATION FOR CABLE TRAY SUPPORT NO. 1-CTSP-293-158 (DET M5)

REF

11.9 LOADING COMBINATION

WB-DC-20-21.1 REV 6 SECT 4.3

DIR. LOAD CASE	ALLOW STRESSES	HORIZ X OR Z lbs	VERT Y lbs
I D+L	AISC	0	416.30
IA D+E	AISC	159.78	416.49
II D+E'	1.5(AISC)	226.89	480.41
III D+E'+Pa	1.5(AISC)	1589.78	546.62

GOVERNING LOAD CASE = LOAD CASE III / LOAD CASE IA

FOR HORIZ. DIR. $P_h = \frac{1589.78}{159.78} = 9.9 > 1.5$ ALLOW STRESS RATIO

$\therefore P_h = 1589.78$ lbs

FOR VERT ↓ DIR (DOWN) $P_y = \frac{546.62}{416.49} = 1.31 < 1.5$

$\therefore \downarrow P_y = 416.49 \times 1.5 = 624.62$ lbs

* FOR VERT ↑ DIR (UP) $P_{y_1} = 1.5(\uparrow 214.11 + \uparrow 66.21 - \downarrow 266.30)$ p. 14a/20

P_{y_1} (TENSION) = 14.0 # ↑

* FOR CHECKING THE TENSION ON THE WELD BETWEEN ANGLE AND THE STIFFENER SUBTRACK THE GRAVITY LOAD

THIS SHEET ADDED BY REV. 02

581 2-88

11.10) QUALIFICATION OF L 6 x 3 1/2 x 3/8:

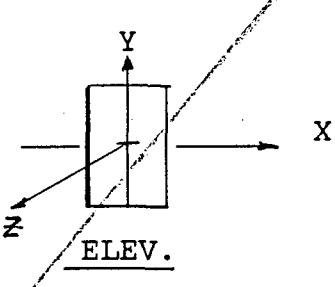

CONSIDER THE ANGLE AS PLATE 3/8 X 4 LONG
FIXED AT WELD SIDE AND FREE AT BOLT LOCATION.

FORCES AND MOMENTS AT WELD:

Fx= Ph/2 = 740.8199 lb
Fy= Py/2 = 312.3699 lb
Fz= Ph/2 = 740.8199 lb

BOLT LOCATION FROM WELD:
x'= 1.75 in
y'= 4.5 in
z'= 0 in

Mx= Fz.y'= 3333.689 in.lb

My= Fz.x'= 1296.434 in.lb

Mz= Fx.y'+ Fy.x'= 3880.337 in.lb
CONSIDER Mz 0 BECAUSE ANGLE CAN ROTATE ABOUT Z-AXIS.

SUPERSEDED RL 5/24/91

THIS SHEET ADDED BY REV. 02

EBASCO SERVICES INCORPORATED

BY PSlotul DATE 9/23/91 BRANCH/PROJECT ID: WCG-1-640 SHEET 16a OF 20

CHKD. BY RGW DATE 9/26/91 OFS NO. NR DEPT. NO. NR

CLIENT TVA

PROJECT WBNP / UNIT-1

SUBJECT CALCULATION OF CABLE TRAY SUPPORT No. 1-CTSP-293-158 (DET M5)

11.10 QUALIFICATION OF L6 x 3½ x 3/8" (TRAY HOLD DOWN)

CONSIDER LOADS IN X & Y DIRECTIONS (GOVERNS)

LOADS @ EACH HOLD DOWN ℄

$F_x = P_h/2 = 794.89$ lbs

$F_y = P_v/2 = 312.37$ lbs

$F_z = 0$

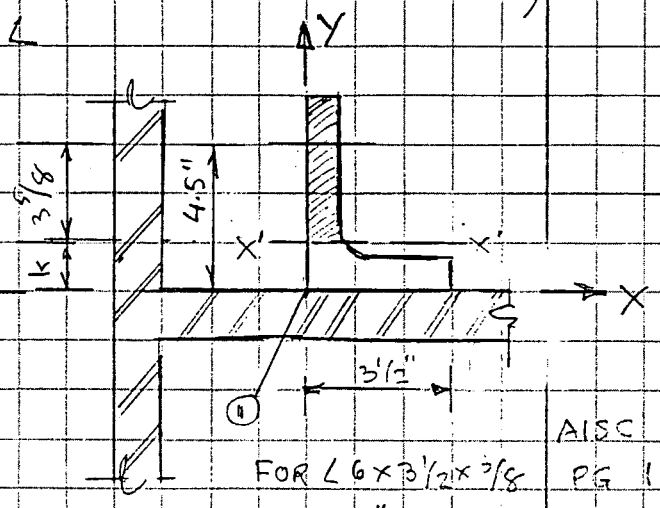

M_z @ CRITICAL SECT X'-X'

$= F_x (3.625)$

$= 794.89 \times 3.625$

$= 2881.48$ "lb

FOR L6 x 3½ x 3/8 K = 7/8"

AISC 7TH ED PG 1-59

$M_x = 0$; $M_y = 0$

SINCE SHORT LEG OF ANGLE IS WELDED ON BOTH SIDES CHECK ANGLE CONSIDERING AS PLATE 3/8" x 4" LG WITH CRITICAL SECTION @ AXIS X'-X'

PROPERTIES OF PL 3/8" x 4" LG

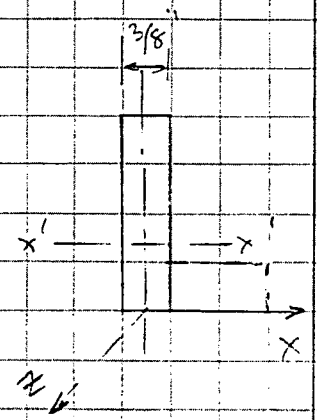

$b = 4"$

$t = 3/8"$

$A = b \times t = 1.5 \text{ in}^2$

$S_x = \frac{t\,b^2}{6} = 1 \text{ in}^3$

$S_z = \frac{b\,t^2}{6} = 0.094 \text{ in}^3$

$I = \frac{bd^3}{12}$

$r = \frac{d}{\sqrt{12}}$

THIS SHEET ADDED BY REV. 0-3

581 2-88

QUALIFICATION OF L 6 x3 1/2 x 3/8 (CONT):

SECTIONAL PROPERTIES OF PLATE (3/8" X 4" LG)

b=	4	in
t=	0.375	in
A=b.t=	1.5	in2
Sx=t(b)^2/6=	1	in3
Sz=b(t)^2/6=	0.09375	in3

Fa=Fb=0.6x36000x1.5 =	32400	psi
Fv=0.52x36000 =	18720	psi
fa=Fy/A =	208.2466	psi
fvx=Fx/A =	493.8799	psi
fvz=Fz/A =	493.8799	psi
fr=(fvx^2 + fvz^2)^1/2 =	698.4517	psi < Fv, OK
fb= Mx/Sx + Mz/Sz =	3333.689	psi
fa/Fa + fb/Fb =	0.109319	< 1.0, OK

(SUPERSEDED BY [illegible] 9/24/91)

THIS SHEET ADDED BY REV. 02

BRANCH/PROJECT ID: WCG-1-640

EBASCO SERVICES INCORPORATED

BY PSPadd DATE 9/23/91 SHEET 17a OF 20

CHKD. BY [illegible] DATE 9/26/91 OFS NO. NR DEPT. NO. NR

CLIENT TVA

PROJECT WBNP/UNIT-1

SUBJECT CALCULATION FOR CABLE TRAY SUPPORT NO. 1-CTSP-293-158 (DET M5)

11.10 REF

QUALIFICATION OF L6×3½×3/8 (CONT'D)

$f_a = \frac{F_y}{A} = \frac{312.37}{1.5} = 208.25$ psi

$f_{vx} = \frac{F_x}{A} = \frac{794.89}{1.5} = 529.93$ psi

$f_b = \frac{M_z}{S_z} = \frac{2881.48}{0.09375} = 30736$ psi

ALLOWABLE STRESSES

$F_b = 0.6(36000)1.5 = 32400$ psi — WB-DC-30-21.1 R6

$F_v = \frac{0.9}{\sqrt{3}}(36000) = 18706.14$ psi > 529.93 psi OK — Sect A-3

$\frac{f_a}{F_a} + \frac{f_b}{F_b} = \frac{208.25}{21240} + \frac{30736}{32400} = 0.96 < 1.0$ OK

$K/r = \frac{2.1 \times 4.5}{\sqrt{I/A}} = \frac{2.1 \times 4.5}{\sqrt{2/1.5}} = 8.18$ — AISC 8th EDIT p 5-14 TABLE 3-36

$F_a = 21.24$ KSI

THIS SHEET ADDED BY REV. 03

581 2-88

EBASCO SERVICES INCORPORATED

BY G.Gray DATE 6/24/91 BRANCH/PROJECT ID: WCG-1-640 SHEET 18 OF 20

CHKD. BY PSPatel DATE 7/3/91 OFS NO. NR DEPT. NO. NR

CLIENT TVA

PROJECT WBNP/UNIT-1

SUBJECT CALCULATION FOR CABLE TRAY SUPPORT NO. 1-CTSP-293-15B (DET. M5)

11.11) WELD QUALIFICATION

WELD BETWEEN: L6x3 1/2x3/8 &SCV STIFFENER PARALLEL WELD

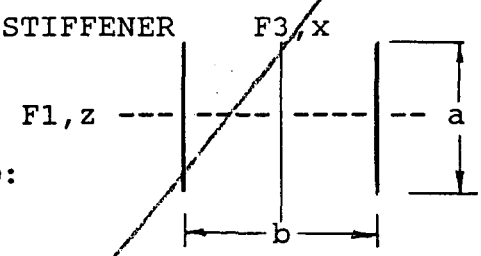

FORCES AND MOMENTS AT CENTER OF WELD:

F1=	Fz=	740.8199	lb
F2=	Fy=	312.3699	lb
F3=	Fx=	740.8199	lb
M1=	Mz=	0	in.lb
M2=	My=	1296.434	in.lb
M3=	Mx=	3333.689	in.lb

WELD PROPERTIES:

a=	2.25	in
b=	4	in
A=2a =	4.5	in
S1=a(a)/3 =	1.6875	in2
S3=a(b) =	9	in2
C1=a/2 =	1.125	in
C3=b/2 =	2	in
J/C1=[3(b)b+a(a)]/3 =	17.6875	in2
J/C3=a[3(b)b+a(a)]/3b =	9.949218	in2

REF. DESIGN OF WELDED STRUCTURES BY BLODGETT, PG 7.4-7

SUPERSEDED BY 6/24/91

THIS SHEET ADDED BY REV. 02

BRANCH/PROJECT ID: WCG-1-640

EBASCO SERVICES INCORPORATED

BY P S Patel DATE 9/23/91 SHEET 189 OF 20

CHKD. BY [illegible] DATE 9/26/91 OFS NO. NR DEPT. NO. NR

CLIENT TVA

PROJECT WBNP/UNIT-1

SUBJECT CALCULATION FOR CABLE TRAY SUPPORT NO. 1-CTSP-293-158 (DET M5)

REF

11.11 WELD QUALIFICATION

WELD BETWEEN L6x3½x⅜ & SCV STIFFENER — ATT. B p.24/25

⅛" PARALLEL FILLET WELD 2¼" LG @ 4" C/C

WELD PROPERTIES

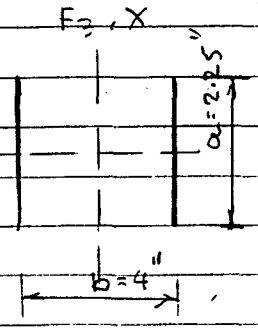

$a = 2.25$ in

$b = 4$ in

$A = 2a = 4.5''$

$S_1 = \frac{a^2}{3} = 1.6875 \text{ in}^2$; $S_3 = ab = 9 \text{ in}^2$

$c_1 = a/2 = 1.125''$; $c_3 = b/2 = 2''$

$J/c_1 = a(3b^2+a^2)/6 \,/\, a/2 = 17.6875$

$J/c_3 = \frac{b^3+3bd^2}{6} \,/\, b/2 \cong 10.396$

WELDED STRUCTURES BY BLODGETT 1966

FORCES @ CENTER OF WELD

$F_1 = F_z = 0$; $M_z = M_1 = 794.89(4.5) + 312.37(1.125) = 3928.42$ #"

* $F_2 = F_y = 14/2 = 7$ # ; $M_y = M_2 = 0$ — pg 15 of 20

$F_3 = F_x = 794.89$ # ; $M_x = M_3 = 0$

FORCES ON WELD

$$F = \left[\left(\frac{F_2}{A} + \frac{M_1}{S_1} + \frac{M_3}{S_3}\right)^2 + \left(\frac{F_1}{A} + \frac{M_2 c_1}{J}\right)^2 + \left(\frac{F_3}{A} + \frac{M_2 c_3}{J}\right)^2\right]^{1/2}$$

$$= \left[\left(\frac{7}{4.5} + \frac{3928.42}{1.6875}\right)^2 + \left(\frac{794.89}{4.5}\right)^2\right]^{1/2} = 2336.20 \text{ \#/in}$$

WELD ALLOWABLES

$S_W = 0.3(70000) \cdot .707 \times 1.5 = 22271$ psi

$S_H = \frac{0.9}{\sqrt{3}} \times (36000) = 18706.14$ psi

$W_{req} = 2336.20 / 18706.14 \cong 0.125$ ≙ PROVIDED 0.125 OK

W3-110-20 -21.1 TABLE 4.3.1 p.12

THIS SHEET ADDED BY REV. 03

581 2-88

BRANCH/PROJECT ID: WCG-1-640

EBASCO SERVICES INCORPORATED

BY PSPatel DATE 9/24/91 SHEET 18b OF 20

CHKD. BY [illegible] DATE 9/26/91 OFS NO. NR DEPT. NO. NR

CLIENT TVA

PROJECT WBNP/UNIT-1

SUBJECT CALCULATION FOR CABLE TRAY SUPPORT NO. 1-CTSP-293-158 (DET M5)

REF

11.11 WELD QUALIFICATION – (CONT)

$l_1 = 5'\text{-}6'' = 66''$

FOR TRIBUTARY SPAN 6'-0" = 72" = L_2

1-CTSP-293-0154 EL 773'-0" AZ 12° — ATTACH. B SH. 6 OF 25

TRAY FREQ $(f_1)_2 = \frac{20.03 \times 66^2}{72^2} = 16.83$ HZ $\left(\because f_1 \propto \frac{1}{L_1^2}\right)$ — p. 12a/20

SUPP FREQ = = 35.15 HZ

SYSTEM FREQ = = 15.18 HZ

CHANGE IN 7% DBA VALUES EL 773'-0" 'G' VALUES

	N-S	EW	V
AZ 0°	2.4680	0.7213	0.4558
AZ 30°	1.8239	1.6656	0.2771

SEE p. 13a/20

VALUES @ A = 30°	N-S/EW	V
	1.8239	
	+ 1.6656	
ABS SUM	3.4895	0.2771

DL TRAY + 2 CLIP L = 6'.0 × 47 + 7.8# (11.7 #/ft × 4"/12 × 2) = 289.8 lbs. — Ans = 8th EDIT. → p. 1-43

ACTUAL LOADS $P_h = 1.2 \times 289.8 (.71 + 3.4895)$ — P 13a/20

$= 1461^{\#} < 1589.78^{\#}$ USED OK — P. 15a/20

ACTUAL LOADS $P_V = 1.5 [1.2 \times 0.47 \times 289.8 + 289.8]$ — p. 13a/20

CASE III

$= 679.87^{\#} > 624.62^{\#}$ — p. 15a/20

HORIZ. LOAD USED IS $\frac{1589.78}{1461} = 1.088$ MORE THAN ACTUAL LOAD.

SMALL INCREASE IN VERT LOAD $\frac{679.87}{624.62} = 1.088$ OK SEE PG. 19 (TOP)

THIS SHEET ADDED BY REV. 3

581 2 98

EBASCO SERVICES INCORPORATED

BY [illegible] DATE 6/24/91 BRANCH/PROJECT ID: WCG-1-640 SHEET 19 OF 20

CHKD. BY [illegible] DATE 7/3/91 OFS NO. NR DEPT. NO. NR

CLIENT TVA

PROJECT WBNP/UNIT-1

SUBJECT CALCULATION FOR CABLE TRAY SUPPORT NO. 1-CTSP-293-15B (DET. M5)

WELD QUALIFICATION(CONT):

FORCES ON WELD:

F=[(F2/A + M1/S1 + M3/S3)^2 + (F1/A + M2(C1/J))^2 + (F3/A + M2(C3/J))^2]^1/2

F= 385.2412 lb/in

REQUIRED WELD SIZE:

			REF.
Sw= 0.3(70000)1.5=	31500 psi	WELD	WB-DC-20-21.1 REV.6 TABLE 4.3-1
Sm= .52(36000)=	18720 psi	BASE METAL	

Wr= F/(Sm)= 0.020579 in

AS-BUILT WELD SIZE 0.0625 in

AS-BUILT WELD > REQUIRED, OK

SUPERSEDED PSI 9/24/91

THIS SHEET ADDED BY REV. 02

BRANCH/PROJECT ID: WCG-1-640

EBASCO SERVICES INCORPORATED

BY PSPadil DATE 9/24/91 SHEET 19a OF 20

CHKD. BY RRLee DATE 9/26/91 OFS NO. NR DEPT. NO. NR

CLIENT TVA

PROJECT WBNP/UNIT-1

SUBJECT CALCULATION FOR CABLE TRAY SUPPORT NO. 1-CTSP-293-158 (DET M5)

REF

11.11 WELD QUALIFICATION – (CONT)

THE INCREASE OF ACTUAL LOAD IN VERTICAL DIRECTION IS NOT CRITICAL FOR DESIGN. THE REDUCTION IN HORIZ. DIRECTION REDUCES MOMENT M_z WHICH MAKES DESIGN BY USING ACTUAL LOADS CONSERVATIVE

∴ 6'-0" SPAN IS NOT CRITICAL FOR SUPPORT 1-CTSP-293-0154 A≅12°

11.12. QUALIFICATION OF TRAY CLIP BOLTS

4 – 3/8" ϕ BOLTS

F_t (TENSION) = $\frac{1589.78}{4}$ = 397.4# / BOLT — CALC WCG-1-642 REV 02 SH. 24 OF 25

F_v (SHEAR) = $\frac{624.62}{4}$ = 156.2# / BOLT

WITH COMPARISON TO CALC. WCG-1-642 REV 02 → SH 24 OF 25

$F_{t\,ACT}$ = 397.4# < 473.7#

$F_{v\,ACT}$ = 156.2# < 195.75#

Design values for WCG-1-642 Rev. 2

∴ BOLTS ARE OK BY COMPARISON OF FORCES

THIS SHEET ADDED BY REV. 03

581 2-88

11.12) QUALIFICATION OF TRAY CLIP BOLTS

4-3/8 0 A307 BOLTS:

			REF.
A=3.14(DIA.)^2/4=	0.110446	in2	WB-DC-20-21.1
Fyt=	27000	psi	REV.6
Fyv=	13500	psi	

TENSION/BOLT=Fx/2=370.4099 lb
Fy/BOLT= Fy/2= 156.1849 lb
Fz/BOLT= Fz/2= 370.4099 lb
SHEAR/BOLT=(Fy^2+Fz^2)^1/2= 220.8788 lb

BOLT ALLOWABLES:
TENSION=A.Fyt= 2982.058 lb > Actual tension, OK
SHEAR= A.Fyv= 1491.029 lb > Actual tension, OK

12) SUMMARY OF CALCULATION RESULTS

		ACTUAL	ALLOW.
3/8 BOLTS:	SHEAR, lb	220.8788	1491.029
	TENSION, lb	370.4099	2982.058
L5x3x1/4:	SHEAR, psi	698.4517	18720
	COMBINED STRESS RATIO	0.109319	1
		AS-BUILT	REQUIRED
FILLET WELD SIZE, in:		0.0625	0.020579

13) CONCLUSION

ALL CABLE TRAY SUPPORTS AS PER DETAIL M5 (SHOWN IN DWG 48W970-4 REV.4 & 48W970-5 REV.11) ARE STRUCTURALLY ADEQUATE AS CONSTRUCTED AND MEET ALL APPLICABLE DESIGN CRITERIA. THUS NO FURTHER CALCULATIONS ARE REQUIRED.

SUPERSEDED BY 5/29/91

THIS SHEET ADDED BY REV. 02

BRANCH/PROJECT ID: WCG-1-640

EBASCO SERVICES INCORPORATED

BY PSPatty DATE 9/24/91 SHEET 20a OF 20

CHKD. BY [illegible] DATE 9/20/91 OFS NO. NR DEPT. NO. NR

CLIENT TVA

PROJECT WBNP/UNIT-1

SUBJECT CALCULATION FOR CABLE TRAY SUPPORT NO. 1-CTSP-293-158 (DET M5)

12. SUMMARY OF CALCULATION RESULTS

		ACTUAL	ALLOW	REF
L 6"x3½"x3/8": SHEAR	psi	529.93	18706.14	P. 17a/20
: COMBINED STRESS RATIO		0.96	1.0	↓
FILLET WELD SIZE, IN		0.125	0.125	P. 18a/20
3/8" ϕ BOLT : COMBINED STRESS RATIO		0.44	1.0	P. 19a/20

13. CONCLUSION

ALL CABLE TRAY SUPPORTS AS PER DETAIL M5 (SHOWN IN DWG 48W970-4 & 48W970-5 ARE
↳ REV. 6 ↳ REV 11
STRUCTURALLY ADEQUETE AS CONSTRUCTED AND MEET ALL APPLICABLE DESIGN CRETERIA. THUS NO FURTHER CALCULATIONS ARE REQUIRED

THIS SHEET ADDED BY REV. 1

EBASCO SERVICES INCORPORATED
BRANCH/PROJECT ID.: WCG-1-CAO

SHEET 1 OF 1

DEPT. NO. NR

BY [illegible] DATE 6/24/91
CHKD. BY PSPatel DATE 7/3/91
OFS NO. NR
CLIENT TVA
PROJECT WBNP - Unit-1
SUBJECT CALCULATION FOR CABLE TRAY SUPPORT NO. 1-CTSP-293-15B (DET. M5)

REV. 03
CALC. BY PSPatel 9/24/91
CHECKED BY [illegible] 9/26/91

14. ATTACHMENTS

TABLE OF CONTENTS

	NO. OF PAGES
Table of Contents of Attachment(s)	1
Attachment "A" Verification Work Sheet	~~1~~ 2
ATTACH. 'B' FIELD DATA	21a, 22a, ~~25~~ 27 R3
ATTACH. 'C'	4
ATTACH. 'D'	4
ATTACH 'E'	2

TOTAL NO. OF PAGES ~~35~~ 40 R3

THIS SHEET ADDED BY REV. 02

BRANCH/PROJECT ID: WCG-1-640

ATTACHMENT "A"
SHEET 1 OF 2

ATTACHMENT A
VERIFICATION WORKSHEET
FOR CALCULATIONS AND DRAWINGS

Task No. NR

Title: CALCULATION FOR CABLE TRAY SUPPORT # 1-CTSP-293-158 (DETMS)

Document No. 1 CTSP 293 158

Revision 03

QUESTIONS TO BE ADDRESSED

1	Were the inputs correctly selected at the correct revision level, and incorporated into the design?
2	Are the assumptions necessary to perform the design activity adequately described and reasonable? Where necessary, are assumptions identified for subsequent reverification after the detailed design activities are completed?
3a	Are the appropriate quality requirements specified?
3b	Are the appropriate quality assurance requirements specified?
4	Are the applicable codes, standards, and regulatory requirements including issue and addenda properly identified, and are their requirements for design met?
5	Have applicable construction and operating experience been considered?
6	Have the design interface requirements been satisfied?
7	Was an appropriate design method used?
8	Is the output reasonable compared to inputs?
9	Are the specified parts, equipment, and processes suitable for the required application? Are all applicable construction specifications referenced on the drawing(s)?
10	Are the specified materials compatible with each other and with the design environmental conditions to which the materials will be exposed?
11	Have adequate maintenance features and requirements been specified?
12	Are accessibility and other design provisions adequate for performing needed maintenance and repair?
13	Has adequate accessibility been provided to perform the inservice inspection expected to be required during the plantlife?
14	Has the design properly considered radiation exposure to the public and plant personnel?
15	Is the acceptance criteria incorporated in the design document sufficient to allow verification that design requirements have been satisfactorily accomplished?
16	Have adequate preoperational and subsequent periodic test requirements been appropriately specified?
17	Are adequate handling, storage, cleaning and shipping requirements specified?
18	Are adequate identification requirements specified?
19	Are requirements for record preparation review, approval, retention, etc., adequately specified?

For Calculations, only questions 1, 2, 4, 6, 7, 8 and 15 are considered applicable.

Independent Verifier RBDESAI / [illegible] 9-26-91
Print/Sign Date

THIS SHEET ADDED BY REV. 03

BRANCH/PROJECT ID:
WCG-1-640

ATTACHMENT A
VERIFICATION WORKSHEET
FOR CALCULATIONS AND DRAWINGS

R3

ATTACHMENT "A"
SHEET ~~1 OF 1~~ 2 OF 2
9/18/91

Task No. NR

Title: CALCULATION FOR CABLE TRAY SUPPORT # 1-CTSP-293-158 (DET-M5)

Document No. 1 CTSP 293 158

Revision 02

THIS SHEET ADDED BY REV. 02

QUESTIONS TO BE ADDRESSED

1	Were the inputs correctly selected at the correct revision level, and incorporated into the design?
2	Are the assumptions necessary to perform the design activity adequately described and reasonable? Where necessary, are assumptions identified for subsequent reverification after the detailed design activities are completed?
3a	Are the appropriate quality requirements specified?
3b	Are the appropriate quality assurance requirements specified?
4	Are the applicable codes, standards, and regulatory requirements including issue and addenda properly identified, and are their requirements for design met?
5	Have applicable construction and operating experience been considered?
6	Have the design interface requirements been satisfied?
7	Was an appropriate design method used?
8	Is the output reasonable compared to inputs?
9	Are the specified parts, equipment, and processes suitable for the required application? Are all applicable construction specifications referenced on the drawing(s)?
10	Are the specified materials compatible with each other and with the design environmental conditions to which the materials will be exposed?
11	Have adequate maintenance features and requirements been specified?
12	Are accessibility and other design provisions adequate for performing needed maintenance and repair?
13	Has adequate accessibility been provided to perform the inservice inspection expected to be required during the plantlife?
14	Has the design properly considered radiation exposure to the public and plant personnel?
15	Is the acceptance criteria incorporated in the design document sufficient to allow verification that design requirements have been satisfactorily accomplished?
16	Have adequate preoperational and subsequent periodic test requirements been appropriately specified?
17	Are adequate handling, storage, cleaning and shipping requirements specified?
18	Are adequate identification requirements specified?
19	Are requirements for record preparation review, approval, retention, etc., adequately specified?

For Calculations, only questions 1, 2, 4, 6, 7, 8 and 15 are considered applicable.

REV. 03

Independent Verifier P S Patel / P S Patel — Print/Sign

7/3/91 — Date

P S Patel 9/27/91

9/27/91

B26 '91 0408 112

PACKAGE NO. CT-SB-H-060 BRANCH/PROJECT ID WBN
PAGE 1 OF 5 WCG-1-640 TI-2004
Revision 0
LOP

Record

APPENDIX G
Page 1 of 1

WALKTHROUGH PACKAGE COVERSHEET

WATTS BAR UNIT - 1
CABLE TRAY/CABLE TRAY SUPPORTS
ENGINEERING WALKTHROUGH

ATTACHMENT B
SHEET 1 OF 25

Walkthrough Team Member: Paul Olson / PAUL OLSON Date 02-22-91
Signature Print

Walkthrough Team Member: George Ghaly / GEORGE GHALY Date 2/22/91
Signature Print

Accepted by Walkthrough Team Coordinator: Alan Ketin / ALAN KETIN Date 3/21/91
Signature Print

List of Appendixes:

Appendix B or C C

Appendix F (Yes or No) NO

Appendix D (Yes or No) YES

Appendix H (Yes or No) NO

THIS SHEET ADDED BY REV. 02

BRANCH/PROJECT ID: WCG-1-640

WBN
TI-2004
Revision 0

PACKAGE NO. CT-SB-H-060
PAGE 5 OF 5
SUPPORT I.D.: 1-CTSP-293-0152

APPENDIX D
Page / of /

CONTINUATION SHEET

ATTACHMENT B
SHEET 2 OF 25

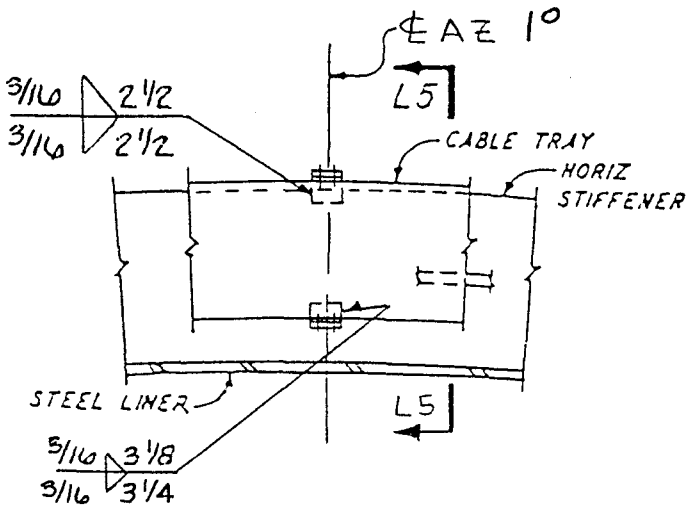

PLAN

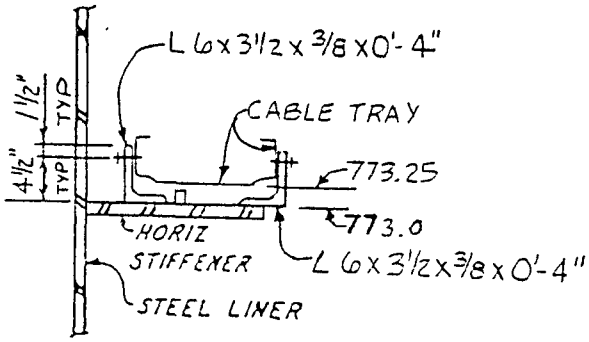

L5-L5

DET M5

THIS SHEET ADDED BY REV. 02

Completed By: Paul Olson / PAUL OLSON 02-22-91
Signature Print Date

Verified By: George Ghaly / GEORGE GHALY 2/22/91
Signature Print Date

B26 '91 0408 111 BRANCH/PROJECT ID: WCG-1-640

PACKAGE NO. CT-SB-H-001

PAGE 1 OF 5

WBN
TI-2004
Revision 0
LOP

A Record

APPENDIX G
Page 1 of 1

ATTACHMENT B
SHEET 3 OF 25

WALKTHROUGH PACKAGE COVERSHEET

WATTS BAR UNIT - 1
CABLE TRAY/CABLE TRAY SUPPORTS
ENGINEERING WALKTHROUGH

Walkthrough Team Member: Paul Olson / PAUL OLSON Date 02-22-91
Signature Print

Walkthrough Team Member: George Ghaly / GEORGE GHALY Date 2/22/91
Signature Print

Accepted by Walkthrough Team Coordinator: Alan Ketin / ALAN KETIN Date 3/21/91
Signature Print

List of Appendixes:

Appendix B or C C

Appendix F (Yes or No) NO

Appendix D (Yes or No) YES

Appendix H (Yes or No) NO

THIS SHEET ADDED BY REV. 02

BRANCH/PROJECT ID: WCG-1-640

WBN
TI-2004
Revision 0

PACKAGE NO. CT-SB-H-061
PAGE 5 OF 5
SUPPORT I.D.: 1-CTSP-293-0153

APPENDIX D
Page 1 of 1

CONTINUATION SHEET

ATTACHMENT B
SHEET 4 OF 25

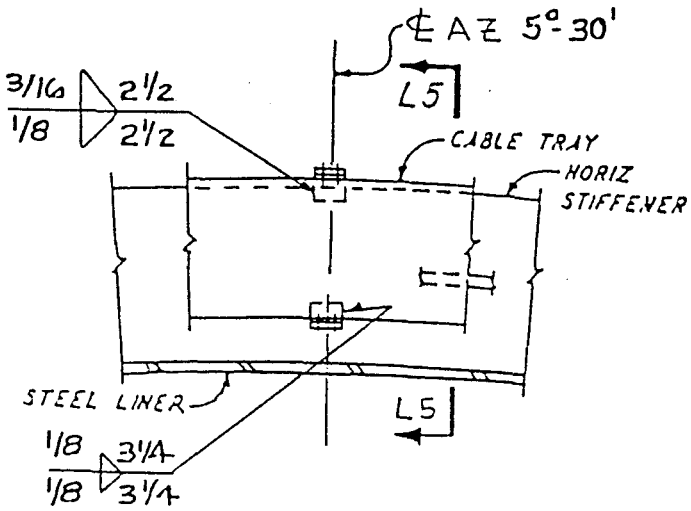

PLAN

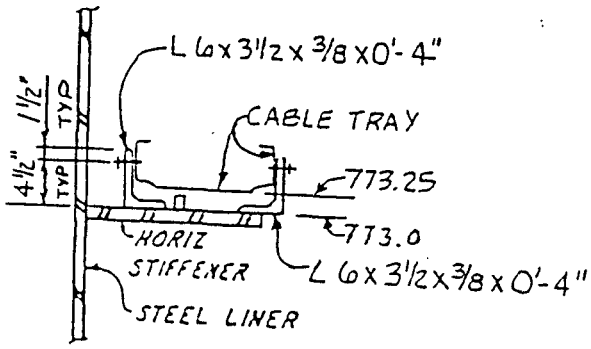

L5-L5

DET M5

THIS SHEET ADDED BY REV. 02

Completed By: Paul Olson / PAUL OLSON 02-22-91
Signature Print Date

Verified By: George Ghaly / GEORGE GHALY 2/22/91
Signature Print Date

B26 '91 0408 110 BRANCH/PROJECT ID: WCG-1-640

PACKAGE NO. CT-SB-H-002
PAGE 1 OF 5

WBN
TI-2004
Revision 0
LOP

Record

APPENDIX G
Page 1 of 1

WALKTHROUGH PACKAGE COVERSHEET

WATTS BAR UNIT - 1
CABLE TRAY/CABLE TRAY SUPPORTS
ENGINEERING WALKTHROUGH

ATTACHMENT B
SHEET 5 OF 25

Walkthrough Team Member: Paul Olson / PAUL OLSON Date 02-22-91
Signature Print

Walkthrough Team Member: George Ghaly / GEORGE GHALY Date 2/22/91
Signature Print

Accepted by Walkthrough Team Coordinator: Alan Ketin / ALAN KETIN Date 3/21/91
Signature Print

List of Appendixes:

Appendix B or C C

Appendix F (Yes or No) NO

Appendix D (Yes or No) YES

Appendix H (Yes or No) NO

THIS SHEET ADDED BY REV. 02

BRANCH/PROJECT ID: WCG-1-640

WBN
TI-2004
Revision 0

PACKAGE NO. CT-SB-H-062
PAGE 5 OF 5
SUPPORT I.D.: 1-CTSP-293-0154

APPENDIX D
Page 1 of 1

CONTINUATION SHEET

ATTACHMENT B
SHEET 6 OF 25

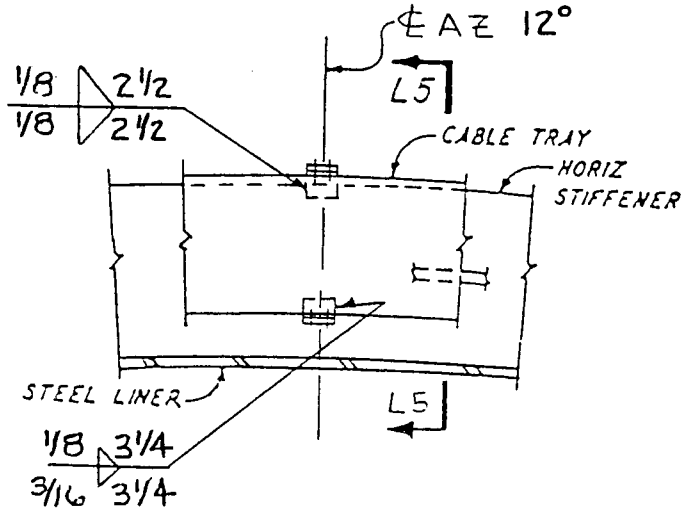

PLAN

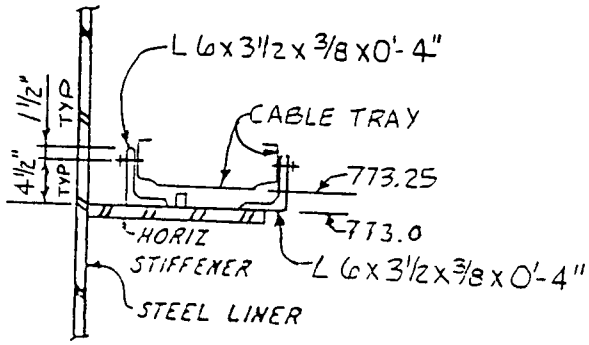

L5-L5

DET M5

THIS SHEET ADDED BY REV. 02

Completed By: Paul Olson / PAUL OLSON 02-22-91
Signature Print Date

Verified By: George Ghaly / GEORGE GHALY 2/22/91
Signature Print Date

B26 '91 0408 109

BRANCH/PROJECT ID: WCG-1-640

PACKAGE NO. CT-SB-H=063

PAGE 1 OF 5

QA Record

WBN
TI-2004
Revision 0
LOP

APPENDIX G
Page 1 of 1

WALKTHROUGH PACKAGE COVERSHEET

WATTS BAR UNIT - 1
CABLE TRAY/CABLE TRAY SUPPORTS
ENGINEERING WALKTHROUGH

ATTACHMENT 13
SHEET 7 OF 25

Walkthrough Team Member: Paul Olson / PAUL OLSON Date 02-22-91
Signature Print

Walkthrough Team Member: George Ghaly / GEORGE GHALY Date 2/22/91
Signature Print

Accepted by Walkthrough Team Coordinator: Alan Ketin / ALAN KETIN Date 3/21/91
Signature Print

List of Appendixes:

Appendix B or C C

Appendix F (Yes or No) NO

Appendix D (Yes or No) YES

Appendix H (Yes or No) NO

THIS SHEET ADDED BY REV. 02

BRANCH/PROJECT ID:
WCG - 1 - 640

WBN
TI-2004
Revision 0

PACKAGE NO. CT-SB-H-063
PAGE 5 OF 5
SUPPORT I.D.: 1-CTSP-293-0155 APPENDIX D
Page 1 of 1

CONTINUATION SHEET

ATTACHMENT B
SHEET 8 OF 25

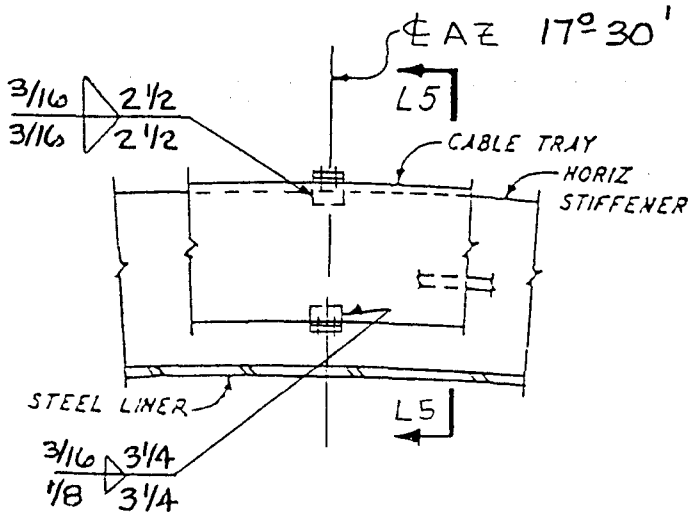

PLAN

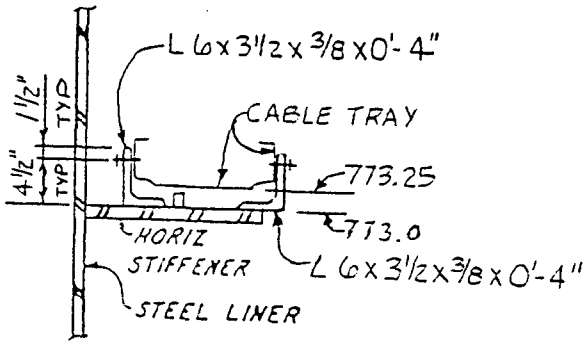

L5-L5

DET M5

THIS SHEET ADDED BY REV. 02

Completed By: Paul Olson / PAUL OLSON 02-22-91
Signature Print Date

Verified By: George Ghaly / GEORGE GHALY 2/22/91
Signature Print Date

B2E '91 0408 108
PACKAGE NO. CT-SB-H-064
PAGE 1 OF 5

BRANCH/PROJECT ID:
WCG-1-640

WBN
TI-2004
Revision 0
LOP

QA Record

APPENDIX G
Page 1 of 1

WALKTHROUGH PACKAGE COVERSHEET

ATTACHMENT B
SHEET 9 OF 25

WATTS BAR UNIT - 1
CABLE TRAY/CABLE TRAY SUPPORTS
ENGINEERING WALKTHROUGH

Walkthrough Team Member: Paul Olson / PAUL OLSON Date 02-22-91
Signature Print

Walkthrough Team Member: George Ghaly / GEORGE GHALY Date 2/22/91
Signature Print

Accepted by Walkthrough Team Coordinator: Alan Ketin / ALAN KETIN Date 3/21/91
Signature Print

List of Appendixes:

Appendix B or C C

Appendix F (Yes or No) NO

Appendix D (Yes or No) YES

Appendix H (Yes or No) NO

THIS SHEET ADDED BY REV. 02

BRANCH/PROJECT ID: WCG-1-640

WBN
TI-2004
Revision 0

PACKAGE NO. CT-SB-H-064
PAGE 5 OF 5
SUPPORT I.D.: 1-CTSP-293-0156

APPENDIX D
Page 1 of 1

CONTINUATION SHEET

ATTACHMENT B
SHEET 10 OF 25

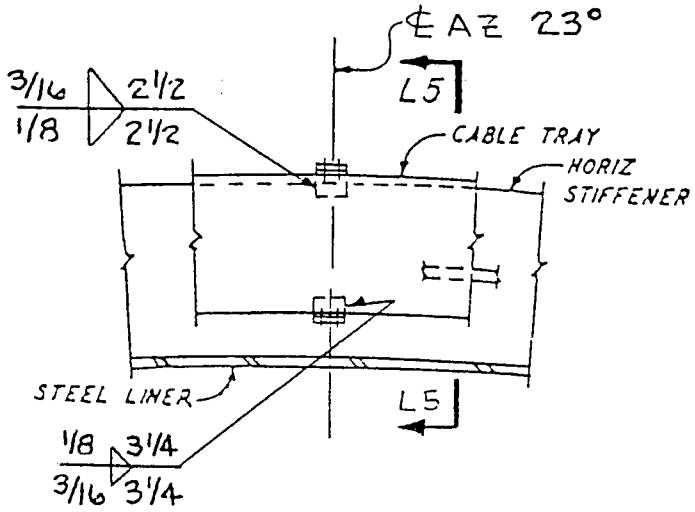

PLAN

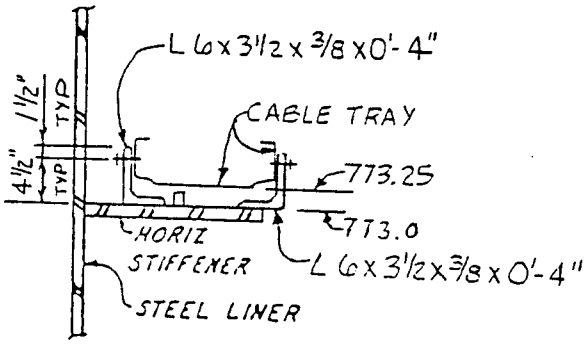

L5-L5

DET M5

THIS SHEET ADDED BY REV. 02

Completed By: Paul Olson / PAUL OLSON 02-22-91
Signature / Print / Date

Verified By: George Ghaly / GEORGE GHALY 2/22/91
Signature / Print / Date

B26 '91 0408 107

BRANCH/PROJECT ID: WCG-1-640

PACKAGE NO. CT-SB-H-065
PAGE 1 OF 6

WBN
TI-2004
Revision 0
LOP

QA Record

APPENDIX G
Page 1 of 1

WALKTHROUGH PACKAGE COVERSHEET

ATTACHMENT B
SHEET 11 OF 25

WATTS BAR UNIT - 1
CABLE TRAY/CABLE TRAY SUPPORTS
ENGINEERING WALKTHROUGH

Walkthrough Team Member: Paul Olson / PAUL OLSON (Signature / Print) Date 02-22-91

Walkthrough Team Member: George Ghaly / GEORGE GHALY (Signature / Print) Date 2/22/91

Accepted by Walkthrough Team Coordinator: Alan Ketin / ALAN KETIN (Signature / Print) Date 3/21/91

List of Appendixes:

Appendix B or C C

Appendix F (Yes or No) YES

Appendix D (Yes or No) YES

Appendix H (Yes or No) NO

THIS SHEET ADDED BY REV. 02

BRANCH/PROJECT ID:
WCG - 1 - 640

WBN
TI-2004
Revision 0

PACKAGE NO. CT-SB-H-065
PAGE 5 OF 6
SUPPORT I.D.: 1-CTSP-293-0157

APPENDIX D
Page 1 of 1

CONTINUATION SHEET

ATTACHMENT B
SHEET 12 OF 25

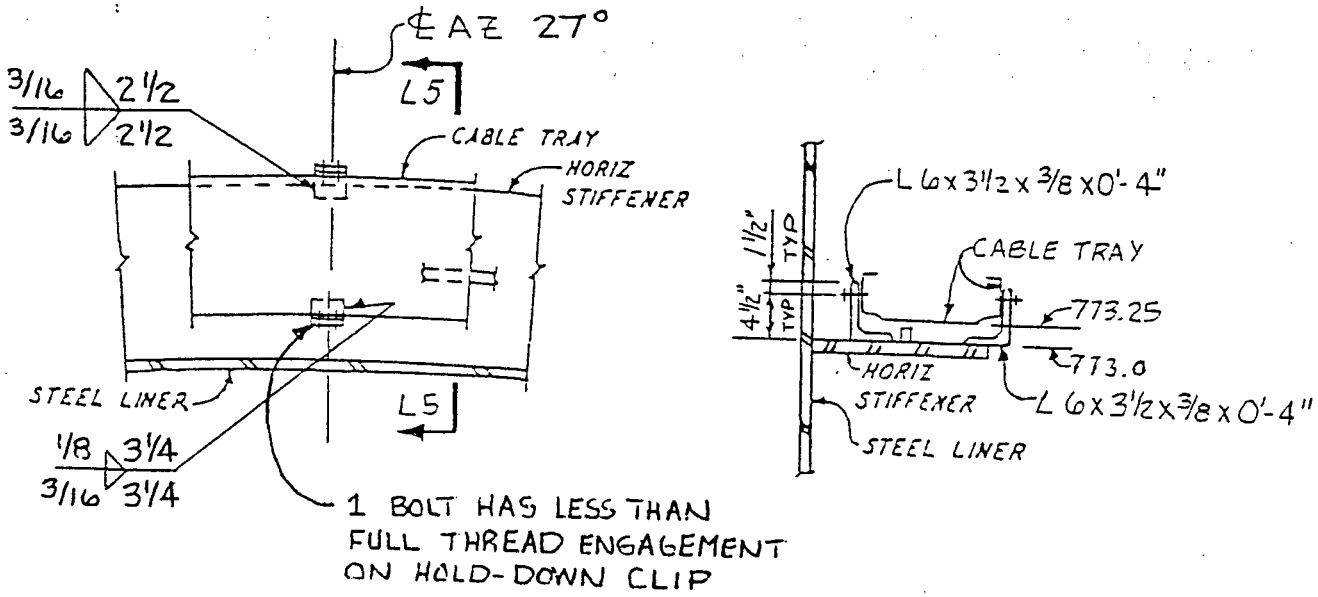

DET M5

THIS SHEET ADDED BY REV. 02

Completed By: Paul Olson / PAUL OLSON 02-22-91
Signature Print Date

Verified By: George Ghaly / GEORGE GHALY 2/22/91
Signature Print Date

B26 '91 0408 106 BRANCH/PROJECT ID:

PACKAGE NO. CT-SB-H-0266 WCG-1-640
PAGE 1 OF 5

WBN
TI-2004
Revision 0
LOP

QA Record

APPENDIX G
Page 1 of 1

WALKTHROUGH PACKAGE COVERSHEET

ATTACHMENT B
SHEET 13 OF 25

WATTS BAR UNIT - 1
CABLE TRAY/CABLE TRAY SUPPORTS
ENGINEERING WALKTHROUGH

Walkthrough Team Member: Paul Olson / PAUL OLSON Date 02-22-91
Signature Print

Walkthrough Team Member: George Ghaly / GEORGE GHALY Date 2/22/91
Signature Print

Accepted by Walkthrough Team Coordinator: Alan Ketin / ALAN KETIN Date 3/21/91
Signature Print

List of Appendixes:

Appendix B or C C

Appendix F (Yes or No) NO

Appendix D (Yes or No) YES

Appendix H (Yes or No) NO

THIS SHEET ADDED BY REV. 02

BRANCH/PROJECT ID: WCG-1-640

WBN
TI-2004
Revision 0

PACKAGE NO. CT-SB-H-066
PAGE 5 OF 5
SUPPORT I.D.: 1-CTSP-293-0158

APPENDIX D
Page 1 of 1

CONTINUATION SHEET

ATTACHMENT B
SHEET 14 OF 25

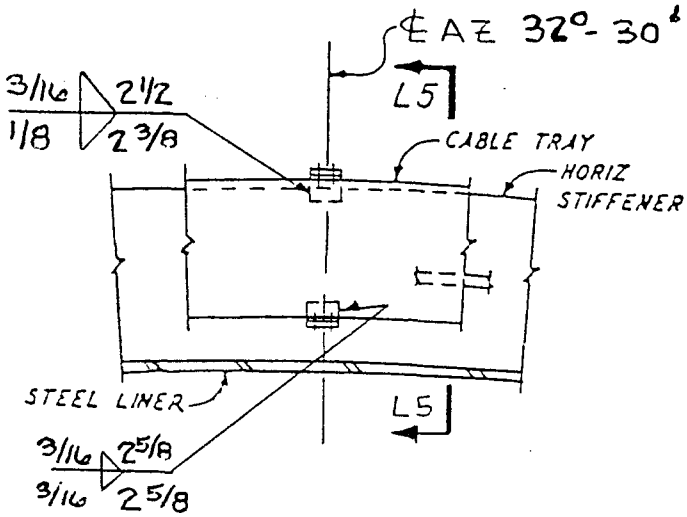

PLAN

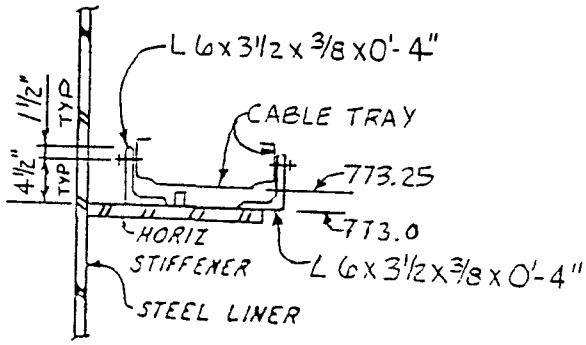

L5-L5

DET M5

THIS SHEET ADDED BY REV. 02

Completed By: Paul Olson / PAUL OLSON 02-22-91
Signature / Print / Date

Verified By: George Ghaly / GEORGE GHALY 2/22/91
Signature / Print / Date

B26 '91 0408 104 BRANCH/PROJECT ID: WCG-1-640

PACKAGE NO. CT-SB-H-068
PAGE 1 OF 5

WBN
TI-2004
Revision 0
LOP

QA Record

APPENDIX G
Page 1 of 1

WALKTHROUGH PACKAGE COVERSHEET

WATTS BAR UNIT - 1
CABLE TRAY/CABLE TRAY SUPPORTS
ENGINEERING WALKTHROUGH

ATTACHMENT B
SHEET 15 OF 25

Walkthrough Team Member: Paul Olson / PAUL OLSON Date 02-22-91
Signature Print

Walkthrough Team Member: George Ghaly / GEORGE GHALY Date 2/22/91
Signature Print

Accepted by Walkthrough Team Coordinator: Alan Ketin / ALAN KETIN Date 3/21/91
Signature Print

List of Appendixes:

Appendix B or C C

Appendix F (Yes or No) NO

Appendix D (Yes or No) YES

Appendix H (Yes or No) NO

THIS SHEET ADDED BY REV. 02

BRANCH/PROJECT ID: WCG-1-640

WBN
TI-2004
Revision 0

PACKAGE NO. CT-SB-H-068
PAGE 5 OF 5
SUPPORT I.D.: 1-CTSP-293-0521

APPENDIX D
Page 1 of 1

CONTINUATION SHEET

ATTACHMENT B
SHEET 16 OF 25

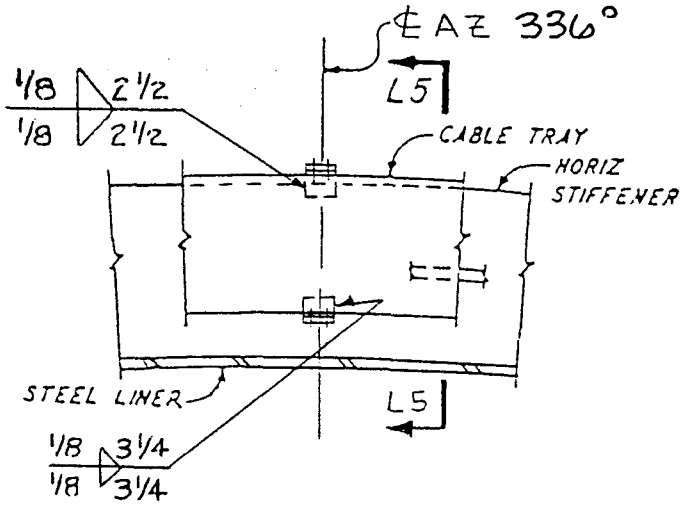

PLAN

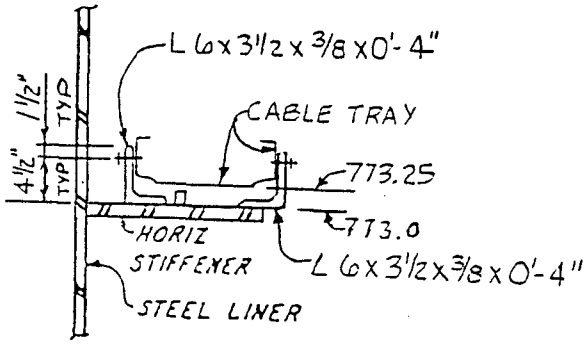

L5-L5

DET M5

THIS SHEET ADDED BY REV. 02

Completed By: Paul Olson / PAUL OLSON 07-22-91
Signature Print Date

Verified By: George G / GEORGE GHALY 2/22/91
Signature Print Date

B26 '91 0408 103

PACKAGE NO. CT-SB-H-069

PAGE 1 OF 6

BRANCH/PROJECT ID: WCG-1-640

WBN
TI-2004
Revision 0
LOP

QA Record

APPENDIX G
Page 1 of 1

WALKTHROUGH PACKAGE COVERSHEET

WATTS BAR UNIT - 1
CABLE TRAY/CABLE TRAY SUPPORTS
ENGINEERING WALKTHROUGH

ATTACHMENT B
SHEET 17 OF 25

Walkthrough Team Member: Paul Olson / PAUL OLSON Date 02-22-91
Signature Print

Walkthrough Team Member: George Ghaly / GEORGE GHALY Date 2/22/91
Signature Print

Accepted by Walkthrough Team Coordinator: Alan Ketin / ALAN KETIN Date 3/20/91
Signature Print

List of Appendixes:

Appendix B or C C

Appendix F (Yes or No) YES

Appendix D (Yes or No) YES

Appendix H (Yes or No) NO

THIS SHEET ADDED BY REV. 02

CONTINUATION SHEET

ATTACHMENT B
SHEET 18 OF 25

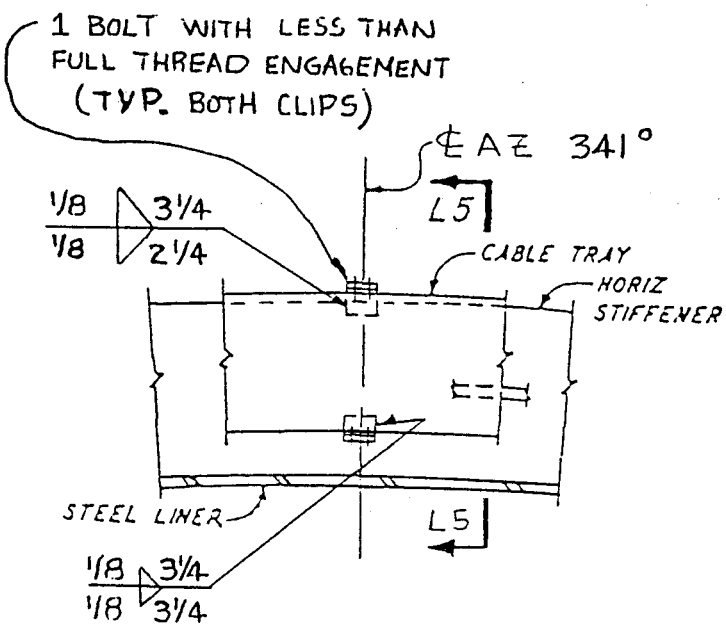

PLAN

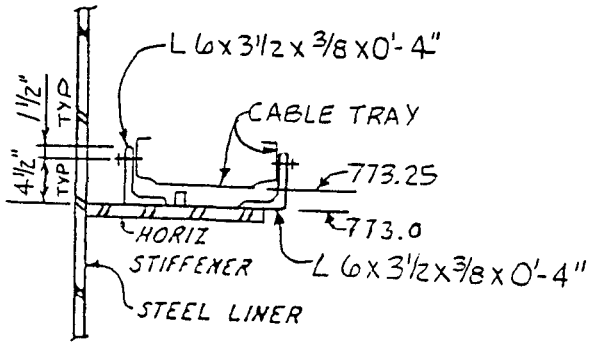

L5-L5

DET M5

THIS SHEET ADDED BY REV. 02

Completed By: Paul Olson / PAUL OLSON 02-22-91
Signature Print Date

Verified By: George G / GEORGE GHALY 2/22/91
Signature Print Date

QA Record BRANCH/PROJECT ID: WCG-1-640

TI-2022
Revision 0

CABLE TRAY SUPPORT NO. 1-CTSP-293-0539
PAGE 1 OF 2

APPENDIX C
Page 1 of 1

B18 '91 0625 417

WALKDOWN PACKAGE COVERSHEET

ATTACHMENT B
SHEET 19 OF 25

Watts Bar Nuclear Plant
Cable Tray Support Walkdown

Building SB

TRAY Elevation 773.25'

Prepared by: [signature] / GEORGE GHALY / 6/21/91
Signature / Print / Date

Verified by: [signature] / M. KAMBLE / 6/21/91
Signature / Print / Date

Task Walkdown Coordinator [signature] / ALAN D. KETIN / 6/24/91
Signature / Print / Date

Insulation/Firewrapping removed per _____

THIS SHEET ADDED BY REV. 02

CABLE TRAY SUPPORT NO. 1-CTSP-293-0539

PAGE 2 OF 2

ATTACHMENT B
SHEET 20 OF 25

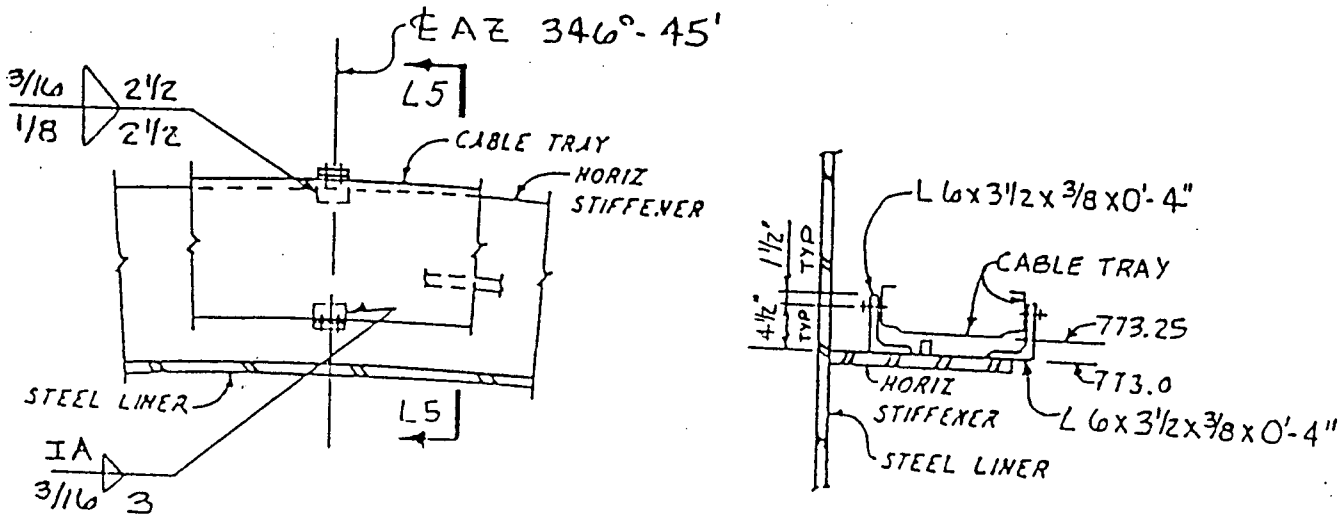

PLAN

L5-L5

DET M5

IA = INACCESSIBLE FOR VERIFICATION DUE TO INSUFFICIENT ACCESS.

THIS SHEET ADDED BY REV. 02

PREPARED BY: George Ghaly / GEORGE GHALY 6/21/91

VERIFIED BY: M. Kamble / M. KAMBLE 6/21/91

QA Record

TI-2022
Revision 0

BRANCH/PROJECT ID:
WCG-1-640

CABLE TRAY SUPPORT NO. 1-CTSP-293-0541
PAGE 1 OF 2

B18 '91 0625 418

APPENDIX C
Page 1 of 1

WALKDOWN PACKAGE COVERSHEET

ATTACHMENT B
SHEET 21 OF 25

Watts Bar Nuclear Plant
Cable Tray Support Walkdown

Building SB TRAY Elevation 773.25'

Prepared by: [signature] / GEORGE GHALY / 6/21/91
Signature Print Date

Verified by: [signature] / M. KAMBLE / 6/21/91
Signature Print Date

Task Walkdown Coordinator [signature] / ALAN D. KETIN / 6/24/91
Signature Print Date

Insulation/Firewrapping removed per _____

SUPERSEDED 7/3/91

THIS SHEET ADDED BY REV. 02

BRANCH/PROJECT ID:
WCG-1-640

WBN
TI-2022
Revision 0

QA Record

ORIGINAL

TI-2022
Revision 0

ATTACHMENT B
SH. 21 OF 25

CABLE TRAY SUPPORT NO. 1-CTSP-293-0541
PAGE 1 OF 23
wr 8/29/91

B18 '91 0625 418

APPENDIX C
Page 1 of 1

R1
wr 8-29-91

WALKDOWN PACKAGE COVERSHEET

B18 '91 0903 364 R1

Watts Bar Nuclear Plant
Cable Tray Support Walkdown

Building SB

TRAY Elevation 773.25'

	Signature	Print	Date
Prepared by:	Wayne G. Cornell	WAYNE G. CORNWELL	8-29-91
	George Ghalt	GEORGE GHALT	6/21/91
Verified by:	Lee R. Daniel	Lee R. Daniel	8/29/91
	M. Kamble	M. KAMBLE	6/21/91
Task Walkdown Coordinator	Tommy L. Hale	TOMMY L. HALE	8/29/91
	Alan D. Ketin	ALAN D. KETIN	6/24/91

Insulation/Firewrapping removed per N/A wr 8/29/91

THIS SHEET ADDED BY REV. 03

BRANCH/PROJECT ID:
WCG-1-640

CABLE TRAY SUPPORT NO. 1-CTSP-293-0541
PAGE 2 OF 2

ATTACHMENT 13
SHEET 22 OF 25

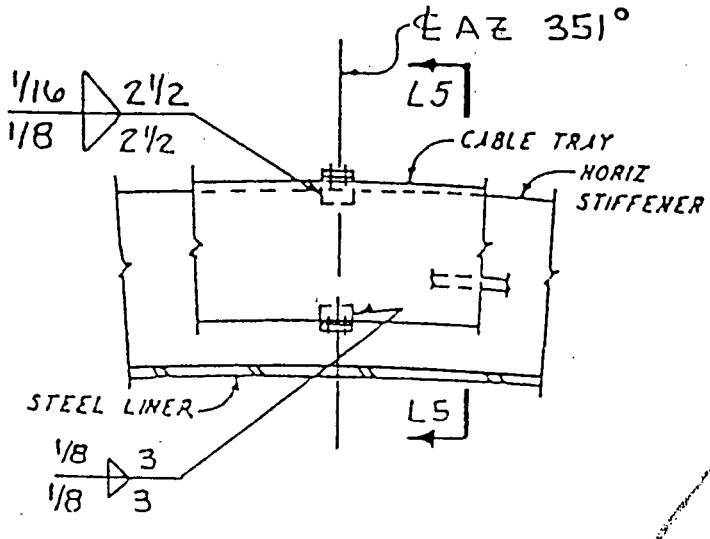

PLAN

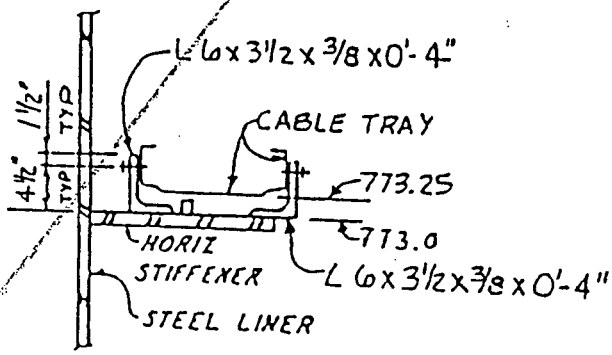

L5-L5

DET M5

SUPERSEDED
PSK 9/24/91

THIS SHEET ADDED BY REV. 02

PREPARED BY: [signature] / GEORGE GHAY 6/21/91

VERIFIED BY: [signature] / M. KAMBLE 6-21-91

CABLE TRAY SUPPORT NO. 1-CTSP-293-0541
PAGE 3 OF 3

APPENDIX H
Page 1 of 1

BRANCH/PROJECT ID:
WCG-1-640

CABLE TRAY SUPPORT WALKDOWN DATA SHEET

ATTACHMENT B
229 OF 25

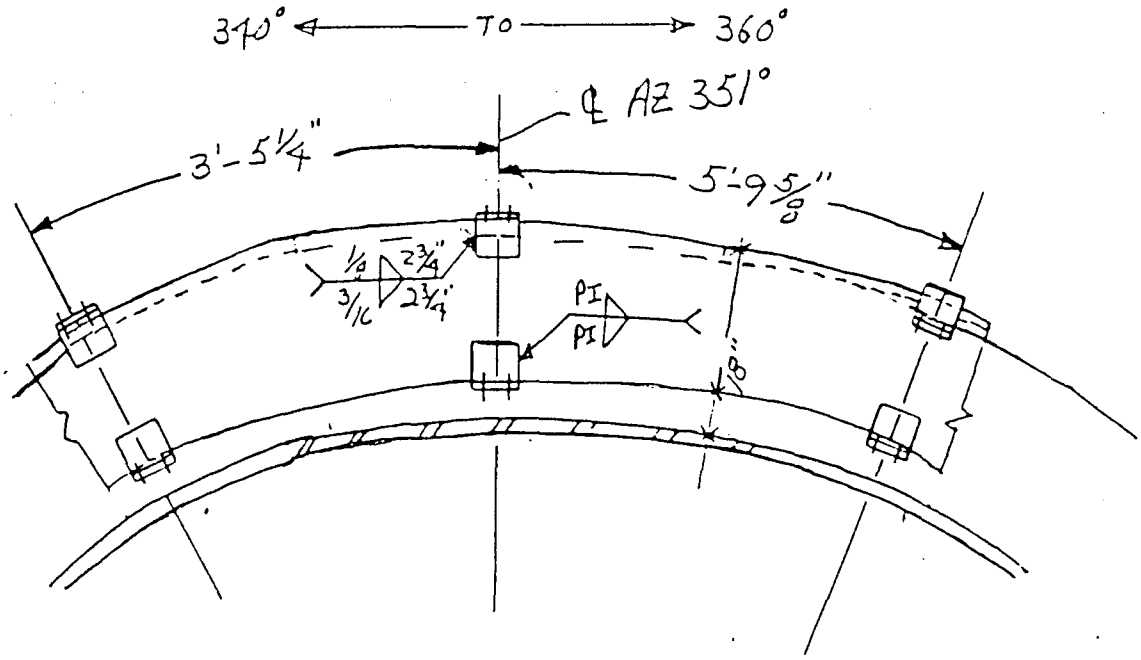

PLAN VIEW LOOKING DOWN

R1
8/29/91
8/29/91

Completed by Wayne G. Cornell 8/29/91
Signature Date

Verified by Lee R. Cornell 8/29/91
Signature Date

0100C

THIS SHEET ADDED BY REV. 03

PACKAGE NO. CT-SB-H-072
PAGE 1 OF 5

BRANCH/PROJECT ID: WCG-1-640

WBN
TI-2004
Revision 0
LOP

QA Record

B26 '91 0408 100

APPENDIX G
Page 1 of 1

WALKTHROUGH PACKAGE COVERSHEET

WATTS BAR UNIT - 1
CABLE TRAY/CABLE TRAY SUPPORTS
ENGINEERING WALKTHROUGH

ATTACHMENT B
SHEET 23 OF 25

Walkthrough Team Member: Paul Olson / PAUL OLSON Date 02-22-91
Signature Print

Walkthrough Team Member: George Ghaly / GEORGE GHALY Date 2/22/91
Signature Print

Accepted by Walkthrough Team Coordinator: Alan Ketin / ALAN KETIN Date 3/20/91
Signature Print

List of Appendixes:

Appendix B or C C

Appendix F (Yes or No) NO

Appendix D (Yes or No) YES

Appendix H (Yes or No) NO

THIS SHEET ADDED BY REV. 02

THIS SHEET ADDED BY REV. 02

BRANCH/PROJECT ID: WCG-1-640

WBN
TI-2004
Revision 0

PACKAGE NO. CT-SB-H-072
PAGE 5 OF 5
SUPPORT I.D.: 1-CTSP-293-0542

APPENDIX D
Page 1 of 1

CONTINUATION SHEET

ATTACHMENT B
SHEET 24 OF 25

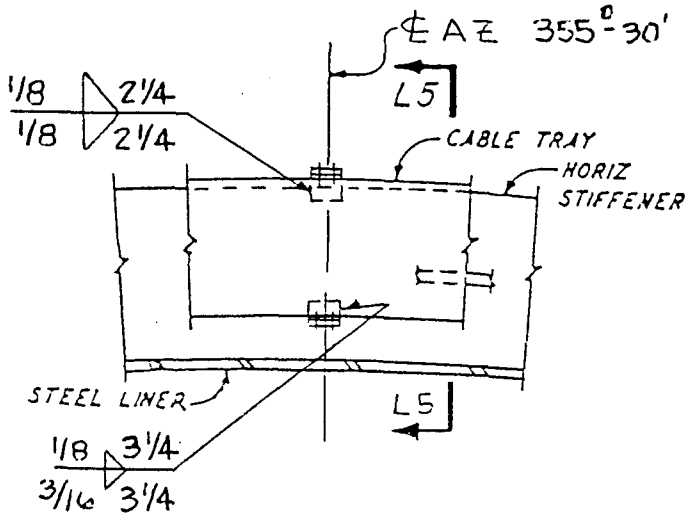

PLAN

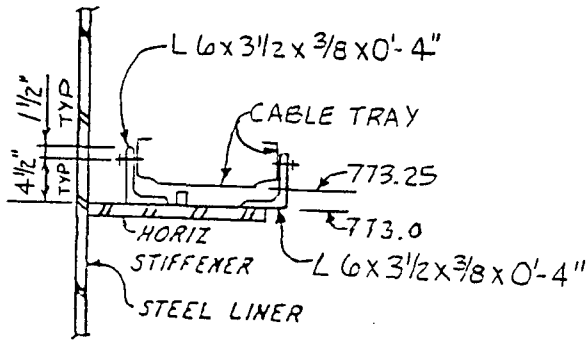

L5-L5

DET M5

THIS SHEET ADDED BY REV. 02

Completed By: Paul Olson / PAUL OLSON 02-22-91
Signature Print Date

Verified By: George Ghaly / GEORGE GHALY 2/22/91
Signature Print Date

BRANCH/PROJECT ID:
WCG-1-640

EBASCO SERVICES INCORPORATED
BRANCH /PROJECT ID:

BY [illegible] DATE 6/24/91 SHEET NR OF NR
CHKD BY PSPatel DATE 7/3/91 OFS NO. NR DEPT NO. N
CLIENT TVA
PROJECT WBNP/UNIT-1
SUBJECT CALCULATION FOR CABLE TRAY SUPPORT NO. 1-CTSP-293-158(DET. M5)

REV. 03
CALC. BY PSPatel 9/24/91
CHECKED BY [illegible] 9/26/91

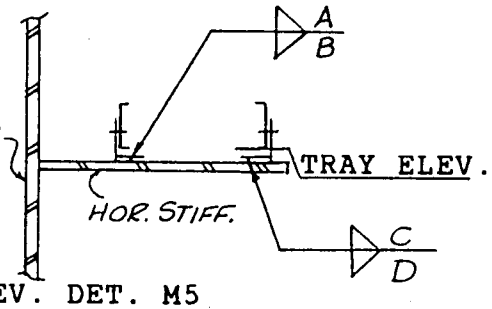

ELEV. DET. M5

ATTACHMENT B
SHEET 25 OF 25

THIS SHEET ADDED BY REV. 02

SUPPORT I.D. 1-CTSP-293-	TRAY ELEV. (ft)	AZ	FILLET WELD(SIZE X LENGTH)			
			A	B	C	D
152	773.25	1°-0'	3/16 x 3 1/8	3/16 x 3 1/4	3/16 x 2 1/2	3/16 x 2 1/2
153	773.25	5°-30'	1/8 x 3 1/4	1/8 x 3 1/4	1/8 x 2 1/2	3/16 x 2 1/2
154	773.25	12°-0'	1/8 x 3 1/4	3/16 x 3 1/4	1/8 x 2 1/2	1/8 x 2 1/2
155	773.25	17°-30'	3/16 x 3 1/4	1/8 x 3 1/4	3/16 x 2 1/2	3/16 x 2 1/2
156	773.25	23°-0'	1/8 x 3 1/4	3/16 x 3 1/4	3/16 x 2 1/2	1/8 x 2 1/2
157	773.25	27°-0'	1/8 x 3 1/4	3/16 x 3 1/4	3/16 x 2 1/2	3/16 x 2 1/2
158	773.25	32°-30'	3/16 x 2 5/8	3/16 x 2 5/8	3/16 x 2 1/2	1/8 x 2 3/8
521	773.25	336°-0'	1/8 x 3 1/4	1/8 x 3 1/4	1/8 x 2 1/2	1/8 x 2 1/2
536	773.25	341°-0'	1/8 x 3 1/4	1/8 x 3 1/4	1/8 x 2 1/4	1/8 x 3 1/4
539	773.25	346°-45'	INACCESS-ABLE	3/16 x 3	3/16 x 2 1/2	1/8 x 2 1/2
541	773.25	351°-0'	PI 1/8 x 3	PI 1/8 x 3	~~1/16 x 2 1/2~~ 1/8 x 2 1/4	~~1/8 x 2 1/2~~ 3/16 x 2 1/4
542	773.25	355°-30'	1/8 x 3 1/4	3/16 x 3 1/4	1/8 x 2 1/4	1/8 x 2 1/4

R3

BRANCH/PROJECT ID: WCG-1-640

EBASCO SERVICES INCORPORATED

BY: G. Grady DATE 7/2/91

CHKD. BY: P. Patel DATE 7/3/91

ATTACHMENT C
SHEET 1 OF 4

SHEET 1 OF 4

OFS NO. NR

DEPT. NO. NR

CLIENT TVA

PROJECT WBNP / UNIT-1

SUBJECT CRITICAL CASE SELECTION FOR SUPPORTS ATTACHED TO SCV

SUMMARY OF METHODOLOGY **THIS SHEET ADDED BY REV. 02**

1 TOTAL POPULATION SUPPORTS EVALUATED 180

2 THE NUMBER OF DRAWINGS REVIEWED.

DRW'S 48W970-1 TO 48W970-5

3 DRAWING REVIEW RESULTED IN 7 CRITICAL CASES

WHICH BOUNDED REMAING POPULATION OF SUPPORTS.

4. TYPES OF 7 CRITCAL CASES & BOUNDED SUPPORTS.

TYPE OF DET.	CALC. NO FOR CRITICAL CASE	POPULATION OF SUPP. BOUNDED W/CRITICAL CASE	REF. DWG
M5	WCG-1-640	12	48W970-1 TO 48W970-5
J5	WCG-1-641	137	
MK-18 MK-19	WCG-1-642	3	
N5, L5	WCG-1-643	3	
K5	WCG-1-644	15	
MK-17	WCG-1-645	1	
MK-11 TH MK16 & MK20	WCG-1-646	10	
		181 *	

* ONE SUPPORT CONSTISTS OF HOLD DOWN CLIP ANGLE ONLY AND WILL BE QUALIFIED IN CALC. NO 50054-01C 001

581 2-88

BRANCH/PROJECT ID: WCG-1-640

EBASCO SERVICES INCORPORATED

BY G. Ghosh DATE 7/2/91

CHKD. BY PS Pandey DATE 7/3/91

ATTACHMENT C
SHEET 2 OF 4

SHEET 2 OF 4

OFS NO. NR DEPT. NO. NR

CLIENT TVA

PROJECT WBNP / UNIT-1

SUBJECT CRITICAL CASE SELECTION FOR SUPPORTS ATTACHED TO SCV

SUMMARY OF METHODOLOGY - CONT.

3. CRITICAL ATTRIBUTES TO BE CONSIDERED FOR EVALUATIONS,

i) MAX CANTILEVER LENGTH OF MEMBER

ii) MIN. WELD PROPERTIES.

iii) TRAY LOCATION (ELEVATION & AZIMUTH) TO PRODUCE MAX 'G' VALUES

(iv) MAX. AS BUILT TRAY SPAN

(v) LARGEST CABLE TRAY SIZE

4. WALKTHROUGH 100% POPULATION OF SUPPORTS TO CONFIRM SELECTION PROCESS OF 7 CRITICAL CASES WHICH BOUNDED THE REMAING POPULATION OF SUPPORTS.

5. WALKDOWN SUPPORTS WITH CRITICAL ATTRIBUTES FOR AS-BUILT CONDITIONS TO BE USED AS INPUT FOR ENGINEERING REEVALUATION OF 7 CRITICAL CASES.

THIS SHEET ADDED BY REV. 02

BRANCH/PROJECT ID: WCG-1-640

EBASCO SERVICES INCORPORATED

BY G.G. Mody DATE 7/2/91

CHKD. BY PS Patil DATE 7/3/91

ATTACHMENT C SHEET 3 OF 4

SHEET 3 OF 4

OFS NO. NR DEPT. NO. NR

CLIENT TVA

PROJECT WBNP / UNIT-1

SUBJECT CRITICAL CASE SELECTION FOR SUPPORTS ATTACHED TO SCV

SUMMARY OF METHODOLOGY - CONT

6 EACH BOUNDING CASE IS EVALUATED AS A SEPARATE CALCULATION.

7 CONCLUSION FOR STRUCTURAL ADEQUECY FOR EACH CALCULATION IS RECORDED.

8 ISSUE MODIFICATION (DCN'S) FOR FAILING CASES.

9 EVALUATE NEXT WORST CASE WITHIN THE GROUP WHEN BOUNDING CASE FAILS.

10 GO BACK TO STEP 7

11 CONTINUE PROCESS UNTIL ALL SUPPORTS ATTACHED TO SCV ARE QUALIFIED.

THIS SHEET ADDED BY REV. 02

581 2-88

BRANCH/PROJECT ID:
WCG-1-640

ATTACHMENT C
SHEET 4 OF 4

SHEET 4 OF 4
BY [illegible] DATE 7/2/91
CHKD BY PSPatel DATE 7/3/91
CLIENT TVA PROJECT WBND UNIT-1

FLOW CHART FOR QUALIFICATION OF CABLE TRAY SUPPORTS ATTACHED TO SCV

PWL: WF

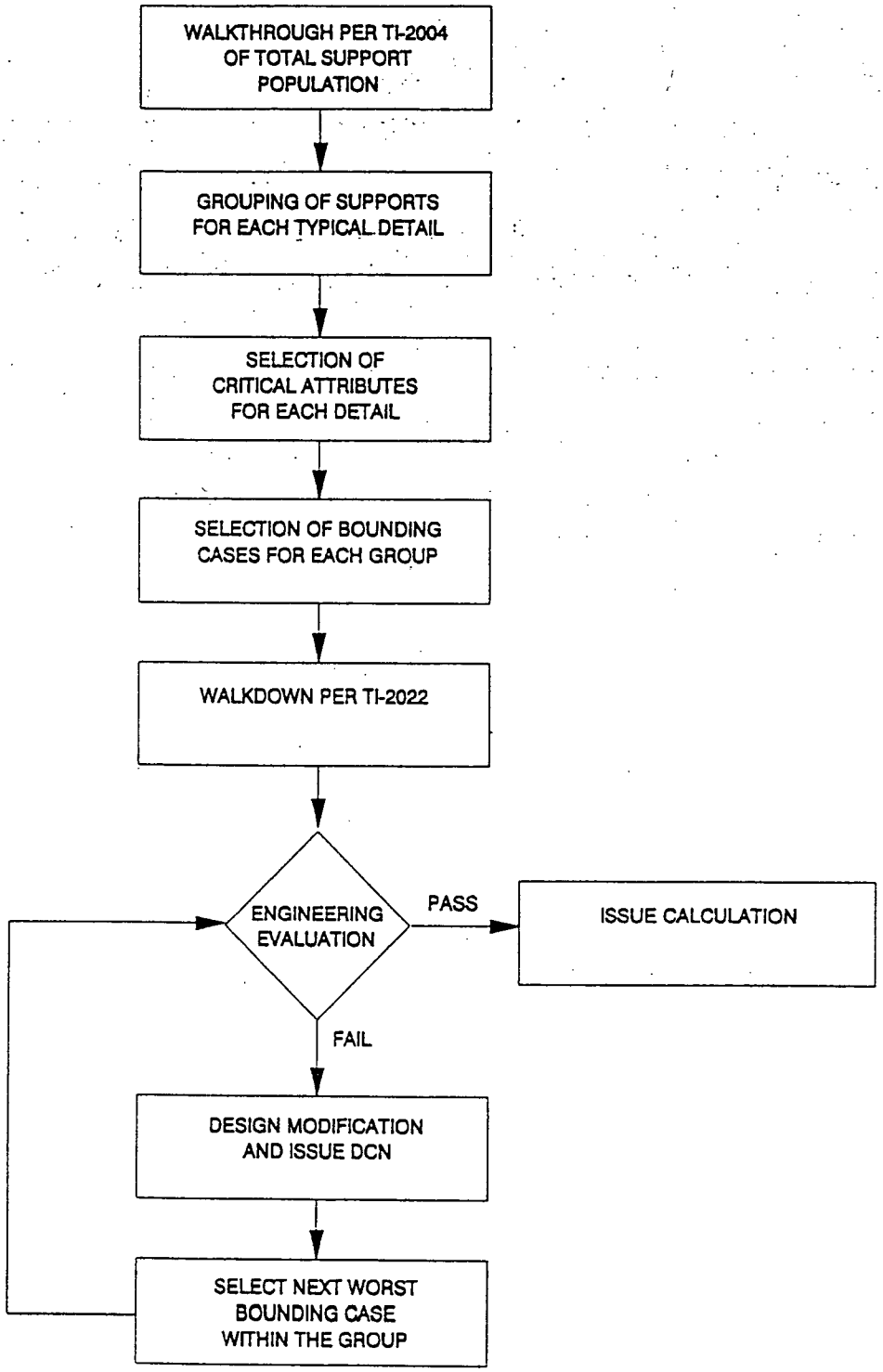

JDS 7/12/91
(WFQF1.DRW)

THIS SHEET ADDED BY REV. 02

BRANCH/PROJECT ID: WCG-1-640

EBASCO SERVICES INCORPORATED

BY G. Gindy DATE 6/24/91

CHKD. BY PS Patel DATE 7/3/91

ATTACHMENT D SHEET 1 OF 4

SHEET 1 OF 4

OFS NO. NR DEPT. NO. NR

CLIENT TVA

PROJECT WBNP/UNIT-1

SUBJECT DATA BASE OF SUPPORTS ATTACHED TO SCV

WALKTHROUGH PACKAGE NO	HGR NO	CALC NO	SUP'T MARK NO	ELEV	AZIMUTH
CT-SB-I-008	1-CTSP-293-0220	WCG-1-641R0	J5	712.50	4.50
CT-SB-I-008	1-CTSP-293-0220	WCG-1-641R0	J5	710.50	4.50
CT-SB-I-008	1-CTSP-293-0220	WCG-1-641R0	J5	708.83	4.50
CT-SB-I-008	1-CTSP-293-0220	WCG-1-641R0	J5	707.33	4.50
CT-SB-I-008	1-CTSP-293-0220	WCG-1-641R0	J5	705.33	4.50
CT-SB-I-008	1-CTSP-293-0220	WCG-1-641R0	J5	714.50	4.50
CT-SB-I-009	1-CTSP-293-0221	WCG-1-641R0	J5	714.50	9.50
CT-SB-I-009	1-CTSP-293-0221	WCG-1-641R0	J5	712.50	9.50
CT-SB-I-009	1-CTSP-293-0221	WCG-1-641R0	J5	710.50	9.50
CT-SB-I-009	1-CTSP-293-0221	WCG-1-641R0	J5	708.83	9.50
CT-SB-I-009	1-CTSP-293-0221	WCG-1-641R0	J5	707.33	9.50
CT-SB-I-009	1-CTSP-293-0221	WCG-1-641R0	J5	705.33	9.50
CT-SB-I-010	1-CTSP-293-0222	WCG-1-641R0	J5	714.50	14.50
CT-SB-I-010	1-CTSP-293-0222	WCG-1-641R0	J5	712.50	14.50
CT-SB-I-010	1-CTSP-293-0222	WCG-1-641R0	J5	710.50	14.50
CT-SB-I-010	1-CTSP-293-0222	WCG-1-641R0	J5	708.83	14.50
[illegible]T-SB-I-010	1-CTSP-293-0222	WCG-1-641R0	J5	707.33	14.50
[illegible]-SB-I-010	1-CTSP-293-0222	WCG-1-641R0	J5	705.33	14.50
[illegible]-SB-I-011	1-CTSP-293-0223	WCG-1-641R0	J5	714.50	20.50
CT-SB-I-011	1-CTSP-293-0223	WCG-1-641R0	J5	712.50	20.50
CT-SB-I-011	1-CTSP-293-0223	WCG-1-641R0	J5	710.50	20.50
CT-SB-I-011	1-CTSP-293-0223	WCG-1-641R0	J5	708.83	20.50
CT-SB-I-011	1-CTSP-293-0223	WCG-1-641R0	J5	707.33	20.50
CT-SB-I-011	1-CTSP-293-0223	WCG-1-641R0	J5	705.33	20.50
CT-SB-I-012	1-CTSP-293-0224	WCG-1-641R0	J5	714.50	24.50
CT-SB-I-012	1-CTSP-293-0224	WCG-1-641R0	J5	710.50	24.50
CT-SB-I-012	1-CTSP-293-0224	WCG-1-641R0	J5	708.83	24.50
CT-SB-I-012	1-CTSP-293-0224	WCG-1-641R0	J5	707.33	24.50
CT-SB-I-012	1-CTSP-293-0224	WCG-1-641R0	J5	705.33	24.50
CT-SB-I-013	1-CTSP-293-0225	WCG-1-641R0	J5	714.50	29.50
CT-SB-I-013	1-CTSP-293-0225	WCG-1-641R0	J5	710.50	29.50
CT-SB-I-013	1-CTSP-293-0225	WCG-1-641R0	J5	708.83	29.50
CT-SB-I-013	1-CTSP-293-0225	WCG-1-641R0	J5	707.33	29.50
CT-SB-I-013	1-CTSP-293-0225	WCG-1-641R0	J5	705.33	29.50
CT-SB-I-014	1-CTSP-293-0226	WCG-1-641R0	J5	714.50	34.50
CT-SB-I-014	1-CTSP-293-0226	WCG-1-641R0	J5	710.50	34.50
CT-SB-I-014	1-CTSP-293-0226	WCG-1-641R0	J5	708.00	34.50
CT-SB-I-014	1-CTSP-293-0226	WCG-1-641R0	J5	705.33	34.50
CT-SB-I-015	1-CTSP-293-0227	WCG-1-641R0	J5	708.00	39.50
CT-SB-I-015	1-CTSP-293-0227	WCG-1-641R0	J5	705.33	39.50
CT-SB-I-016	1-CTSP-293-0228	WCG-1-641R0	J5	710.00	44.50
CT-SB-I-016	1-CTSP-293-0228	WCG-1-641R0	J5	708.00	44.50
CT-SB-I-016	1-CTSP-293-0228	WCG-1-641R0	J5	705.33	44.50
CT-SB-I-017	1-CTSP-293-0229	WCG-1-641R0	J5	710.50	49.50
CT-SB-I-017	1-CTSP-293-0229	WCG-1-641R0	J5	708.00	49.50
[illegible]T-SB-I-017	1-CTSP-293-0229	WCG-1-641R0	J5	705.33	49.50
[illegible]-SB-I-018	1-CTSP-293-0230	WCG-1-641R0	J5	711.50	54.50
[illegible]T-SB-I-018	1-CTSP-293-0230	WCG-1-641R0	J5	710.00	54.50
CT-SB-I-018	1-CTSP-293-0230	WCG-1-641R0	J5	708.00	54.50

THIS SHEET ADDED BY REV. 02

BRANCH/PROJECT ID:
WCG-1-640

EBASCO SERVICES INCORPORATED

BY [illegible] DATE 6/24/91
CHKD. BY PSPatel DATE 7/3/91
CLIENT TVA

ATTACHMENT D
SHEET 2 OF 4

SHEET 2 OF 4
OFS NO. NR
DEPT. NO. NR

PROJECT WBNP/UNIT-1

SUBJECT DATA BASE OF SUPPORTS ATTACHED TO SCV

WALKTHROUGH PACKAGE NO	HGR NO	CALC NO	SUPPT MARK NO	ELEV	AZIMUTH
CT-SB-I-019	1-CTSP-293-0231	WCG-1-641R0	J5	711.50	59.50
CT-SB-I-019	1-CTSP-293-0231	WCG-1-641R0	J5	710.00	59.50
CT-SB-I-019	1-CTSP-293-0231	WCG-1-641R0	J5	708.00	59.50
CT-SB-I-020	1-CTSP-293-0232	WCG-1-641R0	J5	710.00	64.30
CT-SB-I-020	1-CTSP-293-0232	WCG-1-641R0	J5	708.00	64.30
CT-SB-I-020	1-CTSP-293-0232	WCG-1-641R0	J5	705.33	64.30
CT-SB-I-021	1-CTSP-293-0233	WCG-1-641R0	J5	710.00	69.30
CT-SB-I-021	1-CTSP-293-0233	WCG-1-641R0	J5	708.00	69.30
CT-SB-I-021	1-CTSP-293-0233	WCG-1-641R0	J5	705.33	69.30
CT-SB-I-022	1-CTSP-293-0234	WCG-1-641R0	J5	710.00	74.30
CT-SB-I-022	1-CTSP-293-0234	WCG-1-641R0	J5	708.00	74.30
CT-SB-I-022	1-CTSP-293-0234	WCG-1-641R0	J5	705.33	74.30
CT-SB-I-023	1-CTSP-293-0235	WCG-1-641R0	J5	710.00	79.30
CT-SB-I-023	1-CTSP-293-0235	WCG-1-641R0	J5	708.00	79.30
CT-SB-I-023	1-CTSP-293-0235	WCG-1-641R0	J5	705.33	79.30
CT-SB-I-024	1-CTSP-293-0236	WCG-1-641R0	J5	710.00	84.50
CT-SB-I-024	1-CTSP-293-0236	WCG-1-641R0	J5	708.00	84.50
[illegible]-SB-I-024	1-CTSP-293-0236	WCG-1-641R0	J5	705.33	84.50
[illegible]-SB-I-025	1-CTSP-293-0237	WCG-1-641R0	J5	710.00	89.50
[illegible]T-SB-I-025	1-CTSP-293-0237	WCG-1-641R0	J5	708.00	89.50
CT-SB-I-025	1-CTSP-293-0237	WCG-1-641R0	J5	705.33	89.50
CT-SB-I-026	1-CTSP-293-0238	WCG-1-641R0	J5	710.00	94.50
CT-SB-I-026	1-CTSP-293-0238	WCG-1-641R0	J5	708.00	94.50
CT-SB-I-026	1-CTSP-293-0238	WCG-1-641R0	J5	705.33	94.50
CT-SB-I-027	1-CTSP-293-0239	WCG-1-641R0	J5	708.00	99.50
CT-SB-I-027	1-CTSP-293-0239	WCG-1-641R0	J5	705.33	99.50
CT-SB-I-028	1-CTSP-293-0240	WCG-1-641R0	J5	705.33	104.50
CT-SB-I-029	1-CTSP-293-0241	WCG-1-641R0	J5	705.33	109.50
CT-SB-I-030	1-CTSP-293-0242	WCG-1-641R0	J5	705.33	114.50
CT-SB-I-031	1-CTSP-293-0243	WCG-1-641R0	J5	705.33	119.50
CT-SB-I-032	1-CTSP-293-0279	WCG-1-641R0	J5	714.50	329.50
CT-SB-I-032	1-CTSP-293-0279	WCG-1-641R0	J5	712.50	329.50
CT-SB-I-032	1-CTSP-293-0279	WCG-1-641R0	J5	710.50	329.50
CT-SB-I-032	1-CTSP-293-0279	WCG-1-641R0	J5	708.83	329.50
CT-SB-I-032	1-CTSP-293-0279	WCG-1-641R0	J5	707.33	329.50
CT-SB-I-032	1-CTSP-293-0279	WCG-1-641R0	J5	705.33	329.50
CT-SB-I-033	1-CTSP-293-0278	WCG-1-641R0	J5	714.50	334.50
CT-SB-I-033	1-CTSP-293-0278	WCG-1-641R0	J5	712.50	334.50
CT-SB-I-033	1-CTSP-293-0278	WCG-1-641R0	J5	710.50	334.50
CT-SB-I-033	1-CTSP-293-0278	WCG-1-641R0	J5	708.83	334.50
CT-SB-I-033	1-CTSP-293-0278	WCG-1-641R0	J5	707.33	334.50
CT-SB-I-033	1-CTSP-293-0278	WCG-1-641R0	J5	705.33	334.50
CT-SB-I-034	1-CTSP-293-0277	WCG-1-641R0	J5	714.50	339.50
CT-SB-I-034	1-CTSP-293-0277	WCG-1-641R0	J5	712.50	339.50
CT-SB-I-034	1-CTSP-293-0277	WCG-1-641R0	J5	710.50	339.50
CT-SB-I-034	1-CTSP-293-0277	WCG-1-641R0	J5	708.83	339.50
[illegible]-SB-I-034	1-CTSP-293-0277	WCG-1-641R0	J5	707.33	339.50
[illegible]-SB-I-034	1-CTSP-293-0277	WCG-1-641R0	J5	705.33	339.50
CT-SB-I-035	1-CTSP-293-0281	WCG-1-641R0	J5	714.50	325.00
CT-SB-I-035	1-CTSP-293-0281	WCG-1-641R0	J5	712.50	325.00

THIS SHEET ADDED BY REV. 02

BRANCH/PROJECT ID:
WCG-1-640

EBASCO SERVICES INCORPORATED

BY [illegible] DATE 6/24/91
CHKD. BY PS Patel DATE 7/3/91

ATTACHMENT D
SHEET 3 OF 4

SHEET 3 OF 4
OFS NO. NR
DEPT. NO. NR

CLIENT TVA
PROJECT WBNP/UNIT-1
SUBJECT DATA BASE OF SUPPORT ATTACHED TO SCV

WALKTHROUGH PACKAGE NO	HGR NO	CALC NO	SUPP'T MARK NO	ELEV	AZIMUTH
CT-SB-I-035	1-CTSP-293-0281	WCG-1-641R0	J5	710.50	325.00
CT-SB-I-035	1-CTSP-293-0281	WCG-1-641R0	J5	708.83	325.00
CT-SB-I-035	1-CTSP-293-0281	WCG-1-641R0	J5	707.33	325.00
CT-SB-I-035	1-CTSP-293-0281	WCG-1-641R0	J5	705.33	325.00
CT-SB-I-035	1-CTSP-293-0281	WCG-1-641R0	J5	708.83	319.50
CT-SB-I-035	1-CTSP-293-0281	WCG-1-641R0	J5	707.33	319.50
CT-SB-I-035	1-CTSP-293-0281	WCG-1-641R0	J5	705.33	319.50
CT-SB-I-035	1-CTSP-293-0281	WCG-1-642R0	MK19	713.00	319.50
CT-SB-I-035	1-CTSP-293-0281	WCG-1-645R0	MK17	710.83	319.50
CT-SB-I-036	1-CTSP-293-0276	WCG-1-641R0	J5	714.50	344.50
CT-SB-I-036	1-CTSP-293-0276	WCG-1-641R0	J5	712.50	344.50
CT-SB-I-036	1-CTSP-293-0276	WCG-1-641R0	J5	710.50	344.50
CT-SB-I-036	1-CTSP-293-0276	WCG-1-641R0	J5	708.83	344.50
CT-SB-I-036	1-CTSP-293-0276	WCG-1-641R0	J5	707.33	344.50
CT-SB-I-036	1-CTSP-293-0276	WCG-1-641R0	J5	705.33	344.50
CT-SB-I-037	1-CTSP-293-0275	WCG-1-641R0	J5	714.50	349.50
CT-SB-I-037	1-CTSP-293-0275	WCG-1-641R0	J5	712.50	349.50
CT-SB-I-037	1-CTSP-293-0275	WCG-1-641R0	J5	710.50	349.50
CT-SB-I-037	1-CTSP-293-0275	WCG-1-641R0	J5	708.83	349.50
CT-SB-I-037	1-CTSP-293-0275	WCG-1-641R0	J5	707.33	349.50
CT-SB-I-037	1-CTSP-293-0275	WCG-1-641R0	J5	705.33	349.50
CT-SB-I-038	1-CTSP-293-0284	WCG-1-641R0	J5	714.50	354.50
CT-SB-I-038	1-CTSP-293-0284	WCG-1-641R0	J5	712.50	354.50
CT-SB-I-038	1-CTSP-293-0284	WCG-1-641R0	J5	710.50	354.50
CT-SB-I-038	1-CTSP-293-0284	WCG-1-641R0	J5	708.83	354.50
CT-SB-I-038	1-CTSP-293-0284	WCG-1-641R0	J5	707.33	354.50
CT-SB-I-038	1-CTSP-293-0284	WCG-1-641R0	J5	705.33	354.50
CT-SB-I-039	1-CTSP-293-0283	WCG-1-641R0	J5	714.50	359.50
CT-SB-I-039	1-CTSP-293-0283	WCG-1-641R0	J5	712.50	359.50
CT-SB-I-039	1-CTSP-293-0283	WCG-1-641R0	J5	710.50	359.50
CT-SB-I-039	1-CTSP-293-0283	WCG-1-641R0	J5	708.83	359.50
CT-SB-I-039	1-CTSP-293-0283	WCG-1-641R0	J5	707.33	359.50
CT-SB-I-039	1-CTSP-293-0283	WCG-1-641R0	J5	705.33	359.50
CT-SB-I-040	1-CTSP-293-0282	WCG-1-641R0	J5	708.83	314.50
CT-SB-I-040	1-CTSP-293-0282	WCG-1-641R0	J5	707.33	314.50
CT-SB-I-040	1-CTSP-293-0282	WCG-1-641R0	J5	705.33	314.50
CT-SB-I-040	1-CTSP-293-0282	WCG-1-641R0	J5	705.33	309.50
CT-SB-I-040	1-CTSP-293-0282	WCG-1-646R0	MK13	713.00	314.50
CT-SB-I-040	1-CTSP-293-0282	WCG-1-646R0	MK13	711.17	314.50
CT-SB-I-040	1-CTSP-293-0282	WCG-1-646R0	MK16	707.42	314.50
CT-SB-I-040	1-CTSP-293-0282	WCG-1-642R0	MK18	713.00	309.50
CT-SB-I-040	1-CTSP-293-0282	WCG-1-642R0	MK18	709.67	309.50
CT-SB-I-041	1-CTSP-293-0312	WCG-1-641R0	J5	705.33	304.50
CT-SB-I-042	1-CTSP-293-0315	WCG-1-641R0	J5	705.33	298.00
CT-SB-I-043	1-CTSP-293-0316	WCG-1-641R0	J5	705.33	294.50
CT-SB-I-044	1-CTSP-293-0340	WCG-1-646R0	MK20	716.00	254.50
CT-SB-I-044	1-CTSP-293-0340	WCG-1-646R0	MK11	711.75	254.50
CT-SB-I-044	1-CTSP-293-0340	WCG-1-646R0	MK12	706.92	254.50
CT-SB-I-044	1-CTSP-293-0340	WCG-1-644R0	K5	710.00	249.50

THIS SHEET ADDED BY REV. 02

BRANCH/PROJECT ID:
WCG-1-640

EBASCO SERVICES INCORPORATED

BY G. Ghosh DATE 6/24/91
CHKD. BY PSPatel DATE 7/3/91

ATTACHMENT D
SHEET 4 OF 4

SHEET 4 OF 4
OFS NO. NR
DEPT. NO. NR

CLIENT TVA
PROJECT WBNP/UNIT-1
SUBJECT DATA BASE OF SUPPORT ATTACHED TO SCV

WALKTHROUGH PACKAGE NO	HGR NO	CALC NO	SUPP'T MARK NO	ELEV	AZIMUTH
CT-SB-I-044	1-CTSP-293-0340	WCG-1-644R0	K5	709.00	249.50
CT-SB-I-044	1-CTSP-293-0340	WCG-1-644R0	K5	705.33	249.50
CT-SB-I-045	1-CTSP-293-0341	WCG-1-644R0	K5	710.00	245.50
CT-SB-I-045	1-CTSP-293-0341	WCG-1-644R0	K5	709.00	245.50
CT-SB-I-045	1-CTSP-293-0341	WCG-1-644R0	COND.	705.33	245.50
CT-SB-I-046	1-CTSP-293-0342	WCG-1-644R0	K5	710.00	239.50
CT-SB-I-046	1-CTSP-293-0342	WCG-1-644R0	K5	709.00	239.50
CT-SB-I-047	1-CTSP-293-0356	WCG-1-644R0	K5	709.00	234.00
CT-SB-I-048	1-CTSP-293-0358	WCG-1-644R0	K5	709.00	229.50
CT-SB-I-049	1-CTSP-293-0359	WCG-1-644R0	K5	709.00	224.50
CT-SB-I-050	1-CTSP-293-0360	WCG-1-644R0	K5	709.00	219.50
CT-SB-I-051	1-CTSP-293-0361	WCG-1-644R0	K5	709.00	214.50
CT-SB-I-052	1-CTSP-293-0362	WCG-1-644R0	K5	709.00	210.50
CT-SB-I-053	1-CTSP-293-0363	WCG-1-644R0	K5	709.00	204.50
CT-SB-I-054	1-CTSP-293-0100	WCG-1-646R0	MK13	712.30	99.50
CT-SB-I-055	1-CTSP-293-0107	WCG-1-646R0	MK13	710.30	104.50
CT-SB-I-056	1-CTSP-293-0119	WCG-1-643R0	L5	733.50	112.00
T-SB-I-057	1-CTSP-293-0120	WCG-1-643R0	L5	733.50	116.00
T-SB-I-058	1-CTSP-293-0211	WCG-1-646R0	MK14	712.33	39.50
CT-SB-I-059	1-CTSP-293-0213	WCG-1-646R0	MK15	711.25	44.50
CT-SB-H-060	1-CTSP-293-0152	WCG-1-640R1	M5	773.00	1.00
CT-SB-H-061	1-CTSP-293-0153	WCG-1-640R1	M5	773.00	5.50
CT-SB-H-062	1-CTSP-293-0154	WCG-1-640R1	M5	773.00	12.00
CT-SB-H-063	1-CTSP-293-0155	WCG-1-640R1	M5	773.00	17.50
CT-SB-H-064	1-CTSP-293-0156	WCG-1-640R1	M5	773.00	23.00
CT-SB-H-065	1-CTSP-293-0157	WCG-1-640R1	M5	773.00	27.00
CT-SB-H-066	1-CTSP-293-0158	WCG-1-640R1	M5	773.00	32.50
CT-SB-H-067	1-CTSP-293-0159	WCG-1-643R0	N5	773.50	38.00
CT-SB-H-068	1-CTSP-293-0521	WCG-1-640R1	M5	773.50	336.00
CT-SB-H-069	1-CTSP-293-0536	WCG-1-640R1	M5	773.50	341.00
CT-SB-H-070	1-CTSP-293-0539	WCG-1-640R1	M5	773.50	346.75
CT-SB-H-071	1-CTSP-293-0541	WCG-1-640R1	M5	773.50	351.00
CT-SB-H-072	1-CTSP-293-0542	WCG-1-640R1	M5	773.50	355.50

THIS SHEET ADDED BY REV. 02

EBASCO SERVICES INCORPORATED UB 1/16/91 Rev. 1

BRANCH/PROJECT ID.: ~~LCTSP-293-158~~ WCG-1-640 1/9/91

SHEET 5 OF 19

DEPT.

BY 9 9 [illegible] DATE 11/9/90 OFS NO. NA NO. NA

CHKD. BY [illegible] DATE 12-4-90

CLIENT TVA

PROJECT WBNP - Unit-1

SUBJECT CALCULATION FOR CABLE TRAY SUPPORT # 1-CTSP-293-158 (DET. M5)

5. PURPOSE:

TO QUALIFY CABLE TRAY SUPPORTS MARK NO. DET. M5 FOR CRITICAL CASE.

6. APPLICABLE CRITERIA (MARKED "X"):

____ 1. DS-C1.7.1 R4 General Anchorage to Concrete
____ 2. WB-DC-20-21 R6 Misc. Steel Component for Category I Structures
____ 3. WB-DC-20-1.1 R9 Add. Diesel Gen. Bldg. & New Cat. I Structures
X 4. WB-DC-20-21.1 R5 Category I Cable Tray Supports
____ 5. WB-DC-40-31.8 R7 Seismically Qualifying Round and Rectangular Ducts
____ 6. WB-DC-40-31.9 R11 CRITERIA FOR DESIGN OF PIPING SUPPORTS AND SUPPLEMENTAL STEEL IN CATEGORY I STRUCTURES.
____ 7. WB-DC-40-31.10 R4 Seismically Qualifying Conduit Supports
X 8. QIR-CEB-WBN-89-361 R0 Auxiliary-Control and Reactor Buildings - Acceleration & Response Spectra
X 9. WCG-1-370 R0 Generation of OBE 4% Damping ARS for Unit 1 ICS, SCV, and SB
____ 10. WCG-1-377 R1 Auxiliary Control Building 4% Damping Curves and Seismic Forces
____ 11. DS-C1.6.9 R0 Design of Clamp and Channel/Strut Components for Conduit
____ 12. DS-C1.6.14 R0 Design of Unistrut & B-Line Clamps for Piping and Tubing
X 13. (Specify): CEB REPORTS No. CEB-WBN-85-50-C REV. 1

SUPERSEDED PSPatel 7/3/91

7. APPLICABLE CODES AND STANDARDS (MARKED "X"):

____ 1. AISC Manual of Steel Construction, 7th Edition
X 2. AISC Manual of Steel Construction, 8th Edition
____ 3. ASTM _____
____ 4. ANSI/AWS D.1.1-83, 1983, Structural Welding Code - Steel
____ 5. ANSI B31.1
____ 6. ACI 318-77 Building Code Requirements for Reinforced Concrete
____ 7. (Specify):

EBASCO SERVICES INCORPORATED UB 1/16/91

BRANCH/PROJECT ID.: ~~LCTSP-293-15B~~ WCG-1-640 1/9/91 Rev.1

SHEET 6 OF 19

DEPT.

BY G. Gurly DATE 11/9/90

OFS NO. NA NO. NA

CHKD. BY A. Williams DATE 12-4-90

CLIENT TVA

PROJECT WBNP - Unit-1

SUBJECT CALCULATION FOR CABLE TRAY SUPPORT No. 1-CTSP-293-15B (DET. M5)

8. ASSUMPTIONS, LITERATURE SEARCHES AND OTHER APPLICABLE BACKGROUND DATA:

NONE

9. APPLICABLE REFERENCES (MARKED "X"):

X 1. Design of welded structures by O.W. Blodgett 1966

___ 2. Formulas for stress and strain by R.J. Roark & W.C. Young, 5th Edition

___ 3. Unistrut Catalog No.: 11 1988

___ 4. Bergen Paterson Catalog No.:

___ 5. Structural Drawing No.:

___ 6. WBNP-PSDM (Watts Bar Nuclear Plant Pipe Support Design Manual) Vol. 1 Rev.2

X 7. AISC Manual of Steel Construction, 8th Edition

X 8. (Specify): "FORMULAS FOR NATURAL FREQUENCIES AND MODE SHAPE" BY R.D. BLEVINS, 1979 EDITION. P. 108, 184 & 183.

SUPERSEDED BY Rev.1 7/23/91

10. APPLICABLE DESIGN INPUT DATA:

A) TRAY PLAN DWG. NO. 108W10504-10 (REV. 1)

B) DWG. NO. 48W970-5 (REV. 11)

C) TRAY PLAN DWG. NO. 108W10504-2 (REV. 2)

D) DWG. NO. 48W970-4 (REV. 4)

E) ENVIRONMENTAL DATA DWG. NO. 47E235-44 (REV. 1)

F) CALC. # WCG-1-409 (REV. 0) Rev.1 1/9/91

EBASCO SERVICES INCORPORATED WB 1/16/91

BY J. Ghaly DATE 11/9/90 BRANCH/PROJECT ID: ~~1-CTSP-293-158~~ WCG-1-640 OFS NO. N/A SHEET 7 OF 19 Rev. 1

CHKD. BY A. Tiwari DATE 12-4-90 DEPT. NO. N/A

CLIENT TVA

PROJECT WBNP / UNIT-1

SUBJECT CALCULATION FOR CABLE TRAY SUPPORT NO. 1-CTSP-293-158 (DET. M5)

11) CALCULATION

INDEX — SHEET No.

11.1	OBJECTIVE	8
11.2	SUPPORT SKETCH	9
11.3	DEAD LOAD (D)	10
11.4	LIVE LOAD (L)	10
11.5	SYSTEM FREQUENCY	11
11.6	THERMAL LOADS	12
11.7	SEISMIC DESIGN "G" VALUES	13
11.8	DESIGN LOADS	13
11.9	LOADING COMBINATIONS	14
11.10	QUALIFICATION OF 3/8" ϕ BOLTS	15
11.11	QUALIFICATION OF WELD	16 & 17
11.12	QUALIFICATION OF ANGLE (L 6x3 1/2x3/8)	18

SUPERSEDED BY 1/3/91

EBASCO SERVICES INCORPORATED

BY [illegible] DATE 11/9/90 BRANCH/PROJECT ID: ~~1CTSP-293-158~~ WCG-1-640 Rev. 1 SHEET 8 OF 19

CHKD. BY [illegible] DATE 12-4-90 OFS NO. N/A DEPT. NO. N/A

CLIENT TVA

PROJECT WBNP / UNIT-1

SUBJECT CALCULATION OF CABLE TRAY SUPPORT # 1-CTSP-293-158 (DET. M5)

11.1 OBJECTIVE

THE OBJECTIVE OF THIS CALCULATION IS TO DEMONSTRATE THE STRUCTURAL ADEQUACY OF THE CRITICAL CASE FOR CABLE TRAY SUPPORTS "DET. M5" ATTACHED TO THE SCV & STIFFNER PLATES. SUPPORT # 1-CTSP-293-158 IS ATTACHED TO 1 3/8" THK. HOR. STIFF. WITH TWO CLIP ANGLES BY REVIEWING OVERWEIGHT CABLE TRAY DATA (CALC. # WCG-1-409 REV. 0 & DWG. 108W10504-10, R1 & DWG. 48W970-5, R11. SUPPORT # 1-CTSP-293-158 REPRESENTS CRITICAL CASE FOR ANALYSIS.

SUPERSEDED BY 1/9/91

EBASCO SERVICES INCORPORATED

BY [illegible] DATE 11/9/90 BRANCH/PROJECT ID: ~~LCTSP293158~~ WCG-1-640 Rev. 1 SHEET 9 OF 19

CHKD. BY A. [illegible] DATE 12/4/90 OFS NO. N/A DEPT. NO. N/A

CLIENT TVA

PROJECT WBNP / UNIT-1

SUBJECT CALC. FOR CABLE TRAY SUPPORT # 1-CTSP-293-158 (DET. M5)

11.2) SUPPORT SKETCH

REF.

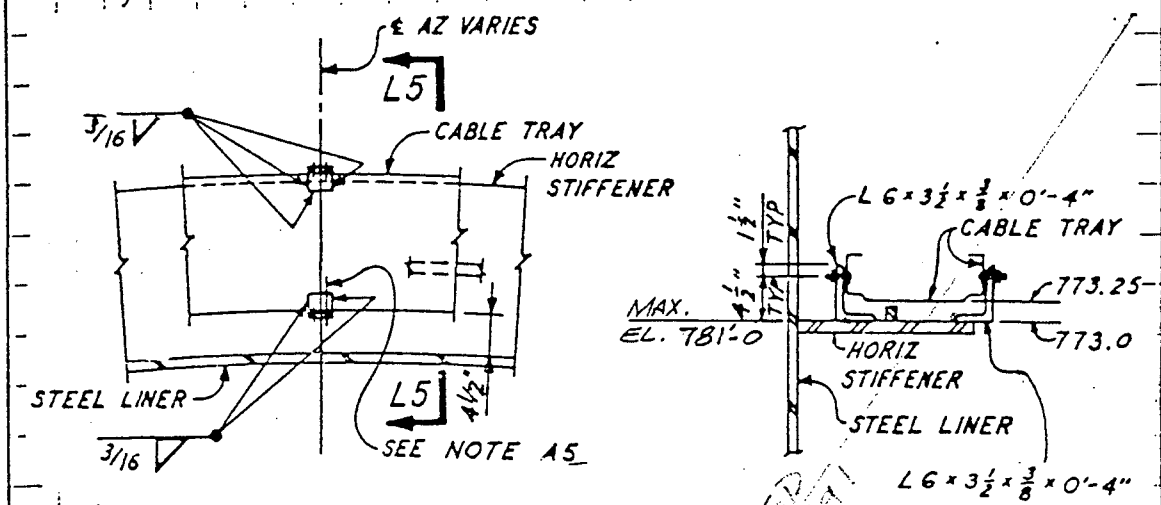

PLAN

L5-L5

DET M5
12 REQD

SUPERSEDED (TCAI 7/31/91)

DWG. No. 48W970-5 REV. 11

NOTE A5:
DRILL 7/16" ϕ HOLES FOR 3/8" ϕ BOLTS WITH NUTS. BOLTS TO BE ROUND HD, PHILLIPS HD ASTM A307 BOLTS WITH HEADS ON INSIDE OF TRAY.

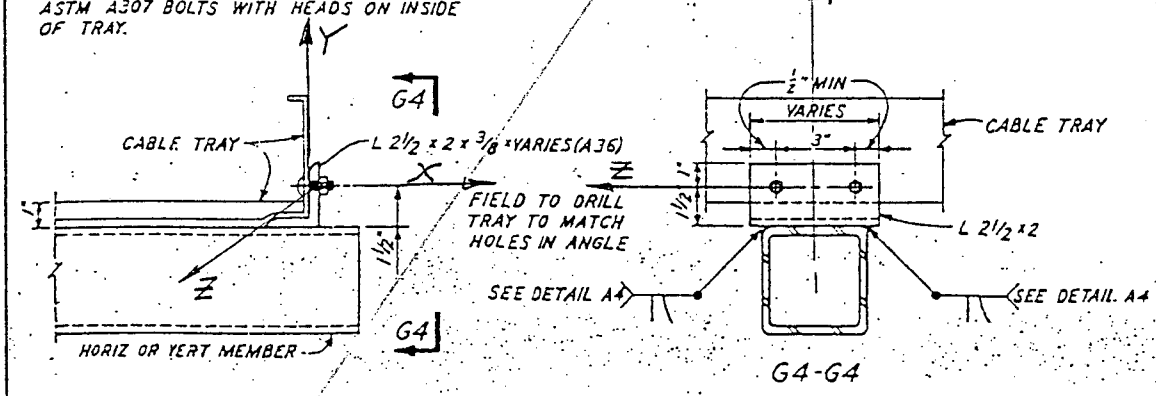

G4-G4

DWG. NO 48W970-4 REV. 4

CABLE TRAY HOLD DOWN CLIP DETAIL
FOR VERT & HORIZ MEMBER CONNECTION

FOR QUALIFICATION USE L 6 x 3½ x 3/8 SINCE IT WILL GIVE MORE REACTIONS ON WELDS.

581 3-88

EBASCO SERVICES INCORPORATED WB 1/16/91 gg 1/9/91 Rev.1

BY G.G. Haly DATE 11/9/90 BRANCH/PROJECT ID: ~~1-CTSP-293-158~~ WCG-1-640 SHEET 10 OF 19

CHKD. BY A. Mani DATE 12/4/90 OFS NO. N/A DEPT. NO. N/A

CLIENT TVA

PROJECT WBNP / UNIT-1

SUBJECT CALC. FOR CABLE TRAY SUPPORT # 1-CTSP-293-158 (DET. M5)

	REF.
11.3) DEAD LOAD (D)	
CONSIDER TRAY SPAN OF 8'-0" ON BOTH SIDES OF SUPPORT.	WB-DC-20-21.1 PG. 2, REV 05
SUPPORT WEIGHT,	
$W1 = 5.3^{\#/'}(L2\frac{1}{2}\times2\times\frac{3}{8})\frac{4''}{12}(2)$	AISC 8th ED PG. 1-46
$\approx 4^{\#}$	
SUPERSEDED gg 1/9/91	
PARTICIPATING MASS OF TRAY (SIZE 4"x18"):	
$W2 = 8'(45^{\#/'} + 2^{\#/'}) = 376^{\#}$	WB-DC-20-21.1 PG. 4 & 5, REV 05
TOTAL PARTICIPATING MASS,	
$W_T = W1 + W2 = 376 + 4$	
$= 380^{\#}$	
USE $400^{\#}$ FOR DESIGN	
11.4) LIVE LOAD (L)	
$30^{\#/'}$ TO ACCOUNT FOR PERSONNEL	
$L = 30(8') = 240^{\#}$	

EBASCO SERVICES INCORPORATED

BY gg Hardy DATE 11/9/90 BRANCH/PROJECT ID: ~~1-CTSP-293-158~~ WCG-1-640 WB 1/16/91 gg 1/9/91 Rev. 1 SHEET 11 OF 19

CHKD. BY A. Williams DATE 12/4/90 OFS NO. N/A DEPT. NO. N/A

CLIENT TVA

PROJECT WBNP/UNIT-1

SUBJECT CALC. FOR CABLE TRAY SUPPORT #1-CTSP-293-158 (DET. M5)

11.5) SYSTEM FREQUENCY

TRAY FREQUENCY f_1:

CONSIDER CABLE TRAY TO BE 8'-0" SIMPLY SUPPORTED BEAM

f_1 (FRIST MODE FREQUENCY)

$$= \frac{\pi}{2L^2} \sqrt{\frac{EI}{M/g}}$$

$$= \frac{\pi}{2(8' \times 12)^2} \sqrt{\frac{29 \times 10^6 (2 \times 0.6394) \cdot 386.4}{(45+2)/12}}$$

$= 10.3$ HZ

SUPERSEDED PYRALIN 7/3/91

REF: "FORMULAS FOR NATURAL FREQ. AND MODE SHAPE" BY R. BLEVINS 1979 EDITION Pg. 108, 183 & 184

SUPPORT FREQUENCY f_2:

SINCE SUPPORT DET. M5 CONSISTS OF TWO TRAY CLIPS ATTACHED DIRECTLY TO HORIZONTAL STIFFENER, SUPPORT FREQUENCY IS CONSIDERED RIGID. TRAY FREQUENCY (10.3 HZ) WILL DOMINATE SYSTEM FREQUENCY.

FOR ANALYSIS USE PEAK 'G' VALUES.

THIS CALCULATION IS USED TO QUALIFY ALL TRAY CLIPS FOR SUPPORTS ATTACHED TO THE SCV.

581 2-88

EBASCO SERVICES INCORPORATED WB 1/16/91 RJ 1/9/91 Rev. 1

BY G. Gholy DATE 11/9/90 BRANCH/PROJECT ID: ~~1-CTSP-293-158~~ WCG-1-640 SHEET 12 OF 19

CHKD. BY A. Malvin DATE 12/4/90 OFS NO. N/A DEPT. NO. N/A

CLIENT TVA

PROJECT WBNP/UNIT-1

SUBJECT CALC. FOR CABLE TRAY SUPPORT # 1-CTSP-293-158 (DET. M5)

11.6) THERMAL LOADS

REF.

$T_o = AE\epsilon(\Delta t_o)$

DWG. 47E235-44 REV. 1

$= 0.626(29 \times 10^6)(0.0001^*)\left(\frac{105^\circ - 70^\circ}{100^\circ}\right)$

$= 635^\#$

$T_a = AE\epsilon(\Delta t_a)$

$= 0.626(29 \times 10^6)(0.0001^*)\left(\frac{133.7^\circ - 70^\circ}{100^\circ}\right)$

$= 1156^\#$

ABOVE LOADS ARE APPLIED IN AXIAL DIRECTION OF CABLE TRAY.

SUPERSEDED BY PATH 7/3/91

* DIFFERENTIAL COEFFICIENT OF THERMAL EXPANSION BETWEEN SCV & CABLE TRAY SYSTEM.

Rev. 1 RJ 1/9/91 WB 1/16/91

EBASCO SERVICES INCORPORATED UB 1/16/91

BY J. Ghaly DATE 11/9/90 BRANCH/PROJECT ID: ~~1-CTSP-293-158~~ 1/9/91 WCG-1-640 Rev. 1 SHEET 13 OF 19

CHKD. BY A. Tabanian DATE 12/4/90 OFS NO. N/A DEPT. NO. N/A

CLIENT TVA

PROJECT WBNP/UNIT-1

SUBJECT CALC. FOR CABLE TRAY SUPPORT # 1-CTSP-293-158 (DET. M5)

11.7) SEISMIC DESIGN "G" VALUES

REF.

PEAK "G" VALUES FOR OBE & SSE CONDITIONS

AT ELEV. 792'-0" FOR ATTACHMENT TO SCV
* ℄ 773'-0"

DIR.	HORIZONTAL (HZ) X OR Z G_H	VERTICAL (HZ) G_Y	REF.
OBE 4% Damping	2.0	0.63	CALC. # WCG-1-370 REV. 0 QIR-CEB-WBN-89-361 REV. 0
SSE 7% Damping	2.5	0.75	
DBA (7% Damping) AT AZ 315°	$\left[(3.3734)^2 + (6.3479)^2\right]^{1/2} = 7.1866$ (E-W, N-S)	0.7602	REFER TO CEB REPORTS CEB-WBN-85-50-C REV. 1

SUPERSEDED 1/9/91

11.8) DESIGN LOADS

DIR.	HORIZONTAL (Lb) X OR Z	VERTICAL (Lb) Y
D	—	400
L	—	240
E	$W_T(1.2G_H)_{OBE} = 960$	$W_T(1.2G_Y)_{OBE} = 302$
E'	$W_T(1.2G_H)_{SSE} = 1200$	$W_T(1.2G_Y)_{SSE} = 360$
P_a	$W_T(1.2G_H)_{DBA} = 3451$	$W_T(1.2G_Y)_{DBA} = 365$
T_o	635	—
T_a	1150	—

EBASCO SERVICES INCORPORATED

UB 1/16/91 1/9/91 Rev. 1

BY [illegible] DATE 11/9/90 BRANCH/PROJECT IL: ~~LCTSP 293 158~~ WCG-1-640 SHEET 14 OF 19

CHKD. BY [illegible] DATE 12/4/90 OFS NO. N/A DEPT. NO. N/A

CLIENT TVA

PROJECT WBNP/UNIT-1

SUBJECT CALC. FOR CABLE TRAY SUPPORT # 1-CTSP-293-158 (DET. M5)

11.9) LOADING COMBINATIONS

REF. WB-DC-20-21.1 PG. 5 REV. 05

LOAD CASE NO.	DIRECTION	ALLOW	HORIZONTAL (lb) X OR Z	VERTICAL (lb) Y
I	D+L	AISC	—	640
IA	D+E	AISC	900	702
IB	$D+E+T_o$		1595	702
II	D+E'	1.5 x AISC	1200	760
IIA	$D+E'+T_o$	1.5 x AISC	1835	760
III	$D+E'+P_a+T_a$	1.5 x AISC	5807	1125

GOVERNING DESIGN LOADING COMBINATION:

$\frac{5807}{900} = 6.05 > 1.5$ HOR.

$\frac{1125}{702} = 1.6 > 1.5$ VERTICAL

LOAD CASE NO. III GOVERNS THE DESIGN

SUPERSEDED [illegible] 7/3/91

EBASCO SERVICES INCORPORATED

BRANCH/PROJECT ID: ~~CTSP-293-158~~ WCG-1-C40 | Rev. 1

BY J. Grady DATE 11/9/90 | SHEET 15 OF 19

CHKD. BY A. Williams DATE 12/4/90 | OFS NO. N/A | DEPT. NO. N/A

CLIENT TVA

PROJECT WBNP/ UNIT-1

SUBJECT CALC. FOR CABLE TRAY SUPPORT # 1-CTSP-293-158 (DET. M5)

11.10) QUALIFICATION OF 3/8" ϕ BOLTS

REF.

F_X/BOLT $= \frac{(5807-1156)}{4}$

$= 1163^{\#}$/BOLT

F_Y/BOLT $= \frac{1125}{4}$

$= 282^{\#}$/BOLT

F_Z/BOLT $= \frac{5807}{4}$

$= 1452^{\#}$/BOLT

TENSION/BOLT $= \underline{1163^{\#}}$

SHEAR/BOLT $= \sqrt{(282)^2 + (1452)^2}$

$= \underline{1479^{\#}}$

ALLOW. TENSION/BOLT $= \frac{\pi}{4}\left(\frac{3}{8}\right)^2 27000 = 2982^{\#} > 1163^{\#}$ OK — WB-DC-20-21.1 REV. 05 PG. A6

ALLOW. SHEAR/BOLT $= \frac{\pi}{4}\left(\frac{3}{8}\right)^2 13500 = 1491^{\#} > 1479^{\#}$ OK

SUPERSEDED 1/3/91

UB 1/16/91 JJ 1/9/91

561 2-68

EBASCO SERVICES INCORPORATED

BY [illegible] DATE 11/9/90 BRANCH/PROJECT ID: ~~1-CTSP-293-158~~ WCG-1-640 Rev. 1 SHEET 16 OF 19

CHKD. BY [illegible] DATE 12/4/90 OFS NO. N/A DEPT. NO. N/A

CLIENT TVA

PROJECT WBNP/UNIT-1

SUBJECT CALC. FOR CABLE TRAY SUPPORT # 1-CTSP-293-158 (DET. M5)

REF.

11.11) QUALIFICATION OF WELD

FORCES AT C.G. OF WELD BETWEEN 4"C x 3½" AND 1 3/8" THK. STIFFENER.

$F_X = 2 \times 1163^{\#/BOLT} = 2326^{\#}$ (USE $F_X = 0$)

$F_Y = 2 \times 282^{\#/BOLT} = 564^{\#}$

$F_Z = 2 \times 1452^{\#/BOLT} = 2904^{\#}$

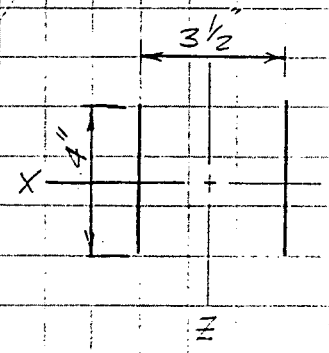

$M_X = 2904^{F_Z} (4.5") = 13068$ IN.#

$M_Y = 2904^{F_Z} (3.5/2) = 5082$ IN.#

$M_Z = 2326^{F_X} (4.5") + 564^{F_Y} (\frac{3.5}{2}) = 11454$ IN#

USE $M_Z = 0$ (CONSIDER 0) SINCE PL CAN ROTATE ABOUT Z

SUPERSEDED [illegible] 7/31/91

581 2-88

EBASCO SERVICES INCORPORATED

BY [illegible] DATE 11/9/90 **BRANCH/PROJECT ID:** ~~1-CTSP-293-158~~ WCG-1-C40 WB 1/16/91 1/9/91 Rev. 1 SHEET 17 OF 19

CHKD. BY [illegible] DATE 12/4/90 OFS NO. N/A DEPT. NO. N/A

CLIENT TVA

PROJECT WBNP - UNIT 1

SUBJECT CALCULATION FOR CABLE TRAY SUPPORT # 1-CTSP-293-158 (DET. M5

WELD CALCULATION: PARALLEL WELD

WELD BETWEEN:

L 6 x 3½ x 3/8 & 1 3/8" THK. STIFFENER

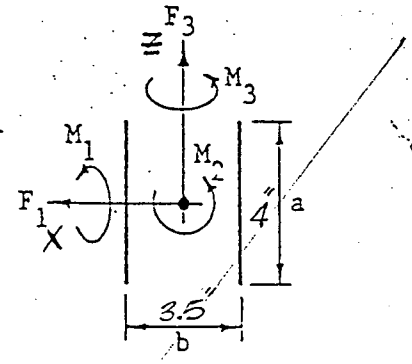

LOADING CASE: ☐ ENVELOPE ☒ LOAD CONDITION III

FORCES AND MOMENTS AT CENTER OF WELD:

$F_1 = F_X =$ 0 LB. $M_1 = M_X =$ 13,068 IN.-LB.

$F_2 = F_Y =$ 564 LB. $M_2 = M_Y =$ 5,082 IN.-LB.

$F_3 = F_Z =$ 2904 LB. $M_3 = M_Z =$ 0 IN.-LB.

WELD PROPERTIES: a = 4 IN. b = 3.5 IN.

Refer to welded Structures by O.W. Blodgett 1966

$A = 2a =$ 8 IN.

$Z_1 = \frac{a^2}{3} =$ 5.33 IN.^{2} $Z_3 = ab =$ 14 IN.^{2}

$C_1 = \frac{a}{2} = 2$ IN $C_3 = \frac{b}{2} = 1.75$ IN

$\frac{J}{C_1} = \frac{(3b^2 + a^2)}{3} =$ 17.58 IN $\frac{J}{C_3} = \frac{a(3b^2 + a^2)}{3b} =$ 20.09 IN.^{2}

SUPERSEDED BY Rev. 1 7/3/91

FORCE ON WELD

$$F = \left[\left(\frac{|F_2|}{A} + \frac{|M_1|}{Z_1} + \frac{|M_3|}{Z_3}\right)^2 + \left(\frac{|F_1|}{A} + \frac{|M_2|}{J/C_1}\right)^2 + \left(\frac{|F_3|}{A} + \frac{|M_2|}{J/C_3}\right)^2\right]^{1/2}$$

$$F = \left[\left(\frac{564}{8} + \frac{13068}{5.33} + \frac{0}{14}\right)^2 + \left(\frac{0}{8} + \frac{5082}{17.58}\right)^2 + \left(\frac{2904}{8} + \frac{5082}{20.09}\right)^2\right]^{1/2}$$

F = 2612 LB./IN.

REQUIRED WELD SIZE $S_S = 0.3(70{,}000)1.5 = 31500$ PSI

$$W_R = \frac{F}{0.707\ S_S} = \frac{2612}{0.707(31{,}500)} = 0.117 \text{ IN.} \leq W_{ACTUAL} = 3/16 \text{ IN.}$$

OK

11.12) QUALIFICATION OF ANGLE (L6x3½x⅜) REF.

CONSIDER THE ANGLE AS PL ⅜ X 4" LG. FIXED ON ONE SIDE & FREE ON THE OTHER

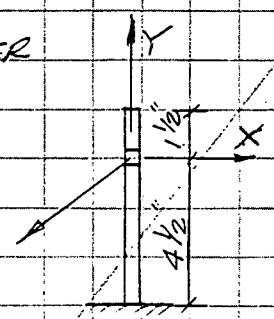

REACTIONS AT FIXED END:

$F_X = 1163 \times 2 = 2326^{\#}$

$F_Y = 282 \times 2 = 564^{\#}$

$F_Z = 1452 \times 2 = 2904^{\#}$

$M_X = 2904 \times 4\frac{1}{2}'' = 13{,}068$ IN.#

$M_Y = 0$, CONSIDER FORCES IN Y & Z DIRECTIONS.

$M_Z = 2326 \times 4\frac{1}{2}'' = 10{,}467$ IN.# (CONSIDER 0, SINCE PL CAN ROTATE ABOUT Z)

SECTIONAL PROPERTIES (AT FIXED END):

AXIAL LOAD IS SMALL, THEREFORE LOCAL BUCKLING IS NEGLECTED

$A = \frac{3}{8}(4) = 1.5$ IN^2

$S_Z = 4(\frac{3}{8})^2/6 = 0.094$ IN^3

$S_X = (\frac{3}{8})(4)^2/6 = 1.0$ IN^3

$f_y = \frac{2904}{1.5} = 1936$ PSI $< \frac{0.9F_Y^*}{\sqrt{3}}$ (17056 PSI)

$f_b = \frac{564}{1.5} + \frac{13{,}068}{1.0} = 13{,}444$ PSI $< 0.9F_Y^*$, OK (29,520 PSI)

* $F_Y = 32.8$ KSI (FOR 200°F)

SUPERSEDED PER UB 1/16/91

Rev. 1 1/9/91 UB 1/16/91

EBASCO SERVICES INCORPORATED WB 1/16/91

BY G. Ghaly DATE 11/9/90 BRANCH/PROJECT ID: ~~1-CTSP-293-158~~ 1/9/91 WCG-1-640 Rev. 1 SHEET 19 OF 19

CHKD. BY A. Tillman DATE 12-4-90 OFS NO. N/A DEPT. NO. N/A

CLIENT TVA

PROJECT WBNP / UNIT-1

SUBJECT CALCULATION FOR CABLE TRAY SUPPORT No 1-CTSP-293-158 (DET. M5)

12) SUMMARY OF CALCULATION RESULTS

3/8 ϕ A-307 BOLTS : (ACTUAL SHEAR) (ALLOW. SHEAR)

1479# 1491#

(ACTUAL TENSION) ALLOW. TENSION

1163# 2982#

3/16 FILLET WELD : (REQ'D SIZE) (PROVIDED)

0.117 IN 3/16 IN

L 6 X 3½ X 3/8 : (SHEAR) 1936 PSI 17056 PSI (ALLOW)

(BENDING) 13444 PSI 29520 PSI (ALLOW.)

13) CONCLUSION

WB 1/16/91 Rev. 1 1/9/91

CABLE TRAY SUPPORTS "DET. M5" ARE STRUCTURALLY ADEQUATE AND MEET ALL APPLICABLE DESIGN CRITERIA

SUPERSEDED RPatel 7/3/91

581 2-88

EBASCO SERVICES INCORPORATED
BRANCH/PROJECT ID.: WCG-1-640
~~1-CTSP-293-158~~ 99 1/9/91 WB 1/16/91

SHEET 1 OF 1 Rev.1
DEPT.

BY [illegible] DATE 11/9/90
CHKD. BY [illegible] DATE 12-4-90
OFS NO. NA NO. NA
CLIENT TVA
PROJECT WBNP - Unit-1
SUBJECT: CALCULATION FOR CABLE TRAY SUPPORT NO. 1-CTSP-293-158 (DET. M5)

14. ATTACHMENTS

TABLE OF CONTENTS

	NO. OF PAGES
Table of Contents of Attachment(s)	1
Attachment "A" Verification Work Sheet	1, 1A / R1
Footprint Load Attachment "B"	1 99 1/9/91 WB 1/16/91

SUPERSEDED PSPA 7/3/91

TOTAL NO. OF PAGES ~~3~~ 4 / REV.1 WB 1/16/91 99 1/9/91

ATTACHMENT A
VERIFICATION WORKSHEET
FOR CALCULATIONS AND DRAWINGS

Task No. N/A Title: CALCULATION FOR CABLE TRAY SUPPORT #

Document No. 1CTSP 293 158 1-CTSP-293-158 (DET. M5

Revision 0 **BRANCH/PROJECT ID:**

SUPERSEDED 12/04/17/3/91

QUESTIONS TO BE ADDRESSED

1	Were the inputs correctly selected at the correct revision level, and incorporated into the design?
2	Are the assumptions necessary to perform the design activity adequately described and reasonable? Where necessary, are assumptions identified for subsequent reverification after the detailed design activities are completed?
3a	Are the appropriate quality requirements specified?
3b	Are the appropriate quality assurance requirements specified?
4	Are the applicable codes, standards, and regulatory requirements including issue and addenda properly identified, and are their requirements for design met?
5	Have applicable construction and operating experience been considered?
6	Have the design interface requirements been satisfied?
7	Was an appropriate design method used?
8	Is the output reasonable compared to inputs?
9	Are the specified parts, equipment, and processes suitable for the required application? Are all applicable construction specifications referenced on the drawing(s)?
10	Are the specified materials compatible with each other and with the design environmental conditions to which the materials will be exposed?
11	Have adequate maintenance features and requirements been specified?
12	Are accessibility and other design provisions adequate for performing needed maintenance and repair?
13	Has adequate accessibility been provided to perform the inservice inspection expected to be required during the plantlife?
14	Has the design properly considered radiation exposure to the public and plant personnel?
15	Is the acceptance criteria incorporated in the design document sufficient to allow verification that design requirements have been satisfactorily accomplished?
16	Have adequate preoperational and subsequent periodic test requirements been appropriately specified?
17	Are adequate handling, storage, cleaning and shipping requirements specified?
18	Are adequate identification requirements specified?
19	Are requirements for record preparation review, approval, retention, etc., adequately specified?

For Calculations, only questions 1, 2, 4, 6, 7, 8 and 15 are considered applicable.

Independent Verifier M.KAMBLE/ Mkamble 12/20/90
Print/Sign Date

ATTACHMENT A
VERIFICATION WORKSHEET
FOR CALCULATIONS AND DRAWINGS

Task No. N/A

Document No. WCG-1-640

Revision 1

Title: CALCULATION FOR CABLE TRAY SUPPORT # 1-CTSP-293-158 (DET. M5)

SUPERSEDED P.P.Jd 7/3/91

QUESTIONS TO BE ADDRESSED

1	Were the inputs correctly selected at the correct revision level, and incorporated into the design?
2	Are the assumptions necessary to perform the design activity adequately described and reasonable? Where necessary, are assumptions identified for subsequent reverification after the detailed design activities are completed?
3a	Are the appropriate quality requirements specified?
3b	Are the appropriate quality assurance requirements specified?
4	Are the applicable codes, standards, and regulatory requirements including issue and addenda properly identified, and are their requirements for design met?
5	Have applicable construction and operating experience been considered?
6	Have the design interface requirements been satisfied?
7	Was an appropriate design method used?
8	Is the output reasonable compared to inputs?
9	Are the specified parts, equipment, and processes suitable for the required application? Are all applicable construction specifications referenced on the drawing(s)?
10	Are the specified materials compatible with each other and with the design environmental conditions to which the materials will be exposed?
11	Have adequate maintenance features and requirements been specified?
12	Are accessibility and other design provisions adequate for performing needed maintenance and repair?
13	Has adequate accessibility been provided to perform the inservice inspection expected to be required during the plantlife?
14	Has the design properly considered radiation exposure to the public and plant personnel?
15	Is the acceptance criteria incorporated in the design document sufficient to allow verification that design requirements have been satisfactorily accomplished?
16	Have adequate preoperational and subsequent periodic test requirements been appropriately specified?
17	Are adequate handling, storage, cleaning and shipping requirements specified?
18	Are adequate identification requirements specified?
19	Are requirements for record preparation review, approval, retention, etc., adequately specified?

For Calculations, only questions 1, 2, 4, 6, 7, 8 and 15 are considered applicable.

Independent Verifier U. BHADRA / Udayan Bhadra 1-16-91
Print/Sign Date

ATTACHMENT "B"

SHEET 1 OF 1

DCN NO. N/A

FOR NE USE ONLY Rev.1 | BRANCH/PROJECT ID: ~~1-CTSP-293-158~~ WCG-1-C040 WB 1/16/91 CJ 1/9/91

SHEET 1 OF 1

STRUCTURAL ATTACHMENT LOAD TRANSMITTAL FORM

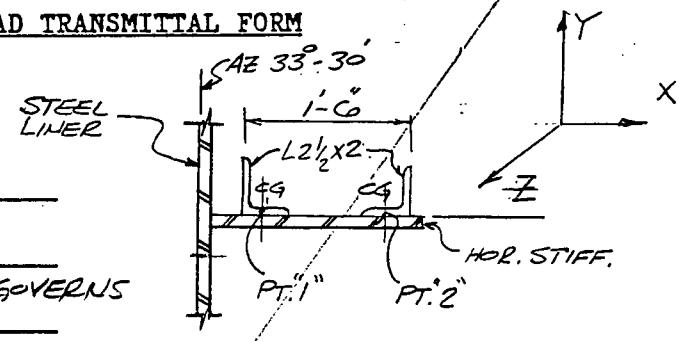

Support Mark No. 1-CTSP-293-158 (DET. M5)

Support Dwg. No. 48W970-5 Rev. 11

Documents Attached See Sketch

Load Case DW + OBE, DW + SSE + Pa + Ta ← GOVERNS

Footprint loads reported below represent reactions from the governing pipe support load case (Normal, upset or faulted).

Footprint loads reported below were generated by enveloping worst case supports and may be reduced through more exact analysis (Y/N) N.

Movements at attachment point are requested (Y/N) N.

Civil/structural steel at the pipe support attachment point has been assumed rigid. CSG verification is requested (Y/N) N

Support attachment point loads: (Attach. Pts. and coord. as marked on attached sketch)

Attachment Pt	Attachment (Code)	Fx lbs	Fy lbs	Fz lbs	Mx in-lbs	My in-lbs	Mz in-lbs
1	OBE	±	±	±	±	±	±
	SCV SSE	± 2326	± 564	± 2904	± 13068	± 5082	± 11454
2	OBE	±	±	±	±	±	±
	SCV SSE	± 2326	± 564	± 2904	± 13068	± 5082	± 11454

Attachment Codes: Bldg. Steel (BS), Concrete (C), Embedded Plate (EP), Steel Containment Vessel (SCV), Valve or Equipment (V or E), HVAC Support (HVAC), Cable Tray Support (CTS), Pipewhip Restraint (PR), Other (O) - specify

Comments: Fx & Fz DO NOT ACT AT SAME TIME
FOR COORDINATES & LOCATION SEE ABOVE SKETCH

Prepared By: [signature] Date: 11/9/90 Ext. 1082

Checked By: [signature] Date: 12-4-90

SUPERSEDED 7/3/91

0980d