US-APWR

Design Certification Application Orientation

Detail of FSAR

Tier2: Chapter 6

January 15,16, 2008

Mitsubishi Heavy Industries, Ltd.

Presenter

Andrew B. Johnson

Principal Engineer

Mitsubishi Nuclear Energy Systems, Inc.

Contents

1. Overview of Chapter
   - ✓ Title of Chapter
   - ✓ Scope of Chapter
2. Design Features

1. Overview of Chapter

➢Title of Chapter

Chapter 6:

ENGINEERED SAFETY FEATURES (ESFs)

➢Scope of Chapter

This chapter includes the following ESFs:

- **6.1 Engineered Safety Features Material**
- **6.2 Containment Systems**
- **6.3 Emergency Core Cooling Systems (ECCS)**
- **6.4 Habitability Systems**
- **6.5 Fission Product Removal and Control Systems**
- **6.6 Inservice Inspection of Class 2 and 3 Components**

2. Design Features

- 6.2 Containment Systems

  Containment systems consists of followings:

  - Containment Structure (PCCV)
  - Containment Spray System
  - Containment Isolation System
  - Containment hydrogen monitoring and control system

2. Design Features

- Containment Systems (Cont'd)
  - ✓ Containment Function
    - The containment is designed as an essentially leak-tight barrier that will safely and reliably accommodate calculated temperature and pressure conditions resulting from loss-of-coolant accident, or main steam line break.

Major Design Parameter

Type	*Prestressed Concrete Containment Vessel (PCCV) with Carbon Steel Liner*
Design Pressure	*68 psig*
Design Temperature	*300 deg. F*
Design Leakage Rate	*0.1% air mass /day*

2. Design Features

- Containment Systems (Cont'd)

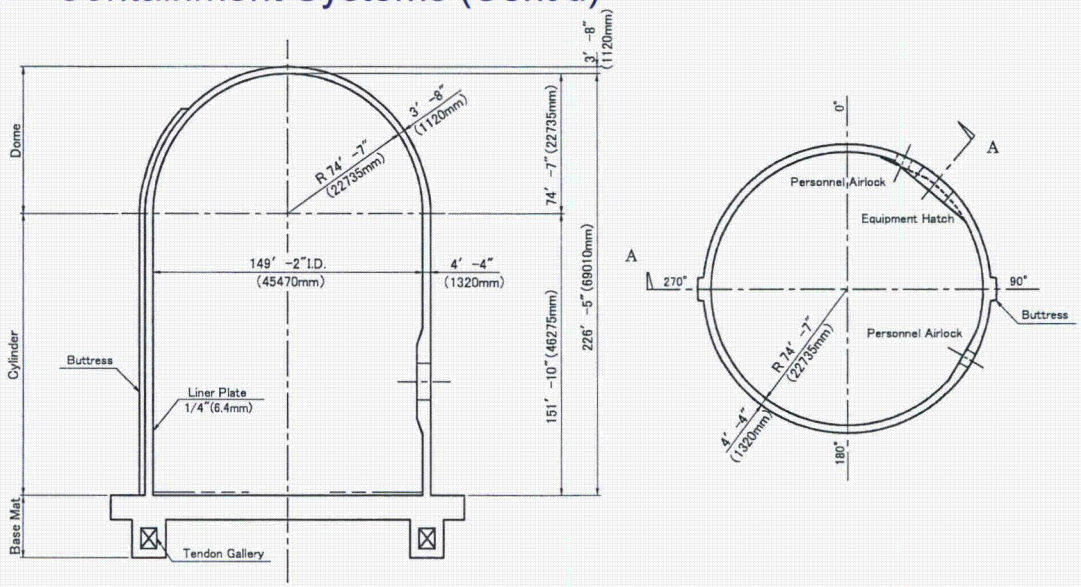

A – A Vertical Section

Configuration of Containment Vessel

2. Design Features

- Containment Systems (Cont'd)
  - ✓ Containment Function (Cont'd)

Example analysis result (large break LOCA)

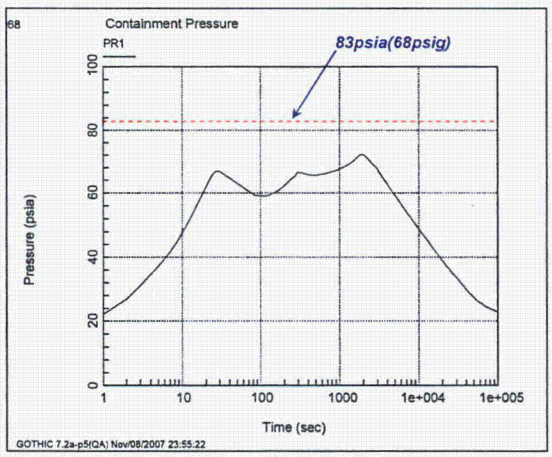

Pressure Transient

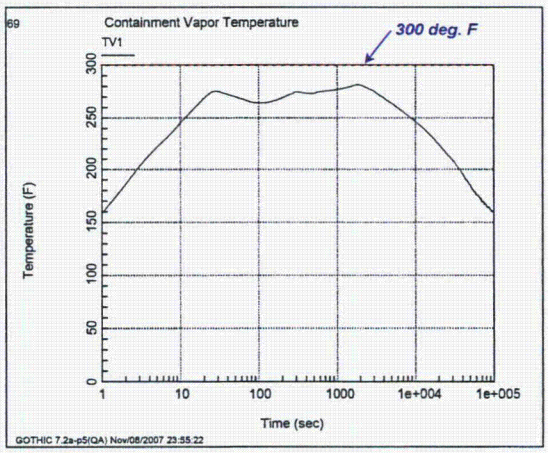

Temperature Transient

2. Design Features

➢ Containment Systems （Cont'd)

✓ Containment Heat Removal

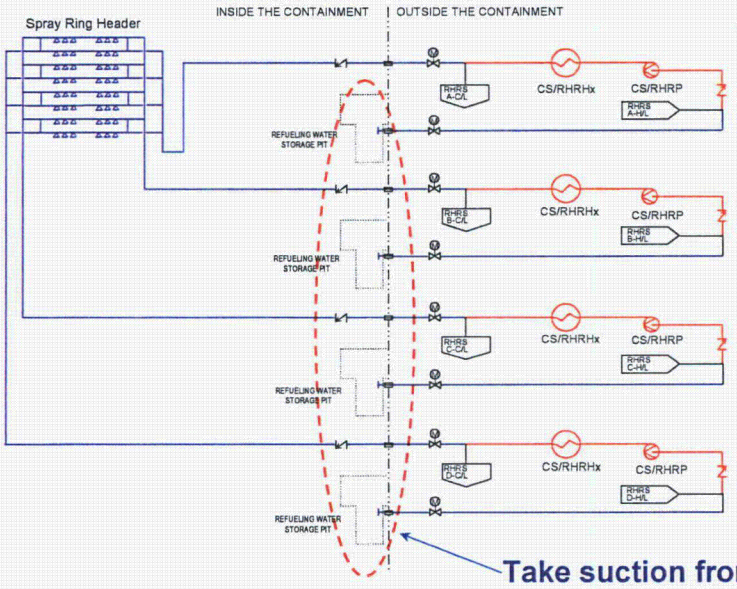

- *4 Independent trains*
- *Automatic initiation by Containment Spray Signal*
- *Pumps and heat exchangers used for RHR functions during shutdown*
- *Common Spray Ring Header*

Take suction from in-containment RWSP

Note: Red portions are common part for CSS and RHRS

2. Design Features

➢ 6.3 Emergency Core Cooling Systems (ECCS)

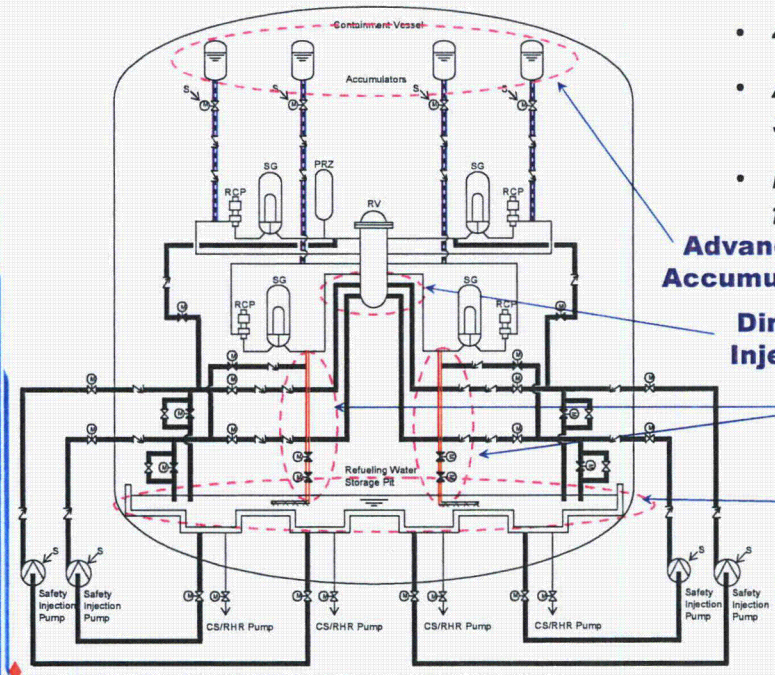

- *4 Independent trains*
- *Automatic initiation by Safety Injection Signal*
- *Emergency Letdown Line for Safe Shutdown*

Advanced Accumulator

Direct Vessel Injection (DVI)

Emergency Letdown Line

Take suction from in-containment RWSP

Safety Injection Pump

2. Design Features

- Emergency Core Cooling Systems (ECCS) (Cont'd)
  - ✓ **Advanced Accumulator**
    - Automatic switching of injection flow rate by flow damper
    - Integrates function of low head injection system
    - Long accumulator injection time allows longer time for safety injection pump to start

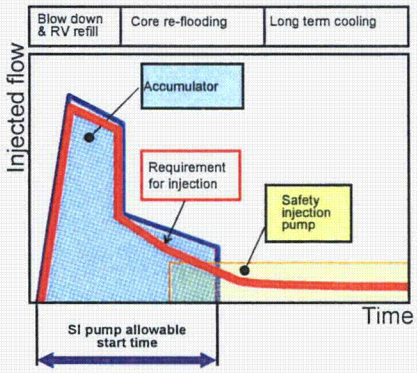

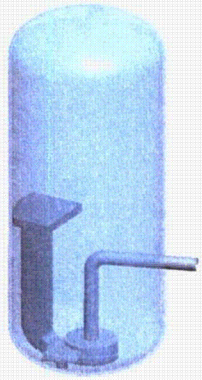

Advanced Accumulator

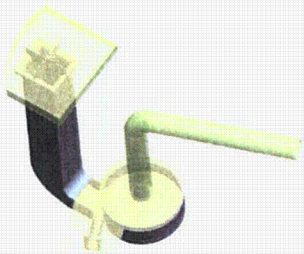

Flow Damper

2. Design Features

- 6.4 Habitability Systems

  The habitability systems allow operators to remain safely inside the control room envelope (CRE), that includes the main control room (MCR), and take the actions necessary to manage and control the plant under abnormal plant conditions, including a LOCA.

  ✓**MCR HVAC System**
  - 2 x 100% MCR emergency filtration units
  - 4 x 50% MCR air handling units
  - Air tight isolation dampers
  - Two emergency modes
    Pressurization mode ; during an accident with radiological releases.
    Isolation mode ; during a toxic gas event
  - Automatic initiation by the MCR isolation signal

2. Design Features

- Habitability System (Cont'd)

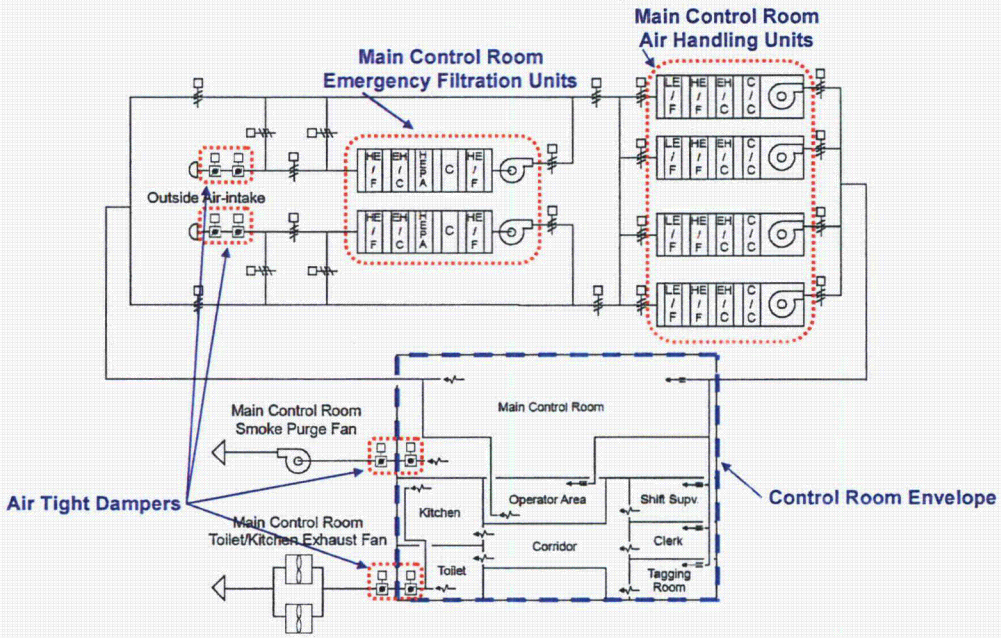

2. Design Features

- 6.5 Fission Product Removal and Control Systems

✓The fission product removal systems remove fission products that are released from the reactor core as a result of postulated accidents.

✓The containment controls the leakage of fission products to ensure that the leakage rate from the containment is below limits.

✓The US-APWR fission product removal and control systems are as follows:

- Containment spray system
- Containment
- Annulus emergency exhaust system

➢ Fission Product Removal and Control System (Cont'd)

Fission product removal effects differ with the chemical forms of the radioactive iodine. The assumed chemical forms are noble gas, elemental iodine, organic iodine, and particulate (aerosol). The fission product removal effects in the US-APWR containment under accident conditions are the following:

Mechanism	Noble Gas	Elemental Iodine	Organic Iodine	Particulate (Aerosol)
Containment Spray	Not Applicable	Slight effect, No credit applied (Note 1)	Not Applicable	Applicable (Based on SRP 6.5.2)
Natural Deposition	Not Applicable	Applicable (Note 2) (Based on SRP 6.5.2)	Not Applicable	Applicable (Powers natural deposition model (NUREG/CR-6189): 10th percentile)
Radioactive Decay	Applicable	Applicable	Applicable	Applicable
Containment Leakage (Note 3)	Applicable (Based on Technical Specifications)	Applicable (Based on Technical Specifications)	Applicable (Based on Technical Specifications)	Applicable (Based on Technical Specifications)
Annulus Emergency Exhaust System	Not Applicable	Not Applicable	Not Applicable	Applicable (HEPA filter)

Notes:

1. ***The CSS with NaTB baskets is expected to achieve a pH of at least 7 in the RWSP. Thus, the CSS can remove elemental iodine slightly. Therefore, we assume that the CSS does not remove elemental iodine.***
2. ***The CSS removal effects contain the removal effect by natural deposition. Because the removal effects for elemental iodine by the CSS is not credited, the removal effects for elemental iodine by natural deposition can be credited in not only the sprayed region, but also the unsprayed region.***
3. ***Containment Leakage to the penetration areas is treated by the annuls emergency exhaust system***

US-APWR

Design Certification Application Orientation

Detail of FSAR

Tier2: Chapter 7, 8 and 18

January 15,16, 2008

Mitsubishi Heavy Industries, Ltd.

Contents

- Chapter 7: Instrumentation and Controls (I&C)
- Chapter 8: Electric Power
- Chapter 18: Human Factor Engineering (HFE)
  - ✓ For each Chapter
    1. Content Overview
    2. System Descriptions
    3. Analysis and Evaluations
- Summary

Presenter

Ken Scarola
Engineering Manager
Mitsubishi Nuclear Energy Systems, Inc.

Chapter 7 – Content Overview

- **Chapter 7 includes the following descriptions:**
  - ✓ All safety related I&C systems
  - ✓ Non-safety I&C systems which are important in maintaining safe normal operating conditions and which support abnormal plant conditions
  - ✓ Intra and inter system data communications
- **Descriptions focus on features related to:**
  - ✓ Performance
  - ✓ Reliability
  - ✓ Maintainability
  - ✓ Failure modes
- **Format based on RG 1.206**
- **Content based on RG 1.206 and SRP**

I&C System Overview (7.1)

- Common digital microprocessor based platform for safety and non-safety I&C (no electro-mechanical relays)
- Diverse Actuation System based on analog technology
- Complete four train redundancy for safety I&C with each division in separate fire area
- Distributed architecture for non-safety I&C with redundancy
- Fully multiplexed and duplicated signal transmission networks from local areas to I&C equipment rooms and between I&C systems/components
- Fully computerized Main Control Room and Remote Shutdown Room with no reliance on local controls

I&C System Overview (7.1)

- The digital I&C and HSI systems for the US-APWR are essentially the same as the I&C and HSI systems for nuclear plants in Japan
  - ✓ First installation for non-safety digital I&C in 1987
  - ✓ Average 10 years operation for five operating plants
  - ✓ Applied to all non-safety I&C, 50 applications per plant
  - ✓ Over 20 million hours total operating experience
  - ✓ No un-expected shut down caused by I&C since 1992
  - ✓ No system malfunction caused by S/W or H/W failure
  - ✓ The same digital platform is currently being applied to safety and HSI systems of the Japanese APWR, and safety and HSI systems currently being implemented for plant modernization.
    - First safety and HSI application: Tomari #3, C/O 2009

Main Control Room (7.1)

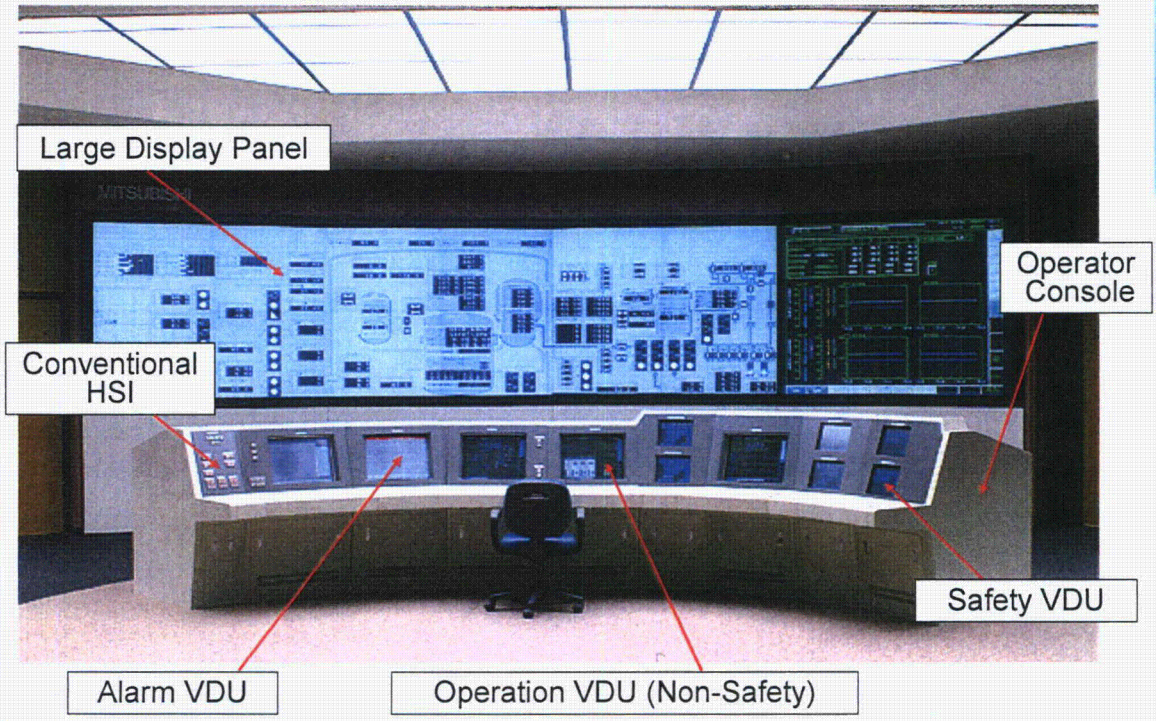

Reactor Protection System (7.2)

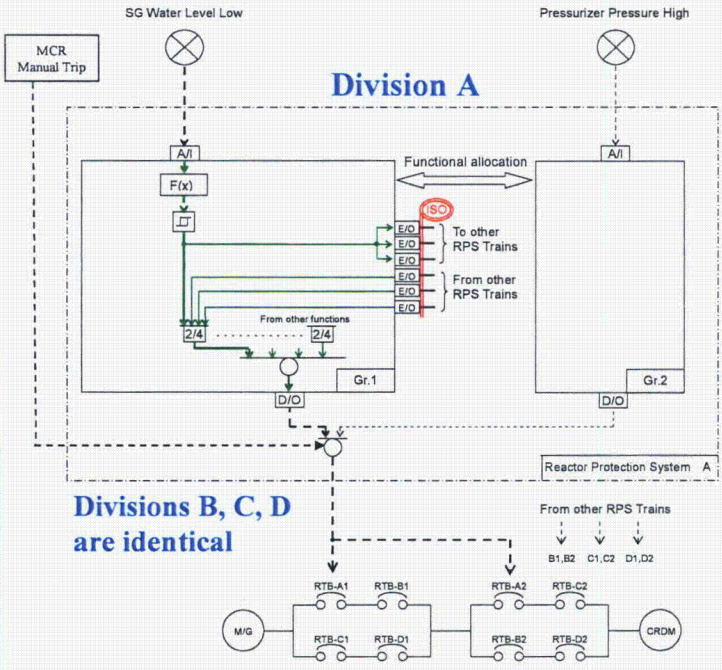

Two processors in each division provide two functionally diverse trips for each postulated accident.

Note
- : Bus
- : Data-Link
- : Hard wired
- E/O : Electrical to optical converter or Optical to electrical converter
- BUS : BUS interface
- ISO : Isolation point

Configuration of Reactor Protection System

ESFAS, Safety Logic System, Safety HSI (7.3 – 7.6)

SLS and HSI support interlocks, accident monitoring and mitigation, safe shutdown

Two processors in each division provide redundancy for unrestricted on-line maintenance

All solid state outputs

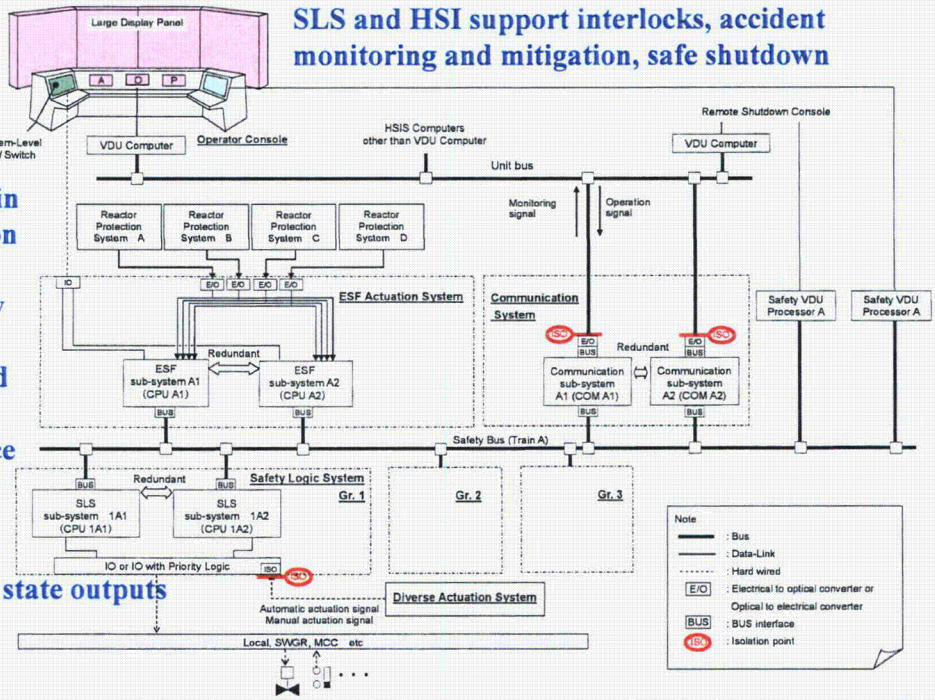

Configuration of Engineered Safety Features Actuation System and Safety Logic System

Reactor Control System (7.7)

Functional grouping ensures all failures are bounded by safety analysis

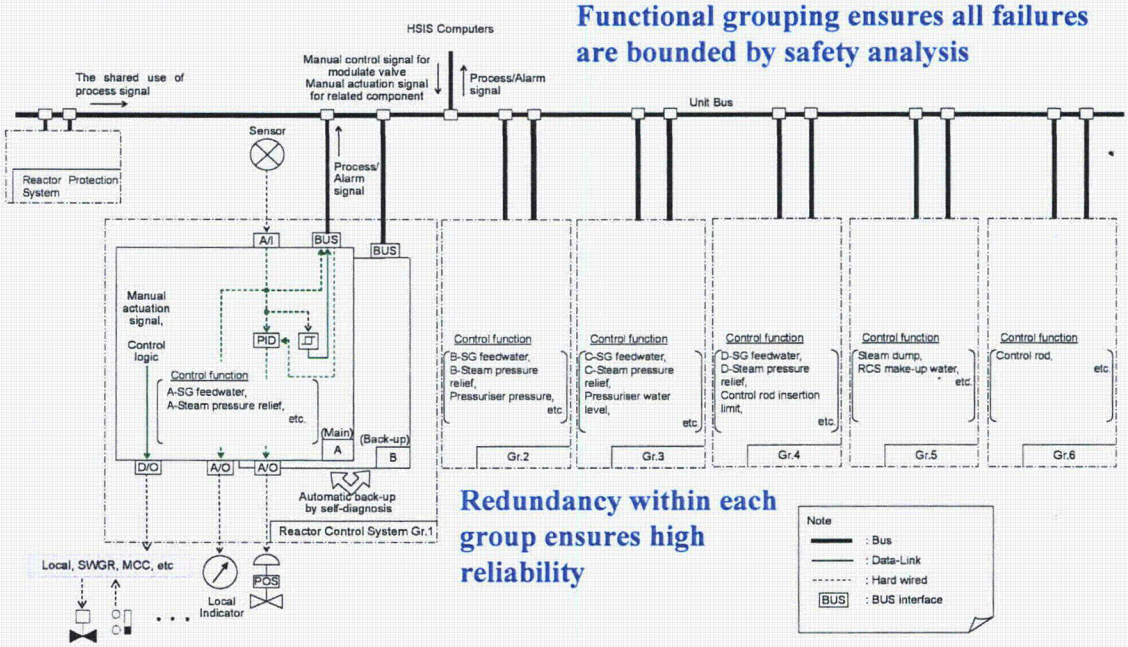

Redundancy within each group ensures high reliability

Configuration of Reactor Control System

Diverse Actuation System (7.8)

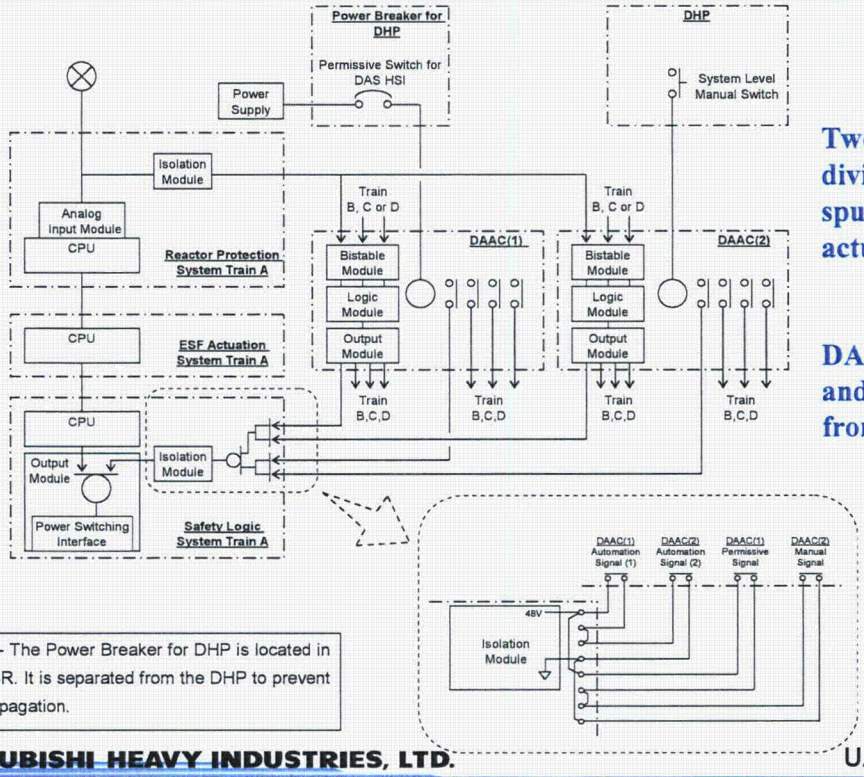

Two DAS division prevents spurious actuation.

DAS is diverse and isolated from PSMS.

NOTE - The Power Breaker for DHP is located in the MCR. It is separated from the DHP to prevent fire propagation.

Data Communication (7.9)

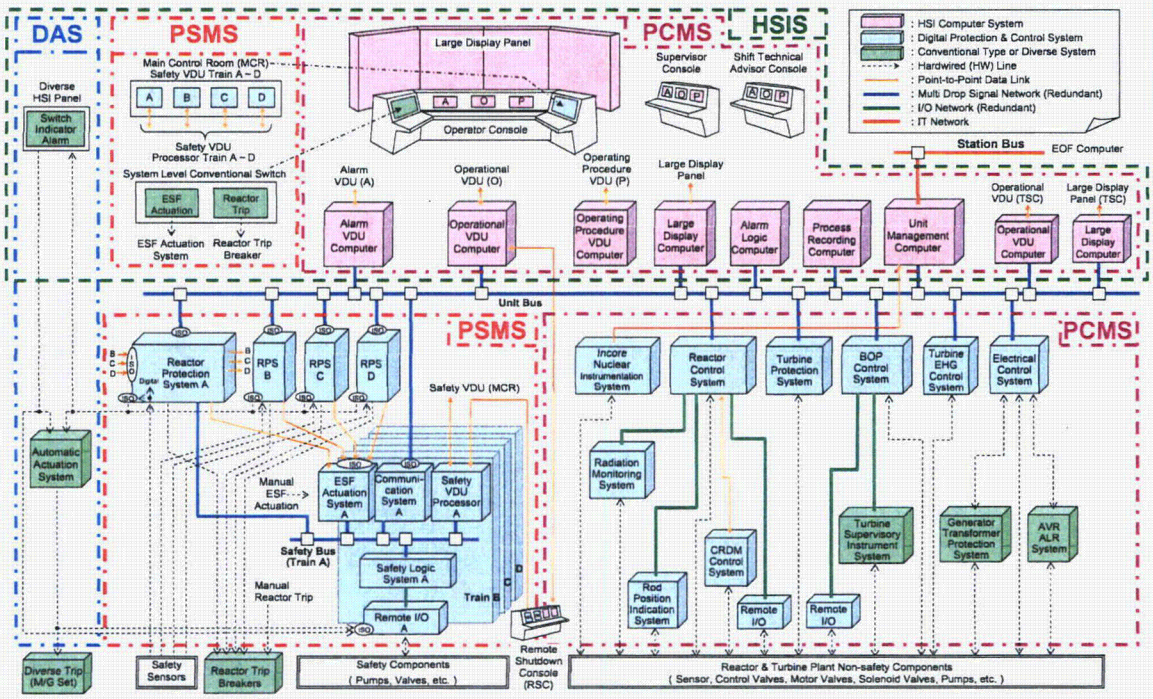

DAS : Diverse Actuation System PSMS : Protection and Safety Monitoring System HSIS : Human System Interface System PCMS : Plant Control and Monitoring System

Chapter 7 - Analysis & Evaluations

- **Chapter 7 descriptions include following design details:**
  - ✓ Redundancy, separation and isolation
  - ✓ Data communication independence and performance
  - ✓ Maintenance and operating bypasses
  - ✓ Test coverage (self-test and manual)
  - ✓ Access controls and cyber security
  - ✓ Failure modes and effects
  - ✓ Coping with common cause failures
  - ✓ Hardware and software quality (Software life cycle)
  - ✓ Hardware qualification and reliability
- **Chapter 7 describes the following design processes:**
  - ✓ Setpoint determination
  - ✓ Software life cycle (basic and application)

MELTAC Platform

- **Mitsubishi Electric Total Advanced Controller**
- **Simple Design**
  - ✓ Modular and Structured Architecture
  - ✓ Single Task execution
  - ✓ Cyclical Processing with No Interrupts
- **Quality Assurance and Control**
  - ✓ Designed specifically for Nuclear Applications
  - ✓ Under control of Nuclear QA/QC
  - ✓ Fully owned and life cycle managed by Mitsubishi

Chapter 8 – Content Overview

- **Chapter 8 includes the following descriptions:**
  - ✓ On-site safety related AC and DC power systems
  - ✓ On-site non-safety AC and DC power systems
  - ✓ Interface to off-site power distribution system
- **Descriptions focus on features related to:**
  - ✓ Reliability
  - ✓ Maintainability
  - ✓ Failure modes
- **Format based on RG 1.206**
- **Content based on RG 1.206 and SRP**

Power System Overview (8.1)

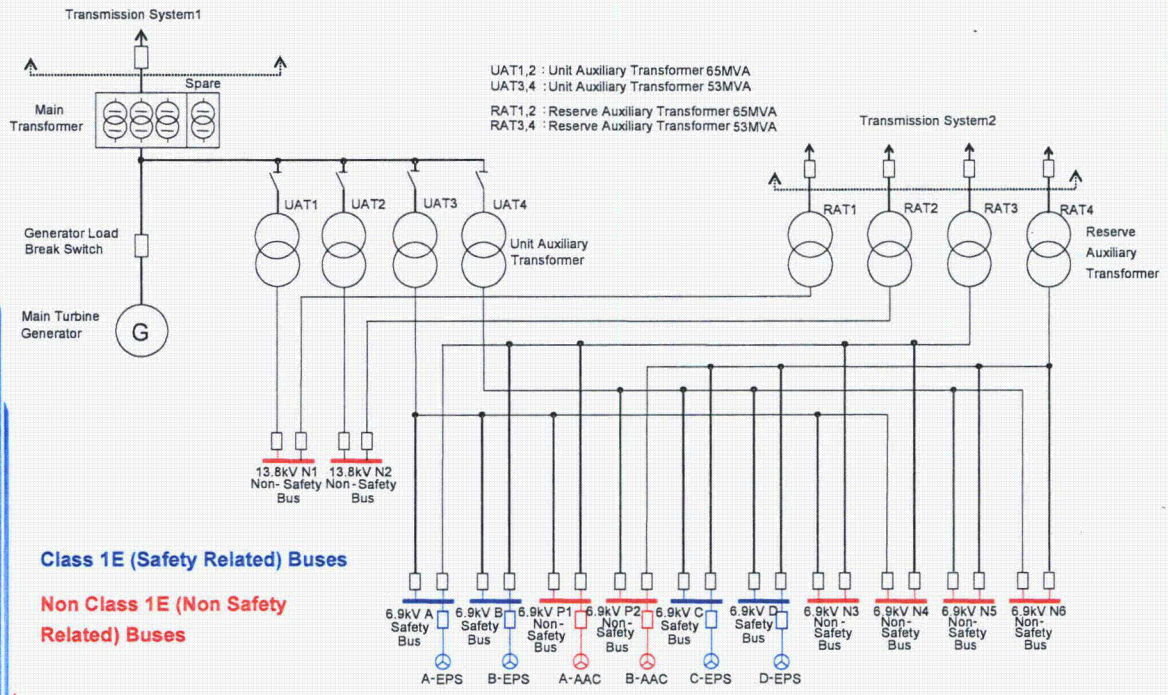

Offsite Power System (8.2)

- **Design Features**
  - ✓ The two (2) sources of offsite power provided.
    - a) Main Transformer through Unit Auxiliary Transformers (UAT)
    - b) Reserve Auxiliary Transformer (RAT)
  - ✓ The two (2) offsite power supply circuits are independent and physically separated.
  - ✓ Both offsite power supply circuits have enough capacity to achieve their safety related function during a Design Basis Event (DBE) and meet the requirement of the applicable GDC's.

Onsite AC Power System (8.3)

- **Design Features**
  - ✓ Class 1E AC electrical power system consists of four (4) separate trains. Each train includes one Class 1E Emergency Power Source (EPS)
  - ✓ On-Line Maintenance of any EPS is allowed with Single-Failure Criterion remaining satisfied
  - ✓ "Permanent" buses supplied from Alternate AC Power Source (AAC) are provided
  - ✓ Non-safety related loads are not supplied from class 1E buses. Required non-safety related loads are supplied from AAC in LOOP condition
  - ✓ AACs provide power to all electrical loads that are required to bring and maintain the unit in safe-shutdown mode upon the SBO

Gas Turbine Generator (8.3)

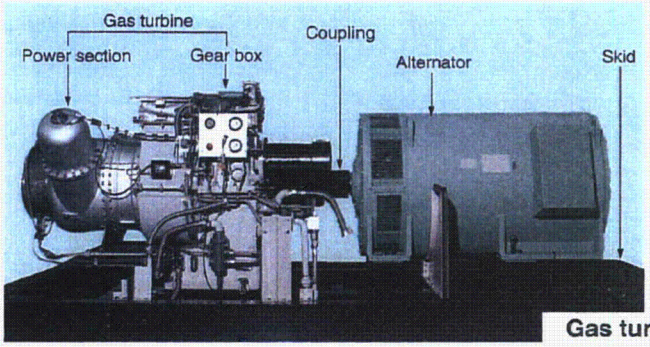

MHI selected

Gas Turbine Generators

for EPS and ACC

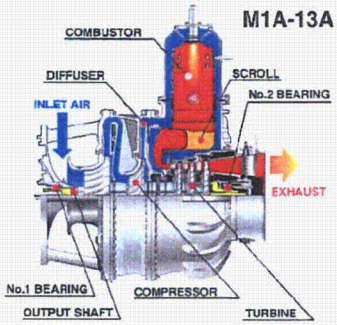

Gas turbine package with exhaust silencer

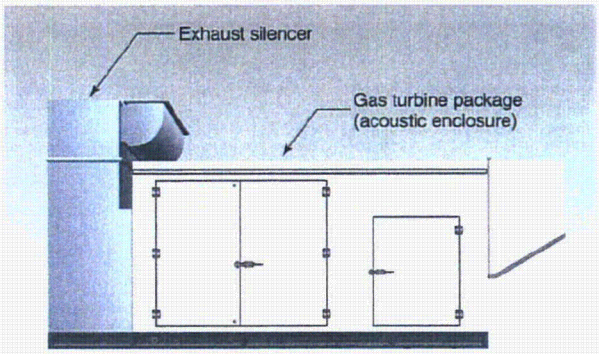

Why Gas Turbine Generators

✓GT/G has been selected based on reliability and maintainability improvements when compared to DG

	Gas Turbine Generator	Diesel Generator
Space	Compact	Large
Cooling Water	Not Required	Required
Routine Maintainability	1/3 the parts of a DG	Complex
Large Scale Overhaul	Once or twice during plant life	Periodic Overhaul Required
Reliability (failure/demand)	10^{-4} based on Japanese experience	10^{-3}
Starting Time	40 sec	10 sec

✓Longer start time of GT/G is accommodated by the Advanced Accumulator design of US-APWR which allows 100 sec

Station Blackout (8.4)

- **Basic Concept for Coping with SBO**
  - ✓ The AACs are available in the event of SBO, when all offsite power sources and EPSs are not available to bring the unit to a safe shutdown condition and maintain that status
- **Design Basis**
  - ✓ AACs of a different type (Starting System, Capacity etc.) and are provided to minimize the potential for common mode failure with either the offsite power or the EPS system
  - ✓ The AAC is a non-class 1E gas turbine-generator package connected to a 6.9kV AC "Permanent" bus
  - ✓ The AAC supplies power to loads on any class 1E bus through tie line circuits during SBO
  - ✓ The AAC supplies power to loads for 8 hours during SBO

Chapter 8 - Analysis & Evaluations

- **Chapter 8 descriptions include the following design details:**
  - ✓ Redundancy, separation and isolation
  - ✓ Failure modes and effects
  - ✓ Hardware quality
  - ✓ Hardware qualification and reliability
- **Chapter 8 describes the following design processes:**
  - ✓ **Class 1E qualification and tests of Gas Turbine Generator**

Chapter 18 – Content Overview

- **Chapter 18 includes the following descriptions:**
  - ✓ Human Factors Engineering process
  - ✓ Human Systems Interface design features
- **Descriptions focus on features and processes intended to:**
  - ✓ Enhance human performance
  - ✓ Reduce potential for errors in critical human actions
- **Format based on RG 1.206**
- **Content based on RG 1.206 and SRP**

HFE Design Process Overview (18.1)

- **The US-APWR HSI design is based on the HSI for Japanese plants, which has been developed in phases over the past twenty years**
- **The Japanese HSI was developed following the NUREG 0711 HFE process**
  - ✓ This included dynamic validation by more than 46 Japanese operating crews (138 operators)
  - ✓ V&V included operability by one RO / one SRO
- **The US-APWR HFE program reassesses each HFE program element, with emphasis on changes from prior experience**
  - ✓ DCD describes applicability of prior HFE and new activities specific to US-APWR, including additional dynamic validation by US operators using a full scope simulator.

Operating Experience Review (18.2)

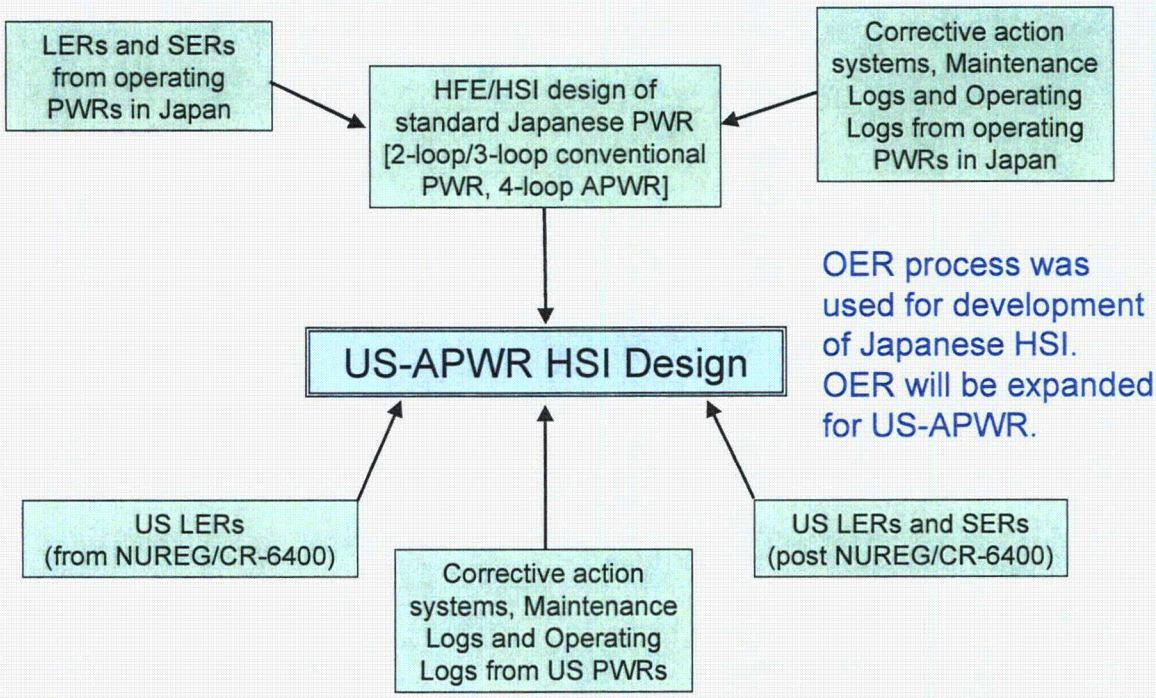

OER process was used for development of Japanese HSI. OER will be expanded for US-APWR.

Function, Task, Reliability Analysis (18.3, 4, 6)

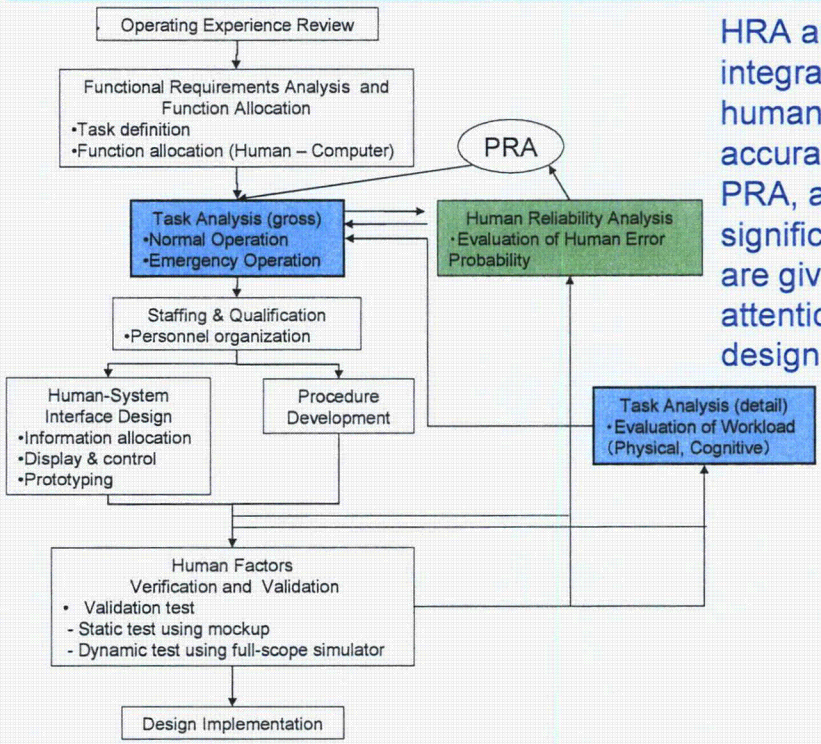

HRA and PRA are integrated to ensure human actions are accurately modeled in the PRA, and to ensure risk significant human actions are given increased attention during the HFE design process.

Operator Staffing (18.5)

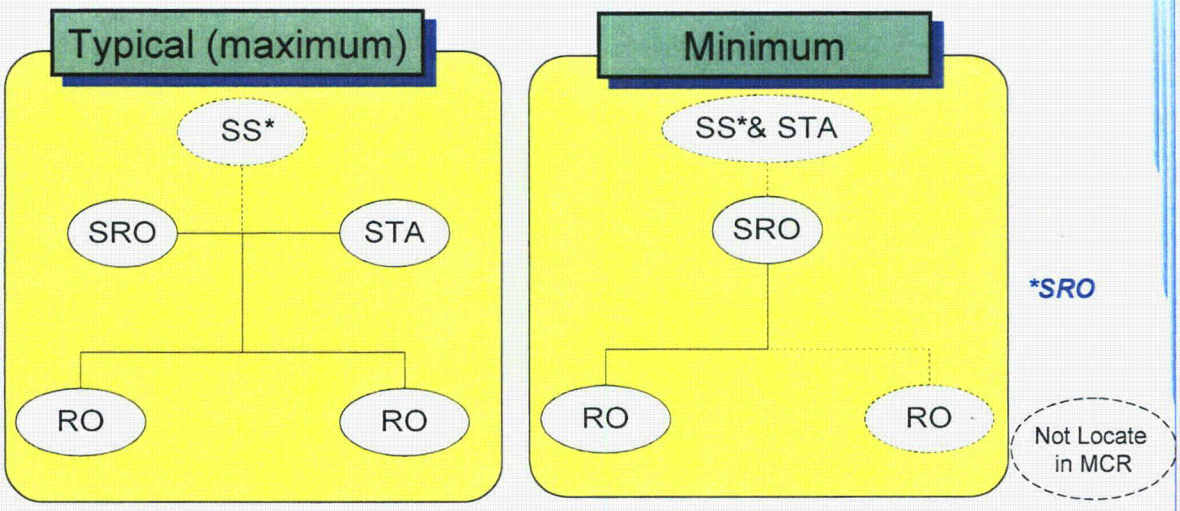

- Necessary number of Reactor Operators (RO) is reduced from 2 to 1 by reduction of Workload for Operation
- Minimum staff complies with 10 CFR 50.54(m)

HSI Design (18.7)

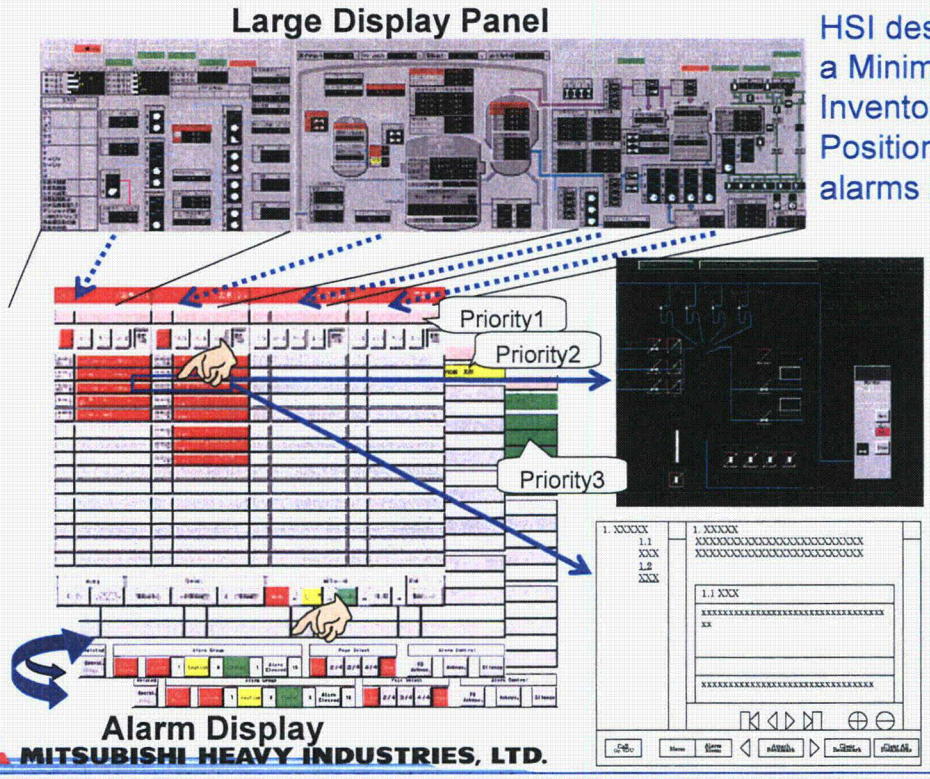

HSI design includes a Minimum Inventory of Fixed Position indications, alarms and controls.

HSI Design (18.7)

- Safety and Non-safety components can be operated from the same screen

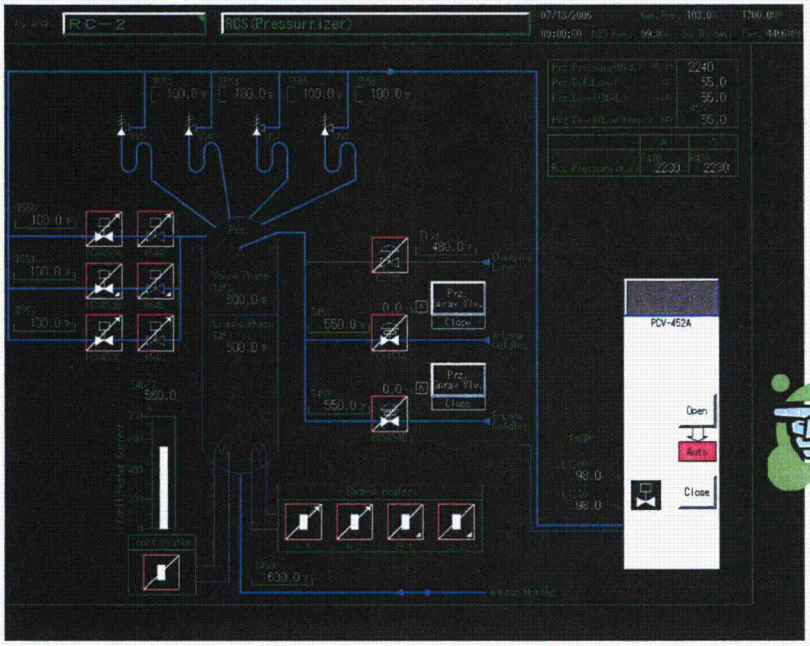

Design consistency between non-safety and safety VDUs facilitates operator transition between HSI features.

Procedures and Training (18.8, 9)

- Training and procedures encompass the full range of personnel, functions and systems which may affect plant safety.
- Procedures and training material are developed based on documented Writer's Guides
- Computer based procedures include hot links which display plant information and controls on adjacent screens
- Design consistency between computer and paper procedures facilitates operator transition for degraded HSI conditions.
- Procedures are validated through dynamic simulation

HSI Validation (18.10)

HSI Simulation Facility – Pittsburgh (April 2008)

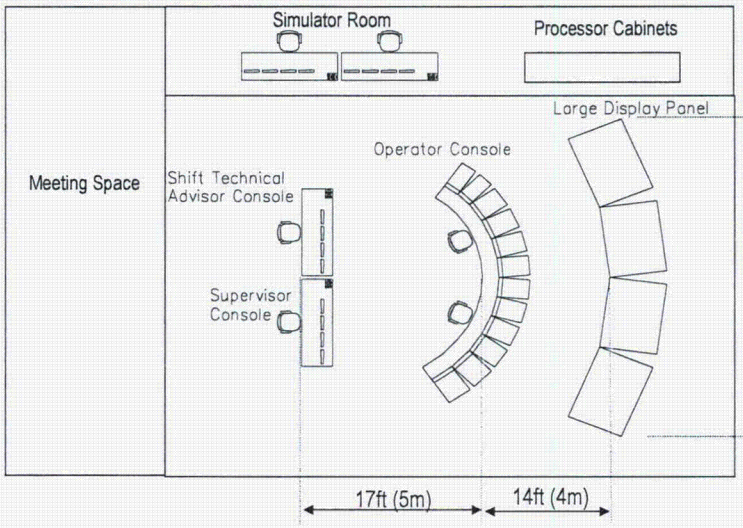

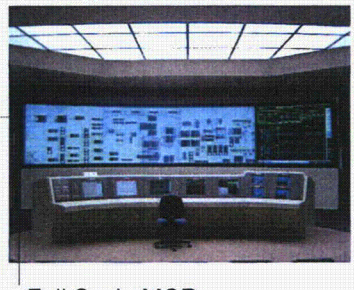

- Full Scale MCR
- Interactive, full functionality VDUs
- High fidelity dynamic plant model

Used initially to validate Japanese HSI design by US operators (12/2008)

Used later to validate HSI feature changes for US-APWR (6/2009)

Used to validate final US-APWR HSI, including all displays, alarms, controls and procedures (ITAAC Closure)

Implementation and Performance Monitoring (18.11, 12)

- **Recurring implementation and changes to the HSI after validation are in accordance with the Design Implementation process**
  - ✓ The design change process is based on a risk assessment including the risk significance of effected human actions
- **Human performance is monitored on an ongoing basis to ensure:**
  - The HSI does not create human performance problems
  - Actual human performance is consistent with plant analysis assumptions regarding credited manual actions

Summary

- **MHI I&C, HSI and Electrical Systems provide significant advancements to**
  - ✓ improve plant safety and availability
  - ✓ reduce operations and maintenance costs
- **The systems employ proven designs with many years of demonstrated reliability**
- **MHI suggests frequent technical meetings to minimize misunderstandings and thereby facilitate an efficient regulatory review process**
- **MHI invites the NRC staff to visit the following facilities**
  - ✓ MELCO digital I&C factory (Kobe)
  - ✓ Gas-turbine generator qualification test facility (North Carolina)
  - ✓ HSI simulation facility (Pittsburgh)

US-APWR

Design Certification Application Orientation

Detail of FSAR

Tier2: Chapter 9

January 15,16, 2008

Mitsubishi Heavy Industries, Ltd.

Presenter

Andrew B. Johnson

Principal Engineer

Mitsubishi Nuclear Energy Systems, Inc.

Contents

1. Overview of Chapter
   - ✓ Title of Chapter
   - ✓ Scope of Chapter
2. Contents of Subsections
3. Design features (for example)

1. Overview of Chapter

➢Title of Chapter

Chapter 9: AUXILIARY SYSTEMS

➢Scope of Chapter

This Chapter includes the following Sections and Attachment :

- 9.1 : Fuel Storage and Handling Systems
- 9.2 : Water Systems
- 9.3 : Process Auxiliaries
- 9.4 : Air Conditioning, Heating, Cooling, and Ventilation Systems
- 9.5 : Other Auxiliary Systems
- Attachment 9A : Fire Hazard Analysis

2. Contents of Subsections

➢Section 9.1 : Fuel Handling and Storage Systems

Regulatory Guide 1.206	US-APWR DCD
9.1.1 Criticality Safety of Fresh and Spent Fuel Storage	9.1.1 Criticality Safety of New and Spent Fuel Storage
9.1.2 New and Spent Fuel Storage	9.1.2 New and Spent Fuel Storage
9.1.3 Spent Fuel Pool Purification and Cooling System	9.1.3 Spent Fuel Pit Purification and Cooling System
9.1.4 Light Load Handling System (Related to Refueling)	9.1.4 Light Load Handling System (Related to Refueling)
9.1.5 Overhead Heavy Load Handling System	9.1.5 Overhead Heavy Load Handling System
-	9.1.6 COL information
-	9.1.7 References

2. Contents of Subsections

➢Section 9.2 : Water Systems

Regulatory Guide 1.206	US-APWR DCD
9.2.1 Station Service Water System	9.2.1 Essential Service Water System
9.2.2 Cooling System for Reactor Auxiliary	9.2.2 Component Cooling Water System
9.2.3 [Reserved]	9.2.3 [Reserved]
9.2.4 Potable & Sanitary Water Systems	9.2.4 Potable & Sanitary Water Systems
9.2.5 Ultimate Heat Sink	9.2.5 Ultimate Heat Sink
9.2.6 Condensate Storage Facilities	9.2.6 Condensate Storage Facilities
-	9.2.7 Chilled Water Systems
-	9.2.8 Turbine Component Cooling Water System
-	9.2.9 Non-Essential Service Water System
-	9.2.10 COL information
-	9.2.11 References

2. Contents of Subsections

➢Section 9.3 : Process Auxiliaries

Regulatory Guide 1.206	US-APWR DCD
9.3.1 Compressed Air Systems	9.3.1 Compressed Air and Gas Systems
9.3.2 Process and Postaccident Sampling Systems	9.3.2 Process and Postaccident Sampling Systems
9.3.3 Equipment and Floor Drainage System	9.3.3 Equipment and Floor Drainage Systems
9.3.4 Chemical and Volume Control System (PWR Only)	9.3.4 Chemical and Volume Control System
9.3.5 Standby Liquid Control System (BWR Only)	9.3.5 Not Applicable for US-APWR
-	9.3.6 COL information
-	9.3.7 References

2. Contents of Subsections

➢Section 9.4 : Air Conditioning, Heating, Cooling, and Ventilation Systems

Regulatory Guide 1.206	US-APWR DCD
9.4.1 Control Room Area Ventilation System	9.4.1 Main Control Room Heating, Ventilation & Conditioning System
9.4.2 Spent Fuel Pool Area Ventilation System	9.4.2 Spent Fuel Pool Area Ventilation System
9.4.3 Auxiliary & Radwaste Area Ventilation System	9.4.3 Auxiliary Building Ventilation System
9.4.4 Turbine Building Area Ventilation System	9.4.4 Turbine Building Area Ventilation System
9.4.5 Engineered Safety Feature Ventilation System	9.4.5 Engineered Safety Feature Ventilation System
	9.4.6 Containment Ventilation System
-	9.4.7 COL information
-	9.4.8 References

2. Contents of Subsections

➢Section 9.5 : Other Auxiliary Systems

Regulatory Guide 1.206	US-APWR DCD
9.5.1 Fire Protection Program	9.5.1 Fire Protection Program
9.5.2 Communication System	9.5.2 Communication System
9.5.3 Lighting System	9.5.3 Lighting System
9.5.4 Diesel Generator (DG) Fuel Oil Storage & transfer System	9.5.4 Gas Turbine Generator Fuel Oil Storage & transfer System
9.5.5 DG Cooling Water System	9.5.5 Not Applicable for US-APWR
9.5.6 DG Starting Air System	9.5.6 Gas Turbine Generator Starting Air System
9.5.7 DG Lubrication System	9.5.7 Gas Turbine Lubrication System
9.5.8 DG Combustion Air Intake & Exhaust System	9.5.8 GTG Combustion Air Intake and Exhaust System
-	9.5.9 COL information
-	9.4.10 References

3. Design Features (for example)

➢ **Support Systems for Safe Shutdown**

- ✓ Component Cooling Water Systems (CCWS)
- ✓ Essential Service Water Systems (ESWS)
- ✓ HVAC systems , etc.

➢ **Design Features of CCWS & ESWS**

- ✓ CCWS and ESWS constitute a safety cooling chain
- ✓ 4 Train configuration
- ✓ Allows On Line Maintenance assuming single failure

3. Design Features (for example)

➢Component Cooling Water System

- ✓ 4 safety train configuration
  (Each train includes 1 CCWP and 1 CCW HX)
- ✓ Separated into 2 independent sections
  (Each section has 1 CCW surge tank)
- ✓ The other safety components (e.g.;SFP HX) are supplied with cooling water from 2 of 4 safety trains

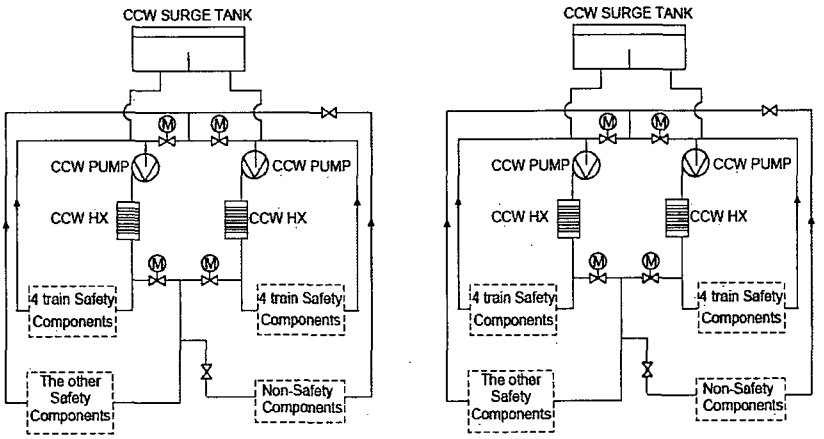

3. Design Features (for example)

➢Essential Service Water System

- ✓ Completely independent 4 train configuration
  (Each train includes 1 ESWP)
- ✓ Raw water cooling for the CCW HX and Essential Chiller Unit

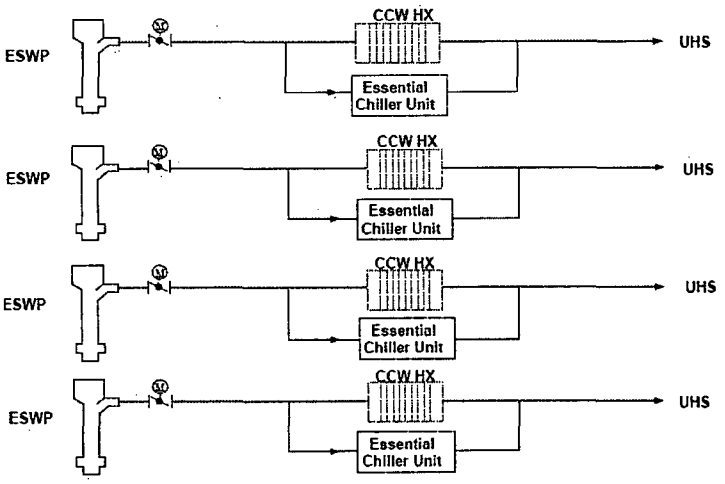

US-APWR

Design Certification Application Orientation

Detail of FSAR

Tier2: Chapter 10

January 15,16, 2008

Mitsubishi Heavy Industries, Ltd.

Presenter/Section Leader

Yoshihiro Minami

Engineering Manager
Nuclear Turbine Plant Engineering Section
Water Reactor Engineering Department
Nuclear Energy Systems Headquarters
Mitsubishi Heavy Industries, LTD.

Contents

1. Overview of Chapter

- Title of Chapter
- Scope of Chapter
- Overall System Flow Diagram

2. Design Features

- Significant Design Features
- System Design Features

1. Overview of Chapter

- **Title of Chapter 10**
  - ✓ STEAM AND POWER CONVERSION SYSTEM
- **Scope of Chapter**
  - ✓ This chapter includes the design description of the systems and the components for power conversion
  - ✓ This chapter consists of 4 sections:
    - Section 10.1 : Summary Description
    - Section 10.2 : Turbine-Generator
    - Section 10.3 : Main Steam Supply System
    - Section 10.4 : Other Features of Steam and Power Conversion System
  - ✓ This chapter deal with 13 systems in total

1. Overview of Chapter

➢ 10.1 Overall System Flow Diagram

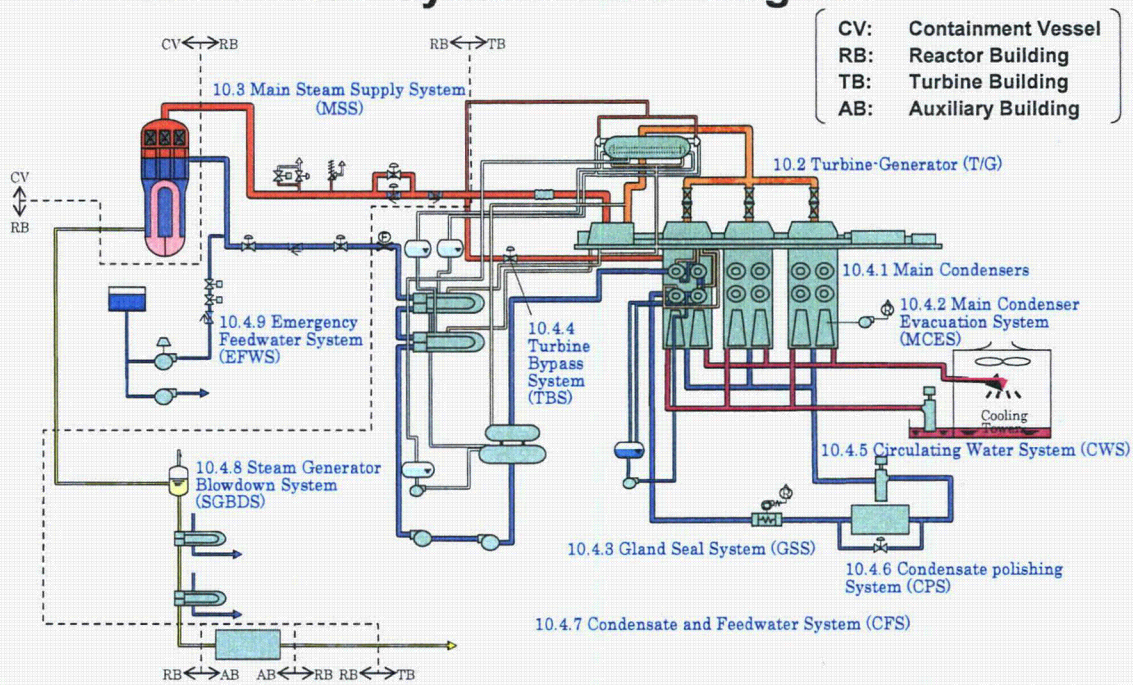

2. Design Features

➢ 10.1 Significant Design Features

Rated NSSS power (MWt)	4,466
Steam Generator Outlet Press. (psig)	957
Quantity of Steam Generator (SG)	4
Total steam flow rate from SG (lb/hr)	20,200,000
Steam Turbine Rating	
Type of Steam Turbine (-)	TC6F
Rotating Speed (rpm)	1,800
Generator Output (MWe)	1,700
Exhaust Pressure (inHga)	1.5
Generator Rating	
Capacity (MVA)	1,900
Power Factor (-)	0.9

2. Design Features

➢ 10.2 Turbine-Generator (T/G)

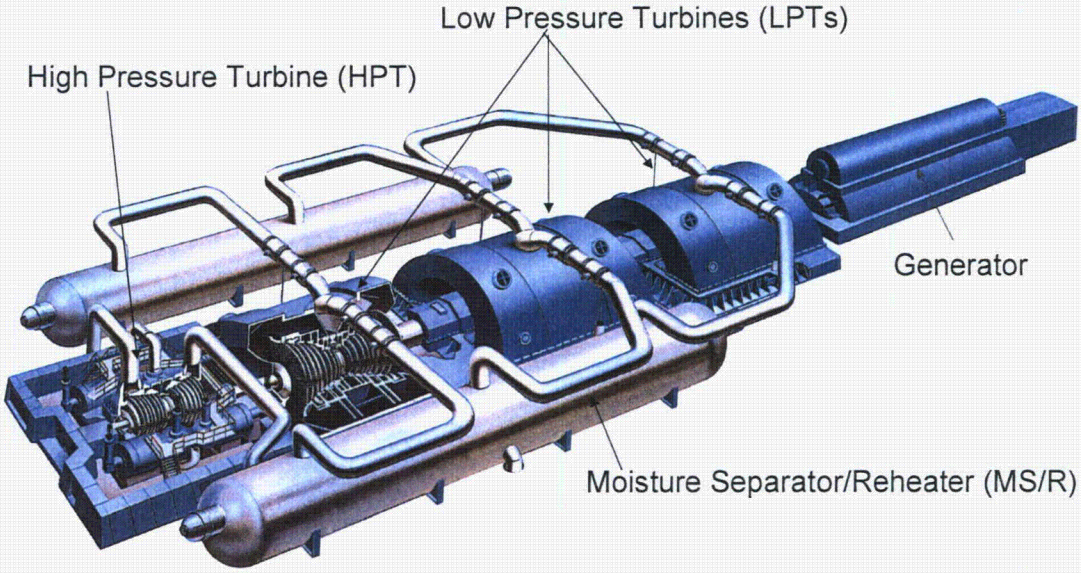

2. Design Features

➢ 10.2 Turbine-Generator (T/G)

- ✓ The T/G is non safety-related system
- ✓ The T/G could be a potential source of a high-energy turbine missile, which could cause damage to safety-related equipment or systems
- ✓ Turbine and control/protection system are to be designed so that probability of turbine missile generation probability satisfies the requirement of SRP (less than 1×10^{-5} per year assuming proper inspection and test frequency)
- ✓ The orientation of the T/G is such that a high-energy missile to be directed at an approximately 90 degree angle away from the safety-related structures

2. Design Features

➢ 10.3 Main Steam Supply System (MSS)

- ✓ The MSS is to transport steam from the SGs to the HPT and to the MS/R
- ✓ The MSS is provided with safety-related main steam isolation valves (MSIVs) and main steam bypass isolation valves (MSBIVs) in each main steam line for the purpose of:
  - Isolating the secondary side of the SGs to prevent the uncontrolled blowdown of more than one SG
  - Isolating non safety-related portions of the system

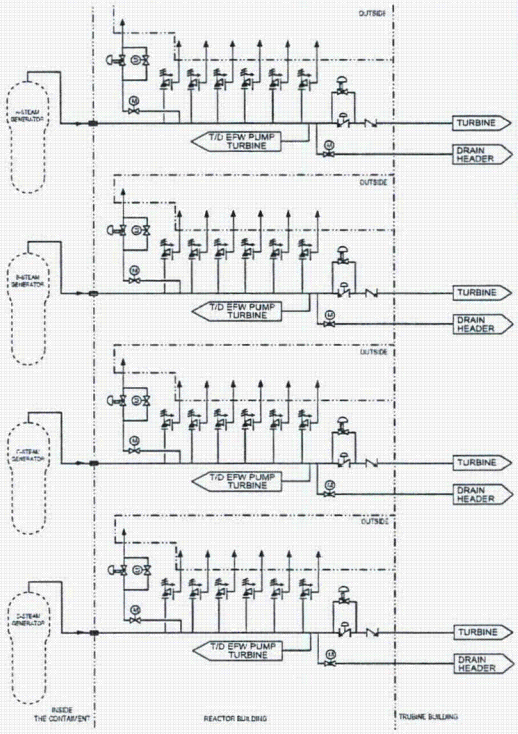

2. Design Features

➢ 10.4.1 Main Condenser

- ✓ The main condenser is non safety-related system
- ✓ The main condenser functions to condensate and deaerate the exhaust steam from the main turbine and provide a heat sink for the turbine bypass system

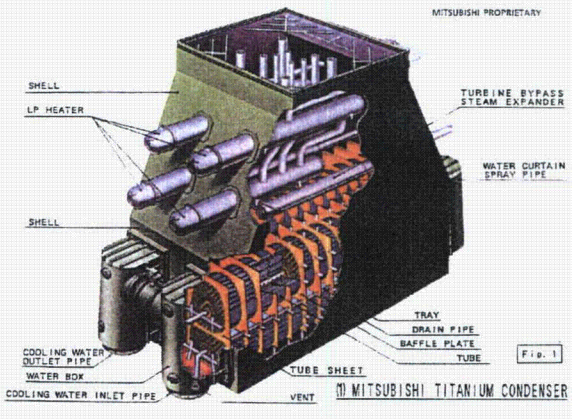

2. Design Features

➢ 10.4.2 Main Condenser Evacuation System (MCES)

- ✓ The MCES is non safety-related system.
- ✓ The MCES removes noncondensable gases from the main condenser during plant startup and normal operation
- ✓ The MCES establishes and maintains a vacuum in the main condenser

2. Design Features

➢ 10.4.3 Gland Seal system (GSS)

- ✓ The GSS is non safety-related system.
- ✓ The GSS prevents air leakage into and steam leakage out of the casing of the steam turbine
- ✓ Sealing steam is supplied to the turbine shaft from either the Auxiliary Steam Supply System (ASSS) or the MSS
- ✓ The system returns the steam-air mixture from the turbine glands to the gland steam condenser and exhausts non-condensable gases into the atmosphere

2. Design Features

➢ 10.4.4 Turbine Bypass system (TBS)

- ✓ The TBS is non safety-related system.
- ✓ The TBS is part of the MSS and provides capability to send the main steam flow from the SGs to the main condenser bypassing the main turbine
- ✓ The TBS is designed to sustain a 100% load rejection without reactor trip, and not requiring actuation of the main steam relief valves, main steam safety valves and pressurizer safety valves

2. Design Features

➢ 10.4.5 Circulating Water System (CWS)

- ✓ The CWS is non safety-related system.
- ✓ The CWS supplies cooling water to remove the heat from the main condenser under various plant operating conditions and site environmental conditions
- ✓ The CWS removes the plant heat during startup, normal operation, shutdown, transient condition, or turbine trip

2. Design Features

➢ 10.4.6 Condensate Polishing System (CPS)

- ✓ The CPS is non safety-related system.
- ✓ The CPS is designed to remove dissolved ionic solids and impurities from the condensate and assists in the removal of corrosion products

2. Design Features

➢ 10.4.7 Condensate and Feedwater System (CFS)

- ✓ The CFS provides feedwater at the required temperature, pressure, and flow rate to the SGs
- ✓ The safety-related function of the CFS is to provide containment and feedwater isolation following a design basis accident
- ✓ The system provides main feedwater isolation valves (MFIVs) in the main feedwater lines
- ✓ The MFIVs close to limit the mass and energy release to the containment

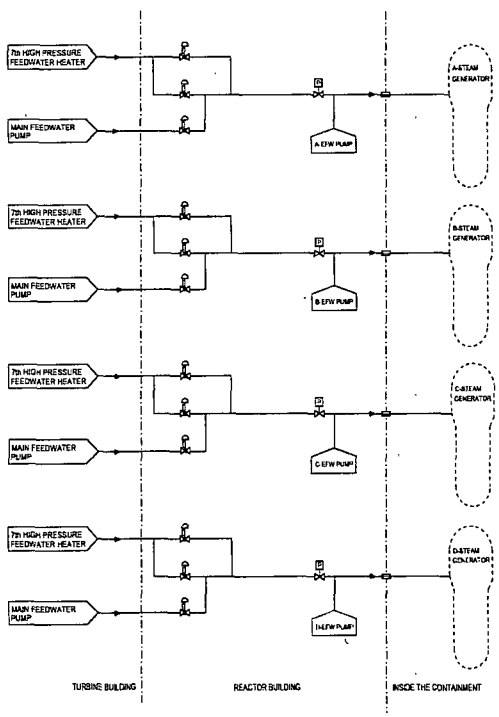

2. Design Features

- **10.4.8 Steam Generator Blowdown System (SGBDS)**
  - ✓ The SGBDS assists in maintaining secondary side water chemistry within acceptable limits during normal operation and during anticipated operational occurrences due to main condenser tube leakage or primary to secondary steam generator tube leakage
  - ✓ The SGBDS has a safety-related function to isolate the secondary side of the SGs using two isolation valves in series in the blowdown line from each SG
  - ✓ This provides a heat sink for a safe shutdown or to mitigate the consequences of a design basis accident

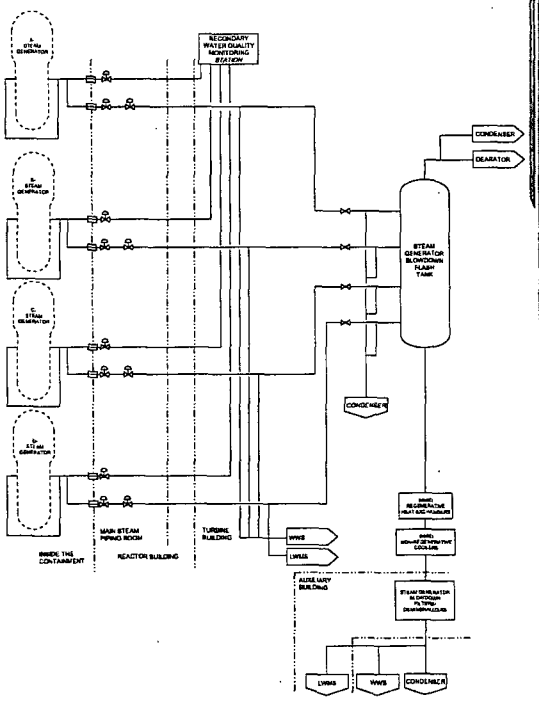

2. Design Features

- **10.4.9 Emergency Feedwater System (EFWS)**
  - ✓ The EFWS is a safety-related system
  - ✓ The EFWS is designed to supply feedwater to the SGs and remove reactor core decay heat following transient conditions or postulated accidents such as:
    - Reactor trip
    - Loss of offsite power (LOOP)
    - Loss of main feedwater
    - Feedwater line break (FLB)
    - Main steam line break (MSLB)
  - ✓ The EFWS consists of two motor-driven emergency feedwater (EFW) pumps, two turbine-driven EFW pumps, emergency feedwater pits and other necessary equipment

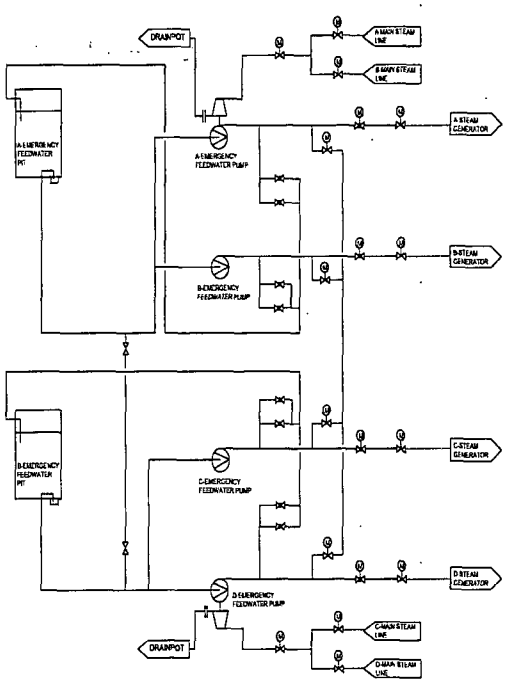

2. Design Features

- **10.4.10 Secondary Side Chemical Injection System (SCIS)**
  - ✓ The SCIS is non safety-related system.
  - ✓ The SCIS is designed to maintain a noncorrosive condition within the secondary loop
  - ✓ Noncorrosive condition is maintained by controlling pH and dissolved oxygen content in the secondary side by:
    - Maintaining alkaline pH by ammonia injection
    - Scavenging dissolved oxygen with hydrazine injection

2. Design Features

- **10.4.11 Auxiliary Steam Supply System (ASSS)**
  - ✓ The ASSS is non safety-related system.
  - ✓ The ASSS is designed to provide the steam required for plant use during plant startup, shutdown, and normal operation
  - ✓ Steam is supplied from either the auxiliary boiler or the steam converter

Summary

- Chapter 10 deals with the steam and power conversion system
- The steam and power conversion system is designed to remove the heat energy from the reactor coolant system and to convert it to electrical energy in a safe manner
- The turbine and control/protection systems are designed so that the probability of turbine missile is less than the number specified in SRP

US-APWR

Design Certification Application Orientation

Detail of FSAR

Tier2: Chapter 11(Dose Evaluation)

January 15,16, 2008

Mitsubishi Heavy Industries, Ltd.

Presenter

Hiromasa Nishino

Engineering Manager
Radiation Safety Engineering Section
Reactor Safety Engineering Department
Nuclear Energy Systems Headquarters
Mitsubishi Heavy Industries, LTD.

Contents

1. Overview of Chapter
   - ✓ Title of Chapter
   - ✓ Scope of Chapter
2. Design Features
3. Dose Evaluation Methods, Criteria and Results
4. Summary

1. Overview of Chapter

➢ Title of Chapter

Chapter 11: Radioactive Waste Management

➢ Scope of Chapter

This chapter includes following items;

- **Source Term**
- **Liquid Waste Management System (LWMS)**
- **Gaseous Waste Management System (GWMS)**
- **Solid Waste Management System (as presented in "Detail of FSAR Tier 2 : Chapter 11(System)")**
- **Process Effluent Radiation Monitoring and Sampling System (ditto)**

1. Overview of Chapter (Cont'd)

➢ Scope of Chapter (Cont'd)

Each item described above includes subitems as follows;

- **Source Term**
  - ✓ Design Basis Reactor Coolant and Secondary Coolant Activity
  - ✓ Realistic Reactor Coolant and Secondary Coolant Activity

Notes : Fission products and activation products are considered.

1. Overview of Chapter (Cont'd)

➢ Scope of Chapter (Cont'd)

- **LWMS (Radioactive Effluent Releases)**
  - ✓ Radioactive Effluent and Dose Calculation in Normal Operation
  - ✓ Radioactive Release due to Liquid Containing Tank Failure
- **GWMS (Radioactive Effluent Releases)**
  - ✓ Radioactive Release and Dose Calculation in Normal Operation
  - ✓ Radioactive Release and Dose Calculation due to GWMS Leak or Failure

2. Design Features

- Chapter 11 presents information on source terms of radioactive material generated within reactor core and released via LWMS and GWMS.

- Two source term models are utilized to calculate the radionuclide concentration in the reactor coolant and secondary coolant.

2. Design Features (Cont'd)

- **Design basis source term (for shielding design)**
  - Fuel defect:1 %
  - Mass balance equations described in DCD are used to calculate each nuclide activity.
- **Realistic source term (for dose evaluation during normal operation)**
  - Based on ANSI/ANS-18.1-1999(*)
  - PWR-GALE Code is used to calculate realistic source term and released activity during normal operation.

  (*)equivalent to approximately 0.2% of fuel defect

3. Dose Evaluation Methods, Criteria and Results

Evaluation Item	Evaluation Method
Individual dose during normal operation	Radioactive Releases : PWR-GALE Code Dose Evaluation (Liquid) : LADTAPII Code Dose Evaluation (Gaseous) : GASPARII Code
Dose due to GWMS leak or failure	Branch Technical Position 11-5 Considered operational mode of US-APWR
Radioactive Effluent Releases due to liquid - containing tank failure	Branch Technical Position 11-6 NUREG-0133 Appendix A (RATAF Code)

Each evaluation is performed using assumed conservative site characteristics.

3. Dose Evaluation Methods, Criteria and Results (Cont'd)

Evaluation Item	Criteria		Results
Individual dose during normal operation	10 CFR 50 Appendix I		
	Liquid		
	Total body	3 mrem/y	1.98 mrem/y*
	Organ	10 mrem/y	2.54 mrem/y**
	Gaseous (Noble gases)		
	Gamma dose in air	10 mrad/y	0.210 mrad/y
	Beta dose in air	20 mrad/y	1.62 mrad/y
	Total body	5 mrem/y	0.134 mrem/y
	Skin	15 mrem/y	1.26 mrem/y
	Gaseous (Iodine, Particulates)		
	Organ	15 mrem/y	10.2 mrem/y***
Dose due to GWMS leak or failure	Branch Technical Position 11-5 100 mrem		46 mrem
Radioactive Effluent Releases due to liquid - containing tank failure	10 CFR 20 Appendix B Table 2 Col.2 (Summation of fractions of concentration limit is equal to or less than 1.0)		0.22 ****

*Child **Child's Liver *** Child's bone **** Summation of Fractions of Concentration limit

4. Summary

- Source terms for radiation protection design and dose evaluation were evaluated using two source term models, i.e. design basis source term and realistic source term.
- Using assumed conservative site characteristics, dose evaluations were performed according to standard methods in the U.S. and complied with dose criteria.

US-APWR

Design Certification Application Orientation

Detail of FSAR
Tier2: Chapter 12

January 15,16, 2008
Mitsubishi Heavy Industries, Ltd.

Presenter

Hiromasa Nishino

Engineering Manager
Radiation Safety Engineering Section
Reactor Safety Engineering Department
Nuclear Energy Systems Headquarters
Mitsubishi Heavy Industries, LTD.

Contents

1. Overview of Chapter
   - ✓ Title of Chapter
   - ✓ Scope of Chapter
2. Design Features
3. Summary

1. Overview of Chapter

➢ Title of Chapter

Chapter 12 : Radiation Protection

➢ Scope of Chapter

This chapter includes following items;

- ✓ Considerations for ALARA*
- ✓ Radiation Sources
- ✓ Radiation Protection Design Features

*ALARA : As Low As Reasonably Achievable

1. Overview of Chapter (Cont'd)

➢ Scope of Chapter (Cont'd)

Each item described above includes subitems as follows;

- Considerations for ALARA
  - ✓ Policy Considerations
  - ✓ Design Considerations
  - ✓ Operational Considerations → COL items
- Radiation Sources
  - ✓ Contained Sources
  - ✓ Airborne Sources

1. Overview of Chapter (Cont'd)

➢ Scope of Chapter (Cont'd)

- Radiation Protection Design Features
  - ✓ Plant Design Features for ALARA
  - ✓ Shielding
  - ✓ Ventilation
  - ✓ Area Radiation and Airborne Radioactivity Monitoring Instrumentation
  - ✓ Dose Assessment

Note : Operational Radiation Protection Program
→ COL Item

2. Design Features

➢ Ensuring that Occupational Radiation exposures are ALARA

♦Policy Considerations

- Design Policies : Design by nuclear engineers with ALARA philosophy and system to cooperate plant experience
- Operation Policies : Comply with RG 1.8,8.8&8.10 → COL Item

♦Design Considerations

Equipment and Facility Layout are designed to minimize the personnel time spent in radiation areas and to minimize the radiation levels in routinely occupied plant areas

2. Design Features (Cont'd)

➢ Radiation Sources

♦Sources for Full-Power Operation

- Contained Sources : 1% Fuel defect considered
- Airborne Sources : Constant leakage from equipments to atmosphere considered

♦Sources for Shutdown

- Reactor Core : Specific Power of 32.1 MW/MTU and two cycles operation considered
- Spent Fuel : Specific Power of 32.1 MW/MTU and Burn-up of 62 GWD/MTU considered
- Incore Flux Thimbles : Activated Cobalt-60 considered

♦Sources for Design-Basis Accident

- Fission Products released into the containment based on RG 1.183 - considered

➢Radiation Protection Design Feature

- ♦Facility Design Features : All equipment is designed to ensure the Occupational Radiation Exposures ALARA
- ♦Shielding Design : designed to be in
  - Compliance with 10 CFR 20 under normal operation/shutdown
  - Compliance with 10 CFR 50 Appendix A and NUREG-0737 under Design-Basis Accident (Main Control Room)
- ♦Ventilation Design & Area Radiation and Airborne Radioactivity Monitoring Instrumentation Design : considered for ALARA
- ♦Dose Assessment
  - Occupational Exposure : about 70 Person-rem/year
  - Post-Accident Actions : Radiation Exposures in Post- Accident Sampling are compliance with 10 CFR 50.34 (f)(2)(viii)
  - Radiation Exposures at Site Boundary :
    - Direct Radiation : negligible
    - Dose due to Airborne Radioactivity : given in Chapter 11

➢Radiation Zones for Shielding Design and Radiation Control

Zone	Maximum Dose Rate	Description
I	0.25 mrem/h	Controlled area, unlimited occupancy
II	1 mrem/h	Restricted area, limited occupancy
III	2.5 mrem/h	Restricted area, limited occupancy
IV	15 mrem/h	Restricted area, limited occupancy
V	100 mrem/h	Restricted area, limited occupancy
VI	1 rem/h	High radiation sources. Restricted area, limited occupancy for very short periods. Access controlled as stated in the Technical Specifications.
VII	10 rem/h	Same as Zone VI above
VIII	100 rem/h	Same as Zone VI above
IX	500 rad/h	Same as Zone VI above
X	> 500 rad/h	Very high radiation sources. Restricted area, very limited occupancy for the shortest periods. Access controlled as stated in the Technical Specifications.

3. Summary

- *Policy Considerations, Design Considerations, Radiation Sources and Radiation Protection Design Features to ensure that Occupational Exposures are ALARA are described in chapter 12.*
- *Radiation Protection Design complies with 10 CFR 20 and 10 CFR 50 for Normal Operation/Shutdown and Post-accident Actions*
- *Dose Assessment for Occupational Exposures and post-accident actions meet NRC's general requirements and/or 10 CFR 50.34*

US-APWR

Design Certification Application Orientation

Detail of FSAR

Tier2: Chapter 13

January 15,16, 2008

Mitsubishi Heavy Industries, Ltd.

Presenter

Atsushi Kumaki

Engineering Manager
APWR Promoting Department
Nuclear Energy Systems Headquarters
Mitsubishi Heavy Industries, LTD.

Contents

1. Overview of Chapter
   - ✓ Title of Chapter
   - ✓ Scope of Chapter
2. Topics of Section
3. Summary

1. Overview of Chapter

- Title of Chapter

Chapter 13: CONDUCT OF OPERATION

- Scope of Chapter

This chapter provide information relating to the preparations and plans for the design, construction, and operation

2. Topics of Section

- **13.1 Organizational Structure of Applicant**
  - ✓ This section makes clear the COL Applicant's responsibility to describe;
    - management and technical support organization,
    - operating organization, and
    - Qualification of Nuclear Power Plant Personnel

2. Topics of Section

- **13.2 Training**
  - ✓ The development of training programs is the responsibility of the COL Applicant

2. Topics of Section

- **13.3 Emergency Planning**
  - ✓ This section provides design features necessary for emergency planning, e.g.;
    - technical support center (TSC),
    - emergency operations facility (EOF),
    - emergency response data system (ERDS),
    - data communication system,
    - safety parameter display system, and
    - post accident monitoring system

2. Topics of Section

- **13.4 Operational Program Implementation**
  - ✓ The development of operational program implementation is the responsibility of the COL Applicant

2. Topics of Section

- **13.5 Plant Procedures**
  - ✓ This section makes clear the COL Applicant's responsibility to develop;
    - administrative procedures, and
    - operation and maintenance procedures

2. Topics of Section

- **13.6 Security**
  - ✓ This section makes clear the Applicant's responsibility to develop;
    - security assessment,
    - plant overall security plan,
    - implementation schedule for the security program, and
    - proposed ITAAC for physical security hardware
  - ✓ A security safeguards report will identify vital areas and vital equipment and other physical protection information for US-APWR standard design

2. Topics of Section

- **13.7 Fitness for Duty**
  - ✓ The development of the fitness-for-duty program is the responsibility of the COL Applicant

3. Summary

- Chapter 13 provides information relating to the preparations and plans for the design, construction, and operation of the US-APWR plant.
- The purpose of Chapter 13 is to provide adequate assurance that the COL Applicant establishes and maintains a staff of adequate size and technical competence and that operating plans to protect the public health and safety.

US-APWR

Design Certification Application Orientation

Detail of FSAR

Tier2: Chapter 14

January 15, 16, 2008

Mitsubishi Heavy Industries, Ltd.

Presenter

Atsushi Kumaki

Engineering Manager
APWR Promoting Department
Nuclear Energy Systems Headquarters
Mitsubishi Heavy Industries, Ltd.

Contents

1. Overview of Chapter
   - ✓ Title of Chapter
   - ✓ Scope of Chapter
2. Chapter 14 Contents
3. Summary

1. Overview of Chapter

➢ **Title of Chapter**

Chapter 14: VERIFICATION PROGRAMS

➢ **Scope of Chapter**

This chapter consists of

1) Initial Test Program Part (14.1 & 14.2)
   (Administrative Control & Test Abstracts)
2) ITAAC Screening Part (14.3)
3) Supplemental Information (Appendix 14A)

1. Scope of Chapters and Interfaces

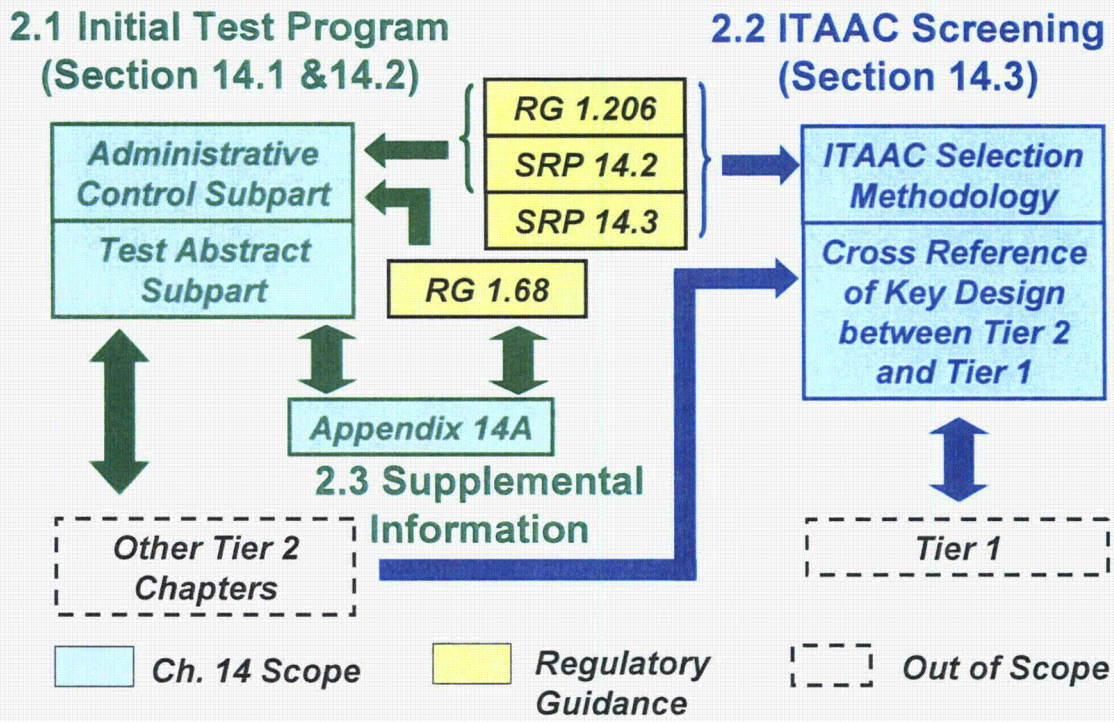

2. Tier 2 Chapter 14 Contents
"Verification Programs"

2.1 Initial Test Program Part (14.1 & 14.2)

2.2 ITAAC Screening Part (14.3)

2.3 Supplemental Information (Appendix 14A)

2.1 Initial Test Program Part

Section 14.2 consists of

- **Administrative Control Subpart**

  This part addresses general commitment of the administrative control.

  Site-specific administrative control is described in the COLA phase.

- **Test Abstract Subpart**

  Most of the test abstracts is addressed in the DCD. Some of the site-specific test (e.g. personnel monitors and radiation survey instruments) will be added in the COLA.

2.1 Contents Example

- **Test abstracts are developed based on the MHI's initial test experience and U.S. regulatory guidance (including the past FSAR).**

14.2.12.1.5 Pressurizer Relief Tank Preoperational Test

A. Objectives

1. To demonstrate that design pressurizer relief tank spray flow can be
2. To demonstrate the filling and draining operation of ....

B. Prerequisites

1. Required construction testing is complete
2. The containment vessel reactor cavity drain tank ..... is available to the drain.....
3. .....

C. Test Methods

1. With reactor pressure ....., the required spray flow is pumped to the pressurizer relief tank.
2. While [illegible] ....., the nitrogen pressurization system operation is observed.
3. ....

D. Acceptance Criteria

1. The required spray flow is obtained as designed (see Subsection 5.4.11)
2. The pressurizer system .....

Test Abstract Example

2.2 ITAAC Screening Part

Section 14.3 consists of

- **ITAAC Selection Methodology**

  All selection methodology (including for Emergency Planning ITAAC and Physical Security ITAAC) is provided in the DCD.

- **Cross Reference Table between Tier 2 Key Design Features and Tier 1 Description.**

  The significant parameters and key design features in Tier 2 are listed with the applicable Tier 1 description and section numbers.

2.2 Contents Example

- **The cross-connection clearly shows how and where most significant key design are addressed in Tier 1 and Tier 2.**

Tier 1 Ref.	Key Design Features	Tier 2 Location
Subsection 2.7.1.2.1	The valves close within the following [illegible] after receipt of an actuation signal. The main steam isolation valves (MSIVs) close within 5 seconds.	Subsection 10.3.2.3.4
Table 2.7.1.2-4	The sum of the rated capacities of the MSSVs [illegible] 11,210,000 lb/hr....	Subsection 10.3.2 Table 10.3.2-2
Table 2.7.1.2-4	The flow restrictor within the SG.....	Subsection 15.1.5.2

Cross Reference Example

2.3 Supplemental Information

➢ Comparison Table with RG 1.68

- ✓ Each item of the RG 1.68 Appendix A is listed with applicable test abstracts.
- ✓ Exceptions from the regulatory guidance are clearly specified with the justification.

2.3 Contents Example

Comparison Table Example in Appendix 14A

- ✓ This cross-connection clearly shows the conformance with the regulatory guide.

RG 1.68 Appendix A	Section Number	Typical Test
1.h.(7)	14.2.12.1.57 14.2.12.1.59	Safety Injection Accumulator Testing Refueling Water Storage System Preoperational Test
1.h.(8)		Not applicable This system does not have an ESF function in the US-APWR.
.....	.....	.....

Comparison Table Example

3. Summary

- Chapter 14 contents completely conform to RG 1.206.
- Cross-connection between RG 1.68 and individual test abstracts are available for the reviewer's convenience.
- These contents provide sufficient information for NRC's review.

US-APWR

Design Certification Application Orientation

Detail of FSAR
Tier 2: Chapter 15

January 15,16, 2008
Mitsubishi Heavy Industries, Ltd.

Presenter

Keith Paulson
Senior Technical Manager and Licensing Manager
Mitsubishi Nuclear Energy Systems, Inc.

Contents

1. Overview of Chapter 15
2. Design Features Related to Transient and Accident Analyses
3. Selection of Design Basis Events and Acceptance Criteria
4. Event Categorization and Computer Codes Used
5. Analysis Methods
6. Analysis Results
7. Summary

1. Overview of Chapter 15

- Title of Chapter

Chapter 15: Transient and Accident Analyses

- Scope of Chapter

Transient and Accident analyses reported in the Design Control Document (DCD) include eight (8) categories of events to comply with the Regulatory Guide (RG) 1.206 and Standard Review Plan (SRP) NUREG-0800

2. Design Features Related to Safety Analysis

- *US-APWR Plant Parameter Summary*
  - ✓ Larger core thermal output with improved efficiency
  - ✓ Enhanced thermal margins due to the lower average linear heat rate

Features	US-APWR	US Current 4 Loop Plant
Core thermal output (MWt)	4,451	3,565
Number of loops, SGs and RCPs	4	4
Number of fuel assemblies	257	193
Fuel rod lattice	17 x 17	17 x 17
Active fuel length (ft)	14	12
Average linear heat rate (kW/ft)	4.6	5.7
Reactor coolant pump type	Centrifugal	Centrifugal
Steam generator type	U-Tube	U-Tube

2. Design Features Related to Safety Analysis *(Cont'd)*

- *US-APWR Design Features*
  - ✓ Very similar to current PWRs in the US
  - ✓ Design Features and the Effects on Safety Analyses

Features	Effects on Safety Analyses
Neutron Reflector	Neutron Reflector is explicitly modeled in LOCA analyses Negligible change in neutron kinetics
Simplified core lower plenum	Core inlet mixing among loops approximately the same
Pressurizer	Larger steam space moderates pressure transients
Steam generator	Smaller U-tube diameter improves transient performance in case of SGTR*1
ECCS and EFWS*2	4 independent trains with one pump per train
Diverse actuation system	Satisfies design requirements to cope with ATWS*3
Advanced Accumulator	Characteristics of Advanced Accumulator is modeled in LOCA analyses Not expected to actuate during Non-LOCA events

*1 SGTR —Steam Generator Tube Rupture; *2 EFWS —Emergency Feedwater System

*3 ATWS —Anticipated Transients Without Scram

3. Selection of Design Basis Events and Acceptance Criteria

- Design Basis Events
  - ✓ *Basic design of the US-APWR is the same as the current PWRs in the U.S. from the viewpoint of*
    - primary and secondary system configurations
    - thermal hydraulic characteristics and main plant parameters
    - fuel properties
    - core kinetics
    - reactor control and protection system functional design
  - ✓ *The US-APWR design does not introduce any new initiating events for safety evaluation.*
  - ✓ *All transients and accidents in NRC Standard Review Plan (SRP) Chapter 15, applicable to PWRs, are included*
  - ✓ *8 categories based on the causes of transients consistent with the SRP*

- Acceptance criteria
  - ✓ *SRP Acceptance Criteria are applied for US-APWR analyses*

4. Event Categorization and Computer Codes Used

- *SRP Chapter 15 Events, Classification, Computer Codes*

Section	Events	Category	Computer Code(s) Utilized
15.1.1	Decrease in feedwater temperature	AOO	MARVEL-M
15.1.2	Increase in feedwater flow	AOO	MARVEL-M
15.1.3	Increase in steam flow	AOO	MARVEL-M
15.1.4	Inadvertent opening of a steam generator relief or safety valve	AOO	MARVEL-M, ANC, VIPRE-01M
15.1.5	Steam system piping failures – Minor / Major	AOO / PA	MARVEL-M, ANC, VIPRE-01M
15.2.1	Loss of external electrical load	AOO	MARVEL-M
15.2.2	Turbine trip	AOO	Bounded by loss of load
15.2.3	Loss of condenser vacuum and other events resulting in turbine trip	AOO	Bounded by loss of load
15.2.4	Inadvertent closure of main steam isolation valves	AOO	Bounded by loss of load
15.2.5	Steam pressure regulator malfunction or failure that results in decreasing steam flow	AOO	No steam pressure regulators in the US-APWR whose malfunction or failure could result in a steam flow transient.
15.2.6	Loss of non-emergency AC power to the station auxiliaries	AOO	MARVEL-M
15.2.7	Loss of normal feedwater flow	AOO	MARVEL-M
15.2.8	Feedwater system pipe break – Minor / Major	AOO / PA	MARVEL-M

4. Event Categorization and Computer Codes Used *(Cont'd)*

➢ *SRP Chapter 15 Events, Classification, Computer Codes*

Section	Events	Category	Computer Code(s) Utilized
15.3.1.1	Partial loss of forced reactor coolant flow	AOO	MARVEL-M, VIPRE-01M
15.3.1.2	Complete loss of forced reactor coolant flow	AOO	MARVEL-M, VIPRE-01M
15.3.2	Flow controller malfunctions (not applicable to US-APWR)	-	N/A — BWR Event
15.3.3	Reactor coolant pump rotor seizure	PA	MARVEL-M, VIPRE-01M
15.3.4	Reactor coolant pump shaft break	PA	Bounded by rotor seizure
15.4.1	Uncontrolled RCCA bank withdrawal from a subcritical or low power startup condition	AOO	TWINKLE-M, VIPRE-01M, MARVEL-M
15.4.2	Uncontrolled RCCA bank withdrawal at power	AOO	MARVEL-M
15.4.3	RCCA misalignment	AOO / PA	MARVEL-M, VIPRE-01M
15.4.4	Startup of an inactive reactor coolant pump at an incorrect temperature	AOO	N-1 loop operation not allowed
15.4.5	Malfunction / Failure of flow controller in BWR recirculation loop	-	N/A — BWR Event
15.4.6	CVCS malfunction that results in a decrease in boron concentration in the reactor coolant	AOO	Evaluation without computer code
15.4.7	Inadvertent loading and operation with fuel assembly in improper location	PA	ANC
15.4.8	Spectrum of RCCA ejection accidents	PA	TWINKLE-M, VIPRE-01M, MARVEL-M

4. Event Categorization and Computer Codes Used *(Cont'd)*

➢ *SRP Chapter 15 Events, Classification, Computer Codes*

Section	Event	Category	Computer Code(s) Utilized
15.5.1	Inadvertent actuation of the emergency core cooling system during power operation	AOO	N/A - shut off head of the SI pump is below nominal operating pressure
15.5.2	CVCS malfunction that increases reactor coolant inventory	AOO	MARVEL-M
15.6.1	Inadvertent opening of a pressure relief valve	AOO	MARVEL-M
15.6.2	Radiological Consequences of the Failure of Small Lines Carrying Primary Coolant Outside Containment	AOO	RADTRAD
15.6.3	Steam generator tube rupture	PA	MARVEL-M
15.6.4	Radiological Consequences of Main Steam Line Failure Outside Containment (BWR)	-	N/A— BWR Event
15.6.5	Loss-of-Coolant-Accidents Resulting from Spectrum of Postulated Piping Breaks Within the Reactor Coolant Pressure Boundary	PA	WCOBRA/TRAC, HOTSPOT, M-RELAP5
15.7	Radioactive Release from a Subsystem or Component	AOO/PA	RADTRAD
15.8	Anticipated Transient Without Scram	N/A	N/A

5. Analysis Methods

- LOCA
  - ✓ Large Break LOCA
    - WCOBRA/TRAC code with the ASTRUM methodology is implemented
    - Applicability of this methodology for US-APWR is submitted in Topical Report entitled "Large Break LOCA Code Applicability Report for US-APWR" *(MUAP-07011-P(R0), July 2007)* and is under review
  - ✓ Small Break LOCA
    - M-RELAP5 code which incorporates Appendix-K requirements is used
    - This methodology is submitted in Topical Report entitled "Small Break LOCA Methodology for US-APWR" *(MUAP-07013-P(R0), July 2007)* and is under review
    - Plant Sensitivity analyses are provided in Technical Report *(MUAP-07025-P(R0), December 2007)*

5. Analysis Methods *(Cont'd)*

- Non-LOCA
  - ✓ MARVEL-M code and TWINKLE-M code are applied
  - ✓ TWINKLE-M 3-D neutron kinetics methodology is used for the Rod Ejection Accident analysis from HZP condition
  - ✓ Applicability of the methodology for US-APWR is submitted in Topical Report entitled "Non-LOCA Methodology", (MUAP-07010-P (R0), July 2007) and is under review

5. Analysis Methods *(Cont'd)*

- Radiological Consequence Analyses
  - ✓ Alternative source term is used
  - ✓ Methodologies which consider decay, removal and transport of radioactivity based on plant design are applied and equivalent to current U.S. PWR
  - ✓ RADTRAD code, approved by NRC, is used

6. Analysis Results

1. **The transient and accident response of the US-APWR is similar to that of current PWRs in the US**
2. **All analysis results satisfy the SRP Acceptance Criteria**
3. **Large thermal margin due to the lower average linear heat rate greatly enhances the safety margins**
   - No DNB for AOOs
   - Minimal fuel failure and radiological consequences for PAs
   - No PCMI fuel failure for Rod Ejection Accident
4. **Enhanced ECCS performance**
   - Large PCT margin for LOCA
   - Small increase in cladding temperature due to loop seal formation.

6. Analysis Results *(Cont'd)*

- **AOOs (Anticipated Operational Occurrences)**
  - ✓ Minimum DNBR remains above the 95/95 limit and no fuel failures are predicted
  - ✓ RCS pressure and main steam system pressure remain well below 110% of respective system design pressures
  - ✓ All AOOs do not generate any other fault that may lead to a postulated accident
- **PAs (Postulated Accidents)**
  - ✓ Minimum DNBR remains above the 95/95 limit for most PAs. If the minimum DNBR falls below the limit, the acceptance criteria in 10 CFR 50.46 are satisfied
  - ✓ RCS pressure and the main steam system pressure remain below acceptable design limits.
  - ✓ All PAs do not cause any consequential loss of required functions of systems needed to cope with the fault.
  - ✓ Resultant doses are well within the guideline values specified in 10 CFR 50.34

6. Analysis Results *(Cont'd)*

- **LOCA**
  - ✓ Statistical methodology of large break LOCA demonstrates that acceptance criteria of 10 CFR 50.46 are satisfied

    PCT(95/95) = 1763 ^{o}F < 2200 ^{o}F
  - ✓ Conservative analysis of small break LOCA, which is based on Appendix-K, demonstrates that acceptance criteria of 10 CFR 50.46 are satisfied

    PCT = 1297 ^{o}F < 2200 ^{o}F
  - ✓ Switchover to simultaneous RV and hot leg injection mode at four hours after a LOCA prevents boric acid precipitation in the core, then post-LOCA long term cooling is assured

6. Analysis Results *(Cont'd)*

- **Reactivity Initiated Accident (RIA) Specific Criteria (SRP 4.2 Appendix B and SRP 15.4.8)**
  - ✓ The average fuel pellet enthalpy at the hot spot remains significantly below 230 cal/g
  - ✓ 3-D methodology is applied to analyze Rod Ejection Accident from HZP condition. Prompt fuel enthalpy rise is well below new threshold for cladding failure.

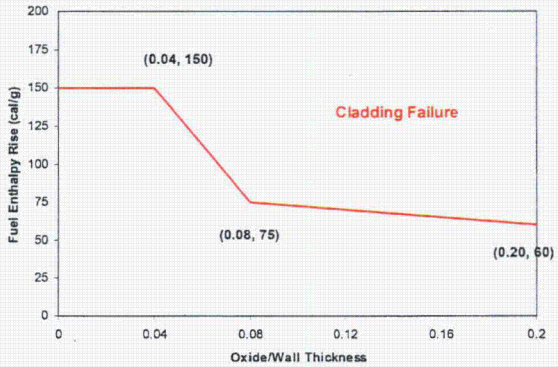

6. Analysis Results *(Cont'd)*

- **RADIOLOGICAL CONSEQUENCE ANALYSES**
  - ✓ The exclusion area boundary (EAB) and the outer boundary of low population zone (LPZ) doses are shown to meet the 10 CFR 50.34 dose guidelines

    The dose results (LOCA) are 13rem < 25rem at EAB, 13rem < 25rem at LPZ

  - ✓ The dose for the MCR personnel is shown to meet the dose criteria given in GDC 19

    The dose results (LOCA) are 4.5rem < 5rem in MCR

7. Summary

1. US-APWR DCD FSAR Chapter 15 format and content comply with RG 1.206 and satisfy the SRP requirements
2. All results of transient and accident analyses meet the acceptance criteria
3. Methodologies and codes for US-APWR are discussed in Topical Reports for NRC review
4. Supplemental information is provided in Technical Report to support DCD review

US-APWR

Design Certification Application Orientation

Detail of FSAR

Tier2: Chapter 16

January 15,16, 2008

Mitsubishi Heavy Industries, Ltd.

Presenter

Katsunori Kawai

Engineering Manager

APWR Promoting Department

Nuclear Energy Systems Headquarters

Mitsubishi Heavy Industries, Ltd.

Contents

1. Overview of Chapter
   - Title of Chapter
   - Scope of Chapter

2. Features of Technical Specifications (TS)

1. Overview of Chapter

- Title of Chapter

Chapter 16: Technical Specifications

- Scope of Chapter
  - This chapter includes the following categories of information as required by 10 CFR 50.36 and 10 CFR 50.36a
  - Safety limits, limiting safety system settings, LCOs, surveillance requirements, design features and administrative controls

2. Features of TS

- Features of US-APWR safety system design
  - Design concept is based on current PWRs in the USA
  - Four-train safety systems are one of characteristic design features
- Features of US-APWR Technical Specifications
  - Basically follow the Standard TS* (STS)
  - Maximize the benefits of on-line maintenance (OLM)
  - Apply Risk-Managed Technical Specifications

* NUREG-1431, Rev.03, "Standard Technical Specifications Westinghouse Plants"

2. Features of TS (cont'd)

2.1 Utilization of STS

- US-APWR Technical Specifications are almost same as the STS of NUREG-1431
- US-APWR Technical Specifications differ from STS only as necessary to reflect technical differences between conventional US- PWRs design and US-APWR design
- Justification for deviations between STS and US-APWR TS is described in technical report *

*: Justification for Deviations between NUREG-1431 and US－APWR Technical Specifications (Dec. 2007)

2. Features of TS (cont'd)

2.2 Safety Benefits of Four-train systems

- Enhanced redundancy (50% x 4)
  - ✓Capability beyond single failure criterion
- Maximize the benefits of on-line maintenance
  - ✓Establish LCO requiring three trains operable
  - ✓Establish completion time when one of the three required trains inoperable

2. Features of TS (cont'd)

2.3 Main deviations between STS (NUREG-1431) and US-APWR TS

➢ **Characteristic design features**

- Four train safety systems
  - e.g. : LCO is Three of four SIS trains shall be OPERABLE
- Gas turbine generators
  - e.g. Fuel oil testing program
- Digital Platform
  - e.g. Actuation logic test interval increased

➢ **Surveillance Interval**

- 24 month refueling cycle

2. Features of TS (cont'd)

2.4 Adoption of Risk-Managed Technical Specifications (RMTS)

- Risk-Informed Completion Times (CTs)
  - A front-stop CT and Commitment to Configuration Risk Management Program (CRMP)
  - 30-day limit as a back-stop CT
  - Reference to Risk-Managed Technical Specifications Initiative 4b*

*: NEI 06-09 (Revision 0) "Risk-Informed Technical Specifications Initiative 4b Risk- Managed Technical Specifications (RMTS) Guidelines," November 2006.

2. Features of TS (cont'd)

Coming works for RMTS to be completed

- Establishment of the station procedure of the Configuration Risk Management Program (CRMP)
- Training of responsible personnel
- Preparation of a PRA model to meet the technical adequacy requirement of NEI 06-09
- Preparation of an appropriate CRM tool

2. Features of TS (cont'd)

US-APWR

Other risk-informed initiatives will be considered

- **Initiative 5b: Relocation of all SR frequency requirements out of TS**
- **Initiative 1: Actions end states modification**
  - ✓ This initiative would permit, for some system, entry into hot shutdown rather than cold shut down to repair equipment
- **Initiative 7: Non-TS support system impact on TS operability determinations**
  - ✓ This initiative would permit a risk-informed delay time before entering LCO actions for Inoperability due to loss of support function provided by equipment outside of technical specifications

2. Features of TS (cont'd)

US-APWR

Plans to submit at each stage in applying RMTS

Stage	*Tech. Spec. (Incl. RMTS)*	*Associated Documents*
DC	*Design-specific*	*DCD Chapter 19*
COLA	*Plant-specific (All CTs established)*	*Plant-specific PRA results consistent with FSAR Chapter 19 to support RMTS*
Prior to fuel load	*Plant-specific (All CTs established)*	● *Technical report describing PRA technical adequacy, CRM tools, CRMP, Organization, Training of personnel, etc** ● *Implementation manual* ● *All required ITAAC*

* : In accordance with NEI 06-09

US-APWR

Design Certification Application Orientation

Detail of FSAR

Tier2: Chapter 17

January 15,16, 2008

Mitsubishi Heavy Industries, Ltd.

Presenter

Naoki Miyakoshi

General Manager

Nuclear Energy Systems Quality and Safety Management Department

Nuclear Energy Systems Headquarters

Mitsubishi Heavy Industries, LTD.

Contents

1. Overview of Chapter
   - ✓ Title of Chapter
   - ✓ Scope of Chapter
2. Chapter 17 Contents
3. Summry

1. Overview of Chapter

➢ Title of Chapter

Chapter 17: QUALITY ASSURANCE AND RELIABILITY ASSURANCE

➢ Scope of Chapter

- Quality Assurance Program performed during the design certification phase
- Design Reliability Assurance Program (Phase I D-RAP; design certification phase)

1. Overview of Chapter (cont'd)

➢ Scope of Chapter (cont'd)

17.1	Quality Assurance During Certification Phase	DC Phase
17.2	Quality Assurance During the Construction and Operation Phase	(COL)
17.3	Quality Assurance Program Description	DC Phase
17.4	Design Reliability Assurance Program	DC Phase
17.5	Quality Assurance Program Guidance	DC Phase
17.6	Description of the Applicant's Program for Implementation of 10CFR 50.65, the Maintenance Rule	(COL)

2. Chapter 17 Contents

➢ Quality Assurance Program

- ✓ QAP meets requirements of 10CFR Part 50, Appendix B, 10CFR Part21 and 10CFR Part52.
- ✓ QAP is based on the requirements of ASME NQA-1-1994 "Quality Assurance Requirements for Nuclear Facilities Applications," Parts I and II.
- ✓ QAP Description for DC phase has been prepared on the basis of the NRC approved QAP template (NEI 06-14A Rev.4)

2. Chapter 17 Contents (cont'd)

➢ Quality Assurance Program

✧ Conformity to 10 CFR Part 50 Appendix B

	QA Requirements	Applicable status	Remarks (MHI QAP on US-APWR)
1.	Organization	✓	
2.	QA Program	✓	
3.	Design Control	✓	
4.	Procurement Document Control	✓	
5.	Instructions, Procedures and Drawings	✓	
6.	Document Control	✓	
7.	Control of Purchased Materials, Items and Services	✓	- At DC stage this applies to services such as analysis & test
8.	Identification and Control of Items and Materials	-	Not Applicable (NUREG-0800 17.5)
9.	Control of Special Processes	-	
10.	Inspection	✓	- At DC stage this applies to inspections for test facilities
11.	Test Control	✓	- At DC stage this applies to qualification tests
12.	Control of Measuring and Test Equipment	✓	
13.	Handling, Storage and Shipping	-	Not Applicable (NUREG-0800 17.5)
14.	Inspection, Test and Operating status	-	
15.	Control of Nonconforming Items	✓	
16.	Corrective Action	✓	
17.	QA Records	✓	✓: Comply - : N/A
18.	Audit	✓	

2. Chapter 17 Contents (cont'd)

➢ Reliability Assurance Program

✓ **The scope of DCD chapter 17 is Phase I D-RAP.**

~~Phase I : Design Certification phase~~

Phase II : Site-specific phase

Phase III : Last phase of D-RAP (procurement, fabrication, construction preoperational testing)

✓ **US-APWR D-RAP identifies risk-significant SSCs and provides risk insights and reliability assumptions.**

2. Chapter 17 Contents (cont'd)

- Reliability Assurance Program (cont'd)
  - Responsibility (Phase I D-RAP)
    - ✓ **General Manager, APWR project:**
      - Establishment of US-APWR D-RAP program
    - ✓ **General Manager, Reactor and Plant Safety:**
      - Use of the PRA results and risk insights for the Expert Panel
      - Conduct and coordination of the Expert Panel
    - ✓ **General Manager, QA:**
      - Assuring proper implementation of QA program (Organization, design control, procedure and instruction, records, corrective actions, audit)

2. Chapter 17 Contents (cont'd)

- List of risk-significant SSCs
  - ✓ **The risk and reliability organization is responsible to provide the RAP related inputs in the design process.**
  - ✓ **List of risk-significant SSCs is initially based on the result of PRA and Expert Panel.**
  - ✓ **The list and changes shall be approved by Expert Panel.**
  - ✓ **List of risk-significant SSCs and its key assumptions shall be maintained by the risk and reliability organization.**

3. Summary

MHI established QAPD for Design Certification and carried out design activities in accordance with the QAPD. MHI submitted the QAPD as a topical report to contribute for the NRC review.

- Topical Report

  "Quality Assurance Program (QAP) Description For Design Certification of the US-APWR (PQD-HD-19005 Rev.1)"

MHI established D-RAP (phase 1)program and prepared a list of risk-significant SSCs.

US-APWR

Design Certification Application Orientation

Detail of FSAR

Tier2: Chapter 19

January 15,16, 2008

Mitsubishi Heavy Industries, Ltd.

Presenter

Katsuya Kuroiwa

Engineering Manager

Reactor Safety Engineering Department

Nuclear Energy Systems Headquarters

Mitsubishi Heavy Industries, Ltd.

Contents

1. Overview of Chapter
   - Title of Chapter
   - Scope of Chapter
2. Probabilistic Risk Assessment
3. Severe Accident Evaluation
4. Summary

1. Overview of Chapter

- Title of Chapter

Chapter 19: PROBABILISTIC RISK ASSESSMENT AND SEVERE ACCIDENT EVALUATION

- Scope of Chapter
  - Probabilistic Risk Assessment (PRA) results and insights including internal and external events during full-power operations and during low power and shutdown operations
  - Severe accident evaluations including an assessment of preventive and mitigation features, containment performance capability, accident management and severe accident mitigation design alternatives (SAMDA)

2. Probabilistic Risk Assessment

➢ Methods and Approach

Basic design concept of US-APWR is similar to current PWRs. Therefore, present guides and standards are applied.

✓Regulatory Guide 1.200 Rev.1

✓Standards endorsed by Regulatory Guide 1.200 Rev.1

- ASME RA-S-2002 and the addenda : ASME RA-Sa-2003, ASME RA-Sb-2005
- ANSI-ANS 58.21-2003

✓Areas where no formal standards exists, previous studies or guidance are used

2. Probabilistic Risk Assessment (cont'd)

➢ Special Design Features of US-APWR

Improved plant safety as compared to currently operating nuclear power plants

- **Higher redundancy: four train mechanical and electrical safety systems**
- **Simplicity: In-containment RWSP eliminates recirculation switchover**
- **Independent: Physical separation of four train safety systems**
- **Diversity: Alternative systems such as diverse actuation system, alternative AC power source**

etc.

2. Probabilistic Risk Assessment (cont'd)

➢ Level 1 Internal Events PRA at Power

- **Core Damage Frequency (CDF) : 1.2 x 10^{-6}/RY**

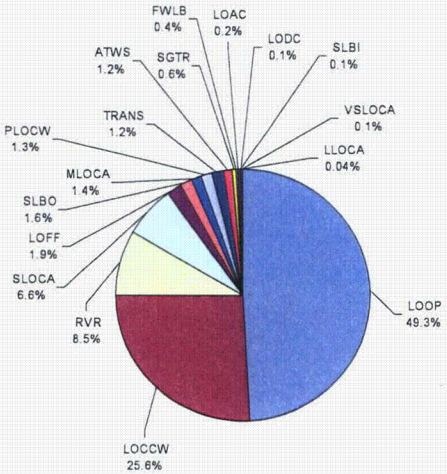

Core Damage Frequency Contribution

LLOCA	Large Pipe Break LOCA
MLOCA	Medium Pipe Break LOCA
SLOCA	Small Pipe Break LOCA
VSLOCA	Very Small Pipe Break LOCA
SGTR	Steam Generator Tube Rupture
RVR	Reactor Vessel Rupture
SLBO	Steam Line Break/Leak (Downstream MSIV : Turbine side)
SLBI	Steam Line Break/Leak (Upstream MSIV : CV side)
FWLB	Feed-water Line Break
TRANS	General Transient
LOFF	Loss of Feed-water Flow
LOCCW	Loss of Component Cooling Water
PLOCW	Partial Loss of Component Cooling Water
LOOP	Loss of Offsite Power
LOAC	Loss of Vital ac Bus
LODC	Loss of Vital DC Bus

2. Probabilistic Risk Assessment (cont'd)

➢ Level 2 Internal Events PRA at Power

- **Large Release Frequency (LRF) : 1.0 x 10^{-7}/RY**

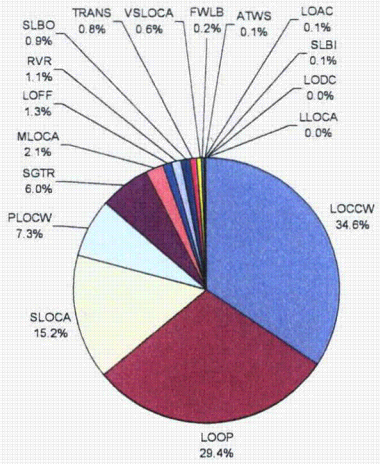

Large Release Frequency Contribution

LLOCA	Large Pipe Break LOCA
MLOCA	Medium Pipe Break LOCA
SLOCA	Small Pipe Break LOCA
VSLOCA	Very Small Pipe Break LOCA
SGTR	Steam Generator Tube Rupture
RVR	Reactor Vessel Rupture
SLBO	Steam Line Break/Leak (Downstream MSIV : Turbine side)
SLBI	Steam Line Break/Leak (Upstream MSIV : CV side)
FWLB	Feed-water Line Break
TRANS	General Transient
LOFF	Loss of Feed-water Flow
LOCCW	Loss of Component Cooling Water
PLOCW	Partial Loss of Component Cooling Water
LOOP	Loss of Offsite Power
LOAC	Loss of Vital ac Bus
LODC	Loss of Vital DC Bus

2. Probabilistic Risk Assessment (cont'd)

- Uncertainty Analysis for Internal Events PRA at Power

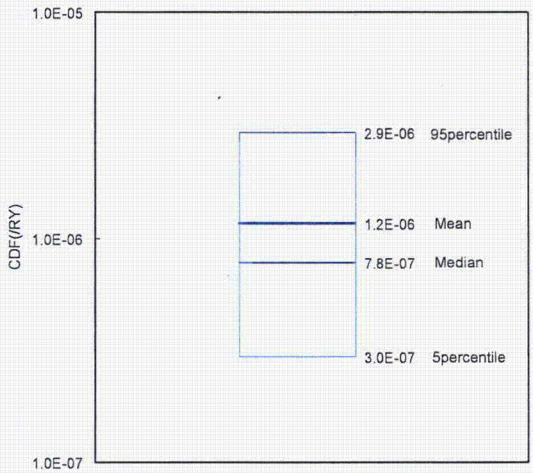

Core Damage Frequency

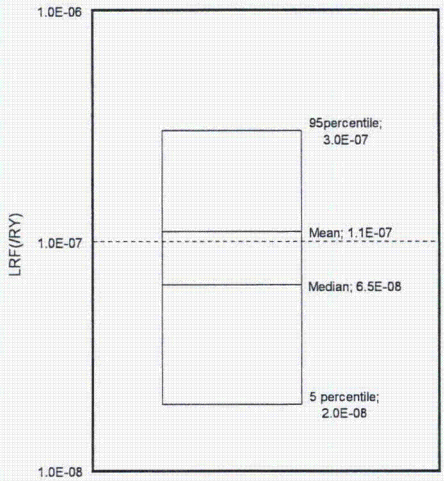

Large Release Frequency

2. Probabilistic Risk Assessment (cont'd)

- PRA Results of Other Events

	CDF	LRF
Seismic	(Seismic Margin Analysis) Plant HCLPF: 0.5g	
Internal Fire	1.7×10^{-6}/RY	2.0×10^{-7}/RY
Internal Flood	1.5×10^{-6}/RY	4.0×10^{-7}/RY
Other External	Site Specific	
Low Power and Shutdown	2.0×10^{-7}/RY	Assumed to be same with CDF

2. Probabilistic Risk Assessment (cont'd)

➢ Risk Significant Scenario and SSCs

- Station blackout with common cause failure of emergency gas turbine generators
  - ✧ Alternative AC power is effective to reduce the risk
- Loss of component cooling water by common cause failure of component cooling water pumps
  - ✧ Independent trains are effective to eliminate the risk of loss of cooling water by leak
- Fire in the switchyard area, causes loss of offsite power
  - ✧ Physical separation is effective to reduce the risk of fire in other areas
- Major flood in the divided area of the reactor building, causes partial loss of safety functions
  - ✧ Physical separation is effective to reduce the risk

2. Probabilistic Risk Assessment (cont'd)

➢ PRA Insights and Design Features

- **CDF and LRF are less than the NRC goals (less than 1E-4/year for CDF and less than 1E-6/year for LRF)**
- **Design features of US-APWR as shown below reduce the risk.**
  - ✧ **Four train safety systems**
  - ✧ **Independent four train electrical system with alternative AC power source**
  - ✧ **In-containment RWSP**
  - ✧ **Various severe accident prevention/mitigation features**

2. Probabilistic Risk Assessment (cont'd)

- Risk-informed Applications at Design Phase
  - PRA has been used to optimize the plant design with respect to safety.
  - Assumptions of important operating actions are identified for the accident management framework.
  - Risk significant SSCs are identified for the Reliability Assurance Program (RAP).
  - PRA insights are utilized to develop risk-managed technical specifications (RMTS).

3. Severe Accident Evaluation

- Prevention and Mitigation
  - Apply proven techniques for existing plants with improvements
- Analysis Approaches and Methods
  - Apply analysis approaches accepted by NRC for former DC applications
  - Employ MAAP4.0.6 for severe accident progression analysis, and other specific codes for specific phenomena

3. Severe Accident Evaluation (cont'd)

➢ Severe Accident Prevention Features

Anticipated Transient Without Scram	- Four train reactor protection system - Diverse actuation system
Mid-Loop Operation	- Automatic let-down isolation - Alternative core cooling
Station Blackout	- Four emergency gas turbine generators - Two alternative AC power sources
Fire Protection	- Physically separated four train safety systems
Intersystem Loss-of-Coolant Accident	- Up-rated RHRS piping
Others	- Feed and bleed with redundancy - Alternative component cooling, etc.

3. Severe Accident Evaluation (cont'd)

➢ Severe Accident Mitigation Features

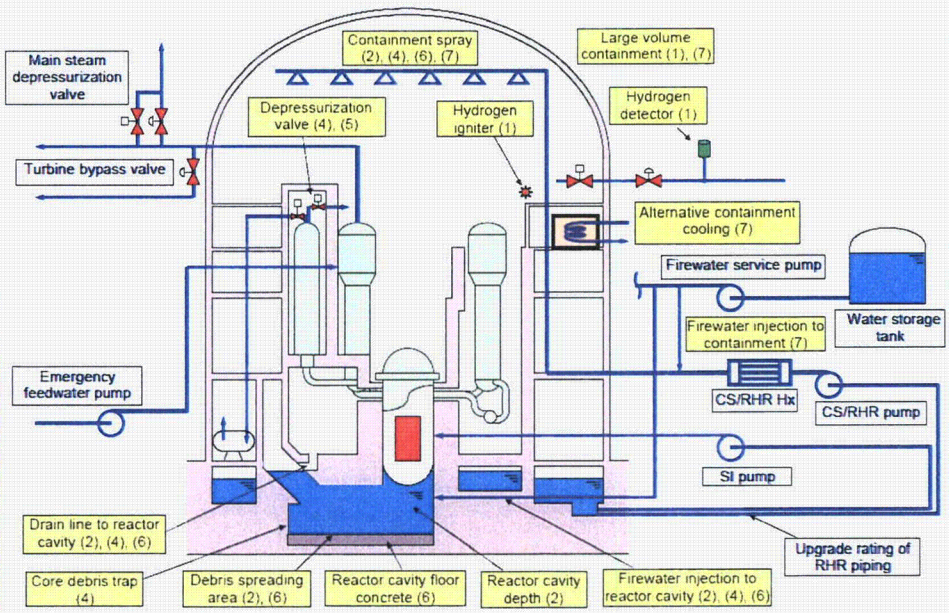

Addressed severe accident issues

(1) Hydrogen generation and control

(2) Core debris coolability

(3) Steam explosion

(4) HPME

(5) TISGTR

(6) MCCI

(7) Long-term containment overpressure

(8) Equipment survivability

3. Severe Accident Evaluation (cont'd)

- **Containment Performance (SECY-93-087)**
  - **Deterministic goal:**
    - **Containment integrity be maintained for approximately 24 hours following the onset of core damage for the more likely severe accident challenges**
  - **Results:**
    - **Containment integrity is maintained for more than 24 hours following the onset of core damage for most of the severe accident conditions**

3. Severe Accident Evaluation (cont'd)

- **Accident Management**
  - **Develop a framework includes:**
    - Approach
    - Operational and phenomenological conditions
    - Basis of the actions
  - **Four countermeasures and operating actions:**
    - To prevent core damage
    - To terminate the progress of core damage if it begins and to retain the core within the reactor vessel
    - To maintain containment integrity as long as possible
    - To minimize offsite release

3. Severe Accident Evaluation (cont'd)

➢ SAMDA

Meet the requirement of 10 CFR 50.34(f)(1)(I) to consider potential design improvements

- Approaches:
  - ✧ Guidance for regulatory analysis (NUREG/BR-0184 and NUREG/BR-0058)
  - ✧ Industry implementation guidance (NEI 05-01, Rev. A)
  - ✧ consistent with SECY-99-169
- Results:
  - ✧ Ten candidate SAMDAs are selected from 156 potential improvements
  - ✧ The benefit of each SAMDA is observed to be significantly less than the cost impact
- **No additional design alternatives are shown to be cost-beneficial in severe accident mitigation design**

4. Summary

- **Describe the design-specific PRA**
  - PRA results indicate the US-APWR design meets the NRC safety goals.
- **Describe design features for the prevention and mitigation of severe accidents**