ELECTRIC POWER RESEARCH INSTITUTE

Advanced FEA Evaluation of Growth of Postulated Circumferential PWSCC Flaws in Pressurizer Nozzle Dissimilar Metal Welds (MRP-216)

US NRC Workshop on LBB in PWSCC Systems
Rockville, Maryland
Thursday, January 10, 2008

Glenn White
John Broussard
Dominion Engineering, Inc.

Topics

- Objective and Approach
- Summary of Methodology
  - Plant Inputs
  - Welding Residual Stress
  - Crack Growth Modeling
  - Critical Crack Size Calculations
  - Leak Rate Modeling
- Analytical Results
- Conclusions

© 2008 Electric Power Research Institute, Inc. All rights reserved.

Background
Pressurizer Top & Bottom Head Nozzles

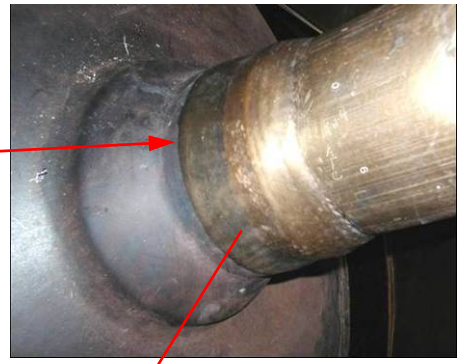

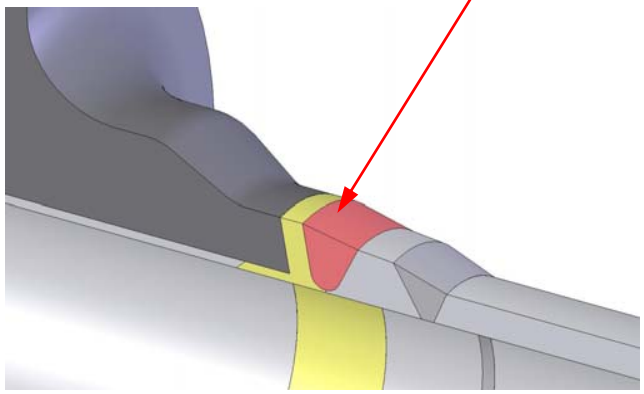

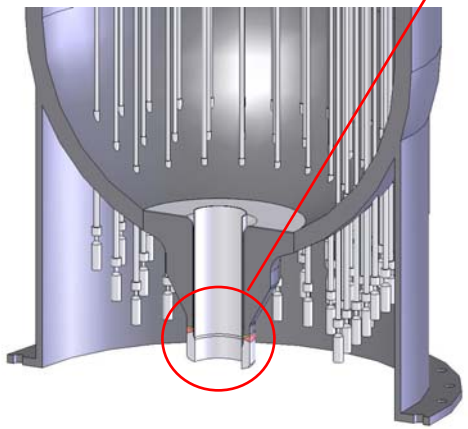

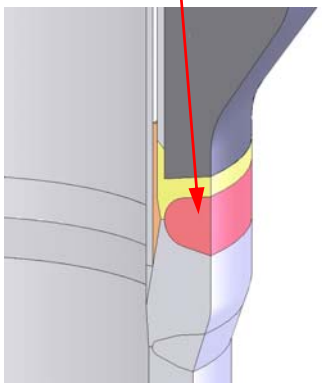

© 2008 Electric Power Research Institute, Inc. All rights reserved.

ELECTRIC POWER RESEARCH INSTITUTE

Background
Pressurizer Top & Bottom Head Nozzles (cont'd)

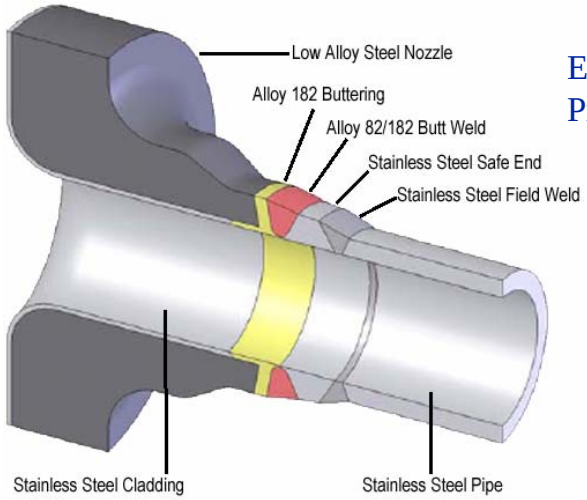

Example Westinghouse Pressurizer Safety/Relief Nozzle

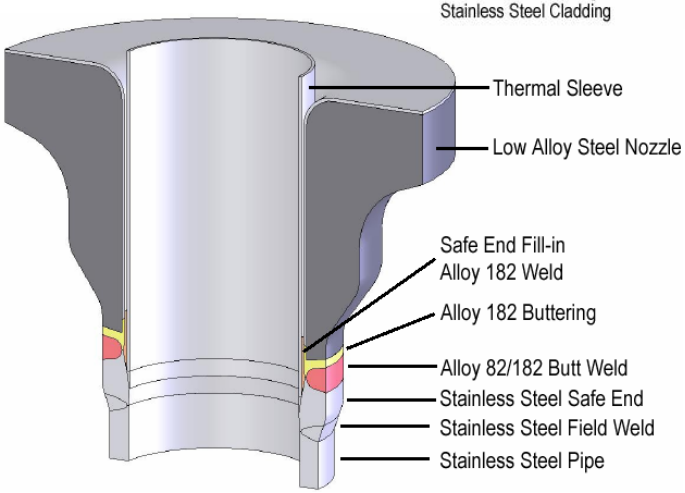

Example Westinghouse Pressurizer Surge Nozzle

Example CE Pressurizer Safety/Relief Nozzle

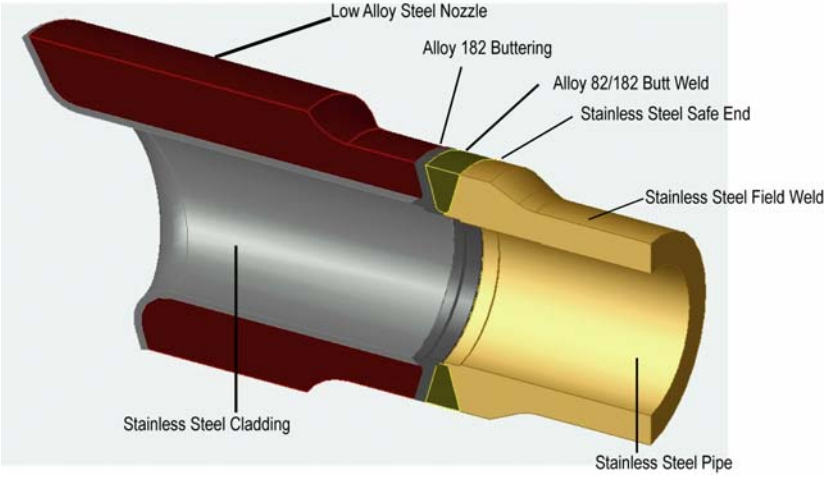

© 2008 Electric Power Research Institute, Inc. All rights reserved.

EPRI ELECTRIC POWER RESEARCH INSTITUTE

WC Inspection Results and Evaluation

Indication Characterization – October 2006

					2006 Indications				
Nozzle	Circumference (in)	Outside Diameter (in)	Thickness (in)	Inside Diameter (in)	OD Lemgth (inches)	Arc Length (2) (deg)	Maximum Depth (1) (%)	Depth (in)	Aspect Ratio (3)
Safety C	25.0	7.96	1.32	5.32	3.75	54	23	0.30	8
Relief	25.0	7.96	1.32	5.32	11.50	166	26	0.34	22
Surge	47.0	14.96	1.45	12.06	1.00	8	<10 (4)	---	---
	47.0	14.96	1.45	12.06	2.75	21	25	0.36	6
	47.0	14.96	1.45	12.06	5.00	38	31	0.45	9
				Surge Nozzle Totals =>	8.75	67			

Highlighted data represents values reported to the NRC by Wolf Creek. Other values are calculated by geometry.

(1) Average depth from 45 and 60 degree angle UT probes at maximum depth location.

(2) Calculated from OD length and circumference.

(3) Calculated from ID arc length and depth.

(4) Indication found but no measurable depth could be determined.

© 2008 Electric Power Research Institute, Inc. All rights reserved.

ELECTRIC POWER RESEARCH INSTITUTE

Project Objective

- To evaluate the viability of detection of leakage from a through wall flaw to preclude the potential for rupture of pressurizer nozzle DM welds, given the potential concern about growing circumferential stress corrosion cracks.
- This study is specific to the group of nine PWRs originally scheduled for performance demonstration initiative (PDI) inspection or mitigation during the spring 2008 outage season.
- Commitments were made for these nine PWRs to accelerate refueling outages or take mid-cycle outages. These plants have now resumed plans to perform PDI inspection or mitigation during the spring 2008 outage season given NRC's conclusion regarding its review of the industry evaluations and its confirmatory analyses.

© 2008 Electric Power Research Institute, Inc. All rights reserved.

Project Oversight

- Project Team
  - Dominion Engineering (DEI)
  - Quest Reliability – (FEACrack Software Developer)
- Expert Panel
  - Established to provide review, input, and oversight of the technical issues and approaches
  - Members well known in this industry were chosen
    - Ted Anderson, Quest Reliability, LLC
    - Warren Bamford, Westinghouse
    - Doug Killian, AREVA
    - Ken Yoon, AREVA
    - Pete Riccardella, Structural Integrity Associates
    - David Harris, Structural Integrity Associates
      - included specifically for his lack of recent involvement in Alloy 600 fracture mechanics applications to bring a fresh perspective
- Interacted with NRC Counterparts in ~7 NRC public meetings

© 2008 Electric Power Research Institute, Inc. All rights reserved.

Project Approach

Artificial Conservatism of Semi-Elliptical Crack Assumption

Semi-ellipse assumption over predicted extent of cracked material in this zone vs. the arbitrary shape methodology for the Wolf Creek nozzle benchmark run

Arbitrary Crack Shape at Initial Through Wall

Growth at each point on the crack front as a function of the stress intensity factor calculated at that point

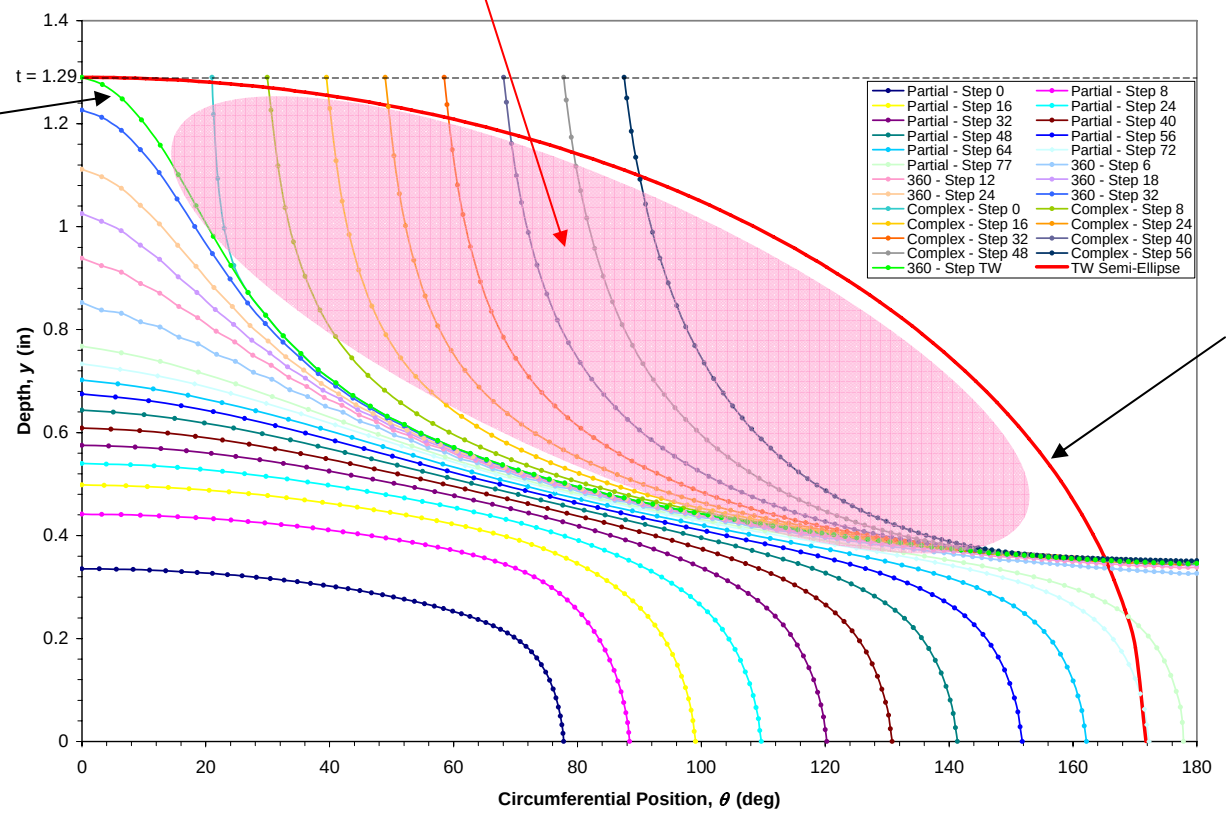

Semi-Ellipse Crack Shape at Initial Through Wall

© 2008 Electric Power Research Institute, Inc. All rights reserved.

ELECTRIC POWER RESEARCH INSTITUTE

Project Approach
Key Project Activities

- Software capability development within FEACrack
- Develop and execute an analysis parametric sensitivity case matrix
  - Develop and apply a sensitivity matrix of welding residual stress (WRS) profiles, including weld repairs
  - Crack growth calculations for custom crack shape
- Critical crack size calculations to define the end point for the crack growth calculation
- Leak rate calculations - PICEP and SQUIRT models
- Software verification and benchmarking
- Validation
- Expert panel input and review throughout the project

© 2008 Electric Power Research Institute, Inc. All rights reserved.

Plant Inputs
Plant Specific Geometries

- **Safety and Relief nozzles**
  - 35 safety and relief (S&R) nozzles (1 plant has only three S&R nozzles)
    - Represented by 5 geometric configurations
- **Spray nozzles**
  - 8 spray nozzles (1 examined by PDI process in 2005)
    - Represented by 4 geometric configurations
- **Surge nozzles**
  - 8 surge nozzles (1 already overlayed)
    - Represented by 2 geometric configurations

© 2008 Electric Power Research Institute, Inc. All rights reserved.

Plant Inputs
Plant Specific Geometries

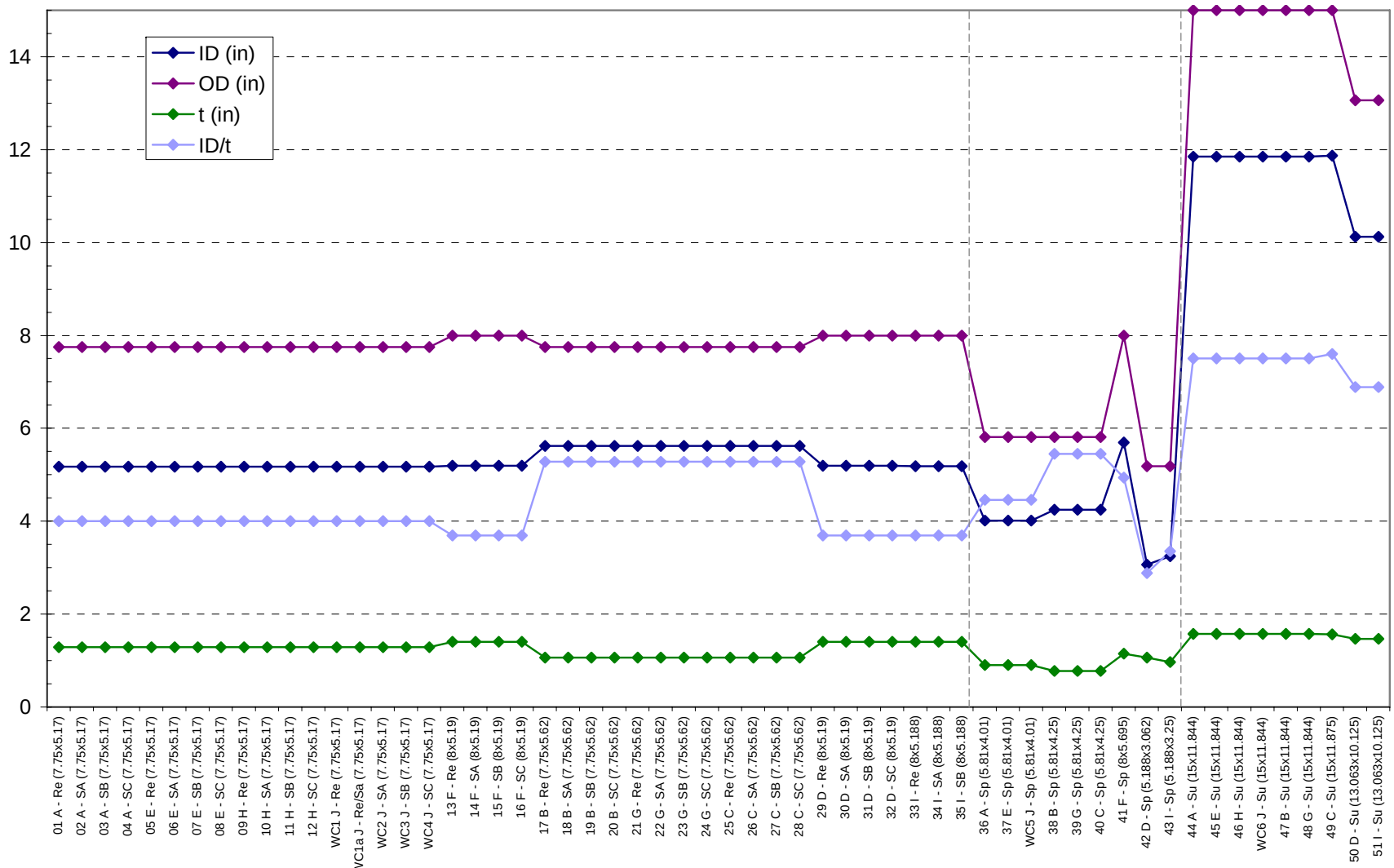

© 2008 Electric Power Research Institute, Inc. All rights reserved.

ELECTRIC POWER RESEARCH INSTITUTE

Plant Inputs

Weld Fabrication → Welding Residual Stresses

- Input obtained from design drawings & shop travelers

- Fabrication Steps affecting weld residual stress (WRS)
  - Fill-In Weld under thermal sleeve (Surge)
  - Fillet Welds (Safety/Relief)
  - Stainless steel field weld to pipe

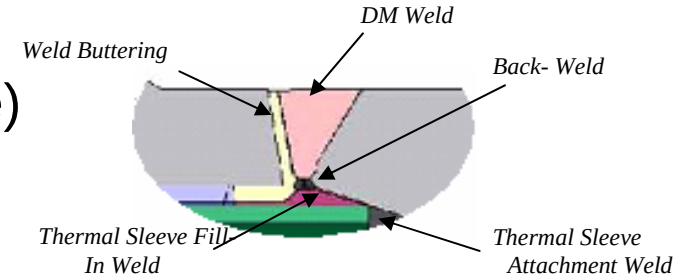

- Repairs
  - Deep ID Repairs

- Either thermal strain applied to simulate WRS profile or WRS FEA results directly input to crack growth model

© 2008 Electric Power Research Institute, Inc. All rights reserved.

Plant Inputs
Plant Specific Piping Loads

ASME Code Nominal Stress Loading for Pressure, Dead Weight, and Normal Thermal Loading

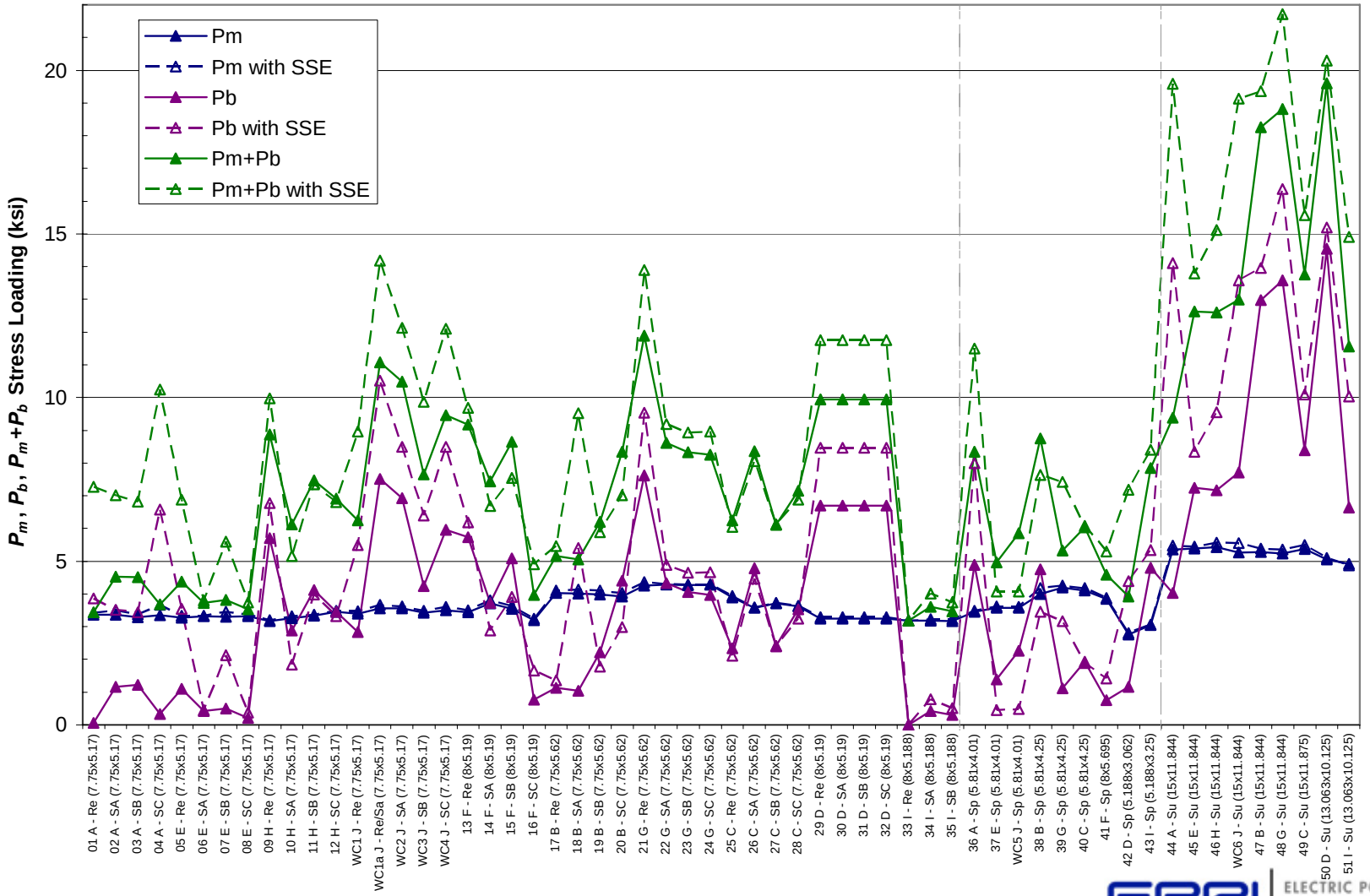

© 2008 Electric Power Research Institute, Inc. All rights reserved.

ELECTRIC POWER RESEARCH INSTITUTE

WRS Modeling

Safety/Relief Nozzle 3D Repair Model Geometry

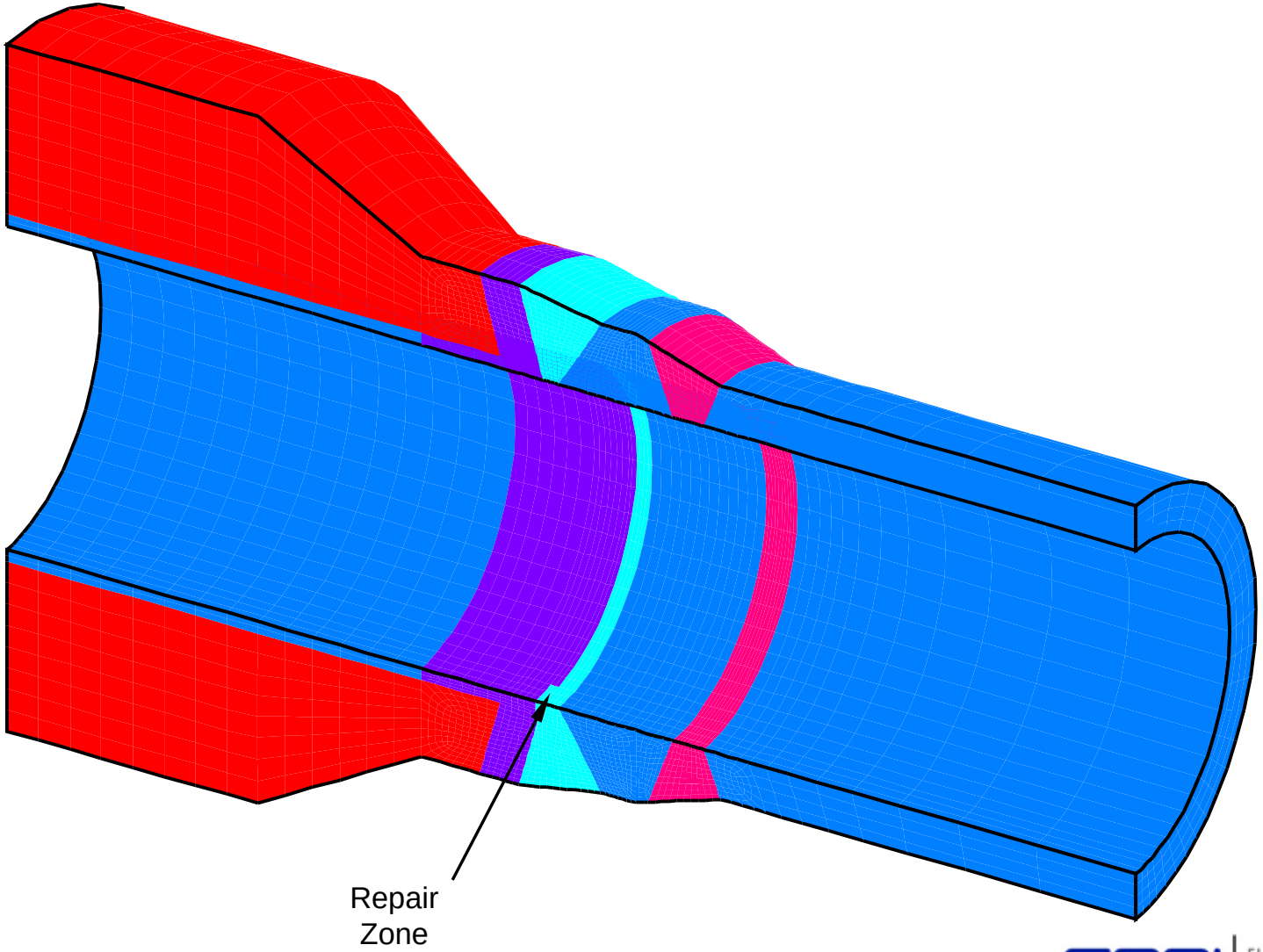

© 2008 Electric Power Research Institute, Inc. All rights reserved.

ELECTRIC POWER RESEARCH INSTITUTE

WRS Modeling

Type 8 Surge Nozzle Model – Element Mesh and Weld Layers

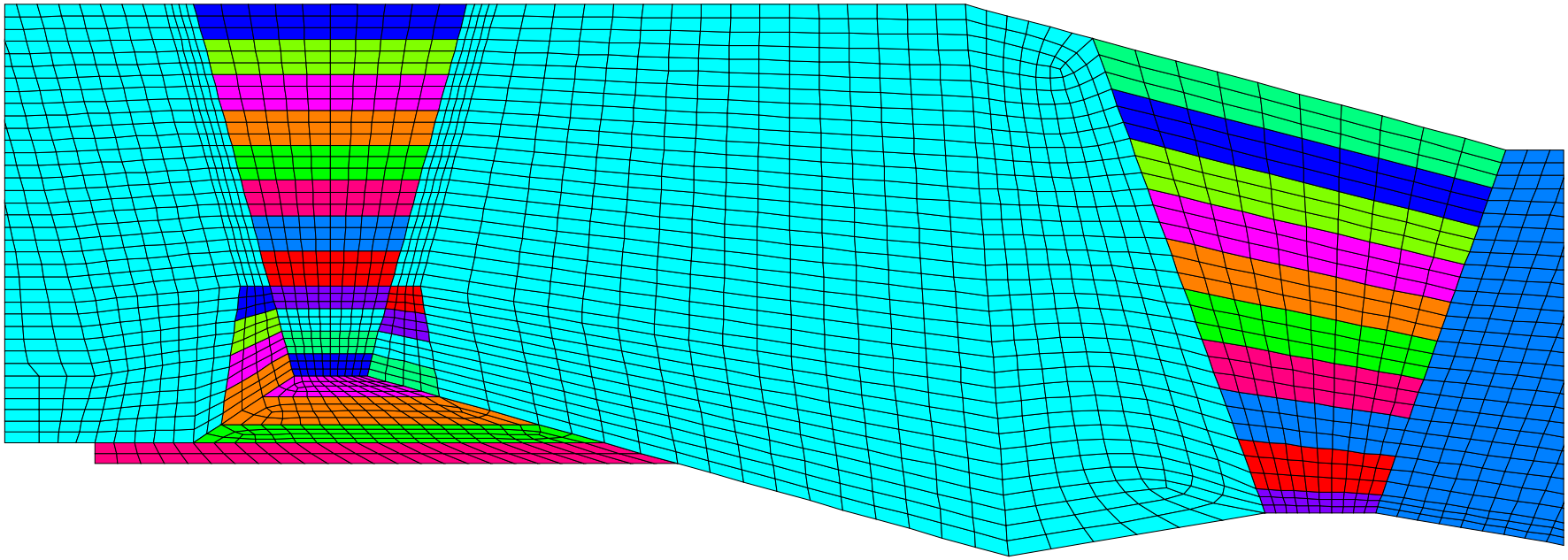

© 2008 Electric Power Research Institute, Inc. All rights reserved.

ELECTRIC POWER RESEARCH INSTITUTE

WRS Modeling

Type 8 Surge Nozzle Analysis Progression

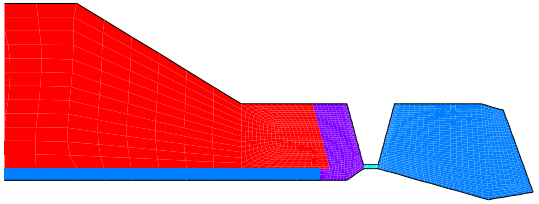

Starting Model

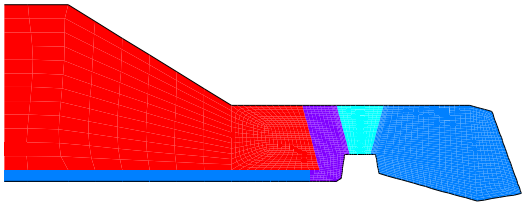

Repair Model

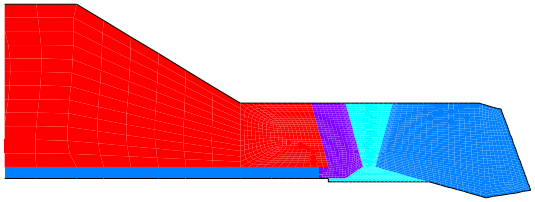

DMW (11 +1 layers) Followed by
Fill-in Weld (4 layers)

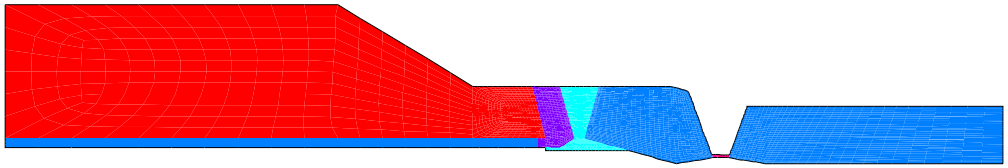

Begin SS Weld (8 layers)

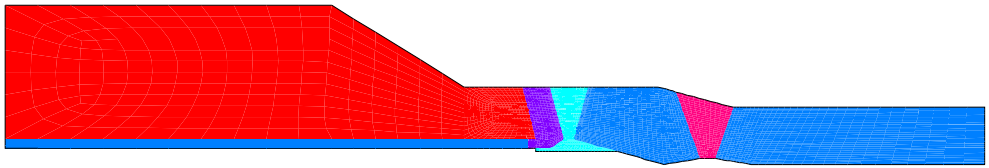

Model Complete

© 2008 Electric Power Research Institute, Inc. All rights reserved.

ELECTRIC POWER RESEARCH INSTITUTE

WRS Modeling

Example Stress Contour Result: Axial Stress at Normal Operating Temperature for Safety/Relief Nozzle (DMW + back-weld + SS weld)

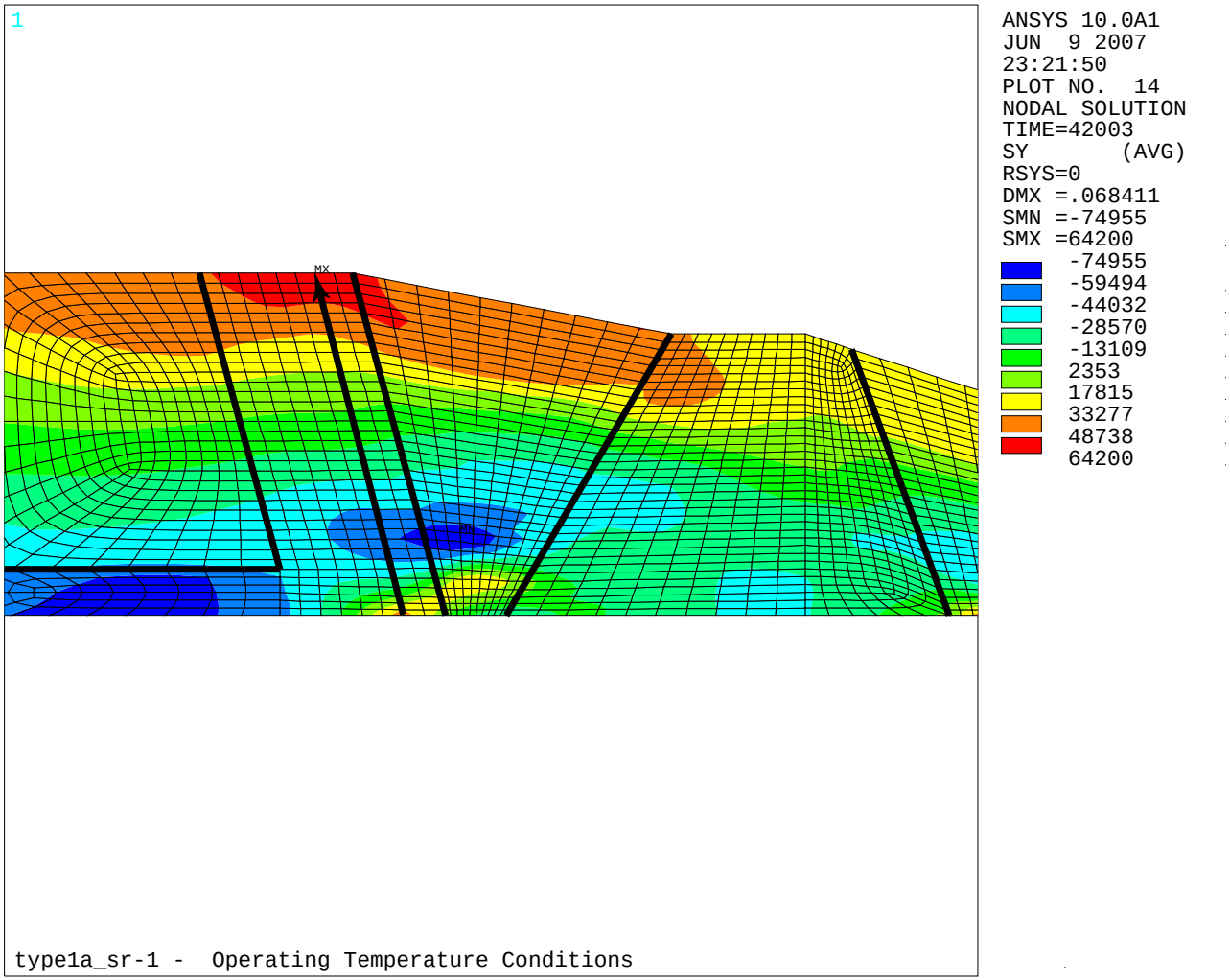

© 2008 Electric Power Research Institute, Inc. All rights reserved.

ELECTRIC POWER RESEARCH INSTITUTE

WRS Modeling

WRS Fit for Type 8 Surge Nozzle Excluding Effect of Stainless Steel Weld (Applied in Case 17b) Compared to DEI and EMC2 WRS FEA Results Including Effect of Stainless Steel Weld

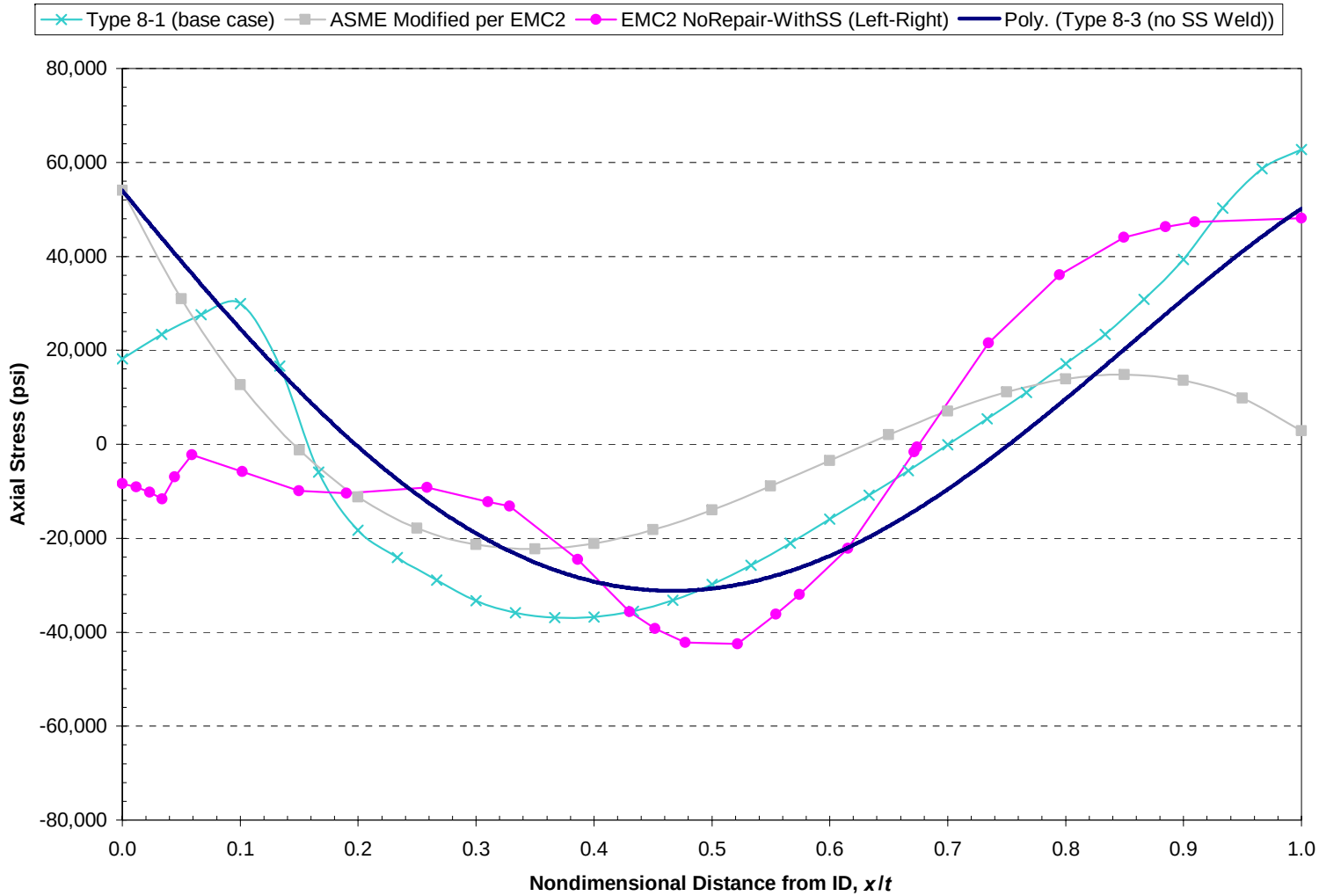

© 2008 Electric Power Research Institute, Inc. All rights reserved.

ELECTRIC POWER RESEARCH INSTITUTE

WRS Validation and Benchmarking

EU Mockup—DEI Butter Axial Stress (Through-Wall Section at Butter Layer Center)

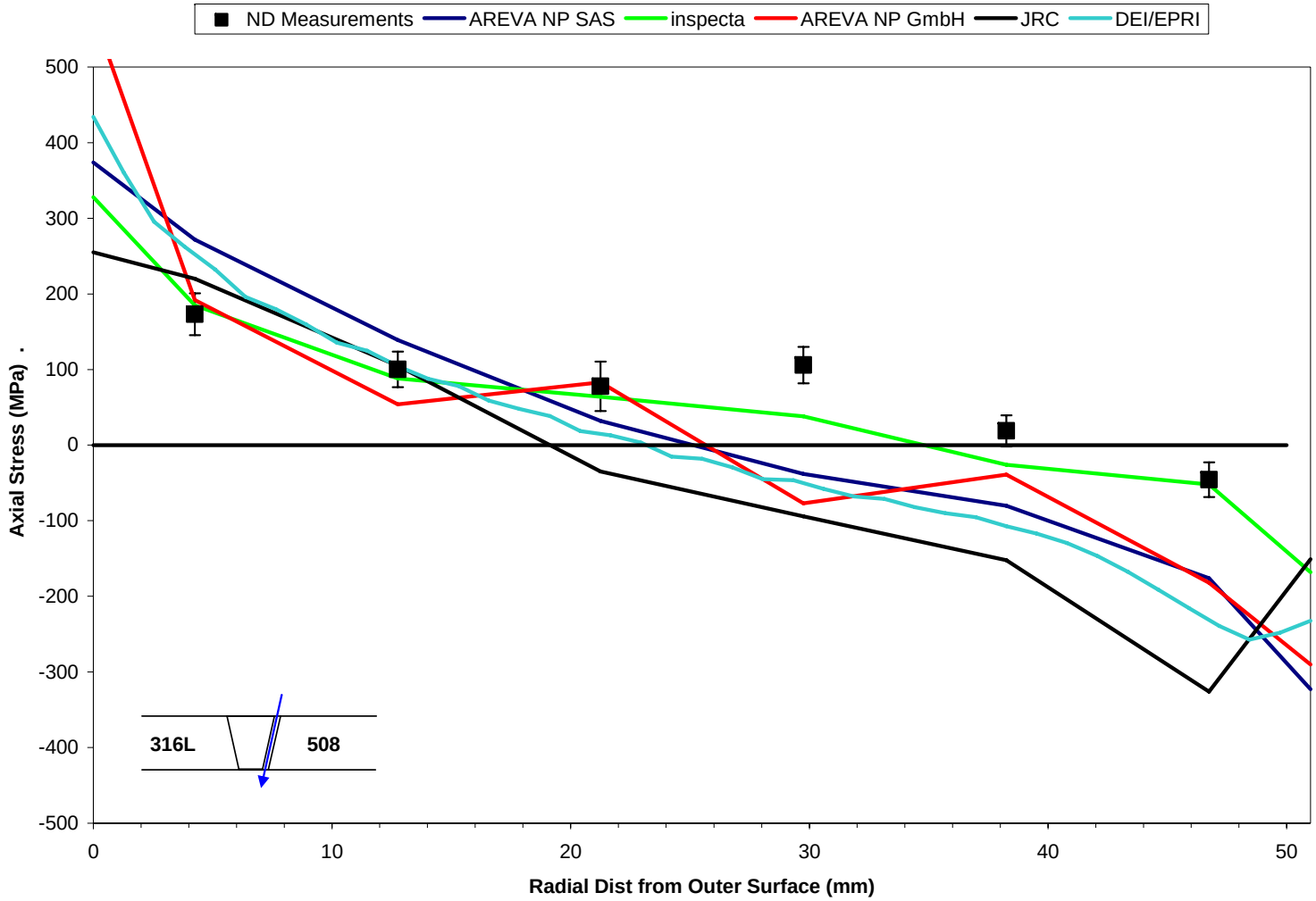

© 2008 Electric Power Research Institute, Inc. All rights reserved.

ELECTRIC POWER RESEARCH INSTITUTE

Crack Growth Modeling Approach
Cylindrical Model

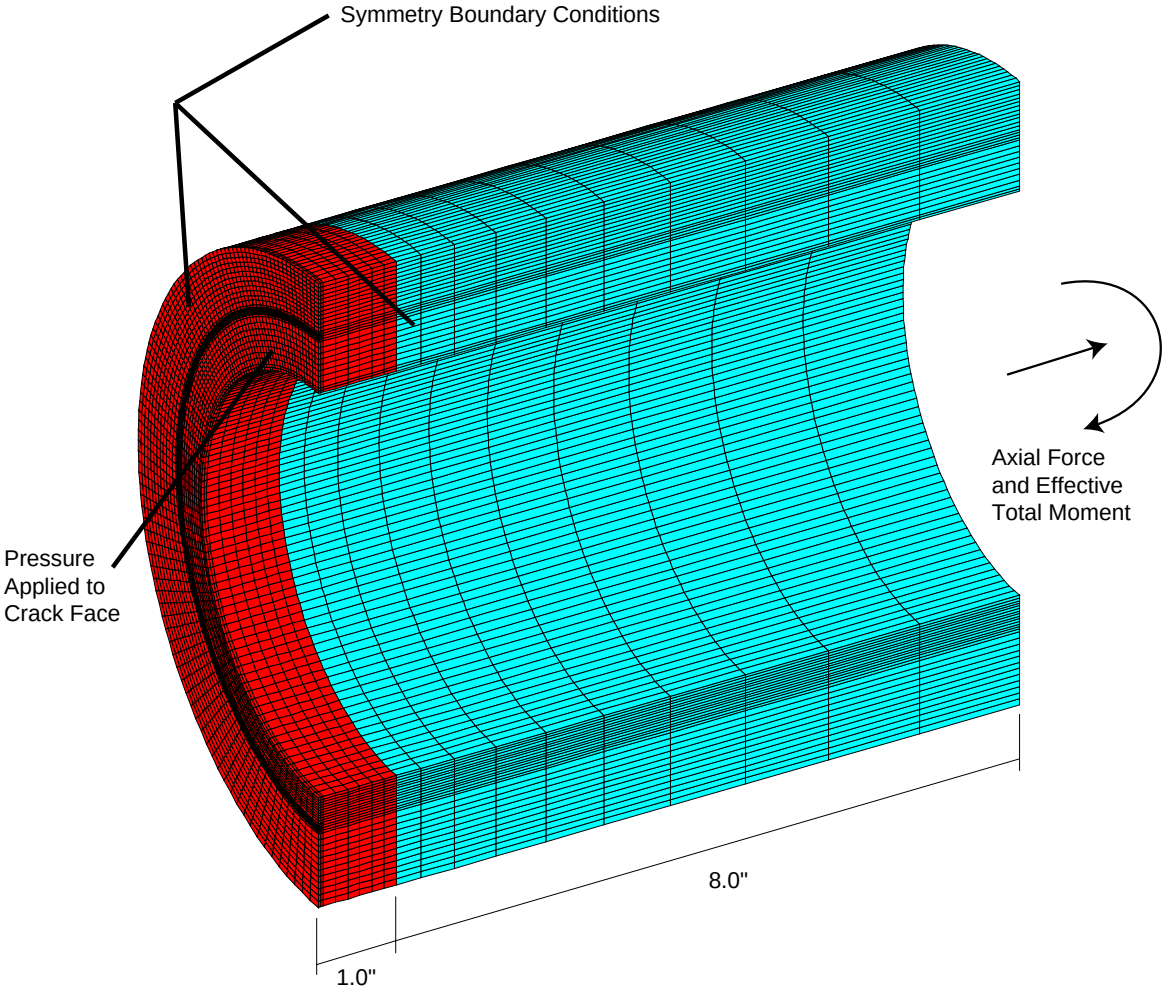

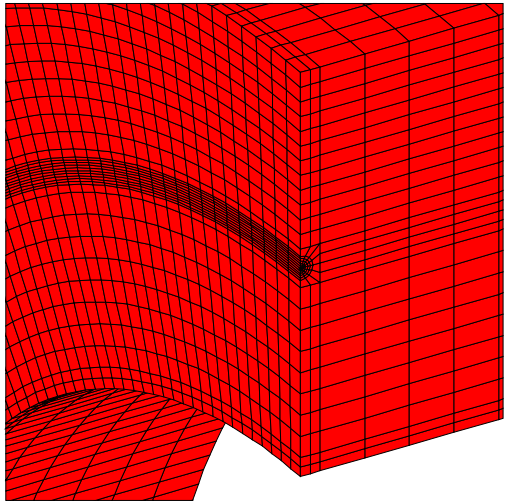

© 2008 Electric Power Research Institute, Inc. All rights reserved.

ELECTRIC POWER RESEARCH INSTITUTE

Crack Growth Modeling Approach

Cylindrical Model: Temperature Simulation of WRS

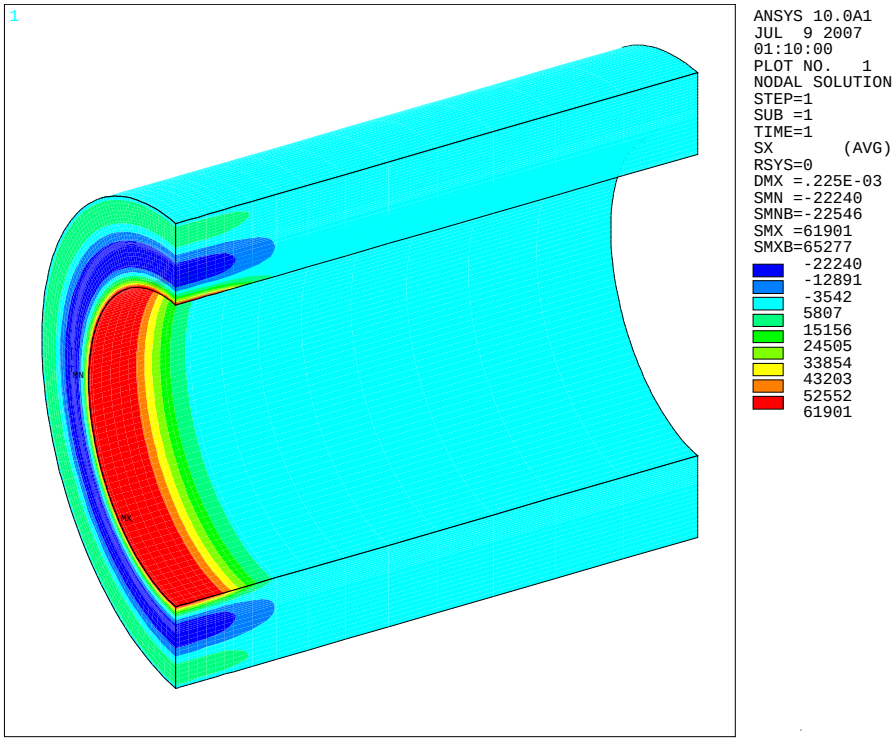

Example of Axisymmetric WRS Simulation

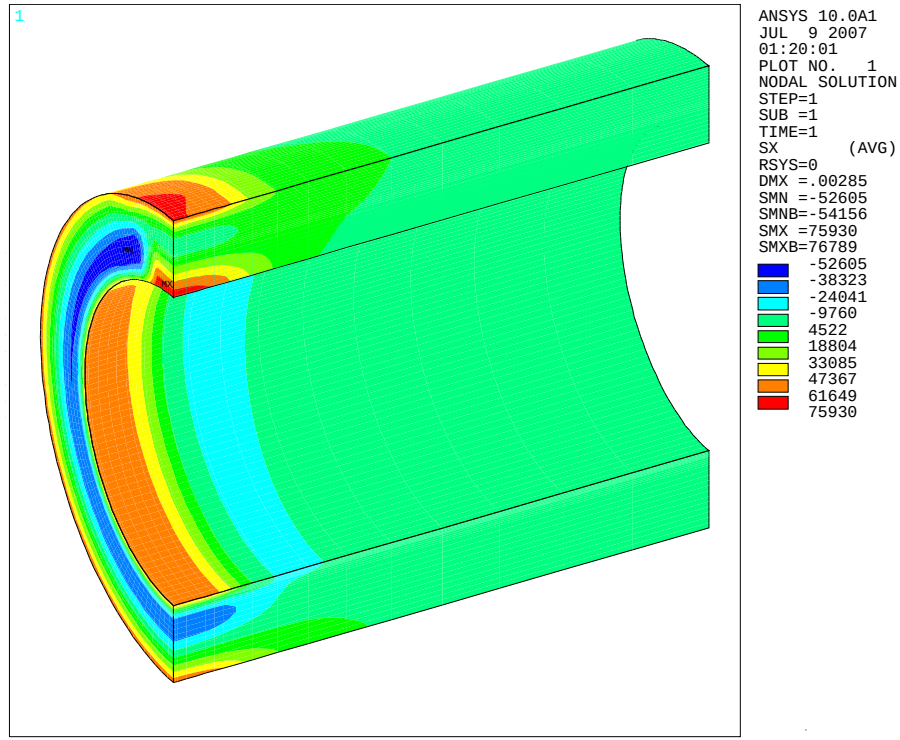

Example of Circumferentially Varying WRS Simulation

© 2008 Electric Power Research Institute, Inc. All rights reserved.

ELECTRIC POWER RESEARCH INSTITUTE

Crack Growth Modeling Approach

Example FEACrack Meshes

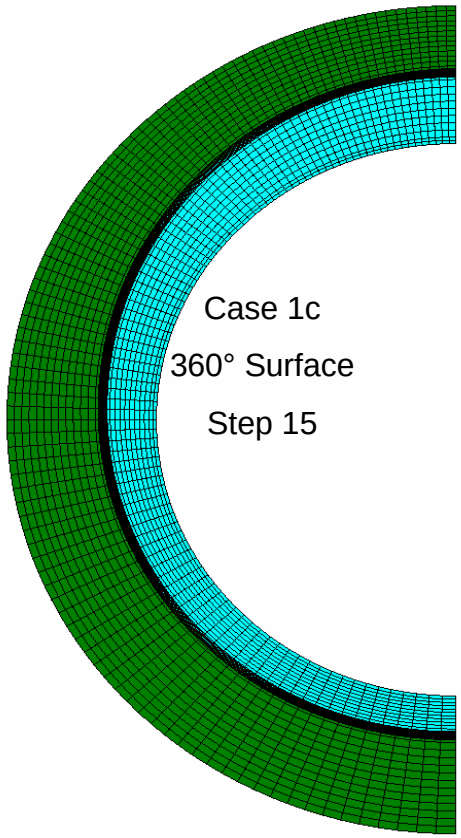

Safety and Relief Case

from 360° 10%TW surface crack

Axisymmetric WRS

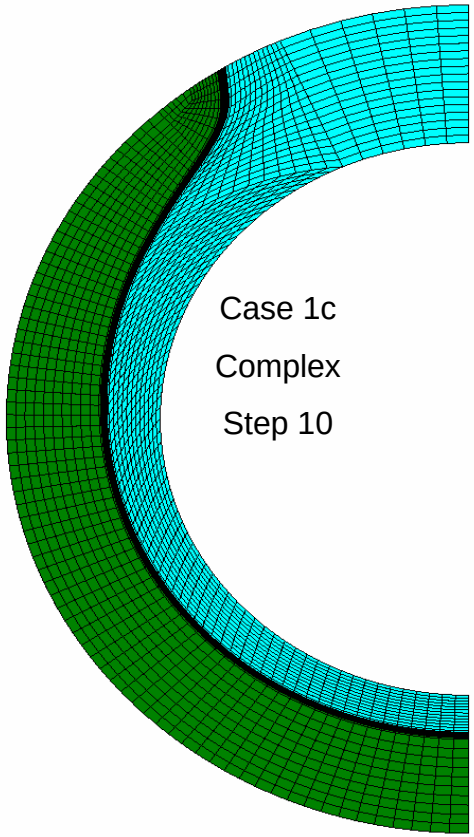

Safety and Relief Case

from 360° 10%TW surface crack

Axisymmetric WRS

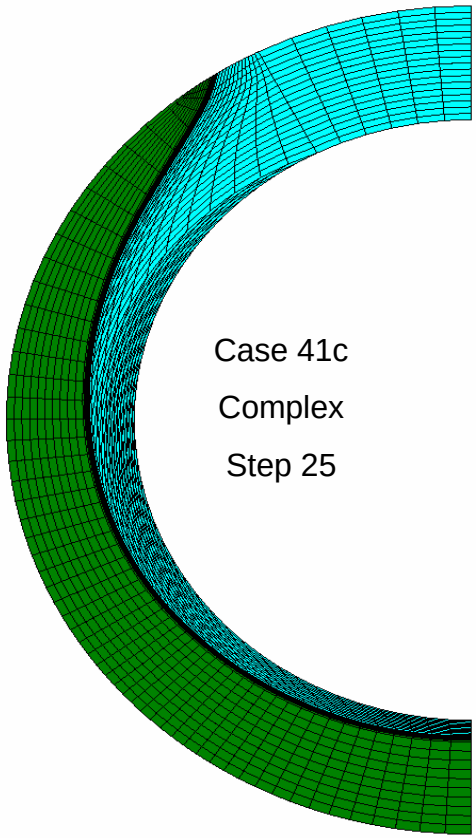

Safety and Relief Case

from 21:1, 40%TW surface crack

Axisymmetric WRS

© 2008 Electric Power Research Institute, Inc. All rights reserved.

ELECTRIC POWER RESEARCH INSTITUTE

Crack Growth Modeling Approach

Example FEACrack Meshes (cont'd)

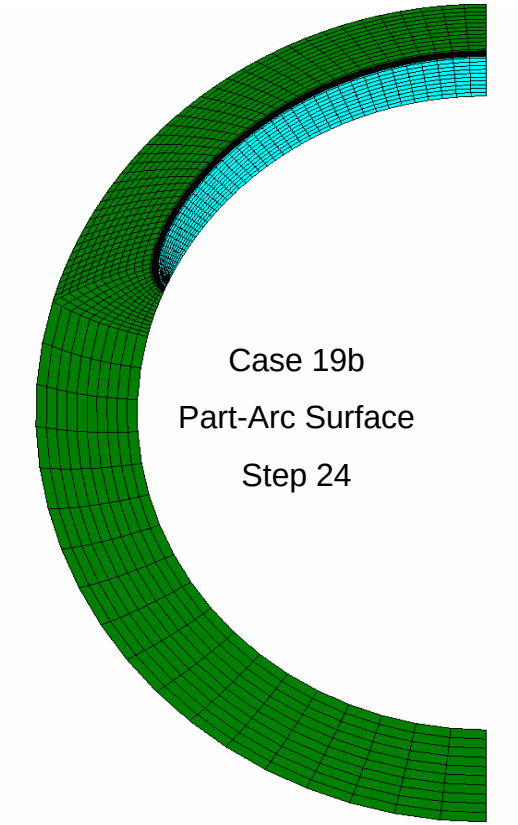

Surge Case

w/ SS Weld, Axisymmetric WRS

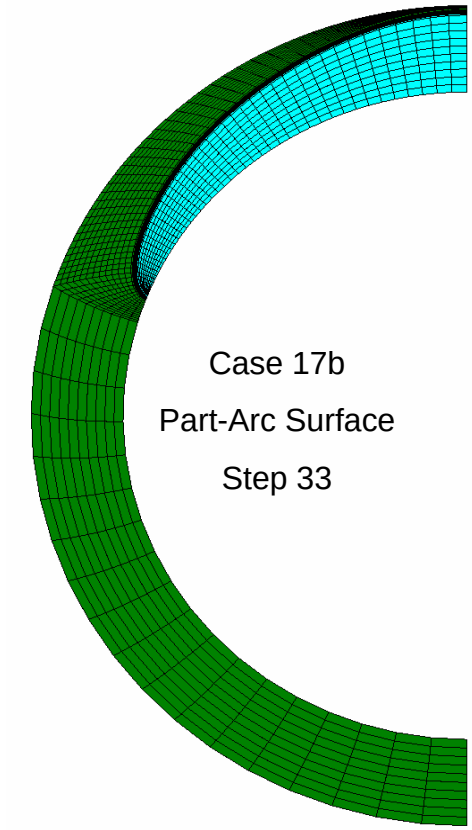

Surge Case

w/o SS Weld, Axisymmetric WRS

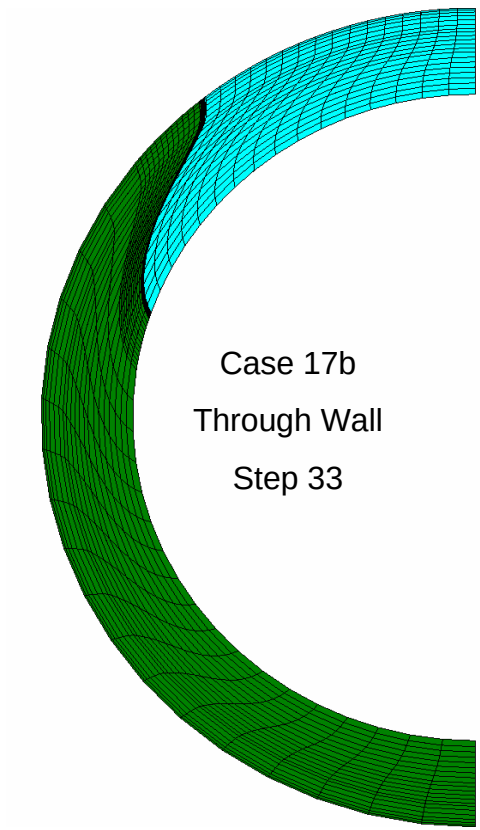

Surge Case

w/o SS Weld, Axisymmetric WRS

© 2008 Electric Power Research Institute, Inc. All rights reserved.

ELECTRIC POWER RESEARCH INSTITUTE

Example FEACrack Meshes (cont'd)

Crack Growth Modeling Approach

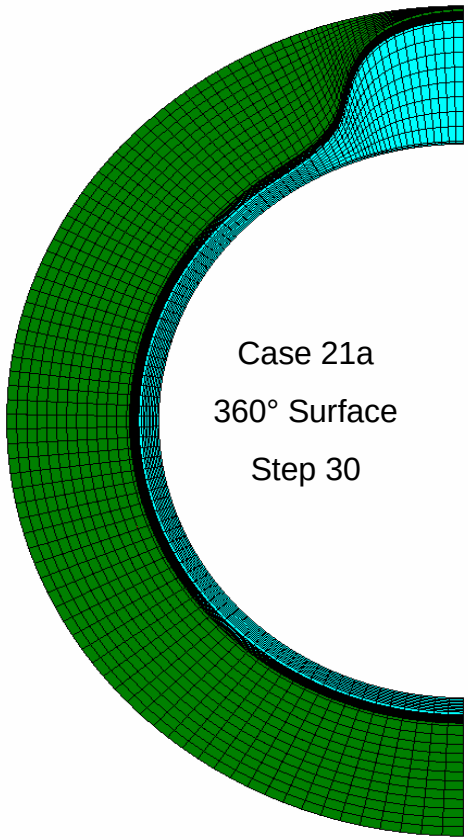

20° ID Repair Case

w/o SS Weld

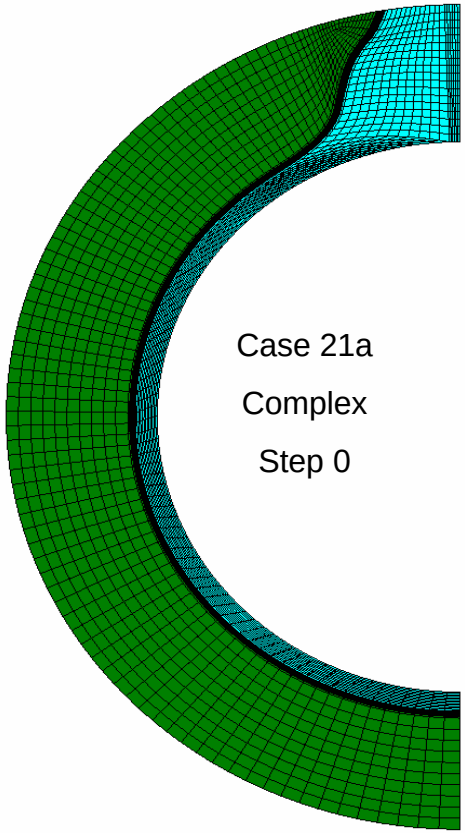

20° ID Repair Case

w/o SS Weld

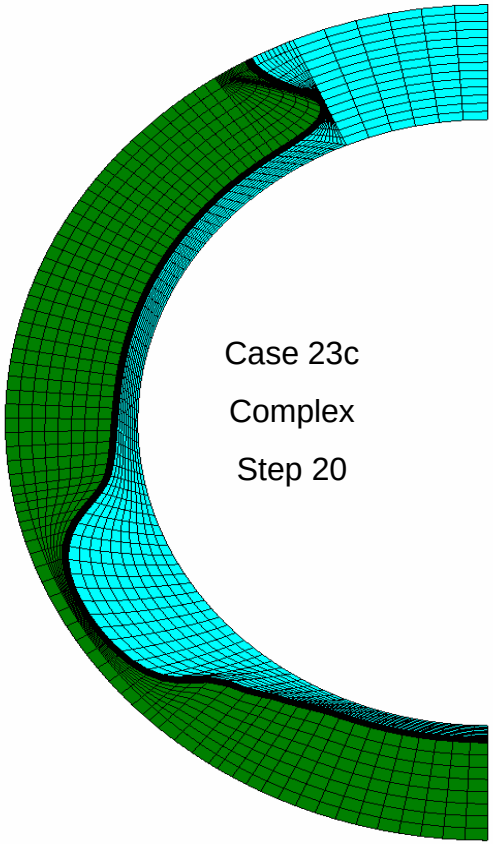

20° ID Repair Case

Three repair zones w/o SS Weld

© 2008 Electric Power Research Institute, Inc. All rights reserved.

ELECTRIC POWER RESEARCH INSTITUTE

Crack Growth Modeling Approach

Nozzle-to-Safe-End Model (Type 8 Surge Nozzle)

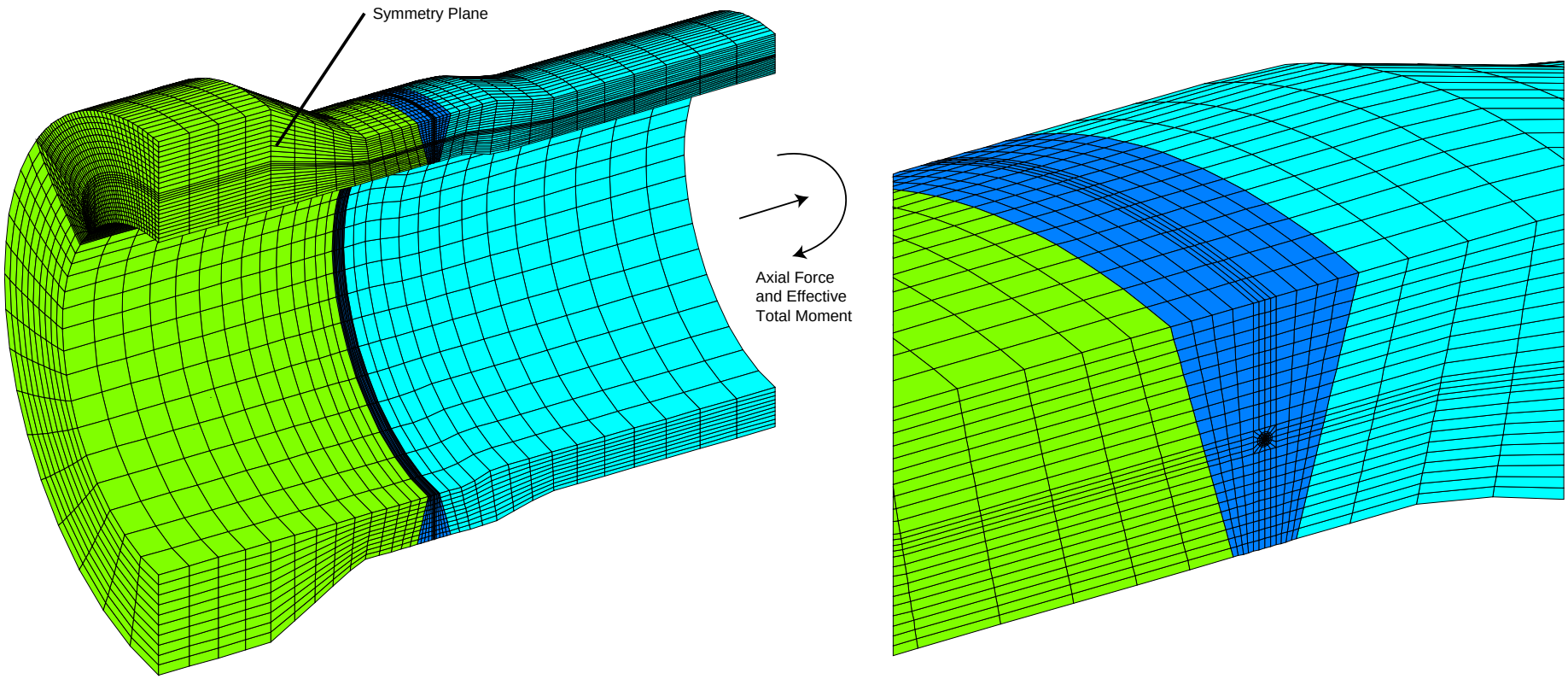

© 2008 Electric Power Research Institute, Inc. All rights reserved.

ELECTRIC POWER RESEARCH INSTITUTE

Phase I Crack Growth Calculations

Results for WC Relief Nozzle (December 2006 Inputs)

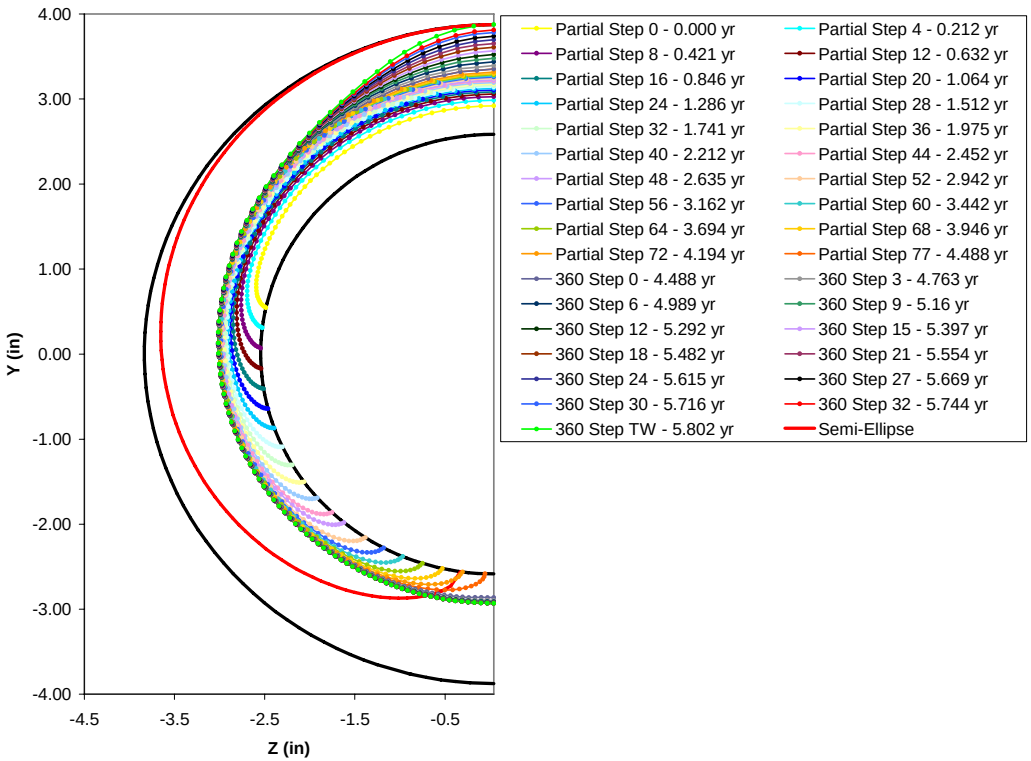

Surface Crack Progression

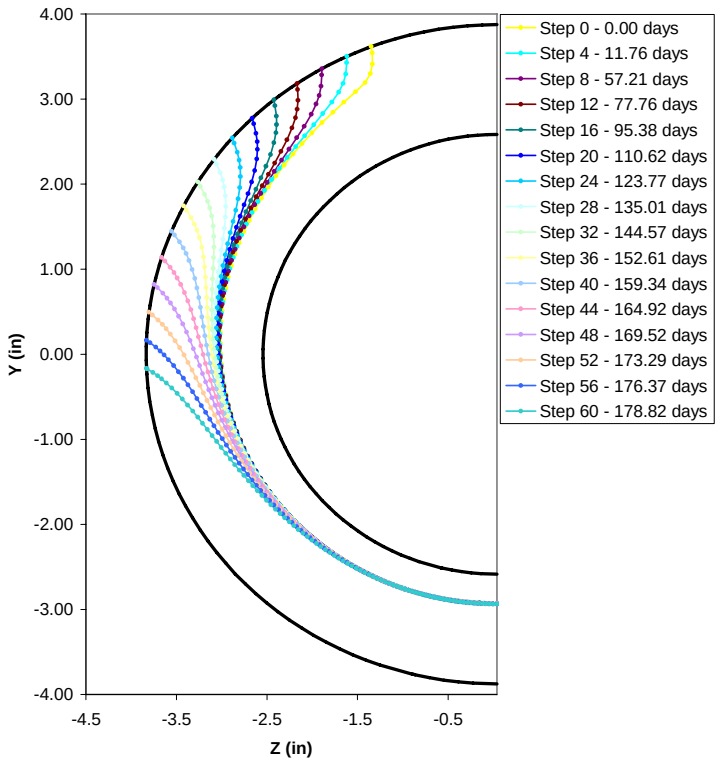

Complex Crack Progression

© 2008 Electric Power Research Institute, Inc. All rights reserved.

ELECTRIC POWER RESEARCH INSTITUTE

Phase I Crack Growth Calculations

Crack Stability and Leak Rate Results

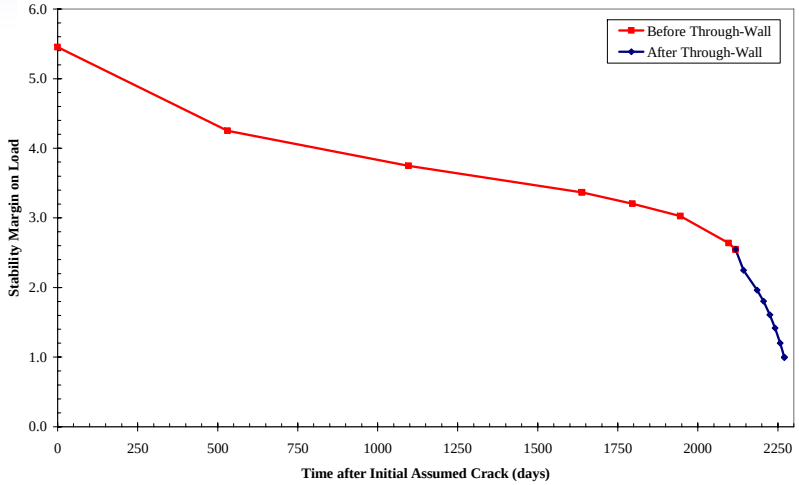

Complete Crack
Stability Development

Stability and Leak Rate
Trends for Complex Crack

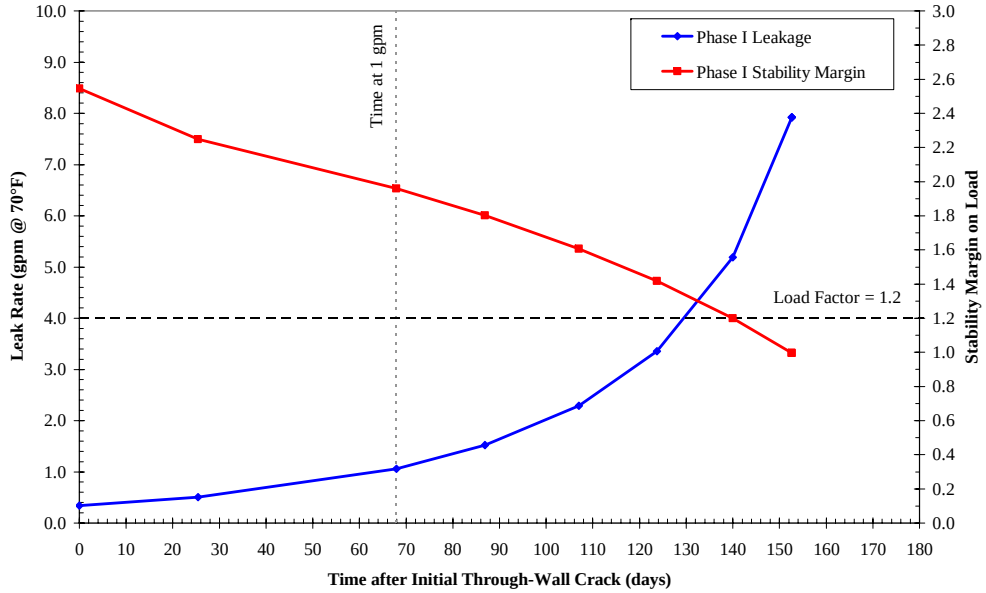

© 2008 Electric Power Research Institute, Inc. All rights reserved.

ELECTRIC POWER RESEARCH INSTITUTE

Stress Intensity Factor Verification

Comparison of DEI and EMC2 Results for Analytical Cracks

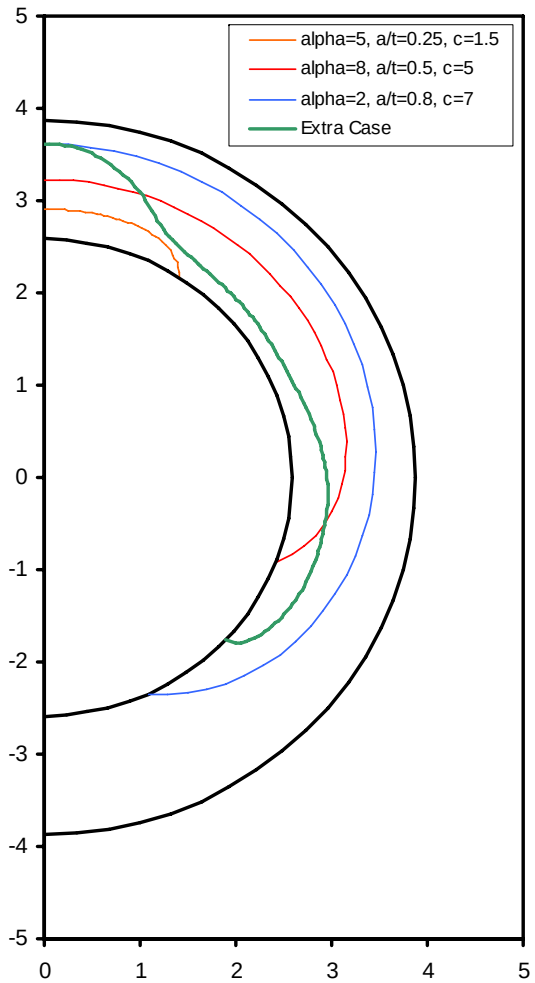

Assumed Nonstandard Crack Profiles

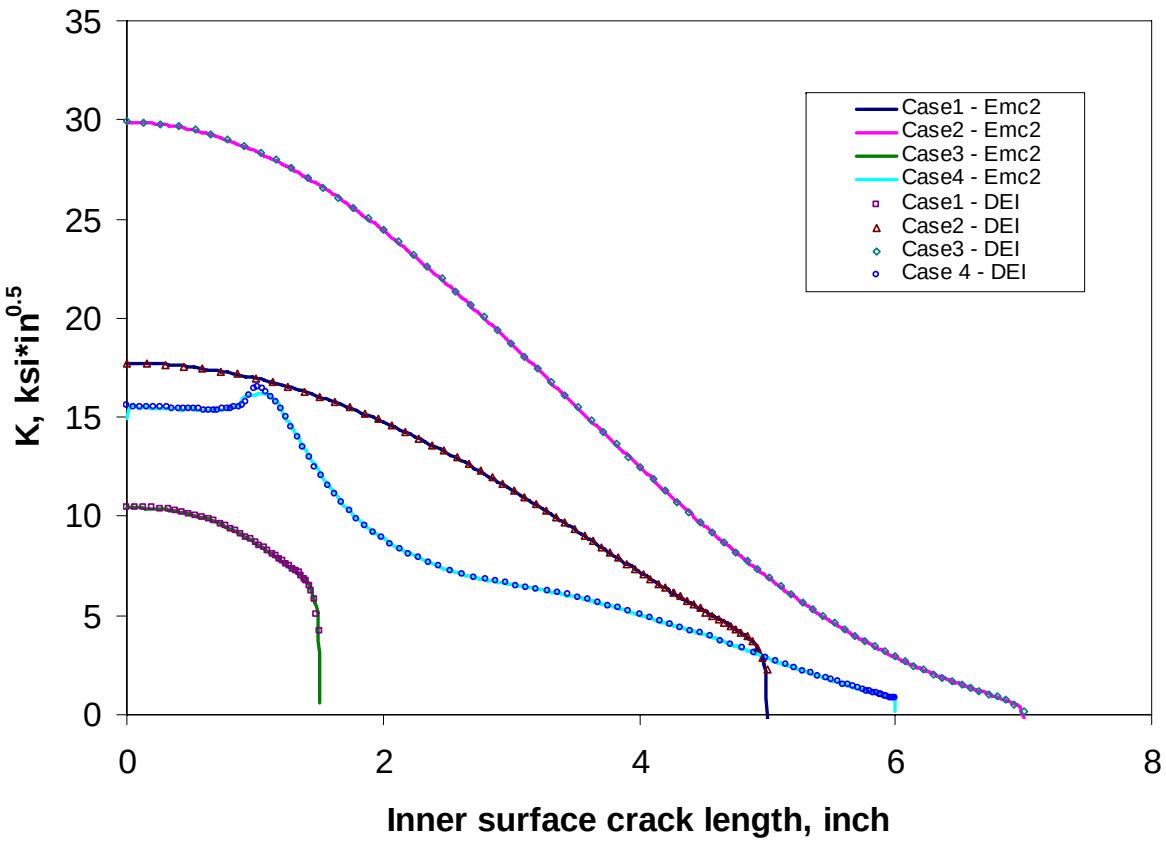

Comparison of DEI and EMC2 Results Showing Close Agreement Using Independent Software Models

© 2008 Electric Power Research Institute, Inc. All rights reserved.

ELECTRIC POWER RESEARCH INSTITUTE

Crack Growth Convergence Checks

Temporal and Spatial Checks Demonstrating Convergence

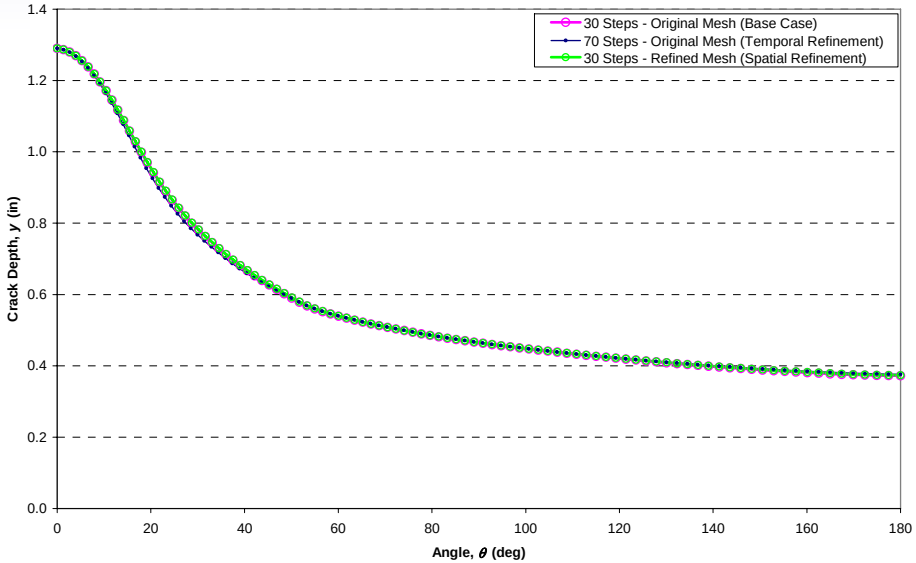

Surface Crack Growth Progression Starting from Identical Initial Surface Flaw (Case 1c)

Complex Crack Growth Progression Starting from Identical Initial Complex Flaw (Case 1c)

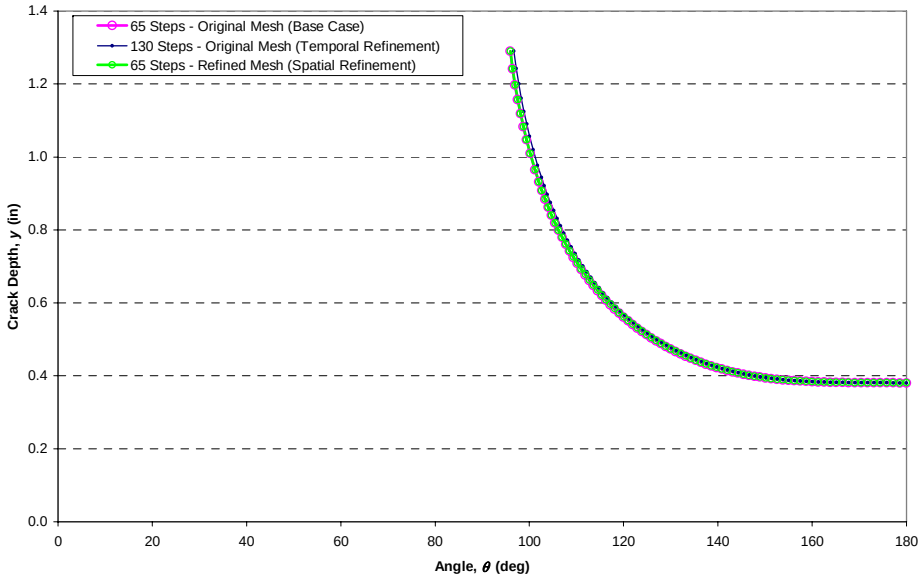

© 2008 Electric Power Research Institute, Inc. All rights reserved.

ELECTRIC POWER RESEARCH INSTITUTE

Critical Crack Size Calculations
Approach

- The flow strength for net section collapse (NSC) based on the safe end material tensile properties
- NSC equations developed by Rahman and Wilkowski were used to calculate critical crack size for an arbitrary crack shape
  - Spreadsheet calculation was verified against Arbitrary Net Section Collapse (ANSC) software developed by Structural Integrity Associates
- Full normal thermal stress used to calculate the critical crack size
  - Full scale SS and Alloy 600 pipe tests and piping system FEA compliance studies support reduced thermal loads prior to collapse
- Applied Z-factor to reduce supportable moment to consider effect of EPFM failure mechanism
  - Full scale SS and Alloy 600 pipe tests support limit load failure mechanism
  - Comparison of J-R curve fracture toughness demonstrates Alloy 182 weld metal is similar to the pipe test materials
- Critical load for various calculated crack growth progressions checked against reported operating load to determine load margin factor vs. time

© 2008 Electric Power Research Institute, Inc. All rights reserved.

Critical Crack Size Calculations

Force and Moment Equilibrium for Arbitrary Crack

- Rahman and Wilkowski have published the thin-wall solution for axial force and applied moment equilibrium given a circumferential flaw with arbitrary depth profile
- DEI implemented this solution in spreadsheet form
- The solution was applied to crack profiles calculated by the FEACrack software
  - Case 1: Entire crack in tension
  - Case 2a: Part of crack in compression zone with crack taking compression
  - Case 2b: Part of crack in compression zone with crack not taking compression
- Arbitrary Net Section Collapse (ANSC) software by Structural Integrity Associates used to validate spreadsheet calculation
  - ANSC also allows arbitrary moment direction, unlike Rahman and Wilkowski

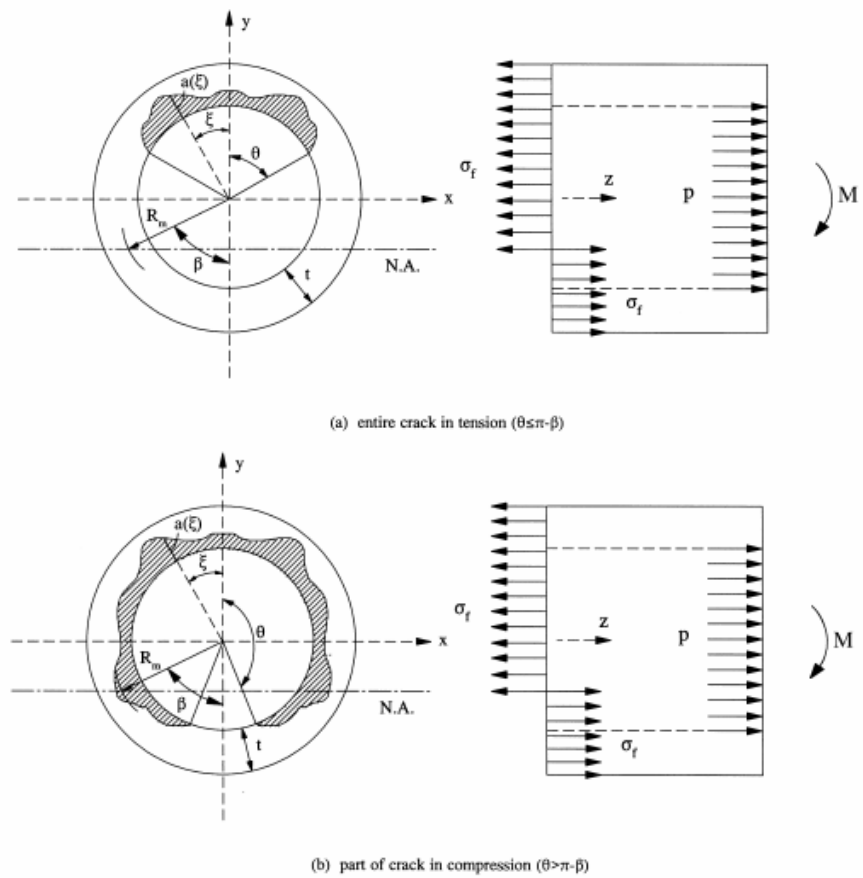

S. Rahman and G. Wilkowski, "Net-Section-Collapse Analysis of Circumferentially Cracked Cylinders—Part I: Arbitrary-Shaped Cracks and Generalized Equations," *Engineering Fracture Mechanics*, Vol. 61, pp. 191-211, 1998.

© 2008 Electric Power Research Institute, Inc. All rights reserved.

ELECTRIC POWER RESEARCH INSTITUTE

Critical Crack Size Calculations
Treatment of Loads

- These types of loads are included in the net section collapse calculation:
  - Internal pressure (including on crack face)
  - Dead weight
  - Normal pipe thermal expansion
- These types of loads are not included:
  - Welding residual stress
  - Effect of thermal stratification for surge nozzles
  - Local thermal stress due to differential thermal expansion (Q-stress), including due to plant transients
  - Seismic loads
  - Safety and relief valve discharge loads
  - LOCA loads

© 2008 Electric Power Research Institute, Inc. All rights reserved.

Critical Crack Size Calculations

Reduction of Secondary Load with Crack Extension

- Appendix B presents piping models developed for the surge lines of two representative plants to evaluate the maximum capacity of the secondary loads to produce rotation at a cracked surge nozzle, relative to the rotational tolerance of a nozzle weld containing a large complex crack
- Appendix C describes elastic and elastic-plastic finite element analyses of a pipe with an idealized through-thickness crack that were used to determine the effect on bending moment and crack driving force due to an imposed end rotation
  - Because of the finite amount of strain imposed by the rotation, the results (at right) show that the moment knock-down factor and crack driving force relative to the load controlled case decrease significantly as the crack length increases

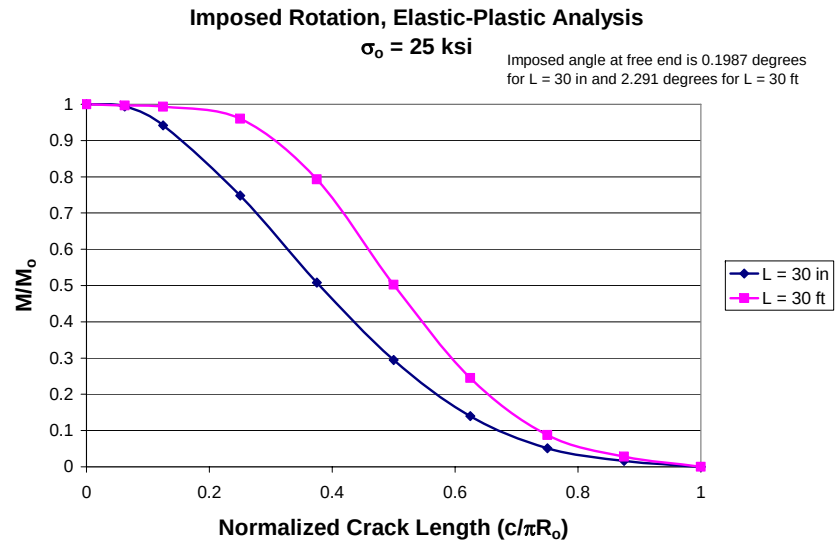

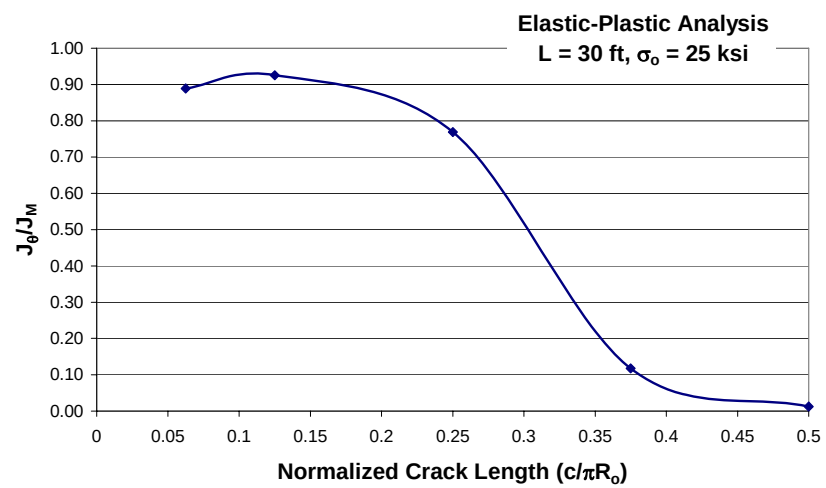

© 2008 Electric Power Research Institute, Inc. All rights reserved.

Leak Rate Modeling

Scoping Results Based on WC Relief Nozzle DM Weld Dimensions and COD Calculated by PICEP and SQUIRT

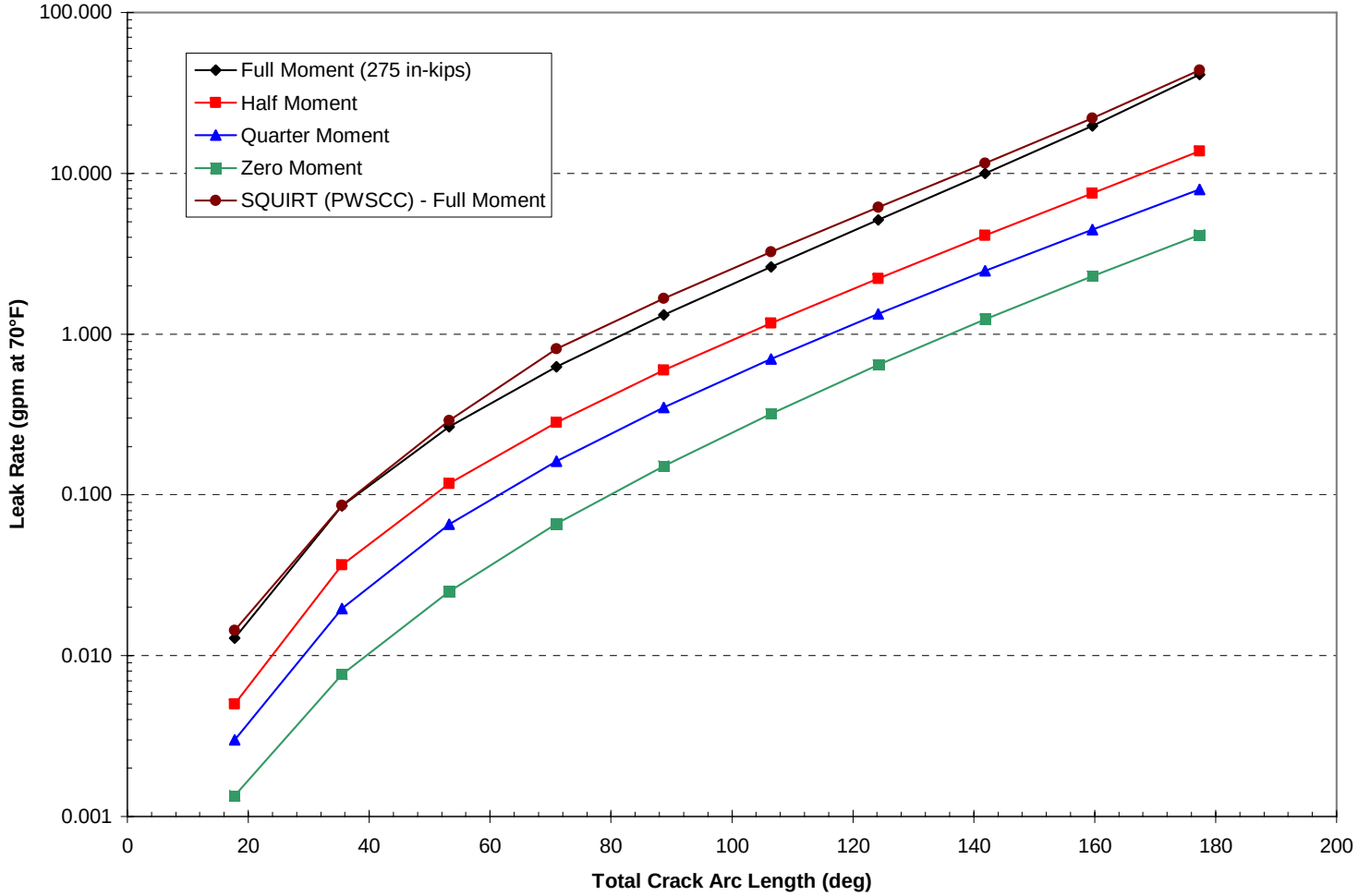

© 2008 Electric Power Research Institute, Inc. All rights reserved.

ELECTRIC POWER RESEARCH INSTITUTE

Leak Rate Modeling

Example Crack Opening Displacements (Half COD)

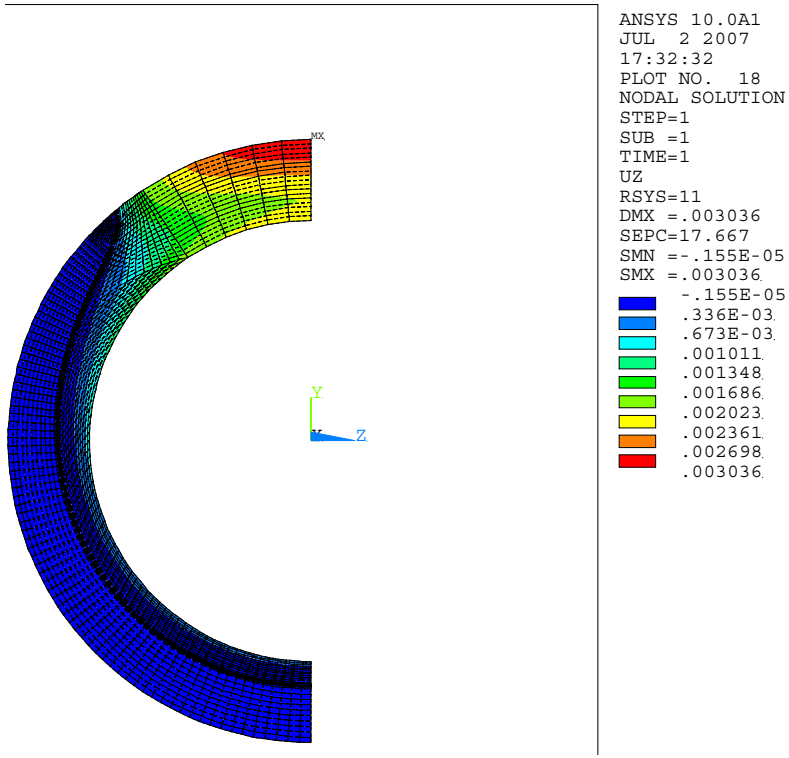

Case 12 – 1 gpm leak rate

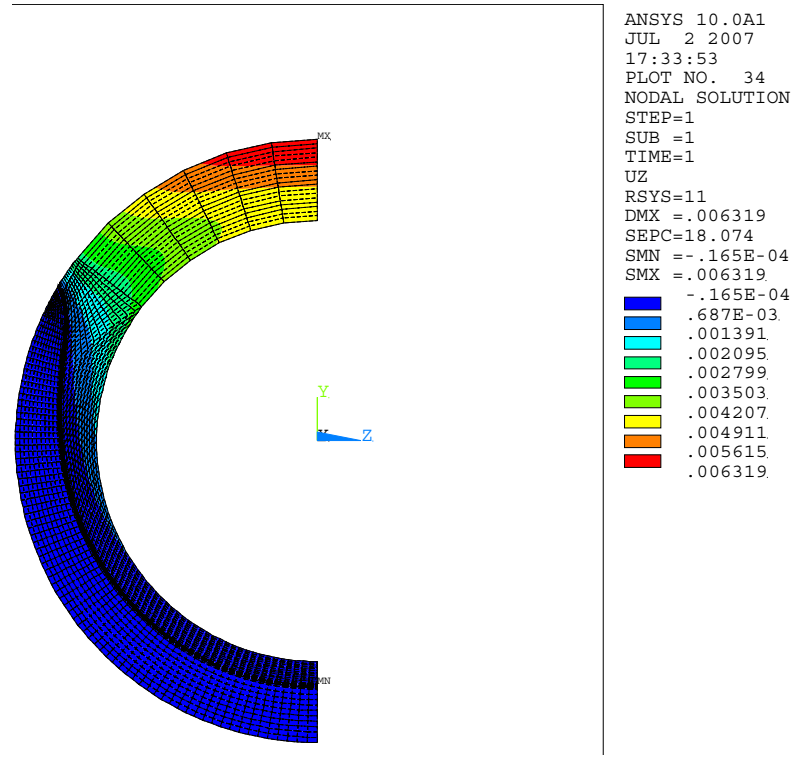

Case 12 – Stability Load Margin Factor = 1.2

© 2008 Electric Power Research Institute, Inc. All rights reserved.

ELECTRIC POWER RESEARCH INSTITUTE

Analysis Case Matrix
Evaluation Criteria

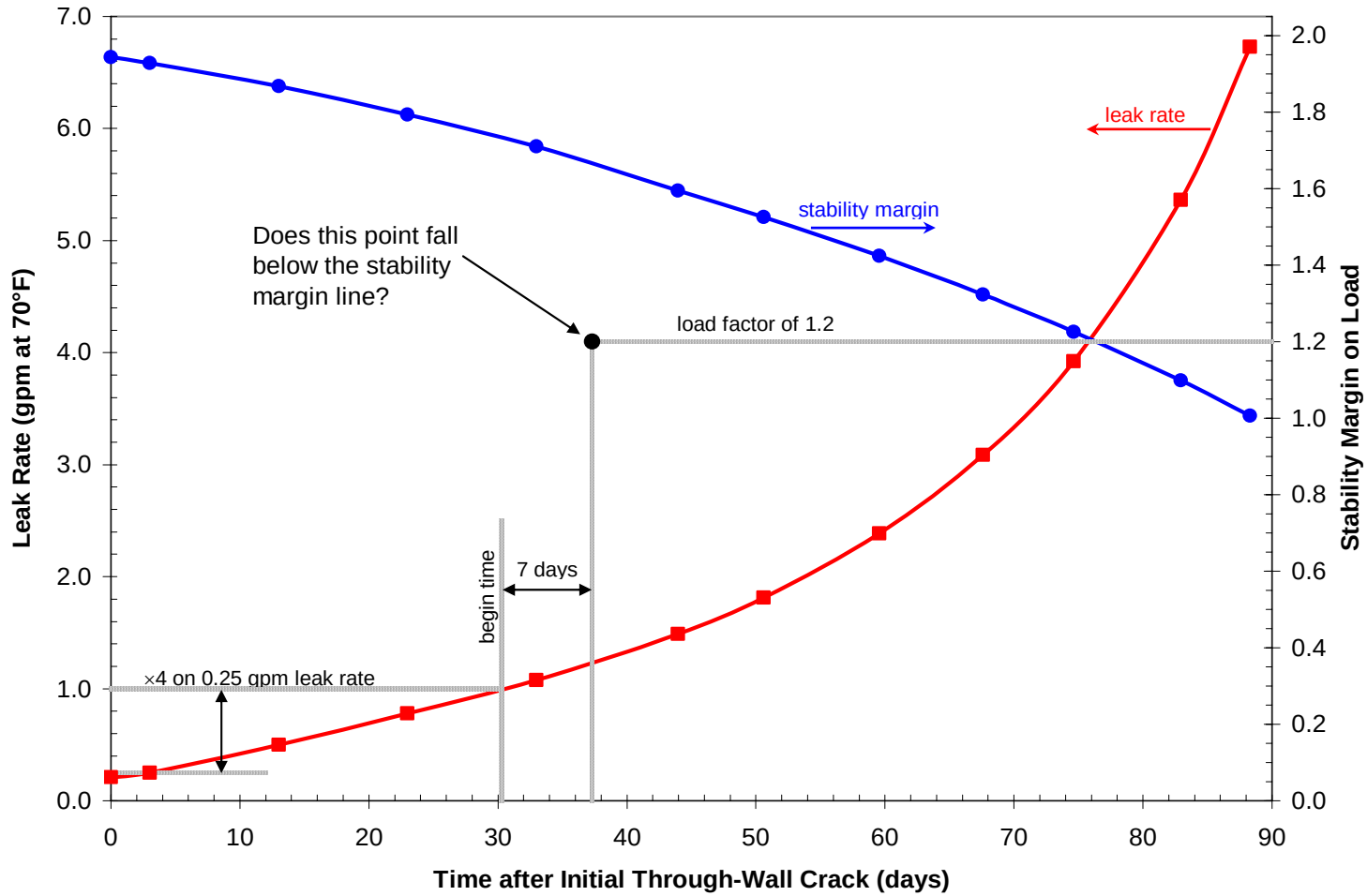

Illustration of Approach for Hypothetical Leakage and Stability Data

© 2008 Electric Power Research Institute, Inc. All rights reserved.

ELECTRIC POWER RESEARCH INSTITUTE

Analysis Case Matrix
Sensitivity Parameters

- Fracture Mechanics Model Type
  - Cylindrical
  - Nozzle-to-Safe-End
- Plant Specific Geometries
- Plant Specific Piping Loads
- Welding Residual Stresses
  - Axisymmetric
  - ID Weld Repair
- Crack Growth Rate Equation
- Initial Flaw Geometry
- Effect of Multiple Crack Initiation Sites

© 2008 Electric Power Research Institute, Inc. All rights reserved.

Analysis Case Matrix
Effect of Multiple Crack Initiation Sites

- Sensitivity cases investigate the effect of multiple crack initiation (e.g., Wolf Creek surge nozzle NDE results)
  - Enveloping of multiple initial flaws with one modeled flaw
  - Modeling of a part-depth 360° flaw
  - Growing multiple individual flaws and then combining on a single weld cross section for stability calculation

© 2008 Electric Power Research Institute, Inc. All rights reserved.

Analysis Case Matrix
Definition of Case Matrix

- Up to three WRS profiles applied to each case
  - Geometry and load base cases (1-20)
    - Axisymmetric WRS
    - Moment load varied up to maximum reported for specific configuration
  - ID repair base cases (21-26)
    - Non-axisymmetric WRS based on ID repair WRS FEA
  - Further bending moment sensitivity cases (27-30)
  - Sensitivity cases to investigate potential uncertainty in as-built dimensions (31-32)
    - Hypothetical ±10% variation in weld thickness
  - Axial membrane load sensitivity cases (33-34)
    - Relatively narrow range in membrane load for each geometry
  - Effect of length over which thermal strain simulating WRS is applied (35)

© 2008 Electric Power Research Institute, Inc. All rights reserved.

Analysis Case Matrix
Definition of Case Matrix (cont'd)

- Simulation of elastic-plastic redistribution of stress at ID (36)
- Effect of initial crack shape and depth (37-41)
- Effect of stress intensity factor dependence of crack growth rate equation (42-47)
  - 5th percentile exponent of 1.0 or 95th percentile exponent of 2.2 assumed
- Effect of pressure drop along leaking crack (48)
  - Other cases assume full primary pressure applies to leaking crack face
- Effect of relaxation of normal operating thermal load (49-51)
  - For through-wall portion of crack growth progression, the normal thermal load has been eliminated for these sensitivity cases (for crack growth, leak rate, and critical crack size calculations)
- Effect of nozzle-to-safe-end crack growth model vs. standard cylindrical crack growth model (52-53)
  - Investigate effect of detailed geometry
- Supplementary cases specific to effect of multiple flaws on limiting surge nozzles (S1-S9)

© 2008 Electric Power Research Institute, Inc. All rights reserved.

Matrix Results
Sensitivity Summary

Case #	WRS Subcase	Base Case	Qualitative Sensitivity Description	Quantitative Sensitivity Description	Result Comparison: Time Interval from 1 gpm to a Stability Margin Factor of 1.2 [days]		Result Comparison: Stability Margin Factor at 1 gpm (or at initial leak rate if higher)		Result Comparison: Calculated Leak Rate (at 70°F) at a Stability Margin Factor of 1.2 [gpm]	
					from	*to*	*from*	*to*	*from*	*to*
2	c	1c	Case 1c with intermediate bending moment	Pb *from* 5.71 ksi *to* 5.30 ksi	109	118	2.24	2.31	5.81	5.89
3	c	1c	Case 1c with low bending moment	Pb *from* 5.71 ksi *to* 4.88 ksi	109	125	2.24	2.40	5.81	6.22
5	c	4c	Case 4c with low bending moment	Pb *from* 5.74 ksi *to* 4.88 ksi	112	137	2.18	2.35	5.22	5.81
7	c	6c	Case 6c with low bending moment	Pb *from* 7.63 ksi *to* 4.78 ksi	41	71	1.70	2.01	4.04	5.44
9	c	8c	Case 8c with low bending moment	Pb *from* 6.70 ksi *to* 4.88 ksi	99	144	2.14	2.50	5.58	6.56
11	c	10c	Case 10c with low bending moment	Pb *from* 4.89 ksi *to* 4.50 ksi	73	73	2.07	2.08	3.81	3.70
13	c	12c	Case 12c with low bending moment	Pb *from* 4.75 ksi *to* 4.13 ksi	48	54	1.86	1.94	3.54	3.49
16	c	15c	Case 15c with low bending moment	Pb *from* 4.65 ksi *to* 4.13 ksi	*arrest*	*arrest*	*arrest*	*arrest*	*arrest*	*arrest*
17	b	17a	Case 17a with shifted weld residual stress	WRS *from* w/ SS weld *to* w/o SS weld	*arrest*	35	*arrest*	1.71	*arrest*	69.28
18	a	17a	Case 17a with low bending moment	Pb *from* 13.57 ksi *to* 4.88 ksi	*arrest*	*arrest*	*arrest*	*arrest*	*arrest*	*arrest*
18	b	17b	Case 17b with low bending moment	Pb *from* 13.57 ksi *to* 4.88 ksi	35	43	1.71	1.79	69.28	15.79
20	b	19b	Case 19b with low bending moment	Pb *from* 14.55 ksi *to* 6.65 ksi	*arrest*	*arrest*	*arrest*	*arrest*	*arrest*	*arrest*
21	a	1c	Case 1c with a 20° ID repair (WRS w/o SS weld)	WRS *from* ASME 3/30 fit *to* 20° ID repair w/o SS weld	109	>>21	2.24	4.42	5.81	1.28 (note 1)
22	a	3c	Case 3c with a 20° ID repair (WRS w/o SS weld)	WRS *from* ASME 3/30 fit *to* 20° ID repair w/o SS weld	125	>>17	2.40	4.78	6.22	1.25 (note 1)
23	a	6c	Case 6c with a 20° ID repair (WRS w/o SS weld)	WRS *from* ASME 3/30 fit *to* 20° ID repair w/o SS weld	41	>>37	1.70	3.36	4.04	1.67 (note 1)
23	b	6c	Case 6c with a 20° ID repair (modified ASME WRS)	WRS *from* ASME 3/30 fit *to* 20° ID repair modified ASME	41	173	1.70	2.98	4.04	6.44
23	c	6c	Case 6c with a 20° ID repair (WRS w/o SS weld) and multiple repairs	WRS *from* ASME 3/30 fit *to* 20° ID repair w/o SS weld; Number of Repairs *from* 1 *to* 3	41	>>21	1.70	2.99	4.04	1.22 (note 1)
24	a	7c	Case 7c with a 20° ID repair (WRS w/o SS weld)	WRS *from* ASME 3/30 fit *to* 20° ID repair w/o SS weld	71	>>21	2.01	4.24	5.44	1.31 (note 1)
25	a	17a	Case 17a with an ID repair (WRS w/ SS weld)	WRS *from* w/ SS weld *to* ID repair w/ SS weld	*arrest*	78	*arrest*	2.12	*arrest*	98.51
25	b	17b	Case 17b with an ID repair (WRS w/o SS weld)	WRS *from* w/o SS weld *to* ID repair w/o SS weld	35	68	1.71	2.05	69.28	91.86
26	a	18a	Case 18a with an ID repair (WRS w/ SS weld)	WRS *from* w/ SS weld *to* ID repair w/ SS weld	*arrest*	>>40	*arrest*	2.83	*arrest*	5.40 (note 1)
27	b	17b	Case 17b with intermediate bending moment	Pb *from* 13.57 ksi *to* 13.00 ksi	35	38	1.71	1.74	69.28	70.43
28	b	17b	Case 17b with low bending moment	Pb *from* 13.57 ksi *to* 10.00 ksi	35	27	1.71	1.67	69.28	28.75
29	b	18b	Case 18b with high bending moment	Pb *from* 4.88 ksi *to* 7.00 ksi	43	11	1.79	1.38	15.79	8.49
30	b	18b	Case 18b with low bending moment	Pb *from* 4.88 ksi *to* 4.03 ksi	43	*arrest*	1.79	*arrest*	15.79	*arrest*
31	c	1c	Case 1c with 10% greater thickness	Thickness *from* 1.29 in *to* 1.419 in	109	146	2.24	2.46	5.81	6.43
32	c	1c	Case 1c with 10% lesser thickness	Thickness *from* 1.29 in *to* 1.161 in	109	74	2.24	1.96	5.81	4.80
33	c	4c	Case 4c with low axial membrane stiffness	Pm *from* 1.90 ksi *to* 1.64 ksi	112	123	2.18	2.20	5.22	5.27
34	c	4c	Case 4c with high axial membrane stiffness	Pm *from* 1.90 ksi *to* 2.15 ksi	112	98	2.18	2.12	5.22	5.52
35	c	6c	Case 6c with shortened weld length	Weld Length *from* 1 in *to* 0.5 in	41	32	1.70	1.62	4.04	3.67

Note 1: Results not specific for a Stability Margin Factor of 1.2; case has Stability Margin Factor >> 1.2 when time > 40 days

© 2008 Electric Power Research Institute, Inc. All rights reserved.

Matrix Results
Sensitivity Summary (cont'd)

Case #	WRS Subcase	Base Case	Qualitative Sensitivity Description	Quantitative Sensitivity Description	Result Comparison: Time Interval from 1 gpm to a Stability Margin Factor of 1.2 [days]		Stability Margin Factor at 1 gpm (or at initial leak rate if higher)		Calculated Leak Rate (at 70°F) at a Stability Margin Factor of 1.2 [gpm]	
					from	*to*	*from*	*to*	*from*	*to*
36	c	6c	Case 6c modeled with plastic redistribution (modified WRS)	WRS *from* ASME 3/30 fit *to* plastic redistribution	41	42	1.70	1.69	4.04	3.99
37	c	6c	Case 6c with natural shape initial surface flaw	Initial Surface Flaw *from* Uniform, 10% TW 360° *to* 21:1, 26% TW, natural shape partial-arc	41	49	1.70	1.83	4.04	4.97
38	c	6c	Case 6c with semi-ellipse initial surface flaw	Initial Surface Flaw *from* Uniform, 10% TW 360° *to* 21:1, 26% TW, semi-ellipse partial-arc	41	49	1.70	1.83	4.04	4.98
39	c	6c	Case 6c with constant depth initial surface flaw	Initial Surface Flaw *from* Uniform, 10% TW 360° *to* 21:1, 26% TW, constant depth partial-arc	41	47	1.70	1.81	4.04	4.87
40	c	6c	Case 6c with shallow initial surface flaw	Initial Surface Flaw *from* Uniform, 10% TW 360° *to* 21:1, 15% TW, natural shape partial-arc	41	53	1.70	1.89	4.04	5.18
41	c	6c	Case 6c with deep initial surface flaw	Initial Surface Flaw *from* Uniform, 10% TW 360° *to* 21:1, 40% TW, natural shape partial-arc	41	44	1.70	1.77	4.04	4.70
42	c	6c	Case 6c with low crack growth exponent	CGR Exponent *from* 1.6 *to* 1.0	41	39	1.70	1.57	4.04	2.97
43	c	6c	Case 6c with high crack growth exponent	CGR Exponent *from* 1.6 *to* 2.2	41	47	1.70	1.84	4.04	4.84
44	c	12c	Case 12c with low crack growth exponent	CGR Exponent *from* 1.6 *to* 1.0	48	37	1.86	1.69	3.54	2.64
45	c	12c	Case 12c with high crack growth exponent	CGR Exponent *from* 1.6 *to* 2.2	48	46	1.86	1.91	3.54	3.86
46	b	17b	Case 17b with low crack growth exponent	CGR Exponent *from* 1.6 *to* 1.0	35	73	1.71	1.71	69.28	73.58
47	b	17b	Case 17b with high crack growth exponent	CGR Exponent *from* 1.6 *to* 2.2	35	22	1.71	1.70	69.28	63.34
48	b	17b	Case 17b with reduced crack front pressure	Crack Front Pressure *from* 2235 psi *to* 1330 psi	35	39	1.71	1.73	69.28	70.05
49	c	6c	Case 6c without thermal loads for TW crack	Pm *from* 2.34 ksi *to* 2.46 ksi; Pb *from* 7.63 ksi *to* 0.94 ksi	41	145	1.70	2.85	4.04	8.57
50	b	17b	Case 17b without thermal loads for TW crack	Pm *from* 3.72 ksi *to* 3.71 ksi; Pb *from* 13.57 ksi *to* 0.79 ksi	35	293	1.71	4.33	69.28	191.43
51	b	19b	Case 19b without thermal loads for TW crack	Pm *from* 3.45 ksi *to* 3.36 ksi; Pb *from* 14.55 ksi *to* 0.90 ksi	*arrest*	*arrest*	*arrest*	*arrest*	*arrest*	*arrest*
52	c	1c	Case 1c with detailed nozzle-to-safe end geometry	Geometry *from* cylinder *to* detailed nozzle-to-safe end	109	94	2.24	2.26	5.81	6.61
52	d	1b	Case 1b with detailed nozzle-to-safe end geometry and direct FEA WRS interpolation	Geometry *from* cylinder *to* detailed nozzle-to-safe end; WRS *from* thermal simulation *to* direct FEA interpolation	*arrest*	*arrest*	*arrest*	*arrest*	*arrest*	*arrest*
53	b	17b	Case 17b with detailed nozzle-to-safe end geometry	Geometry *from* cylinder *to* detailed nozzle-to-safe end	35	49	1.71	1.69	69.28	42.35
S1	a	17a	Case 17a with 360° initial surface flaw	Initial Surface Flaw *from* 21:1, 26% TW, natural shape partial-arc *to* Uniform, 10% TW 360°	*arrest*	*arrest*	*arrest*	*arrest*	*arrest*	*arrest*
S1	b	17b	Case 17b with 360° initial surface flaw	Initial Surface Flaw *from* 21:1, 26% TW, natural shape partial-arc *to* Uniform, 10% TW 360°	35	*not applicable*	1.71	1.03	69.28	*not applicable*
S2	b	17b	Case 17b with 360° initial surface flaw and low bending moment	Initial Surface Flaw *from* 21:1, 26% TW, natural shape partial-arc *to* Uniform, 10% TW 360°; Pb *from* 13.57 ksi *to* 8.40 ksi	35	4	1.71	1.28	69.28	6.00
S3	b	17b	Case 17b with short crack length initial surface flaw	Initial Surface Flaw *from* 21:1, 26% TW, natural shape partial-arc *to* 5.6:1, 10% TW, natural shape partial-arc	35	74	1.71	2.03	69.28	87.49
S4	b	17b	Case 17b with additional crack flaw at position 1	after 7 days of leakage w/ additional 21:1 partial-arc crack at position 1 (Fig. 7-14)	35	*not applicable*	1.65 (note 2)	1.43 (note 2)	69.28	*not applicable*
S5	b	17b	Case 17b with additional crack flaw at position 2	after 7 days of leakage w/ additional 21:1 partial-arc crack at position 2 (Fig. 7-14)	35	*not applicable*	1.65 (note 2)	1.48 (note 2)	69.28	*not applicable*
S6	b	17b	Case 17b with additional crack flaw at position 3	after 7 days of leakage w/ additional 21:1 partial-arc crack at position 3 (Fig. 7-14)	35	*not applicable*	1.65 (note 2)	1.29 (note 2)	69.28	*not applicable*
S7	b	17b	Case 17b with additional limiting crack	after 7 days of leakage w/ additional limiting partial-arc crack at 95% TW (Fig. 7-14)	35	*not applicable*	1.65 (note 2)	1.44 (note 2)	69.28	*not applicable*
S8	b	19b	Case 19b with 360° initial surface flaw	Initial Surface Flaw *from* 21:1, 26% TW, natural shape partial-arc *to* Uniform, 10% TW 360°	*arrest*	*arrest*	*arrest*	*arrest*	*arrest*	*arrest*
S9	b	17b	Case 17b with additional crack flaw at bottom of weld	Number of Initial Flaws *from* single 21:1 partial-arc crack at top of weld *to* 21:1 partial-arc cracks at top and bottom of weld (Fig. 7-15)	35	29	1.71	1.60	69.28	69.28

Note 2: Stability Margin Factor after 7 days of leakage

© 2008 Electric Power Research Institute, Inc. All rights reserved.

Analysis Matrix Results
Multiple Crack Cases

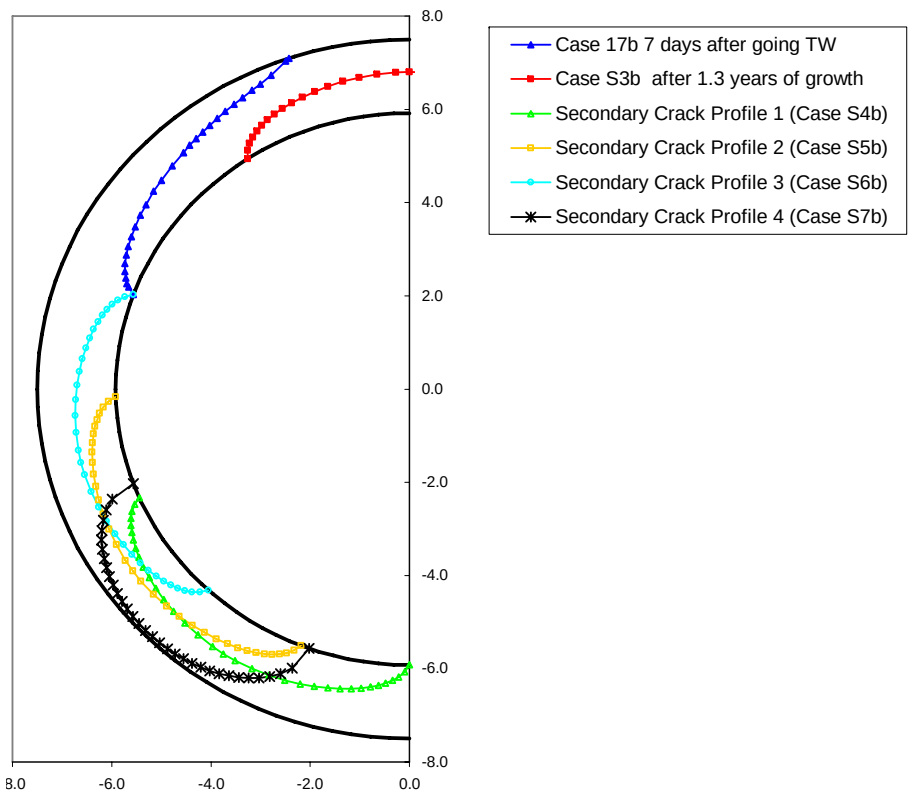

Profiles of Pairs of Additional Cracks Applied in Stability Calculations for Cases S4b through S7b Based on Case 17b

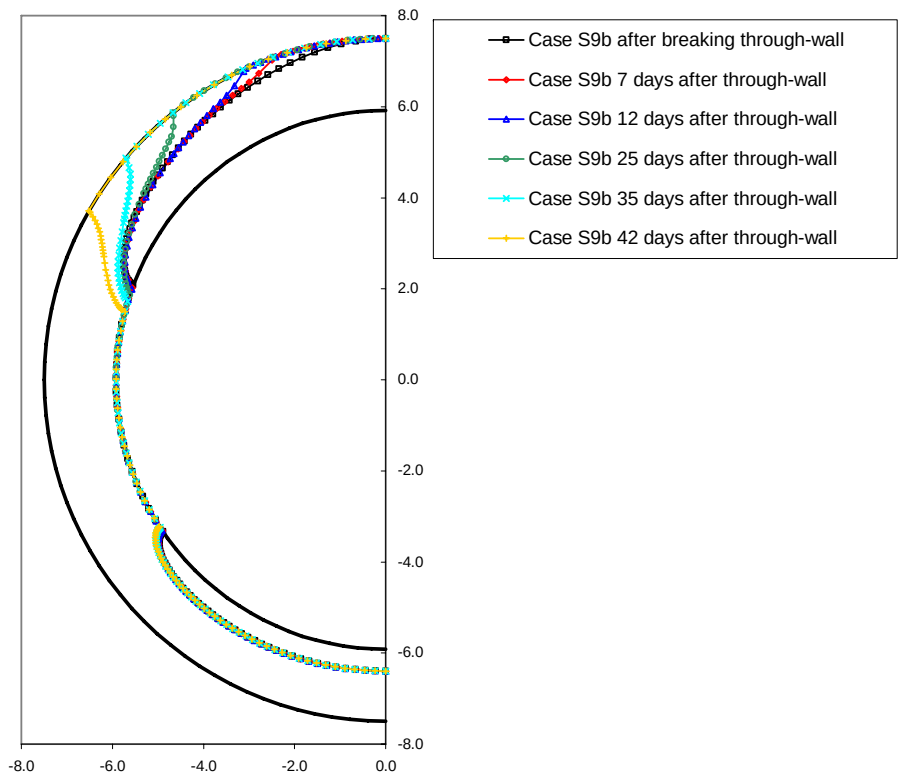

Case S9b Growth Progression Based on Individual Growth of Initial 21:1 Aspect Ratio 26% through-wall Flaws Placed at Top and Bottom of Weld Cross Section

© 2008 Electric Power Research Institute, Inc. All rights reserved.

ELECTRIC POWER RESEARCH INSTITUTE

Analysis Matrix Results
Summary

- All 109 completed cases in the main sensitivity matrix showed either
  - stable crack arrest (60 cases), or
  - crack leakage and crack stability results satisfying the evaluation criteria (49 cases)
  - generally considerable margins beyond evaluation criteria
- 10 supplemental cases further investigated the effect of multiple flaws on limiting surge nozzle cases
  - Conservative application of the three Wolf Creek surge nozzle indications with limiting surge nozzles (fill-in weld and relatively high moment load) gives results meeting the evaluation criteria with additional margin
  - A case with two long initial partial-arc flaws covering 46% of the ID circumference as opposed to a single initial flaw covering half this circumferential extent (and centered at the location of maximum axial bending stress) has only a modest effect on crack stability
  - On this basis, it is concluded that the concern for multiple flaws in the limiting surge nozzles is adequately addressed by cases that satisfy the evaluation criteria with additional margin

© 2008 Electric Power Research Institute, Inc. All rights reserved.

Analysis Matrix Results
Summary (cont'd)

- Relaxation of secondary loads with crack extension is a significant source of conservatism in the most limiting matrix results
  - A reduction in the secondary load of 40% or more results in the most limiting case (S1b) satisfying the evaluation criteria, even given the assumption of an initial 360° 10%tw flaw
  - This degree of secondary load reduction is supported by the detailed secondary load studies performed (Appendices B and C)
  - Case S1b addresses the most limiting surge nozzles (relatively high secondary moment load and presence of thermal sleeve fill-in weld) and assumes an initial 360° 10%tw flaw (37 inches long)
- Other sources of conservatism for Case S1b:
  - Welding residual stresses (WRS) modeled as axisymmetric
  - WRS does not credit benefit of stainless steel field weld
  - Flow stress in crack stability model based on stainless steel safe end material even though worst case WRS is in the butter area

© 2008 Electric Power Research Institute, Inc. All rights reserved.

Conclusions

- Assumption of semi-elliptical flaw shape shown to result in large unnecessary overconservatism
- All 51 subject welds are adequately covered by crack growth sensitivity cases that satisfy the evaluation criteria
- Results show tendency of circumferential surface cracks to show stable arrest
  - Axisymmetric welding residual stress profile must self-balance
  - Consistent with Wolf Creek experience given unlikeliness that four indications found in narrow depth band were growing rapidly at that time
- Sensitivity cases indicate a large beneficial effect of relaxation of secondary loads upon through-wall penetration
  - Detailed evaluations tend to support such a relaxation effect
  - Not fully credited in main cases

© 2008 Electric Power Research Institute, Inc. All rights reserved.

Conclusions (cont'd)

- In summary, this study demonstrates the viability of leak detection to preclude the potential for rupture for the pressurizer nozzle DM welds in the group of subject PWRs
- The detailed report documenting this work was published in August 2007 as EPRI 1015400 (MRP-216 Rev. 1), which is publicly available
- DEI, Quest Reliability, and EPRI plan to submit a paper to a refereed scientific journal on this topic

© 2008 Electric Power Research Institute, Inc. All rights reserved.