Accurate Critical Crack Size Calculations in DM Welds

Engineering Mechanics Corporation of Columbus

Presented by
Do-Jun Shim

Prepared by
G. Wilkowski, D.-J. Shim, F. Brust, and D. Rudland

Workshop on LBB in PWSCC Systems
January 9-11 2008
Hilton Washington DC/Rockville, Executive Meeting Center

djshim@emc-sq.com

Emc²
Innovative Structural Integrity Solutions

Contents

- ***Background on NSC equations (Limit-load analysis)***
- ***Considerations in limit-load analysis***
  - Limits, screening criterion, flow stress, etc.
- ***EPFM analysis***
  - J-estimation schemes, Z-factor approach
  - TWC, surface crack, complex crack
  - Cracks in DMW
- ***Effect of secondary stress on critical crack size***
- ***Summary***

Development of NSC Equations

- ***Original development in EPRI NP-192***
  - ***Thin-shell equation, used as technical basis for ASME Section XI pipe flaw evaluation criterion***
  - ***Simple method that says failure occurs when the net-section of the pipe becomes fully plastic***
    - ***Stresses above and below the neutral axis of the pipe reach an empirical value of "flow stress" that is somewhere between yield and ultimate.***
    - ***Pipe toughness has to be very high for this to occur.***
    - ***One of many limit-load analyses for circumferentially cracked pipes.***

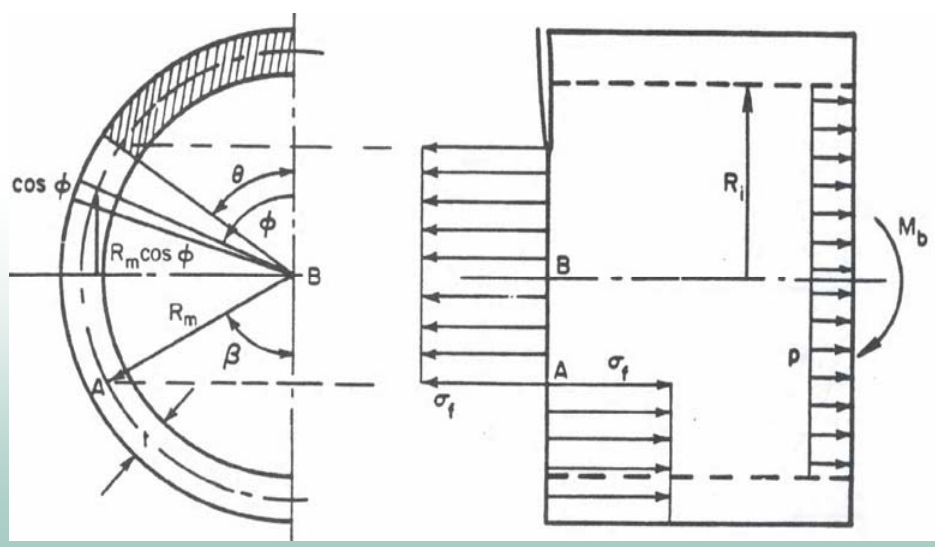

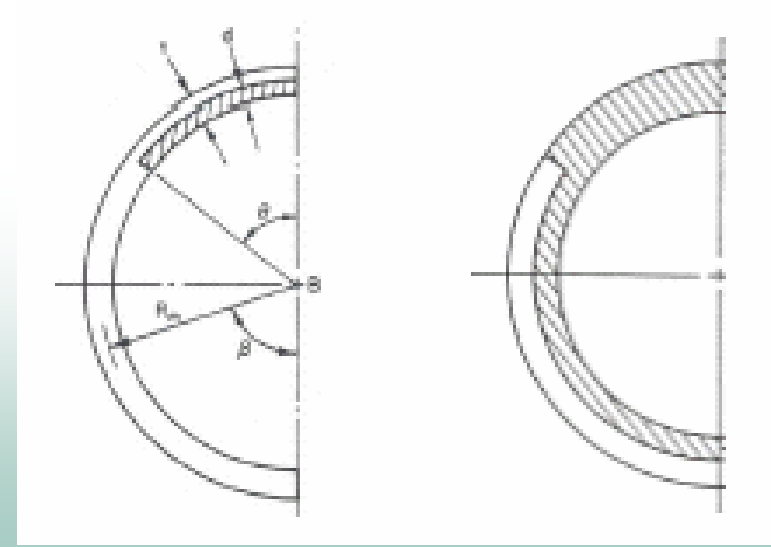

Other Consideration in Limit-Load Analyses

- ***Limitation on the Net-Section-Collapse Analysis for Deep Cracks***
  - ***ASME Code limits surface flaw evaluations to a/t < 0.75***
  - ***JAERI/Kurihara experiments show original NSC solutions over predict failure stresses for deeper cracks – good reason for ASME limit!***

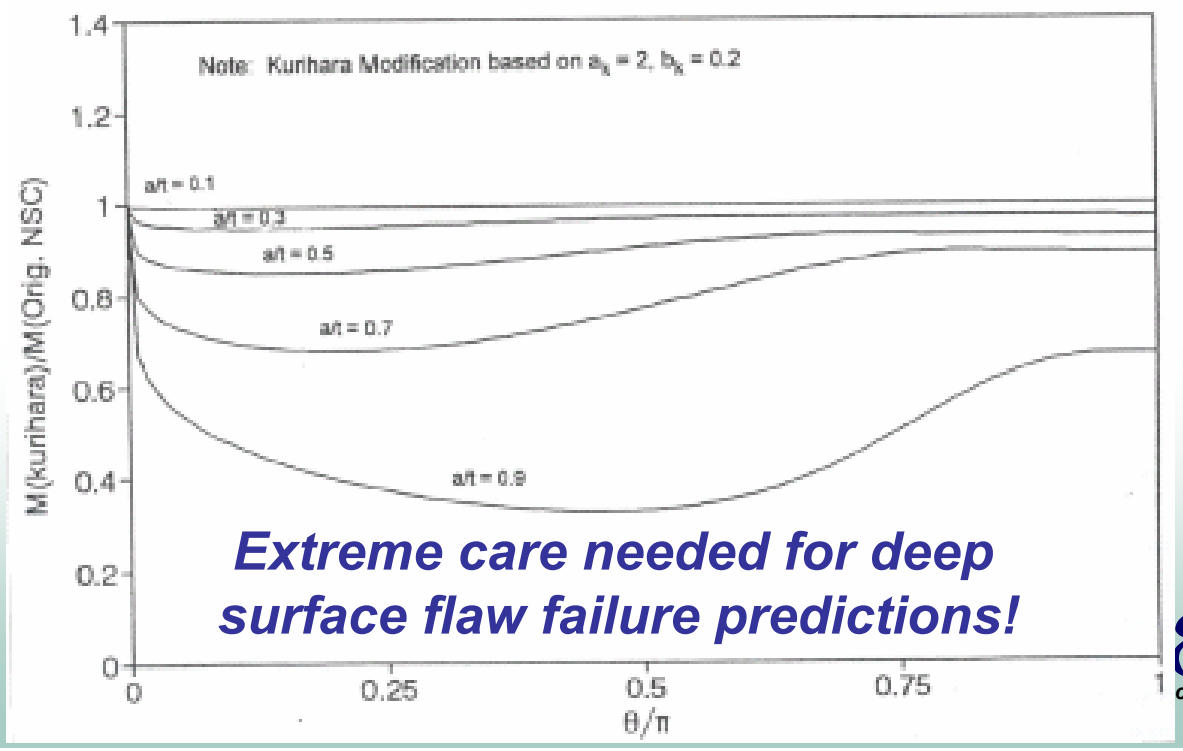

Extreme care needed for deep surface flaw failure predictions!

Screening Criterion for Limit-Load Conditions

- ***FAD curve (in ASME Code)***
- ***Dimensionless Plastic Zone Parameter (DPZP) empirical approach***

  - ***Based on the size of the plastic zone relative to pipe size***
  - ***For TWC, fully plastic conditions satisfied if DPZP > 1.0 - Using C(T) specimen J values.***
  - ***Apparent toughness of surface-cracked pipe is about 4 times greater than through-wall cracked pipe.***
  - ***For SC, limit-load conditions reached if DPZP > 0.25***
  - ***DPZP approach inherently includes constraint effects***

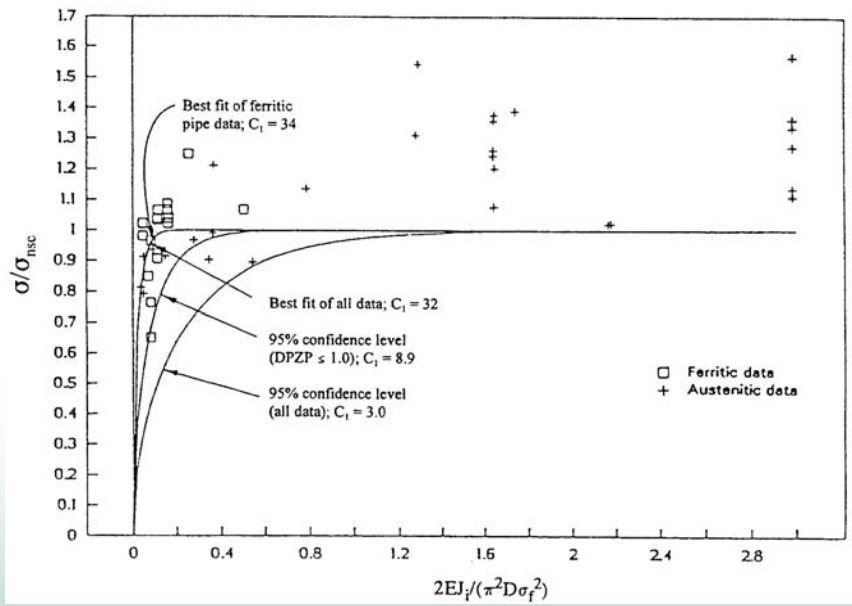

Definition of Flow Stress for Limit-Load Analysis of Cracks in Girth Welds

- ***Comparison of <u>TWC</u> pipe tests with cracks <u>in welds</u>***
  - ***Flow stress defined as average of actual yield and ultimate strength of either base metal or weld metal (same base metal on both sides of weld)***
  - ***Used only data that satisfied DPZP screening criterion where limit-load should be applicable.***
  - ***Used only tests with significant difference in weld and base metal strength***

- ***Using weld metal strength over predicted experimental maximum loads by 17% on the average***
- ***Using base metal strength,***
  - ***Exp/Predicted = 1.02***
  - ***Coefficient of Variance = 13%***

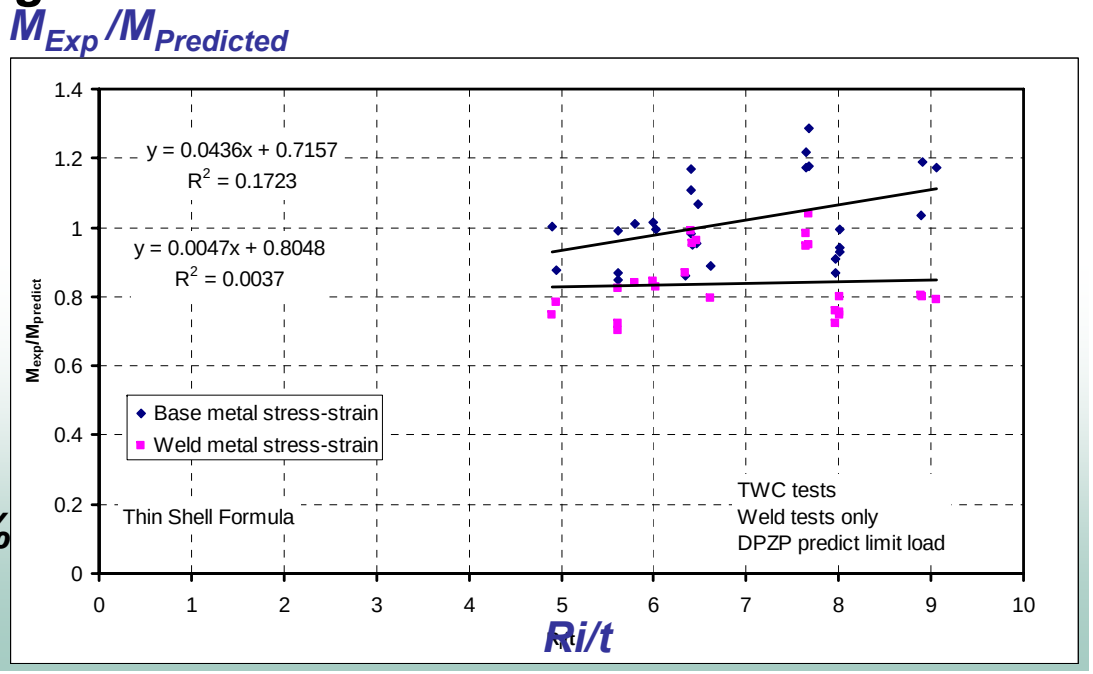

EPFM Analysis – When is it needed?

- ***There can be many combinations of material toughness, pipe diameter, and crack type or size that will produce a maximum load-carrying capacity that is less than that predicted by limit-load analyses.***

- ***To predict that fracture behavior, elastic-plastic fracture mechanics (EPFM) analyses are needed.***

Idealized Through-Wall-Cracked Pipe EPFM Analyses – J-Estimation Schemes

- ***J-estimation schemes are simplified EPFM analyses***
  - ***GE/EPRI – influence functions from FE solutions***
  - ***LBB.ENG2 – analytical basis – predict load-displacement (or moment-rotation) behavior and integrate area to calculate J***
  - ***Both based on homogeneous material, i.e., no welds***
- ***Experimental comparisons with TWC in base metal showed GE/EPRI was most conservative and LBB.ENG2 was the most accurate***

Idealized Through-Wall-Cracked Pipe EPFM Analyses – Crack in Weld

- ***Comparisons made with TWC pipe tests and 5 different J-estimation schemes using either base metal or weld metal stress-strain curves with weld J-R curve [from C(T) specimens]***
  - ***28-inch diameter TP304 with TWC in center of weld***
  - ***Weld metal strength drastically over predicted experimental maximum loads, where as base metal strength showed reasonable predictions – similar to limit-load weld tests***

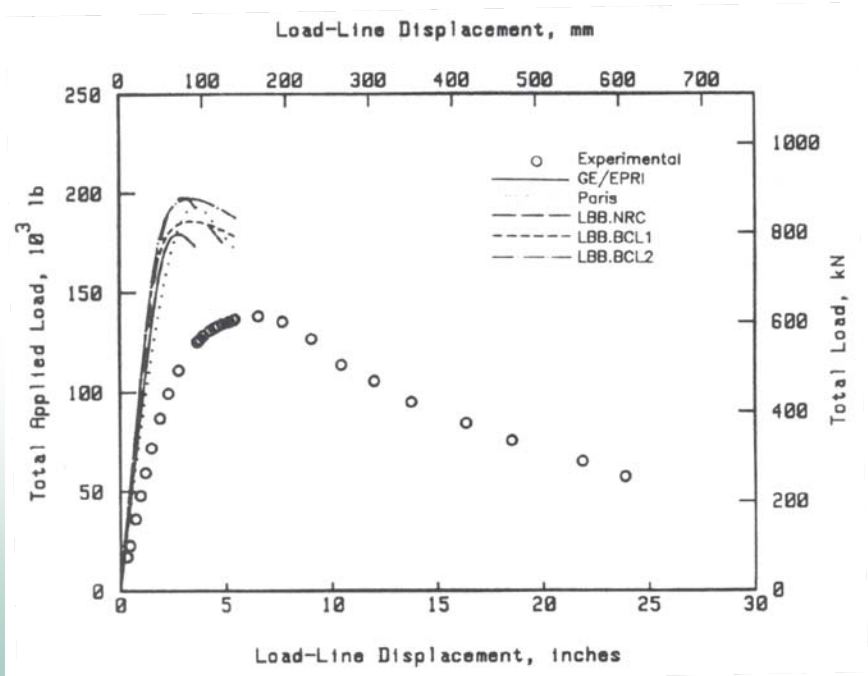

Weld metal stress-strain curve and J_M-R curve

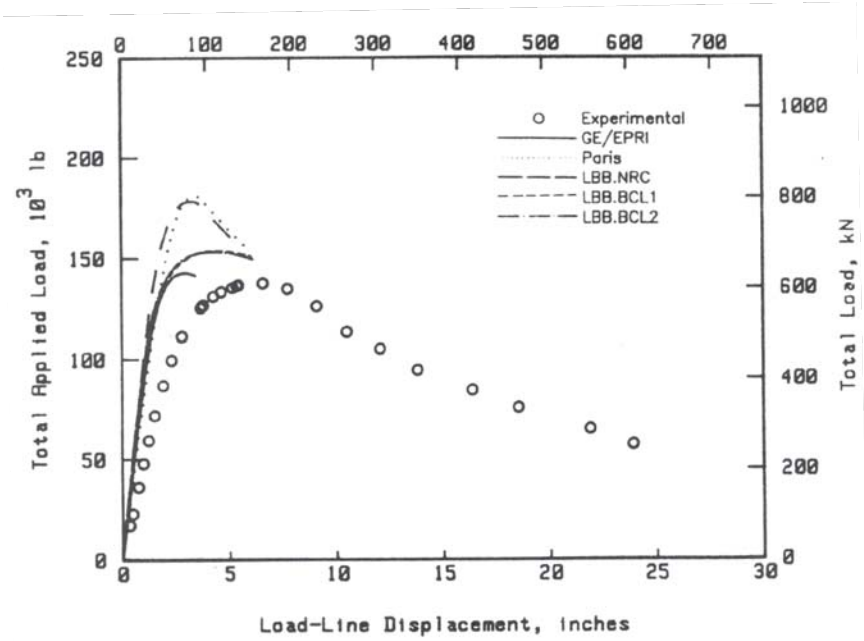

Base metal stress-strain curve and J_M-R curve

Idealized Through-Wall-Cracked Pipe EPFM Analyses – Z-Factor Approach

- ***Z-factor approach is simple ASME Code approach to account for EPFM***
  - ***Based on past GE/EPRI TWC analyses – f(D, toughness)***
  - ***Z = NSC/(GE-EPRI predicted maximum loads with base metal stress-strain curve and weld metal J-R curve)***
  - ***For a particular pipe diameter Z-factor was calculated***
  - ***Applied for SC pipe even though developed from TWC analyses***

Idealized TWC in DMW

- ***DWM case has base metals with significantly different strengths on opposite sides – different than all but one past pipe fracture test***
  - ***Which base metal strength to be used in LBB.ENG2 (and limit-load analyses)?***
  - ***Conducted FE analyses in Emc² Wolf Creek scoping analysis - 2007 PVP paper***
    - ***If crack in center of weld, then effective strength was ¼ of way closer to TP304 than A508***
    - ***If crack closer to safe end, use TP304***
    - ***If crack close to nozzle, then use average of two base metals***
  - ***If crack location not known use TP304 strength***

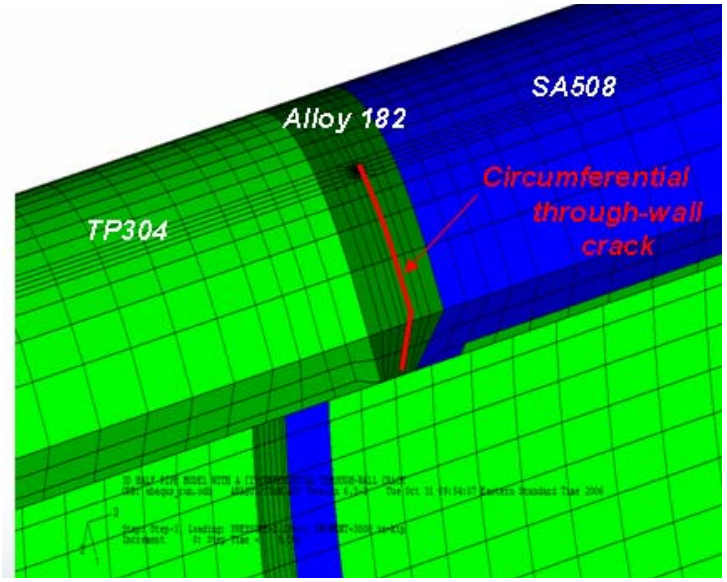

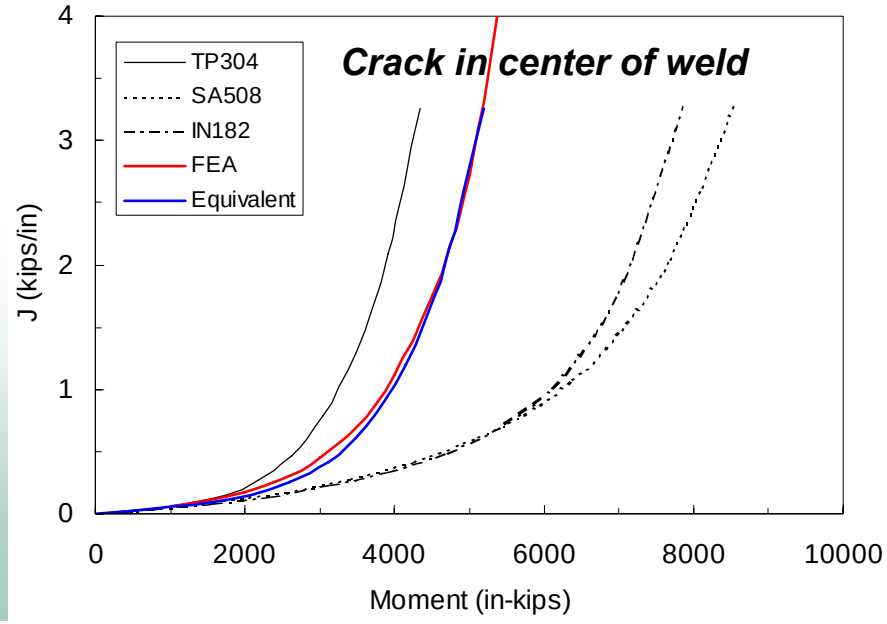

Z-factor for TWC in Alloy 182 DMW

- *Used stainless steel strength (assumed crack location not known) and Alloy 182 J-R curve*
- *Used LBB.ENG2 - More accurate than GE/EPRI method*
- *Alloy182 Z-factor much smaller than ASME Z-factors (due to high toughness of Alloy 182)*

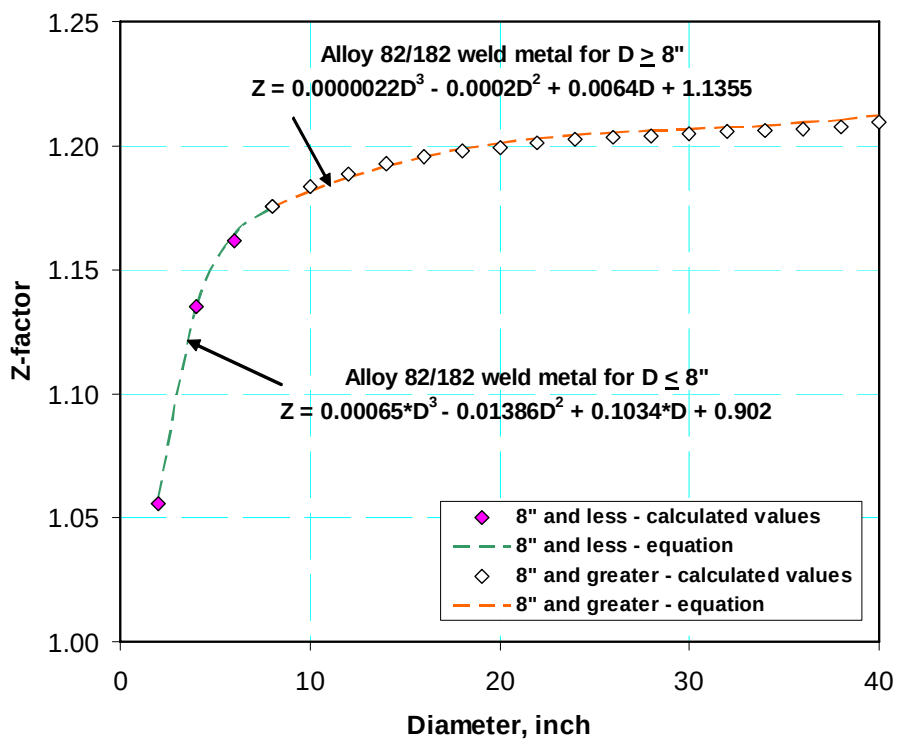

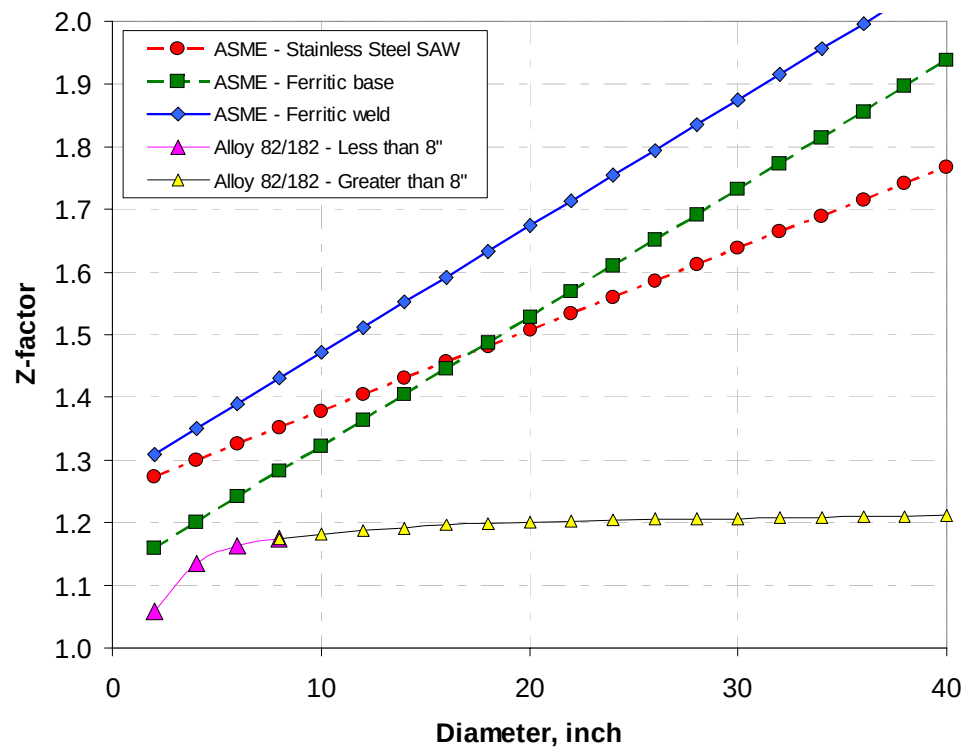

Pipe Test with Through-Wall-Cracked in a DMW

- ***From NUREG/CR-6297 NRC's "Short Cracks in Piping and Piping Welds Program***
  - ***Alloy 182 weld made by CE, between TP304 safe end and A516 Gr70 ferritic pipe (much lower strength than A508 nozzle material)***
  - ***TWC in fusion line of 36" OD by 3" thick cold leg from cancelled CE plant***

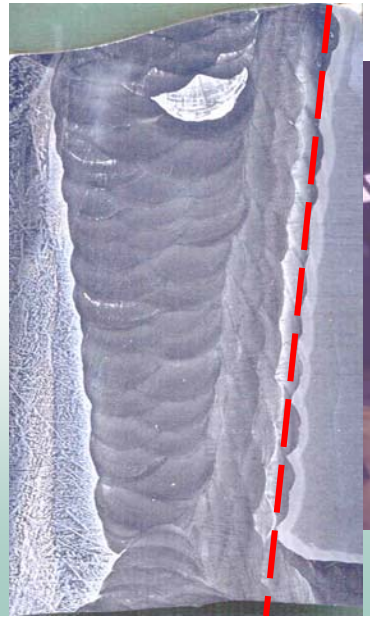

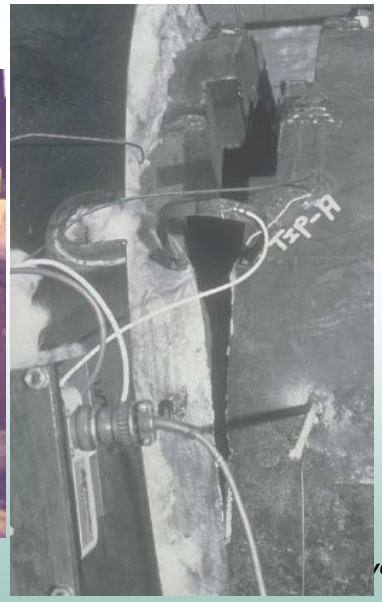

Comparisons of Z-factors – Fusion line versus closer to stainless steel safe end

- ***Z-factor for ferritic fusion-line case was 1.18 (highest effective stress-strain curve).***
  - ***Fusion line test Z-factor slightly lower (98%) than case with crack closer to stainless steel base metal)***
  - ***Hence Z-factor not as sensitive to crack location as stress-strain curve***

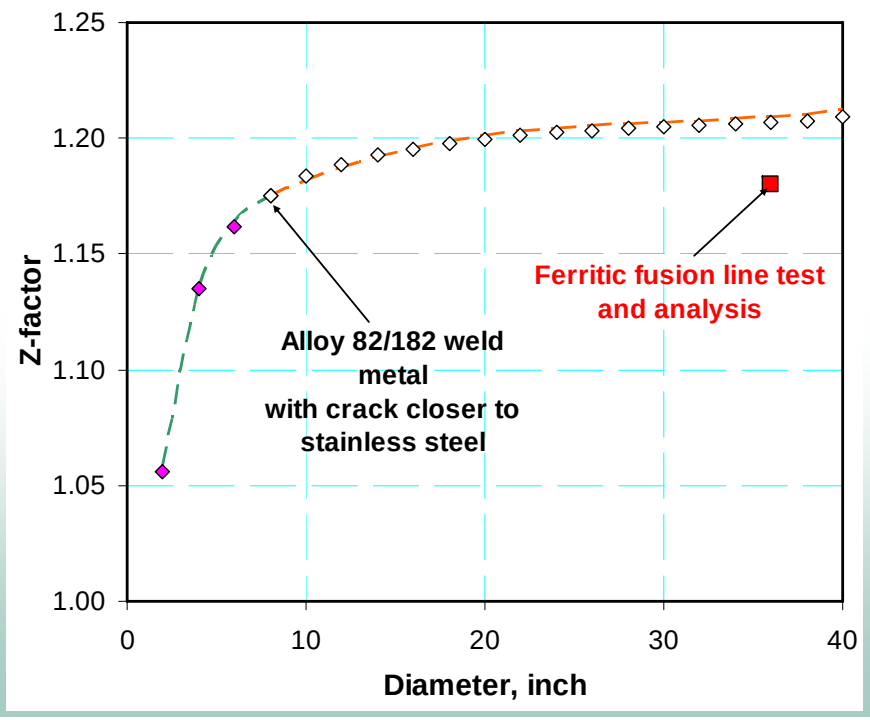

Surface-Cracked Pipe EPFM Analyses

- *Toughness from C(T) specimen underpredicts apparent toughness from surface cracked pipe – SENT may predict reasonable toughness*
- *SC.TNP1 J-estimation scheme made best predictions with experimental result when using C(T) specimen J-R curve – Error in driving force compensates for apparent toughness*
- *SC.TNP1 predictions for surface cracks in DMW showed that limit-load analysis is appropriate (Wolf Creek Scoping Analysis)*
- *As with TWC, difficulty in applying SC.TNP1 analysis to DMW is determining what stress-strain curve to use.*

Surface-Cracked Pipe EPFM Analyses (cont'd)

- ***Failure mode may be closer to limit-load. Possible procedure to assess this:***
  - ***For DMW with surface cracks, also need to know the effective stress-strain curve that should be used.***
  - ***Check past surface-cracked pipe tests with cracks in center of weld for accuracy of FE and J-estimation schemes to predict maximum load with SENT specimen J-R curves.***
  - ***Conduct analyses for DMW using SENT specimen J-R curve and proper effective stress-strain curve to determine if limit-load met, and what stress-strain curve should be used in limit-load analysis.***

Complex-Cracked Pipe EPFM Analyses

- ***Apparent full-scale toughness for complex-cracked pipe is much lower than TWC.***
  - ***Could calculate Z-factor for CC'ed pipe using experimental constraint factor and LBB.ENG2 analysis option (reduced thickness for SC in ligament) – Much higher than TWC Z-factor***

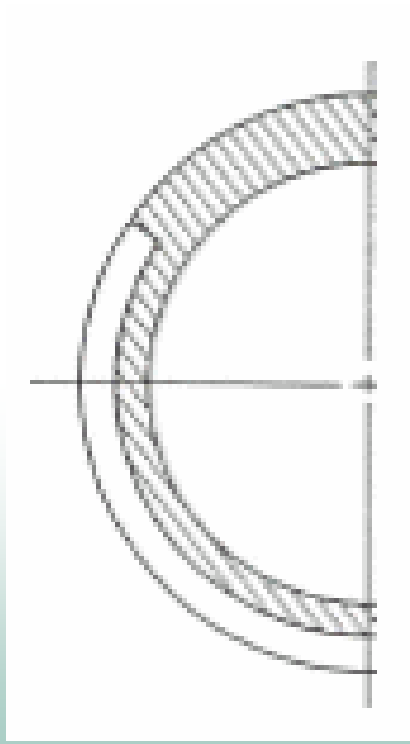

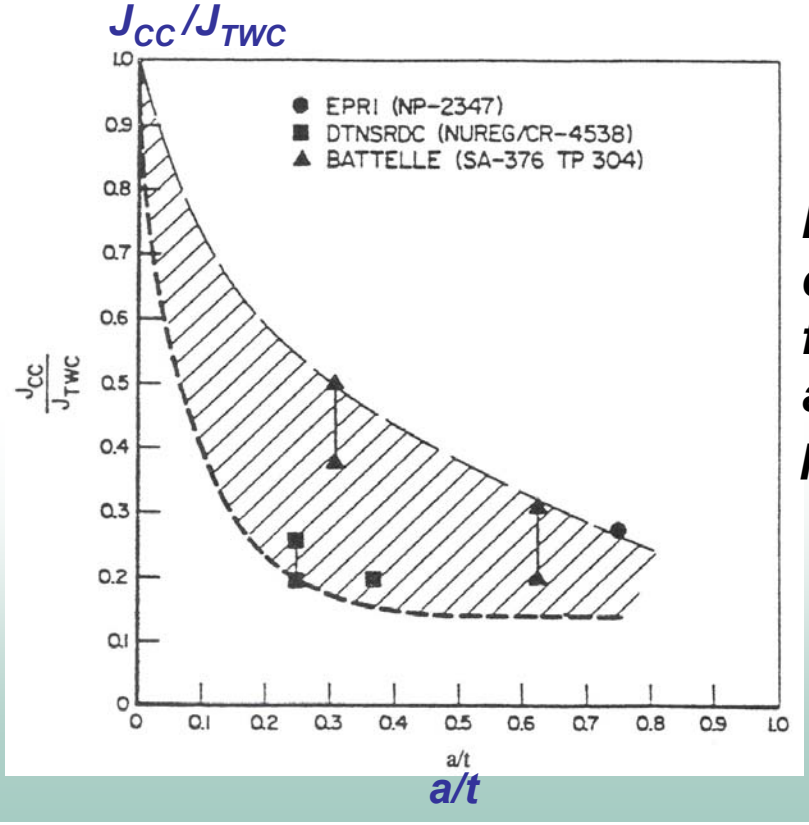

Based on toughness calculations directly from idealized TWC and complex-cracked pipe tests

Complex-Cracked Pipe EPFM Analyses (cont'd)

- *Tearing resistance so low, that displacement-controlled (secondary stress) instability can occur with relatively short pipe length*
- *When long surface cracks starts to fail, the initial growth through the thickness results with formation of complex crack, so DEGB can occur in pipe with long SC's*
- *DMW complex crack experiments needed – No data to date!!*

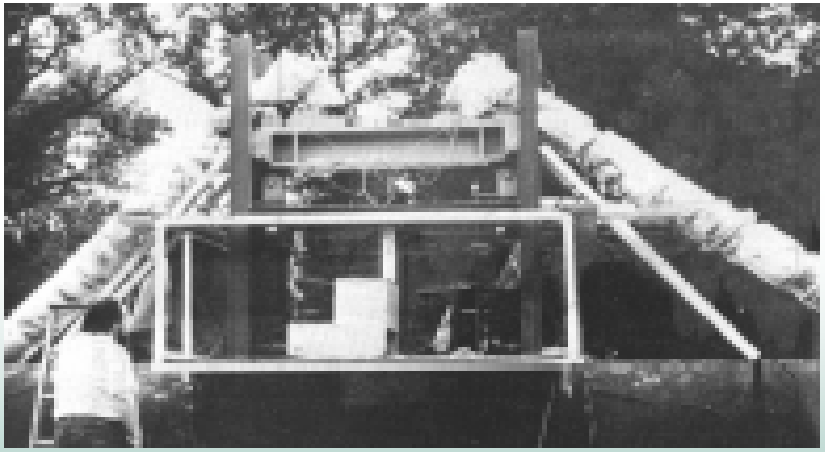

Complex-cracked pipe test

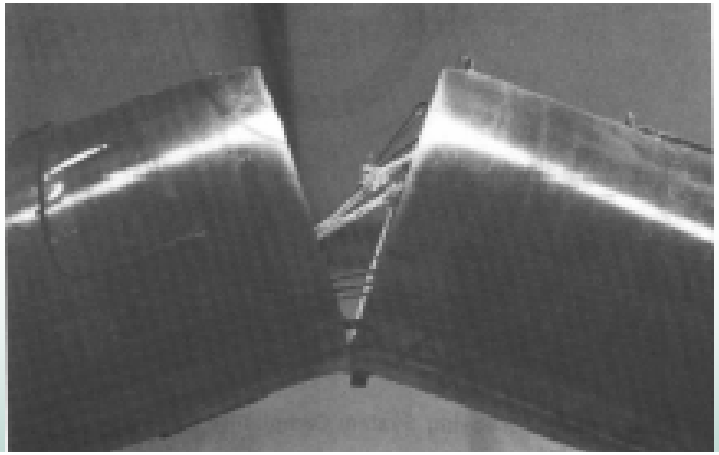

Long surface-cracked pipe test

Secondary Stresses and Critical Crack Assessment

- ***IPIRG and BINP projects conducted pipe system tests on 16-inch diameter pipe loop (~100 feet length), with circumferential surface crack in center of stainless submerged arc weld.***

- ***The tests were conducted with subcooled water in the pipe at 550F and 2,250 psig.***
- ***Thermal expansion stresses artificially changed.***
- ***Maximum loads with all stress the same – thermal expansion stresses acted like primary stress***

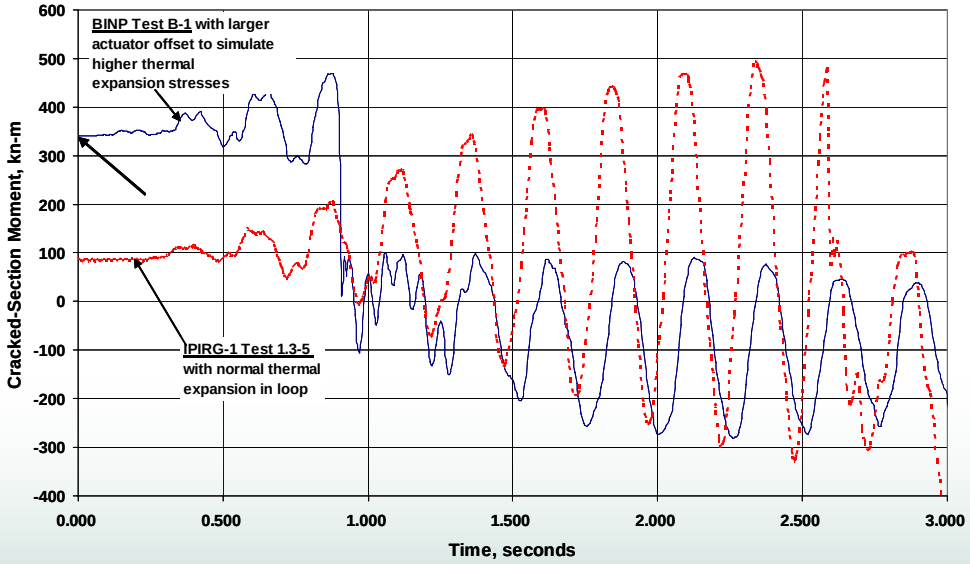

Secondary Stresses and Critical Crack Assessment (cont'd)

- ***Why did these pipe system tests have secondary stresses act like primary stresses?***
  - ***Surface flaw ($a/t \approx 0.65$ and $\theta/\pi \approx 0.5$) was large enough that failure caused stresses in unflawed pipe to be below yield***
  - ***Plasticity at crack section (rotation) was much smaller than displacements/rotation due to thermal expansion***

- ***For large cracks, secondary stresses should be treated as primary stresses – consistent with "Local Overstrain" warning in NC-3672.6, ND-3672.6, and B31.1 of Section III of the ASME Code***

- ***More experiments employing secondary stress are needed!***

Summary

- ***Extensive analyses conducted for idealized circumferential through-wall cracks in DMW – Appropriate stress-strain curve needed***

- ***For circumferential surface-crack in DMW, additional evaluations are needed to demonstrate if limit-load analyses is appropriate, and determine appropriate stress-strain curve.***

- ***The complex-crack geometry case is the most severe from a constraint viewpoint in reducing the material toughness (based on past full-scale pipe tests).***

- ***Secondary stresses can be as important if the flaw is large enough that failure would be below yield of the unflawed piping material***

- ***There is a lack of full-scale validation test data for DMW flaws.***