DESIGN CONTROL DOCUMENT FOR THE
US-APWR
Chapter 6
Engineered Safety Features

MUAP- DC006

REVISION 0

DECEMBER 2007

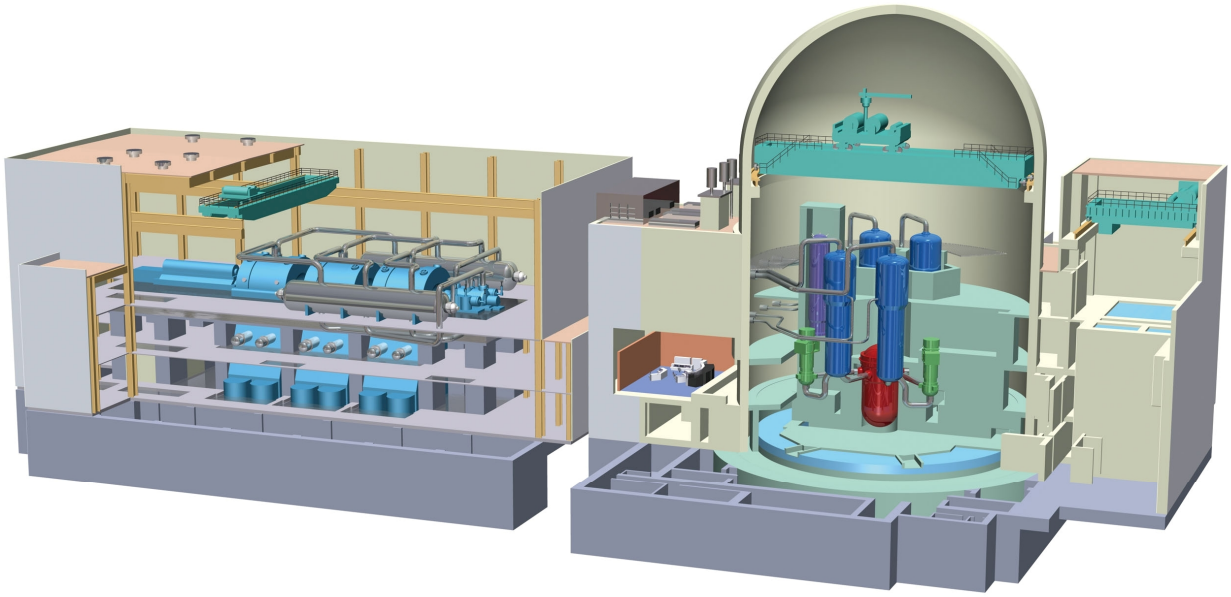

MITSUBISHI HEAVY INDUSTRIES, LTD.

©2007
Mitsubishi Heavy Industries, Ltd.
All Rights Reserved

© 2007

MITSUBISHI HEAVY INDUSTRIES, LTD.

All Rights Reserved

This document has been prepared by Mitsubishi Heavy Industries, Ltd. ("MHI") in connection with the U.S. Nuclear Regulatory Commission's ("NRC") licensing review of MHI's US-APWR nuclear power plant design. No right to disclose, use or copy any of the information in this document, other that by the NRC and its contractors in support of the licensing review of the US-APWR, is authorized without the express written permission of MHI.

This document contains technology information and intellectual property relating to the US-APWR and it is delivered to the NRC on the express condition that it not be disclosed, copied or reproduced in whole or in part, or used for the benefit of anyone other than MHI without the express written permission of MHI, except as set forth in the previous paragraph.

This document is protected by the laws of Japan, U.S. copyright law, international treaties and conventions, and the applicable laws of any country where it is being used.

Mitsubishi Heavy Industries, Ltd.

16-5, Konan 2-chome, Minato-ku

Tokyo 108-8215 Japan

CONTENTS

Page

6.0 Engineered Safety Features 6.0-1

6.0.1 Engineered Safety Feature Material 6.0-2

6.0.2 Containment Systems 6.0-2

6.0.3 Emergency Core Cooling Systems 6.0-3

6.0.4 Habitability Systems 6.0-3

6.0.5 Fission Product Removal and Control Systems 6.0-3

6.0.6 Inservice Inspection of Class 2 and Class 3 Components 6.0-4

6.0.7 Combined License Information 6.0-4

6.0.8 References 6.0-4

6.1 Engineering Safety Feature Materials 6.1-1

6.1.1 Metallic Materials 6.1-1

6.1.1.1 Materials Selection and Fabrication 6.1-1

6.1.1.2 Composition and Compatibility of Core Cooling Coolants and Containment Sprays 6.1-3

6.1.2 Organic Materials 6.1-5

6.1.3 Combined License Information 6.1-5

6.1.4 References 6.1-6

6.2 Containment Systems 6.2-1

6.2.1 Containment Functional Design 6.2-1

6.2.1.1 Containment Structure 6.2-2

6.2.1.2 Containment Subcompartments 6.2-17

6.2.1.3 Mass and Energy Release Analysis for Postulated Loss-of-Coolant Accidents 6.2-22

6.2.1.4 Mass and Energy Release Analysis for Postulated Secondary-System Pipe Ruptures Inside Containment 6.2-26

6.2.1.5 Minimum Containment Pressure Analysis for Performance Capability Studies of the Emergency Core Cooling System 6.2-35

6.2.1.6 Testing and Inspection 6.2-38

6.2.1.7 Instrumentation Requirements 6.2-39

6.2.2 Containment Heat Removal Systems 6.2-41

6.2.2.1 Design Bases 6.2-41

6.2.2.2 System Design 6.2-43

6.2.2.3 Design Evaluation 6.2-48

6.2.2.4 Tests and Inspections 6.2-50

6.2.2.5 Instrumentation Requirements 6.2-51

6.2.3 Secondary Containment Functional Design 6.2-51

6.2.4 Containment Isolation System 6.2-51

6.2.4.1 Design Bases 6.2-52

6.2.4.2 System Design 6.2-52

6.2.4.3 Design Evaluation 6.2-53

6.2.4.4 Tests and Inspections 6.2-55

6.2.5 Combustible Gas Control in Containment 6.2-55

6.2.5.1 Design Bases 6.2-56

6.2.5.2 System Design 6.2-57

6.2.5.3 Design Evaluation 6.2-58

6.2.5.4 Tests and Inspections 6.2-58

6.2.5.5 Instrumentation Requirements 6.2-59

6.2.6 Containment Leakage Testing 6.2-59

6.2.6.1 Containment Integrated Leakage Rate Testing 6.2-59

6.2.6.2 Containment Penetration Leakage Rate Testing 6.2-60
6.2.6.3 Containment Isolation Valve Leakage Rate Test 6.2-60
6.2.6.4 Scheduling and Reporting of Periodic Tests 6.2-60
6.2.6.5 Special Testing Requirements 6.2-60
6.2.7 Fracture Prevention of Containment Pressure Vessel 6.2-60
6.2.8 Combined License Information 6.2-60
6.2.9 References 6.2-61
6.3 Emergency Core Cooling Systems 6.3-1
6.3.1 Design Bases 6.3-1
6.3.1.1 Safety Injection 6.3-1
6.3.1.2 Safe Shutdown 6.3-2
6.3.1.3 Containment pH Control 6.3-2
6.3.1.4 Compliance with Regulatory Requirements 6.3-2
6.3.1.5 Reliability Design Bases 6.3-3
6.3.2 System Design 6.3-3
6.3.2.1 Schematic Piping and Instrumentation Diagrams 6.3-3
6.3.2.2 Equipment and Component Descriptions 6.3-5
6.3.2.3 Applicable Codes and Classifications 6.3-13
6.3.2.4 Material Specifications and Compatibility 6.3-13
6.3.2.5 System Reliability 6.3-14
6.3.2.6 Protection Provisions 6.3-15
6.3.2.7 Provisions for Performance Testing and Inspection 6.3-15
6.3.2.8 Manual Actions 6.3-15
6.3.3 Performance Evaluation 6.3-16
6.3.3.1 Operational Restrictions 6.3-21

6.3.3.2 ECCS Performance Criteria 6.3-21
6.3.3.3 Single Failure Considerations 6.3-21
6.3.3.4 ECCS Flow Performance 6.3-21
6.3.3.5 Use of Dual-Function Components for ECCS 6.3-22
6.3.3.6 Limits on Emergency Core Cooling Systems Parameters 6.3-22
6.3.4 Tests and Inspections 6.3-22
6.3.4.1 ECCS Performance Tests 6.3-23
6.3.4.2 Reliability Tests and Inspections 6.3-23
6.3.5 Instrumentation Requirements 6.3-24
6.3.5.1 Safety Injection Signal 6.3-24
6.3.5.2 Accumulators 6.3-25
6.3.5.3 Safety Injection Pumps 6.3-25
6.3.5.4 Refueling Water Storage Pit 6.3-26
6.3.6 Combined License Information 6.3-25
6.3.7 References 6.3-26
6.4 Habitability Systems 6.4-1
6.4.1 Design Basis 6.4-1
6.4.2 System Design 6.4-2
6.4.2.1 Definition of Control Room Envelope 6.4-3
6.4.2.2 Ventilation System Design 6.4-3
6.4.2.3 Leaktightness 6.4-6
6.4.2.4 Interaction with Other Zones and Pressure-Containing Equipment 6.4-7
6.4.2.5 Shielding Design 6.4-7
6.4.3 System Operational Procedures 6.4-7
6.4.4 Design Evaluations 6.4-8

6.4.4.1 Radiological Protection 6.4-8
6.4.4.2 Toxic Gas Protection 6.4-8
6.4.5 Testing and Inspection 6.4-8
6.4.6 Instrumentation Requirement 6.4-8
6.4.7 Combined License Information 6.4-9
6.4.8 References 6.4-9
6.5 Fission Product Removal and Control Systems 6.5-1
6.5.1 ESF Filter Systems 6.5-1
6.5.1.1 Design Bases 6.5-2
6.5.1.2 System Design 6.5-2
6.5.1.3 Equipment Description 6.5-3
6.5.1.4 Design Evaluation 6.5-4
6.5.1.5 Tests and Inspections 6.5-5
6.5.1.6 Instrumentation Requirements 6.5-6
6.5.1.7 Materials 6.5-6
6.5.2 Containment Spray Systems 6.5-6
6.5.2.1 Design Bases 6.5-7
6.5.2.2 System Design (for Fission Product Removal) 6.5-7
6.5.2.3 Design Evaluation 6.5-8
6.5.2.4 Tests and Inspections 6.5-9
6.5.2.5 Instrumentation Requirements 6.5-9
6.5.2.6 Materials 6.5-9
6.5.3 Fission Product Control Systems 6.5-10
6.5.3.1 Primary Containment 6.5-10
6.5.3.2 Secondary Containments 6.5-10

6.5.4 Ice Condenser as a Fission Product Cleanup System 6.5-10
6.5.5 Pressure Suppression Pool as a Fission Product Cleanup System 6.5-10
6.5.6 Combined License Information 6.5-10
6.5.7 References 6.5-11
6.6 Inservice Inspection of Class 2 and 3 Components 6.6-1
6.6.1 Components Subject to Examination 6.6-1
6.6.2 Accessibility 6.6-1
6.6.3 Examination Techniques and Procedures 6.6-2
6.6.4 Inspection Intervals 6.6-3
6.6.5 Examination Categories and Requirements 6.6-3
6.6.6 Evaluation of Examination Results 6.6-4
6.6.7 System Pressure Tests 6.6-4
6.6.8 Augmented ISI to Protect against Postulated Piping Failures 6.6-4
6.6.9 Combined License Information 6.6-5
6.6.10 References 6.6-5

TABLES

Page

Table 6.1-1 Principle Engineered Safety Feature Pressure-Retaining Material Specifications 6.1-8

Table 6.1-2 Principle Engineered Safety Features Materials Exposed to Core Coolant and Containment Spray 6.1-10

Table 6.2.1-1 Summary of Calculated Containment and Pressure Results for a Range of Postulated Piping Failure Scenarios 6.2-65

Table 6.2.1-2 Basic Specifications of PCCV 6.2-66

Table 6.2.1-3 RWSP Design Features 6.2-67

Table 6.2.1-4 Initial Conditions for Maximum Containment Pressure Analytical Model 6.2-68

Table 6.2.1-5 Engineered Safety Feature Systems Information 6.2-69

Table 6.2.1-6 Summary of LOCA Transients Evaluated 6.2-71

Table 6.2.1-7 Summary of Sensitivity of ECCS Conditions on the Containment Pressure and Temperature 6.2-72

Table 6.2.1-8 Description and Summary Results For Evaluations of Various Pipe Sizes and Break Locations for Postulated Secondary Steam System Piping Failures (includes Plant Power Levels) 6.2-73

Table 6.2.1-9 Passive Heat Sinks used in Maximum Pressure Containment Analyses....6.2-75

Table 6.2.1-10 Passive Heat Sinks Material Properties 6.2-77

Table 6.2.1-11 Selected Key Events for the Worst-Case Postulated DEPSG Break....6.2-78

Table 6.2.1-12 Distribution of Energy at Selected Locations within Containment for the Worst-Case Postulated DEPSG Break 6.2-79

Table 6.2.1-13 Selected Key Events for the Worst-Case Postulated DEHLG Break....6.2-80

Table 6.2.1-14 Distribution of Energy at Selected Locations within Containment for the Worst-Case Postulated DEHLG Break 6.2-81

Table 6.2.1-15 Selected Key Events for the Secondary Steam System Piping Failure Transient, Case 5 - Highest Containment Pressure.....6.2-82

Table 6.2.1-16 Selected Key Events for the Secondary Steam System Piping Failure Transient, Case 1 - Highest Containment Temperature 6.2-82

Table 6.2.1-17 Steam Generator Subcompartment and Pressurizer Subcompartment Break Line Condition 6.2-83

Table 6.2.1-18 Break Mass and Energy Flow for the Blowdown Phase of the DEPSG Break 6.2-85

Table 6.2.1-19 Break Mass and Energy Flow for the Blowdown Phase of the DEHLG Break 6.2-88

Table 6.2.1-20 Break Mass and Energy Flow for the Reflood Phase of the DEPSG Break 6.2-91

Table 6.2.1-21 Break Mass and Energy Flow for the Long-term Cooling Phase of the DEPSG Break 6.2-94

Table 6.2.1-22 Elevations, Flow Areas, and Hydraulic Diameters used in Containment Mass and Energy Release Analyses 6.2-100

Table 6.2.1-23 Safety Injection Flow Rate for the DEPSG Break 6.2-101

Table 6.2.1-24 Stored Energy Source for Mass and Energy Release for LOCA ...6.2-102

Table 6.2.1-25 Description for Evaluations of Various Pipe Sizes and Break Locations for the Secondary Steam System Piping Failures (Includes Plant Power Levels).....6.2-103

Table 6.2.1-26 Mass and Energy Release Data for the Secondary Steam System Piping Failure Case 5 - Highest Containment Pressure....6.2-104

Table 6.2.1-27 Mass and Energy Release Data for the Secondary Steam System Piping Failure Case 1 - Highest Containment Temperature.....6.2-109

Table 6.2.1-28 Break Mass and Energy Flow for the Double Ended Guillotine Break Resulting in the Minimum Containment Pressures for use in ECCS Evaluation 6.2-113

Table 6.2.1-29 Basic Specifications of ESF used in Minimum Containment Pressure Analysis 6.2-119

Table 6.2.1-30 Passive Heat Sinks used in the Minimum Containment Pressure Analysis for ECCS Capability Studies 6.2-120

Table 6.2.1-31 Passive Heat Sinks Material Properties used for the Minimum Containment Pressure Analysis 6.2-122

Table 6.2.2-1 Input Values Employed in CSS Evaluation Calculations....6.2-123

Table 6.2.2-2 Comparison of RWSP Recirculation Intake Debris Strainer Design to RG 1.82 Requirements 6.2-124

Table 6.2.2-3 Failure Modes and Effects Analysis for CSS 6.2-145

Table 6.2.4-1 Design Information Regarding Provisions for Isolating Containment Penetrations....6.2-149

Table 6.2.4-2 Associated Containment Isolation Configurations....6.2-150

Table 6.2.4-3 List of Containment Penetrations and System Isolation Positions....6.2-151

Table 6.2.5-1 Containment Hydrogen Monitoring and Control Design Parameters....6.2-159

Table 6.3-1 Response of US-APWR to TMI Action Plan....6.3-27

Table 6.3-2 Response of US-APWR to Unresolved Safety Issues 6.3-29

Table 6.3-3 Response of US-APWR to Generic Safety Issues 6.3-31

Table 6.3-4 Response of US-APWR to Generic Letters and Bulletins....6.3-34

Table 6.3-5 Safety Injection System Design Parameters 6.3-46

Table 6.3-6 Failure Modes and Effects Analysis - Safety Injection System 6.3-49

Table 6.4-1 Main Control Room Emergency Filtration System - Equipment Specifications....6.4-11

Table 6.4-2 Emergency Control Room Envelope Ventilation - Comparison to Regulatory Guide 1.52 ....6.4-12

Table 6.4-3 Description of Radiation Shielding for the Control Room in a LOCA 6.4-17

Table 6.5-1 Summary of Fission Product Removal and Control Mechanisms 6.5-12

Table 6.5-2 Annulus Emergency Exhaust System - Equipment Specifications ..6.5-13

Table 6.5-3 Annulus Emergency Exhaust System - Comparison to Regulatory Guide 1.52....6.5-14

Table 6.5-4 Containment Sprayed/Unsprayed Volume 6.5-19

Table 6.5-5 Containment Operations Following a Design Basis Accident 6.5-20

FIGURES

Page

Figure 6.2.1-1 Calculated Internal Containment Pressure vs. Time for the Most Severe RCS Postulated Piping Failure 6.2-160

Figure 6.2.1-2 Calculated Internal Containment Temperature vs. Time for the Most Severe RCS Postulated Piping Failure 6.2-161

Figure 6.2.1-3 Calculated Internal Containment Pressure vs. Time for the Most Severe Secondary Steam System Postulated Piping Failure 6.2-162

Figure 6.2.1-4 Calculated Internal Containment Temperature vs. Time for the Most Severe Secondary Steam System Postulated Piping Failure 6.2-163

Figure 6.2.1-5 Containment Sectional View 6.2-164

Figure 6.2.1-6 Main Steam Line Penetrations 6.2-165

Figure 6.2.1-7 Feedwater Line Penetrations 6.2-166

Figure 6.2.1-8 RWSP Concrete Structure Partial Sectional View 6.2-167

Figure 6.2.1-9 Outline of Paths that Solutions from the ECCS and CSS would follow in the Containment to the RWSP 6.2-168

Figure 6.2.1-10 Volume of Ineffective Water 6.2-169

Figure 6.2.1-11 RWSP Water Levels 6.2-170

Figure 6.2.1-12 Transfer Piping 6.2-171

Figure 6.2.1-13 Refueling Cavity Drain Line 6.2-172

Figure 6.2.1-14 Communicating Piping of HVAC Pressure Equalization Chamber 6.2-173

Figure 6.2.1-15 RWSP Overflow Piping 6.2-174

Figure 6.2.1-16 RWSP Upper and Lower Plan View at Elevation 25 ft.- 3 in. 6.2-175

Figure 6.2.1-17 RWSP Panoramic Sectional View 6.2-176

Figure 6.2.1-18 Containment Pressure vs. Time for DEPSG Break (C_D=1.0) 6.2-177

Figure 6.2.1-19 Containment Atmospheric Temperature vs. Time for DEPSG Break (C_D=1.0).....6.2-178

Figure 6.2.1-20 RWSP Water Temperature vs. Time for DEPSG Break (C_D=1.0).....6.2-179

Figure 6.2.1-21 Containment Pressure vs. Time for DEPSG Break (C_D=0.6) 6.2-180

Figure 6.2.1-22 Containment Atmospheric Temperature vs. Time for DEPSG Break 124(C_D=0.6) 6.2-181

Figure 6.2.1-23 RWSP Water Temperature vs. Time for DEPSG Break (C_D=0.6).....6.2-182

Figure 6.2.1-24 Containment Pressure vs. Time for 3 ft^2 Pump Suction Break.....6.2-183

Figure 6.2.1-25 Containment Atmospheric Temperature vs. Time for 3 ft^2 Pump Suction Break.....6.2-184

Figure 6.2.1-26 RWSP Water Temperature vs. Time for 3 ft^2 Pump Suction Break 6.2-185

Figure 6.2.1-27 Containment Pressure vs. Time for DEHLG Break (C_D=1.0).....6.2-186

Figure 6.2.1-28 Containment Atmospheric Temperature vs. Time for DEHLG Break (C_D=1.0).....6.2-187

Figure 6.2.1-29 RWSP Water Temperature vs. Time for DEHLG Break (C_D=1.0).....6.2-188

Figure 6.2.1-30 Containment Pressure vs. Time for DEPSG Break with Maximum Safety Injection 6.2-189

Figure 6.2.1-31 Containment Atmospheric Temperature vs. Time for DEPSG Break with Maximum Safety Injection.....6.2-190

Figure 6.2.1-32 RWSP Water Temperature vs. Time for DEPSG Break with Maximum Safety Injection.....6.2-191

Figure 6.2.1-33 Containment Pressure vs. Time for DEPSG Break with Maximum Accumulator Water 6.2-192

Figure 6.2.1-34 Containment Atmospheric Temperature vs. Time for DEPSG Break with Maximum Accumulator Water.....6.2-193

Figure 6.2.1-35 RWSP Water Temperature vs. Time for DEPSG Break with Maximum Accumulator Water.....6.2-194

Figure 6.2.1-36 Containment Pressure vs. Time for DEPSG Break with Maximum Accumulator Flowrate 6.2-195

Figure 6.2.1-37 Containment Atmospheric Temperature vs. Time for DEPSG Break with Maximum Accumulator Flowrate 6.2-196

Figure 6.2.1-38 RWSP Water Temperature vs. Time for DEPSG Break with Maximum Accumulator Flowrate 6.2-197

Figure 6.2.1-39 Containment Pressure vs. Time for MSLB Case 1 (Double Ended Break, Reactor Power Level 102%, Offsite Power Available) 6.2-198

Figure 6.2.1-40 Containment Atmospheric Temperature vs. Time for MSLB Case 1 (Double Ended Break, Reactor Power Level 102%, Offsite Power Available) 6.2-199

Figure 6.2.1-41 RWSP Water Temperature vs. Time for MSLB Case 1 (Double Ended Break, Reactor Power Level 102%, Offsite Power Available) 6.2-200

Figure 6.2.1-42 Containment Pressure vs. Time for MSLB Case 2 (Double Ended Break, Reactor Power Level 75%, Offsite Power Available) 6.2-201

Figure 6.2.1-43 Containment Atmospheric Temperature vs. Time for MSLB Case 2 (Double Ended Break, Reactor Power Level 75%, Offsite Power Available) 6.2-202

Figure 6.2.1-44 RWSP Water Temperature vs. Time for MSLB Case 2 (Double Ended Break, Reactor Power Level 75%, Offsite Power Available 6.2-203

Figure 6.2.1-45 Containment Pressure vs. Time for MSLB Case 3 (Double Ended Break, Reactor Power Level 50%, Offsite Power Available) 6.2-204

Figure 6.2.1-46 Containment Atmospheric Temperature vs. Time for MSLB Case 3 (Double Ended Break, Reactor Power Level 50%, Offsite Power Available) 6.2-205

Figure 6.2.1-47 RWSP Water Temperature vs. Time for MSLB Case 3 (Double Ended Break, Reactor Power Level 50%, Offsite Power Available) 6.2-206

Figure 6.2.1-48 Containment Pressure vs. Time for MSLB Case 4 (Double Ended Break, Reactor Power Level 25%, Offsite Power Available) 6.2-207

Figure 6.2.1-49 Containment Atmospheric Temperature vs. Time for MSLB Case 4 (Double Ended Break, Reactor Power Level 25%, Offsite Power Available) 6.2-208

Figure 6.2.1-50 RWSP Water Temperature vs. Time for MSLB Case 4 (Double Ended Break, Reactor Power Level 25%, Offsite Power Available) 6.2-209

Figure 6.2.1-51 Containment Pressure vs. Time for MSLB Case 5 (Double Ended Break, Reactor Power Level 0%, Offsite Power Available) 6.2-210

Figure 6.2.1-52 Containment Atmospheric Temperature vs. Time for MSLB Case 5 (Double Ended Break, Reactor Power Level 0%, Offsite Power Available) 6.2-211

Figure 6.2.1-53 RWSP Water Temperature vs. Time for MSLB Case 5 (Double Ended Break, Reactor Power Level 0%, Offsite Power Available) 6.2-212

Figure 6.2.1-54 Containment Pressure vs. Time for MSLB Case 6 (1.65ft^2 Split Break, Reactor Power Level 102%, Offsite Power Available) 6.2-213

Figure 6.2.1-55 Containment Atmospheric Temperature vs. Time for MSLB Case 6 (1.65ft^2 Split Break, Reactor Power Level 102%, Offsite Power Available) 6.2-214

Figure 6.2.1-56 RWSP Water Temperature vs. Time for MSLB Case 6 (1.65ft^2 Split Break, Reactor Power Level 102%, Offsite Power Available) 6.2-215

Figure 6.2.1-57 Containment Pressure vs. Time for MSLB Case 7 (1.71ft^2 Split Break, Reactor Power Level 0%, Offsite Power Available) .. 6.2-216

Figure 6.2.1-58 Containment Atmospheric Temperature vs. Time for MSLB Case 7 (1.71ft^2 Split Break, Reactor Power Level 0%, Offsite Power Available) 6.2-217

Figure 6.2.1-59 RWSP Water Temperature vs. Time for MSLB Case 7 (1.71ft^2 Split Break, Reactor Power Level 0%, Offsite Power Available) 6.2-218

Figure 6.2.1-60 Containment Pressure vs. Time for MSLB Case 8 (Double Ended Break, Reactor Power Level 102%, Loss of Offsite Power) 6.2-219

Figure 6.2.1-61 Containment Atmospheric Temperature vs. Time for MSLB Case 8 (Double Ended Break, Reactor Power Level 102%, Loss of Offsite Power) 6.2-220

Figure 6.2.1-62 RWSP Water Temperature vs. Time for MSLB Case 8 (Double Ended Break, Reactor Power Level 102%, Loss of Offsite Power) 6.2-221

Figure 6.2.1-63 Containment Pressure vs. Time for MSLB Case 9 (Double Ended Break, Reactor Power Level 0%, Loss of Offsite Power) ..6.2-222

Figure 6.2.1-64 Containment Atmospheric Temperature vs. Time for MSLB Case 9 (Double Ended Break, Reactor Power Level 0%, Loss of Offsite Power) 6.2-223

Figure 6.2.1-65 RWSP Water Temperature vs. Time for MSLB Case 9 (Double Ended Break, Reactor Power Level 0%, Loss of Offsite Power) 6.2-224

Figure 6.2.1-66 Condensing Heat Transfer Coefficient on the Typical Structure as a Function of Time for the Most Severe DEPSG Break (C_D=1.0) 6.2-225

Figure 6.2.1-67 Condensing Heat Transfer Coefficient on the Typical Structure vs. Time for the Most Severe DEHLG Break (C_D=1.0) ..6.2-226

Figure 6.2.1-68 Condensing Heat Transfer Coefficient on the Typical Structure vs. Time for the MSLB case with the Most Severe Average Containment Temperature 6.2-227

Figure 6.2.1-69 Energy Release Rate and Integrated Energy Released for the Decay Heat 6.2-228

Figure 6.2.1-70 Reactor Cavity Sectional View 6.2-229

Figure 6.2.1-71 Reactor Cavity Plan View 6.2-230

Figure 6.2.1-72 Steam Generator Subcompartment Sectional View 6.2-231

Figure 6.2.1-73 Steam Generator Subcompartment Plan View 6.2-232

Figure 6.2.1-74 Pressurizer Subcompartment Sectional View 6.2-233

Figure 6.2.1-75 Pressurizer Subcompartment Plan View 6.2-234

Figure 6.2.1-76 Pressurizer Spray Valve Rooms Sectional View 6.2-235

Figure 6.2.1-77 Pressurizer Spray Valve Rooms Plan View 6.2-236

Figure 6.2.1-78 Regenerative Heat Exchanger Room Plan View 6.2-237

Figure 6.2.1-79 Letdown Heat Exchanger Room Plan View 6.2-238

Figure 6.2.1-80 Containment Pressure vs. Time for Postulated RCS DEGB Transient Employed in Minimum Containment Pressure Analyses for ECCS Performance Evaluations 6.2-239

Figure 6.2.1-81 Containment Atmospheric Temperature vs. Time for Postulated RCS DEGB Transient Employed in Minimum Containment Pressure Analyses for ECCS Performance Evaluations 6.2-240

Figure 6.2.1-82 RWSP Water Temperature vs. Time for Postulated RCS DEGB Transient Employed in Minimum Containment Pressure Analyses for ECCS Performance Evaluations 6.2-241

Figure 6.2.1-83 Condensing Heat Transfer Coefficient on the Typical Structure as a Function of Time for Postulated RCS DEGB Transient Employed in Minimum Containment Pressure Analyses 6.2-242

Figure 6.2.1- 84 Containment Energy Distribution Transient for DEPSG Break (C_D=1.0) 6.2-243

Figure 6.2.1-85 Containment Energy Distribution Transient for DEHLG Break (C_D=1.0) 6.2-244

Figure 6.2.2-1 Flow Diagram of the Containment Spray System 6.2-245

Figure 6.2.2-2 Containment Spray Nozzle 6.2-247

Figure 6.2.2-3 Containment Spray System Nozzle Orientation on Spray Ring....6.2-248

Figure 6.2.2-4 Containment Spray System Nozzle Spray Patterns 6.2-249

Figure 6.2.2-5 Containment Spray System Spray Ring Elevations.....6.2-252

Figure 6.2.2-6 Containment Spray System Spray Nozzle Locations and Predicted Coverage on Operating Floor 6.2-253

Figure 6.2.2-7 Required Water Volumes vs. Pit Capacities 6.2-254

Figure 6.2.2-8 Plan View of RWSP and ECC/CS Suction Strainers 6.2-255

Figure 6.2.2-9 Sectional View of RWSP and ECC/CS Suction Strainers 6.2-256

Figure 6.2.4-1 Containment Isolation Configurations.....6.2-257

Figure 6.2.5-1 Containment Hydrogen Monitoring and Control System Schematic 6.2-307

Figure 6.2.5-2 Airflow Patterns in Response to CSS Operation (for Design Evaluation of Hydrogen Monitoring and Control System).....6.2-308

Figure 6.3-1 Emergency Core Cooling System Schematic Flow Diagram.....6.3-60

Figure 6.3-2 ECCS Piping and Instrumentation Diagram 6.3-61

Figure 6.3-3 SIS Elevation Diagram 6.3-65

Figure 6.3-4 Safety Injection Pump Performance Flow Requirement.....6.3-66

Figure 6.3-5 Accumulator Flow Schematic Characteristics.....6.3-67

Figure 6.3-6 Overview of the Accumulator.....6.3-68

Figure 6.3-7 Refueling Water Storage System 6.3-69

Figure 6.3-8 NaTB Baskets Plan View.....6.3-70

Figure 6.3-9 NaTB Baskets Sectional View 6.3-71

Figure 6.3-10 Containment Spray Pattern Plan View at the NaTB Basket Installation Level.....6.3-72

Figure 6.3-11 Containment Spray Pattern Sectional View at the NaTB Basket Installation Level.....6.3-73

Figure 6.3-12 NaTB Solution Transfer Piping Diagram.....6.3-74

Figure 6.3-13 ECCS Process Flow Diagram (RV Injection).....6.3-75

Figure 6.3-14 ECCS Process Flow Diagram (Simulataneous RV and hot leg injection) 6.3-76

Figure 6.3-15 High Head Safety Injection Flow Characteristic Curve (Minimum Safeguards).....6.3-77

Figure 6.3-16 High Head Safety Injection Flow Characteristic Curve (Maximum Safeguards).....6.3-78

Figure 6.4-1 Main Control Room Envelope.....6.4-19

Figure 6.4-2 MCR HVAC System (Normal Operation Mode).....6.4-20

Figure 6.4-3 MCR HVAC System (Emergency Pressurization Mode) 6.4-21

Figure 6.4-4 MCR HVAC System (Emergency Isolation Mode).....6.4-22

Figure 6.4-5 Emergency Control Room Envelope Ventilation System Plan View 6.4-23

Figure 6.4-6 Emergency Control Room Envelope Ventilation System Sectional View 6.4-24

Figure 6.4-7 Diagrammatic Representation of Total Main Control Room LOCA Dose 6.4-25

Figure 6.5-1 Annulus Emergency Exhaust System - Simplified Flow Diagram ... 6.5-21

ACRONYMS AND ABBREVIATIONS

ac	alternating current
ANSI	American National Standards Institute
AOO	anticipated operational occurrence
ASME	American Society of Mechanical Engineers
ASTM	American Society for Testing and Materials
BAT	boric acid tank
BBR	BBR VT International Ltd
BWR	boiling water reactor
BWROG	boiling water reactor owners' group
CCWS	component cooling water system
CFD	computational fluid dynamics
CFR	Code of Federal Regulations
CHS	containment hydrogen monitoring and control system
CIS	containment isolation system
COL	Combined License
CRE	control room envelope
CSS	containment spray system
C/V	containment vessel
CVCS	chemical volume and control system
CVTR	Carolinas-Virginia Tube Reactor
DBA	design-basis accident
dc	direct current
DCD	Design Control Document
DECLG	double-ended cold leg guillotine pump discharge
DEGB	double-ended guillotine break
DEHLG	double-ended hot leg guillotine
DEPSG	double-ended pump suction guillotine
DF	decontamination factor
DNBR	departure from nucleate boiling ratio
DOP	dioctyl phthalate
DPS	containment depressurization system
DVI	direct vessel injection
EAB	exclusion area boundary
ECCS	emergency core cooling system
EFW	emergency feedwater
ERDA	Energy Research and Development Administration (now U.S. DOE)
ESF	engineered safety features
ESFAS	engineered safety feature actuation system
FAB	feed and bleed

FMEA	failure modes and effects analysis
FSAR	Final Safety Analysis Report
FSS	fire service system
GDC	General Design Criteria
HCI	hydrochloric acid
HEPA	high-efficiency particulate air
HHSI	high-head injection system
HI	hydriodic acid
HNO_3	nitric acid
HPSI	high pressure safety injection
HVAC	heating, ventilation, and air conditioning
IAS	instrument air system
ICIGS	in core instrument gas purge system
I&C	instrumentation and control
ISI	inservice inspection
IST	inservice testing
LBB	leak-before-break
LCO	limiting condition for operation
LOCA	loss-of-coolant accident
LOOP	loss of offsite power
LPZ	low-population zone
LRT	leakage rate testing
M signal	main control room isolation signal
MCC	motor control center
MCR	main control room
MHI	Mitsubishi Heavy Industries, Ltd.
MN	mega-newton
MSFWS	main steam and feedwater system
MSIV	main steam isolation valve
MSLB	main steam line break
NaTB	sodium tetraborate decahydrate
NPSH	net positive suction head
NRC	U.S. Nuclear Regulatory Commission
PA	postulated accident
PASS	post accident sampling system
PCCV	prestressed concrete containment vessel
P&ID	piping and instrumentation diagram
PMWS	primary makeup water system
POS	plant operation state
PRT	pressurizer relief tank
PS	prestress

P signal	containment isolation signal
PWR	pressurized-water reactor
QA	quality assurance
RCCA	rod cluster control assembly
RCS	reactor coolant system
RCPB	reactor coolant pressure boundary
RESAR	reference safety analysis report
RG	Regulatory Guide
RHR	residual heat removal
RHRS	residual heat removal system
RMS	plant radiation monitoring system
RSC	remote shutdown console
RWS	refueling water storage system
RWSP	refueling water storage pit
SFPCS	spent fuel pit cooling and Purification system
SG	steam generator
SGBDS	steam generator slowdown system
SI	safety injection
SIS	safety injection system
SLB	steam line break
SRP	Standard Review Plan
SSC	structure, system, and component
SS	sampling system
SSAS	station service air system
SSE	safe-shutdown earthquake
S signal	safety injection signal
TBE	thin bed effect
TEDE	total effective dose equivalent
TMI	Three Mile Island
VAC	volts alternating current
VSL	VSL International, ltd.
VWS	chilled water system
WG	water gauge
WMS	waste management system
ZOI	zone of influence

6.0 Engineered Safety Features

Engineered safety features (ESFs) reduce the consequences of postulated accidents (PAs). Further, ESFs protect the public health and safety in the unlikely event of an accidental release of radioactive fission products from the reactor coolant system (RCS). ESFs will automatically act to limit, control, and terminate unplanned events, while maintaining the radiation exposure to the public well below the applicable regulatory limits and guidelines. The following are ESFs of the US-APWR:

- containment system
- emergency core cooling system (ECCS)
- habitability system
- fission product removal and control system

In addition to meeting the codes and standards of Title 10, Code of Federal Regulations (CFR) Part 50.55a (Ref. 6.0-1), the US-APWR ESFs satisfy the requirements of the following Appendix A requirements of 10CFR50 (Ref. 6.0-2):

- General Design Criteria (GDC) 1: For quality standards concerning design, fabrication, erection, and testing of ESF components.
- GDC 4: The ESF components are designed to accommodate the effects of and are compatible with the environmental conditions associated with normal operation, maintenance, testing, and postulated accidents, including loss-of-coolant accidents (LOCAs).
- GDC 14: The ESF systems are designed, fabricated, erected, and tested so as to have an extremely low probability of causing an abnormal leakage, of rapidly propagating a failure, and of a gross rupture of the reactor coolant pressure boundary (RCPB).
- GDC 31: The ESF systems are designed to assure that when stressed under operating, maintenance, testing, and postulated accident conditions; (1) the RCPB behaves in a non-brittle manner, and (2) the probability of a rapidly propagating fracture is minimized.
- GDC 35: The ESFs provide abundant emergency core cooling. Heat can be transferred from the reactor core following any loss of reactor coolant at a rate such that (1) fuel and clad damage that could interfere with the continued effective core cooling is prevented; and (2) clad metal-water reaction is limited to negligible.
- GDC 41: The ESFs control fission products, hydrogen, oxygen, and other substances that may be released into the reactor containment to ensure that the containment integrity is maintained.

The ESF systems discussed in this chapter are those that limit the consequences of postulated accidents in the US-APWR. This chapter identifies the functional requirements, demonstrates how the functional requirements comply with regulatory

requirements, and demonstrates how the ESF design meets or exceeds the functional requirements. This section of the Design Control Document (DCD) lists and discusses each system that is considered to be part of the ESF systems.

6.0.1 Engineered Safety Feature Material

The materials used in constructing and fabricating ESF components and systems, as well as their interaction with ECCS fluids and post-accident conditions, are considered in Section 6.1. The material specifications, selection, treatment, and coatings are described. Materials are selected and treated to improve hardness, strength, corrosion resistance, and ductibility; and to reduce the probability of a rapidly propagating fracture.

6.0.2 Containment Systems

The US-APWR containment, as discussed in subsection 6.2.1, completely encloses the reactor and RCS. The containment is essentially leak tight to ensure that no significant amount of radioactive material can reach the environment, even in the unlikely event of a RCS failure.

The containment is a prestressed, post-tensioned concrete structure with a cylindrical wall, a hemispherical dome, and a flat, reinforced concrete foundation slab. To ensure leak tightness during normal operation and under postulated accident conditions, the US-APWR containment is designed and built to safely accommodate an internal pressure of 68 pounds per square inch gauge (psig).

The following are US-APWR containment systems:

- containment heat removal system
- containment isolation system (CIS)
- containment hydrogen monitoring and control system (CHS)

The containment spray system (CSS) limits the peak containment pressure to less than the design pressure and is capable of reducing the containment pressure to approximately atmospheric in the unlikely event of an accident. The CSS shares the residual heat removal system (RHRS) pumps and heat exchangers. The containment spray piping, spray rings, and nozzles are unique to the CSS.

All lines that penetrate the containment are provided with isolation features. The containment isolation system valves that automatically close when required do not automatically re-open when the isolation condition “clears.” If a loss of actuating power occurs, the valves remain closed. Re-opening such automatic containment isolation valves requires deliberate, manual action by a plant operator.

The CHS monitors and limits the concentration of hydrogen in containment. In the unlikely event that excessive hydrogen is detected in containment, hydrogen igniters burn excess hydrogen in a controlled manner, thus, avoiding potential, localized containment damage.

The US-APWR containment is designed to permit periodic leakage rate testing. The periodic leakage rate testing program is the responsibility of any utility that references the US-APWR design for construction and licensed operation.

6.0.3 Emergency Core Cooling Systems

The ECCS removes heat from the reactor core following postulated design basis events. The US-APWR ECCS consists of the following:

- accumulator system
- high head injection system
- emergency letdown system

The accumulators are passive devices that inject borated water directly into each of four reactor cold legs. The accumulators have a dual flow rate design; a large initial flow rate for the immediate vessel refill, and a small flow rate of longer duration for a continued core re-flood.

The high head injection system combines its flow performance with the flow rate of the accumulators to ensure a timely flow response and a long-term injection for core cooling. The safety injection pumps automatically start and deliver borated water from the refueling water storage pit for the duration of the event. Four, 50% capacity, safety injection pumps are provided.

The emergency letdown system performs a “feed and bleed” (FAB) letdown boration to establish cold shutdown conditions if the normal chemical volume and control system (CVCS) is unavailable. The emergency letdown system directs the reactor coolant from two reactor vessel hot legs (B and D) to the refueling water storage pit, from which highly borated water can be returned to the reactor vessel using the safety injection pumps.

6.0.4 Habitability Systems

The control room habitability system is the ESF that allows operators to remain safely inside the control room envelope while taking the necessary actions to manage and control unusual, unsafe, or abnormal plant conditions, including a loss-of-coolant accident (LOCA). The control room habitability system protects the operators against postulated releases of radioactive material, toxic gases, and smoke, and enables the operators to occupy the control room envelope safely and for an extended time.

6.0.5 Fission Product Removal and Control Systems

Fission product removal systems are ESFs that confine fission products that are released from the reactor core as a result of the design basis LOCA and become airborne. Sometimes referred to as “atmosphere cleanup,” fission products are confined in the sense that their free mobility and circulation would otherwise raise the potential of an unintended release to the environment. The containment controls reduce leakage of fission products from the containment to ensure that the leakage fraction that may reach

the environment is below limits. Thus, the US-APWR fission product removal (three systems) and control (containment) systems are as follows:

- main control room (MCR) heating, ventilation, and air conditioning (HVAC) System
- annulus emergency exhaust system
- containment spray system
- containment vessel

The annulus emergency exhaust system is separate and distinct from the control room habitability system, which is presented in Section 6.4. The plant ventilation systems for Class-1E electrical rooms, safeguard component areas emergency feed pump areas, and the emergency power sources are presented in Chapter 9, subsection 9.4.1. The containment spray for containment cooling is presented in Chapter 6, subsection 6.2.2.

6.0.6 Inservice Inspection (ISI) of Class 2 and Class 3 Components

Regular and periodic examinations, tests, and inspections of pressure retaining components (and supports) are required by 10CFR50.55a(g) (Ref. 6.0-1). Section 6.6 discusses the ISI and testing programs to address these requirements.

6.0.7 Combined License Information

No additional information is required to be provided by a COL applicant in connection with this section.

6.0.8 References

6.0-1 Codes and Standards, 10CFR50.55a, Nuclear Regulatory Commission, U.S., Washington, D.C., January 2007 Edition.

6.0-2 General Design Criteria for Nuclear Power Plants, 10CFR50 Appendix A, Nuclear Regulatory Commission, U.S., Washington, D.C., January 2007 Edition.

6.1 Engineered Safety Feature Materials

This section provides information on the material selection and fabrication of ESF systems. In addition to other important attributes, the materials used in ESF systems are selected for compatibility with the reactor coolant and reactor water storage pit (RWSP) water, as well as a wetting spray that combines these fluids with sodium tetraborate decahydrate (NaTB) RWSP additive in the unlikely event of a design-basis accident (DBA). In addition to the material selection, this section discusses the material treatment processes.

6.1.1 Metallic Materials

Chapter 3 identifies the American Society of Mechanical Engineers (ASME) Boiler and Pressure Vessel Code 2001 Edition through 2003 Addenda that apply to the design and manufacture of the US-APWR components described in this DCD. Later (more recent) editions or addenda to the ASME Code may be used for materials, as allowed by the ASME Code, provided that the more recent edition and/or addenda are permitted by 10CFR50.55a, or are authorized as a proposed alternative under 10CFR50.55a(a)(3) (Ref. 6.1-1). Chapter 3 also presents (or references) all design, analysis, and construction requirements imposed by the U.S. Nuclear Regulatory Commission (NRC) on plant structures, systems, and components (SSCs).

6.1.1.1 Materials Selection and Fabrication

The material specifications used for the RCPB piping and valves in Chapter 5, subsection 5.2.3, are applied to pressure retaining materials of ESF systems, and are listed in Table 6.1-1. The materials for use in ESF systems are selected for compatibility with core coolant and containment spray solutions, as described in ASME Code Section III (Ref. 6.1-2), Articles NC-2160 and NC-3120. Consideration of the deterioration of materials during service due to thinning by corrosion, erosion, mechanical abrasion, or other environmental effects has been included in the design of ESF components and systems.

Table 6.1-1 presents the material specifications for pressure retaining materials of the prestressed concrete containment vessel (PCCV) and other ESF systems that are not part of the RCPB. The grade and type of the ESF materials have been chosen to enhance corrosion resistance, strength, and hardness. The RCPB materials are described in Chapter 5, subsection 5.2.3. The materials proposed for the ESFs comply with Appendix I to ASME Code Section III (Ref. 6.1-2); and Parts A, B, and C of ASME Code Section II (Ref 6.1-3). The material specifications for the pressure-retaining materials of ESF components meet the requirements of ASME Code Section III, Class 2, Article NC-2000 for Quality Group B, ASME Code Section III, Class 3, Article ND-2000 for Quality Group C, and ASME Code Section III for containment pressure boundary components. The materials used in the fabrication of containment penetrations meet the requirements of ASME Code Section III, Division 1, Articles NC-2000 or NE-2000.

The construction materials of ESF systems are compatible with core coolant and containment spray solutions. The ESF construction materials that would be exposed to

core coolant and containment spray solutions in the event of a DBA are listed in Table 6.1-2.

The requirements from RG 1.44 (Ref. 6.1-4) are followed during the manufacture and construction of the ESF components and structures. The material used to fabricate the safety significant portions of the ESF systems (including supports) is highly resistant to corrosion. Process controls are enforced during all aspects of the component fabrication and construction to minimize the exposure of stainless steel to contaminants that could lead to stress-corrosion cracking. To avoid significant sensitization during fabrication and assembly of austenitic stainless steel components of the ESF, halogens and halogen-bearing compounds (e.g., die lubricants, abrasives, marking compounds, and masking tape) are not used in the welding processes during the construction of ESF components. Austenitic stainless steel base materials for ESF applications are solution annealed to prevent sensitization and stress corrosion cracking. Furnace-sensitized materials are not used in ESF systems. When practical, solution heat-treating includes rapid cooling rates following welding to minimize the formation of carbon deposits in the heat affected zone of the material.

All ESF components in contact with core coolants and containment spray solutions are either fabricated from or clad with austenitic stainless steel. Pressure-retaining cold-worked austenitic stainless steel components are minimized, when possible. The use of pressure-retaining cold-worked austenitic stainless steel components is controlled, measured, and documented during the fabrication process, including abrasive work. The pressure-retaining cold-worked austenitic stainless steel components with a 0.2% yield strength greater than 90,000 pounds per square inch (psi) are not be used in ESF systems to reduce the possibility of stress-corrosion cracking. The Combined License (COL) Applicant is responsible to develop an augmented ISI program to ensure the structural integrity of such components during service.

Operating experience has demonstrated that certain nickel-chromium-iron alloys are susceptible to stress-corrosion cracking. When necessary, nickel-chromium-iron alloys used in the fabrication of ESF components in the US-APWR design is limited to Alloy 690. Alloy 690 was shown to have a high resistance to stress-corrosion cracking.

Fracture toughness properties of the materials used in ESF components are in complete agreement with the ASME Code Section III, Subarticles NC/ND/NE-2300 and this agreement maintained.

The control of welding, heat treatment, welder qualification, and contamination protection for ESF ferritic and austenitic stainless steel material fabrication are described in Chapter 5, subsection 5.2.3.

For areas of limited access, welder qualification includes a simulated access mockup equivalent to the physical access and visibility of the production weld, in compliance with Regulatory Guide (RG) 1.71 (Ref. 6.1-5).

The effect of core coolant and containment spray solutions on austenitic stainless steel in a post-LOCA environment has been investigated (Ref. 6.1-6). This report provides test data and concludes that no cracking is anticipated on any equipment (stressed,

sensitized or non-sensitized) even in the presence of postulated levels of chlorides and fluorides, provided the emergency core cooling solution is maintained above pH of 7.0.

6.1.1.2 Composition and Compatibility of Core Cooling Coolants and Containment Sprays

Controls are instituted to maintain the chemistry of the borated reactor coolant and the borated water in the RWSP. Chlorides and fluorides, which promote intergranular stress-corrosion cracking corrosion, are managed such that their concentrations are below 0.15 parts per million (ppm). During periods of high temperatures, dissolved oxygen concentrations remain below 0.10 ppm. The controls include the chemical and volume control system (CVCS) and the spent fuel pit cooling and purification system (SFPCS). Details on these control systems are provided in Chapter 9, subsection 9.3.4, for the CVCS and in subsection 9.1.3 for the SFPCS.

6.1.1.2.1 Compatibility of Construction Materials with Core Cooling Coolants and Containment Sprays

The provision of RG 1.44 (Ref. 6.1-4) are followed during the manufacture and construction of the ESF components and structures. The material used to fabricate the safety, significant portions of the ESF systems (including supports) is highly resistant to corrosion. The sources of corrosion may originate with the fluid (to include air in the ESF air clean-up applications) contained and delivered, as well as from external sources. Borated reactor coolant, borated emergency make-up water, and a wetting containment spray that combines these fluids with NaTB are important potential sources of such internal and external corrosion.

The pH of the ESF fluids is controlled during a DBA using NaTB baskets as a buffering agent. NaTB baskets are placed in the containment to maintain the desired post-accident pH conditions in the recirculation water. Maintaining the pH in the RWSP avoids stress-corrosion cracking of the austenitic stainless steel components and avoids excessive generation of hydrogen attributable to corrosion of containment metals. The COL Applicant is responsible to a develop a program to maintain an inventory of all acids and bases within the containment to aid in control of the pH of the recirculating water and the control of hydrogen generation within a post-DBA environment.

The materials used in the fabrication of the ESF components are corrosion resistant in normal operation and the post-LOCA environment. General corrosion is negligible with the exception of low-alloy and carbon steels. Some materials within the containment would yield hydrogen gas by corrosion from the emergency cooling or containment spray solutions. Their use is limited as much as practicable (Ref. 6.1-7).

Borated water is used in the RCS and the RWSP. The water quality requirements for the RCS and RWSP are described in Chapter 9, subsection 9.3.4. The pH of the RWSP during a LOCA is adjusted by the NaTB baskets. The concrete that forms the structure of the RWSP is clad in stainless steel which inhibits the leach-out of chlorides and other contaminants into the RWSP water. Therefore, the compatibility of the ESF components is preserved in the post-LOCA environment.

Min-K-based pipe insulation is prohibited in containment, unless encased in stainless steel “cans.” Non-metallic (thermal) insulation is controlled in accordance with RG 1.36 (Ref. 6.1-8) to control the leachable concentrations of chlorides, fluorides, sodium compounds, and silicates. Chapter 5, subsection 5.2.3.2.3, provides further details on the external insulation requirements applicable to ESFs. Close attention to regulatory requirements and guidance ensures material compatibility between US-APWR construction materials and ESF fluids.

6.1.1.2.2 Controls for Austenitic Stainless Steel

Chapter 5, subsection 5.2.3, describes the controls employed during material selection to preclude the severe sensitization of stainless steel materials to be used for fabrication. For example, cold worked austenitic stainless steel (300 series) typically is solution heat treated. Controls may be based on, but are not limited to, those imposed by Appendix B to 10CFR50, Appendix B part, 50, "Quality Assurance Criteria for Nuclear Power Plants and Fuel Reprocessing Plants", with particular emphasis on Criteria VII, “Control of Purchased Material, Equipment, and Services;” VIII, Identification and Control of Materials, Parts, and Components; and IX, Control of Special Processes (Ref. 6.1-9). When using fresh water to flush systems containing austenitic stainless steel components following construction, a chloride stress-corrosion cracking inhibitor is used in the flushing medium. The COL Applicant complies with the provisions and recommendations provided by ASME NQA-1-1994, Part II (Ref. 6.1-10) when developing programs that support the cleaning of materials and components, cleanness control, and pre-operational flushing for systems that contain austenitic stainless steel components as recommended by RG 1.37 (Ref. 6.1-11). This program includes documentation to verify the compatibility of materials used in manufacturing ESF components with ESF fluids.

Control of welding, heat treatment, welder qualification, and contamination protection for ESF ferritic and austenitic stainless steels material fabrication are described in Chapter 5, subsection 5.2.3.

6.1.1.2.3 Composition, Compatibility and Stability of Containment and Core Coolants

607,500 gallons of borated water are available in the RWSP to meet LOCA and long-term post-LOCA coolant needs. The RWSP water is borated to approximately 4,000 ppm boric acid, at a pH of approximately 4.3. Crystalline NaTB spray additive is stored in containment and is used to raise the pH of the RWSP water from 4.3, to at least 7.0, post-LOCA. This pH is consistent with the guidance of NRC Branch Technical Position MTEB-6.1 for the protection of austenitic stainless steel from chloride-induced stress corrosion cracking. Subection 6.3.2.2.5 describes the design of NaTB baskets. At this pH, corrosive attack of stainless steel alloys used in containment will be insignificant. Similarly, a post-LOCA hydrogen generation (due to material corrosion) is negligible. In addition, the generation of chemical precipitates from aluminum will be minimized.

6.1.2 Organic Materials

With the notable exception of coatings and electrical insulation, organic materials (e.g., wood, plastics, lubricants, asphalt) are not freely available in containment. A corrosion inhibiting primer (e.g., inorganic zinc) typically is applied as a base coating over the steel plate lining of the containment vessel, as well as to structural steel support members. A scuff resistant top coat (e.g., epoxy) is then applied for durability and decontamination considerations. When practical, carbon steel access and support components inside containment (e.g., stairs, ladders, landings, gratings, handrails, ventilation ducts, cable trays) may be hot-dip galvanized. The operating surfaces of components (e.g., valve handwheels, operating handles) are typically factory coated for mechanical durability and resistance to the containment operating environment. These coatings may be dry-powder or water-reduced materials. However, factory application, to sometimes small and complex shapes, under controlled conditions, makes such coatings highly resistant to removal. With rare and minor exception (e.g., protective coatings on trim pieces, faceplates, and covers) coatings used inside containment are applied in accordance with RG 1.54 (Ref. 6.1-12), and meet the applicable environmental qualifications described in Chapter 3, Section 3.11. The COL Applicant is responsible to identify and quantify all organic materials that exist in significant amounts in the containment (e.g., wood, plastics, lubricants, paint or coatings, electrical cable insulation, and asphalt). Coatings not intended for a 60-year service without overcoating should include total overcoating thicknesses expected to be accumulated over the service life of the substrate surface.

6.1.3 Combined License Information

Any utility that references the US-APWR design for construction and Licensed operation is responsible for the following COL items:

COL 6.1(1) *The COL Applicant complies with the provisions and recommendations provided by ASME NQA-1-1994, Part II when developing programs that support the cleaning of materials and components, cleanness control, and pre-operational flushing for systems that contain austenitic stainless steel components as recommended by RG 1.37. This program includes documentation to verify the compatibility of materials used in manufacturing ESF components with ESF fluids.*

COL 6.1(2) *The COL Applicant is responsible to develop an augmented ISI program to ensure the structural integrity of pressure-retaining cold-worked austenitic stainless steel components.*

COL 6.1(3) *The COL Applicant is responsible to a develop a program to maintain an inventory of all acids and bases within the containment to aid in control of pH within a post-LOCA environment.*

COL 6.1(4) *The COL Applicant is responsible to identify materials within the containment that would yield hydrogen gas by corrosion from the emergency cooling or containment spray solutions, and their use should be limited as much as practicable.*

COL 6.1(5) *The COL Applicant* is responsible to *identify and quantify all organic materials that exist in significant amounts in the containment (e.g., wood, plastics, lubricants, paint or coatings, electrical cable insulation, and asphalt). Coatings not intended for 60-year service without overcoating should include total overcoating thicknesses expected to be accumulated over the service life of the substrate surface.*

COL 6.1(6) *The COL Applicant is responsible to prepare and implement an erosion/corrosion monitoring program.*

6.1.4 References

6.1-1 Codes and Standards, Title 10, Code of Federal Regulation, 10CFR50.55a January 2007 Edition.

6.1-2 ASME Boiler and Pressure Vessel Code Section III, Division 1, American Society of Mechanical Engineers, July 01 2002.

6.1-3 ASME Boiler and Pressure Vessel Code Section II, Division 1, American Society of Mechanical Engineers , July 01 2002.

6.1-4 U.S. Nuclear Regulatory Commission, Control of the Use of Sensitized Stainless Steel, Regulatory Guide 1.44, May 1973.

6.1-5 U.S. Nuclear Regulatory Commission, Welder Qualification for Areas of Limited Accessibility, Regulatory Guide 1.71, Rev. 1, March 2007.

6.1-6 Behavior of Austenitic Stainless Steel in Post Hypothetical Loss-of-Coolant Environment, WCAP-7798-L (Proprietary) November, 1971 and WCAP-7803 (Non-Proprietary) December 1971.

6.1-7 U.S. Nuclear Regulatory Commission, Control of Combustible Gas Concentrations in Containment, Regulatory Guide 1.7, Rev. 3, March 2007.

6.1-8 U.S. Nuclear Regulatory Commission, Nonmetallic Thermal Insulation for Austenitic Stainless Steel, Regulatory Guide 1.36, February 1973.

6.1-9 Quality Assurance Criteria for Nuclear Power Plants and Fuel Reprocessing Plants, Title 10, Code of Federal Regulation, 10CFR50 Appendix B, January 2007 Edition.

6.1-10 Quality Assurance Program Requirements for Nuclear Facility Applications, ASME NQA-1-1994, Part II American Society of Mechanical Engineers, July 29 1994.

6.1-11 Nuclear Regulatory Commission, Quality Assurance Requirements for Cleaning of Fluid Systems and Associated Components of Water-Cooled Nuclear Power Plants, Regulatory Guide 1.37, Rev. 1, March 2007.

6.1-12 Nuclear Regulatory Commission, Service Level I, II, and III Protective Coatings Applied to Nuclear Power Plants, Regulatory Guide 1.54, Rev. 1, July 2000.

Table 6.1-1 Principle Engineered Safety Feature Pressure Retaining Material Specifications (Sheet 1 of 2)

ESF Component	Material Specification
Piping/Tubing	SA-106, Gr. B and C
	SA-155 Gr. KC70 Class 1 and 70 Class 1
	SA-213, TP 304, 304L, and 316
	SA-249, TP 304L
	SA-312, TP 304 and 304L
	SA-333 Gr. 1 and 6
	SA-376, TP 304 and 316
	SB-111 Gr. CDA 706
	SB-466 Gr. CDA 706
	SB-167 UNS N06690
Fittings/flanges	SA-105 N
	SA-181, Gr. I and II
	SA-182, TP F304, F304L, F316, and F316L
	SA-234 Gr. WPB, WPBW, WPCW, and WPC
	SA-403, WP 304, 304L, 304W, and 304LW
	SA-420 Gr. WPL6
	SA-479, TP 304, 304L, and 316
Plate	SA-240, TP 304, 304L, and 316L
	SA-285 Gr. A and C
	SA-36
	SA-515 Gr. 60, 70
	SA-516 Gr. 60, 70
	SA-615 Gr. 60
	SA-537 Class 1
	SB-171 Gr. CDA 706
	ASTM A 515 Gr. 70
Shapes	SA-36
	ASTM A-36
	ASTM A-500 Gr. B (Code Case N-71-10)
Bolts/nuts/studs/pins	SA-193 Gr. B6, B7, B8, and B8M
	SA-194, Gr. 2H, 8H, 8M, 7, 4, 6, and B8
	SA-307 Gr. B
	SA-320 Gr. L7
	SA-325 Type 1
	SA-453 Gr. 660A and 660B

Table 6.1-1 Principle Engineered Safety Feature Pressure Retaining Material Specifications (Sheet 2 of 2)

ESF Component	Material Specification
Castings	SA-216 Gr. WCB and WCC
	SA-217 Gr. WC9
	SA-351 Gr. CF8M and CF3M
	SA-487 Gr. CA6NM
	SB-61
	SB-62 GR. CDA 836
	SB-148 Gr. CA 952
	ASTM-A276 TP410
Forgings	SA-105
	SA-182, TP F304, F304L, F316, and F316L; Gr. F11 and F22
	SA-240 TP 304 and 316
	SA-350 Gr. LF1 and LF2
	SA-479, TP 304, 304L and 316
Bars	SA-479, TP 304, 316 and 410 Gr. 316L and F316
	SA-564 Gr. 630
Weld rod	SFA 5.1, E 6010 and E7018
	SFA 5.4, E-308-16, E 308L-16 and E 309
	SFA 5.9, ER 308, ER 308L, and ER 309
	SFA 5.17, EM 12K
	SFA 5.18, E 70S-2, E 70S-3, E 70S-4, E70S-6, and E 70S-1B
	SFA 5.20, E 70T-1 and 70T-5

Table 6.1-2 Principle Engineered Safety Features Materials Exposed to Core Coolant and Containment Spray (Sheet 1 of 2)

ESF Component	Material Specification
Piping/Tubing	SA-106, Gr. B and C
	SA-155 Gr. KC70 Class 1 and 70 Class 1
	SA-213, TP 304, 304L, and 316
	SA-249, TP 304L
	SA-312, TP 304 and 304L
	SA-333 Gr. 1 and 6
	SA-376, TP 304 and 316
	SB-111 Gr. CDA 706
	SB-466 Gr. CDA 706
	SB-167 UNS N06690
	SA 358 TP 304, 304L, 316L
Fittings/flanges	SA-105 N
	SA-181, Gr. I and II
	SA-182, TP F304, F304L, F316, and F316L
	SA-234 Gr. WPB, WPBW, WPCW, and WPC
	SA-403, WP 304, 304L, 304W, and 304LW
	SA-420 Gr. WPL6
	SA-479, TP 304, 304L, and 316
Plate	SA-240, TP 304, 304L, and 316L
	SA-285 Gr. A and C
	SA-36
	SA-515 Gr. 60, 70
	SA-516 Gr. 60, 70
	SA-615 Gr. 60
	SA-537 Class 1
	SB-171 Gr. CDA 706
	ASTM A 515 Gr. 70
Shapes	SA-36
	ASTM A-36
	ASTM A-500 Gr. B (Code Case N-71-10)

Table 6.1-2 Principle Engineered Safety Features Materials Exposed to Core Coolant Water and Containment Spray (Sheet 2 of 2)

ESF Component	Material Specification
Bolts/nuts/studs/pins	SA-193 Gr. B6, B7, B8, and B8M
	SA-194, Gr. 2H, 8H, 8M, 7, 4, 6, and B8
	SA-307 Gr. B
	SA-320 Gr. L7
	SA-325 Type 1
	SA-453 Gr. 660A and 660B
	SA-564 Gr. 630
	ASTM A 193 Gr. B7
	ASTM 194 Gr. 7
	ASTM A 307
	ASTM A 354
	ASTM A 490
Bars	SA-479, TP 304, 316, 410, 316L, and F316
	SA-564 Gr. 630
	ASTM A 108 Gr. 1018 CW (Code Case N-71-5)
Forgings	SA-105
	SA-181 Gr 70
	SA-182, TP F304, F304L, F316 and F316L; Gr. F11 and F22
	SA-240, TP 304 and 316
	SA-350 Gr. LF1 and LF2
	SA-479, TP 304, 304L and 316
	ASTM A 668 Class C (Code Case N-71-5)
Castings	SA-216 Gr. WCB and WCC
	SA-217 Gr. WC9
	SA-351 GR. CF8M and CF3M
	SA-487 Gr. CA6NM
	SB-61
	SB-62 Gr. CDA 836
	SB-148 Gr. CA 952
	ASTM A 276 TP 410
	ASTM A-216 Gr. WCB
Cooling Coil Fins	SB-152 Gr. CDA 122

6.2 Containment Systems

This section describes the physical attributes of the reactor containment and how these physical attributes address and satisfy the containment functional design requirements. This section also describes the following ESF systems directly associated with containment:

- Containment structure (vessel), including subcompartments
- Containment spray system
- Containment isolation system
- Containment hydrogen monitoring and control system

For each of these systems and structures, this section describes the design bases, the design features, and the evaluations of the acceptability of the design. For some systems (such as the containment structure), the design evaluation is conducted in conjunction with analyses of postulated accidents (documented in Chapter 15, “Transient and Safety Analyses”), which can release material and energy into the containment, resulting in increased pressure and temperatures inside the containment vessel. This section describes the detailed assessments of the mass and energy releases associated with these postulated accidents.

6.2.1 Containment Functional Design

The containment is designed as an essentially leak-tight barrier that will safely and reliably accommodate calculated temperature and pressure conditions resulting from the complete size spectrum of piping breaks, up to and including a double-ended, guillotine-type break of a reactor coolant or main steam line.

The containment is designed to be compatible with all environmental effects experienced during normal operations. These include, but are not limited to, containment temperature, pressure, humidity, presence of fluids (e.g., equipment lubricants and borated reactor coolant), and other assorted environmental effects of reactor operation, testing, and maintenance.

The containment is also designed to accommodate conditions during and following postulated accidents, such as the design basis loss-of-coolant accident (LOCA). These conditions include elevated temperature, pressure and humidity. Conditions also include radioactive fission products, NaTB, and borated water. The peak pressure for the most severe postulated accident does not exceed the containment internal design pressure, which is 68 psig.

As described in Chapters 3 and 5, systems and components inside containment are designed, supported, and restrained to withstand postulated normal, seismic and accident dynamic effects.

The containment function described above is maintained also in the hot shutdown conditions, Modes 3 and 4 described in Chapter 16, when the postulated accident could cause a release of radioactive material in the containment and an increase in containment pressure and temperature. The conditions for Mode 1 or Mode 2 are assumed for the containment analyses in this section because the energy sources including reactor coolant fluid and metal energy, steam generator fluid and metal energy, core stored energy, and decay heat are much larger than that in the Mode 3 and 4 shutdown condition.

6.2.1.1 Containment Structure

6.2.1.1.1 Design Bases

As presented in Sections 3.2 and 3.8, the containment is designed and constructed to withstand a broad spectrum of seismic events. To comply with GDC 16, the containment is designed to ensure leak tightness during normal operations and, under postulated accident conditions, the containment is designed and built to safely withstand an internal pressure of 68 psig. The containment design pressure 68 psig is based on the LOCA event which bounds the SLB event, from the containment peak pressure standpoint. Adequate design margin is demonstrated by a containment test pressure of 78.2 psig. The containment design temperature is 300°F.

Table 6.2.1-1 summarizes containment temperature and pressure (and comparisons to design pressure), for a broad range of postulated breaks, and assumed system and component failures. Figure 6.2.1-1 through Figure 6.2.1-4 are plots of containment internal pressure and temperature versus time for the most severe primary and secondary system piping failures. These figures show that internal containment pressure is reduced to less than 50% of the peak value 24 hours after event initiation.

Table 6.2.1-1 and Figure 6.2.1-1 through Figure 6.2.1-4 are based on evaluations where uncertainties and tolerances with respect to the containment and its heat removal systems are biased to generate conservatively high values. The results show that the containment heat removal system is adequate to maintain containment conditions within design limits assuming a worst single failure condition in addition to one heat removal train being out of service. For primary system piping breaks, loss of offsite power (LOOP) is assumed. For secondary system piping breaks, the cases where LOOP is not assumed are also considered, since the LOOP can possibly reduce releases to the containment. The containment heat removal systems are described in detail in Section 6.2.2. Additional information about the bases for Table 6.2.1-1 and Figure 6.2.1-1 through Figure 6.2.1-4 is given in Subsection 6.2.1.1.3.

Subsections 6.2.1.3 and 6.2.1.4 describe evaluations performed to determine the sources and amounts of mass and energy that might be released into the containment. Specific time-dependent mass and energy release rate results from these evaluations are described in Subsections 6.2.1.3 and 6.2.1.4.

The single failure condition related to containment pressure and temperature calculations is the failure of one of the four emergency power sources. In addition, another emergency power source is assumed to be out of service, which leads to only

two emergency power sources being available. This results in minimum containment heat removal capability and minimum safety injection flow. The effect of maximum injection flow is evaluated assuming single failure plus the outage of one train of the four-train containment heat removal system.

The containment depressurization rate, as shown in Figure 6.2.1-1 and Figure 6.2.1-3, is established by two trains of the containment heat removal systems. These figures show that internal containment pressure is reduced to less than 50% of the peak value within 24 hours after event initiation, which is consistent with the assumptions used in the calculations of the offsite radiological consequences of the accident.

Evaluations are performed to calculate a time-dependent “minimum” containment pressure transient during a postulated LOCA. In this evaluation, which is described in subsection 6.2.1.5, uncertainties and tolerances are biased to generate conservatively low pressure values. The results from this evaluation are used in ECCS performance analysis reported in the LOCA analyses section in Chapter 15. These minimum containment pressure values are used for conservatism, because a high containment pressure value leads to non-conservative fuel clad temperature calculations during the reflood stage of a large-break LOCA, when the reactor vessel internal pressure is essentially the same as the containment pressure.

Numerous operational sequences addressing low-power and shutdown operations are provided in Chapter 19, subsection 19.1.6.1. These plant operation state (POS) consider assumed plant configuration, potential initiators and plant response, including the potential for various loss of decay heat removal capability such as loss of steam generator(s), CCW/ESWS and RHRS. Remedial operations are described including use of the CVCS and SIS. These POSs provide a bases for operational responses to the postulated events.

6.2.1.1.2 Design Features

The containment is a prestressed, post-tensioned concrete structure with a cylindrical wall, hemispherical dome, and a flat, reinforced concrete foundation slab. It is often described in this DCD as “prestressed concrete containment vessel” (PCCV), containment vessel, or simply “containment.” The inner height of the containment is approximately 226.5 ft and the inside diameter of the containment cylinder measures approximately 149 ft. The containment dome is 3 ft.-8 in. or 4 ft.-4 in. thick, while the containment wall thickness is 4 ft.-4 in. The inner surface of containment includes a 0.25 in. welded steel plate liner anchored to the concrete. The containment is equipped with a polar crane, which transfers its load to the containment wall via a crane girder.

The US-APWR containment is designed to withstand a negative pressure of 3.9 psi (vacuum) relative to ambient (i.e., external pressure 3.9 psig higher than internal pressure). An evaluation concludes that this design feature provides sufficient margin in the event of containment pressure reduction caused by inadvertent initiation of the containment spray system, and discussed in Subsection 6.2.1.1.3.

The containment has a 60-year design life.

The containment is constructed with three large openings: two personnel airlocks and one equipment hatch.

All other containment penetrations go to the containment annulus. The containment has electrical and mechanical penetrations. Piping which penetrates containment is provided with isolation valves (some penetrations require inside and outside isolation valves). The annulus emergency exhaust system (Subsection 6.5.2) automatically establishes a slightly negative pressure in the annulus following a safety injection (SI) signal, and filters the exhaust air before discharge.

The refueling water storage pit (RWSP) is located at the bottom of the containment, at elevation 3 ft.-7 in. The RWSP is roughly configured as a horseshoe-shaped box around the containment perimeter. A partial sectional view showing the concrete structure and cladding is shown in Figure 6.2.1-8. The open end of the RWSP is oriented at containment 0° azimuth (plant north), where the reactor coolant drain tank, reactor coolant drain pumps and the containment sump are located.

Table 6.2.1-2 lists basic specifications for the PCCV. Figure 6.2.1-5 presents a sectional view of the containment. Figure 6.2.1-5 through Figure 6.2.1-7 show details of the personnel air locks and the equipment hatch, as well as major pipe penetrations (steam and feedwater lines). Section 1.3 describes additional general arrangement drawings that include the containment structure and major components inside it.

The RWSP is the source of borated-water for emergency core cooing and containment spray systems.

The US-APWR containment is basically a PWR dry design. However, it differs from many other PWR containments, in that the source of emergency core cooling water for the safety injection system (SIS) and containment spray system (CSS) is located inside the containment. Thus, there is no need for any “switch-over” of ECCS suction from an external source to the containment recirculation sump. Bases and analysis related to ECCS performance are discussed in Subsection 6.2.1.5.

Containment ladders, walkways and gratings are designed as “free-flow, pass through" and non-pressure retaining, as discussed in Section 3.8. Containment cavities and pits where water may be trapped and not drain to the RWSP during SIS and CSS operation, are shown in Figure 6.2.1-9. The potential for water to collect in the locations is accounted for in the containment design evaluations and is quantified in Figure 6.2.1-10. Water levels of the RWSP are shown in Figure 6.2.1-11.

Figure 6.2.1-9 through Figure 6.2.1-15 also shows containment drainage paths into the RWSP. Piping is provided through several partitions above the RWSP where water could otherwise be trapped. In particular, piping that allows free communication and drainage is installed between the refueling cavity and the pressure equalizing chamber, as shown in Figure 6.2.1-9. These communication pipes are closed with a flange at both ends during refueling. Drain piping also is provided between the pressure equalizing chamber and the RWSP. Figure 6.2.1-16 and Figure 6.2.1-17 present the plan and sectional view of the RWSP, while Table 6.2.1-3 presents RWSP design and containment-related features.

As discussed in Chapter 3, the RWSP is designed as Seismic Category I, Safety Class 2 system, with a RWSP design water peak temperature following LOCA of 270°F. Pressure in the RWSP air space is relieved to the containment atmosphere. The inside walls and floor of the RWSP (in contact with 4,000 ppm boric acid solution) are lined with steel plate clad with stainless steel. The RWSP ceiling (underside of floor at containment elevation 25 ft.- 3 in.) is not expected to be in contact with RWSP boric acid solution, but is clad with stainless steel plate nevertheless.

The containment test pressure is 78.2 psig, as described in subsection 6.2.1.1.1. Flow testing of the spray system is described in subsection 6.2.2.4.

6.2.1.1.3 Design Evaluation

The GOTHIC computer code is employed to evaluate the performance of the containment system under postulated accident conditions (Ref. 6.2-1). Both loss of coolant accident (LOCA) and main steam line break (MSLB) events are considered. The GOTHIC model includes an integrated simplified primary system model to calculate the long term (post reflood) mass and energy release. Using a conservative model prescription, GOTHIC predicts the time dependent containment pressure and temperature and the temperature of the water in the RWSP. The peak conditions are within acceptable limits and pressure at 24 hours after event initiation is less than one-half the peak containment pressure.

6.2.1.1.3.1 GOTHIC Computer Code Overview

GOTHIC is a general purpose thermal-hydraulics code for performing design, licensing, safety and operating analysis of nuclear power plant containments and other confinement buildings. GOTHIC was developed for the Electric Power Research Institute (EPRI) by Numerical Applications, Inc. (NAI) (Ref. 6.2-1). A summary description of GOTHIC capabilities is given below. More detailed descriptions of the code user options, models and qualification are documented in References 6.2-1 through 6.2-3.

GOTHIC solves the conservation equations for mass, momentum and energy for multi-component, multi-phase flow in lumped parameter and/or multi-dimensional geometries. The phase balance equations are coupled by mechanistic models for interface mass, energy and momentum transfer that cover the entire flow regime from bubbly flow to film/drop flow, as well as single phase flows. The interface models allow for the possibility of thermal non-equilibrium between phases and unequal phase velocities, including countercurrent flow. GOTHIC includes full treatment of the momentum transport terms in multi-dimensional models, with optional models for turbulent shear and turbulent mass and energy diffusion. Other phenomena include models for commonly available safety equipment, heat transfer to structures, hydrogen burn and isotope transport.

Conservation equations are solved for up to three primary fields and three secondary fields. The primary fields are steam/gas mixture, continuous liquid and liquid droplet; the secondary fields are mist, ice, and liquid components. For the primary fields, GOTHIC calculates the relative velocities between the separate but interacting fluid fields, including the effects of two-phase slip on pressure drop. GOTHIC also calculates heat

transfer between phases, and between surfaces and the fluid. Reduced equation sets are solved for the secondary fields by the application of appropriate assumptions, as described in the reference documents.

The three primary fluid fields may be in thermal non-equilibrium in the same computational cell. For example, saturated steam may exist in the presence of a superheated pool and subcooled drops. The solver can model steam, water and noncondensing gases over of full range of temperature and pressure conditions anticipated for the design basis accidents.

The steam/gas mixture is referred to as the vapor phase and is comprised of steam and, optionally, up to eight different non-condensing gases. The non-condensing gases available in the model are defined by the user. Mass balances are solved for each component of the steam/gas mixture, thereby providing the volume fraction of each type of gas in the mixture.

The mist field is included to track very small water droplets that form when the atmosphere becomes super saturated with steam. The liquid component field allows particles or liquid globules to be tracked in the liquid phase.

The principal element of the model is a control volume, which is used to model the space within a building or subsystem that is occupied by fluid. The fluid may include non-condensing gases, steam, drops or liquid water. GOTHIC features a flexible noding scheme that allows computational volumes to be treated as a lumped parameter (single node) or one-, two- or three-dimensional elements, or any combination of these within a single model.

Turbulence and molecular diffusion are available to predict the transport of mass, momentum and energy due to turbulence and molecular behavior in subdivided volumes. Laminar and turbulent leakage models, which are applicable to lumped parameter and subdivided volumes, are available to predict flow through small and larger cracks, respectively.

Solid structures are referred to in GOTHIC as thermal conductors. Thermal conductors are modeled as one-dimensional slabs for which heat transfer occurs between the fluid and the conductor surfaces and, within a conductor, perpendicular to the surfaces. The one-dimensional thermal conductors can be combined into a conductor assembly to model two-dimensional conduction.

GOTHIC includes a general model for heat transfer between thermal conductors and the steam/gas mixture or the liquid. There is no direct heat transfer between thermal conductors and liquid droplets. Thermal conductors can exchange heat by thermal radiation. Any number of conductors can be assigned to a volume.

Fluid boundary conditions allow the user to specify mass sources and sinks and energy sources and sinks for control volumes. Thermal boundary conditions applied through a heat transfer option on a thermal conductor surface can be used as energy sources and sinks for solid structures.

There are four features in GOTHIC for modeling hydraulic connections, as follows:

- Flow paths
- Network models
- Cell interface connections in subdivided volumes
- 3D connectors for subdivided volumes

Flow paths model hydraulic connections between any two computational cells, which includes lumped parameter volumes and cells in subdivided volumes. Flow paths are also used to connect boundary conditions to computational cells where mass, momentum and energy can be added or removed. A separate set of momentum equations (one for each phase) is solved for each flow path.

Network nodes and links are available specifically for modeling building ventilation or piping systems. These types of hydraulic connections can include multiple branches between connected volumes. Network nodes are assigned to the branch points.

Adjacent cells within a subdivided volume communicate across the cell interface, based on the characteristics of the hydraulic connection. 3D flow connectors define the hydraulic connection across cell interfaces that are common to two subdivided volumes.

GOTHIC includes an extensive set of models for operating equipment. These items, referred to collectively as components, include pumps and fans, valves and doors, heat exchangers and fan coolers, vacuum breakers, spray nozzles, coolers and heaters, volumetric fans, hydrogen recombiners, igniters, pressure relief valves.

Initial conditions allow the user to specify the state of the fluid and solid structures within the modeled region at the start of a transient. These include the initial temperature and composition of the atmosphere, the location and temperature of liquid pools, the location and amount of liquid components, and the temperatures of solid structures within the building.

Additional resources available to expand the realm of situations that can be modeled by GOTHIC include functions, control variables, trips and material properties.

6.2.1.1.3.2 GOTHIC Application to Containment analyses

This subsection provides a brief summary of the methodology used to construct the containment analytical model and the integrated primary system model for the US-APWR containment design evaluation (Ref. 6.2-4).

The US-APWR GOTHIC model is similar to the model used by Dominion in its Surry Plant containment analysis methodology that was previously approved by the NRC (Ref. 6.2-5). Minor model changes for the containment were made to accommodate the US-APWR containment design feature locating RWSP in the containment.

A single volume containment model is used. The water in the RWSP is assumed to form a pool at the bottom of the containment, with appropriate assumptions on the heat and mass transfer at the pool. The model includes thermal conductors for steel and concrete and a model for the spray system.

The approach for long term mass and energy release analysis utilizes an integrated GOTHIC model that calculates both the primary system post reflood behavior following a LOCA and the corresponding containment response. During a LOCA event, most of the vessel water is displaced by the steam generated by flashing. The reactor vessel is then refilled accordingly by the accumulator injection and the high head injection system (HHIS). GOTHIC is not suitable for modeling the reflood period because it involves quenching of the fuel rods, where film boiling conditions may exist. Current versions of GOTHIC do not have models for quenching and film boiling. For the period from LOCA initiation through the end of reflood, the mass and energy release rates are obtained from the SATAN-VI(M1.0) and WREFLOOD(M1.0) codes, as described in Reference 6.2-4, and supplied to the GOTHIC containment model through boundary conditions.

GOTHIC can model the primary system mass and energy release after the core has been recovered. Beyond this time, injection systems continue to supply water to the vessel. Residual stored energy and decay heat comes from the fuel rods. Stored energy in the vessel and primary system metal are also gradually transferred to the injection water, which eventually spills out of the break and into the containment.

Buoyancy driven circulation through the intact steam generator loops removes stored energy from the steam generator metal and the water on the secondary side. Depending on the location of the break, the water injected into the primary system may pass through the steam generator on the broken loop and pick up heat from the stored energy in the secondary system.

Subsection 6.2.1.1.3.3 summarizes key elements of the containment model. The primary system model is described in Subsection 6.2.1.3 and Reference 6.2-4.

This GOTHIC-based model is used to determine the maximum containment pressure during a worst-case LOCA and also to determine the minimum or conservatively low containment pressure as a function of time that is used for evaluations of the ECCS, which are documented in the accident analyses in Chapter 15. Low containment pressure is conservative for evaluations of the performance of the ECCS during the reflood phase of a large break LOCA. This minimum pressure evaluation is described in Subsection 6.2.1.5.

The GOTHIC computer program is also employed for the evaluation response to secondary steam system piping failures. In these analyses, GOTHIC is used in conjunction with the MARVEL-M computer program. MARVEL-M is the source of the mass and energy flow rates associated with the postulated steam blowdown, which causes the containment pressure and temperature increase. The use of the MARVEL-M computer program in these analyses is described in Subsection 6.2.1.4.

6.2.1.1.3.3 Containment Analysis Methodology

This section provides a summary of the methodology used to develop the containment analysis model for the US-APWR.

Containment Noding

Typical plant licensing analyses for a PWR use a single volume (node) for the containment, with separate treatment given to sump (RWSP) and containment atmosphere regions. Inherent in this lumped parameter approach is the assumption that within each region the fluid is well mixed. During a LOCA or MSLB, the mixing induced by the break jet is significant. Later in the transient, CSS flow continues to promote mixing in the containment.

Although GOTHIC has the capability to model the containment in more detail and calculate the three-dimensional distribution of mass and energy, the lumped parameter approach is used for the US-APWR containment response model. This approach is justified by the experimental series of the Carolinas-Virginia Tube Reactor (CVTR), which were simulated with both lumped parameter and 3D models (Ref. 6.2-3, Ref. 6.2-6). The CVTR tests were typical of an MSLB located high in the containment except that the steam was introduced through a diffuser that reduced the jet momentum and mixing. Results from the subdivided simulations indicate near well-mixed conditions in the upper containment above the operating deck, but significantly lower and varied temperatures and steam concentrations in the region below the operating deck. The degree of mixing was similar during the steam injection while the containment sprays were active. In the CVTR containment, the operating deck is a major obstruction between the upper and lower containment, and certainly contributed to the non-uniformity of the atmosphere. Experimental results for LOCA type conditions in the Marviken and Heissdampfreaktor (HDR) containments also indicate significant variation in conditions within the containment (Ref. 6.2-7). While these test containments are more compartmentalized than a typical large dry containment, they indicate that some degree of non-uniformity is possible.

Results from lumped and subdivided GOTHIC models for the CVTR tests indicate that the predicted peak pressure and temperature from the lumped analysis are larger than in the subdivided analysis. Prior to the activation of the containment sprays, the major energy removal mechanism during a blowdown is heat transfer to the containment structures due to convection and condensation. Even though there may be less than perfect mixing in the containment, the increased condensation rate in the steam-rich regions more than compensates for the reduced exposure of the containment structures to the steam from the break.

The foregoing justification for a single volume approach to predict peak containment pressure and temperature applies to both DBA LOCA and MSLB conditions. In these accident scenarios, the high energy region in the containment is large even though the entire containment might not be fully mixed and the concrete structures are still absorbing heat when the short duration blowdown is over. After the sprays are activated, the open regions of the containment are expected to be fairly well mixed and the single volume lumped model should be representative of the actual conditions (Ref. 6.2-8).

Containment volume input parameters are selected to ensure that the model gives conservative results. For a given mass and energy release, a low estimate for the free volume will give higher peak pressure and temperature.

The liquid vapor interface area is used to calculate the heat and mass transfer between the vapor and the liquid phase. In the single volume containment model, it is set to zero to isolate the relatively cool water in the RWSP from the remainder of containment. This prevents the energy in the vapor phase from being transferred to the RWSP water resulting in higher peak containment temperature and pressure.

Heat Sinks

Conductors are used to model the thermal capacity of various solid structures inside containment and are the primary heat sink for the blowdown energy. Although two-dimensional conduction solutions are possible with GOTHIC, the one-dimensional conductors are consistent with the lumped modeling approach.

It is neither practical nor necessary to model each individual piece of equipment or structure in the containment with a separate conductor. Smaller conductors of similar material composition are combined into a single effective conductor. In this combination it is important to preserve the total mass and the total exposed surface area of the conductors. The thickness controls the response time for the conductors and is of secondary importance. Wall conductors are grouped by thickness, with the effective thickness for a group being defined by

$$t_{eff} = \frac{\sum_{i \in group} t_i A_i}{\sum_{i \in group} A_i}$$

Conductors with high heat flux at the surface and low thermal conductivity must have closely spaced nodes near the surface to adequately track the steep temperature profile that develops within the conductor. The Auto Divide feature in GOTHIC is used to obtain appropriate noding. This feature sets the node spacing so that the node Biot number, defined as the ratio of external to internal conductance, is less than 0.1 for each node.

GOTHIC thermal conductors can include multiple layers of different materials. Different layers are used to model painted surfaces, steel liners over concrete surfaces, and the air gap between the liner and concrete. Conduction through stagnant air is assumed for gaps.

The DIRECT heat transfer option of the Diffusion Layer Model (DLM) for condensation in the GOTHIC code is used for all containment heat sinks. The selected DLM option does not include enhancement effects due to film roughening or mist formation in the boundary layer. Under the DIRECT option, all condensate goes directly to the liquid pool at the bottom of the volume. The effects of the condensate film on the heat and mass transfer are incorporated into the formulation of the DLM option.

Under the DLM option, the condensation rate is calculated using a heat and mass transfer analogy to account for the presence of non-condensing gases. It has been validated against seven test sets as reported in the GOTHIC Qualification Report (Ref. 6.2-3). It also compares well with Nusselt's theory for the condensation of pure steam where the rate is controlled by the heat transfer through the condensate film. As shown in the GOTHIC Qualification Report, the DLM option, without enhancement effects due to film roughening and mist formation, generally underpredicts the condensation rate and has previously been accepted for licensing analysis for both LOCA and MSLB (Ref. 6.2-9, Ref. 6.2-10).

The option of natural convection heat transfer for sensible heat transfer is activated as allowed by NUREG-0588 (Ref. 6.2-11). The selected natural convection option is for a vertical wall or cylinder. Although the DIRECT/DLM validation basis includes tests with forced convection heat and mass transfer, forced convection has not been accepted for licensing analysis for peak temperature and pressure, and is not used in the evaluation model.

A characteristic height can be specified for each heat transfer option. This is used to estimate the film thickness that builds up on the conductor. For typical large dry containment conditions, the heat and mass transfer is controlled by the boundary layer in the vapor phase. The resistance through the liquid film is relatively small so the specified height is of secondary or less importance. In the evaluation model with the DLM option, the characteristic height is set to DEFAULT, the node height. This gives thick liquid films which will slightly reduce the heat and mass transfer rates once the film is fully established. This is conservative for containment pressure and temperature analysis.

For all containment heat sinks, the conductor face that is not exposed to the containment atmosphere is assumed to be insulated. This is accomplished by using the Specified Heat Flux option of the GOTHIC code, with the nominal heat flux set to zero.

Containment Sprays

GOTHIC includes models that calculate sensible heat transfer between the droplets and the vapor and evaporation or condensation at the droplet surface. The efficiency, i.e., the actual temperature rise over the difference between the vapor temperature and the droplet inlet temperature, cannot be directly specified in GOTHIC. The efficiency is primarily a function of the droplet diameter. The GOTHIC models account for the effect of droplet diameter through the Reynolds number-dependent fall-velocity and heat transfer coefficients. A heat and mass transfer analogy is used to calculate the effective mass transfer coefficient, which is used to calculate the evaporation or condensation.

The spray system is modeled with a flow path that draws water from the RWSP at the bottom of containment. Pump, heat exchanger and nozzle components located on the flow path control the water flow and cooling rates and convert the liquid water to droplets before injecting them into the containment atmosphere. The droplet diameter, containment height, deposition area and other input parameters are specified as described in the following paragraphs to achieve a reasonable, but conservative estimate of the overall spray effectiveness.

Spray nozzles typically deliver a spectrum of droplet sizes. Smaller droplets fall more slowly and reach equilibrium with the vapor more quickly than larger droplets because of the larger surface area to mass ratio. GOTHIC does not directly model the droplet size distribution. It is assumed that the specified diameter is the Sauter mean diameter, 0.039in.

A given mass of droplets at the Sauter mean diameter has the same surface area to mass ratio as the actual droplet spectrum. The consistency of the surface area to mass ratio ensures that the heat transfer rate to heat capacity ratio is correctly approximated.

A given mass of droplets at the Sauter mean diameter also has the same total projected area to mass ratio as the actual droplet distribution. Since the deposition rate is given by a balance of the body force and the drag force on the projected area, the fall velocity and deposition rate of the Sauter mean droplets are representative of the full droplet spectrum.

The droplet fall velocity is a function of the droplet drag coefficient. The coefficients used in GOTHIC are those recommended by Ishii and include the effects of a large population of droplets falling together (Ref. 6.2-12).

The droplet heat and mass transfer models have been validated using data from Spillman (Ref. 6.2-13). The GOTHIC predicted evaporation rate is in the middle of the range of evaporation rates from experimental data and rates from correlations. Since evaporation and condensation are controlled by the same mechanism (i.e., turbulent diffusion through the boundary layer), it is reasonable to expect that GOTHIC fairly represents the condensation rate.

The lumped parameter approach assumes that conditions are uniform throughout the volume. When sprays are injected into a volume, the droplets are assumed to be uniformly distributed throughout the volume regardless of the specified elevation of the junction that carries the spray flow. However, in the actual containment there are typically some regions that are not directly covered by the sprays. The containment geometry parameters must be set to properly account for the spray heat and mass transfer in the covered region.

The heat and mass transfer at the spray droplet surface is determined by the droplet and atmosphere temperatures, the steam content of the atmosphere, the droplet surface area and the heat and mass transfer coefficients. The heat and mass transfer coefficients depend on the fluid properties at the given temperatures, the droplet diameter and pressure, and the fall velocity of the spray droplets.

Appropriate heat and mass transfer coefficients are applied when the droplet diameter is consistent with the actual spray droplet size and if the fall velocity is correct. Spray droplets typically reach their terminal velocity within a few feet of the nozzle and the fall velocity is assumed equal to the terminal velocity for lumped modeling in GOTHIC. The terminal velocity depends on the droplet diameter and the atmosphere properties. GOTHIC calculates appropriate heat and mass transfer coefficients when the spray droplet diameter is set to the actual Sauter mean diameter, as discussed previously.

From the definition of the Sauter mean droplet diameter, the total droplet surface area exposed to the atmosphere is correct when the total droplet volume suspended in the atmosphere is correct. Considering the GOTHIC model definitions for suspended droplet volume and droplet deposition rate, it can be shown that the correct droplet volume and surface area exposed to the containment atmosphere are achieved when the containment volume height is set to

$$H = \frac{V_s}{A_f^c}$$

where V_s is the sprayed volume, assumed to be the upper volume of the operation floor, and A_f^c is the floor area where the droplets are deposited.

The sprayed volume, V_s, depends on the elevation and spacing of the spray headers, the spacing and orientation of the nozzles, and the nozzle spray angle. The deposition area, A_f^c, is set to the total horizontal area at the bottom of the sprayed regions where the spray water collects.

The RWSP water is cooled by the CS/RHR heat exchanger prior to discharging to the containment through the spray header. The heat exchanger surface areas and heat transfer coefficients are specified to match the design value of UA (overall heat transfer coefficient times area) for the containment spray and component cooling water system (CCWS) heat exchangers.

6.2.1.1.3.4 Description of Containment Analyses

Evaluations have been performed using the evaluation model described in the preceding subsections to determine internal containment vessel conditions following a spectrum of RCS pipe ruptures (LOCA) and MSLB accidents. In these evaluations, all assumptions and the effects of uncertainties and tolerances have been selected to produce conservatively high containment internal pressures.

For the LOCA events, the following cases are analyzed for a break spectrum, as described in Subsection 6.2.1.3.1.

- Double-ended cold leg (pump suction) guillotine break (Discharge coefficient, CD = 1.0)
- Double-ended cold leg (pump suction) guillotine break (C_D = 0.6)
- 3 ft^2 cold leg (pump suction) split break (C_D = 1.0)
- Double-ended hot leg guillotine break (C_D = 1.0)

Initial containment conditions chosen conservatively for the evaluations are listed in Table 6.2.1-4. Assumptions for the containment heat removal and the SI system operability are shown in Table 6.2.1-5. The inherent conservatisms in the assumptions made in the analyses regarding initial containment conditions and containment heat removal are as follows:

- Higher containment initial pressure gives higher air partial pressure and larger heat capacity in the containment atmosphere, which results in higher pressure and lower temperature during the postulated accident. Therefore, maximum initial pressure is assumed for the LOCA analyses, which gives the most severe containment peak pressure. Minimum initial pressure is assumed for the MSLB analyses, which gives the most severe containment temperature.
- Minimum relative humidity is assumed to give higher air partial pressure in the containment atmosphere, which results in higher pressure during the postulated accident.
- Containment initial temperature is assumed to be maximum, to give the highest temperature of the passive heat sinks, and the lowest heat removal from the containment atmosphere during the accident.
- The temperature of RWSP water and the service water is assumed to be design maximum to give minimum heat removal by the containment spray systems.
- RWSP water volume is assumed to be design minimum and does not include ineffective pool volume, so as to overestimate RWSP water temperature during the postulated accident.
- For the containment spray system it is assumed that one train is out of service and another train is lost based on the postulated single failure, which results in the loss of two out of four trains, to minimize containment heat removal.
- The containment spray system is assumed to actuate on the High containment pressure ECCS signal, with a conservative delay. The containment spray system total response time of 243 seconds includes emergency generator startup (for loss of offsite power), block loading of equipment, containment spray pump startup, and spray line filling, with a conservatively large response time assumed for each process. The High-3 containment pressure analytical limit of the containment spray actuation is usually reached before initiation of above containment spray start up time. If not, the containment spray response time is based on the time when the High-3 containment pressure is reached.

The conservatisms in the assumptions made in the LOCA analyses regarding ECCS operability are as follows:

- For the high head injection systems (HHIS), it is assumed that one train is out of service and another train is lost based on the postulated single failure. This results in the loss of two-out-of-four trains. Uncertainty of the SI system is conservatively accounted for in the SI characteristics. A sensitivity analysis confirms that these conditions are limiting, as described later.
- Minimum accumulator water volume and pressure, and maximum injection resistance are assumed to minimize steam condensation by the injected water. Sensitivity analyses confirm that these conditions are limiting, as described later.

The mass and energy flow rates associated with the LOCA are described in Subsection 6.2.1.3, in which the conservatisms in the assumptions for mass and energy release analyses are addressed.

Summary results for each LOCA analyzed are presented in Table 6.2.1-6. These results indicate that the double-ended pump suction guillotine (DEPSG) break, with a discharge coefficient C_D = 1.0 is limiting and the acceptance criteria related to the LOCA analyses are satisfied as follows:

- The design pressure provides at least a 10% margin above the peak calculated containment pressure.
- The containment pressure is reduced to less than 50% of the peak calculated pressure within 24 hours after LOCA.
- The peak containment atmospheric temperature is less than the design temperature.

Table 6.2.1-6 also lists the figures showing the containment pressure, average containment atmospheric temperature, and average RWSP water temperature for each LOCA analyzed.

Sensitivity studies to confirm the analytical conditions for HHSI and accumulator that result in maximum accident pressure and temperature are prepared for the limiting break condition. Table 6.2.1-7 shows the results for the sensitivity studies, listing the figures for the containment pressure, average containment atmospheric temperature, and average RWSP water temperature for each case analyzed. These results demonstrate the following:

- The minimum ECCS flow conditions result in maximum accident pressure and temperature.
- The accumulator water volume, pressure, and injection resistance assumed for the limiting case to minimize steam condensation, as described above, give the most severe results. These parameters, however, do not have large effect on the peak containment pressure and temperature.

For the MSLB events, a spectrum of pipe breaks and power levels are analyzed. The methodology, computer code and assumptions for the MSLB mass and energy release rates are describe in Subsection 6.2.1.4.

The assumptions made in the MSLB analyses regarding initial containment conditions and containment heat removal are as addressed above.

Table 6.2.1-8 summarizes the results of cases performed for various postulated secondary steam system piping break sizes and locations to determine the most severe containment pressure for secondary steam piping system failures. The assumptions made regarding the operating conditions of the reactor and single active failures are also listed in Table 6.2.1-8.

The figures illustrating containment pressure, average containment atmospheric temperature, and average RWSP water temperature, respectively, as a function of time for each case analyzed, are also listed in Table 6.2.1-8.

These results indicate that the MSLB events give much lower containment pressure than the LOCA events though they give much higher atmospheric temperature compared with the LOCA events.

Table 6.2.1-9 lists information relating to structural heat sinks within the containment used in these analyses. Data for both metallic and concrete heat sinks are presented. Table 6.2.1-10 presents material properties of the passive heat sinks. The mesh spacing for the heat sinks is automatically set fine enough to accurately model the internal temperature profile, as described in Subsection 6.2.1.1.3.3. The steel-concrete interface resistance used for steel-lined concrete heat sinks and the containment shell is set to be conservatively high by assuming conduction through the air gap to underestimate the heat transfer rate. The condensing heat transfer coefficients as a function of time for the most severe cold leg (pump suction), hot leg, and steam line pipe breaks are graphically illustrated in Figure 6.2.1-66 through Figure 6.2.1-68.

Table 6.2.1-11 lists selected key events and the times at which they occur following initiation of the transient for the most severe RCS pump suction pipe break. Table 6.2.1-12 lists the distribution of energy at various locations within the containment prior to the event and at certain key times during the transient. Figure 6.2.1-84 provides a graphic display of the integrated energy content of the containment atmosphere and recirculation water, as functions of time. This figure includes also the integrated energy absorbed by the structural heat sinks and removed by the containment spray heat exchangers.

Table 6.2.1-13, Table 6.2.1-14 and Figure 6.2.1-85 provide similar data for the most severe hot leg pipe breaks. As for the steam line break analyses, Table 6.2.1-15 and Table 6.2.1-16 list selected key events for the cases giving the highest containment pressure and the highest containment atmospheric temperature, respectively.

The model utilized in the GOTHIC code for determining the distribution of mass and energy from the postulated breaks in the containment atmosphere and sump can be summarized as follows:

- When the liquid temperature from the break is higher than the saturation temperature in the containment at the total pressure, then liquid from the break is assumed to boil and be divided into the saturated steam and the saturated liquid.
- The separated liquid is injected as droplets with a diameter of 0.004 in. This diameter is small enough to ensure that the droplets reach thermal equilibrium with the containment atmosphere before entering the liquid phase at the bottom of the containment. This assumption maximizes the amount of steam generated from the break flow.

The instrumentation provided to monitor and record containment pressure, temperature, and RWSP water temperature during the course of an accident within the containment is described in Section 7.5.

6.2.1.1.3.5 External Pressure Analysis

In the event of inadvertent spray actuation, PCCV would depressurize until the air becomes approximately the temperature of the spray. A calculation was performed to calculate the maximum outside to inside differential-pressure.

The following conditions were assumed:

a. The air temperature inside PCCV is initially 120°F, which maximizes the temperature differential between the containment atmosphere and the spray, which is at a temperature of 32°F
b. The PCCV pressure is at –0.3psig
c. The relative humidity is at a maximum value of 100%

As the air temperature is reduced, the partial pressure of air decreases from 12.692 psia to 10.765 psia. The steam partial pressure decreases from 1.704 psia to 0.089 psia as the spray condensates steam and cools the atmosphere.

A PCCV pressure of 10.854 psia is produced, causing a differential pressure of 3.842 psig across PCCV, which is lower than the design external differential pressure.

6.2.1.2 Containment Subcompartments

Several reactor system components are located within subcompartments in the containment vessel. High-energy lines are routed inside the subcompartments, such as the branch lines from the reactor coolant piping, feedwater piping, and steam generator blowdown lines.

6.2.1.2.1 Design Basis

To comply with GDC 4 and 50 of 10 CFR 50, Appendix A (Ref. 6.2-14), subcompartments within the containment are designed to withstand the transient differential pressures due to a postulated pipe break.

The US-APWR has the following subcompartments inside the containment:

- Reactor cavity
- Steam generator (SG) subcompartments
- Pressurizer subcompartment
- Pressurizer surge piping room (Underneath the Pressurizer subcompartment, EL. 25 ft.- 3 in.)
- Pressurizer spray valve room (South side of the Pressurizer subcompartment, EL. 50 ft.- 2 in.)
- Regenerative heat exchanger room (Northwest side of the SG subcompartment, EL. 50 ft.- 2 in.)

- Letdown heat exchanger room (South side of the Pressurizer subcompartment, EL. 25 ft.- 3 in.)

Some piping segments of the US-APWR are classified as leak-before-break (LBB). For these components, it is not necessary to analyze the dynamic effects of a postulated pipe rupture, including pipe whip, jet impingement loads, and subcompartment pressurization. Chapter 3, Subsection 3.6.3, discusses LBB criteria and evaluation procedures. One of the subcompartments that does not need to be analyzed is the pressurizer surge piping room, because the pressurizer surge line is classified as LBB.

Analyses are performed to conservatively calculate the peak differential pressure following the most severe specified pipe rupture for each subcompartment. The calculated value is then compared to a differential pressure representing the structural capability of the subcompartment walls, to show the peak differential pressure is within structural capabilities. These analyses are performed using a detailed evaluation model employing the GOTHIC computer program (Ref. 6.2-1).

The evaluation of these postulated subcompartment piping breaks is described in Subsection 6.2.1.2.3. Subsection 6.2.1.2.3 also describes the basis for the selection of the postulated pipe breaks that are analyzed in detail for each subcompartment. This selection process factors in the LBB assessments described in Chapter 3, Subsection 3.6.3.

The US-APWR design does not rely on piping restraints to limit the break area of potential high-energy piping failures within these subcompartments.

6.2.1.2.2 Design Features

Plan and elevation drawings of the subcompartments, component, equipment, vent locations and high energy line locations used in the GOTHIC model are provided below.

Vent paths such as openings in the walls, floor gratings, etc are considered in the subcompartment analysis. Vent paths created by the postulated pipe rupture as a result of insulation collapsing are not credited in the analysis.

Reactor Cavity

The reactor cavity consists of a cylindrical narrow gap between the reactor vessel and the concrete primary shield wall, the space under the reactor vessel, and the reactor cavity access tunnel. The area under the reactor vessel is designed to hold molten core debris in case of a Severe Accident (See Figure 6.2.1-70 and Figure 6.2.1-71). In the reactor cavity, four direct vessel injection (DVI) pipes are connected to the reactor vessel at elevation 35 ft.- 3 in. The reactor vessel nozzles are considered as the termination points for the high-energy piping. Subcompartment analysis is required for the reactor cavity, as a 4-inch pipe break therein is assumed.

The reactor cavity has multiple vent paths which are capable of discharging the accident pressure surge into the containment atmosphere. The pressure generated from the pipe break is assumed to discharge to the SG subcompartment through the reactor coolant

pipe sleeves (EL. 40 ft.- 4 in.) which penetrate the primary shield wall. The SG subcompartment is open to the containment atmosphere. The pressure is also vented to the bottom chamber through the gap between the reactor vessel and the primary shield wall, through the pressurizer surge pipe room (EL. 25 ft.- 3 in.), then through the two vertical vent openings and the personnel access. The pressurizer surge pipe room is open to the SG subcompartment.

Steam Generator Subcompartment

Steam generator (SG) subcompartments are composed of the secondary shield walls surrounding the primary loops from the SGs, and are open at the top of each subcompartment (see Figure 6.2.1-72 and Figure 6.2.1-73). The subcompartment walls are designed to protect equipment in other parts of the containment from postulated pipe ruptures inside the subcompartment. High-energy lines are routed in the subcompartment, such as the branch lines from the reactor coolant piping, feedwater piping, and steam generator blowdown lines. The subcompartment analysis is performed by assuming a 6-inch diameter break of the pressurizer spray line connected to the reactor coolant piping (cold leg at EL. 40 ft.- 4 in.), or a 16-inch feedwater pipe (EL. 90 ft.- 9 in.), as the worst case.

The subcompartment has an entrance opening for each quadrant at elevations 25 ft.- 3 in. and 50 ft.-2 in. These entrances and the open top of the subcompartment are assumed in the analysis as the vent openings that mitigate the accident pressure surge caused by the postulated pipe break.

Pressurizer Subcompartment

The pressurizer subcompartment houses the pressurizer and is located inside a secondary shield wall at elevation 58 ft.- 5 in. The worst-case postulated pipe break in the subcompartment assumes that the 8-inch pressurizer pressure relief line which connects to the top of the pressurizer fails (EL. 122 ft.- 6 in.).

While the top of the subcompartment is covered by a concrete ceiling, two personnel accesses are provided for the purpose of maintenance and inspection of the pressurizer relief valve, as shown in Figure 6.2.1-74 and Figure 6.2.1-75. The discharge pressure from the accident is vented into the containment atmosphere through these openings. An entrance from the SG subcompartment is also provided at the bottom of the Pressurizer subcompartment, at elevation 58 ft.- 5 in.

Pressurizer Surge Piping Room

The pressurizer surge piping room is located underneath the pressurizer room at elevation 25 ft.- 3 in. Since the LBB is applied for the 14-inch pressurizer surge pipe, a postulated pipe break is not considered in this subcompartment (See Figure 6.2.1-70).

The following subcompartments are not evaluated since the vent paths are large compared to the line sizes. These conditions, in perspective to the compartment structural capacity, will not result is significant differential pressure between the subcompartment and the containment atmosphere.

Pressurizer Spray Valve Room

Pressurizer spray valve rooms are located outside the secondary shield wall, and adjacent to the pressurizer subcompartment at elevation 50 ft.- 2 in. These rooms are intended to provide access to the pressurizer spray control valves. The worst-case postulated pipe break in the valve room assumes a 6-inch pressurizer spray pipe break that connects to the top of the pressurizer (See Figure 6.2.1-76 and Figure 6.2.1-77). The personnel access to the subcompartment is the vent path to the containment atmosphere.

Regenerative Heat Exchanger Room (Northwest of SG Subcompartment, EL.50'-2")

The regenerative heat exchanger room is located outside secondary shield walls, at elevation 50 ft.- 2 in. (See Figure 6.2.1-78). High-energy lines associated with the chemical volume and control system (CVCS), considered as the postulated pipe break, are routed through the room. The worst-case pipe break assumes a 4-inch pipe break at the heat exchanger nozzle. The personnel access to the room and additional openings are the vent paths to the containment atmosphere.

Letdown Heat Exchanger Room (South Side of Pressurizer Subcompartment, EL.25'-3")

The letdown heat exchanger room is located outside the secondary shield walls, at elevation 25 ft.- 3 in. (See Figure 6.2.1-79). A high-energy line routed in the room, associated with CVCS, is considered as the postulated pipe break. The worst-case pipe break is assumed to be a 4-inch pipe at the heat exchanger nozzle. The personnel access and additional vent openings are the vent paths to the containment atmosphere.

6.2.1.2.3 Design Evaluation

The GOTHIC computer code is used for the subcompartment differential pressure analysis (Subsection 6.2.1.1.3.1 and Ref. 6.2-1).

Mass-energy releases used for subcompartment analyses are basically calculated by the approach to assume a constant blowdown profile using the initial conditions with an appropriate choked flow correlation (Ref. 6.2-15). The analytical approach with the computer code and volume noding of the piping system similar to those of small-break LOCA analyses is used for some subcompartments, depending on the margin of the design pressure (Ref. 6.2-16).

Initial plant operating conditions assumed for mass and energy releases are the same as those described in Subsections 6.2.1.3 and 6.2.1.4 for postulated primary and secondary piping breaks, respectively.

The initial atmospheric conditions within a subcompartment are set to maximize the resultant differential pressure according to Standard Review Plan (SRP) 6.2.1.2 (Ref. 6.2-17). Air at the maximum allowable temperature, minimum absolute pressure, and zero percent relative humidity is assumed.

Assumptions with regard to the distribution of mass and energy release are biased towards maximizing the subcompartment pressure, conforming to SRP 6.2.1.2. Although the GOTHIC code solves conservation equations for up to three fields (i.e., steam/gas mixture, continuous liquid and liquid droplet), the vent flow behavior through all flow paths within the nodalized compartment model is treated as a homogeneous mixture in thermal equilibrium, with the assumption of 100-percent water entrainment by applying code options to force thermodynamic and velocity equilibrium and prevent the deposition of drops in the volumes. The homogeneous equilibrium is used for vent choking.

The evaluation models do not take credit for the vent areas that change during the transient as a result of insulation collapsing.

A separate GOTHIC evaluation model is prepared for each subcompartment. In these models, each subcompartment is divided into nodes, with paths defined to model the transfer of mass and energy between nodes during the analyzed transient. The subcompartment nodalization scheme is selected so that nodal boundaries are at the location of flow obstructions or geometry changes within the subcompartment. These discontinuities create pressure differentials across nodal boundaries. Within each node, no significant discontinuities exist, resulting in a negligible pressure gradient within each node. A sensitivity study that increases the number of nodes until the peak calculated pressures converge (i.e., increase in the number of nodes results in small pressure changes) is conducted to verify the nodalization scheme.

A list of high-energy lines within each subcompartment is developed. For each subcompartment, the high-energy lines excluded from pipe rupture considerations for dynamic effects from postulated pipe failure due to application of the LBB criterion discussed in Subsection 3.6.3 are excluded from consideration in the subcompartment analysis. The remaining lines are grouped according to the pressure and temperature of the fluid in the line. Certain lines may be excluded from further analysis on a qualitative basis (i.e., the mass and energy of the lines located in the subcompartment are compared, to eliminate those lines that clearly do not challenge the bounding failure). A detailed pipe break simulation is performed for the largest diameter line in each group in each subcompartment from the lines that remain under consideration. Table 6.2.1-17 provides information about the pipes considered for evaluation of the SG subcompartment, pressurizer subcompartment and subcompartment under pressurizer subcompartment .

The analyses generate the mass and energy release as a function of time, the pressure response as a function of time, and the flow conditions (sonic or subsonic) for all vent paths up to the time of peak pressure. This information is generated for each subcompartment for the postulated pipe breaks selected using the methodology above.

The structural design differential pressure of each subcompartment is determined from MHI's PWR design experience in Japan. The calculated peak differential pressures during the piping break transients for each subcompartment are compared to the structural design differential pressures described in subsection 3.8.3.3. This comparison demonstrates that the subcompartment walls withstand the peak differential pressures during postulated breaks of any high-pressure line within any subcompartment.

Reference 6.2-18 describes results of the analyses including detailed analytical conditions and the sensitivity study related to the number of nodes.

6.2.1.3 Mass and Energy Release Analysis for Postulated Loss-of-Coolant Accidents

A postulated loss-of-coolant accident (LOCA) transient is typically divided into the following four phases:

(1) Blowdown phase - which includes the period from accident initiation (when the reactor is operated at full power) to the time that the RCS pressure reaches equilibrium with containment.

(2) Refill phase - the period when the lower plenum is being filled by ECCS injection water up to the bottom of the core. This period is conservatively ignored to maximize the release rate to the containment in the evaluation model described later.

(3) Core reflood phase - begins when the water from the lower plenum enters the core and ends when the core is completely quenched.

(4) Long-term cooling phase - describes the period after the core has been quenched and energy is released to the containment via reactor coolant by the RCS metal, core decay heat, and the steam generators.

The mass and energy release is evaluated by a model based on the SATAN-VI(M1.0), WREFLOOD(M1.0), and GOTHIC computer codes. This evaluation model, which covers the blowdown, refill, core reflood, and long term cooling phases associated with these accidents, is described in Reference 6.2-4. Reference 6.2-4 also describes modifications made to the SATAN-VI and WREFLOOD computer programs to model advanced features incorporated into the US APWR design. The computer programs with these modifications are referred to as SATAN-VI(M1.0) and WREFLOOD(M1.0), respectively.

6.2.1.3.1 Break Size and Location

The containment receives mass and energy releases following a postulated LOCA. Three distinct locations in the reactor coolant system (RCS) loop can be postulated for pipe rupture:

- Hot leg (between reactor vessel and steam generator)
- Cold leg (pump discharge: between reactor coolant pump and reactor vessel)
- Cold leg (pump suction: between steam generator and reactor coolant pump)

The following is a discussion on each break location.

A double-ended hot leg guillotine (DEHLG) break potentially results in the highest blowdown mass and energy release rates, because it results in the largest heat transfer

from the core due to the minimum flow resistance between core outlet and the break location. Although the core flooding rate also would be highest for this break location, the amount of energy released from the steam generator secondary side is minimal because the majority of the fluid which exits the core bypasses the steam generators in venting to the containment. As a result, the reflood mass and energy releases are reduced significantly as compared to either the pump suction or pump discharge cold leg break locations, where the core exit mixture must pass through the steam generators before venting through the break. Therefore the reflood and subsequent post-reflood releases are not typically calculated for a hot leg break for plants similar to the US-APWR. The mass and energy releases for the hot leg break blowdown phase are included in the scope of the containment integrity analysis.

The double-ended cold leg guillotine pump discharge (DECLG) break location is much less limiting in terms of the overall containment peak pressure than the double-ended pump suction guillotine break (DEPSG). The DECLG break blowdown is faster than that for the DEPSG and more mass is released into the containment. However, the core heat transfer is greatly reduced, and this results in a considerably lower energy release into containment.

During the core reflood phase, due to the maximum flow resistance between core outlet and the break location, the flooding rate and the amount of energy released from the broken-loop steam generator secondary side are much less than for the DEPSG break. This results in a much lower energy release rate into the containment.

Also, during the long-term cooling phase, the energy release rate into the containment is less than that of the DEPSG break. This is because of larger flow resistance between the core outlet and break location, which results in reduced energy released rate from the steam generator secondary side. Therefore, the DECLG break is usually not selected for performance of a containment analysis.

The DEPSG break combines the effects of the relatively high core flooding rate, as in the hot leg break, and the addition of the stored energy from the steam generators. As a result, the DEPSG break yields the highest energy flow rate during the post-blowdown period by including all of the available energy of the RCS in calculating the releases to containment. This break location is the limiting break for typical dry containment plants and is the limiting break location for the US-APWR.

The spectrum of breaks analyzed includes the largest hot leg breaks and a range of cold leg (pump suction) breaks from the largest down to 3.0 ft^2. Small pump suction breaks are representative cases for the spectrum of break size, because the DEHLG and DECLG breaks are much less severe than DEPSG break as discussed above.

6.2.1.3.2 Mass and Energy Release Data

Table 6.2.1-18 and Table 6.2.1-19 present the calculated mass and energy releases for the blowdown phase of the break analyzed for the double-ended pump suction and DEHLG breaks, respectively.

Table 6.2.1-20 presents the calculated mass and energy release for the reflood phase of the DEPSG break with minimum safety injection. The DEHLG break is evaluated only for the blowdown phase as described in the preceding subsection.

Table 6.2.1-21 presents the long-term cooling phase mass and energy release data for the DEPSG break with minimum safety injection.

The safety injection is directed to the downcomer and does not spill from the break directly to the containment floor.

6.2.1.3.3 Energy Sources

The following are taken into account as energy sources in the LOCA mass and energy calculation:

- Decay heat
- Core stored energy
- Reactor coolant system fluid and metal energy
- Steam generator fluid and metal energy
- Accumulators
- Refueling water storage pit (RWSP)
- Metal-water reaction (described in Subsection 6.2.1.3.8)

The methods and assumptions to conservatively calculate energy available for release from these sources are described in Reference 6.2-4. The conservatism in the calculation of the available energy for each source is addressed as follows:

- Margin in volume of 3 percent (which is composed of 1.6 percent allowance for thermal expansion and 1.4 percent for uncertainty)
- Allowance for calorimetric error (+2 percent of core power)
- Maximum core stored energy considering fuel burn-up and uncertainty in the calculation of fuel temperature
- Margin in core stored energy (+20 percent)
- Maximum expected operating temperature of the reactor coolant system
- Allowance in RCS fluid temperature for instrument error and dead band (+4.0°F)
- Allowance for RCS pressure uncertainty (+30 psi)
- Maximum steam generator mass inventory
- Metal-water reaction from one percent of the zirconium in the active core cladding

The stored energy sources and the amounts of stored energy are listed in Table 6.2.1-24. The curves for the energy release rate and integrated energy released for the decay heat are shown in Figure 6.2.1-69.

The consideration of the various energy sources in the mass and energy release analysis provides assurance that all available sources of energy are included in this analysis. Thus, the review guidelines presented in SRP Subsection 6.2.1.3 are satisfied.

6.2.1.3.4 Description of the Blowdown Model

A description of the model used to determine the mass and energy released from the RCS during the blowdown phase in a postulated LOCA is provided in Reference 6.2-4. All significant correlations are discussed.

6.2.1.3.5 Description of the Core Reflood Model

A description of the model used to determine the mass and energy released from the reactor coolant system during the reflood phase of a postulated LOCA is provided in Reference 6.2-4. All significant correlations are discussed.

6.2.1.3.6 Description of the Long-Term Cooling Model

The calculation procedures used to determine the mass and energy released during the post-reflood phase of a postulated LOCA are described in Reference 6.2-4.

6.2.1.3.7 Single Failure Criteria

Loss of offsite power (LOOP) is assumed in the analyses of mass and energy release. When the LOOP is assumed, the safety injection (SI) system is not credited for the blowdown period. It is assumed that one train of the Engineered Safety Features (ESF) is out of service. The single active failure that maximizes the energy release to the containment is the failure of one additional ESF.

This results in the loss of two trains of safeguards equipment. A sensitivity analysis is performed on the effects of the single-failure criterion for the limiting break. The sensitivity case assumes maximum safeguards SI flow where four trains are available. Uncertainty of the SI system is also taken into account conservatively for both the minimum and maximum safeguards SI characteristics. This sensitivity analysis provides confidence that the effect of credible failure is bounded.

6.2.1.3.8 Metal-Water Reaction

The LOCA analysis, presented in Chapter 15, demonstrates compliance with 10CFR 50.46 criteria. It shows that the cladding temperature does not rise high enough for the rate of the metal-water reaction heat to be of any significance. However, the energy release associated with the reaction from 1 percent of the zirconium in the active core cladding, which is one of the acceptance criteria for the LOCA analysis in Chapter 15, has been considered. This results in additional conservatism in the mass and energy release calculations since the actual whole core oxidation presented in Chapter 15 is

much lower. The oxidation occurs before the whole core is quenched and the metal-water reaction time is assumed to occur during the blowdown phase through the reflood phase.

6.2.1.3.9 Energy Inventories

The total mass and energy transferred from the primary and secondary systems to the containment, as well as the energy remaining in the primary and secondary systems for each source, are presented in Table 6.2.1-12 and Table 6.2.1-14. These values are for the worst cold-leg pump suction and hot-leg pipe breaks at the following times:

- Time zero (initial conditions).
- End of blowdown time.
- End of reflood time.
- Time of peak pressure.
- Time of full depressurization (1 day or End of Analysis).

6.2.1.3.10 Additional Information Required for Confirmatory Analysis

Table 6.2.1-22 lists elevations, flow areas and hydraulic diameters within the primary system that are used for these analyses to enable confirmatory analyses to be performed.

The SI flow rate as a function of time is presented in Table 6.2.1-23 for the worst DEPSG break.

6.2.1.4 Mass and Energy Release Analysis for Postulated Secondary-System Pipe Ruptures Inside Containment

This section describes the analysis used to define the mass and energy release input data for evaluating the containment response to a variety of main steam system pipe breaks. Because the containment response to the main feedwater pipe ruptures is not limiting with respect to either temperature or pressure, the mass and energy release analysis in this section is presented for only the main steam system pipe breaks inside containment. The mass and energy release analysis performed on the nuclear steam supply system (NSSS) is separate from the containment response analysis. Different sets of assumptions regarding single failures and availability of offsite power may be made for these two analyses for the purpose of assuring that the analyzed containment response bounds combinations of plant operating conditions, break characteristics, and pertinent combinations of assumed failures.

6.2.1.4.1 Sequence of Events and Effects of Transient Phenomena

This section describes the expected sequence of events and system response to the accident. Analysis assumptions and inputs are discussed in Subsection 6.2.1.4.2.2.

Steam system piping failures inside the reactor containment could cause releases of high-energy fluid to the containment interior, which may cause high containment temperatures and pressures. The temperature and pressure response of the containment depends on the time-dependent mass flow and enthalpy of the break effluent added to the containment (mass and energy release). A mass and energy release transient that results in the limiting containment peak pressure may not be the same transient that results in the limiting peak temperature. To assure that the containment response is bounding, a number of mass and energy release cases are defined and analyzed, representing a wide spectrum of plant operating conditions (initial power, availability of offsite power), in conjunction with a wide spectrum of size, type and locations of the piping failure.

In order to understand the basis for selecting the specific cases included in this analysis, an understanding of the double-ended guillotine break (DEGB) and the split break is essential.

A DEGB is a break in a main steam line inside containment where the steam line breaks circumferentially and separates so that the blowdowns from the two ends are independent. Because the steam lines are connected to a common header outside containment, a single steam generator would blow down into containment through one pipe end and the others would blow down into containment through the other, ignoring main steam check valves. The US-APWR design includes a uni-directional main steam isolation valve in series with a main steam check valve in each steam line downstream of the containment penetration. In addition, each steam generator is equipped with a flow restrictor integral to the steam generator outlet nozzle having a flow area of 1.4 ft^2. If all of the valves were to function as designed, only the affected steam generator would blow down to the containment due to the main steam check valve in its steam line. This analysis assumes the failure of the steam line check valve. With that assumption, the “intact” steam generators also blow down to the containment through the flow restrictors, and the other end of the DEGB, until they are isolated by their main steam isolation valves.

A split break is a break in a steam line that does not result in circumferential failure or separation of the pipe at the break location. If a split break were to occur in one of the steam lines (again assuming the failure of its main steam check valve), all of the steam lines would “share” its total break area prior to steam line isolation. Only the faulted loop would blow down through the break after steam line isolation. The effective break sizes for the faulted loop and intact loops would depend on the size of the split break relative to the steam generator flow restrictor.

Another important factor in defining the representative and limiting cases to analyze for mass and energy release is the automatic steam line isolation logic and its response to breaks of different sizes. A steam line isolation signal results from a low main steam line pressure in any loop, or a high-high containment pressure. The time for a low main steam line pressure signal to occur is shortened for increasing negative steam line pressure rates. The rate of pressure change is dependent on the break size. For the DEGBs, the low steam line pressure provides an immediate steam line isolation signal. The time to close the main steam isolation valves (MSIVs) includes the time when the

analytical limit is reached (depending on the break size), plus signal delay time, plus valve closure time.

Larger split breaks will also result in a low main steam line pressure signal before the high-high containment pressure signal occurs. As the split break area is decreased, the times of the steam line isolation signals on low main steam line pressure and high-high containment pressure will approach each other. The largest break areas which will not generate a steam line isolation signal from a low main steam line pressure are different at different initial power levels, due to differences in the blowdown transients. Breaks smaller than this critical area are less limiting due to their more gradual containment pressure increase, and breaks larger than this area will be less limiting due to the shorter duration of the contribution of the intact loops to the containment mass and energy release.

As a result, the cases selected to be analyzed include the DEGB at various power levels from hot standby to 102% of full power (in 25% increments), the limiting split breaks (based on the discussion above) at zero and full power, and the DEGBs at zero and full power assuming a loss of offsite power.

These cases are defined and summarized in Table 6.2.1-25.

A typical progression of a DEGB from hot standby as it relates to mass and energy release to containment is as follows.

The DEGB results in an instantaneous initial increase in steam flow, which gradually decreases during the accident as the steam pressure falls. The energy removal from the reactor coolant system (RCS) causes a reduction in coolant temperature and pressure. In the presence of a negative moderator temperature coefficient, the cooldown results in an insertion of positive reactivity. The effect is the largest at the end-of-cycle. The cooldown and associated positive reactivity addition may be sufficient to cause the core to return to power with all the rod cluster control assemblies (less the most reactive rod) fully inserted. In the analysis, the main steam check valve is assumed to fail in the faulted loop. The blowdown to containment is uniform with an effective break area of 1.4 ft^2 per loop, three loops blowing down through one end of the pipe, and the remaining steam generator blowing down through its steam line. The sudden decrease in steam line pressure results in an immediate steam line isolation signal on low main steam line pressure. The same signal also actuates the emergency core cooling system (ECCS). The ECCS signal also isolates the main feedwater and actuates the emergency feedwater (EFW).

After steam line isolation, the affected steam generator continues to blow down through the faulted steam line. Assumptions are made for various input parameters to maximize heat generated in the RCS or transferred to the RCS, to maximize heat transferred to the affected steam generator secondary fluid, and to minimize the cooldown of the faulted and intact steam generators. Following steam line isolation, the RCS cooldown becomes non-uniform, and assumptions for various input parameters are made to maximize heat transferred to the affected steam generator and allow the intact steam generators to transfer heat back to the RCS. The EFW flow to the affected steam

generator is automatically isolated. The mass and energy release is terminated when the secondary inventory is depleted.

The core is ultimately shut down by a combination of the high concentration boric acid water delivered by the ECCS and the termination of the cooldown when the steam generator inventory is depleted. Core response and shutdown after the affected steam generator blows down is not of concern in this analysis.

DEGB cases initiating from at-power conditions behave in a similar manner, except that the reactor is tripped, shut down, and returns to power. A higher initial core power generates increased decay heat and release of stored heat from both RCS and SG metal. In addition, the decrease in initial steam generator water mass as initial power level increases affects the rate and duration of the blowdown.

The loss of offsite power cases are very similar, but result in less heat transfer from the affected steam generator. The ECCS signals generated from low pressurizer pressure, low main steam line pressure, or high containment pressure, trip the reactor coolant pumps (RCPs). The RCP trip is ignored for the cases with offsite power available to maximize the RCS cooldown and associated reactivity and return-to-power response.

The split breaks differ from the DEGBs in that steam line isolation, ECCS, and the other engineered safety feature functions do not occur immediately. Due to their smaller break flow, the response of these breaks results in a smaller cooldown and return to power, but a more prolonged blowdown due to the later steam line isolation time and continued addition of feedwater prior to steam line and feedwater isolation.

For at-power cases, the following signals are assumed to be available to automatically trip the reactor (but are not necessarily credited in the analysis):

- ECCS actuation (low main steam line pressure in any loop, low pressurizer pressure, or high containment pressure)
- Over power ΔT
- Over temperature ΔT
- Low pressurizer pressure
- High power range neutron flux

In addition to the reactor trips listed above, the following engineered safety feature functions are assumed to be available to mitigate the accident:

- Main steam line isolation
- Main feedwater isolation
- EFW isolation on the affected SG
- ECCS

Also, the main steam check valves are provided downstream of the main steam isolation valves to prevent blowdown of the steam generators by reverse flow through the postulated piping failure in the event the break is upstream of a main steam check valve. The main steam isolation valves, which provide positive flow isolation in the normal direction of flow, are fully closed by the following signals:

- Low main steam line pressure
- High main steam line pressure negative rate
- High-high containment pressure

Only safety related equipment is credited in the analysis to mitigate the consequences of this event. As discussed above, some of the available equipment is not credited in the analysis.

6.2.1.4.2 Steam System Performance during the Postulated Blowdown Transient

6.2.1.4.2.1 Evaluation Model

The mass and energy release from a postulated steam piping failure (main steam line break) is evaluated with a model based on the MARVEL-M plant transient analysis code (Ref. 6.2-19). The evaluation model for the mass and energy release analysis of the main steam line break is the same as described for the core response to the same event in Subsection 15.1.5.3.1, except that for code inputs reflecting certain conservative assumptions made for the two different analyses. Key elements of the MARVEL-M model related to the mass and energy release analysis for the main steam line break that differ from the description in Subsection 15.1.5.3.1 are described in the following paragraphs.

For calculating mass and energy releases, a reverse steam generator heat transfer model is used to transfer heat back to the primary side from the intact steam generators after steam line isolation occurs to maximize the mass and energy release to containment from the faulted loop. In addition, the unisolated volume of the main feedwater line is modeled to consider feedwater flashing, providing additional feedwater to the affected steam generator.

The reactor trip system, engineered safety features (ESF) actuation system, and the ESF sub-systems credited in the steam line break mass and energy release analyses are modeled in the MARVEL-M code. Because MARVEL-M models only the NSSS, containment vessel response and the ESF containment signals are not directly modeled in the MARVEL-M code. ESF signals generated from containment pressure signals credited in the MARVEL-M mass and energy release analysis for certain breaks are obtained from the containment response analysis and manually input to MARVEL-M.

Additional details on selected MARVEL-M capabilities used in the steam line break mass and energy release analysis are described with applicable input parameters in the following subsection.

6.2.1.4.2.2 Input Parameters and Initial Conditions

The following input parameters and initial conditions are used in the MARVEL-M analysis. Unless otherwise stated, these inputs are common to all of the steam line break mass and energy analysis cases.

- To reduce the number of cases analyzed, failures were combined to create a set of limiting composite cases rather than evaluate a larger number of individual cases each characterized by a single failure. As a result, a Failure Modes and Effects Analysis is not needed or used to document how single failures are evaluated to determine the limiting single failure. The failures assumed in each of the composite cases are identified in Table 6.2.1-25, and are individually discussed below.

- The initial values of reactor power are 0%, 25%, 50%, 75%, and 102% for the hot standby and at-power cases. Because the intermediate power cases are run for the purpose of establishing sensitivity of the results to initial power level, the actual power level (without uncertainty) is used. For the full-power cases, a 2% uncertainty is added to the initial power to maximize the heat generated in the primary system.

- The nominal value of reactor coolant pressure, 2,250 psia, is used for the hot standby cases. For the at-power cases, an uncertainty of 30 psi is added. Unlike the departure from nucleate boiling ratio (DNBR) core response analysis for this event, RCS pressure is not a key parameter in the mass and energy release analysis. Similarly, the initial pressurizer water level is not a key parameter and is assumed to be at the programmed value associated with the initial power.

- The initial value of reactor coolant average temperature is assumed to be the 557°F no-load temperature for the hot standby cases. For the at-power cases, an uncertainty of 4°F is added to the normal expected average temperature corresponding to the power level.

- The shutdown margin is assumed to be 1.6% $\Delta k/k$ corresponding to the most restrictive time in the core cycle, with the most reactive rod cluster control assembly (RCCA) in the fully withdrawn position for the cases initiating from hot standby. For the at-power cases, the reactor trip reactivity is assumed to be the value that would result in this same shutdown margin at zero power conditions.

- For the cases initiating from hot standby, the moderator defect follows the relationship defined by Figure 15.1.4-1 and the Doppler defect follows the relationship defined by Figure 15.1.4-2 for the steam line break core response analysis in Subsection 15.1.5. For the full-power cases, the moderator density coefficient is assumed to have the maximum value as defined in Subsection 15.0.2.4 and the Doppler power coefficient is assumed to be the minimum feedback limit shown in Figure 15.0-2. For the intermediate power cases (25%, 50%, & 75%), the moderator defect follows the relationship defined by Figure

15.1.4-1 and the Doppler power coefficient is assumed to be the minimum feedback limit shown in Figure 15.0-2. These combinations result in the greatest positive reactivity and maximum power increase.

- Although the safety injection performance has little effect on the mass and energy releases, minimizing the addition of boron is conservative. Consistent with this assumption, only two safety injection pumps operate to inject borated water from the refueling water storage pit (RWSP) into the reactor vessel downcomer. This treatment is consistent with one train assumed to fail and a second train is out of service. The boron concentration in the RWSP is assumed to be 4000 ppm, corresponding to the minimum allowable Technical Specification boron concentration value.

- A dry steam blowdown (steam quality = 1.0) is assumed. This assumption maximizes the energy released from the break. The Moody curve for f(L/D) = 0 is used for calculating the steam flow from the break (Ref. 15.1-4).

- Feedwater flow to the affected steam generator is assumed considering increased feedwater pump flow caused by the reduction in steam generator pressure as follows:
  For the double-ended break, main feedwater flow is assumed to be the maximum flow based on the assumption that the steam generator is at atmospheric pressure. For split breaks, main feedwater flow is assumed to match the total steam flow (including the break flow) in each steam generator until main feedwater isolation occurs. This maximizes the steam generator mass available to be released to the containment. In all cases, the maximum feedwater enthalpy consistent with the initial power is assumed.

- EFW is assumed to be initiated at the time of the ECCS signal (t = 0 is conservatively used for the DEGBs) and deliver flow at maximum flow to the affected steam generator for the purpose of maximizing the blowdown inventory. The maximum value for EFW enthalpy is assumed to maximize secondary side energy (all steam generators). The EFW is automatically isolated from the affected steam generator when the low main steam line pressure signal reaches the analytical limit.

- The mass and energy release analysis conservatively includes decay heat (maximum value) to maximize the energy addition to the RCS and the RCS temperature. The total decay heat is calculated in accordance with the methodology of ANS-5.1-1979.

- A reverse heat transfer coefficient is used to transfer heat from the secondary back to the primary when the steam generator temperature is warmer than the primary coolant in the steam generator tubes. This occurs in the intact steam generators after steam line isolation, and maximizes heat input to the primary, resulting in a more conservative mass and energy release.

- The steam generator heat transfer is not assumed to be reduced after steam generator level decreases below the top of the tubes. This maximizes the conservative effects described with the heat transfer coefficients above.

- Energy stored in certain RCS and steam generator metal is modeled, and is allowed to be transferred to the primary coolant in contact with it. This results in a more conservative mass and energy release.

- The faulted steam line is modeled on the loop with the pressurizer. This result in warmer pressurizer water flow being directed into the affected steam generator, resulting in a more conservative mass and energy release.

- Conservative assumptions for the trip simulation (trip reactivity curve, rod drop time, reactor trip system signal processing delays) are used in the analysis of at-power cases. RCCA insertion characteristics assumed in the analysis are described in Subsection 15.0.0.2.5. This results in a conservatively high integrated heat input to the RCS.

- For the large double-ended guillotine breaks, the reactor is assumed to automatically trip on the low main steam pressure signal (which also initiates ECCS, steam line isolation, and other EFW functions). For the smaller split breaks containment pressure signals are credited in the mass and energy analysis. An ECCS signal occurs on high containment pressure, which in turn trips the reactor, isolates main feedwater, and starts safety injection. Main steam flow is isolated by the high-high containment pressure signal. Table 15.0-4 summarizes the trip setpoints and signal delay times used in the analysis.

- For cases assuming availability of offsite power, the RCPs are assumed to operate for the entire duration of the mass and energy release transient. This is conservative because the RCPs add thermal energy to the RCS while they are running, maximize the primary cooldown (and associated return to power), and distribute the reverse heat transferred from the intact steam generators to the RCS. The US-APWR has an automatic RCP trip on an ECCS signal; this is ignored for the cases assuming offsite power available. For the cases analyzed without offsite power, the RCPs are assumed to trip on the ECCS signal (which occurs immediately after the break in the model for the cases evaluating offsite power).

- The failure of one main feedwater isolation valve is assumed. Because the main feedwater regulation valves and main feedwater isolation valves are redundant, a single failure of one of these valves does not affect the feedwater isolation function. Feedwater isolation from ECCS actuation is modeled in MARVEL-M, using the signal and valve closure delays provided in Tables 15.0-4 and 15.0-5. However, since feedwater flashing provides additional feedwater to the affected steam generator from the water remaining in the feedwater line, the unisolated volume of the main feedwater line from the feedwater regulation valve (upstream valve) to the steam generator is assumed.

- The main steam check valve is assumed to fail in the loop where the break inside containment occurs. This failure assumption results in all steam generators blowing down to the containment until steam line isolation occurs. This assumption is particularly important (and conservative) for the split breaks where steam line isolation does not occur immediately on low main steam line pressure, but rather, relies on containment pressure signals. Steam line isolation from ECCS actuation is modeled in MARVEL-M, using the signal and valve closure delays provided in Tables 15.0-4 and 15.0-5.

- Because each of the steam generators is equipped with a 1.4 ft^2 flow restricting nozzle in its outlet, and because the flow area of any individual steam line is greater than 4.2 ft^2 (three times the area of a flow restricting nozzle), the modeled break area for DEGBs, assuming the main steam check valve failure, is assumed to be 1.4 ft^2 per loop prior to steam line isolation and 1.4 ft^2 for the only the faulted loop after steam line isolation.

- For split breaks, the break area will be equally shared between the loops prior to steam line isolation (assuming a main steam check valve failure in the faulted loop). After steam line isolation, the break area is the lesser of the split break area and 1.4 ft^2 is applied to only the faulted loop steam generator.

- Initial steam generator water mass is calculated based on the normal level at the initial power plus both a steam generator level uncertainty and a steam generator mass calculational uncertainty.

- No operator actions are modeled in the mass and energy response analysis.

Table 6.2.1-25 lists specific assumptions used that differentiate each case.

6.2.1.4.2.3 Evaluation Results

Table 6.2.1-26 and Table 6.2.1-27 are tabulations of the mass and energy release data for the steam piping failure case resulting in the highest containment pressure and temperature.

The mass and energy release data to containment for the limiting pressure and temperature cases include the energy transferred from the primary system to the secondary system. The mass and energy releases assume dry (100% quality) steam, and no water entrainment is modeled. As a result, steam generator internal elevations, flow areas, and friction coefficients are not used in the simplified secondary side model in MARVEL-M. As a result, values for these parameters are not provided for use in performing confirmatory analysis. Main feedwater flow and enthalpy assumptions for the affected steam generator are described above in Subsection 6.2.1.4.2.2.

The containment pressure and temperature transients and peak temperature and pressure resulting from this mass and energy release data are analyzed separately and described in Subsection 6.2.1.1.3.

6.2.1.5 Minimum Containment Pressure Analysis for Performance Capability Studies of the Emergency Core Cooling System

The containment pressure and temperature responses, as well as the in-containment RWSP water temperature response, used for the ECCS performance analysis found in Subsection 15.6.5 are presented in Figure 6.2.1-80 through Figure 6.2.1-82.

6.2.1.5.1 Analytical models

The GOTHIC computer code is used to calculate the time dependent minimum containment backpressure for the ECCS performance evaluation in coping with a postulated LOCA (i.e., cold leg guillotine and split breaks). The ECCS performance to reflood and thereby cool the reactor core following a LOCA depends directly on containment pressure (i.e., the core flooding rate increases with increasing containment pressure). Subsection 6.2.1.1 clarifies that the US-APWR containment does pressurize during a large break LOCA. Therefore, analyses that produce the minimum possible containment backpressure are necessary in order to confirm the conservatism and validity of the ECCS performance evaluation.

A single volume model in GOTHIC is applied to calculate the containment pressure response, incorporating conservative volume parameters and multipliers on the heat transfer coefficients to anticipate uncertainties in the single volume approach. The modeling approach is similar to the containment integrity analysis described in Subsection 6.2.1.1.3.3 with some necessary modifications to conform with the 10CFR50, Appendix K requirements and those of Branch Technical Position 6-2 for minimum containment pressure analysis (Ref. 6.2-20).

As discussed in Subsection 6.2.1.1.3.3, a single volume containment model generally gives higher containment pressure than a subdivided model. However, for the US-APWR plant, incorporating in-containment RWSP, a single volume model gives much lower containment pressure by accounting for the heat transfer from containment atmosphere region to the RWSP, which is cooler than the atmosphere. The RWSP ceiling prevents direct heat transfer from the steam in the containment to the pool surface. However, the analysis assuming a single volume model ignores this heat transfer barrier. This maximizes the heat and mass transfer from atmosphere to the pool. Therefore, a single volume GOTHIC model for the heat transfer on the pool surface is used for the US-APWR minimum ECCS backpressure evaluation, in conjunction with acceptable models and input described in Branch Technical Position 6-2 (Ref. 6.2-20).

6.2.1.5.2 Mass and Energy Release Data

Table 6.2.1-28 presents the mass and energy releases including broken-loop accumulator spillage to containment for the DECLG break, as computed by the WCOBRA/TRAC (M1.0) code. The evaluation models which calculate the mass and energy releases to the containment are described in Subsection 15.6.5. A nominal DECLG break analysis is performed for the minimum containment pressure. Since WCOBRA/TRAC has a thermal non-equilibrium scheme, steam and liquid flow from vessel side break are combined and transferred to GOTHIC as a single mixture. The mixing minimizes the containment pressure due to the reduction of the available energy

released to the containment vapor space. Then, the conservatively low containment pressure is applied as a boundary condition in the analysis with the WCOBRA/TRAC code.

6.2.1.5.3 Initial Containment Internal Conditions

Initial containment conditions are biased properly for the ECCS evaluation so as to yield a conservatively low containment back pressure. The following initial values are used in the analysis:

Containment pressure (psia)	14.7 (minimum value)
Containment temperature (°F)	70 (minimum value)
RWSP water temperature (°F)	32 (minimum value)
Relative humidity (%)	100 (maximum value)
Service water temperature (°F)	32 (minimum value)
Outside temperature (°F)	-40 (minimum value)

The containment initial conditions of 70°F and 14.7 psia are representative of the low end of values anticipated during normal full-power operation. The initial relative humidity is conservatively assumed to be 100 percent. The initial temperature outside of the containment is assumed to be the lowest design value temperature The above values are consistent with Branch Technical Position 6-2 (Ref. 6.2-20).

6.2.1.5.4 Containment Volume

The volume used in the analysis is 2.86×10^6 ft^3. The estimated free volume is maximized to ensure conservative prediction of the minimum containment pressure. The volume of the internal structures and equipment is subtracted from the gross containment volume to arrive at the maximized net free volume, considering uncertainty.

6.2.1.5.5 Active Heat Sinks

The US-APWR employs the containment spray system (CSS) to maintain the containment vessel internal peak pressure below the design pressure and reduce it to approximately atmospheric pressure in a postulated LOCA or MSLB. For minimum pressure analysis, the assumption of maximum spray effectiveness is conservative. Maximum effectiveness is achieved by specifying the maximum available spray flow rate beginning at the earliest possible time assuming offsite power to be available independent of the ECCS performance evaluation. A small spray droplet size of 0.004 inch is also specified to insure high efficiency. Additional conservatism is included by setting the incoming spray water temperature to the minimum possible value (32ºF) regarded as identical with the minimum service water temperature. Conditions for the ESFs used in the analysis are summarized in Table 6.2.1-29.

6.2.1.5.6 Steam-Water Mixing

The ECCS spillage flow is modeled with GOTHIC flow boundary conditions. Mass and energy injection rates are calculated by the primary system codes. The spillage flow is conservatively injected as small droplets to ensure equilibrium with the atmosphere before reaching the RWSP. Water spillage rates from the broken loop accumulator are presented in Table 6.2.1-28.

6.2.1.5.7 Passive Heat Sinks

The passive heat sinks and their thermophysical properties used in the analysis are given in Table 6.2.1-30 and Table 6.2.1-31, respectively. They are divided, in accordance with Branch Technical Position 6-2 (Ref. 6.2-20), and are modeled as described in Subsection 6.2.1.1.3 for containment integrity analysis with the following exceptions:

(1) The conductor mass and surface areas are biased high to cover uncertainties in the actual mass and area.

(2) Material properties are biased high (density, conductivity, and heat capacity) as indicated in Branch Technical Position 6-2 (Ref. 6.2-20).

(3) For conductors that model painted surfaces or include an air gap, such as the containment liner/concrete structures, the thermal resistance of the paint layer or the air gap is set to zero.

(4) The initial temperature for thermal conductors is set to a low value consistent with a low ambient temperature.

(5) The outside surface of the containment shell is maintained at -40°F throughout the calculation. The initial through-thickness temperature distribution of the containment shell is consistent with initial atmosphere temperatures of both sides.

(6) For the inside surfaces of thermal conductors, the Tagami/Uchida heat transfer coefficient option is selected, as described in the following subsection.

6.2.1.5.8 Heat Transfer to Passive Heat Sinks

The following conservative condensing heat transfer coefficient is incorporated in the GOTHIC code for the exposed passive heat sinks during the blowdown and post-blowdown phases, in conformance with Branch Technical Position 6-2 (Ref. 6.2-20).

The condensation heat transfer coefficient (H_{cond}) as a function of time (t) on the surface of heat sinks during blowdown period is given as

$$H_{cond}(t) = H_{init} + \left\{H_{Tagami}(t_{eob}) - H_{init}\right\}\left(\frac{t}{t_{eob}}\right)^{0.025}$$

where H_{init} is initial heat transfer coefficient (H_{init} = 8 Btu/ft^2-hr-^{o}F), $H_{Tagami}(t_{eob})$ is a peak condensation heat transfer coefficient by Tagami, which appears at the end of blowdown, and t_{eob} is time of the end of blowdown.

$$H_{Tagami}(t_{eob}) = 4 \times 72.5 \times \left(\frac{Q}{V \times t_{eob}} \right)^{0.62}$$

where Q is total released energy during the blowdown period and V is free volume of the containment, respectively, and the factor of 4 is consistent with Branch Technical Position 6-2 (Ref. 6.2-20).

Condensation heat transfer coefficient on the surface of heat sinks after the blowdown period is

$$H_{cond}(t) = 1.2 \times H_{Uchida} + \{H_{Tagami}(t_{end}) - 1.2 \times H_{Uchida}\} \exp\{-0.62(t - t_{eob})\}$$

where

$$H_{Uchida} = 79.33 \times \left(\frac{\rho_{vs}}{\rho_{vg}} \right)^{0.62}$$

ρ_{vs} is steam density in the containment volume and ρ_{vg} is density of gas, respectively.

Transient heat transfer coefficients on the surface of the heat sinks are shown in Figure 6.2.1-83.

6.2.1.5.9 Other Parameters

Containment purge is assumed to be in operation at time zero and air is vented through containment exhaust lines until the isolation valves fully close, which results in further minimization of the containment pressure. However, the total amount of purged air volume is less than 1,500 ft^3, which is included in the margin of the initial containment free volume. Therefore, containment purge is not directly modeled in the analysis. No other parameters have a substantial effect on the minimum containment pressure analysis.

6.2.1.6 Testing and Inspection

The preoperational testing and inspection and inservice testing and inspection of the containment meet ASME Code Section III requirements for containment vessels. Testing and inspection of the containment require written nondestructive examination procedures as required by ASME Code Article CC 5000 (Ref. 6.2-21). The COL applicant is responsible to prepare and implement an initial test program consistent with DCD Chapter 14 in accordance with RG 1.68 to ensure Operational readiness. Preoperational testing includes quality control testing of the concrete and concrete constituents in accordance with the frequencies established by Table CC-5200-1 and

examination of the reinforcing systems, prestressing systems, and welds in accordance with ASME Code. Structural integrity testing is required to demonstrate the quality of construction and to verify the acceptable performance of new design features. Leakage testing of the RWSP liner (cladding) is performed in accordance with ASME Code requirements. Inspection criteria are delineated in ASME Code Article CC-5000. Failed inspection areas are repaired in accordance with ASME Code. The containment is pressure tested at a pressure of at least 1.15 times the containment design pressure prior to acceptance in accordance with the requirements of ASME Code Section III, Article CC-6000 (Ref. 6.2-22). Preoperational testing is described in detail in Chapter 3, subsection 3.8.3.7.

Inservice testing and inspection requirements are described in Chapter 3, subsection 3.8.3. Subsection 3.8.3.7 discusses the inservice inspection requirements for the containment vessel. Subsection 6.2.4.4 provides a description of the testing and inspection of the containment isolation system. The requirements and methods used for containment leakage testing is presented in subsection 6.2.6. The containment isolation system testing and the containment leakage testing are performed to ensure the postulated leakage from a design basis accident will be within the assumptions provided in Chapter 15, “Transient and Accident Analyses.”

6.2.1.7 Instrumentation Requirements

Instruments are installed to monitor conditions inside the containment and actuate the appropriate safety functions when an abnormal condition is sensed. Instruments monitor containment pressure, temperature, hydrogen concentration and radioactivity, and air effluent for containment depressurization.

Four narrow-range pressure detectors monitor the containment pressure over a pressure range of -7 to 80 psig. The pressure detectors are powered from independent Class-1E sources, are widely separated around the containment, and connect to their associated transmitters (outside the containment) through oil-filled instrument lines. The containment pressure activates logic to initiate a variety of ESF functions, which are discussed in the following sections. Containment pressure is indicated and alarmed in the main control room (MCR).

Two temperature sensors are installed to monitor the containment air temperature between 40 and 400°F. The containment temperature is indicated and alarmed in the MCR, as well as stored in the process computer.

Two wide range level instruments monitor the water level during normal operation and two narrow range level instruments monitor the water level during accident conditions.

One temperature sensor is installed to monitor the RWSP water temperature. The RWSP temperature is indicated and alarmed in the MCR, as well as stored in the process computer.

Four area radiation monitors are positioned inside the containment. The containment area radiation monitors detect airborne particulate radioactivity in the containment

circulating air. High radiation in the containment isolates the containment ventilation and alarms in the MCR.

Section 7.3 describes the instrumentation and controls, including the power supplies, the actuation logic, and the resulting system/component initiation signals, used for the automatic ESF actions.

6.2.2 Containment Heat Removal Systems

The containment heat removal system is a dual-function ESF system; containment spray for fission product removal as described in subsection 6.5.2, and containment spray for containment cooling as discussed here. The CSS and the residual heat removal system (RHRS) share major components which are containment spray/residual heat removal (CS/RHR) pumps and heat exchangers. The RHR for shutdown cooling is described in Chapter 5, subsection 5.4.7.

There are four 50% capacity trains of containment spray, using four dual-purpose CS/RHR RWSP suction lines, four dual-purpose CS/RHR spray pumps, four dual-purpose CS/RHR heat exchangers, and a spray ring header composed of four concentric interconnected rings. To ensure a reliable containment spray pattern coverage, each spray ring is located at a different containment elevation, and spray rings are supplied from the four 50% capacity trains of containment spray.

6.2.2.1 Design Bases

The containment spray system (CSS) is designed to perform the following major functions:

- Containment heat removal
- Fission product removal

These functions are provided by safety-related equipment with redundancy to deal with single failure, environmental qualification, and protection from external hazards.

6.2.2.1.1 Containment Heat Removal

In the unlikely event of a design basis LOCA or secondary system piping failure, the CSS is designed to limit and control the containment pressure, such that:

- The peak containment accident pressure is well below the containment design pressure
- The containment pressure is reduced to less than 50% of the peak calculated pressure for the design basis LOCA within 24 hours after the postulated accident.

The energy releases into the containment for a design basis LOCA and a secondary system piping failure are described in subsections 6.2.1.3 and 6.2.1.4, respectively.

As described in subsection 6.2.1.1.1, the ability of the containment heat removal system is evaluated assuming the worst single failure (with removes one train from service) concurrent with an outage that removes a second train from service. For primary system piping breaks, loss-of offsite power (LOOP) is assumed. For secondary system piping breaks, the cases where LOOP is not assumed are also considered, since the LOOP can possibly reduce releases to the containment.

6.2.2.1.2 Fission Product Removal

The function of containment spray for fission product removal is described in subsection 6.5.2.

6.2.2.1.3 Compliance with Regulatory Requirements

The CSS design complies with applicable regulatory requirements, including the following:

(1) GDC 2, “Design bases for protection against natural phenomena”

(2) GDC 4, “Environmental and dynamic effects design bases”

(3) GDC 5, “Sharing of structures, systems, and components”

(4) GDC 17, “Electric power systems”

(5) GDC 38, “Containment heat removal”

(6) GDC 39, “Inspection of containment heat removal system”

(7) GDC 40, “Testing of containment heat removal system”

The compliance with these GDC is discussed in Chapter 3, Section 3.1.

6.2.2.1.4 Reliability Design Bases

The reliability of the CSS has been considered in establishing the system’s functional requirements, selecting the particular components and their location, and designing the connected piping. Redundant components are provided where the loss of one component would impair reliability. Redundant sources of the containment spray (P signal) are available so that the proper and timely operation of the CSS is ensured. Sufficient instrumentation is available so that failure of an instrument does not impair the readiness of the system. The active components of the CSS are normally powered from separate buses which are energized from offsite power supplies. In addition, redundant emergency onsite power is available through the use of the emergency power sources to ensure adequate power for all CSS requirements. Each emergency power source is capable of driving all pumps, valves, and instruments associated with one train of the CSS. The CSS receives normal power and is backed up with onsite Class 1E emergency electric power sources, as noted in DCD Chapter 8.

The CSS is located in the Reactor Building and the Containment. Both structures are Seismic Category I and provide tornado missile barriers to protect the CSS. The CSS includes four 50% capacity CS/RHR pump trains and assumes one is out of service for maintenance and one becomes inoperative due to a single failure upon the initiation of the CSS. The CSS is designed with sufficient redundancy to ensure reliable performance, including the failure of any component coincident with occurrence of a design basis event, as discussed in DCD Chapters 3, 7, and 15.

Subsection 6.2.1 discusses the containment environmental conditions during accident conditions, and Chapter 3, Section 3.11 discusses the suitability of equipment for design

environmental conditions. All valves required to be actuated during CSS operation are located to prevent vulnerability to flooding.

Protection of the CSS from missiles is discussed in Section 3.5. Protection of the CSS against dynamic effects associated with rupture of piping is described in Section 3.6. Protection from flooding is discussed in Section 3.4.

The CSS is designed for periodic inservice testing and inspection of components in accordance with ASME Code Section XI.

6.2.2.2 System Design

Figure 6.2.2-1 is the flow diagram of the CSS, showing the major components, instruments, and the opriate system interconnections. Table 6.2.2-1 presents design and performance data for CSS components. The performance data for CS/RHR pump and CS/RHR heat exchanger is shown in Chapter 5, subsection 5.4.7.

The CSS receives electrical power for its operation and control from onsite emergency power sources and offsite sources, as shown in Chapter 8. In the unlikely event of a LOCA or secondary system line break that significantly increases the containment pressure, the containment spray automatically initiates to limit peak containment pressure to well below the containment design pressure. In addition to preserving containment structural integrity, containment spray limits the potential post-accident radioactive leakage by reducing the pressure differential between the containment atmosphere and the environment.

The CS/RHR system can be manually initiated and operated from the MCR and RSC. In addition to the typical system status and operating information (e.g., valve position indication, pump run status), the containment temperature and pressure are indicated and recorded in the MCR and RSC.

Dual-use components are the CS/RHR heat exchangers and CS/RHR pumps. Motor-operated valves permit CSS or RHRS recirculation of the reactor core. The four CSS containment isolation valves are normally closed, but open automatically on a P signal. The CSS containment isolation valves are interlocked and are allowed to open only if two in-series RHR hot leg suction isolation valves are closed. Further, the RHR hot leg suction valves are interlocked so that they cannot be opened unless the corresponding CSS containment isolation valves are closed. This arrangement prevents the reactor vessel water inventory from being sprayed into the containment.

Following a DBA, the containment pressure approaches atmospheric pressure. When the containment pressure is reduced sufficiently and the operator determines that containment spray is no longer required, the operator terminates containment spray. The operator closes the containment spray header isolation valves and aligns system flow through the CS/RHR heat exchanger back to the RWSP through the full flow test line. The pit water is then recirculated and cooled.

CS/RHR components are procured by qualified vendors, approved to supply under components and materials. Chapter 14, "Initial Test Program," discusses component and integrated system tests performed prior to un-conditional plant operations.

6.2.2.2.1 CS/RHR Pumps

These components are included in the RHRS. Four dual-purpose CS/RHR pumps are provided, one for each of four 50% capacity trains. They are motor-driven centrifugal pumps with mechanical seals. The pumps are sized to deliver 3,000 gpm at a discharge head of 410 ft. The 100% capacity design flow rate (two of four 50% capacity CS/RHR pumps) is based on 15.2 gpm flow per nozzle and 348 nozzles. With a minimum flow rate for each pump of 355 gpm, the required two-pump 100% flow rate is, thus, 6,000 gpm. The CS/RHR pump discharge head is based on a static head of 215 ft. and pressure losses equivalent to 165 ft. Including a margin of 30 ft. The design head of the CS/RHR pumps is 410 ft.

All four CS/RHR pumps automatically start and the containment isolation valves automatically open on the receipt of a P signal, delivering a flow from four CSS trains to the CSS spray rings. Initiating signals, setpoints, logic, and control are described in Chapter 7, "Instrumentation and Control Systems." Chapter 8, "Electrical Power," discusses electrical power supplies and the available sources for the CSS.

6.2.2.2.2 CS/RHR Heat Exchangers

These components are included in the RHRS. Four CS/RHR heat exchangers are provided. They are horizontal tube and shell heat exchangers. The CS/RHR system water flows through the tubes, and the component cooling water flows through the shell.

6.2.2.2.3 Containment Spray Piping

Each of the RWSP suction valves is normally open to ensure that suction piping remains full and aligned to provide a ready flow path to the CS/RHR pumps. Each CSS train's discharge line to the containment spray rings is provided with a normally closed, motor-operated containment isolation gate valve.

The system piping is normally filled and vented to the containment isolation valves (CSS-MOV-004A, B, C, and D) at elevation 36.75 ft. (typical for all four 50% containment spray trains) prior to plant startup. The minimum piping "keep full" level corresponds to the RWSP 100% water level at elevation 19.5 ft. A conservative value of 100 seconds time delay is assumed between the system initiation and the spray ring flow for purposes of LOCA and the containment response analyses. The delay time associated with accidents is provided in subsection 6.2.1.1.3.4 and Table 6.2.1-5.

6.2.2.2.4 Containment Spray Nozzles

The containment spray nozzles are of the type and manufacture commonly used in United States commercial nuclear applications. The nozzles are fabricated from 304 stainless steel, and each is fitted with a 0.375 in. orifice. As shown in Figure 6.2.2-2, the one-piece construction provides a large, unobstructed flow passage that resists

clogging by particles, while producing a hollow cone spray pattern. Figure 6.2.2-3 shows each nozzle's orientation on a spray ring. The nozzle orientation is identified as vertical down (No. 1 nozzle, R-5605); 45° from vertical down (No. 3 nozzle, R-5604); and horizontal (No. 2, and No. 4 nozzles, R-5603). Figure 6.2.2-4 presents the spray pattern and typical spray coverage of each nozzle type on the operating floor of the containment.

Figure 6.2.2-5 is a sectional view of containment showing the elevation of the spray rings (A, B, C, and D) and the typical spray pattern from the nozzle to the containment operating floor level (elevation 76 ft. - 5 in). Figure 6.2.2-6 presents a plan view showing the location of each nozzle on each spray ring and the predicted spray coverage on the operating floor of the containment. Figure 6.2.2-6 also tabulates the number and orientation of the nozzles on each spray ring. Of the 348 containment spray nozzles distributed among the four containment spray rings, there are only four vertical up No. 4 nozzles (R-5603)—one on each spray ring. In addition to their spray function, these nozzles also serve as the high point vent on each spray ring.

6.2.2.2.5 Refueling Water Storage Pit

The RWSP is the protected, reliable, and safety-related source of boric acid water for the containment spray and SI. (Section 6.3 describes the SI function for the US-APWR ECCS.) The RWSP also is used to fill the refueling cavity in support of refueling operations. The RWSP is located on the lowest floor inside the containment, with a minimum 81,230 ft^3 capability available, it is designed with sufficient capacity to meet long-term post-LOCA coolant needs, including holdup volume losses. Potential holdup areas within the containment are depicted in Figure 6.2.1-9 . The total water volume held up in the containment is shown in Figure 6.2.2-7. Figure 6.2.2-7 shows the RWSP capacity requirements for refueling and LOCA. The RWSP is configured as a rough horseshoe-shaped box around the containment perimeter. The open end of the RWSP is oriented at the containment 0° azimuth (plant north), where the reactor coolant drain tank, reactor coolant drain pumps, and the containment sump are located. Figure 6.2.1-16 and Figure 6.2.1-17 present plan and sectional views of the RWSP. Subsection 6.2.1 describes the RWSP and its containment-related features and functions as part of the containment structure.

As discussed in Chapter 3, the RWSP is designed as Equipment Class 2, Seismic Category I, with a maximum operating temperature of 250°F. Pressure in the RWSP air space is relieved to the containment atmosphere, but the RWSP is designed to withstand a containment pressure of 9.6 psi. The inside walls and floor of the RWSP in which contact with 4,000 ppm boric acid solution are lined with stainless steel clad steel plate. The RWSP ceiling (underside of floor at containment elevation 25 ft. - 3 in.) is not normally in contact with the RWSP boric acid water, but is clad with stainless steel plate.

The coolant and associated debris from a pipe or component rupture (LOCA), and the containment spray drain into the RWSP through transfer pipes, as shown in Figure 6.2.1-12. The pipes are installed through the RWSP ceiling, ending as openings into the containment floor at elevation 25 ft. - 3 in. Each transfer pipe opening into the containment is protected from large debris by vertical debris interceptor bars that are capped by a ceiling plate. There are ten transfer pipes distributed around the containment at elevation 25 ft. - 3 in. To minimize containment humidity (due to

evaporation from the RWSP), the transfer pipes extend from the containment floor, through the RWSP ceiling to below the normal 100% RWSP water level.

The RWSP vents are installed through the RWSP ceiling and discharge into the containment atmosphere above. The vents act to equalize the RWSP and the containment free volume air pressure, when the SI pumps or CS/RHR pumps take suction and draw down the RWSP water level. The vents consist of five pairs of vents to mix the RWSP air with the containment free volume air during post-LOCA. Each pair of vent pipes terminates below the normal RWSP water level to minimize the release of vaporized RWSP water into the containment atmosphere during normal plant operation.

As shown in Figures 6.2.2-8 and 6.2.2-9, each quadrant of the RWSP contains paired suction piping and the suction pit arrangements for the CS/RHR pumps and SI pumps. The open end of each suction pipe is equipped with a debris strainer (emergency core cooling/containment spray (ECC/CS) strainer) that satisfies NEI 04-07, “PWR Sump Performance Evaluation Methodology" and conforms to the guidance in RG 1.82 (Ref. 6.2-23). As described in Chapter 3, the ECC/CS strainers are Equipment Class 2, Seismic Category I.

The ECC/CS strainers are a passive disc, fin, or cassette-type design with a large “footprint” that presents a surface area of approximately 2,150 ft^2, sufficient to preclude debris clogging. The ECC/CS strainers are made of stainless steel, and use perforated plates in a layered disc design to limit the maximum “pass through” debris size to 0.071 in. Important design features of the US-APWR and CS/RHR and SI suction piping ECC/CS strainers include the following:

- Active portion of strainer above the RWSP floor
- Strainer support base acts as a curb against potential debris
- Fully submerged with recirculation sufficient to preclude flow vortexing
- Maximum debris size “pass through” is 0.071 in.

Table 6.2.2-2 presents a comparison of the RWSP recirculation intake debris strainer (ECC/CS strainer) design to the guidance of RG 1.82 (Ref. 6.2-23).

The RWSP also is equipped with two spargers (diffusers), which are large stainless steel right circular cylinders that are capped and drilled; each sparger is located near the bottom of the RWSP at containment 90° (plant east) and 270° (plant west) azimuth. The spargers receive and diffuse into the RWSP water, high-energy (but low volume and flow) water from emergency letdown lines and CS/RHR pump suction relief valves. The emergency letdown lines (discribed in subsection 6.3.2) are directed to separate RWSP spargers. The RWSP is equipped with an overflow pipe to accommodate a level change from such discharges, as shown in Figure 6.2.1-15.

6.2.2.2.6 Major Valves

Containment isolation is discussed in subsection 6.2.4. Control (including interlocks) and automatic features of containment isolation valves are discussed in DCD Chapter 7, Section 7.3.

6.2.2.2.6.1 CS/RHR pump RWSP suction isolation Valve

There is a normally open motor-operated gate valve in each of the four CS/RHR pump suction lines from the RWSP. These valves would remain open during normal and emergency operations. The valves are remotely closed by operator action from the MRC and RCS only if a CSS had to be isolated from the RWSP to terminate a leak or during RHR cooldown operation where the isolation from the RWSP is required. In the pump/valve maintenance, these valves are also closed. The open or closed valve position, for these valves, is indicated in the MCR and RSC. The four CS/RHR pump RWSP suction isolation valves (CSS-MOV-001A, B, C, and D) are Equipment Class 2, Seismic Category I.

These valves are interlocked and are allowed to open only if the two in-series RHR hot leg suction isolation valves are closed.

6.2.2.2.6.2 Containment Spray Header Containment Isolation Valve

There is a normally closed motor-operated gate valve in each CS/RHR heat exchanger outlet line. These valves are open automatically on receipt of a containment spray signal. The valves can be closed remotely by operator action from the MRC and RCS if containment isolation is required or during RHR coldown operation where the isolation from the containment spray header is required. The open or closed valve position, for these valves, is indicated in the MCR and RSC. The four containment spray header containment isolation valves (CSS-MOV-004A, B, C, and D) are Equipment Class 2, Seismic Category I.

These valves are interlocked and are allowed to open only if two in-series RHR hot leg suction isolation valves are closed. In addition, the electrical power for these valves are removed to prevent an inadvertent opening and actuation of containment spray during RHR cooldown operation.

6.2.2.2.6.3 Containment Spray Header Containment Isolation Check Valve

One swing check valve is aligned in each CS/RHR heat exchanger outlet line as containment isolation valve. The containment spray header containment isolation check valve (CSS-VLV-005A, B, C, and D) are Equipment Class 2, Seismic Category I.

6.2.2.3 Design Evaluation

Because smaller spray droplets fall more slowly and reach equilibrium with vapor more quickly than larger droplets, the US-APWR uses a Sauter mean diameter of 1,000 microns as the assumed droplet size for analysis purposes.

This value is obtained by the following formula:

$\sum (n \times d^3) / \sum (n \times d^2)$ µm

The value of the n and d variables are empirical data obtained using the spray nozzle design shown in Figure 6.2.2-2, where:

n = number of droplets in specified diameter range

d = diameter of droplet

While a given mass of drops at the Sauter mean diameter has the same surface to mass ratio as the actual drop spectrum, the consistency of the surface to mass ratio ensures that the heat transfer rate to heat capacity ratio is correctly approximated. Thus, the Sauter mean diameter of 1,000 microns is conservative and possesses a consistent surface to mass ratio for use in the GOTHIC (Ref. 6.2-1, 6.2-2, 6.2-3) computer analysis code.

Containment spray patterns, containment spray elevation and plane drawings are provided in Figures 6.2.2-5, 6.2.2-6. These drawings demonstrate adequate coverage and overlap.

With vapor pressure over the RWSP in equilibrium with the containment pressure (and no credit taken for any RWSP subcooling), the net positive suction head (NPSH) available to the CS/RHR pumps is calculated by the following:

$$NPSH_{available} = h_{static\ head} - h_{line\ loss} - h_{ECC/CS\ strainer\ loss}$$

$h_{ECC/CS\ strainer\ loss}$: headloss due to debris clogging and chemical effect

$h_{static\ head}$: RWSP minimum water level (minus 5% uncertainty for water level) - SIS pump center elevation

$h_{line\ loss}$: Suction piping and valve pressure loss plus 5% uncertainty

The chemical effect accounts for potential ECC/CS strainer blockage from the insulation postulated to dislodge or decompose from wetting by the mixed boric acid and sodium tetraborate decahydrate (NaTB). The strainer supplier testing program demonstrates the $H_{ECC/CS\ strainer\ loss}$ value, including margin, is met.

The following conservative containment conditions and hydraulic and debris considerations are made to enhance the NPSH available at the CS/RHR pump inlet:

- The use of debris resistant insulation is maximized (e.g., reflective metal)
- The use of Min-K-based pipe insulation is precluded
- The use of materials that can yield fibrous debris and particulates is minimized
- The use of NaTB chemical additive to reduce the formation of chemical precipitates

The available and required NPSH at the inlet of the CS/RHR and SI pumps are provided in Table 6.2.2-1. Thus, adequate NPSH is provided to the CS/RHR and SI pumps, including margin.

Table 6.2.2-1 presents values used in the calculations described above.

Debris estimation is performed by the COL applicant in accordance with the methodology described in NEI 04-07 amended by NRC in December, 2004 (Ref. 6.2-24), or by applying more conservative assumptions. The amount of debris generated by a pipe break is estimated in such a manner that the size and location of pipe break is assumed to maximize the insulation debris, coating debris, and/or other potential debris sources installed in the containment. Preparation of a foreign materials exclusion program is the responsibility of the COL applicant. This program addresses other debris sources such as latent debris inside containment. This program minimizes foreign materials in the containment.

Table 6.2.2-3 is a failure modes and effects analysis of the CSS and demonstrates sufficient reliability.

The containment design heat removal evaluations documented in subsection 6.2.1.1 includes the effects of the CSS operation (including single failure considerations). Table 6.2.1-5 provides ESF system parameters relating to event sequence such as ECCS and CSS actuation timing. Table 6.2.1-5 also provides both full capacity and partial capacity (used for containment design evaluation) system operation parameters. These evaluations conclude that the acceptance criteria are met. Therefore, the CSS design is acceptable. Subsection 6.2.1.1 includes information about the energy content of the containment atmosphere and the recirculation water during the transients that are evaluated.

Information on the integrated energy content of the containment atmosphere and RWSP water as functions of time following the postulated design basis LOCA and the integrated energy absorbed by the structural heat sinks and CS/RHR heat exchangers is provided in the following Tables and Figures :

- Table 6.2.1-12, Distribution of Energy at Selected Locations within Containment for Worst-Case Postulated DEPSG Break

- Table 6.2.1-14, Distribution of Energy at Selected Locations within Containment for Worst-Case Postulated DEHLG Break

- Figure 6.2.1-84, Containment Energy Distribution Transient for DEPSG Break (C_D=1.0)
- Figure 6.2.1-85, Containment Energy Distribution Transient for DEHLG Break (C_D=1.0)

An NPSH evaluation of the CSS head loss is prepared by the COL applicant and the FSAR updated based on as-built information.

6.2.2.4 Tests and Inspections

Chapter 14, "Initial Test Program," is organized and conducted to develop confidence that the plant operates as designed. The initial test program verifies the design and operating features, and gathers important baseline data on the nuclear steam supply system, as well as the balance-of-plant. The baseline data are used to establish the acceptability basis for surveillance and testing during the operational life of the plant. The three phases of the initial test program are as follows:

- Pre-operational tests
- Initial fuel loading and criticality
- low power and power ascension testing

The pre-operational test program tests each train of the CSS. Testing of the CS/RHR pumps using the full flow test line demonstrates the capability of the pumps to deliver the design flow.

Pre-operational tests provide assurance that individual components are properly installed and connected, and demonstrate that system design specifications are satisfied. Pre-operational testing demonstrates that limited interface requirements for support systems are satisfied. Formal review and approval of pre-operational test results (the "pre-operational plateau") are performed prior to initial fuel loading and criticality. The pre-operational test program for the CSS is described in Chapter 14, subsection 14.2.12.1.

Testing under maximum startup loading conditions is performed to verify the adequacy of the electric power supply. Maximum startup loading conditions testing is described in Chapter 14, subsection 14.2.12.1.

Because the CSS is a standby system and not normally operating, periodic inservice pump, valve, and logic tests are performed. Chapter 16, "Technical Specifications," requires that an IST pump and valve program be developed and implemented in accordance with the requirements of 10CFR50.55a(f) (Ref. 6.2-25).

All CSS valves are tested to demonstrate satisfactory performance in all expected operating modes. Testing of the CSS includes demonstration that the spray nozzles, spray headers, and piping are free of debris. Testing is performed during the initial startup testing in accordance with the guidance in RG 1.68 (Ref. 6.2-26 Appendix A).

The CS/RHR pumps are periodically tested with minimum or full pump flow to the piping loops during normal operation.

Testing of the initiation logic and interlock logic is described in Chapter 7, section 7.1. Testing intervals of CSS components are listed in Chapter 3, subsection 3.9.6.

Preservice and inservice examinations, tests, and inspections are performed in accordance with ASME Code Section XI, as required in Section 6.6.

6.2.2.5 Instrumentation Requirements

Four narrow-range pressure transmitters are provided. As described in Chapter 7, Section 7.3, the reactor protection system uses the narrow-range containment pressure transmitters to automatically actuate the following:

- CSS
- Containment isolation
- Main steam isolation
- Containment ventilation isolation
- ECCS

Narrow range containment pressure is indicated and alarmed in the MCR and RSC. A single, wide range containment pressure transmitter provides indication to the MCR and RSC.

Chapter 7, subsection 7.3.1, describes instrumentation design details for actuating the CSS. Chapter 18, “Human Factors Engineering” identifies the CSS control panel locations and describes the instrumentation and alarm features of the human interface associated with the CSS information and control.

Chapter 5, subsection 5.4.7, discusses other instrumentation associated with monitoring and controlling the RHR function of this system.

6.2.3 Secondary Containment Functional Design

The US-APWR design does not employ a secondary containment.

6.2.4 Containment Isolation System

The containment prevents or limits the release of fission products to the environment. The containment isolation system allows the free flow of normal or emergency-related fluids through the containment boundary in support of reactor operations, but establishes and preserves the containment boundary integrity. The containment isolation system includes the system and components (piping, valves, and actuation logic) that establish and preserve the containment boundary integrity.

The criteria for isolation requirements and the associated system design are set forth in GDC 55 through 57 of Appendix A to 10CFR50. Unless acceptable on some other specific and defined basis (e.g., instrument lines), two isolation barriers are required; one inside and one outside of the containment. Isolation barriers are valves, unless the piping system inside the containment is neither part of the RCPB, nor communicates directly with the containment atmosphere, and is both suitably protected and robust. This section of the DCD describes the design and functional capabilities of the US-APWR containment isolation system in compliance with these GDC.

6.2.4.1 Design Bases

As described in Chapter 3, subsection 3.1.5, the containment isolation system conforms to GDC 54, 55, 56, and 57, and is designed to Seismic Category I, quality group B.The containment isolation valves are identified as Equipment Class 1 or 2, as described in Chapter 3, Section 3.2. In addition to being protected from the effects of a postulated pipe rupture and containment missiles, closed systems inside the containment considered an isolation barrier under GDC 57 are designed to withstand the containment design temperature, pressure from the containment structural acceptance test, LOCA conditions, and to accommodate the internal fluid pressure associated with the containment temperature resulting from a design basis LOCA. Instrument lines closed both inside and outside containment are designed in accordance with the guidance provided by RG 1.11, RG 1.141 and satisfy NUREG-0800, SRP 6.2.4 (Ref. 6.2-27), acceptance criterion 1. The containment isolation system is designed in accordance with the Three Mile Island (TMI)-related requirements of 10CFR50.34(f)(2)(xiv)(A) through (E).

Chapter 3, Sections 3.3 and 3.4 describe how the containment isolation system is designed to accommodate the wind and tornado loadings, and to withstand flood levels. The design requirements for protection from internally generated missiles (for isolation system components inside and outside of the containment) are described in Chapter 3, Section 3.5. The design for protection against the dynamic effects associated with the postulated rupture of piping is described in Chapter 3, Section 3.6, while the environmental qualification program for mechanical and electrical components of the containment isolation system is described in Section 3.11. The environmental qualification program for the containment isolation components considers the effects of short-term conditions inside containment, LOCA high radiation (in addition to the plant service life integrated dose), differential pressure, a high temperature, steam-laden atmosphere, and a wetting spray of mixed borated water and NaTB solution.

6.2.4.2 System Design

Electrical and mechanical equipment redundancy is incorporated in the design of the containment isolation system. Mechanical redundancy is provided by two barriers, and where actuation of two power-operated isolation valves on the same penetration (in series) is required, electrical redundancy is provided by independent power sources. Where remote-manual valves are acceptable and employed, remote position indication is provided, as well as detection of possible leakage.

Containment isolation valves may be gate, globe, butterfly, diaphragm, check (simple check valves are acceptable only inside containment), or relief valves (with a suitable relief setpoint).

The valve closure times are established with the objective of limiting any possible release of radioactive material to the amount that is as low as is reasonable attainable. In addition, fluid system mechanics (e.g., erosion, water hammer) and the possible effects of too-rapid closure on valve reliability are considered. Unless otherwise noted, power-operated valves 3 ½ in. to 12 in. close within the time determined by dividing the nominal valve diameter by 12 in. per minute. Valves larger than 12 in. diameter (nominal) close within one minute, unless an accident dose calculation is performed to show that a longer closure time does not result in a significant increase in the potential offsite doses.

Table 6.2.4-1 presents the design information regarding provisions for isolating the containment penetrations, while Table 6.2.4-2 and Figure 6.2.4-1 presents associated containment isolation configurations.

6.2.4.3 Design Evaluation

The piping systems penetrating the containment are provided with leak detection, isolation, and containment capabilities. These piping systems are designed with the capability to test, periodically, the operability of the isolation valves and associated apparatus and determine if valve leakage is within acceptable limits.

6.2.4.3.1 Evaluation of Conformance to General Design Criterion 55 of 10CFR50, Appendix A

Each line that is part of the RCPB and penetrates containment is provided with containment isolation valves, unless it can be demonstrated that the containment isolation provisions for a specific class of lines, such as instrument lines, are acceptable on some other defined basis. The following systems penetrating containment meet GDC 55 criteria:

- SIS N_2 supply line to the accumulators, the RHRS return line, and the primary makeup water system (PMWS) demineralized water supply line, using one automatic isolation valve inside and one locked closed isolation valve outside the containment.
- RCS PMWS line to the PRT using three valves, one automatic isolation valve and one locked closed manual isolation valve inside and one automatic isolation valve outside containment.
- CVCS letdown line/charging line/seal injection line for RCPs/seal water return line, SIS SI line, process and post accident sampling system (PSS) pressurizer gas and liquid phase sampling line, in core instrument gas purge system (ICIGS) CO_2 line, waste management system (WMS) reactor coolant drain tank gas analysis line/N_2 supply and vent line/pump discharge line, accumulator sample line, and the RCS N_2 supply line to the pressurizer relief tank (PRT) using one

automatic isolation valve inside and one automatic isolation valve outside the containment.

Containment isolation provisions for lines in ESF or ESF-related systems normally consist of two isolation valves in series. A single isolation valve is acceptable if the system reliability can be shown to be greater, the system is closed outside the containment, and a single active failure can be accommodated with only one isolation valve in the line. Table 6.2.4-2 lists GDC 55 systems with single valve isolation and justification, in accordance with the guidance in NUREG-0800, SRP 6.2.4 (Ref. 6.2-27).

6.2.4.3.2 Evaluation of Conformance to General Design Criterion 56 of 10CFR50, Appendix A

Each line that connects directly to the containment atmosphere and penetrates the primary reactor containment is provided with containment isolation valves as follows, unless it can be demonstrated that the containment isolation provisions for a specific class of lines, such as instrument lines, are acceptable on some other defined basis. The following systems penetrating the containment meet GDC 56 criteria:

- Fire protection water supply system (FSS) injection line to reactor cavity and station service air system (SSAS) service air line, using one automatic isolation valve inside containment and one locked closed isolation valve outside containment.
- CSS containment spray line, HVAC containment supply and exhaust line, plant radiation monitoring system (RMS) containment air sampling line, WMS containment sump pump discharge line, refueling water recirculation pump suction and discharge line, instrument air system (IAS) instrument air line, and FSS water supply line to containment air purification unit, using one automatic isolation valve inside and one automatic isolation valve outside the containment.
- Leakage rate testing narrow range pressure detection line, using one locked closed isolation valve inside with a pipe cap and one locked closed isolation valve outside the containment.
- Component cooling water system (CCWS) supply line to the RCPs, using two automatic containment isolation valves of which the outboard valve is capable of remote manual operation.
- CCWS return line from RCPs, using two automatic containment isolation valves, one inside and one outside of the containment, each capable of remote manual operation.

Containment isolation provisions for lines in ESF or ESF-related systems normally consist of two isolation valves in series. A single isolation valve is acceptable if the system reliability can be shown to be greater, the system is closed outside containment, and a single active failure can be accommodated with only one isolation valve in the line. In addition, penetrations exist that do not contain isolation valves, these lines are typically blank flanged. Table 6.2.4-2 lists GDC 56 systems with single valve isolation or blank flanges and justification, in accordance with the guidance in NUREG-0800, SRP 6.2.4 (Ref. 6.2-27).

6.2.4.3.3 Evaluation of Conformance to General Design Criterion 57 of 10CFR50, Appendix A

Each line that penetrates the containment and is neither part of the RCPB nor connected directly to the containment atmosphere has at least one containment isolation valve that is automatic, locked closed, or capable of remote manual operation. These valves are outside the containment and are located as close to the containment as practical. The following systems penetrating the containment meet GDC 57 criteria:

- Main steam and feedwater system (MSFWS) feedwater line and steam generator blowdown system (SGBDS) SG blowdown line, using one automatic containment isolation valve outside the containment, each capable of remote manual operation.
- MSFWS main steam line, using one containment isolation valve outside containment capable of remote manual operation.
- Chilled water system (VWS) containment fan cooler unit line using two automatic containment isolation valves, both outside of the containment, each capable of automatic operation.
- CCWS inlet and outlet for excess letdown heat exchanger, using one outboard containment isolation valve each to and from the containment capable of automatic operation.

6.2.4.4 Tests and Inspections

Provisions for 10CFR50, Appendix J (Ref. 6.2-28) Type C leakage rate testing include test connections in the process piping. Chapter 14, “Initial Test Program,” describes and discusses the initial testing and operation of all plant systems, including the containment isolation system. Leakage rate testing is further described in subsection 6.2.6. Inservice testing of components and systems to assure continuing operability is required by 10CFR50.55a(f). To meet this requirement, Chapter 16, “Technical Specifications” specifies periodic Type A, B, and C leakage rate testing.

6.2.5 Combustible Gas Control in Containment

The containment hydrogen monitoring and control system consists of the following systems:

- Hydrogen monitoring system
- Hydrogen ignition system

The hydrogen monitoring system consists of one hydrogen detector that is located outside of the containment and measures hydrogen concentration in containment air extracted from the containment through the post-accident containment atmospheric sampling line.

Hydrogen concentration is continuously indicated in the MCR after the containment isolation valves of the post accident sampling system (PASS) are manually opened. Figure 6.2.5-1 presents a schematic of the hydrogen monitoring system.

The hydrogen ignition system consists of twenty hydrogen igniters that are positioned in containment areas and subcompartments where hydrogen may be produced, transit, or collect as follows:

- One hydrogen igniter near the PRT
- One hydrogen igniter in the upper area of the pressurizer compartment
- One hydrogen igniter in the lower area of the pressurizer compartment
- Four hydrogen igniters, one in each SG/reactor coolant loop subcompartment
- Four hydrogen igniters in the 2nd floor of containment (EL. 50 ft. – 2 in.)
- Four hydrogen igniters in the 3rd floor of containment (EL. 75 ft. – 3 in.)
- Five hydrogen igniters in the containment dome (near the top of each SG and pressurizer subcompartments)

The hydrogen ignition system is automatically initiated by the ECCS actuation signal. This system may also be actuated manually. The hydrogen igniters reduce the concentration of hydrogen in the containment. The hydrogen igniters are designed to burn hydrogen continuously at a low concentration, thus, preventing significant hydrogen accumulation.

Hydrogen igniters limit combustible gas concentration in the CV following an accident, uniformly distributed, to less than 10% (by volume). Figure 6.2.5-2 presents the typical air-hydrogen flow patterns within containment. Convective heat transfer and hydrogen diffusivity, in conjunction with containment spray discharges, ensure uniform mixing of hydrogen and contact with the installed hydrogen igniters.

6.2.5.1 Design Bases

The containment hydrogen monitoring and control system is designed in accordance with 10CFR50.34(f)(2)(ix), “Additional TMI-related requirements;” 10CFR50.44, “Combustible Gas Control for Nuclear Power Reactors;” and GDC 41, “Containment Atmosphere Cleanup.” The systems also address the recommendations of RG 1.7, “Control of Combustible Gas Concentrations in Containment Following a Loss-of-Coolant Accident;” and NUREGs 0737 and 0660, as presented in Section 1.9.

As noted in RG 1.7 (Ref. 6.2-29), the potential for combustible gases (principally hydrogen) to be generated may arise from an accident that is more severe than a postulated design-basis accident. Thus, in the unlikely occurrence of such an accident, the availability of containment hydrogen monitoring and control provides the added assurance that a significant challenge to the containment integrity (up to and including containment breach) is prevented.

6.2.5.2 System Design

The containment hydrogen monitoring and control system design includes the following:

- One hydrogen detector that measures hydrogen concentration in containment air
- Hydrogen concentration indication in the MCR
- Power supply from two non-Class 1E buses capable of cross-connection and non-Class 1E alternate alternating current (ac) gas turbine generator backed
- Twenty hydrogen igniters, located in the containment
- Capability for operability testing during plant operation
- Materials of construction compatible with severe accident environment

A diagram of the containment hydrogen monitoring and control system is presented in Figure 6.2.5-1. Containment hydrogen monitoring and control design parameters are found in Table 6.2.5-1.

The hydrogen monitoring and control system is supplied by the non-Class 1E P1 and P2 power system, with alternate power capability. P1 and P2 buses are capable of cross-connection, providing power to both motor control centers (MCCs). Both P1 and P2 buses are backed by non-Class 1E alternate ac gas turbine generators. The power distribution to the detector and igniters is designed to minimize the impact of the loss of any single power source. As noted above, the containment hydrogen concentration is indicated in the MCR. This system may also be actuated manually.

The containment hydrogen detector and igniters are designed to function in a severe accident environment. Chapter 19, subsection 19.2.3.3.7 describes equipment survivability in severe accident conditions inside the containment.

The twenty hydrogen igniters are strategically located around the containment: one near the PRT, one in the upper area of the pressurizer subcompartment, one in the lower area of the pressurizer subcompartment, four in the SG/reactor coolant loop subcompartment (one in each subcompartment), four in the 2nd floor of the containment, four in the 3rd floor of the containment and five in the containment dome (near the top of each SG and pressurizer subcompartments). The igniters are located a sufficient distance from large equipment, ceilings, and walls to promote the efficient combustion of hydrogen. A drip shield is provided to protect the igniter from falling water (i.e., containment condensation or spray). The location and operation of hydrogen igniters does not affect the ability to monitor containment hydrogen during severe accidents, or test conditions.

The containment hydrogen detector is of a type and manufacture widely used in commercial nuclear power plants currently licensed by the NRC. The containment hydrogen detection and monitoring equipment is regularly calibrated and the components verified operable, as required by the plant surveillance test program.

The operating principle and accuracy of the combustible gas analyzers are provided by the COL Applicant.

6.2.5.3 Design Evaluation

Hydrogen monitoring and control is provided for the unlikely occurrence of an accident that is more severe than a postulated design-basis accident. Thus, hydrogen monitor has detection and display ranges to 20% of hydrogen in the air, and the hydrogen igniters are automatically energized by the ECCS actuation signal. However, the design evaluation is neither required nor provided for such a beyond-design-basis event.

Beyond-design-basis evaluations documented in Chapter 19 include a combustible gas release within containment corresponding to the equivalent amount of combustible gas that would be generated from a 100% fuel-clad coolant reaction, uniformly distributed. As discussed in Section B of Revision 3 of RG 1.7 (Ref. 6.2-29), these Chapter 19 evaluations are intended to show that hydrogen concentrations do not exceed 10 volume percent (10 vol.%) and that the structural integrity of the containment pressure boundary is maintained.

6.2.5.4 Tests and Inspections

Testing and inspections (including instrument calibration), as recommended by the hydrogen monitoring and control equipment vendor, are performed.

6.2.5.4.1 Preservice Testing

Pre-operational testing of the hydrogen monitoring system is performed either before or after installation but prior to plant startup to verify performance.

Pre-operational testing and inspection of the hydrogen ignition system is performed after installation and prior to plant startup to verify operability of the hydrogen igniters. Verification of the hydrogen igniter positions is also performed. It is verified that the surface temperature of the hydrogen igniters meets or exceeds the hydrogen ignition temperature, as recommended by the vendor, to ensure ignition of hydrogen concentrations above the flammability limit.

6.2.5.4.2 Inservice Testing

Periodic testing and calibration are performed to provide ongoing confirmation that the hydrogen monitoring function can be reliably performed.

The hydrogen ignition system is normally in standby. Periodic inspection and testing are performed to confirm the continued operability of the hydrogen ignition system. Operability testing consists of energizing the hydrogen igniters and confirming that the surface temperature meets or exceeds the hydrogen ignition temperature, as recommended by the vendor, to ensure ignition of hydrogen concentrations above the flammability limit.

6.2.5.5 Instrumentation Requirements

One hydrogen detector is installed to measure hydrogen concentration in containment air.

The hydrogen monitoring system is manually initiated after the containment isolation valves of the PASS are manually opened. Hydrogen concentration indication is continuously displayed in the MCR.

The hydrogen ignition system is automatically energized by the ECCS actuation signal. The hydrogen ignition system may also be manually operated, as needed, in response to the indications of the hydrogen monitoring system.

6.2.6 Containment Leakage Testing

GDC 52, 53, and 54 of Appendix A to 10CFR50 require that the reactor containment vessel and piping systems that penetrate the containment be designed to accommodate periodic leakage rate testing. Further, Appendix J to 10CFR50 (Ref. 6.2-28), specifies leakage testing requirements for the containment, its penetrations, and isolation valves (Type A, B, and, C tests). The containment leakage rate testing program and limits are identified in Chapter 16. The US-APWR leakage rate testing program implements RG 1.163 (Ref. 6.2-30) including the following elements:

- Maximum allowable containment integrated leakage rate
- Pretest requirements
- Venting of fluid systems in containment atmosphere
- Stabilization of containment conditions (temperature, pressure, humidity)
- Testing methodology
- Acceptance criteria

6.2.6.1 Containment Integrated Leakage Rate Testing

As discussed above, specific requirements for Type A (Option B), containment integrated leakage rate testing program are identified in Chapter 16, “Technical Specifications,” and are the responsibility of any COL applicant that references the US-APWR certified design for construction and operation. Sheets 46 and 47 of Figure 6.2.4-1 presents the permanently installed penetrations for the containment integrated leakage rate testing. These penetrations are capped and sealed during normal reactor operation, with compressed air equipment suitable to perform the test temporarily connected.

6.2.6.2 Containment Penetration Leakage Rate Testing

Figure 6.2.4-1 illustrates the containment hatches (personnel airlocks and equipment hatch) and electrical penetrations that are Type B tested. In addition, the seals on the fuel transfer tube (containment end) blind flange are tested (Type B).

Door seals for the personnel airlocks are Type B leakage rate tested by pressurizing the airlock, and suitable permanent test fixtures and gauges are provided. Similarly, the equipment hatch seals are leakage rate tested.

6.2.6.3 Containment Isolation Valve Leakage Rate Test

Table 6.2.4-3 presents a listing of containment penetrations and their system isolation valves. The table identifies the test type to be performed on each penetration/valve as applicable. The provisions for testing the individual isolation valves (e.g., test connections and drains) are shown in Figure 6.2.4-1 and individual system piping and instrumentation diagrams (P&IDs).

6.2.6.4 Scheduling and Reporting of Periodic Tests

The proposed schedule and test report content requirements associated with performing pre-operational and periodic leakage rate testing are in accordance with the guidance provided in ANSI/ANS-56.8 (Ref. 6.2-31).

6.2.6.5 Special Testing Requirements

The US-APWR does not have a secondary containment or a sub-atmospheric primary containment, therefore there are no special testing requirements in addition to the requirements of subsections 6.2.6.1 through 6.2.6.4 above.

6.2.7 Fracture Prevention of Containment Pressure Vessel

Ferritic containment pressure boundary materials include the ferritic portions of the containment vessel and all penetration assemblies or appurtenances attached to the containment vessel; all piping, pumps and valves attached to the containment vessel, or to penetration assemblies out to and including the pressure boundary materials of any valve required to isolate the system and provide a pressure boundary for the containment function.

Ferritic containment pressure boundary materials meet the fracture toughness criteria and requirements for testing identified in Article NE-2000 of Section III, Division 1 (Ref. 6.2-32) or Article CC-2000 of Section III, Division 2 of the ASME Code (Ref. 6.2-33).

6.2.8 Combined License Information

Any utility that references the US-APWR design for construction and Licensed operation is responsible for the following COL items:

COL 6.2(1) The COL applicant is responsible to provide best estimates of these heatsinks in the COL application, update the FSAR based on as-built information and confirm the values are bounded by the values in containment analyses.

COL 6.2(2) The COL Applicant is responsible to prepare and implement and an initial test program consistent with DCD Chapter 14 in accordance with RG 1.68 to ensure Operational readiness.

COL 6.2(3) An NPSH evaluation of the CSS head loss is prepared by the COL applicant and the FSAR updated based on as-built information.

COL 6.2(4) Performance characteristics and effectiveness of the ECCS/CS strainer is evaluated by the COL applicant. The evaluation includes the effects of debris, hydraulic resistance, debris transport and vendor test data.

COL 6.2(5) Preparation of a cleanliness, housekeeping and foreign materials exclusion program is the responsibility of the COL applicant. This program addresses other debris sources such as latent debris inside containment. This program minimizes foreign materials in the containment.

COL 6.2(6) As built pipe run distances from outer containment isolation valve to the containment penetration are provided by the COL applicant.

COL 6.2(7) The operating principle and accuracy of the combustible gas analyzers are provided by the COL applicant.

COL 6.2(8) The COL applicant is responsible for the containment leakage rate testing program including, but not limited to, its preparation, exemptions, equipment, methods, procedures, conduct, limits, acceptance criteria, schedule, and reports.

COL 6.2(9) Selection, purchase, and installation of specific insulation products are controlled by administrative programs developed by any applicant referencing the certified US-APWR design for construction and operation.

COL 6.2(10) Inservice inspection of strainers, RWSP, vortex suppression devices and evidence of corrosion is the responsibility of any licensee who references the US-APWR certified design for construction and operation.

6.2.9 References

6.2-1 GOTHIC Containment Analysis Package User Manual, Version 7.2a(QA), NAI 8907-02, Rev. 17, Numerical Applications Inc., Richland, WA, January 2006.

6.2-2 GOTHIC Containment Analysis Package Technical Manual, Version 7.2a(QA), NAI 8907-06, Rev. 16, Numerical Applications Inc., Richland, WA, January 2006.

6.2-3 GOTHIC Containment Analysis Package Qualification Report, Version 7.2a(QA), NAI 8907 09, Rev. 9, Numerical Applications Inc., Richland, WA, January 2006.

6.2-4 LOCA Mass and Energy Release Analysis Code Applicability Report for US-APWR, MUAP-07012-P Rev. 0 (Proprietary) and MUAP-07012-NP Rev. 0 (Non-Proprietary), July 2007.

6.2-5 Letter from Gerald T. Bischof (Virginia Electric and Power Company) to United States Nuclear Regulatory Commission dated November 6, 2006, Transmittal of Approved Topical Report DOM-NAF-3 NP-A, "GOTHIC Methodology for Analyzing the Response to Postulated Pipe Ruptures inside Containment." ADAMS Accession No. ML063190467.

6.2-6 Schmitt, R.C., et al., Simulated Design Basis Accident Tests of the Carolinas Virginia Tube Reactor Containment Final Report, IN-1403, Idaho Nuclear Corporation, Idaho Falls, ID, 1970.

6.2-7 Design Report for the HDR Containment Experiments V21.1 to V21.3 and V42 to V44 with Specifications for the Pre-Test Computations, Report No. 3.280/82, January, 1982.

6.2-8 U.S. Nuclear Regulatory Commission, Marx, K.D., Air Currents Driven by Sprays in Reactor Containment Buildings, Sandia Report SAND 84-8258, NUREG/CR-4102, May 1986.

6.2-9 Letter from Anthony C. McMurtray (NRR) to Thomas Coutu (NMC) dated September 29, 2003, Kewaunee Nuclear Power Plant - Issuance of Amendment (TAC NO. MB6408), ADAMS Accession No. ML032681050.

6.2-10 Letter from John G. Lamb (NRR) to Thomas Coutu (NMC) dated February 27, 2004, Kewaunee Nuclear Power Plant – Issuance of Amendment Regarding Stretch Power Uprate (TAC NO. MB9031), ADAMS Accession No. ML040430633.

6.2-11 U.S. Nuclear Regulatory Commission, Interim Staff Position on Environmental Qualification of Safety Related Electrical Equipment, NUREG-0588 Rev 1, November 1980.

6.2-12 Ishii, M., One-Dimensional Drift-Flux Model and Constitutive Equations for Relative Motion Between Phases in Various Two-Phase Flow Regimes, ANL-77-47, October 1977.

6.2-13 Spillman, J.J., Evaporation from Free Falling Droplets, Aeronautical J, 1200:5, pp 181-185, 1984.

6.2-14 General Design Criteria for Nuclear Power Plants, Title 10, Code of Federal Regulations, 10CFR Part 50, Appendix A, January 2007 Edition.

6.2-15 U.S. Nuclear Regulatory Commission, Standard Review Plan for the Review of Safety Analysis Reports for Nuclear Power Plants, NUREG-0800, 6.2.1.3 MASS AND ENERGY RELEASE ANALYSIS FOR POSTULATED LOSS-OF-COOLANT ACCIDENTS (LOCAs), Revision 3, March 2007.

6.2-16 Small Break LOCA Methodology for US-APWR, MUAP-07013-P Rev. 0 (Proprietary) and MUAP-07013-NP Rev. 0 (Non-Proprietary), July 2007.

6.2-17 U.S. Nuclear Regulatory Commission, Standard Review Plan for the Review of Safety Analysis Reports for Nuclear Power Plants, NUREG-0800, 6.2.1.2 SUBCOMPARTMENT ANALYSIS, Revision 3, March 2007.

6.2-18 Subcompartment Analysis for US-APWR Design Confirmation, MUAP-07031, Rev. 0, Later.

6.2-19 Non-LOCA Methodology, MUAP-07010-P Rev. 0 (Proprietary) and MUAP-07010-NP Rev. 0 (Non-Proprietary), July 2007.

6.2-20 U.S. Nuclear Regulatory Commission, Standard Review Plan for the Review of Safety Analysis Reports for Nuclear Power Plants, NUREG-0800, Branch Technical Position 6-2, Minimum Containment Pressure Model for PWR ECCS Performance Evaluation, Revision 3, March 2007.

6.2-21 Construction Testing and Examination, Article CC-5000, ASME Code Section III, Division 2, American Society of Mechanical Engineers, 2004.

6.2-22 Structural Integrity Test of Concrete Containments, Article CC-6000, ASME Code Section III, Division 2, American Society of Mechanical Engineers, 2004.

6.2-23 U.S. Nuclear Regulatory Commission, Water Sources for Long-Term Recirculation Cooling Following a Loss-of-Coolant-Accident, Regulatory Guide 1.82, Rev. 3, November 2003.

6.2-24 Pressurized Water Reactor Sump Performance Evaluation Methodology, Nuclear Energy Institute, NEI 04-07, December 2004.

6.2-25 Inservice Testing Requirements, Title 10, Code of Federal Regulations, 10 CFR 50.55a(f), Nuclear Regulator Commission, U.S., Washington, DC, January 2007.

6.2-26 U.S. Nuclear Regulator Commission, Initial Test Programs for Water-Cooled Nuclear Power Plants, Regulatory Guide 1.68, March 2007.

6.2-27 U.S. Nuclear Regulatory Commission, Standard Review Plan for the Review of Safety Analysis Reports for Nuclear Power Plants, NUREG-0800, 6.2.4 Containment Isolation System Rev. 3, March 2007.

6.2-28 Primary Reactor Containment Leakage Testing for Water-Cooled Power Reactors, Title 10 Code of Federal Regulations Part 50, Appendix J, U.S. Nuclear Regulatory Commission, January 2007 Edition.

6.2-29 U.S. Nuclear Regulatory Commission, Control of Combustible Gas Concentrations in Containment, Regulatory Guide 1.7, Rev. 3, March 2007.

6.2-30 U.S. Nuclear Regulator Commission, Performance-Based Containment Leak-Test Program, Regulatory Guide 1.163, September 1995.

6.2-31 Containment System Leakage Testing Requirements, American National Standards Institute/American Nuclear Society, ANSI/ANS-56.8-2002, January 2002.

6.2-32 Material, Article NE-2000, ASME Code Section III, Division 1, American Society of Mechanical Engineers, July 2006.

6.2-33 Material, Article CC-2000, ASME Code Section III, Division 2, American Society of Mechanical Engineers, July 2005.

Table 6.2.1-1 Summary of Calculated Containment and Pressure Results for a Range of Postulated Piping Failure Scenarios

Parameter	Calculated Value
Pipe Break Location and Break Type	Cold Leg (Pump Suction), Double Ended
Design Pressure, psig	68
Peak Pressure, psig	57.5
Peak Atmospheric Temperature, °F	282
Time of Peak Pressure, seconds	1964
Energy Released to Containment up to the End of Blowdown, Btu	4.76×10^8

Table 6.2.1-2 Basic Specifications of PCCV

US-APWR Specification	Value
A. PCCV	
Design Conditions	
Design Pressure [Pd]	68 psig
Test Pressure [Pt]	78.2 psig
Design External Pressure	3.9 psig
Design Temperature	300°F
Dimensions	
Inner Diameter	149 ft.- 2 in.
Inner Height	226 ft.- 5 in.
Wall Thickness [Cylinder]	4 ft.- 4 in.
Wall Thickness [Dome]	3 ft.- 8 in. 4 ft.- 4 in.
Liner Thickness	0.25 in.
Large Openings	
Equipment Hatch (1)	ID 27 ft.- 11 in.
Personnel airlocks (2)	ID 8.5 ft.
Free Volume	2.80×10^6 ft^3
Design leakage rate	0.1% air mass/24 hours
Design life	60 years
Material Properties	
Concrete Design Strength	
PCCV	7,000 psi
BASEMAT	4,000 psi
Reinforcement	ASTM A615 Gr.60
Liner plate	ASTM A516 Gr.60
Tendon Specifications	
PS System	VSL or (BBR)
Tendon Capacity	13 MN CLASS

Table 6.2.1-3 RWSP Design Features

Parameters	Value
Nominal Liquid Surface Area	4985 ft^2
Normal Liquid Volume (Including water below 0% level)	651,000 gallons
Return Water on the Way to RWSP (During a postulated accident)	137,000 gallons
Ineffective Pool	297,000 gallons
Minimum Liquid Volume (During a postulated accident)	216,000 gallons

Table 6.2.1-4 Initial Conditions for Maximum Containment Pressure Analytical Model

Parameters	Value	Setting for Conservatism
A. Reactor Coolant System		
1. Reactor Power Level, MWt	4,451×1.02	Max (102%)
2. Average Coolant Temperature, °F	583.8	Max
3. Mass of Reactor Coolant System Liquid, lbm	9.18×10^5	Max
4. Mass of Reactor Coolant System Steam, lbm	1.02×10^4	
5. Liquid Plus Steam Energy,* Btu	4.41×10^8	Max
B. Containment		
1. Pressure, psig	2 (LOCA)	Max
	0 (MSLB)	Min
2. Temperature, °F	120	Max
3. Relative Humidity, %	0	Min
4. Service Water Temperature, °F	95	Max
5. Refueling Water Temperature, °F	120	Max
6. Outside Temperature, °F	Not Considered	Thermal Insulation is Assumed.
C. Stored Water (as applicable)		
1. RWSP water volume, ft^3** (gallon)	44,000 (329,000)	Min
2. Accumulators water volume, ft^3	1.26×10^4	Min

Notes:

* All energies are relative to 32°F [0°C].

** This includes RWSP minimum inventory and return water, plus a safety margin, but does not include the ineffective pit volume.

Table 6.2.1-5 Engineered Safety Feature Systems Information (Sheet 1 of 2)

US APWR Specification	Value	
	Full Capacity	Value Used for Containment Design Evaluation
I. Passive Safety Injection System		
A. Number of Accumulators	4	4
B. Pressure, psig	695	586
II. Active Safety Injection Systems		
A. High Head Injection System (HHIS)		
1. Number of Lines	4	2
2. Number of Pumps	4	2
3. Flow Rate, gpm/train *	1,540	1,259
4. Response Time, sec (after analytical limit of SI signal reached)	3 (Offsite Power Available)	118
III. Containment Spray System (CSS)		
A. Number of Lines	4	2
B. Number of Pumps	4	2
C. Number of Headers	1	1
D. Flow Rate, gpm	9,800 (4 pumps)	5,290 (2 pumps)
E. Response Time, sec (after analytical limit of SI signal reached)	5 (Offsite Power Available)	243
IV. Refueling Water Storage Pit (RWSP)		
A. Liquid volume. Gallons	651,000	329,000
B. Liquid surface area ,ft^2	4,985	Interface Area is Ignored
V. Containment		
A. Free Volume (Air Volume), ft^3	2,800,000	2,743,000

Notes:
* HHIS flow rate is the value when RCS pressure is at 0psig.
Hot leg switch-over is conservatively not assumed, which leads to ignoring steam condensation with the hot leg injection.

Table 6.2.1-5 Engineered Safety Feature Systems Information (Sheet 2 of 2)

US APWR Specification	Value	
	Full Capacity	Value Used for Containment Design Evaluation
VI. Heat Exchangers		
1. Systems		
(1) Containment Spray Systems	-	-
(2) Component Cooling Water Systems	-	-
2. Type		
(1) Containment Spray Heat Exchanger	Tube and Shell	Tube and Shell
(2) Component Cooling System Heat Exchanger	Counter Flow	Counter Flow
3. Number		
(1) Containment Spray Heat Exchanger	4	2
(2) Component Cooling System Heat Exchanger	4	2
4. Heat Transfer Area Times Overall Heat Transfer Coefficient, Btu/hr-°F/unit		
(1) Containment Spray Heat Exchanger	More than 1.85×10^6	1.85×10^6
(2) Component Cooling System Heat Exchanger	More than 7.05×10^6	7.05×10^6
5. Flow Rate:		
(1) Containment Spray Heat Exchanger		
1. Recirculation Side, gpm/unit	More than 2,645	2,645
2. Exterior Side, gpm/unit	More than 4,162	4,162
(2) Component Cooling System Heat Exchanger		
a. Recirculation Side, gpm/unit	More than 12,500	12,500
b. Exterior Side, gpm/unit	More than 10,000	10,000
6. Source of Cooling Water	Service Water	Service Water
7. Flow Begins after SI setpoint reached, seconds		
(1) Containment Spray Systems	5	243
(2) Component Cooling Water Systems	5	243

Table 6.2.1-6 Summary of LOCA Transients Evaluated

Break Location	Cold Leg (Pump Suction)	Cold Leg (Pump Suction)	Cold Leg (Pump Suction)	Hot Leg
Break Size and Type	C_D=1.0 Double Ended Guillotine	C_D=0.6 Double Ended Guillotine	3ft^2 Split	C_D=1.0 Double Ended Guillotine
Offsite Power	Lost	Lost	Lost	Lost
Assumption for Out of service*	1 Emergency Generator	1 Emergency Generator	1 Emergency Generator	N/A
Single Failure	1 Emergency Generator	1 Emergency Generator	1 Emergency Generator	N/A
Safety Injection	2 SIP Operation Minimum Safeguard	2 SIP Operation Minimum Safeguard	2 SIP Operation Minimum Safeguard	N/A
Peak Pressure, psia (psig)	72.2 (57.5)	71.8 (57.1)	72.0 (57.3)	70.5 (55.8)
Peak Atmospheric Temperature, °F	282	282	282	280
Peak RWSP Water Temperature, °F	251	251	256	-
24 hours Pressure, psia (psig)	23.6 (8.9)	Expected to be sufficiently low	Expected to be sufficiently low	Expected to be sufficiently low
Parameters vs time:				
Containment Pressure	Figure 6.2.1-18	Figure 6.2.1-21	Figure 6.2.1-24	Figure 6.2.1-27
Atmospheric Temperature	Figure 6.2.1-19	Figure 6.2.1-22	Figure 6.2.1-25	Figure 6.2.1-28
RWSP Water Temperature	Figure 6.2.1-20	Figure 6.2.1-23	Figure 6.2.1-26	Figure 6.2.1-29

* Out of service basis for the limiting conditions (maintenance or operation surveillance)

Table 6.2.1-7 Summary of Sensitivity of ECCS Conditions on the Containment Pressure and Temperature

Case	Limiting Case	HHSI Max Safeguards	Accumulator Max Water	Accumulator Max Flow
Break Location	Pump Suction	Pump Suction	Pump Suction	Pump Suction
Break Size and Type	C_D=1.0 Double Ended Guillotine	C_D=1.0 Double Ended Guillotine	C_D=1.0 Double Ended Guillotine	C_D=1.0 Double Ended Guillotine
Offsite Power	Lost	Lost	Lost	Lost
Assumption for Out of service*	1 Emergency Generator	1 Containment Heat Removal System	1 Emergency Generator	1 Emergency Generator
Single Failure	1 Emergency Generator	1 Containment Heat Removal System	1 Emergency Generator	1 Emergency Generator
Safety Injection	2 SIP Operation Minimum Safeguard	4 SIP Operation Maximum Safeguard	2 SIP Operation Minimum Safeguard	2 SIP Operation Minimum Safeguard
Accumulator Water Volume	Minimum	Minimum	Maximum	Minimum
Accumulator Pressure	Minimum	Minimum	Minimum	Maximum
Accumulator Line Resistance	Maximum	Maximum	Maximum	Minimum
Peak Pressure, psia (psig)	72.2 (57.5)	67.8 (53.1)	71.9 (57.2)	72.1 (57.4)
Peak Atmospheric Temperature, °F	282	276	282	281
Peak RWSP Water Temperature, °F	251	252	251	251
24 hours Pressure, psia (psig)	23.6 (8.9)	Expected to be sufficiently low	Expected to be sufficiently low	Expected to be sufficiently low
Parameters vs time:				
Containment Pressure	Figure 6.2.1-18	Figure 6.2.1-30	Figure 6.2.1-33	Figure 6.2.1-36
Atmospheric Temperature	Figure 6.2.1-19	Figure 6.2.1-31	Figure 6.2.1-34	Figure 6.2.1-37
RWSP Water Temperature	Figure 6.2.1-20	Figure 6.2.1-32	Figure 6.2.1-35	Figure 6.2.1-38

* Out of service basis for the limiting conditions (maintenance or operation surveillance)

Table 6.2.1-8 Description and Summary Results For Evaluations of Various Pipe Sizes and Break Locations for Postulated Secondary Steam System Piping Failures (includes Plant Power Levels) (Sheet 1 of 2)

Case	Case 1	Case 2	Case 3	Case 4	Case 5
Break Type	Double Ended	Double Ended	Double Ended	Double Ended	Double Ended
C_D or Area	1.0	1.0	1.0	1.0	1.0
Power Level	102%	75%	50%	25%	0%
Offsite Power	Available	Available	Available	Available	Available
Assumption for Out of service *	1 Containment Heat Removal System	1 Containment Heat Removal System	1 Containment Heat Removal System	1 Containment Heat Removal System	1 Containment Heat Removal System
Single Failure *	1 Containment Heat Removal System	1 Containment Heat Removal System	1 Containment Heat Removal System	1 Containment Heat Removal System	1 Containment Heat Removal System
Safety Injection	2 SIP Operation Minimum Safeguard	2 SIP Operation Minimum Safeguard	2 SIP Operation Minimum Safeguard	2 SIP Operation Minimum Safeguard	2 SIP Operation Minimum Safeguard
Peak Pressure, psia (psig)	62.8 (48.1)	61.4 (46.7)	61.3 (46.6)	61.9 (47.2)	63.4 (48.7)
Peak Atmospheric Temperature, °F	355	349	348	348	347
24 hours Pressure, psia (psig)	Expected to be sufficiently low	Expected to be sufficiently low	Expected to be sufficiently low	Expected to be sufficiently low	Expected to be sufficiently low
Parameters vs time:					
Containment Pressure	Figure 6.2.1-39	Figure 6.2.1-42	Figure 6.2.1-45	Figure 6.2.1-48	Figure 6.2.1-51
Atmospheric Temperature	Figure 6.2.1-40	Figure 6.2.1-43	Figure 6.2.1-46	Figure 6.2.1-49	Figure 6.2.1-52
RWSP Water Temperature	Figure 6.2.1-41	Figure 6.2.1-44	Figure 6.2.1-47	Figure 6.2.1-50	Figure 6.2.1-53

* Conditions for the single failure and out of service are independently assumed for the containment analysis and the mass and energy analysis. Conditions for the containment analyses are described above.

Table 6.2.1-8 Description and Summary Results For Evaluations of Various Pipe Sizes and Break Locations for Postulated Secondary Steam System Piping Failures (Includes Plant Power Levels) (Sheet 2 of 2)

Case	Case 6	Case 7	Case 8	Case 9
Break Type	Split	Split	Double Ended	Double Ended
C_D or Area	1.65 ft^2	1.71 ft^2	1.0	1.0
Power Level	102%	0%	102%	0%
Offsite Power	Available	Available	Lost	Lost
Assumption for Out of service*	1 Containment Heat Removal System	1 Containment Heat Removal System	1 Containment Heat Removal System	1 Containment Heat Removal System
Single Failure	1 Containment Heat Removal System	1 Containment Heat Removal System	1 Containment Heat Removal System	1 Containment Heat Removal System
Safety Injection	2 SIP Operation Minimum Safeguard	2 SIP Operation Minimum Safeguard	2 SIP Operation Minimum Safeguard	2 SIP Operation Minimum Safeguard
Peak Pressure, psia (psig)	61.7 (47.0)	61.8 (47.1)	55.5 (40.8)	53.1 (38.4)
Peak Atmospheric Temperature, °F	328	324	355	347
24 hours Pressure, psia (psig)	Expected to be sufficiently low	Expected to be sufficiently low	Expected to be sufficiently low	Expected to be sufficiently low
Parameters vs time:				
Containment Pressure	Figure 6.2.1-54	Figure 6.2.1-57	Figure 6.2.1-60	Figure 6.2.1-63
Atmospheric Temperature	Figure 6.2.1-55	Figure 6.2.1-58	Figure 6.2.1-61	Figure 6.2.1-64
RWSP Water Temperature	Figure 6.2.1-56	Figure 6.2.1-59	Figure 6.2.1-62	Figure 6.2.1-65

* Conditions for the single failure and out of service are independently assumed for the containment analysis and the mass and energy analysis. Conditions for the containment analyses are described above.

Table 6.2.1-9 Passive Heat Sinks used in Maximum Pressure Containment Analyses (Sheet 1 of 2)

Passive Heat Sinks	Heat Transfer Area (ft^2)	Material	Thickness (in)
(1) Containment Dome	33,213	Paint Carbon Steel Air Gap Concrete	0.0118 0.257 0.02 44.1
(2) Containment Cylinder	56,558	Paint Carbon Steel Air Gap Concrete	0.0118 0.425 0.02 52.0
(3) Thick Concrete - Internal Separation Walls, Connection Path, Containment Drain Pump Room	12,971	Paint Concrete	0.0394 14.9
(4) Thin Concrete - Internal Separation Walls, Letdown Hx Rooms, Regenerative Hx Rooms	14,579	Paint Concrete	0.0394 7.35
(5) Lined Concrete (Stainless Steel) - Web Plate, Reactor Vessel Cavity Walls	6,303	Stainless Steel Carbon Steel Air Gap Concrete	0.118 0.472 0.02 22.7
(6) Lined Concrete (Carbon Steel, Thick) - Primary Shield Walls, Secondary Shield Walls, Containment Drain Tank Rooms, Pressurizer Room, Missile Shield, Deck Plates, Reactor Vessel Lower Cavity Walls, SG Compartment	67,981	Paint Carbon Steel Air Gap Concrete	0.0118 0.574 0.02 20.2
(7) Lined Concrete (Carbon Steel, Thin) - Deck Plates	107	Paint Carbon Steel Air Gap Concrete	0.0118 0.311 0.02 7.99
(8) Internal Structure (Carbon Steel Thickness greater equals 2-inch) - Equipment Hatch, Air Lock, Accumulator Tanks, SG Supports, Level Switch	7,815	Paint Carbon Steel	0.0118 3.17
(9) Internal Structure (Carbon Steel Thickness between 2-inch and 1.2-inch) - Vents, Reactor Vessel Supports, Polar Crane, RCP Lower Bracket, RCP Supports	18,790	Paint Carbon Steel	0.0118 1.52
(10) Internal Structure (Carbon Steel Thickness between 1.2-inch and 0.4-inch) - Air Lock, Accumulator Column Supports, Excess Letdown Hx, Manipulator Crane Rail, Refueling Machine, Piping Supports, Covering Steel, Ring Guarder, Vent, NIS Electrical Horn, ITV Instruments, SG Supports, Pressurizer Supports, RCP Upper Bracket, RCP Flame, Let Down Hx	122,288	Paint Carbon Steel	0.0118 0.468

Table 6.2.1-9 Passive Heat Sinks used in Maximum Pressure Containment Analyses (Sheet 2 of 2)

Passive Heat Sinks	Heat Transfer Area (ft^2)	Material	Thickness (in)
(11) Internal Structure (Carbon Steel Thickness between 0.4-inch and 0.08-inch) - Containment Drain Tank Column Supports, Excess Letdown Hx Column Supports, Refueling Crane, Duct Supports, Duct Connection Flanges, HAVC Units, Fans, Connecting Box, I/C Piping Supports, Cable Tubes, Penetration Boxes, Electrical Boards, Trans, Motor, Luminaires, I/C Supports, Electrical Boxes, I/C Rack, Stairways, RCP Duct, RCP Air Cooler, RCP Flywheel Cover, NIS Source Range Detector, Generative Hx Support	225,084	Paint Carbon Steel	0.0118 0.234
(12) Internal Structure (Carbon Steel Thickness less than 0.08-inch) - Gratings, Ducts, Fans, HAVC Unts, ICIS Boxes, Cable Trays, Duct Connecting Flanges, I/C Devices, ITV Instruments, NIS Air Horn	168,724	Paint Carbon Steel	0.0118 0.0504
(13) Internal Structure (Stainless Steel) - Containment Drain Tank, RCP Purged Water Tank, Refueling Machine, Refueling Crane, RMS Indicators, ICIS Instruments, DRPI Tube, Transmitters, Level Switch, Lumimaires, Temporary Fuel Rack	5,914	Stainless Steel	0.176
(14) Copper - Coils, Copper Tubes, Luminaires, Cooling Coil's Fins	166,862	Paint Copper	0.0118 0.008
(15) Uninsulated Cold-Water-Filled Piping (Stainless Steel)	8,749	Stainless Steel	0.323
(16) Empty Piping (Stainless Steel)	654	Stainless Steel	0.126
(17) Uninsulated Cold-Water-Filled Piping (Carbon Steel)	441	Paint Carbon Steel	0.0118 0.197
(18) Empty Piping (Carbon Steel)	596	Paint Carbon Steel	0.0118 0.138
(19) Aluminum - NIS Power Range Detector	29	Paint Aluminum	0.0118 0.118

Note: The COL applicant is responsible to provide best estimates of these heat sinks in the COL application, update the FSAR based on as-built information and confirm the values are bounded by the values in containment analyses.

Table 6.2.1-10 Passive Heat Sinks Material Properties

Material	Density, lb/ft^3	Specific Heat, Btu/lb-°F	Thermal Conductivity, Btu/hr-ft-°F
Paint	115	0.26	0.17
Carbon Steel	490	0.12	26
Stainless Steel	494	0.12	9.2
Concrete	145	0.16	0.8
Copper	558	0.1	205
Aluminum	169	0.22	128
Air	0.07	0.24	0.02

Table 6.2.1-11 Selected Key Events for the Worst-Case Postulated DEPSG Break

Event	Time, seconds
Beginning of the Accumulator Injection (Broken Loop)	22.6
Beginning of the Accumulator Injection (Intact Loop)	22.9
End of Blowdown/Beginning of Reflood	31.6
Beginning of the Accumulator Small Flow Injection (Broken Loop)	84.2
Beginning of the Accumulator Small Flow Injection (Intact Loop)	84.4
Beginning of the Safety Injection	121.0
Beginning of the Containment Spray	246.0
End of the Core Reflood	265.5
Peak Pressure (End of Steam Generator Energy Release)	1,964
Accumulator Emptied (Broken Loop)	2,185
Accumulator Emptied (Intact Loop)	2,216
Time of Depressurization of the Containment at 50 Percent of Peak Pressure	14,550

Table 6.2.1-12 Distribution of Energy at Selected Locations within Containment for the Worst-Case Postulated DEPSG Break

Energy Unit : Million Btu

	Phase	Prior to LOCA	End of Blowdown	End of Core Reflood	At Peak Pressure	1 Day into Recirc.
	Time (seconds)	0.00	31.60	265.54	1963.7	86400
Initial Energy		1287.49	1287.49	1287.49	1287.49	1287.49
Added Energy	Energy Generated during Shutdown from Decay Heat	0.00	15.58	49.83	224.04	3254.97
	Heat from Secondary	0.00	26.04	26.04	26.04	26.04
Total Available	(Initial Energy + Added)	1287.49	1329.11	1363.36	1537.57	4568.50
RCS Energy Distribution	Reactor Coolant Internal Energy	441.38	17.09	58.37	80.46	70.92
	Accumulator Internal Energy	47.09	41.27	8.24	0.81	0.00
	Energy Stored in Core	43.40	23.08	7.58	5.56	3.77
	Energy Stored in RCS Structure	267.87	255.87	183.82	104.11	63.84
	Steam Generator Coolant Internal Energy	349.58	379.25	318.99	197.89	141.91
	Energy Stored in Steam Generator Metal	138.16	136.48	117.14	77.51	65.60
RCS Total Contents		1287.49	853.03	694.16	466.34	346.04
Total Energy Released from RCS to Containment (Total Available - RCS Total Contents)		0.00	476.08	669.20	1071.23	4222.46
Containment Energy Distribution	Energy Content of Containment Atmosphere	0.00	407.02	333.28	356.81	37.40
	Energy Content of RWSP Water	238.85	263.27	391.54	600.15	550.34
	Energy Content of Containment and Internal Structures	0.00	39.53	155.47	265.34	342.66
	Energy Removed by RHR Coolers	0.00	0.00	0.34	52.81	3515.38
Total Energy Received from RCS		0.00	470.97	641.78	1036.25	4206.93

Table 6.2.1-13 Selected Key Events for the Worst-Case Postulated DEHLG Break

Events	Time, seconds
Beginning of the Accumulator Injection (Broken Loop)	17.1
Beginning of the Accumulator Injection (Intact Loop)	17.2
Peak Containment Pressure during the Blowdown Phase	24.0
End of Blowdown	27.0

Table 6.2.1-14 Distribution of Energy at Selected Locations within Containment for the Worst-Case Postulated DEHLG Break

Energy Unit : Million Btu

	Phase	Prior to LOCA	End of Blowdown
	Time(seconds)	0.00	26.96
Initial Energy		1287.49	1287.49
Added Energy	Energy Generated during Shutdown from Decay Heat	0.00	14.28
	Heat from Secondary	0.00	21.65
Total Available	(Initial Energy + Added)	1287.49	1323.41
RCS Energy Distribution	Reactor Coolant Internal Energy	441.38	23.67
	Accumulator Internal Energy	47.09	40.36
	Energy Stored in Core	43.40	17.70
	Energy Stored in RCS Structure	267.87	251.93
	Steam Generator Coolant Internal Energy	349.58	365.41
	Energy Stored in Steam Generator Metal	138.16	133.24
RCS Total Contents		1287.49	832.32
Total Energy Released from RCS to Containment (Total Available - RCS Total Contents)		0.00	491.09
Containment Energy Distribution	Energy Content of Containment Atmosphere	0.00	423.18
	Energy Content of RWSP Water	238.85	260.67
	Energy Content of Containment and Internal Structures	0.00	37.79
	Energy Removed by RHR Coolers	0.00	0.00
Total Energy Received from RCS		0.00	482.79

Table 6.2.1-15 Selected Key Events for the Secondary Steam System Piping Failure Transient Case 5 - Highest Containment Pressure

Event	Time, seconds
Steam Pipe Rupture Occurs	0.0
Low Steamline Pressure Analysis Limit Reached	1.5
High Containment Pressure setpoint reached	1.9
High-High Containment Pressure setpoint reached	7.0
Main steam isolation valves closed	10.0
Main feedwater isolation complete	10.0
Peak Temperature	10.0
Automatic Isolation of EFW to Faulted SG	62.9
High-3 Containment Pressure setpoint reached	134
Containment Spray start	253
Faulted SG Water Mass Depleted	404
Peak Pressure	404

Table 6.2.1-16 Selected Key Events for the Secondary Steam System Piping Failure Transient Case 1 - Highest Containment Temperature.

Event	Time, seconds
Steam Pipe Rupture Occurs	0.0
High Containment Pressure setpoint reached	2.1
Low Steamline Pressure Analysis Limit Reached	2.5
High-High Containment Pressure setpoint reached	8.2
Main steam isolation valves closed	11.0
Main feedwater isolation complete	11.0
Peak Temperature	11.0
Automatic Isolation of EFW to Faulted SG	68.7
High-3 Containment Pressure setpoint reached	91.5
Faulted SG Water Mass Depleted	192
Peak Pressure	194
Containment Spray start	210

Table 6.2.1-17 Steam Generator Subcompartment and Pressurizer Subcompartment Break Line Condition (Sheet 1 of 2)

Subcompartment	Break Line	Line Spec	Press. psi	Temp. °F	fluid
Steam Generator Subcompartment	Main Coolant Pipe-Hot Leg	31ID-RC-2505R	2235	617.0	Subcooled Water
	Main Coolant Pipe-Cold Leg	31ID-RC-2505R	2235	550.6	Subcooled Water
	Main Coolant Pipe-Cross-over Leg	31ID-RC-2505R	2235	550.6	Subcooled Water
	Pressurizer Surge Line	16-RC-2501R	2235	653.0	Subcooled Water
	Accumulator Injection Line	14-RC-2501R	2235	550.6	Subcooled Water
		14-SI-2501R	2235	550.6	Subcooled Water
		14-SI-2511R	2235	120.0	Subcooled Water
	RHR Pump Inlet Line	10-RC-2501R	2235	617.0	Subcooled Water
	RHR Pump Outlet Line	8-RC-2501R	2235	550.6	Subcooled Water
	Direct Vessel Injection Line	4-RC-2501R	2235	550.6	Subcooled Water
	SI High Head Injection Line	4-RC-2501R	2235	617.0	Subcooled Water
	SI Emergency Letdown Line	2-RC-2501R	2235	617.0	Subcooled Water
	Pressurizer Spray Line	6-RC-2501R	2235	550.6	Subcooled Water
	Loop Drain Line	2-RC-2501R	2235	550.6	Subcooled Water
	Charging Line	4-RC-2501R	2235	550.6	Subcooled Water
		4-CS-2501R	2235	550.6	Subcooled Water
		4-CS-2561R	2235	464.0	Subcooled Water
	Letdown Line	3-RC-2501R	2235	550.6	Subcooled Water
		3-CS-2501R	2235	550.6	Subcooled Water
		3-CS-2561R	2235	550.6	Subcooled Water
		3-CS-601R	350	269.1	Subcooled Water
		4-CS-601R	350	115.0	Subcooled Water
	RCP Seal Water Injection Line	1_1/2-CS-2501R	2600	130.0	Subcooled Water
		1_1/2-CS-2511R	2600	130.0	Subcooled Water
	Feedwater Line	16-FW-1525N	1185	568.0	Saturated Water
	Main Steam Line	32-MS-1532N	907	535.0	Steam
	SG Blowdown Line	3-BD-1532N	907	535.0	Steam
		4-BD-1532N	907	535.0	Steam

Table 6.2.1-17 Steam Generator Subcompartment and Pressurizer Subcompartment Break Line Condition (Sheet 2 of 2)

Subcompartment	Break Line	Line Spec	Press. psi	Temp. °F	fluid
Subcompartment under Pressurizer Subcompartment	Pressurizer Surge Line	16-RC-2501R	2235	653.0	Subcooled Water
Pressurizer Subcompartment	Pressurizer Spray Line	6-RC-2501R	2235	550.6	Subcooled Water
	Pressurizer Auxiliary Spray Line	3-RC-2501R	2235	550.6	Subcooled Water
	Pressurizer Safety Valve Inlet Line	6-RC-2501R	2235	653.0	Subcooled Water
	Pressurizer Safety Depressurization Line	8-RC-2501R	2235	653.0	Subcooled Water
		6-RC-2501R	2235	653.0	Subcooled Water
		4-RC-2501R	2235	653.0	Subcooled Water
		3-RC-2501R	2235	653.0	Subcooled Water

Table 6.2.1-18 Break Mass and Energy Flow for the Blowdown Phase of the DEPSG Break (Sheet 1 of 3)

Time (sec)	Break Flow (Reactor Vessel Side)		Break Flow (Steam Generator Side)	
	Mass (lbm/sec)	Enthalpy (Btu/lbm)	Mass (lbm/sec)	Enthalpy (Btu/lbm)
0.0	0.0	0.0	0.0	0.0
0.00037	39367.7	551.1	47451.3	553.0
0.00102	39475.9	548.5	101757.9	550.6
0.0112	39130.1	548.1	42091.4	548.5
0.0211	36128.7	547.7	41741.5	548.6
0.0515	23343.8	545.7	41730.0	548.8
0.0611	21272.1	546.1	41772.5	549.0
0.0711	20482.9	546.9	49613.7	549.3
0.0912	20875.8	547.9	49573.9	549.5
0.111	21872.9	548.2	52298.0	549.9
0.161	23599.5	548.5	53529.7	550.8
0.222	24642.8	548.5	53292.9	552.1
0.301	25143.0	548.8	52771.2	554.1
0.351	25174.2	549.0	52247.1	555.6
0.451	24831.4	549.4	51440.1	558.8
0.611	23851.7	549.8	49667.7	564.7
0.701	23376.9	550.0	48773.6	568.3
0.801	22955.5	550.1	47097.0	572.2
0.892	22593.8	550.2	45168.5	575.4
1.00	22156.2	550.2	45392.0	579.0
1.09	21789.4	550.3	45312.7	581.6
1.27	21309.6	550.4	44761.2	586.5
1.75	20552.4	550.6	42786.2	600.7
2.20	20134.6	550.7	40939.5	616.1
2.32	20005.2	550.7	40291.3	620.9
2.61	19758.0	550.8	38300.3	634.5
2.82	19471.7	550.9	36444.7	646.1
3.30	18855.6	551.2	31566.7	676.2
3.37	18744.9	551.2	30574.1	680.5
3.51	18535.4	551.3	27856.7	689.3
3.59	18426.4	551.4	26605.1	694.5
3.78	18178.5	551.6	24039.6	705.4
3.98	17916.9	551.8	21866.8	714.3
4.16	17712.0	552.0	20321.5	721.2
4.32	17550.1	552.2	19287.2	726.8
4.56	17298.1	552.5	18071.0	733.8
4.86	17033.0	552.9	16955.9	740.8

Table 6.2.1-18 Break Mass and Energy Flow for the Blowdown Phase of the DEPSG Break (Sheet 2 of 3)

Time (sec)	Break Flow (Reactor Vessel Side)		Break Flow (Steam Generator Side)	
	Mass (lbm/sec)	Enthalpy (Btu/lbm)	Mass (lbm/sec)	Enthalpy (Btu/lbm)
5.12	16808.2	553.3	16226.0	745.1
5.60	16450.3	554.1	15301.9	749.0
5.92	16242.6	554.7	14891.4	749.1
6.14	16098.5	555.1	14686.4	748.0
6.68	15794.6	556.1	14368.9	743.1
7.22	15531.3	557.1	14258.5	735.7
7.62	15350.4	557.9	14294.0	729.0
7.98	15206.5	558.6	14488.9	722.0
8.02	15196.1	558.7	14723.8	721.5
8.26	15128.7	559.1	15040.2	716.4
8.34	15756.0	559.7	15093.6	718.5
8.40	16029.0	559.7	15026.1	722.8
8.52	16090.0	559.8	14553.7	739.5
8.78	16004.4	560.2	12886.7	789.0
8.90	15895.1	560.4	12425.1	801.9
9.08	15710.5	560.6	12142.2	807.6
9.86	14727.4	561.8	11967.7	802.2
10.1	14508.6	562.2	11851.1	802.3
10.5	14119.1	562.5	11638.6	804.5
11.2	13710.6	562.7	11289.3	808.4
11.6	13507.9	562.5	11339.8	795.6
11.9	13352.6	562.3	11560.2	778.4
12.5	13080.4	562.0	12052.3	747.6
13.1	12837.1	561.8	12244.3	729.1
13.6	12635.0	561.6	12079.1	722.0
14.5	12335.9	561.6	11422.7	725.2
15.1	12101.4	561.7	10849.1	734.6
16.1	11666.0	561.9	10022.9	753.8
16.8	11348.1	562.2	9476.6	769.2
17.7	10874.8	562.8	8789.5	787.7
18.4	10529.9	563.4	8373.0	794.6
19.0	10210.8	564.1	8052.5	797.2
20.0	9673.4	566.4	7519.7	802.2
20.6	9374.9	568.2	7234.7	804.5
21.8	8726.0	573.3	6752.6	812.2
22.0	8449.6	575.0	6591.6	817.4
22.1	8455.7	575.8	6529.7	820.1

Table 6.2.1-18 Break Mass and Energy Flow for the Blowdown Phase of the DEPSG Break (Sheet 3 of 3)

Time (sec)	Break Flow (Reactor Vessel Side)		Break Flow (Steam Generator Side)	
	Mass (lbm/sec)	Enthalpy (B/lbm)	Mass (lbm/sec)	Enthalpy (Btu/lbm)
22.4	8174.3	575.8	6346.2	827.6
22.5	8121.9	576.2	6197.9	834.7
23.2	7506.8	565.4	5537.6	857.3
23.5	7418.9	546.8	5363.3	856.3
23.9	7051.1	525.4	5304.6	868.6
24.1	6856.5	513.9	5096.0	903.6
24.3	6495.3	498.7	4570.4	988.9
24.6	6032.6	482.1	3837.4	1123.2
24.9	5684.8	470.7	3371.5	1203.1
25.2	5326.6	456.8	2966.9	1233.0
25.6	4825.7	439.8	2576.6	1242.3
26.0	4511.2	428.2	2360.9	1246.8
26.3	4022.2	420.6	2222.3	1249.5
26.6	3691.6	407.9	2051.7	1252.1
26.7	3693.4	402.7	1970.7	1253.3
27.1	3875.1	388.7	1753.1	1256.9
27.3	3818.1	383.4	1620.9	1258.7
28.1	3258.2	364.5	1223.5	1265.0
28.3	3013.6	356.1	1089.7	1266.4
28.7	2733.2	342.7	863.0	1268.5
29.0	2602.6	334.0	746.2	1269.7
29.2	2413.3	327.3	678.6	1270.3
29.6	1782.4	315.2	578.3	1271.8
29.9	1036.9	308.6	502.1	1272.6
30.2	0.0	0.0	408.8	1273.5
31.6	0.0	0.0	0.0	0.0

Table 6.2.1-19 Break Mass and Energy Flow for the Blowdown Phase of the DEHLG Break (Sheet 1 of 3)

Time (sec)	Break Flow (Reactor Vessel Side)		Break Flow (Steam Generator Side)	
	Mass (lbm/sec)	Enthalpy (Btu/lbm)	Mass (lbm/sec)	Enthalpy (Btu/lbm)
0.0	0.0	0.0	0.0	0.0
0.0003	29413.6	642.1	29416.9	642.1
0.0010	53209.4	640.8	53208.5	640.8
0.0113	51654.5	641.0	45827.2	641.3
0.0213	53072.8	640.9	38955.8	643.7
0.0315	62620.7	640.2	34049.8	647.6
0.0411	61665.1	639.1	31926.0	651.1
0.0713	58628.1	636.0	31916.4	654.9
0.0813	58489.5	635.1	32032.7	655.3
0.102	53909.5	633.2	32202.3	656.0
0.141	52266.8	630.8	31855.6	657.0
0.171	52789.8	629.6	31600.9	657.6
0.211	51843.7	628.1	30657.1	658.3
0.282	51187.3	626.7	28167.9	659.6
0.331	50572.1	625.9	27142.3	659.8
0.401	49679.0	625.3	26165.6	659.2
0.492	48852.5	624.8	25233.4	657.6
0.561	48414.1	624.6	24638.1	655.9
0.691	47994.8	625.2	23932.7	651.9
0.811	47314.2	627.4	23387.8	648.5
0.882	46560.0	629.4	23173.7	646.5
1.00	44992.1	633.6	22910.1	643.4
1.14	43674.6	639.9	22554.9	640.2
1.33	42419.1	647.9	22257.2	636.4
1.48	41165.2	653.8	22117.9	633.6
1.74	38429.6	663.7	21927.7	629.4
2.33	33504.5	685.8	21726.6	621.5
2.50	32209.6	691.1	21721.0	619.4
2.66	31160.0	695.5	21731.8	617.5
2.92	29681.1	700.3	21760.7	614.5
3.10	28807.5	701.7	21773.3	612.5
3.24	28286.6	701.8	21775.9	611.0
3.47	27697.5	700.3	21770.8	608.6
3.63	27430.0	698.3	21761.5	606.9
3.92	27179.7	693.4	21745.3	604.0
4.30	27219.1	685.5	21680.1	600.3
4.56	27181.9	681.3	21619.8	597.8

Table 6.2.1-19 Break Mass and Energy Flow for the Blowdown Phase of the DEHLG Break (Sheet 2 of 3)

Time (sec)	Break Flow (Reactor Vessel Side)		Break Flow (Steam Generator Side)	
	Mass (lbm/sec)	Enthalpy (Btu/lbm)	Mass (lbm/sec)	Enthalpy (Btu/lbm)
5.04	26848.1	677.7	21494.9	592.8
5.30	26829.5	674.5	21451.3	589.8
5.52	26875.5	671.2	21472.8	587.0
6.00	27156.1	663.3	21559.0	578.4
6.12	27259.2	661.0	21380.2	578.1
6.14	27278.0	660.6	17107.2	638.9
6.16	27295.3	660.2	15415.5	648.4
6.26	27384.5	658.3	15139.5	645.0
6.36	27470.4	656.4	15178.8	646.6
6.58	27647.0	652.5	14844.5	641.4
6.80	27770.5	649.2	14651.2	642.6
7.18	27827.1	644.9	14091.2	642.4
7.32	27809.2	643.7	13963.4	637.4
7.76	27650.6	640.8	13217.0	637.1
8.12	27425.5	639.1	12540.9	643.3
8.60	27038.5	637.5	11532.9	640.7
8.86	26799.1	636.8	11052.8	652.6
8.94	26720.7	636.6	10647.4	657.3
9.10	26559.3	636.2	10408.4	657.5
9.54	26086.1	635.4	9684.1	660.2
9.96	25588.7	634.9	9028.0	664.3
10.5	24918.8	634.5	8317.4	670.3
11.1	24007.4	634.8	7593.0	677.9
11.5	23400.0	635.3	7216.0	682.4
12.2	22330.5	636.9	6676.4	689.1
12.8	21308.5	639.3	6264.8	694.6
13.4	20403.9	642.4	5966.0	698.9
13.6	19979.2	644.1	5841.7	700.8
14.2	18872.5	649.6	5555.6	706.0
14.6	18212.9	653.6	5403.4	709.3
15.2	16983.3	662.4	5146.3	715.8
15.9	15439.1	676.8	4850.5	724.6
16.3	14426.8	688.9	4670.5	732.9
16.9	13114.7	708.8	4448.9	743.9
17.2	12684.7	724.7	4363.0	748.1
17.2	11486.5	762.2	4355.4	749.6
17.4	10480.6	799.7	4299.7	752.0

Table 6.2.1-19 Break Mass and Energy Flow for the Blowdown Phase of the DEHLG Break (Sheet 3 of 3)

Time (sec)	Break Flow (Reactor Vessel Side)		Break Flow (Steam Generator Side)	
	Mass (lbm/sec)	Enthalpy (Btu/lbm)	Mass (lbm/sec)	Enthalpy (Btu/lbm)
17.5	9915.9	825.4	4265.7	753.9
17.7	9015.8	868.7	4187.3	758.2
17.9	8318.1	898.5	4103.2	763.1
18.2	7668.8	906.8	3940.8	773.7
18.4	7309.4	919.5	3851.8	781.0
18.8	5942.9	988.2	3438.1	827.9
19.1	5372.6	1025.7	3203.9	863.5
19.4	4629.7	1089.7	2833.9	932.7
19.7	4067.5	1149.5	2492.9	1015.4
20.0	3709.6	1185.1	2193.9	1104.4
20.5	3199.8	1202.6	1805.1	1209.7
20.6	3251.3	1202.9	1793.5	1211.8
21.3	2528.1	1231.1	1534.4	1236.8
21.6	2220.6	1245.8	1439.2	1241.5
22.0	2007.8	1255.1	1333.0	1246.0
22.6	1661.9	1271.0	1221.6	1249.4
22.9	1500.8	1273.6	1133.2	1250.9
23.4	1270.3	1277.7	920.1	1256.5
23.7	1055.6	1280.4	842.5	1258.6
24.1	819.4	1282.1	614.0	1264.3
24.9	599.3	1280.5	296.7	1279.8
25.0	617.1	1282.0	233.2	1285.1
25.5	531.3	1280.9	205.1	1289.5
26.1	420.1	1279.4	0.0	0.0
26.7	152.4	1287.2	0.0	0.0
27.0	0.0	0.0	0.0	0.0

Table 6.2.1-20 Break Mass and Energy Flow for the Reflood Phase of the DEPSG Break (Sheet 1 of 3)

Time (sec)	Break Flow (Reactor Vessel Side)		Break Flow (Steam Generator Side)	
	Mass (lbm/sec)	Enthalpy (Btu/lbm)	Mass (lbm/sec)	Enthalpy (Btu/lbm)
31.6	0.0	0.0	0.0	0.0
32.9	0.0	0.0	0.0	0.0
33.0	0.0	0.0	49.1	1179.3
33.1	0.0	0.0	17.1	1179.3
33.2	0.0	0.0	2.8	1179.3
33.4	0.0	0.0	0.0	0.0
33.5	0.0	0.0	21.6	1179.3
33.6	0.0	0.0	31.5	1179.3
33.7	0.0	0.0	35.3	1179.3
33.8	0.0	0.0	46.0	1179.3
33.9	0.0	0.0	52.2	1179.3
35.7	0.0	0.0	115.4	1179.6
36.7	0.0	0.0	140.3	1179.7
37.7	0.0	0.0	161.5	1179.9
38.7	0.0	0.0	180.2	1180.0
39.7	0.0	0.0	197.1	1180.2
40.7	0.0	0.0	212.4	1180.3
41.8	3737.2	158.2	444.4	1183.5
42.8	4175.0	166.3	495.5	1184.7
43.8	4145.4	167.3	491.6	1184.7
44.8	4094.6	167.9	485.3	1184.5
45.8	4041.6	168.5	478.8	1184.4
46.0	4030.9	168.7	477.5	1184.3
46.8	3988.3	169.2	472.4	1184.2
47.8	3935.2	169.7	466.0	1184.1
48.8	3882.9	170.3	459.8	1184.0
49.8	3831.4	170.9	453.8	1183.8
50.8	3781.0	171.5	447.9	1183.7
51.8	3731.6	172.1	442.2	1183.6
52.8	3683.4	172.6	436.6	1183.4
53.1	3669.1	172.8	435.0	1183.4
53.8	3636.3	173.2	431.3	1183.3
54.8	3590.3	173.7	426.1	1183.2
55.8	3545.5	174.3	421.0	1183.1
56.8	3501.8	174.8	416.1	1183.0
57.8	3459.1	175.4	411.4	1182.9
58.8	3417.4	175.9	406.8	1182.7
59.8	3376.7	176.5	402.3	1182.6

Table 6.2.1-20 Break Mass and Energy Flow for the Reflood Phase of the DEPSG Break (Sheet 2 of 3)

Time (sec)	Break Flow (Reactor Vessel Side)		Break Flow (Steam Generator Side)	
	Mass (lbm/sec)	Enthalpy (Btu/lbm)	Mass (lbm/sec)	Enthalpy (Btu/lbm)
60.8	3337.0	177.0	398.0	1182.5
61.2	3321.4	177.2	396.2	1182.5
61.8	3298.2	177.5	393.7	1182.4
62.8	3260.4	178.1	389.6	1182.3
63.8	3223.3	178.6	385.7	1182.2
64.8	3187.2	179.1	381.8	1182.2
65.8	3151.8	179.6	378.0	1182.1
66.8	3117.2	180.2	374.4	1182.0
67.8	3083.3	180.7	370.8	1181.9
68.8	3050.2	181.2	367.3	1181.8
69.8	3017.7	181.7	363.9	1181.7
70.2	3004.9	181.9	362.6	1181.7
70.8	2985.9	182.2	360.6	1181.6
71.8	2954.8	182.8	357.4	1181.6
72.8	2924.3	183.3	354.3	1181.5
73.8	2894.3	183.8	351.2	1181.4
74.8	2865.0	184.3	348.2	1181.3
75.8	2836.2	184.8	345.3	1181.3
76.8	2808.0	185.3	342.4	1181.2
77.8	2780.2	185.8	339.6	1181.1
78.8	2753.0	186.3	336.9	1181.1
79.8	2726.3	186.8	334.2	1181.0
80.8	2700.0	187.4	331.6	1180.9
81.8	2674.2	187.9	329.0	1180.9
82.8	2648.8	188.4	326.5	1180.8
83.8	2623.9	188.9	324.1	1180.8
84.8	182.6	1140.4	410.6	1182.1
85.8	191.9	1039.8	404.4	1182.2
87.8	190.7	1042.8	403.0	1182.2
91.8	188.4	1049.3	400.2	1182.1
92.8	187.8	1051.0	399.5	1182.1
100.8	183.4	1064.4	394.2	1182.0
108.8	179.3	1076.7	389.2	1181.9
116.8	175.5	1087.6	384.2	1181.8
120.8	173.7	1092.5	381.6	1181.7
122.8	257.2	934.6	481.6	1183.7
124.8	256.2	936.2	480.5	1183.7
128.8	254.4	938.6	478.4	1183.7

Table 6.2.1-20 Break Mass and Energy Flow for the Reflood Phase of the DEPSG Break (Sheet 3 of 3)

Time (sec)	Break Flow (Reactor Vessel Side)		Break Flow (Steam Generator Side)	
	Mass (lbm/sec)	Enthalpy (Btu/lbm)	Mass (lbm/sec)	Enthalpy (BtuU/lbm)
132.8	252.7	940.1	476.0	1183.7
136.8	251.3	940.6	473.6	1183.6
140.8	249.9	940.2	471.1	1183.6
148.8	247.7	937.4	465.9	1183.5
150.8	247.2	936.3	464.6	1183.5
154.8	246.4	933.7	461.8	1183.5
162.8	244.8	927.5	456.2	1183.4
170.8	243.3	920.5	450.5	1183.4
174.8	242.7	916.9	447.6	1183.4
190.8	239.9	902.8	436.2	1183.3
198.8	238.3	896.6	430.6	1183.2
206.8	236.7	890.9	425.0	1183.2
214.8	234.8	886.2	419.4	1183.2
222.8	232.8	882.5	413.9	1183.1
230.8	230.5	880.0	408.4	1183.1
238.8	227.9	878.8	402.9	1183.1
246.8	225.2	878.3	397.4	1183.0
254.8	223.8	872.3	392.4	1183.0
262.8	222.1	867.5	387.4	1183.0
265.5	221.5	866.2	385.7	1182.9
265.6	92.6	114.1	119.9	1179.4

Table 6.2.1-21 Break Mass and Energy Flow for the Long-term Cooling Phase of the DEPSG Break (Sheet 1 of 6)

Time (sec)	Break Flow (Reactor Vessel Side)		Break Flow (Steam Generator Side)	
	Mass (lbm/sec)	Enthalpy (Btu/lbm)	Mass (lbm/sec)	Enthalpy (Btu/lbm)
266.0	453.7	663.8	542.7	1207.8
270.0	2012.4	333.0	4548.9	321.9
274.0	721.1	733.2	3042.4	347.9
278.0	460.8	935.5	2599.8	416.8
282.0	658.4	649.4	1056.3	775.8
286.0	303.0	1019.0	1014.9	649.0
290.0	305.0	844.4	840.9	591.8
294.0	357.9	666.6	543.7	705.7
298.1	414.3	564.2	258.3	1173.8
302.1	428.5	520.7	210.6	1174.2
306.1	424.4	496.6	175.1	1179.2
310.1	417.2	476.5	223.9	857.1
314.1	418.1	495.2	179.4	967.0
318.1	418.5	512.4	225.3	853.9
322.1	418.6	514.0	248.3	779.9
326.1	419.3	511.5	228.0	799.6
330.1	418.8	509.4	215.1	803.5
334.1	415.5	510.0	202.9	808.4
338.1	411.7	510.7	179.7	843.8
342.1	408.5	511.5	156.1	892.2
346.1	405.4	512.2	136.6	937.2
350.1	402.6	513.3	118.1	987.4
354.1	399.7	514.7	101.9	1041.7
358.1	397.4	516.9	88.7	1075.9
362.1	394.9	519.9	78.8	1117.7
366.1	392.5	522.6	68.2	1155.3
370.1	390.2	525.5	59.9	1184.1
374.1	388.2	528.6	53.5	1190.3
378.1	385.5	531.4	49.2	1189.8
382.1	381.7	532.9	45.4	1189.8
386.1	371.1	531.3	41.9	1189.8
390.1	416.0	577.5	142.3	985.9
394.1	355.2	592.8	252.8	671.2
398.1	356.1	558.1	35.3	1187.9
402.1	399.2	532.9	60.1	1188.5
406.1	355.0	619.2	400.9	545.4
410.2	316.0	580.3	9.1	1157.6

Table 6.2.1-21 Break Mass and Energy Flow for the Long-term Cooling Phase of the DEPSG Break (Sheet 2 of 6)

Time (sec)	Break Flow (Reactor Vessel Side)		Break Flow (Steam Generator Side)	
	Mass (lbm/sec)	Enthalpy (Btu/lbm)	Mass (lbm/sec)	Enthalpy (Btu/lbm)
414.2	320.0	537.6	33.7	1187.6
418.2	414.1	591.8	113.9	1186.0
422.2	366.8	635.0	177.5	743.4
426.2	300.8	591.7	32.7	1175.5
430.2	324.9	536.2	24.6	1186.6
434.2	388.0	627.8	154.3	919.2
438.2	313.5	639.7	19.9	1172.0
442.2	356.8	595.1	33.3	1186.3
446.2	282.7	687.6	17.3	809.3
450.3	317.7	649.0	21.2	1185.5
454.3	273.9	709.0	10.8	930.9
458.3	338.0	685.2	77.8	1173.5
462.3	255.9	728.0	20.6	1143.1
466.3	255.8	731.9	10.0	1166.5
470.3	310.8	715.3	83.6	1095.6
474.4	333.2	716.7	59.6	1185.3
478.4	292.7	730.3	18.2	1184.6
482.4	275.9	760.8	53.0	1181.5
486.4	229.9	782.4	23.2	1104.2
490.4	305.0	775.5	70.3	1155.6
494.4	284.7	833.8	86.4	1026.3
498.4	243.6	774.8	14.2	1155.6
520.4	267.9	889.0	29.2	754.8
560.5	162.4	1028.7	234.8	393.5
600.5	229.7	1020.2	105.4	935.5
640.5	189.5	1031.6	21.3	449.8
680.5	189.8	1138.1	69.4	1076.7
720.5	164.9	1250.0	1664.7	288.1
760.5	184.6	1229.0	137.2	710.8
800.6	190.7	999.5	64.5	527.4
840.6	190.1	1073.2	60.8	1162.3
880.6	192.0	1064.3	95.6	848.0
920.6	219.3	959.3	37.7	1168.4
960.7	194.5	1145.2	1853.8	284.4
1000.7	199.1	1051.5	31.2	1180.8
1040.7	157.9	1055.4	91.9	270.3
1080.7	208.2	962.2	0.0	0.0

Table 6.2.1-21 Break Mass and Energy Flow for the Long-term Cooling Phase of the DEPSG Break (Sheet 3 of 6)

Time (sec)	Break Flow (Reactor Vessel Side)		Break Flow (Steam Generator Side)	
	Mass (lbm/sec)	Enthalpy (Btu/lbm)	Mass (lbm/sec)	Enthalpy (Btu/lbm)
1120.7	184.4	1159.8	39.5	1179.4
1160.8	176.6	982.8	29.0	270.7
1200.8	236.0	1026.2	60.0	1038.2
1240.8	167.9	1075.9	290.0	337.9
1280.8	163.2	1029.3	125.9	271.6
1320.8	211.6	885.2	194.1	271.7
1360.8	193.7	889.7	69.7	305.1
1400.8	287.3	903.6	32.6	1180.6
1440.9	256.3	849.6	51.2	1180.5
1480.9	220.7	913.5	42.6	1146.0
1520.9	330.1	829.3	668.8	307.8
1560.9	295.8	799.8	387.0	368.2
1600.9	217.7	968.5	66.0	294.1
1641.0	215.4	913.6	27.9	1180.5
1681.0	258.7	865.0	52.0	1180.3
1721.0	232.5	837.3	12.7	1180.8
1761.0	219.7	890.0	25.4	1168.6
1801.0	215.3	921.5	0.2	269.9
1841.1	517.6	418.6	53.8	897.6
1881.1	212.3	823.0	56.1	1172.1
1921.1	178.0	907.3	8.5	1173.6
1961.1	151.5	974.9	34.9	1175.6
2001.1	943.9	275.0	93.3	1120.4
2041.2	125.8	1061.7	39.5	1175.4
2081.2	219.6	507.0	19.7	1181.2
2121.2	236.4	385.9	2.0	1179.1
2161.2	135.6	737.2	82.1	1141.7
2201.2	222.1	593.2	28.2	1181.2
2241.2	128.5	737.2	0.0	0.0
2281.3	403.6	345.1	24.2	1173.4
2321.3	387.3	359.3	27.2	1174.4
2361.3	188.5	588.3	10.6	1180.9
2401.3	162.8	596.0	1.8	1159.7
2441.3	143.6	584.1	2.9	1179.3
2481.3	133.8	685.6	25.7	1180.9
2521.4	127.5	708.1	78.1	1133.8
2561.4	234.3	436.5	22.5	1180.8

Table 6.2.1-21 Break Mass and Energy Flow for the Long-term Cooling Phase of the DEPSG Break (Sheet 4 of 6)

Time (sec)	Break Flow (Reactor Vessel Side)		Break Flow (Steam Generator Side)	
	Mass (lbm/sec)	Enthalpy (Btu/lbm)	Mass (lbm/sec)	Enthalpy (Btu/lbm)
2601.4	122.7	876.1	19.3	1180.9
2641.4	329.9	376.5	26.3	1180.8
2681.4	204.7	550.3	14.1	1180.7
2721.4	201.5	552.5	14.3	1180.6
2761.4	204.5	541.2	14.8	1180.6
2801.4	201.5	541.8	14.9	1180.5
2841.4	205.6	527.7	15.0	1180.5
2881.4	203.5	528.3	14.6	1180.4
2921.5	197.6	536.8	13.7	1180.4
2961.5	304.1	373.6	24.7	1180.4
3001.6	368.9	339.3	28.2	1180.5
3201.6	152.9	648.0	22.4	1176.9
3401.9	463.1	272.3	3.5	1179.3
3602.0	294.1	408.0	34.4	1179.5
3802.1	276.8	408.2	11.6	1179.2
4002.2	208.4	441.0	20.5	1178.7
4202.4	193.7	438.0	0.0	0.0
4402.5	386.4	356.3	29.9	1178.4
4602.8	322.9	348.5	28.5	1178.3
4803.0	454.7	323.9	42.4	1177.9
5003.1	179.1	501.9	10.7	1177.5
5203.3	190.1	476.7	15.7	1177.5
5403.4	191.5	467.8	14.0	1176.4
5603.5	237.8	390.3	23.9	1175.6
5803.6	297.6	284.3	47.2	1107.3
6003.8	171.1	370.4	25.1	1176.0
6203.9	274.9	306.2	12.8	1174.6
6404.1	366.0	290.0	13.1	1176.1
6604.2	266.3	313.7	103.4	1048.9
6804.4	183.9	496.2	8.7	1176.0
7004.5	220.9	438.3	21.9	1175.9
7204.6	73.2	785.9	19.6	1175.8
7404.8	275.1	369.5	26.4	965.2
7605.0	182.9	479.9	7.7	1166.9
7805.2	211.2	370.4	0.0	0.0
8005.3	149.1	522.2	15.4	1175.2
8205.5	156.0	470.6	7.1	1174.9

Table 6.2.1-21 Break Mass and Energy Flow for the Long-term Cooling Phase of the DEPSG Break (Sheet 5 of 6)

Time (sec)	Break Flow (Reactor Vessel Side)		Break Flow (Steam Generator Side)	
	Mass (lbm/sec)	Enthalpy (Btu/lbm)	Mass (lbm/sec)	Enthalpy (Btu/lbm)
8405.7	156.3	361.4	20.3	1174.9
8605.8	331.2	304.2	9.7	1174.0
8806.0	230.1	389.3	12.1	1110.4
9006.1	647.5	258.8	72.8	1173.9
9206.3	304.5	361.4	30.9	1173.8
9406.5	121.4	507.9	8.4	1165.8
9606.7	112.3	372.9	13.4	1173.9
9806.7	440.2	315.9	27.5	1173.9
10006.9	267.1	308.4	20.2	1165.8
12007.1	378.1	308.9	22.3	1172.6
14007.2	188.4	392.9	14.7	1105.2
16007.3	179.1	339.2	9.0	1159.5
18007.5	530.7	259.7	17.9	1170.1
20007.7	394.4	277.2	27.3	1164.9
22007.8	398.4	250.6	11.2	1168.0
24008.0	301.4	271.9	11.9	1068.0
26008.2	310.7	304.5	24.0	1165.8
28008.4	304.2	289.6	28.3	1139.7
30008.4	272.1	247.6	1.5	317.2
32008.6	200.9	301.6	14.2	1029.4
34008.7	40.7	580.2	0.1	218.1
36008.9	1096.6	210.1	5.6	1164.5
38009.1	76.0	581.2	8.6	1130.2
40009.3	434.7	207.5	11.3	1152.9
42009.4	128.3	366.3	4.1	1129.4
44009.6	933.0	210.4	1.7	1163.5
46009.7	0.0	0.0	26.5	894.8
48009.8	509.0	210.5	18.3	1105.4
50010.0	62.7	544.9	3.9	1162.5
52010.2	1164.9	202.6	6.9	1162.2
54010.3	394.7	206.1	24.4	1160.1
56010.5	181.1	319.0	10.1	1161.3
58010.6	259.6	205.5	12.3	1114.4
60010.9	78.5	368.4	1.8	1143.2
62011.0	297.4	204.5	7.9	1151.7
64011.2	0.0	0.0	76.2	906.3
66011.4	433.7	194.3	1.2	1160.9

Table 6.2.1-21 Break Mass and Energy Flow for the Long-term Cooling Phase of the DEPSG Break (Sheet 6 of 6)

Time (sec)	Break Flow (Reactor Vessel Side)		Break Flow (Steam Generator Side)	
	Mass (lbm/sec)	Enthalpy (Btu/lbm)	Mass (lbm/sec)	Enthalpy (Btu/lbm)
68011.4	404.2	204.3	5.5	1160.9
70011.6	608.6	183.8	1.5	1160.5
72011.8	190.9	206.1	2.5	1140.8
74011.9	101.0	295.1	0.1	1140.3
76012.0	1078.9	188.1	4.8	1160.1
78012.1	475.9	185.4	1.2	1159.8
80012.2	0.0	0.0	91.0	881.2
82012.3	517.3	189.6	21.6	1159.6
84012.5	470.0	185.8	6.0	1158.6
86012.6	168.4	183.8	3.8	1159.7
88012.8	197.0	225.8	4.1	1158.5
90013.1	83.7	332.5	3.0	1156.5
92013.3	545.3	192.9	9.8	1093.7
94013.4	94.1	386.1	6.2	1158.6
96013.6	157.3	229.6	0.1	200.9
98013.8	114.7	178.1	27.6	1145.6
100000.0	410.8	182.6	3.0	949.8

Table 6.2.1-22 Elevations, Flow Areas, and Hydraulic Diameters used in Containment Mass and Energy Release Analyses

Component	Bottom Elevation[a] (ft)	Flow Area (ft^2)	Hydraulic Diameter (ft)
Hot Leg	28.1	5.2	2.6
Pump Suction Leg	17.7	5.2	2.6
Cold Leg	28.1	5.2	2.6
Reactor Coolant Pump	24.3	5.2	2.6
Pressurizer Surge Line	30.7	0.9	1.1
Steam Generator			
- Plenum	32.3	5.2	2.6
- Tubes	37.2	16.2	0.055
Reactor Vessel			
- Inlet Nozzle	28.1	5.2	2.6
- Downcomer	9.8	43.6	1.7
- Lower Plenum	0.0	68.0[b]	0.037[b]
- Core	9.8	68.0[b]	0.037[b]
- Upper Plenum	23.8	68.0[b]	0.037[b]
- Neutron Reflector	9.8	5.3	0.066
- Outlet Nozzle	28.1	5.2	2.6

Notes:
(a) Based on reactor vessel bottom elevation
(b) Represented by core component parameters

Table 6.2.1-23 Safety Injection Flow Rate for the DEPSG Break

Time (sec)	Flow Rate (lbm/sec)
0.0	0.0
120.8	0.0
122.8	344.1
150.8	344.0
200.8	343.9
250.8	343.9
265.5	343.9
266.0	336.0
300.1	335.5
400.1	334.8
500.4	334.4
1000.7	332.5
1500.9	330.9
2001.1	329.3
5003.1	324.1
10006.9	322.7
50010.0	330.1
100000.0	333.3

Table 6.2.1-24 Stored Energy Source for Mass and Energy Release for LOCA

Energy Source	Energy (Million Btu)
Reactor Coolant Internal Energy	441.38
Accumulator Internal Energy	47.09
Energy Stored in Core	43.40
Energy Stored in RCS Structure	267.87
Steam Generator Coolant Internal Energy	349.58
Energy Stored in Steam Generator Metal	138.16
RCS Total Contents	1287.49

Table 6.2.1-25 Description for Evaluations of Various Pipe Sizes and Break Locations for the Secondary Steam System Piping Failures (Includes Plant Power Levels)

Case No.	Break Type	Break Area*2	Initial Power	Failures in M&E Release Analysis			Offsite Power
				Main Feedwater Isolation Valve	Main Steam Check valve	One Safety Injection pump	
1	DEGB	1.4 ft^2	102 %	***v***	***v***	***v***	with
2			75 %	***v***	***v***	***v***	with
3			50 %	***v***	***v***	***v***	with
4			25 %	***v***	***v***	***v***	with
5			0 %	***v***	***v***	***v***	with
6	Split*1	1.65 ft^2	102 %	***v***	***v***	***v***	with
7		1.71 ft^2	0 %	***v***	***v***	***v***	with
8	DEGB	1.4 ft^2	102 %	***v***	***v***	***v***	without
9			0 %	***v***	***v***	***v***	without

Notes:

*1 Largest area that will not result in immediate main steam line isolation signal from low main steam line pressure. ECCS signal for split breaks occurs on high containment pressure, and steam isolation signal on high-high containment pressure.

*2 For Double-Ended Guillotine Break (DEGB), area is per loop prior to main steam line isolation and for faulted loop only after main steam line isolation.
For split break, area is shared by all loops prior to main steam line isolation. After main steam line isolation, A = 1.4 ft^2 for faulted loop.

Table 6.2.1-26 Mass and Energy Release Data for the Secondary Steam System Piping Failure Case 5 - Highest Containment Pressure

(Sheet 1 of 5)

Time (sec)	Break Flow (upstream of the break)		Break Flow (downstream of the break)	
	Mass (lbm/sec)	Enthalpy (Btu/lbm)	Mass (lbm/sec)	Enthalpy (Btu/lbm)
0.0	0.0	0.0	0.0	0.0
0.1	3191.9	1189.2	21170.2	1184.7
0.2	3173.7	1189.5	21109.5	1184.9
0.3	3155.7	1189.7	21049.8	1185.0
0.4	3138.0	1189.9	20991.0	1185.1
0.5	3120.6	1190.2	20933.2	1185.2
0.6	3103.4	1190.4	20876.3	1185.3
0.7	3086.4	1190.6	20820.4	1185.3
0.8	3069.8	1190.8	20765.4	1185.4
0.9	3053.3	1191.0	20711.2	1185.5
1.0	3037.1	1191.2	20658.0	1185.6
1.2	3005.4	1191.6	20553.9	1185.8
1.4	2974.6	1192.0	20453.0	1185.9
1.6	2944.6	1192.4	20355.1	1186.1
1.8	2915.4	1192.7	20260.0	1186.2
2.0	2887.0	1193.1	20167.6	1186.3
2.2	2859.3	1193.4	20077.7	1186.4
2.4	2832.4	1193.7	19990.3	1186.5
2.6	2806.2	1194.0	19905.2	1186.6
2.8	2780.6	1194.3	19822.3	1186.7
3.0	2755.7	1194.6	19741.5	1186.8
3.2	2731.4	1194.9	19662.7	1186.9
3.4	2707.8	1195.2	19586.0	1187.0
3.6	2684.7	1195.4	19511.1	1187.1

Time (sec)	Break Flow (upstream of the break)		Break Flow (downstream of the break)	
	Mass (lbm/sec)	Enthalpy (Btu/lbm)	Mass (lbm/sec)	Enthalpy (Btu/lbm)
3.8	2662.2	1195.7	19438.0	1187.2
4.0	2640.3	1195.9	19366.8	1187.2
4.2	2618.9	1196.2	7697.2	1196.7
4.4	2598.1	1196.4	7629.3	1197.0
4.6	2577.8	1196.6	7562.9	1197.2
4.8	2558.0	1196.8	7498.2	1197.4
5.0	2538.7	1197.0	7435.0	1197.7
5.2	2519.8	1197.2	7373.2	1197.9
5.4	2501.5	1197.4	7312.8	1198.1
5.6	2483.6	1197.6	7253.9	1198.3
5.8	2466.1	1197.8	7196.2	1198.5
6.0	2449.0	1198.0	7139.9	1198.6
6.2	2432.4	1198.1	7084.8	1198.8
6.4	2416.1	1198.3	7031.0	1199.0
6.6	2400.3	1198.4	6978.4	1199.2
6.8	2384.8	1198.6	6926.9	1199.3
7.0	2369.7	1198.7	6876.5	1199.5
7.2	2354.9	1198.9	6827.3	1199.6
7.4	2340.4	1199.0	6779.1	1199.8
7.6	2326.3	1199.2	6731.9	1199.9
7.8	2312.5	1199.3	6685.8	1200.0
8.0	2299.0	1199.4	6640.6	1200.2
8.2	2285.8	1199.5	6596.3	1200.3
8.4	2272.9	1199.7	6553.0	1200.4

Table 6.2.1-26 Mass and Energy Release Data for the Secondary Steam System Piping Failure Case 5 - Highest Containment Pressure

(Sheet 2 of 5)

Time (sec)	Break Flow (upstream of the break)		Break Flow (downstream of the break)	
	Mass (lbm/sec)	Enthalpy (Btu/lbm)	Mass (lbm/sec)	Enthalpy (Btu/lbm)
8.6	2260.2	1199.8	6510.5	1200.6
8.8	2247.8	1199.9	6468.9	1200.7
9.0	2235.6	1200.0	6428.1	1200.8
9.2	2223.7	1200.1	6388.1	1200.9
9.4	2212.1	1200.2	6348.8	1201.0
9.6	2200.6	1200.3	6310.3	1201.1
9.8	2189.4	1200.4	6272.6	1201.2
10.0	2178.3	1200.5	6235.5	1201.3
10.2	2168.8	1200.6	0.0	0.0
10.4	2159.4	1200.6	0.0	0.0
10.6	2150.2	1200.7	0.0	0.0
10.8	2141.1	1200.8	0.0	0.0
11.0	2132.1	1200.9	0.0	0.0
11.5	2109.9	1201.1	0.0	0.0
12.0	2088.3	1201.2	0.0	0.0
12.5	2067.2	1201.4	0.0	0.0
13.0	2046.4	1201.6	0.0	0.0
13.5	2025.9	1201.7	0.0	0.0
14.0	2005.7	1201.9	0.0	0.0
14.5	1985.7	1202.0	0.0	0.0
15.0	1965.9	1202.1	0.0	0.0
15.5	1946.3	1202.3	0.0	0.0
16.0	1926.7	1202.4	0.0	0.0
16.5	1907.3	1202.5	0.0	0.0

Time (sec)	Break Flow (upstream of the break)		Break Flow (downstream of the break)	
	Mass (lbm/sec)	Enthalpy (Btu/lbm)	Mass (lbm/sec)	Enthalpy (Btu/lbm)
17.0	1888.0	1202.7	0.0	0.0
17.5	1868.8	1202.8	0.0	0.0
18.0	1849.7	1202.9	0.0	0.0
18.5	1830.8	1203.0	0.0	0.0
19.0	1812.3	1203.1	0.0	0.0
19.5	1794.3	1203.2	0.0	0.0
20.0	1776.8	1203.3	0.0	0.0
20.5	1759.8	1203.4	0.0	0.0
21.0	1743.3	1203.5	0.0	0.0
21.5	1727.2	1203.6	0.0	0.0
22.0	1711.6	1203.7	0.0	0.0
22.5	1696.3	1203.8	0.0	0.0
23.0	1680.9	1203.8	0.0	0.0
23.5	1666.2	1203.9	0.0	0.0
24.0	1651.6	1204.0	0.0	0.0
24.5	1637.3	1204.0	0.0	0.0
25.0	1623.2	1204.1	0.0	0.0
25.5	1609.3	1204.1	0.0	0.0
26.0	1595.6	1204.2	0.0	0.0
26.5	1582.0	1204.2	0.0	0.0
27.0	1568.7	1204.3	0.0	0.0
27.5	1555.5	1204.3	0.0	0.0
28.0	1542.6	1204.4	0.0	0.0
28.5	1529.9	1204.4	0.0	0.0

Table 6.2.1-26 Mass and Energy Release Data for the Secondary Steam System Piping Failure Case 5 - Highest Containment Pressure

(Sheet 3 of 5)

Time (sec)	Break Flow (upstream of the break)		Break Flow (downstream of the break)	
	Mass (lbm/sec)	Enthalpy (Btu/lbm)	Mass (lbm/sec)	Enthalpy (Btu/lbm)
29.0	1517.4	1204.5	0.0	0.0
29.5	1505.1	1204.5	0.0	0.0
30.0	1493.1	1204.5	0.0	0.0
30.5	1481.3	1204.5	0.0	0.0
31.0	1469.7	1204.6	0.0	0.0
31.5	1458.3	1204.6	0.0	0.0
32.0	1447.1	1204.6	0.0	0.0
32.5	1436.2	1204.7	0.0	0.0
33.0	1425.5	1204.7	0.0	0.0
33.5	1415.0	1204.7	0.0	0.0
34.0	1404.7	1204.7	0.0	0.0
34.5	1394.6	1204.7	0.0	0.0
35.0	1384.8	1204.7	0.0	0.0
35.5	1375.1	1204.7	0.0	0.0
36.0	1365.6	1204.8	0.0	0.0
36.5	1356.3	1204.8	0.0	0.0
37.0	1347.2	1204.8	0.0	0.0
37.5	1338.2	1204.8	0.0	0.0
38.0	1329.5	1204.8	0.0	0.0
38.5	1320.9	1204.8	0.0	0.0
39.0	1312.4	1204.8	0.0	0.0
39.5	1304.1	1204.8	0.0	0.0
40.0	1296.0	1204.8	0.0	0.0
40.5	1288.4	1204.8	0.0	0.0

Time (sec)	Break Flow (upstream of the break)		Break Flow (downstream of the break)	
	Mass (lbm/sec)	Enthalpy (Btu/lbm)	Mass (lbm/sec)	Enthalpy (Btu/lbm)
41.0	1281.1	1204.8	0.0	0.0
41.5	1273.9	1204.8	0.0	0.0
42.0	1266.8	1204.8	0.0	0.0
42.5	1259.8	1204.8	0.0	0.0
43.0	1252.9	1204.8	0.0	0.0
43.5	1246.1	1204.8	0.0	0.0
44.0	1239.4	1204.8	0.0	0.0
44.5	1232.9	1204.8	0.0	0.0
45.0	1226.4	1204.8	0.0	0.0
45.5	1220.0	1204.7	0.0	0.0
46.0	1213.8	1204.7	0.0	0.0
46.5	1207.6	1204.7	0.0	0.0
47.0	1201.5	1204.7	0.0	0.0
47.5	1195.5	1204.7	0.0	0.0
48.0	1189.6	1204.7	0.0	0.0
48.5	1183.7	1204.7	0.0	0.0
49.0	1178.0	1204.7	0.0	0.0
49.5	1172.3	1204.7	0.0	0.0
50.0	1166.7	1204.6	0.0	0.0
55.0	1114.9	1204.5	0.0	0.0
60.0	1068.6	1204.3	0.0	0.0
65.0	1024.5	1204.1	0.0	0.0
70.0	987.5	1203.9	0.0	0.0
75.0	956.9	1203.7	0.0	0.0

Table 6.2.1-26 Mass and Energy Release Data for the Secondary Steam System Piping Failure Case 5 - Highest Containment Pressure

(Sheet 4 of 5)

Time (sec)	Break Flow (upstream of the break)		Break Flow (downstream of the break)	
	Mass (lbm/sec)	Enthalpy (Btu/lbm)	Mass (lbm/sec)	Enthalpy (Btu/lbm)
80.0	931.4	1203.5	0.0	0.0
85.0	909.9	1203.3	0.0	0.0
90.0	891.5	1203.2	0.0	0.0
95.0	875.9	1203.1	0.0	0.0
100.0	862.4	1202.9	0.0	0.0
105.0	850.6	1202.8	0.0	0.0
110.0	840.1	1202.7	0.0	0.0
115.0	830.8	1202.6	0.0	0.0
120.0	822.2	1202.5	0.0	0.0
125.0	814.4	1202.4	0.0	0.0
130.0	807.1	1202.3	0.0	0.0
135.0	800.2	1202.2	0.0	0.0
140.0	793.6	1202.2	0.0	0.0
145.0	787.3	1202.1	0.0	0.0
150.0	781.2	1202.0	0.0	0.0
155.0	775.3	1201.9	0.0	0.0
160.0	769.5	1201.8	0.0	0.0
165.0	763.7	1201.8	0.0	0.0
170.0	758.1	1201.7	0.0	0.0
175.0	752.5	1201.6	0.0	0.0
180.0	747.0	1201.5	0.0	0.0
185.0	741.5	1201.4	0.0	0.0
190.0	736.1	1201.4	0.0	0.0
195.0	730.6	1201.3	0.0	0.0

Time (sec)	Break Flow (upstream of the break)		Break Flow (downstream of the break)	
	Mass (lbm/sec)	Enthalpy (Btu/lbm)	Mass (lbm/sec)	Enthalpy (Btu/lbm)
200.0	725.2	1201.2	0.0	0.0
205.0	719.9	1201.1	0.0	0.0
210.0	714.5	1201.0	0.0	0.0
215.0	709.1	1201.0	0.0	0.0
220.0	703.8	1200.9	0.0	0.0
225.0	698.5	1200.8	0.0	0.0
230.0	693.2	1200.7	0.0	0.0
235.0	687.9	1200.6	0.0	0.0
240.0	682.6	1200.5	0.0	0.0
245.0	677.3	1200.4	0.0	0.0
250.0	672.1	1200.3	0.0	0.0
255.0	666.8	1200.2	0.0	0.0
260.0	661.6	1200.1	0.0	0.0
265.0	656.4	1200.0	0.0	0.0
270.0	651.2	1199.9	0.0	0.0
275.0	646.0	1199.8	0.0	0.0
280.0	640.9	1199.7	0.0	0.0
285.0	635.7	1199.6	0.0	0.0
290.0	630.6	1199.5	0.0	0.0
295.0	625.5	1199.4	0.0	0.0
300.0	620.4	1199.3	0.0	0.0
305.0	615.3	1199.2	0.0	0.0
310.0	610.3	1199.1	0.0	0.0
315.0	605.2	1199.0	0.0	0.0

Table 6.2.1-26 Mass and Energy Release Data for the Secondary Steam System Piping Failure Case 5 - Highest Containment Pressure

(Sheet 5 of 5)

Time (sec)	Break Flow (upstream of the break)		Break Flow (downstream of the break)	
	Mass (lbm/sec)	Enthalpy (Btu/lbm)	Mass (lbm/sec)	Enthalpy (Btu/lbm)
320.0	600.2	1198.9	0.0	0.0
325.0	595.3	1198.8	0.0	0.0
330.0	590.3	1198.7	0.0	0.0
335.0	585.4	1198.5	0.0	0.0
340.0	580.5	1198.4	0.0	0.0
345.0	575.6	1198.3	0.0	0.0
350.0	570.7	1198.2	0.0	0.0
355.0	565.9	1198.1	0.0	0.0
360.0	561.1	1198.0	0.0	0.0
365.0	556.3	1197.8	0.0	0.0
370.0	551.6	1197.7	0.0	0.0
375.0	546.9	1197.6	0.0	0.0
380.0	542.2	1197.5	0.0	0.0
385.0	537.6	1197.3	0.0	0.0
390.0	533.0	1197.2	0.0	0.0
395.0	528.4	1197.1	0.0	0.0
400.0	468.9	1195.3	0.0	0.0
405.0	292.0	1187.1	0.0	0.0
410.0	163.3	1175.9	0.0	0.0
415.0	0.0	0.0	0.0	0.0
420.0	0.0	0.0	0.0	0.0
460.0	0.0	0.0	0.0	0.0
500.0	0.0	0.0	0.0	0.0

Table 6.2.1-27 Mass and Energy Release Data for the Secondary Steam System Piping Failure Case 1 - Highest Containment Temperature

(Sheet 1 of 4)

Time (sec)	Break Flow (upstream of the break)		Break Flow (downstream of the break)	
	Mass (lbm/sec)	Enthalpy (Btu/lbm)	Mass (lbm/sec)	Enthalpy (Btu/lbm)
0.0	0.0	0.0	0.0	0.0
0.1	2736.0	1194.9	17704.9	1197.6
0.2	2727.0	1195.0	17674.9	1197.7
0.3	2718.2	1195.1	17645.4	1197.7
0.4	2709.6	1195.2	17616.5	1197.8
0.5	2701.1	1195.3	17588.1	1197.8
0.6	2692.8	1195.4	17560.3	1197.9
0.7	2684.5	1195.4	17533.0	1197.9
0.8	2676.5	1195.5	17506.2	1198.0
0.9	2668.5	1195.6	17479.9	1198.0
1.0	2660.7	1195.7	17454.0	1198.1
1.2	2645.4	1195.9	17403.5	1198.2
1.4	2630.6	1196.0	17354.8	1198.3
1.6	2616.2	1196.2	17307.6	1198.4
1.8	2602.2	1196.3	17261.8	1198.4
2.0	2588.6	1196.5	17217.5	1198.5
2.2	2575.4	1196.6	17174.4	1198.6
2.4	2562.6	1196.8	17132.6	1198.7
2.6	2550.1	1196.9	17092.0	1198.7
2.8	2537.9	1197.0	17052.5	1198.8
3.0	2526.0	1197.2	17014.1	1198.8
3.2	2514.5	1197.3	16976.8	1198.9
3.4	2503.2	1197.4	16940.4	1199.0
3.6	2492.3	1197.5	16905.0	1199.0

Time (sec)	Break Flow (upstream of the break)		Break Flow (downstream of the break)	
	Mass (lbm/sec)	Enthalpy (Btu/lbm)	Mass (lbm/sec)	Enthalpy (Btu/lbm)
3.8	2481.6	1197.6	16870.5	1199.1
4.0	2471.2	1197.7	16836.9	1199.1
4.2	2461.1	1197.8	7304.1	1198.1
4.4	2451.2	1197.9	7272.2	1198.2
4.6	2441.5	1198.0	7241.2	1198.3
4.8	2432.1	1198.1	7210.9	1198.4
5.0	2423.0	1198.2	7181.3	1198.5
5.2	2414.0	1198.3	7152.5	1198.6
5.4	2405.3	1198.4	7124.5	1198.7
5.6	2396.8	1198.5	7097.1	1198.8
5.8	2388.5	1198.6	7070.4	1198.9
6.0	2380.4	1198.6	7044.3	1199.0
6.2	2372.5	1198.7	7018.9	1199.0
6.4	2364.8	1198.8	6994.2	1199.1
6.6	2357.3	1198.9	6970.0	1199.2
6.8	2349.9	1198.9	6946.4	1199.3
7.0	2342.7	1199.0	6923.4	1199.3
7.2	2335.7	1199.1	6901.0	1199.4
7.4	2328.9	1199.1	6879.1	1199.5
7.6	2322.2	1199.2	6857.7	1199.5
7.8	2315.6	1199.3	6836.9	1199.6
8.0	2309.2	1199.3	6816.5	1199.7
8.2	2303.0	1199.4	6796.7	1199.7
8.4	2296.9	1199.4	6777.2	1199.8

Table 6.2.1-27 Mass and Energy Release Data for the Secondary Steam System Piping Failure Case 1 - Highest Containment Temperature

(Sheet 2 of 4)

Time (sec)	Break Flow (upstream of the break)		Break Flow (downstream of the break)	
	Mass (lbm/sec)	Enthalpy (Btu/lbm)	Mass (lbm/sec)	Enthalpy (Btu/lbm)
8.6	2290.9	1199.5	6758.3	1199.8
8.8	2285.0	1199.5	6739.7	1199.9
9.0	2279.3	1199.6	6721.5	1199.9
9.2	2273.6	1199.6	6703.7	1200.0
9.4	2268.1	1199.7	6686.2	1200.0
9.6	2262.6	1199.7	6668.9	1200.1
9.8	2257.3	1199.8	6651.9	1200.1
10.0	2252.0	1199.8	6635.1	1200.2
10.2	2246.8	1199.9	6618.5	1200.2
10.4	2241.6	1199.9	6602.0	1200.3
10.6	2236.5	1200.0	6585.5	1200.3
10.8	2231.4	1200.0	6569.0	1200.4
11.0	2226.3	1200.1	6552.4	1200.4
11.5	2218.0	1200.1	0.0	0.0
12.0	2209.2	1200.2	0.0	0.0
12.5	2199.7	1200.3	0.0	0.0
13.0	2189.2	1200.4	0.0	0.0
13.5	2177.7	1200.5	0.0	0.0
14.0	2165.1	1200.6	0.0	0.0
14.5	2151.4	1200.7	0.0	0.0
15.0	2136.6	1200.8	0.0	0.0
15.5	2120.9	1201.0	0.0	0.0
16.0	2104.3	1201.1	0.0	0.0
16.5	2086.9	1201.2	0.0	0.0

Time (sec)	Break Flow (upstream of the break)		Break Flow (downstream of the break)	
	Mass (lbm/sec)	Enthalpy (Btu/lbm)	Mass (lbm/sec)	Enthalpy (Btu/lbm)
17.0	2068.8	1201.4	0.0	0.0
17.5	2050.1	1201.5	0.0	0.0
18.0	2030.9	1201.7	0.0	0.0
18.5	2011.4	1201.8	0.0	0.0
19.0	1991.6	1202.0	0.0	0.0
19.5	1971.6	1202.1	0.0	0.0
20.0	1951.6	1202.2	0.0	0.0
20.5	1931.6	1202.4	0.0	0.0
21.0	1911.7	1202.5	0.0	0.0
21.5	1891.9	1202.6	0.0	0.0
22.0	1872.4	1202.8	0.0	0.0
22.5	1853.2	1202.9	0.0	0.0
23.0	1834.2	1203.0	0.0	0.0
23.5	1815.7	1203.1	0.0	0.0
24.0	1797.5	1203.2	0.0	0.0
24.5	1779.8	1203.3	0.0	0.0
25.0	1762.4	1203.4	0.0	0.0
25.5	1745.5	1203.5	0.0	0.0
26.0	1729.0	1203.6	0.0	0.0
26.5	1712.9	1203.7	0.0	0.0
27.0	1697.2	1203.8	0.0	0.0
27.5	1681.5	1203.8	0.0	0.0
28.0	1666.6	1203.9	0.0	0.0
28.5	1652.1	1204.0	0.0	0.0

Table 6.2.1-27 Mass and Energy Release Data for the Secondary Steam System Piping Failure Case 1 - Highest Containment Temperature

(Sheet 3 of 4)

Time (sec)	Break Flow (upstream of the break)		Break Flow (downstream of the break)	
	Mass (lbm/sec)	Enthalpy (Btu/lbm)	Mass (lbm/sec)	Enthalpy (Btu/lbm)
29.0	1638.0	1204.0	0.0	0.0
29.5	1624.3	1204.1	0.0	0.0
30.0	1610.9	1204.1	0.0	0.0
30.5	1597.9	1204.2	0.0	0.0
31.0	1585.2	1204.2	0.0	0.0
31.5	1572.8	1204.3	0.0	0.0
32.0	1560.8	1204.3	0.0	0.0
32.5	1549.1	1204.4	0.0	0.0
33.0	1537.7	1204.4	0.0	0.0
33.5	1526.6	1204.4	0.0	0.0
34.0	1515.8	1204.5	0.0	0.0
34.5	1505.3	1204.5	0.0	0.0
35.0	1495.1	1204.5	0.0	0.0
35.5	1485.2	1204.5	0.0	0.0
36.0	1475.6	1204.6	0.0	0.0
36.5	1466.3	1204.6	0.0	0.0
37.0	1457.2	1204.6	0.0	0.0
37.5	1448.4	1204.6	0.0	0.0
38.0	1439.9	1204.6	0.0	0.0
38.5	1431.6	1204.7	0.0	0.0
39.0	1423.6	1204.7	0.0	0.0
39.5	1415.8	1204.7	0.0	0.0
40.0	1408.3	1204.7	0.0	0.0
40.5	1401.0	1204.7	0.0	0.0

Time (sec)	Break Flow (upstream of the break)		Break Flow (downstream of the break)	
	Mass (lbm/sec)	Enthalpy (Btu/lbm)	Mass (lbm/sec)	Enthalpy (Btu/lbm)
41.0	1393.9	1204.7	0.0	0.0
41.5	1387.1	1204.7	0.0	0.0
42.0	1380.4	1204.7	0.0	0.0
42.5	1374.0	1204.7	0.0	0.0
43.0	1367.8	1204.7	0.0	0.0
43.5	1361.8	1204.8	0.0	0.0
44.0	1355.9	1204.8	0.0	0.0
44.5	1350.3	1204.8	0.0	0.0
45.0	1344.9	1204.8	0.0	0.0
45.5	1339.6	1204.8	0.0	0.0
46.0	1334.5	1204.8	0.0	0.0
46.5	1329.6	1204.8	0.0	0.0
47.0	1324.9	1204.8	0.0	0.0
47.5	1320.4	1204.8	0.0	0.0
48.0	1316.0	1204.8	0.0	0.0
48.5	1311.7	1204.8	0.0	0.0
49.0	1307.7	1204.8	0.0	0.0
49.5	1303.7	1204.8	0.0	0.0
50.0	1299.9	1204.8	0.0	0.0
55.0	1270.6	1204.8	0.0	0.0
60.0	1249.9	1204.8	0.0	0.0
65.0	1235.1	1204.8	0.0	0.0
70.0	1224.0	1204.7	0.0	0.0
75.0	1215.2	1204.7	0.0	0.0

Table 6.2.1-27 Mass and Energy Release Data for the Secondary Steam System Piping Failure Case 1 - Highest Containment Temperature

(Sheet 4 of 4)

Time (sec)	Break Flow (upstream of the break)		Break Flow (downstream of the break)	
	Mass (lbm/sec)	Enthalpy (Btu/lbm)	Mass (lbm/sec)	Enthalpy (Btu/lbm)
80.0	1208.5	1204.7	0.0	0.0
85.0	1203.4	1204.7	0.0	0.0
90.0	1199.2	1204.7	0.0	0.0
95.0	1195.8	1204.7	0.0	0.0
100.0	1193.0	1204.7	0.0	0.0
105.0	1190.5	1204.7	0.0	0.0
110.0	1188.3	1204.7	0.0	0.0
115.0	1186.4	1204.7	0.0	0.0
120.0	1184.7	1204.7	0.0	0.0
125.0	1183.1	1204.7	0.0	0.0
130.0	1181.7	1204.7	0.0	0.0
135.0	1180.4	1204.7	0.0	0.0
140.0	1179.2	1204.7	0.0	0.0
145.0	1178.2	1204.7	0.0	0.0
150.0	1177.2	1204.7	0.0	0.0
155.0	1176.4	1204.7	0.0	0.0
160.0	1175.6	1204.7	0.0	0.0
165.0	1174.9	1204.7	0.0	0.0
170.0	1174.3	1204.7	0.0	0.0
175.0	1173.8	1204.7	0.0	0.0
180.0	1165.6	1204.7	0.0	0.0
185.0	1080.9	1204.4	0.0	0.0
190.0	928.4	1203.5	0.0	0.0
195.0	455.8	1194.8	0.0	0.0

Time (sec)	Break Flow (upstream of the break)		Break Flow (downstream of the break)	
	Mass (lbm/sec)	Enthalpy (Btu/lbm)	Mass (lbm/sec)	Enthalpy (Btu/lbm)
200.0	236.4	1183.1	0.0	0.0
205.0	0.0	0.0	0.0	0.0
210.0	0.0	0.0	0.0	0.0
215.0	0.0	0.0	0.0	0.0
220.0	0.0	0.0	0.0	0.0
225.0	0.0	0.0	0.0	0.0
230.0	0.0	0.0	0.0	0.0
235.0	0.0	0.0	0.0	0.0
240.0	0.0	0.0	0.0	0.0
245.0	0.0	0.0	0.0	0.0
250.0	0.0	0.0	0.0	0.0
300.0	0.0	0.0	0.0	0.0
350.0	0.0	0.0	0.0	0.0
400.0	0.0	0.0	0.0	0.0
450.0	0.0	0.0	0.0	0.0
500.0	0.0	0.0	0.0	0.0

Table 6.2.1-28 Break Mass and Energy Flow for the Double Ended Guillotine Break Resulting in the Minimum Containment Pressures for use in ECCS Evaluation (Sheet 1 of 6)

Time (sec)	Break Flow		Spilled Flow	
	Mass (lbm/sec)	Enthalpy (Btu/lbm)	Mass (lbm/sec)	Enthalpy (Btu/lbm)
0.0	11753.1	547.4	0.0	0.0
2.0	79462.3	553.7	3545.4	64.5
4.0	51769.8	573.6	3214.0	64.3
6.0	40931.7	602.7	2952.7	64.3
8.0	33446.9	638.7	2761.4	64.3
10.0	28268.4	658.0	2592.6	64.3
12.0	21437.0	706.1	2464.1	64.3
14.0	14579.2	820.8	2345.0	64.3
16.0	12390.8	730.0	2249.5	64.3
18.0	11010.8	570.6	2165.9	64.2
20.0	10356.0	423.4	2090.4	64.2
22.0	7454.1	385.2	2029.9	64.2
24.0	5662.4	331.7	1971.7	64.2
26.0	5512.1	255.0	1920.9	64.2
28.0	4521.1	229.8	1876.1	64.2
30.0	7229.5	175.9	1831.7	64.2
32.0	990.7	230.2	1790.9	64.2
34.0	82.9	1282.4	1754.5	64.1
36.0	32.4	1284.9	525.3	64.1
38.0	43.6	1287.0	382.7	64.1
40.0	150.6	1190.6	382.0	64.0
42.0	82.8	1286.2	379.8	64.0
44.0	6488.3	155.2	378.9	64.0
46.0	528.1	358.5	376.9	64.0
48.0	4381.9	163.6	375.7	64.0
50.0	1677.2	198.5	374.1	64.0
52.0	7972.8	146.8	372.6	64.0
54.0	2276.9	172.4	371.2	64.0
56.0	194.8	740.5	369.5	64.0
58.0	2448.9	218.1	367.9	64.0
60.0	5301.0	209.4	366.6	64.0
62.0	441.3	618.9	365.1	63.9
64.0	305.6	660.7	363.3	63.9
66.0	1515.0	330.7	361.9	63.9
68.0	340.0	738.4	360.7	63.9
70.0	1143.6	337.6	359.2	63.9

Table 6.2.1-28 Break Mass and Energy Flow for the Double Ended Guillotine Break Resulting in the Minimum Containment Pressures for use in ECCS Evaluation (Sheet 2 of 6)

Time (sec)	Break Flow		Spilled Flow	
	Mass (lbm/sec)	Enthalpy (Btu/lbm)	Mass (lbm/sec)	Enthalpy (Btu/lbm)
72.0	361.3	769.2	357.6	63.9
74.0	398.9	553.0	356.4	63.9
76.0	493.7	527.9	355.3	63.9
78.0	348.0	653.6	353.8	63.9
80.0	742.1	410.3	352.3	63.8
82.0	368.0	718.7	351.2	63.8
84.0	432.7	563.7	350.0	63.8
86.0	573.0	500.3	348.5	63.8
88.0	619.8	449.6	347.0	63.8
90.0	620.0	495.1	345.8	63.8
92.0	588.6	506.7	344.5	63.8
94.0	1462.0	323.1	343.0	63.8
96.0	811.5	435.6	341.6	63.7
98.0	695.6	463.1	340.6	63.7
100.0	1539.4	323.7	339.4	63.7
102.0	1164.3	357.6	337.9	63.7
104.0	731.8	471.5	336.8	63.7
106.0	1428.2	331.4	335.9	63.7
108.0	848.5	415.3	334.7	63.7
110.0	787.8	453.8	333.3	63.7
112.0	1284.1	346.1	332.3	63.6
114.0	644.6	489.7	331.5	63.6
116.0	708.4	465.9	330.2	63.6
118.0	1596.1	315.3	328.8	63.6
120.0	1039.7	375.3	327.8	63.6
122.0	1085.7	392.9	326.8	63.6
124.0	1377.7	338.5	325.5	63.6
126.0	780.8	399.5	324.4	63.5
128.0	1357.4	340.5	323.5	63.5
130.0	1338.0	324.4	322.6	63.5
132.0	1488.1	306.6	321.4	63.5
134.0	1452.7	315.3	320.3	63.5
136.0	1474.8	311.5	319.5	63.5
138.0	1202.9	352.5	318.5	63.5
140.0	1444.4	327.8	317.1	63.5
142.0	1397.9	319.4	316.3	63.4
144.0	1234.0	346.6	315.9	63.4

Table 6.2.1-28 Break Mass and Energy Flow for the Double Ended Guillotine Break Resulting in the Minimum Containment Pressures for use in ECCS Evaluation (Sheet 3 of 6)

Time (sec)	Break Flow		Spilled Flow	
	Mass (lbm/sec)	Enthalpy (Btu/lbm)	Mass (lbm/sec)	Enthalpy (Btu/lbm)
146.0	886.1	369.0	315.3	63.4
148.0	1517.8	316.6	314.0	63.4
150.0	1086.6	330.0	314.0	63.4
152.0	556.1	522.5	312.9	63.4
154.0	1700.2	271.0	311.8	63.4
156.0	605.4	491.1	310.5	63.4
158.0	1459.0	305.2	309.7	63.4
160.0	1672.2	270.7	307.9	63.3
162.0	795.2	446.8	307.0	63.3
164.0	1727.6	288.9	303.7	63.3
166.0	1131.7	346.5	297.3	63.3
168.0	1977.9	284.9	288.5	63.4
170.0	1528.1	312.1	277.5	63.4
172.0	1169.9	351.2	266.4	63.4
174.0	1288.2	326.9	255.7	63.4
176.0	695.3	429.2	246.4	63.5
178.0	939.4	364.3	239.9	63.5
180.0	1472.3	296.2	237.8	63.6
182.0	1615.8	299.8	243.1	63.7
184.0	1710.8	295.4	261.5	63.9
186.0	1281.2	333.4	303.4	64.1
188.0	1379.9	322.2	374.6	64.7
190.0	1396.3	315.2	358.6	68.2
192.0	928.8	405.1	95.4	108.3
194.0	854.6	412.8	123.8	123.5
196.0	1203.8	339.1	78.0	212.6
198.0	1334.6	344.5	41.8	435.4
200.0	933.2	387.3	27.9	693.5
202.0	806.2	392.1	22.9	851.6
204.0	605.7	466.2	15.8	910.7
206.0	770.5	474.1	15.3	931.7
208.0	538.8	560.8	14.8	939.8
210.0	639.3	500.0	14.4	940.0
212.0	507.5	549.4	14.1	938.1
214.0	458.5	555.8	13.8	935.8
216.0	1369.1	258.9	13.5	933.4
218.0	535.6	520.6	13.2	931.0

Table 6.2.1-28 Break Mass and Energy Flow for the Double Ended Guillotine Break Resulting in the Minimum Containment Pressures for use in ECCS Evaluation (Sheet 4 of 6)

Time (sec)	Break Flow		Spilled Flow	
	Mass (lbm/sec)	Enthalpy (Btu/lbm)	Mass (lbm/sec)	Enthalpy (Btu/lbm)
220.0	433.9	720.6	12.9	928.8
222.0	449.5	768.0	12.6	926.8
224.0	405.7	893.6	12.3	924.9
226.0	637.6	623.5	12.0	923.2
228.0	795.8	522.9	11.7	921.6
230.0	844.0	535.3	11.5	920.2
232.0	757.1	566.0	11.2	918.8
234.0	812.8	519.4	10.9	917.6
236.0	1006.0	409.3	10.6	916.4
238.0	809.6	553.4	10.4	915.3
240.0	1154.7	419.7	10.1	914.3
242.0	1268.7	408.8	9.9	913.4
244.0	1190.3	437.0	9.6	912.5
246.0	961.4	518.1	9.4	911.7
248.0	1048.5	471.1	9.1	911.0
250.0	1142.9	447.2	8.9	910.3
252.0	717.7	613.1	8.6	909.6
254.0	484.8	825.9	8.4	909.0
256.0	247.0	1211.9	8.2	908.4
258.0	293.2	1140.6	7.9	907.9
260.0	247.3	1209.1	7.7	907.4
262.0	222.8	1207.4	7.5	906.9
264.0	229.7	1215.4	7.3	906.4
266.0	212.7	1210.4	7.1	906.0
268.0	221.6	1213.3	6.9	905.6
270.0	221.3	1185.4	6.7	905.2
272.0	212.9	1214.3	6.5	904.9
274.0	272.0	1122.1	6.3	904.5
276.0	213.1	1187.1	6.1	904.2
278.0	291.6	1034.3	5.9	903.9
280.0	212.4	1175.8	5.8	903.6
282.0	284.4	1039.4	5.6	903.4
284.0	199.9	1204.0	5.4	903.1
286.0	224.5	1147.1	5.2	902.9
288.0	208.2	1150.5	5.1	902.6
290.0	201.6	1226.7	4.9	902.4
292.0	245.4	1047.6	4.7	902.2
294.0	217.2	1179.3	4.6	902.1

Table 6.2.1-28 Break Mass and Energy Flow for the Double Ended Guillotine Break Resulting in the Minimum Containment Pressures for use in ECCS Evaluation (Sheet 5 of 6)

Time (sec)	Break Flow		Spilled Flow	
	Mass (lbm/sec)	Enthalpy (Btu/lbm)	Mass (lbm/sec)	Enthalpy (Btu/lbm)
296.0	249.9	1028.5	4.4	901.9
298.0	196.0	1218.0	4.2	901.7
300.0	290.7	940.6	4.1	901.6
302.0	259.7	1034.3	3.9	901.5
304.0	348.2	770.3	3.7	901.3
306.0	193.6	1228.9	3.6	901.2
308.0	330.0	819.0	3.4	901.1
310.0	187.9	1225.1	3.3	901.0
312.0	403.7	773.2	3.1	900.9
314.0	177.9	1233.7	3.0	900.8
316.0	192.9	1158.1	2.8	900.7
318.0	176.2	1227.2	2.7	900.6
320.0	212.1	1183.0	2.5	900.6
322.0	176.5	1226.2	2.4	900.5
324.0	205.0	1200.4	2.3	900.4
326.0	180.3	1215.5	2.2	900.3
328.0	247.5	1147.8	2.1	900.3
330.0	183.6	1221.5	2.0	900.2
332.0	300.6	983.5	1.8	900.1
334.0	226.5	1097.0	1.7	900.1
336.0	441.2	769.4	1.6	900.1
338.0	260.7	1005.2	1.5	900.1
340.0	292.1	973.2	1.4	900.1
342.0	234.3	1100.1	1.3	900.1
344.0	271.7	1046.6	1.2	900.2
346.0	186.5	1231.7	1.1	900.2
348.0	405.2	808.1	1.0	900.2
350.0	190.5	1231.0	0.9	900.2
352.0	271.0	1082.0	0.8	900.2
354.0	197.1	1234.8	0.7	900.2
356.0	288.9	1061.9	0.6	900.3
358.0	205.3	1232.8	0.6	900.3
360.0	232.2	1170.6	0.5	900.3
362.0	207.2	1229.4	0.4	900.3
364.0	209.5	1207.5	0.4	900.3
366.0	203.3	1235.0	0.3	900.3
368.0	207.2	1234.2	0.3	900.4
370.0	190.2	1234.4	0.3	900.4

Table 6.2.1-28 Break Mass and Energy Flow for the Double Ended Guillotine Break Resulting in the Minimum Containment Pressures for use in ECCS Evaluation (Sheet 6 of 6)

Time (sec)	Break Flow		Spilled Flow	
	Mass (lbm/sec)	Enthalpy (Btu/lbm)	Mass (lbm/sec)	Enthalpy (Btu/lbm)
372.0	211.5	1233.8	0.2	900.4
374.0	210.8	1234.8	0.2	900.4
376.0	214.6	1231.1	0.2	900.4
378.0	226.4	1230.0	0.2	900.4
380.0	224.9	1226.1	0.2	900.5
382.0	231.0	1225.5	0.2	900.5
384.0	236.5	1220.6	0.2	900.5
386.0	240.9	1224.5	0.2	900.5
388.0	236.0	1225.2	0.2	900.5
390.0	241.1	1227.7	0.2	900.5
392.0	226.5	1229.4	0.2	900.6
394.0	241.3	1232.0	0.2	900.6
396.0	239.6	1229.3	0.2	900.6
398.0	245.9	1224.0	0.2	900.6
399.5	254.0	1217.8	0.2	900.6

Table 6.2.1-29 Basic Specifications of ESF used in Minimum Containment Pressure Analysis

US-APWR Specification	Value	
	Full Capacity	Value Used for Containment Analysis
I. Passive Safety Injection Systems		
A. Number of Accumulators	3	3
B. Pressure, psig	585	585
II. Active Safety Injection Systems		
A. Safety Injection System		
1. Number of Lines	4	2
2. Number of Pumps	4	2
III. Containment Spray System		
A. Number of Lines	4	4
B. Number of Pumps	4	4
C. Flow Rate, gpm/unit	2450	2450
D. Activation Delay, seconds	5	5

Table 6.2.1-30 Passive Heat Sinks used in the Minimum Containment Pressure Analysis for ECCS Capability Studies (Sheet 1 of 2)

Passive Heat Sinks	Heat Transfer Area (ft^2)	Material	Thickness (in)
(1) Containment Dome	36,710	Carbon Steel Concrete	0.257 44.1
(2) Containment Cylinder	73,170	Carbon Steel Concrete	0.400 53.9
(3) Thick Concrete - Internal Separation Walls, Connection Path, Reactor Drain Pump Room, HAVC Header Room, SG Compartment	40,944	Concrete	31.7
(4) Thin Concrete - Internal Separation Walls, HAVC Header Room, Letdown Hx Rooms, Regenerative Hx Rooms	19,430	Concrete	7.54
(5) Lined Concrete (Stainless Steel) - Web Plate, Reactor Vessel Cavity Walls, RWSP Inner Walls	27,342	Stainless Steel Carbon Steel Concrete	0.118 0.472 45.6
(6) Lined Concrete (Stainless Steel) - Web Plate, Reactor Vessel Cavity Walls, RWSP Floor and Ceiling	282	Stainless Steel Carbon Steel Concrete	0.118 0.197 22.6
(7) Lined Concrete (Carbon Steel, Thick) - Primary Shield Walls, Secondary Shield Walls, HAVC Header Room, Reactor Drain Tank Rooms, Pressurizer Room, Missile Shield, Deck Plates, Reactor Vessel Lower Cavity Walls, SG Compartment	162,994	Carbon Steel Concrete	0.549 18.9
(8) Lined Concrete (Carbon Steel, Thin) - Deck Plates	162	Carbon Steel Concrete	0.311 7.08
(9) Internal Structure (Carbon Steel Thickness greater equals 2-inch) - Equipment Hatch, Air Lock, Accumulator Tanks, SG Supports, Level Switch	10,663	Carbon Steel	3.07
(10) Internal Structure (Carbon Steel Thickness between 2-inch and 1.2-inch) - Vents, Reactor Vessel Supports, Polar Crane, RCP Lower Bracket, RCP Supports	24,877	Carbon Steel	1.51

Table 6.2.1-30 Passive Heat Sinks used in the Minimum Containment Pressure Analysis for ECCS Capability Studies (Sheet 2 of 2)

Passive Heat Sinks	Heat Transfer Area (ft^2)	Material	Thickness (in)
(11) Internal Structure (Carbon Steel Thickness between 1.2-inch and 0.4-inch) - Air Lock, Accumulator Column Supports, Excess Letdown Hx, Manipulator Crane Rail, Refueling Machine, Piping Supports, Covering Steel, Ring Guarder, Vent, NIS Electrical Horn, ITV Instruments, SG Supports, Pressurizer Supports, RCP Upper Bracket, RCP Flame, Let Down Hx	186,943	Carbon Steel	0.472
(12) Internal Structure (Carbon Steel Thickness between 0.4-inch and 0.08-inch) - Reactor Drain Tank Column Supports, Excess Letdown Hx Column Supports, Refueling Crane, Duct Supports, Duct Connection Flanges, HAVC Units, Fans, Connecting Box, I/C Piping Supports, Cable Tubes, Penetration Boxes, Electrical Boards, Trans, Motor, Luminaires, I/C Supports, Electrical Boxes, I/C Rack, Stairways, RCP Duct, RCP Air Cooler, RCP Flywheel Cover, NIS Source Range Detector, Generative Hx Support	300,712	Carbon Steel	0.238
(13) Internal Structure (Carbon Steel Thickness less than 0.08-inch) - Gratings, Ductings, Fans, HAVC Unts, ICIS Boxes, Cable Trays, Duct Connecting Flanges, I/C Devices, ITV Instruments, NIS Air Horn	233,954	Carbon Steel	0.0496
(14) Internal Structure (Stainless Steel) - Reactor Drain Tank, RCP Purged Water Tank, Refueling Machine, Refueling Crane, RMS Indicators, ICIS Instruments, DRPI Tube, Transmitters, Level Switch, Luminaires, Temporary Fuel Rack, Reactor Drain Pump, Containment Sump Pump, Piping Support in the RWSP	12,976	Stainless Steel	0.295
(15) Copper - Coils, Copper Tubes, Luminaires, Cooling Coil's Fins	250,972	Copper	0.0088
(16) Uninsulated Cold-Water-Filled Piping (Stainless Steel)	14,892	Stainless Steel Water	0.323 1.36
(17) Empty Piping (Stainless Steel)	982	Stainless Steel	0.126
(18) Uninsulated Cold-Water-Filled Piping (Carbon Steel)	663	Carbon Steel Water	0.197 0.630
(19) Empty Piping (Carbon Steel)	896	Carbon Steel	0.138
(20) Aluminum - NIS Power Range Detector	59	Aluminum	0.118
(21) Web Plate	622	Carbon Steel	41.4

Note: The COL applicant is responsible to provide best estimates of these heat sinks in the COL application, update the FSAR based on as-built information and confirm the values are bounded by the values in containment analyses.

Table 6.2.1-31 Passive Heat Sinks Material Properties used for the Minimum Containment Pressure Analysis

Material	Density, lb/ft^3	Specific Heat, Btu/lb-°F	Thermal Conductivity, Btu/hr-ft-°F
Carbon Steel	490	0.12	27
Stainless Steel	494	0.12	9.2
Concrete	145	0.16	0.92
Copper	558	0.1	205
Aluminum	169	0.22	128
Water	62	1	0.35

Table 6.2.2-1 Input Values Employed in CSS Evaluation Calculations

CSS SPRAY NOZZLES	
Quantity	348
Type	Ramp Bottom, 0.375 in orifice
Spray Pattern	Hollow Cone
Flow per Nozzle	15.2 gpm at 40 psig
Material	Stainless steel
CS/RHR PUMP NPSH EVALUATION	
$h_{Static\ Head}$	29.7 ft.
$h_{line\ loss}$	7.1 ft.
$h_{ECC/CS\ strainer}$	≤4.7 ft. Note 1
$NPSH_{available}$	17.9 ft.
$NPSH_{required}$	16.4 ft.
SI PUMP NPSH EVALUATION	
$h_{Static\ Head}$	29.7 ft.
$h_{line\ loss}$	3.1 ft.
$h_{ECC/CS\ strainer}$	≤4.7 ft. Note 1
$NPSH_{available}$	21.9 ft.
$NPSH_{required}$	15.7 ft.

Note 1 - Contains head loss due to debris clogging and chemical effect.

Table 6.2.2-2 Comparison of RWSP Recirculation Intake Debris Strainer Design to RG 1.82 Requirements (Sheet 1 OF 21)

No.	Regulatory Position	US-APWR Design
1.1	**Features Needed to Minimize the Potential for Loss of NPSH** The ECC sumps, which are the source of water for such functions as ECC and containment heat removal following a LOCA, should contain an appropriate combination of the following features and capabilities to ensure the availability of the ECC sumps for long-term cooling. The adequacy of the combinations of features and capabilities should be evaluated using the criteria and assumptions in Regulatory Position 1.3.	**Design Features and Capabilities** The design features and capabilities employed to minimize the potential for loss of NPSH are presented below.
1.1.1.1	A minimum of two sumps should be provided, each with sufficient capacity to service one of the redundant trains of the ECCS and CSS. The distribution of water sources and containment spray between the sumps should be considered in the calculation of boron concentration in the sumps for evaluating post-LOCA subcriticality and shutdown margins. Typically, these calculations are performed assuming the minimum boron concentration and the minimum dilution sources. Similar considerations should also be given in the calculation of time for hot leg switchover, which is calculated assuming the maximum boron concentration and a minimum of dilution sources.	Four separate, independent, and redundant 50% capacity trains each of CSS and SI are provided. Each quadrant of the (common) RWSP contains paired CSS and SI suction pipes (four pairs; one pair per quadrant). Each pair of CSS and SI suction pipes ends in a suction sump (four total), with each suction sump protected by an associated suction strainer (four total). The RWSP is the common suction source to the ECCS and CSS. The RWSP contains approximately 81,230 ft^3 of 4,000 ppm boric acid at pH 4.3. Crystalline NaTB is added to raise pH to at least 7 for iodine removal and long term LOCA cooling and recovery. LOCA spillage and spray return flow paths to the RWSP promote full mixing.

Table 6.2.2-2 Comparison of RWSP Recirculation Intake Debris Strainer Design to RG 1.82 Requirements (Sheet 2 OF 21)

No.	Regulatory Position	US-APWR Design
1.1.1.2	To the extent practical, the redundant sumps should be physically separated by structural barriers from each other and from high-energy piping systems to preclude damage from LOCA, and, if within design basis, main steam or main feedwater break consequences to the components of both sumps (e.g., trash rakes, sump screens, and sump outlets) by whipping pipes or high-velocity jets of water or steam.	Four strainers and sumps are physically separated and located inside RWSP compartment which are away from pipe area.
1.1.1.3	The sumps should be located on the lowest floor elevation in the containment exclusive of the reactor vessel cavity to maximize the pool depth relative to the sump screens. The sump outlets should be protected by appropriately oriented (e.g., at least two vertical or nearly vertical) debris interceptors: (1) a fine inner debris screen and (2) a coarse outer trash rack to prevent large debris from reaching the debris screen. A curb should be provided upstream of the trash racks to prevent high-density debris from being swept along the floor into the sump. To be effective, the height of the curb should be appropriate for the pool flow velocities, as the debris can jump over a curb if the velocities are sufficiently high. Experiments documented in NUREG ICR-6772 and NUREGICR-6773 have demonstrated that substantial quantities of settled debris could transport across the sump pool floor to the sump screen by sliding or tumbling.	Containment drains (transfer pipes) into the RWSP are protected from large debris by vertical debris bars capped by a ceiling plate. The sump openings (suction strainers) are located at approximately elevation 3 ft. - 7 in. of containment, with CSS and SI suction at approx - 1 ft. - 5 in. Disk, fin, or cassette-type suction strainer base mounted above the RWSP floor to be used, with maximum debris “pass through” size 0.071 in. Strainer surface area of approximately 2.150 ft^2 each to reduce the flow velocity and resist clogging, with sufficient recirculation flow and submergence to preclude vortexing.
1.1.1.4	The floor in the vicinity of the ECC sump should slope gradually downward away from the sump to further retard floor debris transport and reduce the fraction of debris that might reach the sump screen.	Suction strainer to be base mounted above level RWSP floor. Design analysis inputs for debris transport are conservative.

Table 6.2.2-2 Comparison of RWSP Recirculation Intake Debris Strainer Design to RG 1.82 Requirements (Sheet 3 OF 21)

No.	Regulatory Position	US-APWR Design
1.1.1.5	All drains from the upper regions of the containment should terminate in such a manner that direct streams of water, which may contain entrained debris, will not directly impinge on the debris interceptors or discharge in close proximity to the sump. The drains and other narrow pathways that connect compartments with potential break locations to the ECC sump should be designed to ensure that they would not become blocked by the debris; this is to ensure that water needed for an adequate NPSH margin could not be held up or diverted from the sump.	The transfer pipe openings are equipped with vertical debris bars capped by a ceiling plate. The transfer pipes are located in areas of containment where drains do not directly impinge on them.
1.1.1.6	The strength of the trash racks should be adequate to protect the debris screens from missiles and other large debris. Trash racks and sump screens should be capable of withstanding the loads imposed by expanding jets, missiles, the accumulation of debris, and pressure differentials caused by post-LOCA blockage under design-basis flow conditions. When evaluating the impact from potential expanding jets and missiles, credit for any protection to trash racks and sump screens offered by surrounding structures or credit for remoteness of trash racks and sump screens from potential high energy sources should be justified.	Vertical debris bars and ceiling plate protecting transfer pipe openings are of robust design and provide adequate protection from missiles and other large debris. Suction strainers are designed to Seismic Category I and quality class B standards. Design loads are properly combined and differential pressure caused by potential debris clogging is taken into account as part of the mechanical analysis.
1.1.1.7	Where consistent with the overall sump design and functionality, the top of the debris interceptor structures should be a solid cover plate that is designed to be fully submerged after a LOCA and completion of the ECC injection. The cover plate is intended to provide additional protection to debris interceptor structures from LOCA generated loads. However, the design should also provide a means for the venting of any air trapped underneath the cover.	A conventional suction strainer design with a flat cover plate is not planned. A disk, fin, or cassette-type RWSP suction strainer is to be used.

Table 6.2.2-2 Comparison of RWSP Recirculation Intake Debris Strainer Design to RG 1.82 Requirements (Sheet 4 OF 21)

No.	Regulatory Position	US-APWR Design
1.1.1.8	The debris interceptors should be designed to withstand the inertial and hydrodynamic effects that are due to vibratory motion of a safe shutdown earthquake (SSE) following a LOCA without loss of structural integrity.	As noted in 1.1.1.6 above, the RWSP suction strainers are designed to seismic Category I and quality class B standards.
1.1.1.9	Materials for debris interceptors and sump screens should be selected to avoid degradation during periods of both inactivity and operation and should have a low sensitivity to such adverse effects as stress-assisted corrosion that may be induced by chemically reactive spray during LOCA conditions.	Corrosion resistant (stainless steel) material is used for suction strainers and all inner surfaces of the RWSP.
1.1.1.10	The debris interceptor structures should include access openings to facilitate the inspection of these structures, any vortex suppressors, and the sump outlets.	RWSP hatches are provided and suction strainers are designed for removal during sump inspections.
1.1.1.11	A sump screen design (i.e., size and shape) should be chosen that will avoid the loss of NPSH from debris blockage during the period that the ECCS is required to operate in order to maintain long-term cooling or maximize the time before loss of NPSH caused by debris blockage when used with an active mitigation system (see Regulatory Position 1.1.4).	Strainers are sized appropriately to withstand debris. Because the RWSP has a large floor area, strainers are free from space restrictions and associated debris blockage. An active sump strainer blockage mitigation system (Regulatory Position 1.1.4) is not applicable to the US-APWR.

Table 6.2.2-2 Comparison of RWSP Recirculation Intake Debris Strainer Design to RG 1.82 Requirements (Sheet 5 OF 21)

No.	Regulatory Position	US-APWR Design
1.1.1.12	The possibility of debris-clogging flow restrictions downstream of the sump screen should be assessed to ensure adequate long-term recirculation cooling, containment cooling, and containment pressure control capabilities. The size of the openings in the sump debris screen should be determined considering the flow restrictions of systems served by the ECCS sump. The potential for long thin slivers passing axially through the sump screen and then reorienting and clogging at any flow restriction downstream should be considered. Consideration should be given to the buildup of debris at downstream locations such as the following: containment spray nozzle openings, HPSI throttle valves, coolant channel openings in the core fuel assemblies, fuel assembly inlet debris screens, ECCS pump seals, bearings, and impeller running clearances. If it is determined that a sump screen with openings small enough to filter out particles of debris that are fine enough to cause damage to ECCS pump seals or bearings would be impractical, it is expected that modifications would be made to the ECCS pumps or ECCS pumps would be procured that can operate long-term under the probable conditions.	The debris strainers are made of stainless steel and could use perforated plates in a layered disc design to limit the maximum “pass through” debris size to 0.071 in.
1.1.1.13	ECC and containment spray pump suction inlets should be designed to prevent degradation of pump performance through air ingestion and other adverse hydraulic effects (e.g., circulatory flow patterns, high intake head losses).	RWSP suction strainers are submerged under a minimum of approximately 4 ft. of water during a LOCA. The RWSP recirculation supply is sufficient to preclude adverse hydraulic effects (e.g., vortex formation and high suction head loss). A low approach velocity at the strainer surface also mitigates the risk of vortexing.

Table 6.2.2-2 Comparison of RWSP Recirculation Intake Debris Strainer Design to RG 1.82 Requirements (Sheet 6 OF 21)

No.	Regulatory Position	US-APWR Design
1.1.1.14	All drains from the upper regions of the containment building, as well as floor drains, should terminate in such a manner that direct streams of water, which may contain entrained debris, will not discharge downstream of the sump screen, thereby, bypassing the sump screen.	The US-APWR design of ESF structures, systems, or components (SSCs) does not include a CSS or SIS suction flow path that bypasses the RWSP suction strainers.
1.1.1.15	Advanced strainer designs (e.g., stacked disc strainers) have demonstrated capabilities that are not provided by simple flat plate or cone-shaped strainers or screens. For example, these capabilities include built-in debris traps where debris can collect on surfaces while keeping a portion of the screen relatively free of debris. The convoluted structure of such strainer designs increases the total screen area, and these structures tend to prevent the condition sometimes referred to as the TBE. It may be desirable to include these capabilities in any new sump strainer/screen designs. The performance characteristics and effectiveness of such designs should be supported by the appropriate test data for any particular intended application.	An advanced strainer design is planned for the US-APWR. The risk of TBE occurrence is be evaluated and provided by the COL Applicant.
1.1.2	**Minimizing Debris** The debris (see Regulatory Position 1.3.2) that could accumulate on the sump screen should be minimized.	**Design Features and Capabilities** The design features and capabilities employed to minimize debris are presented below.
1.1.2.1	Cleanliness programs should be established to clean the containment on a regular basis, and plant procedures should be established for the control and removal of foreign materials from the containment.	Cleanliness, housekeeping, and foreign material exclusion areas are administrative controls developed by any applicant referencing the certified US-APWR design for construction and operation.

Table 6.2.2-2 Comparison of RWSP Recirculation Intake Debris Strainer Design to RG 1.82 Requirements (Sheet 7 OF 21)

No.	Regulatory Position	US-APWR Design
1.1.2.2	Insulation types (e.g., fibrous and calcium silicate) that are sources of debris known to readily transports to the sump screen and cause higher head losses may be replaced with insulation (e.g., reflective metallic insulation) that transports less readily and causes less severe head losses once deposited onto the sump screen. If insulation is replaced or otherwise removed during maintenance, abatement procedures should be established to avoid generating debris or its residue in the containment.	Particulate (e.g., Min-K-based) insulation is excluded from the containment by design. Selection, purchase, and installation of specific insulation products are controlled by administrative programs developed by any applicant referencing the certified US-APWR design for construction and operation.
1.1.2.3	To minimize potential debris caused by chemical reaction of the pool water with metals in the containment, exposure of bare metal surfaces (e.g., scaffolding) to containment cooling water through spray impingement or immersion should be minimized, either by removal or by chemical-resistant protection (e.g., coatings or jackets).	The principle measures taken by the US-APWR design to preclude adverse chemical effects includes the use of a buffering agent, NaTB, and excluding particulate-producing material (e.g., Min-K-based insulation) from the containment.
1.1.3	**Instrumentation** If relying on operator action to mitigate the consequences of the accumulation of debris on the ECC sump screens, safety-related instrumentation that provides operators with an indication and audible warning of impending loss of NPSH for ECCS pumps should be available in the MCR.	**Design Features and Capabilities** containment spray and SI pump operating information is available in the MCR to assist in NPSH evaluation and includes flow, suction, discharge pressure, and pump motor current.

Table 6.2.2-2 Comparison of RWSP Recirculation Intake Debris Strainer Design to RG 1.82 Requirements (Sheet 8 OF 21)

No.	Regulatory Position	US-APWR Design
1.1.4	**Active Sump Screen System** An active device or system (see examples in Appendix 5) may be provided to prevent the accumulation of debris on a sump screen or to mitigate the consequences of the accumulation of debris on a sump screen. An active system should be able to prevent debris that may block restrictions found in the systems served by the ECC pumps from entering the system. The operation of the active component or system should not adversely affect the operation of other ECC components or systems. The performance characteristics of an active sump screen system should be supported by the appropriate test data that address head loss performance.	**Design Features and Capabilities** An active sump strainer blockage mitigation system is not applicable to the US-APWR.
1.1.5	**Inservice inspection** To ensure the operability and structural integrity of the trash racks and screens, access openings are necessary to permit the inspection of the ECC sump structures and outlets. Inservice inspection of racks, screens, vortex suppressors, and sump outlets, including a visual examination for evidence of structural degradation or corrosion, should be performed on a regular basis at every refueling period outage. Inspection of ECC sump components late in the outage can ensure the absence of foreign material in the ECC sump.	RWSP hatches are provided and suction strainers are designed for removal during sump inspections. Corrosion resistant (stainless steel) material is used for suction strainers and all inner surfaces of the RWSP. Inservice inspection of strainers, RWSP, vortex suppression devices and evidence of corrosion is the responsibility of any licensee who references the US-APWR certified design for construction and operation.

Table 6.2.2-2 Comparison of RWSP Recirculation Intake Debris Strainer Design to RG 1.82 Requirements (Sheet 9 OF 21)

No.	Regulatory Position	US-APWR Design
1.2	**Evaluation of Alternative Water Sources** To demonstrate that a combination of the features and actions listed above is adequate to ensure long-term cooling and that the five criteria of 10CFR50.46(b) will be met post-LOCA, an evaluation using the guidance and assumptions in Regulatory Position 3.1 is conducted. If relying on operator action to prevent the accumulation of debris on ECC sump screens or to mitigate the consequences of the accumulation of debris on the ECC sump screens, an evaluation is performed to ensure that the operator has adequate indications, training, time, and system capabilities to perform the necessary actions. If not covered by emergency operating procedures, procedures use alternative water sources that activate when unacceptable head loss renders the sump inoperable. The valves needed to align the ECCS and CSSs (taking suction from the recirculation sumps) with an alternative water source are periodically inspected and maintained.	In US-APWR, “operator action to prevent the accumulation of debris on ECC sump strainers or to mitigate the consequences of the accumulation of debris on the ECC sump strainers” and “use of alternate water source” is not required. An active sump strainer blockage mitigation system is not applicable to the US-APWR.

Table 6.2.2-2 Comparison of RWSP Recirculation Intake Debris Strainer Design to RG 1.82 Requirements(Sheet 10 OF 21)

No.	Regulatory Position	US-APWR Design
1.3	**Evaluation of Long-Term Recirculation Capability** The following techniques, assumptions, and guidance is used in a deterministic, plant-specific evaluation to ensure that any implementation of a combination of the features and capabilities listed in Regulatory Position 1.1 are adequate to ensure the availability of a reliable water source for long-term recirculation following a LOCA. The assumptions and guidance listed below are also used to develop test conditions for sump screens. Evaluation and confirmation of (1) sump hydraulic performance (e.g., geometric effects, air ingestion), (2) debris effects (e.g., debris transport, interceptor blockage, head loss), and (3) the combined impact on NPSH available at the pump inlet, is performed to ensure that long-term recirculation cooling is accomplished following a LOCA. Such an evaluation arrives at a determination of NPSH margin calculated at the pump inlet. An assessment is made of the susceptibility to debris blockage of the containment drainage flowpaths to the recirculation sump (to protect against a reduction in available NPSH if substantial amounts of water are held up or diverted away from the sump). An assessment is made of the susceptibility of the flow restrictions in the ECCS and CSS recirculation flow paths downstream of the sump screens and of the recirculation pump seal and bearing assembly design to failure from particulate ingestion and abrasive effects to protect against degradation of long-term recirculation pumping capacity.	**Design Features and Capabilities** Performance of long-term recirculation is evaluated by adopting NEI 04-07 methodology. Further and additional evaluation is conducted in accordance with regulatory guidance considering plant specific information, and is the responsibility of any applicant that references the certified US-APWR design for construction and licensed operation.

Table 6.2.2-2 Comparison of RWSP Recirculation Intake Debris Strainer Design to RG 1.82 Requirements (Sheet 11 OF 21)

No.	Regulatory Position	US-APWR Design
1.3.1.1	ECC and containment heat removal systems should be designed so that sufficient available NPSH is provided to the system pumps, assuming the maximum expected temperature of the pumped fluid and no increase in containment pressure from that present prior to the postulated LOCA. (See Regulatory Position 3.1.2, below.) For sump pools with temperatures less than 212° F, it is conservative to assume that the containment pressure equals the vapor pressure of the sump water. This ensures that credit is not taken for the containment pressurization during the transient. For sub-atmospheric containments, this guidance should apply after the injection phase has terminated. For sub-atmospheric containments, prior to the termination of the injection phase, NPSH analyses should include conservative predictions of the containment atmospheric pressure and sump water temperature as a function of time.	Post-LOCA containment pressure is not credited for US-APWR NPSH evaluation of ECC and containment heat removal systems.
1.3.1.2	For certain operating PWRs for which the design cannot be practicably altered, conformance with Regulatory Position 3.1.1 (above) may not be possible. In these cases, no additional containment pressure should be included in the determination of available NPSH than is necessary to preclude pump cavitation. The calculation of available containment pressure and sump water temperature as a function of time should underestimate the expected containment pressure and overestimated the sump water temperature when determining the available NPSH for this situation.	Not applicable to US-APWR. (This item applies to operating PWR plants only.)

Table 6.2.2-2 Comparison of RWSP Recirculation Intake Debris Strainer Design to RG 1.82 Requirements (Sheet 12 OF 21)

No.	Regulatory Position	US-APWR Design
1.3.1.7	The calculation of pipe and fitting resistance and the calculation of the nominal screen resistance without blockage by debris should be done in a recognized, defensible method or determined from applicable experimental data.	Hydraulic resistance of piping, fittings, and valves is calculated using an approved method using widely recognized and approved industry standards. Head loss of the suction strainer selected and the customary review of the construction configuration is the responsibility of any applicant that selects the certified US-APWR design for construction and operation.
1.3.1.8	Sump screen flow resistance that is due to blockage by LOCA-generated debris or foreign material in the containment that is transported to the suction intake screens should be determined using Regulatory Position 3.4.	Design analysis uses Regulatory Position 3.4.
1.3.1.9	Calculation of available NPSH should be performed as a function of time until it is clear that the available NPSH will not decrease further.	NPSH calculation assumptions and input values are based on limiting (most conservative) conditions that yield the smallest margin.
1.3.2	**Debris Sources and Generation**	**US-APWR Design Feature**
1.3.2.1	Consistent with the requirements of 10CFR50.46, debris generation should be calculated for a number of postulated LOCAs of different sizes, locations, and other properties sufficient to provide assurance that the most severe postulated LOCAs are calculated. The level of severity corresponding to each postulated break should be based on the potential head loss incurred across the sump screen. Some PWRs may need recirculation from the sump for licensing basis events other than LOCAs. Therefore, licensees should evaluate the licensing basis and include potential break locations in the main steam and main feedwater lines, as well in determining the most limiting conditions for sump operation.	The break properties (e.g., sizes, locations) used in the NEI 04-07 methodology are considered for debris generation. Further and additional evaluation of long-term recirculation cooling is conducted in accordance with regulatory guidance considering plant specific information, and is the responsibility of any applicant that references the certified US-APWR design for construction and licensed operation.

Table 6.2.2-2 Comparison of RWSP Recirculation Intake Debris Strainer Design to RG 1.82 Requirements (Sheet 13 OF 21)

No.	Regulatory Position	US-APWR Design
1.3.1.3	For certain operating reactors for which the design cannot be practicably altered, if credit is taken for the operation of an ECCS or containment heat removal pump in cavitation, prototypical pump tests should be performed along with post-test examination of the pump to demonstrate that pump performance will not be degraded and that the pump continues to meet all the performance criteria assumed in the safety analyses. The time period in the safety analyses during which the pump may be assumed to operate while cavitating should not be longer than the time for which the performance tests demonstrate that the pump meets performance criteria.	Not applicable to US-APWR. (This item applies to operating PWR plants only.)
1.3.1.4	The decay and residual heat produced following accident initiation should be included in the determination of the water temperature. The uncertainty in the determination of the decay heat should be included in this calculation. The residual heat should be calculated with margin.	The post-LOCA temperature-time profile of the RWSP is determined by analysis that considers decay and residual heat, and includes appropriate uncertainty and margin.
1.3.1.5	The hot channel correction factor specified in (ANSI)/HI 1.1-1.5-1994 should not be used in determining the margin between the available and required NPSH for ECCS and containment heat removal system pumps.	The Hot Channel Correction Factor is not considered in the US-APWR.
1.3.1.6	The calculation of available NPSH should minimize the height of water above the pump suction (i.e., the level of water on the containment floor). The calculated height of water on the containment floor should not consider quantities of water that do not contribute to the sump pool (e.g., atmospheric steam, pooled water on floors and in refueling canals, spray droplets and other falling water). The amount of water in enclosed areas that cannot be readily returned to the sump should not be included in the calculated height of water on the containment floor.	Post-LOCA water level in the RWSP is conservatively estimated and does not consider the quantity of water (including “trapped” water in enclosed areas) that does not contribute to the RWSP.

Table 6.2.2-2 Comparison of RWSP Recirculation Intake Debris Strainer Design to RG 1.82 Requirements (Sheet 14 OF 21)

No.	Regulatory Position	US-APWR Design
1.3.2.2	An acceptable method for estimating the amount of debris generated by a postulated LOCA is to use the zone of influence (ZOI). Examples of this approach are provided in NUREG/CR-6224 and Boiling Water Reactor Owners' Group (BWROG) Utility Resolution Guidance (NEDO-32686 and the staffs Safety Evaluation on the BWROG's response to NRC Bulletin 96-03). A representation of the ZOI for commonly-used insulation materials is shown in Figure 3. The size and shape of the ZOI should be supported by analysis or experiments for the break and potential debris. The size and shape of the ZOI should be consistent with the debris source (e.g., insulation, fire barrier materials) damage pressures, (i.e., the ZOI should extend until the jet pressures decrease below the experimentally determined damage pressures appropriate for the debris source). The volume of debris contained within the ZOI should be used to estimate the amount of debris generated by a postulated break. The size distribution of debris created in the ZOI should be determined by analysis or experiments. The shock wave generated during the postulated pipe break and the subsequent jet should be the basis for estimating the amount of debris generated and the size or size distribution of the debris generated within the ZOI. Certain types of material used in a small quantity inside the containment can, with adequate justification, be demonstrated to make a marginal contribution to the debris loading for the ECC sump. If debris generation and debris transport data have not been determined experimentally for such material, it may be grouped with another, like material existing in large quantities. For example, a small quantity of fibrous filtering material may be grouped with a substantially large quantity of fibrous insulation debris, and the debris generation and transport data for the filter material need not be determined experimentally. However, such analyses are valid only if the small quantity of material treated in this manner does not have a significant effect when combined with other materials (e.g., a small quantity of calcium silicate combined with fibrous debris).	The debris generated by a postulated pipe break is estimated by applying the NEI 04-07 methodology. Further and additional evaluation of long-term recirculation cooling is conducted in accordance with regulatory guidance considering plant specific information, and is the responsibility of any applicant that references the certified US-APWR design for construction and licensed operation.

Table 6.2.2-2 Comparison of RWSP Recirculation Intake Debris Strainer Design to RG 1.82 Requirements (Sheet 15 OF 21)

No.	Regulatory Position	US-APWR Design
1.3.2.5	The cleanliness of the containment during plant operation should be considered when estimating the amount and type of debris available to block the ECC sump screens. The potential for such material (e.g., thermal insulation other than piping insulation, ropes, fire hoses, wire ties, tape, ventilation system filters, permanent tags or stickers on plant equipment, rust flakes from unpainted steel surfaces, corrosion products, dust and dirt, latent individual fibers) to impact head loss across the ECC sump screens should also be considered.	Cleanliness, housekeeping and foreign material exclusion areas are administrative controls and programs to be developed by any applicant referencing the certified US-APWR design for construction and operation.
1.3.2.6	In addition to debris generated by jet forces from the pipe rupture, debris created by the resulting containment environment (thermal and chemical) should be considered in the analyses. Examples of this type of debris would be disbondment of coatings in the form of chips and particulates or formation of chemical debris (precipitants) caused by chemical reactions in the pool.	Principle measures taken by the US-APWR design to preclude adverse chemical effects include the use of the buffering agent, NaTB, and design considerations that exclude particulate producing material (e.g., Min-K-based insulation) from containment.
1.3.2.7	Debris generation that is due to continued degradation of insulation and other debris when subjected to turbulence caused by cascading water flows from upper regions of the containment, or near the break overflow region should be considered in the analyses.	Break properties and debris production considerations are based on NEI 04-07 methodology. Further and additional evaluation of long-term recirculation cooling is conducted in accordance with regulatory guidance considering plant specific information, and is the responsibility of any applicant that references the certified US-APWR design for construction and licensed operation.

Table 6.2.2-2 Comparison of RWSP Recirculation Intake Debris Strainer Design to RG 1.82 Requirements (Sheet 16 OF 21)

No.	Regulatory Position	US-APWR Design
1.3.2.3	A sufficient number of breaks in each high-pressure system that relies on recirculation should be considered to reasonably bound variations in debris generation by the size, quantity, and type of debris. At a minimum, the following postulated break locations should be considered. Breaks in the reactor coolant system (e.g., hot leg, cold leg, pressurizer surge line) and, depending on the plant licensing basis, main steam and main feedwater lines with the largest amount of potential debris within the postulated ZOI. Large breaks with two or more different types of debris, including the breaks with the most variety of debris, within the expected ZOI. Breaks in areas with the most direct path to the sump, medium and large breaks with the largest potential particulate debris to insulation ratio by weight. Breaks that generate an amount of fibrous debris that, after its transport to the sump screen, could form a uniform thin bed that could subsequently filter sufficient particulate debris to create a relatively high head loss referred to as the TBE. The minimum thickness of fibrous debris needed to form a thin bed has typically been estimated at 0.125 inch thick, based on the nominal insulation density (NUREG/CR-6224).	The break properties (e.g., sizes, locations) used in the NEI 04-07 methodology are considered. Further and additional evaluation of long-term recirculation cooling is conducted in accordance with regulatory guidance considering plant specific information, and is the responsibility of any applicant that references the certified US-APWR design for construction and licensed operation.
1.3.2.4	All insulation (e.g., fibrous, calcium silicate, reflective metallic), painted surfaces, fire barrier materials, and fibrous, cloth, plastic, or particulate materials within the ZOI should be considered a debris source. Analytical models or experiments should be used to predict the size of the postulated debris. For breaks postulated in the vicinity of the pressure vessel, the potential for debris generation from the packing materials commonly used in the penetrations and the insulation installed on the pressure vessel should be considered. Particulate debris generated by pipe rupture jets stripping off paint or coatings and eroding concrete at the point of impact should also be considered.	Potential debris sources, types, and characteristics are considered. Further and additional evaluation of long-term recirculation cooling is conducted in accordance with regulatory guidance considering plant specific information, and is the responsibility of any applicant that references the certified US-APWR design for construction and licensed operation.

Table 6.2.2-2 Comparison of RWSP Recirculation Intake Debris Strainer Design to RG 1.82 Requirements (Sheet 17 OF 21)

No.	Regulatory Position	US-APWR Design
1.3.3.1	The calculation of the debris quantities transported from debris sources to the sump screen should consider all modes of debris transport, including airborne debris transport, containment spray wash-down debris transport, and containment sump pool debris transport. Consideration of the containment pool debris transport should include, (1) debris transport during the fill-up phase, as well as during the recirculation phase, (2) the turbulence in the pool caused by the flow of water, water entering the pool from break overflow, and containment spray drainage, and (3) the buoyancy of the debris. Transport analyses of the debris should consider: (1) debris that would float along the pool surface, (2) debris that would remain suspended due to pool turbulence (e.g., individual fibers and fine particulates), and (3) debris that readily settles to the pool floor.	Debris quantity calculations consider appropriate transport modes and mechanisms for LOCA phases and conditions, consistent with NEI 04-07 guidance and recommendations. Further analysis and evaluation of phenomena affecting the RWSP performance to be conducted in accordance with regulatory guidance considering plant specific information, and is the responsibility of any applicant that references the certified US-APWR design for construction and licensed operation.
1.3.3.2	The debris transport analyses should consider each type of insulation (e.g., fibrous, calcium silicate, reflective metallic) and debris size (e.g., particulates, fibrous fine, large pieces of fibrous insulation). The analyses should also consider the potential for further decomposition of the debris as it is transported to the sump screen.	Further analysis of phenomena affecting RWSP performance for long-term recirculation cooling is conducted in accordance with regulatory guidance considering plant specific information, and is the responsibility of any applicant that references the certified US-APWR design for construction and licensed operation.
1.3.3.3	Bulk flow velocity from recirculation operations, LOCA-related hydrodynamic phenomena, and other hydrodynamic forces (e.g., local turbulence effects or pool mixing) should be considered for both debris transport and ECC sump screen velocity computations.	RWSP transport and suction strainer performance computations consider appropriate bulk flow velocities and other LOCA-related hydrodynamic phenomena and forces.

Table 6.2.2-2 Comparison of RWSP Recirculation Intake Debris Strainer Design to RG 1.82 Requirements (Sheet 18 OF 21)

No.	Regulatory Position	US-APWR Design
1.3.3.4	An acceptable analytical approach to predict debris transport within the sump pool is to use computational fluid dynamics (CFD) simulations in combination with the experimental debris transport data. Examples of this approach are provided in NUREG/CR-6772 and NUREG/CR-6773. Alternative methods for debris transport analyses are also acceptable, provided they are supported by adequate validation of analytical techniques using experimental data to ensure that the debris transport estimates are conservative with respect to the quantities and types of debris transported to the sump screen.	RWSP debris transport design analysis is performed by alternate methods, uses approved analytical techniques, and is the responsibility of any applicant that references the certified US-APWR design for construction and licensed operation.
1.3.3.5	Curbs can be credited for removing heavier debris that has been shown analytically or experimentally to travel by sliding along the containment floor and that cannot be lifted off the floor within the calculated water velocity range.	RWSP debris transport design analysis is performed by alternate method, uses approved analytical techniques, and is the responsibility of any applicant that references the certified US-APWR design for construction and licensed operation.
1.3.3.6	If transported to the sump pool, all debris (e.g., fine fibrous, particulates) that would remain suspended due to pool turbulence should be considered to reach the sump screen.	RWSP debris transport design analysis is performed by alternate methods, uses approved analytical techniques, and is the responsibility of any applicant that references the certified US-APWR design for construction and licensed operation.
1.3.3.7	The time to switch over to sump recirculation and the operation of containment spray should be considered in the evaluation of debris transport to the sump screen.	RWSP is the reliable and safety-related source of cooling water following a LOCA. This item does not apply to US-APWR design. (No suction “switch-over.”)

Table 6.2.2-2 Comparison of RWSP Recirculation Intake Debris Strainer Design to RG 1.82 Requirements (Sheet 19 OF 21)

No.	Regulatory Position	US-APWR Design
1.3.3.8	In lieu of performing airborne and containment spray wash-down debris transport analyses, it could be assumed that all debris will be transported to the sump pool. In lieu of performing sump pool debris transport analyses (Regulatory Position 3.3.4 above), it could be assumed that all debris entering the sump pool or originating in the sump will be considered transported to the sump screen when estimating screen debris bed head loss. If it is credible in a plant that all drains leading to the containment sump could become completely blocked, or an inventory holdup in the containment could happen together with debris loading on the sump screen, these situations could pose a worse impact on the recirculation sump performance than the assumed situations mentioned above. In this case, these situations should also be assessed.	Debris quantity calculations consider appropriate transport modes and mechanisms for LOCA phases and conditions, consistent with NEI 04-07 guidance and recommendations, and is the responsibility of any applicant that references the certified US-APWR design for construction and licensed operation. Multiple RWSP drain paths located around the containment and at differing heights ensure reliable water return to RWSP. Water holdup volume is accounted for in the minimum RWSP volume (607,500 gal), and suction strainers are of the latest design available. Thus, simultaneous blockages of debris interceptors and strainers are not deemed credible.
1.3.3.9	The effects of floating or buoyant debris on the integrity of the sump screen and on subsequent head loss should be considered. For screens that are not fully or are only shallowly submerged, floating debris could contribute to the debris bed head loss. The head loss due to floating or buoyant debris could be minimized by a design feature to keep buoyant debris from reaching the sump screen.	The four RWSP suction strainers are widely separated and fully submerged (approx. 4 ft. at minimum) as base-mounted on the RWSP floor, and are a low-flow design presenting approximately 2,150 ft^2 surface area.
1.3.4	**Debris Accumulation and Head Loss**	
1.3.4.1	ECC sump screen blockage should be evaluated based on the amount of debris estimated using assumptions and criteria of Regulatory Position 3.2 and on debris transported to the ECC sump (Regulatory Position 3.3.) The debris volume should be used to estimate the rate of accumulation of debris on the ECC sump screen.	Debris that reaches the RWSP suction strainer is considered to be clogging the strainer surface. A plant-specific strainer performance characteristics evaluation is provided by the COL applicant.

Table 6.2.2-2 Comparison of RWSP Recirculation Intake Debris Strainer Design to RG 1.82 Requirements (Sheet 20 OF 21)

No.	Regulatory Position	US-APWR Design
1.3.4.2	Consideration of ECC sump screen submergence (full or partial) at the time of switchover to ECCS should be given in calculating the available (wetted) screen area. For plants in which containment heat removal pumps take suction from the ECC sump before switchover to the ECCS, the available NPSH for these pumps should consider the submergence of the sump screens at the time these pumps initiate suction from the ECC sump. Unless otherwise shown analytically or experimentally, debris should be assumed to be uniformly distributed over the available sump screen surface. Debris mass should be calculated based on the amount of debris estimated to reach the ECC sump screen. (See Revision 1 of NUREG-0897, NUREG/CR-3616, and NUREG/CR-6224.)	US-APWR design does not require suction “switch over.” Suction strainers are submerged (approx. 4 ft. minimum) during a LOCA. Debris that reaches the strainer is considered to be uniformly distributed over and clogging the strainer surface. An NPSH evaluation of the CSS head loss is prepared by the COL applicant and the FSAR updated based on as-built information.
1.3.4.3	For fully submerged sump screens, the NPSH available to the ECC pumps should be determined using the conditions specified in the plant's licensing basis.	NPSH design analysis inputs are reconfirmed (adjusted if necessary) by the COL Applicant.
1.3.4.4	For partially submerged sumps, NPSH margin may not be the only failure criterion (see Appendix A). For partially submerged sumps, credit should only be given to the portion of the sump screen that is expected to be submerged, as a function of time. Pump failure should be assumed to occur when the head loss across the sump screen (including only the clean screen head loss and the debris bed head loss) is greater than one-half of the submerged screen height or NPSH margin.	Not applicable to US-APWR design. Suction strainers are submerged (approx. 4 ft., minimum) during a LOCA.
1.3.4.5	Estimates of head loss caused by debris blockage should be developed from empirical data based on the sump screen design (e.g., surface area and geometry), postulated combinations of debris (i.e., amount, size distribution, type), and approach velocity. Because the debris beds that form on sump screens can trap debris that would pass through an unobstructed sump screen opening, any head loss correlation should conservatively account for filtration of particulates by the debris bed, including particulates that would pass through an unobstructed sump screen.	Head loss estimates are consistent with NEI 04-07 guidance and recommendations. Information on sump screen performance for long-term cooling are developed. Debris estimates and assumptions is reconfirmed (adjusted if necessary) in the COL Application phase.

Table 6.2.2-2 Comparison of RWSP Recirculation Intake Debris Strainer Design to RG 1.82 Requirements (Sheet 21 of 21)

No.	Regulatory Position	US-APWR Design
1.3.4.6	Consistent with the requirements of 10CFR50.46, head loss should be calculated for the debris beds formed of different combinations of fibers and particulate mixtures (e.g., minimum uniform thin bed of fibers supporting a layer of particulate debris) based on assumptions and criteria described in Regulatory Positions 3.2 and 3.3.	Debris accumulation and characterization is reconfirmed (adjusted if necessary) in the COL Application phase.

Table 6.2.2-3 Failure Modes and Effects Analysis for CSS (Sheet 1 of 4)

Component	Failure Mode	Plant Condition	Effect on System Operation	Failure Detection Method
1.CS/RHR Pump A (B, C, and D analogous)	Failure to deliver flow	LOCA or MSLB (continuous spray required)	No effect on plant safety because three, 50% CS/RHR pumps are available and only 2 are required	CS/RHR pump operating information in the MCR includes flow, suction, and discharge pressure, pump motor current, and RUN indication for each pump
		Post-LOCA cooling of RWSP (containment spray no longer required)	No effect on plant safety because three, 50% CS/RHR pumps are available and only 2 are required	
	Failure to deliver flow, with one CS/RHR train out of service	LOCA or MSLB (continuous spray required)	No effect on plant safety because two, 50% CS/RHR trains are available and two are required	
		Post-LOCA cooling of RWSP (containment spray no longer required)	No effect on plant safety because two, 50% CS/RHR trains are available and two are required	

Table 6.2.2-3 Failure Modes and Effects Analysis for CSS (Sheet 2 of 4)

Component	Failure Mode	Plant Condition	Effect on System Operation	Failure Detection Method
2. Containment Spray Header, containment isolation valve CSS-MOV-004A (CSS-MOV-004B, C, and D analogous)	Failure to open on demand	LOCA or MSLB (continuous spray required)	No effect on plant safety because three isolation valves open for three, 50% CS/RHR pumps to supply (all four) spray rings. Only two open isolation valves (two, 50% capacity pumps) are required	Valve position indication MCR.
	Failure to close on demand	Post-LOCA cooling of RWSP (containment spray no longer required)	No effect on plant safety because three isolation valves close for three, 50% CS/RHR trains to cool the RWSP. Two CS/RHR trains are required	
	Failure to open on demand with one containment spray train out of service	LOCA or MSLB (continuous spray required)	No effect on plant safety because two isolation valves open for two, 50% CS/RHR pumps to supply (all four) spray rings and two are required	
	Failure to close on demand with one containment spray train out of service	Post-LOCA cooling of RWSP (containment spray no longer required)	No effect on plant safety because two isolation valves close for two, 50% CS/RHR trains to cool the RWSP. Two CS/RHR trains are required.	

Table 6.2.2-3 Failure Modes and Effects Analysis for CSS (Sheet 3 of 4)

Component	Failure Mode	Plant Condition	Effect on System Operation	Failure Detection Method
3. RHR discharge line containment isolation valve RHS-MOV-021A (RHS-MOV-021B, C and D analogous)	Failure to open on demand	Post-LOCA cooling of RWSP (containment spray no longer required)	No effect on plant safety because 3 other RHR containment isolation valves open for 3, 50% trains of RHR cooling. Only 2 trains required.	Valve position indication MCR.
	Failure to open on demand, with one RHR train out of service.		No effect on plant safety because 2 other RHR containment isolation valves open for 2, 50% trains of RHR cooling. Two trains required.	
4. CS/RHR pump full-flow test line stop valve RHS-MOV-025A (RHS-MOV-025B, C and D analogous)	Failure to open on demand	Post-LOCA cooling of RWSP (containment spray no longer required)	No effect on plant safety because 3 other CS/RHR full-flow test line stop valves open for 3, 50% trains of RHR cooling to RWSP. Only 2 trains required.	
	Failure to open on demand, with one CS/RHR train out of service		No effect on plant because 2 other safety CS/RHR full-flow test line stop valves open for RWSP cooling. Two trains are required.	

Table 6.2.2-3 Failure Modes and Effects Analysis for CSS (Sheet 4 of 4)

Component	Failure Mode	Plant Condition	Effect on System Operation	Failure Detection Method
5. I & C for CS initiation	Failure to deliver fluid due to loss of CSS initiation signal	LOCA or MSLB (continuous spray required) Post-LOCA cooling of RWSP (CS no longer required)	Same as item 1	Same as item 1
	Failure to deliver fluid due to loss of CSS initiation signal with one SI train out of service.			
6 Class 1E ac power source	Failure to deliver fluid due to loss of ac power.	LOCA or MSLB (continuous spray required) Post-LOCA cooling of RWSP (CS no longer required)	Same as item 1	
	Failure to deliver fluid due to loss of ac power with one SI train out of service.			

Table 6.2.4-1 Design Information Regarding Provisions for Isolating Containment Penetrations

Isolation Valve Design	Description
Valve Types	Isolation valves may be gate, globe, butterfly, diaphragm, check (simple check valves are acceptable only inside the containment), plug, and relief valves, depending upon the fluid system requirements.
Valve Leakage	The objective shall be to limit valve leakage to as low as reasonably achievable. The basic requirement for total valve leakage shall be to meet the acceptance criterion for Type C tests on 10CFR50, Appendix J (Ref. 6.2-28). The criterion requires that, on testing, the combined leakage rate for all penetrations and valves shall be less than 0.60 of the maximum allowable containment leakage rate.
Valve Operability Design and Qualification	American National Standard Self-Operated and Power-Operated Safety Related Valves Functional Specification Standard, N278.1-1995, has been issued and provides guidance on valve operability requirements for penetration of purchaser's specification for isolation valves.
Relief Valves	Relief valves can be used as isolation valves if their actuation pressures are 1.5 times greater than the containment design pressure.
Isolation Valve Seal Systems	The bypass leakage rates through the containment boundaries (isolation barriers) shall be limited to as low as reasonably achievable. (ANS-56.2/ANSI-N271-1976, Section 4.11)

Table 6.2.4-2 Associated Containment Isolation Configurations

System	Description	Isolation Configuration (Figure 6.2.4-1)	Closed System Outside Containment	Protected From Missiles	Seismic Category and Equipment Class	Temperature / Pressure Rating at least equal to Containment	Remarks
GDC 55							
RHRS	Hot Leg CS/RHR Pump Suction Line	Sheet 12	Yes	Yes	I, 2	Yes	Inboard isolation valve locked closed
GDC 56							
SIS	SI Pump Suction Line	Sheet 11	Yes	Yes	I, 2	Yes	Remote Manual Motor Operated Valve
CSS	RWSP CS/RHR Pump Suction Line	Sheet 18	Yes	Yes	I, 2	Yes	Remote Manual Motor Operated Valve
CSS	Containment Pressure Instrument Line	Sheet 17	Yes	Yes	I, 2	Yes	Sensor is of sealed bellows type and protective case surrounds sensor and instrument
LTS	Local Pressure Indicator pressure detection line	Sheet 47	No	No	I, 2	Yes	Blank flanged on both Inboard and outboard portion of line
N/A	Oil Supply and Drain Line for RCP Motor	Sheet 48	No	No	I, 2	Yes	Blank flanged on both Inboard and outboard portion of line
N/A	Personnel Airlock	Sheet 49	No	No	I, 2	Yes	Containment pressure aids in seating both Inboard and outboard flanged portions of airlock
N/A	Equipment Hatch	Sheet 50	No	No	I, 2	Yes	Containment pressure aids in seating hatch flange

Table 6.2.4-3 List of Containment Penetrations and System Isolation Positions (Sheet 1 of 8)

Pen NO.	GDC	System Name	Fluid	Line Size (in.)	ESF or Support System	Valve Arragmt Figure 6.2.4-1	Valve Number	Location of Valve	Type Tests	Type C Test	Length of Pipe (Note 1)	Valve Type	Valve Operator	Actuation Mode Primary	Actuation Mode Secondary	Valve Position Normal	Valve Position Shutdown	Valve Position Post-Accident	Power Failure	Actuation Signal	Valve Closure Time	Power Source (Note 2)
P247	56	RCS	Nitrogen Gas	1	No	Sht. 2	RCS-VLV-133	In	C	Y	-	Check	Self	Auto	None	-	-	-	NA	NA	NA	NA
				1			RCS-AOV-132	Out			6.5 ft	Dia	Air	Auto	RM	O	C	C	FC	T	15	1E
				3/4			RCS-VLV-167	In			-	Dia	Manual	Manual	None	C	C	C	NA	NA	NA	NA
P260	56	RCS	Demi. Water	3	No	Sht. 3	RCS-VLV-139	In	C	Y	-	Check	Self	Auto	None	-	-	-	NA	NA	NA	NA
				3			RCS-VLV-140	In			-	Dia	Manual	Manual	None	C	C	C	NA	NA	NA	NA
				3			RCS-AOV-138	Out			6.5 ft	Globe	Air	Auto	RM	O	C	C	FC	T	15	1E
				3/4			RCS-VLV-171	In			-	Dia	Manual	Manual	None	C	C	C	NA	NA	NA	NA
P276L	56	RCS	Nitrogen Gas	3/4	No	Sht. 4	RCS-AOV-147	In	C	Y	-	Globe	Air	Auto	RM	O	C	C	FC	T	15	1E
				3/4			RCS-AOV-148	Out			7.5 ft	Globe	Air	Auto	RM	C	C	C	FC	T	15	1E
P277	55	CVCS	Primary Coolant	4	No	Sht. 5	CVS-AOV-005	In	C	Y	-	Globe	Air	Auto	RM	O	O	C	FC	T	20	1E
				4			CVS-AOV-006	Out			13.0 ft	Globe	Air	Auto	RM	O	O	C	FC	T	20	1E
P278	55	CVCS	Primary Coolant	4	No	Sht. 6	CVS-VLV-153	In	C	Y	-	Check	Self	Auto	None	-	-	-	NA	NA	NA	NA
				4			CVS-MOV-152	Out			13.0 ft	Gate	Motor	Auto	RM	O	O	C	FAI	S	20	1E
				3/4			CVS-VLV-653	In			-	Globe	Manual	Manual	None	C	C	C	NA	NA	NA	NA
P279	56	CVCS	Primary Coolant	1 1/2	No	Sht. 7	CVS-VLV-179B	In	C	Y	-	Check	Self	Auto	None	-	-	-	NA	NA	NA	NA
				1 1/2			CVS-MOV-178B	Out			13.0 ft	Globe	Motor	RM	Manual	O	O	O	FAI	RM	15	1E
				3/4			CVS-VLV-667B	In			-	Globe	Manual	Manual	None	C	C	C	NA	NA	NA	NA
P280	56	CVCS	Primary Coolant	1 1/2	No	Sht. 7	CVS-VLV-179D	In	C	Y	-	Check	Self	Auto	None	-	-	-	NA	NA	NA	NA
				1 1/2			CVS-MOV-178D	Out			13.0 ft	Globe	Motor	RM	Manual	O	O	O	FAI	RM	15	1E
				3/4			CVS-VLV-667D	In			-	Globe	Manual	Manual	None	C	C	C	NA	NA	NA	NA
P281	56	CVCS	Primary Coolant	1 1/2	No	Sht. 7	CVS-VLV-179A	In	C	Y	-	Check	Self	Auto	None	-	-	-	NA	NA	NA	NA
				1 1/2			CVS-MOV-178A	Out			13.0 ft	Globe	Motor	RM	Manual	O	O	O	FAI	RM	15	1E
				3/4			CVS-VLV-667A	In			-	Globe	Manual	Manual	None	C	C	C	NA	NA	NA	NA
P282	56	CVCS	Primary Coolant	1 1/2	No	Sht. 7	CVS-VLV-179C	In	C	Y	-	Check	Self	Auto	None	-	-	-	NA	NA	NA	NA
				1 1/2			CVS-MOV-178C	Out			13.0 ft	Globe	Motor	RM	Manual	O	O	O	FAI	RM	15	1E
				3/4			CVS-VLV-667C	In			-	Globe	Manual	Manual	None	C	C	C	NA	NA	NA	NA
P283	55	CVCS	Primary Coolant	3	No	Sht. 8	CVS-MOV-203	In	C	Y	-	Globe	Motor	Auto	RM	O	O	C	FAI	P,T+UV	15	1E
				3			CVS-MOV-204	Out			7.0 ft	Globe	Motor	Auto	RM	O	O	C	FAI	P,T+UV	15	1E
				3/4			CVS-VLV-202	In			-	Check	Self	Auto	None	-	-	-	NA	NA	NA	NA
P236	56	SIS	Nitrogen Gas	1	No	Sht. 9	SIS-VLV-115	In	C	Y	-	Check	Self	Auto	None	-	-	-	NA	NA	NA	NA
				1			SIS-VLV-114	Out			6.5 ft	Globe	Manual	Manual	None	C	C	C	NA	NA	NA	NA
				3/4			SIS-VLV-156	In			-	Globe	Manual	Manual	None	C	C	C	NA	NA	NA	NA
P210	55	SIS	Borated Water	4	Yes	Sht. 10	SIS-VLV-010A	In	C	Y	-	Check	Self	Auto	None	-	-	-	NA	NA	NA	NA
				4			SIS-MOV-009A	Out			7.0 ft	Gate	Motor	RM	Manual	O	O	O	FAI	RM	20	1E
				3/4			SIS-VLV-058A	In			-	Globe	Manual	Manual	None	C	C	C	NA	NA	NA	NA
P227	55	SIS	Borated Water	4	Yes	Sht. 10	SIS-VLV-010B	In	C	Y	-	Check	Self	Auto	None	-	-	-	NA	NA	NA	NA
				4			SIS-MOV-009B	Out			7.0 ft	Gate	Motor	RM	Manual	O	O	O	FAI	RM	20	1E
				3/4			SIS-VLV-058B	In			-	Globe	Manual	Manual	None	C	C	C	NA	NA	NA	NA
P258	55	SIS	Borated Water	4	Yes	Sht. 10	SIS-VLV-010C	In	C	Y	-	Check	Self	Auto	None	-	-	-	NA	NA	NA	NA
				4			SIS-MOV-009C	Out			7.0 ft	Gate	Motor	RM	Manual	O	O	O	FAI	RM	20	1E
				3/4			SIS-VLV-058C	In			-	Globe	Manual	Manual	None	C	C	C	NA	NA	NA	NA

Table 6.2.4-3 List of Containment Penetrations and System Isolation Positions (Sheet 2 of 8)

Pen NO.	GDC	System Name	Fluid	Line Size (in.)	ESF or Support System	Valve Arragmt Figure 6.2.4-1	Valve Number	Location of Valve	Type Tests	Type C Test	Length of Pipe (Note 1)	Valve Type	Valve Operator	Actuation Mode Primary	Actuation Mode Secondary	Valve Position Normal	Valve Position Shutdown	Valve Position Post-Accident	Power Failure	Actuation Signal	Valve Closure Time	Power Source (Note 2)
P274	55	SIS	Borated Water	4	Yes	Sht. 10	SIS-VLV-010D	In	C	Y	-	Check	Self	Auto	None	-	-	-	NA	NA	NA	NA
				4			SIS-MOV-009D	Out			7.0 ft	Gate	Motor	RM	Manual	O	O	O	FAI	RM	20	1E
				3/4			SIS-VLV-058D	In			-	Globe	Manual	Manual	None	C	C	C	NA	NA	NA	NA
P152	56	SIS	Borated Water	10	Yes	Sht. 11	SIS-MOV-001A	Out	A	N	37.5 ft	Gate	Motor	RM	Manual	O	O	O	FAI	RM	50	1E
P153	56	SIS	Borated Water	10	Yes	Sht. 11	SIS-MOV-001B	Out	A	N	37.5 ft	Gate	Motor	RM	Manual	O	O	O	FAI	RM	50	1E
P156	56	SIS	Borated Water	10	Yes	Sht. 11	SIS-MOV-001C	Out	A	N	37.5 ft	Gate	Motor	RM	Manual	O	O	O	FAI	RM	50	1E
P157	56	SIS	Borated Water	10	Yes	Sht. 11	SIS-MOV-001D	Out	A	N	37.5 ft	Gate	Motor	RM	Manual	O	O	O	FAI	RM	50	1E
P209	55	RHRS	Borated Water	10	No	Sht. 12	RHS-MOV-002A	In	A	N	-	Gate	Motor	RM	Manual	C	O	C	FAI	RM	50	1E
				6			RHS-VLV-003A	In			-	Relief	Self	Auto	None	C	C	C	NA	NA	NA	NA
				3/4			SIS-VLV-225A	In			-	Globe	Manual	Manual	None	C	C	C	NA	NA	NA	NA
P226	55	RHRS	Borated Water	10	No	Sht. 12	RHS-MOV-002B	In	A	N	-	Gate	Motor	RM	Manual	C	O	C	FAI	RM	50	1E
				6			RHS-VLV-003B	In			-	Relief	Self	Auto	None	C	C	C	NA	NA	NA	NA
				3/4			SIS-VLV-225B	In			-	Globe	Manual	Manual	None	C	C	C	NA	NA	NA	NA
P257	55	RHRS	Borated Water	10	No	Sht. 12	RHS-MOV-002C	In	A	N	-	Gate	Motor	RM	Manual	C	O	C	FAI	RM	50	1E
				6			RHS-VLV-003C	In			-	Relief	Self	Auto	None	C	C	C	NA	NA	NA	NA
				3/4			SIS-VLV-225C	In			-	Globe	Manual	Manual	None	C	C	C	NA	NA	NA	NA
P273	55	RHRS	Borated Water	10	No	Sht. 12	RHS-MOV-002D	In	A	N	-	Gate	Motor	RM	Manual	C	O	C	FAI	RM	50	1E
				6			RHS-VLV-003D	In			-	Relief	Self	Auto	None	C	C	C	NA	NA	NA	NA
				3/4			SIS-VLV-225D	In			-	Globe	Manual	Manual	None	C	C	C	NA	NA	NA	NA
P212	55	RHRS	Borated Water	8	Yes	Sht. 13	RHS-VLV-022A	In	C	Y	-	Check	Self	Auto	None	-	-	-	NA	NA	NA	NA
				8			RHS-MOV-021A	Out			7.0 ft	Gate	Motor	RM	Manual	C	O	O	FAI	RM	40	1E
				3/4			RHS-VLV-062A	In			-	Globe	Manual	Manual	None	C	C	C	NA	NA	NA	NA
P225	55	RHRS	Borated Water	8	Yes	Sht. 13	RHS-VLV-022B	In	C	Y	-	Check	Self	Auto	None	-	-	-	NA	NA	NA	NA
				8			RHS-MOV-021B	Out			7.0 ft	Gate	Motor	RM	Manual	C	O	O	FAI	RM	40	1E
				3/4			RHS-VLV-062B	In			-	Globe	Manual	Manual	None	C	C	C	NA	NA	NA	NA
P259	55	RHRS	Borated Water	8	Yes	Sht. 13	RHS-VLV-022C	In	C	Y	-	Check	Self	Auto	None	-	-	-	NA	NA	NA	NA
				8			RHS-MOV-021C	Out			7.0 ft	Gate	Motor	RM	Manual	C	O	O	FAI	RM	40	1E
				3/4			RHS-VLV-062C	In			-	Globe	Manual	Manual	None	C	C	C	NA	NA	NA	NA
P272	55	RHRS	Borated Water	8	Yes	Sht. 13	RHS-VLV-022D	In	C	Y	-	Check	Self	Auto	None	-	-	-	NA	NA	NA	NA
				8			RHS-MOV-021D	Out			7.0 ft	Gate	Motor	RM	Manual	C	O	O	FAI	RM	40	1E
				3/4			RHS-VLV-062D	In			-	Globe	Manual	Manual	None	C	C	C	NA	NA	NA	NA
P501	57	FWS	Secondary Coolant	16	Yes	Sht. 14	NFS-VLV-512A	Out	A	N	35.0 ft	Gate	P/H	Auto	RM	O	O	C	FC	S,RCPS	5	1E
				3			EFS-MOV-019A	Out			-	Gate	Motor	Auto	RM	O	O	O	FAI	RCPS	15	1E
P502	57	FWS	Secondary Coolant	16	Yes	Sht. 14	NFS-VLV-512B	Out	A	N	32.0 ft	Gate	P/H	Auto	RM	O	O	C	FC	S,RCPS	5	1E
				3			EFS-MOV-019B	Out			-	Gate	Motor	Auto	RM	O	O	O	FAI	RCPS	15	1E
P503	57	FWS	Secondary Coolant	16	Yes	Sht. 14	NFS-VLV-512C	Out	A	N	32.0 ft	Gate	P/H	Auto	RM	O	O	C	FC	S,RCPS	5	1E
				3			EFS-MOV-019C	Out			-	Gate	Motor	Auto	RM	O	O	O	FAI	RCPS	15	1E
P504	57	FWS	Secondary Coolant	16	Yes	Sht. 14	NFS-VLV-512D	Out	A	N	35.0 ft	Gate	P/H	Auto	RM	O	O	C	FC	S,RCPS	5	1E
				3			EFS-MOV-019D	Out			-	Gate	Motor	Auto	RM	O	O	O	FAI	RCPS	15	1E

Table 6.2.4-3 List of Containment Penetrations and System Isolation Positions (Sheet 3 of 8)

Pen NO.	GDC	System Name	Fluid	Line Size (in.)	ESF or Support System	Valve Arragmt Figure 6.2.4-1	Valve Number	Location of Valve	Type Tests	Type C Test	Length of Pipe (Note 1)	Valve Type	Valve Operator	Actuation Mode Primary	Actuation Mode Secondary	Valve Position Normal	Valve Position Shutdown	Valve Position Post-Accident	Power Failure	Actuation Signal	Valve Closure Time	Power Source (Note 2)
P509	57	MSS	Secondary Coolant	32	Yes	Sht. 15	NMS-AOV-515A	Out	A	N	65.5 ft	Check	Air	Auto	RM	O	C	C	FC	RCPS	5	1E
				6			NMS-MOV-507A	Out			-	Gate	Motor	RM	Manual	O	O	O	FAI	RM	30	1E
				6			EFS-MOV-101A	Out			-	Gate	Motor	RM	Manual	O	O	O	FAI	RM	30	1E
				6			NMS-VLV-509A	Out			-	Relief	Self	Auto	None	C	C	C	NA	NA	NA	NA
				6			NMS-VLV-510A	Out			-	Relief	Self	Auto	None	C	C	C	NA	NA	NA	NA
				6			NMS-VLV-511A	Out			-	Relief	Self	Auto	None	C	C	C	NA	NA	NA	NA
				6			NMS-VLV-512A	Out			-	Relief	Self	Auto	None	C	C	C	NA	NA	NA	NA
				6			NMS-VLV-513A	Out			-	Relief	Self	Auto	None	C	C	C	NA	NA	NA	NA
				6			NMS-VLV-514A	Out			-	Relief	Self	Auto	None	C	C	C	NA	NA	NA	NA
				4			NMS-HCV-3615	Out			-	Globe	Air	Auto	RM	C	C	C	FC	RCPS	20	1E
				2			NMS-MOV-701A	Out			-	Globe	Motor	RM	Manual	O	O	O	FAI	RM	15	1E
				3/4			NMS-VLV-533A	Out			-	Globe	Manual	Manual	None	C	C	C	NA	NA	NA	NA
P510	57	MSS	Secondary Coolant	32	Yes	Sht. 15	NMS-AOV-515B	Out	A	N	62.5 ft	Check	Air	Auto	RM	O	C	C	FC	RCPS	5	1E
				6			NMS-MOV-507B	Out			-	Gate	Motor	RM	Manual	O	O	O	FAI	RM	30	1E
				6			EFS-MOV-101B	Out			-	Gate	Motor	RM	Manual	O	O	O	FAI	RM	30	1E
				6			NMS-VLV-509B	Out			-	Relief	Self	Auto	None	C	C	C	NA	NA	NA	NA
				6			NMS-VLV-510B	Out			-	Relief	Self	Auto	None	C	C	C	NA	NA	NA	NA
				6			NMS-VLV-511B	Out			-	Relief	Self	Auto	None	C	C	C	NA	NA	NA	NA
				6			NMS-VLV-512B	Out			-	Relief	Self	Auto	None	C	C	C	NA	NA	NA	NA
				6			NMS-VLV-513B	Out			-	Relief	Self	Auto	None	C	C	C	NA	NA	NA	NA
				6			NMS-VLV-514B	Out			-	Relief	Self	Auto	None	C	C	C	NA	NA	NA	NA
				4			NMS-HCV-3625	Out			-	Globe	Air	Auto	RM	C	C	C	FC	RCPS	20	1E
				2			NMS-MOV-701B	Out			-	Globe	Motor	RM	Manual	O	O	O	FAI	RM	15	1E
				3/4			NMS-VLV-533B	Out			-	Globe	Manual	Manual	None	C	C	C	NA	NA	NA	NA
P511	57	MSS	Secondary Coolant	32	Yes	Sht. 15	NMS-AOV-515C	Out	A	N	62.5 ft	Check	Air	Auto	RM	O	C	C	FC	RCPS	5	1E
				6			NMS-MOV-507C	Out			-	Gate	Motor	RM	Manual	O	O	O	FAI	RM	30	1E
				6			EFS-MOV-101C	Out			-	Gate	Motor	RM	Manual	O	O	O	FAI	RM	30	1E
				6			NMS-VLV-509C	Out			-	Relief	Self	Auto	None	C	C	C	NA	NA	NA	NA
				6			NMS-VLV-510C	Out			-	Relief	Self	Auto	None	C	C	C	NA	NA	NA	NA
				6			NMS-VLV-511C	Out			-	Relief	Self	Auto	None	C	C	C	NA	NA	NA	NA
				6			NMS-VLV-512C	Out			-	Relief	Self	Auto	None	C	C	C	NA	NA	NA	NA
				6			NMS-VLV-513C	Out			-	Relief	Self	Auto	None	C	C	C	NA	NA	NA	NA
				6			NMS-VLV-514C	Out			-	Relief	Self	Auto	None	C	C	C	NA	NA	NA	NA
				4			NMS-HCV-3635	Out			-	Globe	Air	Auto	RM	C	C	C	FC	RCPS	20	1E
				2			NMS-MOV-701C	Out			-	Globe	Motor	RM	Manual	O	O	O	FAI	RM	15	1E
				3/4			NMS-VLV-533C	Out			-	Globe	Manual	Manual	None	C	C	C	NA	NA	NA	NA

Table 6.2.4-3 List of Containment Penetrations and System Isolation Positions (Sheet 4 of 8)

Pen NO.	GDC	System Name	Fluid	Line Size (in.)	ESF or Support System	Valve Arragmt Figure 6.2.4-1	Valve Number	Location of Valve	Type Tests	C Type Test	Length of Pipe (Note 1)	Valve Type	Valve Operator	Actuation Mode Primary	Actuation Mode Secondary	Valve Position Normal	Valve Position Shutdown	Valve Position Post-Accident	Power Failure	Actuation Signal	Valve Closure Time	Power Source (Note 2)
P512	57	MSS	Secondary Coolant	32	Yes	Sht. 15	NMS-AOV-515D	Out	A	N	65.5 ft	Check	Air	Auto	RM	O	C	C	FC	RCPS	5	1E
				6			NMS-MOV-507D	Out			-	Gate	Motor	RM	Manual	O	O	O	FAI	RM	30	1E
				6			EFS-MOV-101D	Out			-	Gate	Motor	RM	Manual	O	O	O	FAI	RM	30	1E
				6			NMS-VLV-509D	Out			-	Relief	Self	Auto	None	C	C	C	NA	NA	NA	NA
				6			NMS-VLV-510D	Out			-	Relief	Self	Auto	None	C	C	C	NA	NA	NA	NA
				6			NMS-VLV-511D	Out			-	Relief	Self	Auto	None	C	C	C	NA	NA	NA	NA
				6			NMS-VLV-512D	Out			-	Relief	Self	Auto	None	C	C	C	NA	NA	NA	NA
				6			NMS-VLV-513D	Out			-	Relief	Self	Auto	None	C	C	C	NA	NA	NA	NA
				6			NMS-VLV-514D	Out			-	Relief	Self	Auto	None	C	C	C	NA	NA	NA	NA
				4			NMS-HCV-3645	Out			-	Globe	Air	Auto	RM	C	C	C	FC	RCPS	20	1E
				2			NMS-MOV-701D	Out			-	Globe	Motor	RM	Manual	O	O	O	FAI	RM	15	1E
				3/4			NMS-VLV-533D	Out			-	Globe	Manual	Manual	None	C	C	C	NA	NA	NA	NA
P214	56	CSS	Borated Water	8	Yes	Sht. 16	CSS-VLV-005A	In	C	Y	-	Check	Self	Auto	None	-	-	-	NA	NA	NA	NA
				8			CSS-MOV-004A	Out			7.0 ft	Gate	Motor	Auto	RM	C	C	O	FAI	P	NA	1E
				3/4			CSS-VLV-023A	In			-	Globe	Manual	Manual	None	C	C	C	NA	NA	NA	NA
P224	56	CSS	Borated Water	8	Yes	Sht. 16	CSS-VLV-005B	In	C	Y	-	Check	Self	Auto	None	-	-	-	NA	NA	NA	NA
				8			CSS-MOV-004B	Out			7.0 ft	Gate	Motor	Auto	RM	C	C	O	FAI	P	NA	1E
				3/4			CSS-VLV-023B	In			-	Globe	Manual	Manual	None	C	C	C	NA	NA	NA	NA
P261	56	CSS	Borated Water	8	Yes	Sht. 16	CSS-VLV-005C	In	C	Y	-	Check	Self	Auto	None	-	-	-	NA	NA	NA	NA
				8			CSS-MOV-004C	Out			7.0 ft	Gate	Motor	Auto	RM	C	C	O	FAI	P	NA	1E
				3/4			CSS-VLV-023C	In			-	Globe	Manual	Manual	None	C	C	C	NA	NA	NA	NA
P271	56	CSS	Borated Water	8	Yes	Sht. 16	CSS-VLV-005D	In	C	Y	-	Check	Self	Auto	None	-	-	-	NA	NA	NA	NA
				8			CSS-MOV-004D	Out			7.0 ft	Gate	Motor	Auto	RM	C	C	O	FAI	P	NA	1E
				3/4			CSS-VLV-023D	In			-	Globe	Manual	Manual	None	C	C	C	NA	NA	NA	NA
P151	56	CSS	Borated Water	14	Yes	Sht. 18	CSS-MOV-001A	Out	A	N	37.5 ft	Gate	Motor	RM	Manual	O	C	O	FAI	RM	60	1E
P154	56	CSS	Borated Water	14	Yes	Sht. 18	CSS-MOV-001B	Out	A	N	37.5 ft	Gate	Motor	RM	Manual	O	C	O	FAI	RM	60	1E
P155	56	CSS	Borated Water	14	Yes	Sht. 18	CSS-MOV-001C	Out	A	N	37.5 ft	Gate	Motor	RM	Manual	O	C	O	FAI	RM	60	1E
P158	56	CSS	Borated Water	14	Yes	Sht. 18	CSS-MOV-001D	Out	A	N	37.5 ft	Gate	Motor	RM	Manual	O	C	O	FAI	RM	60	1E
P220	56	CSS	Silicone Oil	3/4	Yes	Sht. 17	-	-	A	N	-	-	-	-	-	-	-	-	-	-	-	-
P222	56	CSS	Silicone Oil	3/4	Yes	Sht. 17	-	-	A	N	-	-	-	-	-	-	-	-	-	-	-	-
P416	56	CSS	Silicone Oil	3/4	Yes	Sht. 17	-	-	A	N	-	-	-	-	-	-	-	-	-	-	-	-
P417	56	CSS	Silicone Oil	3/4	Yes	Sht. 17	-	-	A	N	-	-	-	-	-	-	-	-	-	-	-	-
P405 L	56	CSS	Silicone Oil	3/4	No	Sht. 17	-	-	A	N	-	-	-	-	-	-	-	-	-	-	-	-
P234	55	CCWS	Water with corrosion inhibitor	8	Yes	Sht. 19	NCS-VLV-403A	In	C	Y	-	Check	Self	Auto	None	-	-	-	NA	NA	NA	NA
				8			NCS-MOV-402A	Out			7.0 ft	Gate	Motor	Auto	RM	O	O	C	FAI	P	40	1E
				4			NCS-MOV-445A	Out				Globe	Motor	Manual	None	C	C	O	FAI	NA	20	1E
				3/4			NCS-VLV-452A	In			-	Globe	Manual	Manual	None	C	C	C	NA	NA	NA	NA
P249	55	CCWS	Water with corrosion inhibitor	8	Yes	Sht. 19	NCS-VLV-403B	In	C	Y	-	Check	Self	Auto	None	-	-	-	NA	NA	NA	NA
				8			NCS-MOV-402B	Out			7.0 ft	Gate	Motor	Auto	RM	O	O	C	FAI	P	40	1E
				4			NCS-MOV-445B	Out				Globe	Motor	Manual	None	C	C	O	FAI	NAI	20	1E
				3/4			NCS-VLV-452B	In			-	Globe	Manual	Manual	None	C	C	C	NA	NA	NA	NA

Table 6.2.4-3 List of Containment Penetrations and System Isolation Positions (Sheet 5 of 8)

Pen NO.	GDC	System Name	Fluid	Line Size (in.)	ESF or Support System	Valve Arragmt Figure 6.2.4-1	Valve Number	Location of Valve	Type Tests	Type C Test	Length of Pipe (Note 1)	Valve Type	Valve Operator	Actuation Mode Primary	Actuation Mode Secondary	Valve Position Normal	Valve Position Shutdown	Valve Position Post-Accident	Power Failure	Actuation Signal	Valve Closure Time	Power Source (Note 2)
P232	55	CCWS	Water with corrosion inhibitor	8	Yes	Sht. 20	NCS-MOV-436A	In	C	Y	-	Gate	Motor	Auto	RM	O	O	C	FAI	P	40	1E
				8			NCS-MOV-438A	Out			7.0 ft	Gate	Motor	Auto	RM	O	O	C	FAI	P	40	1E
				4			NCS-MOV-447A	In				Globe	Motor	Manual	None	C	C	O	FAI	NA	20	1E
				4			NCS-MOV-448A	Out				Globe	Motor	Manual	None	C	C	O	FAI	NA	20	1E
				3/4			NCS-VLV-437A	In			-	Check	Self	Auto	None	-	-	-	NA	NA	NA	NA
P251	55	CCWS	Water with corrosion inhibitor	8	Yes	Sht. 20	NCS-MOV-436B	In	C	Y	-	Gate	Motor	Auto	RM	O	O	C	FAI	P	40	1E
				8			NCS-MOV-438B	Out			7.0 ft	Gate	Motor	Auto	RM	O	O	C	FAI	P	40	1E
				4			NCS-MOV-447B	In			-	Globe	Motor	Manual	None	C	C	O	FAI	NA	20	1E
				4			NCS-MOV-448B	Out			-	Globe	Motor	Manual	None	C	C	O	FAI	NA	20	1E
				3/4			NCS-VLV-437B	In			-	Check	Self	Auto	None	-	-	-	NA	NA	NA	NA
P233	57	CCWS	Water with corrosion inhibitor	4	No	Sht. 21	NCS-AOV-511	Out	A	N	6.5 ft	Globe	Air	Auto	RM	O	O	C	FC	T	20	1E
P235	57	CCWS		4	No	Sht. 21	NCS-AOV-517	Out	A	N	6.5 ft	Globe	Air	Auto	RM	O	O	C	FC	T	20	1E
P252	57	CCWS		8	No	Sht. 22	NCS-MOV-531	Out	A	N	7.0 ft	Gate	Motor	Auto	RM	O	O	C	FAI	T	40	1E
P250	57	CCWS		8	No	Sht. 22	NCS-MOV-537	Out	A	N	7.0 ft	Gate	Motor	Auto	RM	O	O	C	FAI	T	40	1E
P276R	56	WMS	Gas	3/4	No	Sht. 23	LMS-AOV-052	In	C	Y	-	Dia	Air	Auto	RM	O	O	C	FC	T	15	1E
				3/4			LMS-AOV-053	Out			9.5 ft	Dia	AIr	Auto	RM	C	C	C	FC	T	15	1E
P284	56	WMS	Gas	2	No	Sht. 24	LMS-AOV-055	In	C	Y	-	Dia	Air	Auto	RM	O	O	C	FC	T	15	1E
				2			LMS-AOV-056	Out			13.5 ft	Dia	Air	Auto	RM	O	O	C	FC	T	15	1E
				2			LMS-AOV-060	Out			-	Dia	AIr	Auto	RM	O	O	C	FC	T	15	1E
P205	56	WMS	Borated Water	3	No	Sht. 25	LMS-LCV-1000A	In	C	Y	-	Dia	Air	Auto	RM	C	C	C	FC	T	15	1E
				3			LMS-LCV-1000B	Out			6.5 ft	Dia	Air	Auto	RM	O	O	C	FC	T	15	1E
P207	56	WMS	Primary Coolant	2	No	Sht. 26	LMS-AOV-104	In	C	Y	-	Dia	Air	Auto	RM	C	C	C	FC	T	15	1E
				2			LMS-AOV-105	Out			6.5 ft	Dia	Air	Auto	RM	C	C	C	FC	T	15	1E
P267L	55	PSS	Primary Coolant	3/4	No	Sht. 27	PSS-AOV-003	In	C	Y	-	Globe	Air	Auto	RM	C	C	C	FC	T	15	1E
				3/4			PSS-MOV-006	In			-	Globe	Motor	Auto	RM	O	O	C	FAI	T	15	1E
				3/4			PSS-MOV-013	In			-	Globe	Motor	Auto	RM	C	C	C	FAI	T	15	1E
				3/4			PSS-MOV-031A	Out			10.5 ft	Globe	Motor	Auto	RM	O	O	C	FAI	T	15	1E
P269R	55	PSS	Primary Coolant	3/4	No	Sht. 28	PSS-MOV-023	In	C	Y	-	Globe	Motor	Auto	RM	O	O	C	FAI	T	15	1E
				3/4			PSS-MOV-031B	Out			10.0 ft	Globe	Motor	Auto	RM	O	O	C	FAI	T	15	1E
P267R	56	PSS	Borated Water	3/4	No	Sht. 29	PSS-AOV-062A	In	C	Y	-	Globe	Air	Auto	RM	C	C	C	FC	T	15	1E
				3/4			PSS-AOV-062B	In			-	Globe	Air	Auto	RM	C	C	C	FC	T	15	1E
				3/4			PSS-AOV-062C	In			-	Globe	Air	Auto	RM	C	C	C	FC	T	15	1E
				3/4			PSS-AOV-062D	In			-	Globe	Air	Auto	RM	C	C	C	FC	T	15	1E
				3/4			PSS-AOV-063	Out			9.5 ft	Globe	Air	Auto	RM	O	O	C	FC	T	15	1E
P270	56	PSS	Containment Atmosphere	3/4	No	Sht. 30	PSS-VLV-072	In	C	Y	-	Check	Self	Auto	None	-	-	-	NA	NA	NA	NA
				3/4			PSS-VLV-091	In			-	Globe	Manual	Manual	None	C	C	C	NA	NA	NA	NA
				3/4			PSS-MOV-071	Out			7.0 ft	Globe	Motor	RM	Manual	C	C	C	FAI	RM	15	1E
P237R	57	SGBDS	Secondary Coolant	3/4	No	Sht. 31	SGS-AOV-031A	Out	A	N	10.0 ft	Globe	Air	Auto	RM	O	O	C	FC	T	15	1E
P237L	57	SGBDS		3/4	No	Sht. 31	SGS-AOV-031B	Out	A	N	10.5 ft	Globe	Air	Auto	RM	O	O	C	FC	T	15	1E

Table 6.2.4-3 List of Containment Penetrations and System Isolation Positions (Sheet 6 of 8)

Pen NO.	GDC	System Name	Fluid	Line Size (in.)	ESF or Support System	Valve Arragmt Figure 6.2.4-1	Valve Number	Location of Valve	Type Tests	Type C Test	Length of Pipe (Note 1)	Valve Type	Valve Operator	Actuation Mode Primary	Actuation Mode Secondary	Valve Position Normal	Valve Position Shutdown	Valve Position Post-Accident	Power Failure	Actuation Signal	Valve Closure Time	Power Source (Note 2)
P239R	57	SGBDS	Secondary Coolant	3/4	No	Sht. 31	SGS-AOV-031C	Out	A	N	9.0 ft	Globe	Air	Auto	RM	O	O	C	FC	T	15	1E
P239L	57	SGBDS		3/4	No	Sht. 31	SGS-AOV-031D	Out	A	N	9.5 ft	Globe	Air	Auto	RM	O	O	C	FC	T	15	1E
P505	57	SGBDS	Secondary Coolant	4	No	Sht. 31	SGS-AOV-001A	Out	A	N	20.0 ft	Globe	Air	Auto	RM	O	O	C	FC	T	20	1E
P506	57	SGBDS		4	No	Sht. 31	SGS-AOV-001B	Out	A	N	23.5 ft	Globe	Air	Auto	RM	O	O	C	FC	T	20	1E
P507	57	SGBDS		4	No	Sht. 31	SGS-AOV-001C	Out	A	N	23.5 ft	Globe	Air	Auto	RM	O	O	C	FC	T	20	1E
P508	57	SGBDS		4	No	Sht. 31	SGS-AOV-001D	Out	A	N	20.0 ft	Globe	Air	Auto	RM	O	O	C	FC	T	20	1E
P161	56	RWS	Borated Water	6	No	Sht. 32	RWS-MOV-002	In	C	Y	-	Gate	Motor	Auto	RM	O	O	C	FAI	T	30	1E
				6			RWS-MOV-004	Out			16.5 ft	Gate	Motor	Auto	RM	O	O	C	FAI	T	30	1E
				3/4			RWS-VLV-003	In			-	Check	Self	Auto	None	-	-	-	NA	NA	NA	NA
P162	56	RWS	Borated Water	4	No	Sht. 33	RWS-VLV-023	In	C	Y	-	Check	Self	Auto	None	-	-	-	NA	NA	NA	NA
				4			RWS-AOV-022	Out			28.5 ft	Dia	Air	Auto	RM	O	O	C	FC	T	20	1E
				3/4			RWS-VLV-073	In			-	Globe	Manual	Manual	None	C	C	C	NA	NA	NA	NA
P253	56	PMWS	Deminrralized Water	2	No	Sht. 34	DWS-VLV-005	In	C	Y	-	Check	Self	Auto	None	-	-	-	NA	NA	NA	NA
				2			DWS-VLV-004	Out			6.5 ft	Dia	Manual	Manual	None	C	C	C	NA	NA	NA	NA
				3/4			DWS-VLV-006	In			-	Dia	Manual	Manual	None	C	C	C	NA	NA	NA	NA
P245	56	IAS	Compressed Air	2	No	Sht. 35	CAS-VLV-003	In	C	Y	-	Check	Self	Auto	None	-	-	-	NA	NA	NA	NA
				2			CAS-MOV-002	Out			7.0 ft	Globe	Motor	Auto	RM	O	O	C	FAI	P	15	1E
				3/4			CAS-VLV-004	In			-	Globe	Manual	Manual	None	O	O	C	NA	NA	NA	NA
P248	56	FSS	Fire Water	3	No	Sht. 36	FSS-VLV-003	In	C	Y	-	Check	Self	Auto	None	-	-	-	NA	NA	NA	NA
				3			FSS-AOV-001	Out			6.5 ft	Globe	Air	Auto	RM	C	C	C	FC	T	15	1E
				3/4			FSS-VLV-002	In			-	Globe	Manual	Manual	None	C	C	C	NA	NA	NA	NA
P238	56	FSS	Fire Water	6	No	Sht. 37	FSS-VLV-006	In	C	Y	-	Check	Self	Auto	None	-	-	-	NA	NA	NA	NA
				6			FSS-MOV-004	Out			7.0 ft	Gate	Motor	Auto	RM	C	C	C	FAI	RM	30	1E
				3/4			FSS-VLV-005	In			-	Globe	Manual	Manual	None	C	C	C	NA	NA	NA	NA
P230	56	SSAS	Compressed Air	2	No	Sht. 38	CAS-VLV-103	In	C	Y	-	Check	Self	Auto	None	-	-	-	NA	NA	NA	NA
				2			CAS-VLV-101	Out			6.5 ft	Globe	Manual	Manual	None	C	C	C	NA	NA	NA	NA
				3/4			CAS-VLV-102	In			-	Globe	Manual	Manual	None	C	C	C	NA	NA	NA	NA
P200	-	-	(Fuel Transfer Tube)	22	No	Sht. 39	-	-	B	N	-	Flange	NA	-	-	C	C	C	NA	NA	NA	NA
P451	56	HVAC	Containment Atmosphere	36	No	Sht. 40	VCS-AOV-305	In	C	Y	-	B-fly	Air	Auto	RM	C	O	C	FC	V	5	1E
				36			VCS-AOV-304	Out			11.0 ft	B-fly	Air	Auto	RM	C	O	C	FC	V	5	1E
P452	56	HVAC	Containment Atmosphere	36	No	Sht. 40	VCS-AOV-306	In	C	Y	-	B-fly	Air	Auto	RM	C	O	C	FC	V	5	1E
				36			VCS-AOV-307	Out			7.0 ft	B-fly	Air	Auto	RM	C	O	C	FC	V	5	1E
P410	56	HVAC	Containment Atmosphere	8	No	Sht. 41	VCS-AOV-356	In	C	Y	-	B-fly	Air	Auto	RM	C	C	C	FC	V	5	1E
				8			VCS-AOV-357	Out			7.0 ft	B-fly	Air	Auto	RM	C	C	C	FC	V	5	1E
P401	56	HVAC	Containment Atmosphere	8	No	Sht. 41	VCS-AOV-355	In	C	Y	-	B-fly	Air	Auto	RM	C	C	C	FC	V	5	1E
				8			VCS-AOV-354	Out			7.0 ft	B-fly	Air	Auto	RM	C	C	C	FC	V	5	1E
P262R	56	HVAC	Silicone Oil	3/4	No	Sht. 42	-	-	A	N		-	-	-		-	-	-	-	-	-	-
P262L	56	HVAC	Silicone Oil	3/4	No	Sht. 42	-	-	A	N		-	-	-		-	-	-	-	-	-	-

Table 6.2.4-3 List of Containment Penetrations and System Isolation Positions (Sheet 7 of 8)

Pen NO.	GDC	System Name	Fluid	Line Size (in.)	ESF or Support System	Valve Arragmt Figure 6.2.4-1	Valve Number	Location of Valve	Type Tests	Type C Test	Length of Pipe (Note 1)	Valve		Actuation Mode		Valve Position			Power Failure	Actuation Signal	Valve Closure Time	Power Source (Note 2)
												Type	Operator	Primary	Secondary	Normal	Shutdown	Post-Accident				
P408	57	VWS	Chilled Water	10	No	Sht. 43	VWS-MOV-403	Out	A	N	6.5 ft	Gate	Motor	Auto	RM	O	C	C	FAI	T	60	1E
P409	57	VWS	Chilled Water	10	No	Sht. 43	VWS-MOV-407	Out	A	N	6.5 ft	Gate	Motor	Auto	RM	O	C	C	FAI	T	60	1E
P265	56	RMS	Containment	1	No	Sht. 44	RMS-VLV-005	In	C	Y	-	Check	Self	Auto	None	-	-	-	NA	NA	NA	NA
			Atmosphere	1			RMS-MOV-003	Out			6.5 ft	Globe	Motor	Auto	RM	O	O	C	FAI	T	15	1E
				3/4			RMS-VLV-004	in			-	Globe	Manual	Manual	None	C	C	C	NA	NA	NA	NA
P266	56	RMS	Containment	1	No	Sht. 44	RMS-MOV-001	In	C	Y	-	Globe	Motor	Auto	RM	O	O	C	FAI	T	15	1E
			Atmosphere	1			RMS-MOV-002	Out			6.5 ft	Globe	Motor	Auto	RM	O	O	C	FAI	T	15	1E
P231	56	ICIGS	Carbon	3/4	No	Sht. 45	IGS-AOV-002	In	C	Y	-	Dia	Air	Auto	RM	C	C	C	FC	T	15	1E
			Dioxide	3/4			IGS-AOV-001	Out			6.5 ft	Dia	Air	Auto	RM	C	C	C	FC	T	15	1E
P405R	56	LTS	Containment	3/4	No	Sht. 47	LTS-VLV-002	In	C	Y	-	Globe	Manual	Manual	None	C	C	C	NA	NA	NA	NA
			Atmosphere				LTS-VLV-001	Out			6.5 ft	Globe	Manual	Manual	None	C	C	C	NA	NA	NA	NA
P223	56	LTS	Containment	3/4	No	Sht. 47	-	In	B	N	-	Flange	NA	Manual	None	C	C	C	NA	NA	NA	NA
			Atmosphere				-	Out			-	Flange	NA	Manual	None	C	C	C	NA	NA	NA	NA
P216	56	LTS	Containment	3/4	No	Sht. 46	-	In	B	N	-	Flange	NA	Manual	None	C	C	C	NA	NA	NA	NA
			Atmosphere				-	Out			-	Flange	NA	Manual	None	C	C	C	NA	NA	NA	NA
P218	56	LTS	Containment	3/4	No	Sht. 46	-	In	B	N	-	Flange	NA	Manual	None	C	C	C	NA	NA	NA	NA
			Atmosphere				-	Out			-	Flange	NA	Manual	None	C	C	C	NA	NA	NA	NA
P418R	56	RLS	Containment	1 1/2	No	Sht. 48	-	In	B	N	-	Flange	NA	Manual	None	C	C	C	NA	NA	NA	NA
			Atmosphere				-	Out			-	Flange	NA	Manual	None	C	C	C	NA	NA	NA	NA
P418L	56	RLS	Containment	1 1/2	No	Sht. 48	-	In	B	N	-	Flange	NA	Manual	None	C	C	C	NA	NA	NA	NA
			Atmosphere				-	Out			-	Flange	NA	Manual	None	C	C	C	NA	NA	NA	NA
P520	56	-	-	-	-	Sht. 49	-	NA	B	N	-	None	None	Manual	Manual	C	C	C	NA	NA	NA	NA
P530	56	-	-	-	-	Sht. 49	-	NA	B	N	-	None	None	Manual	Manual	C	C	C	NA	NA	NA	NA
P540	56	-	-	-	-	Sht. 50	-	NA	B	N	-	None	None	Manual	Manual	C	C	C	NA	NA	NA	NA
P208	-	(Spare)	-	-	-	-	-	-	-		-	-	-	-	-	-	-	-	-	-	-	-
P213	-	(Spare)	-	-	-	-	-	-	-		-	-	-	-	-	-	-	-	-	-	-	-
P215	-	(Spare)	-	-	-	-	-	-	-		-	-	-	-	-	-	-	-	-	-	-	-
P246	-	(Spare)	-	-	-	-	-	-	-		-	-	-	-	-	-	-	-	-	-	-	-
P254	-	(Spare)	-	-	-	-	-	-	-		-	-	-	-	-	-	-	-	-	-	-	-
P268	-	(Spare)	-	-	-	-	-	-	-		-	-	-	-	-	-	-	-	-	-	-	-
P269L	-	(Spare)	-	-	-	-	-	-	-		-	-	-	-	-	-	-	-	-	-	-	-
P275	-	(Spare)	-	-	-	-	-	-	-		-	-	-	-	-	-	-	-	-	-	-	-
P285	-	(Spare)	-	-	-	-	-	-	-		-	-	-	-	-	-	-	-	-	-	-	-
P301	-	(Spare)	-	-	-	-	-	-	-		-	-	-	-	-	-	-	-	-	-	-	-
P406	-	(Spare)	-	-	-	-	-	-	-		-	-	-	-	-	-	-	-	-	-	-	-
P407	-	(Spare)	-	-	-	-	-	-	-		-	-	-	-	-	-	-	-	-	-	-	-
P419	-	(Spare)	-	-	-	-	-	-	-		-	-	-	-	-	-	-	-	-	-	-	-
P420	-	(Spare)	-	-	-	-	-	-	-		-	-	-	-	-	-	-	-	-	-	-	-

Table 6.2.4-3 List of Containment Penetrations and System Isolation Positions (Sheet 8 of 8)

Note 1 - The value is the length of pipe from containment to outermost isolation valve (or the maximum length that is not be exceeded in further design)

Note 2 - Inside and Outside valves are different Class-1E power source trains

Note 3 - The following is a list of abbreviations:

GDC	General Design Criteria
RG	Regulatory Guides
Dia	diaphram
B-fly	butterfly
O	open
C	close
LC	Locked closed
FC	Fail Closed
RM	Remote Manual
P/H	Pneumatic hydraulic
T	Containment Vessel Isolation Signal (Same as S signal)
P	Containment Vessel Isolation Signal (Same as CV spray signal)
S	Safety Injection Signal
V	Containment Ventilation Isolation Signal
FAI	Fail as is
RCPS	Reactor Control and Protection System signal
Self	actuated by the fluid pressure
NA	not applicable
LTS	Leak rate testing system
RLS	RCP motor oil collection system

Note 4 - As built pipe run distances from outer containment isolation valve to the containment penetration are provided by the COL applicant

Table 6.2.5-1 Containment Hydrogen Monitoring and Control Design Parameters

Parameter	Value
I. Hydrogen Detector	
Number	1
Range (% hydrogen)	0-20
II. Hydrogen Igniter	
Number	20
Type	Glow Plug

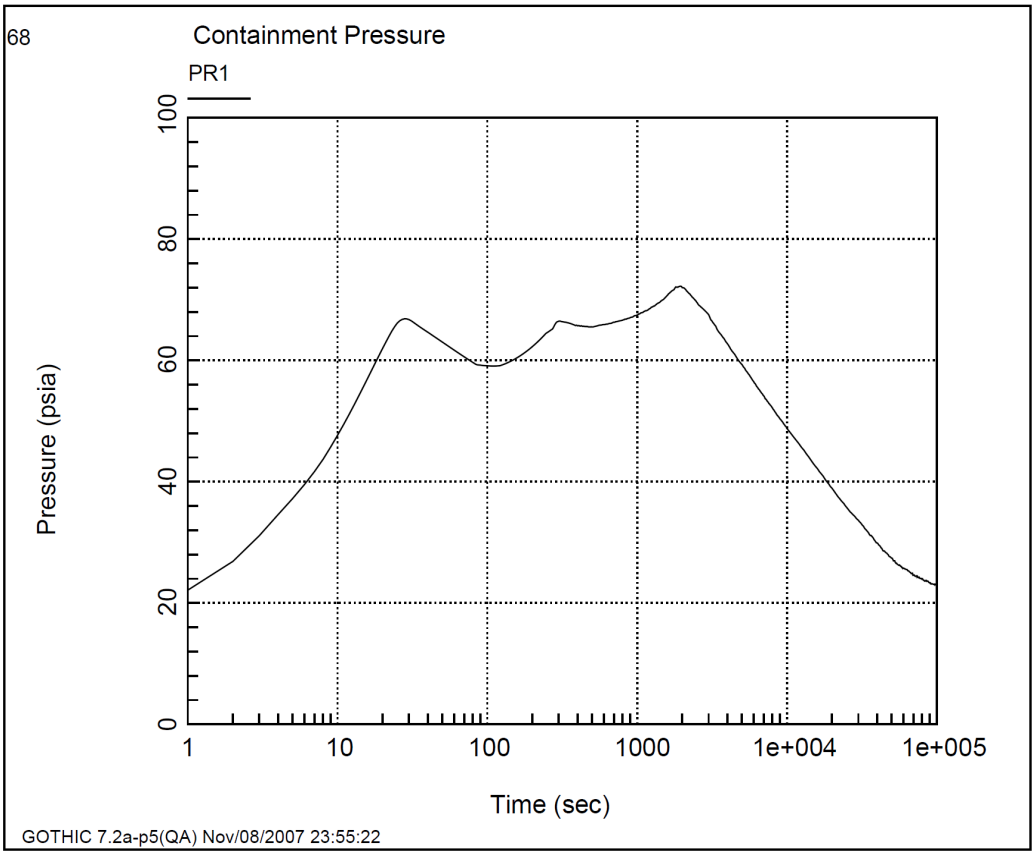

Figure 6.2.1-1 Calculated Internal Containment Pressure vs. Time for the Most Severe RCS Postulated Piping Failure

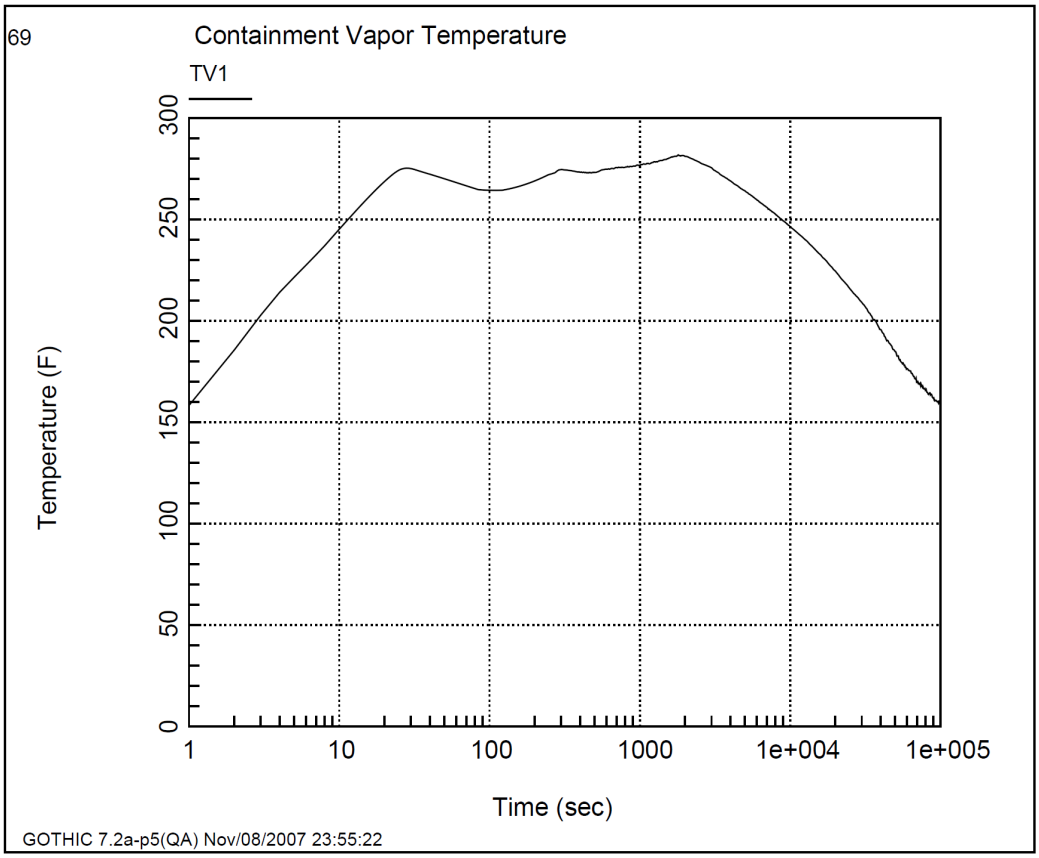

Figure 6.2.1-2 Calculated Internal Containment Temperature vs. Time for the Most Severe RCS Postulated Piping Failure

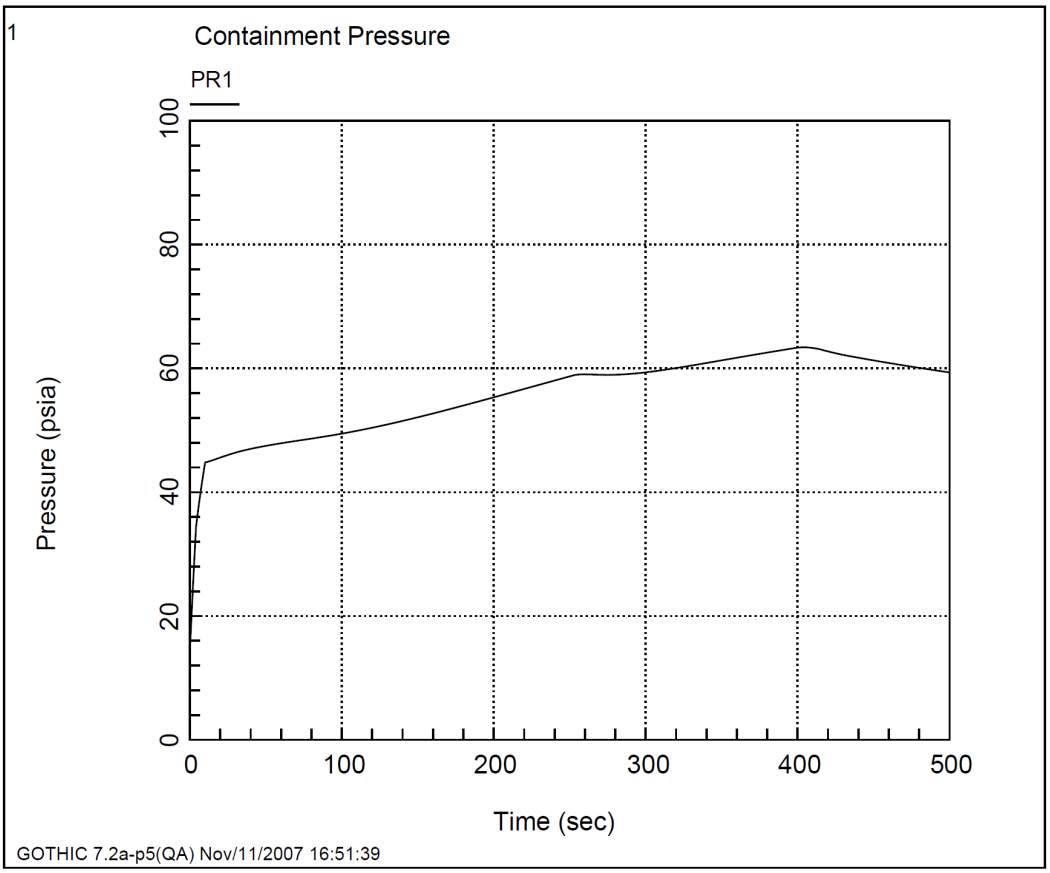

Figure 6.2.1-3 Calculated Internal Containment Pressure vs. Time for the Most Severe Secondary Steam System Postulated Piping Failure

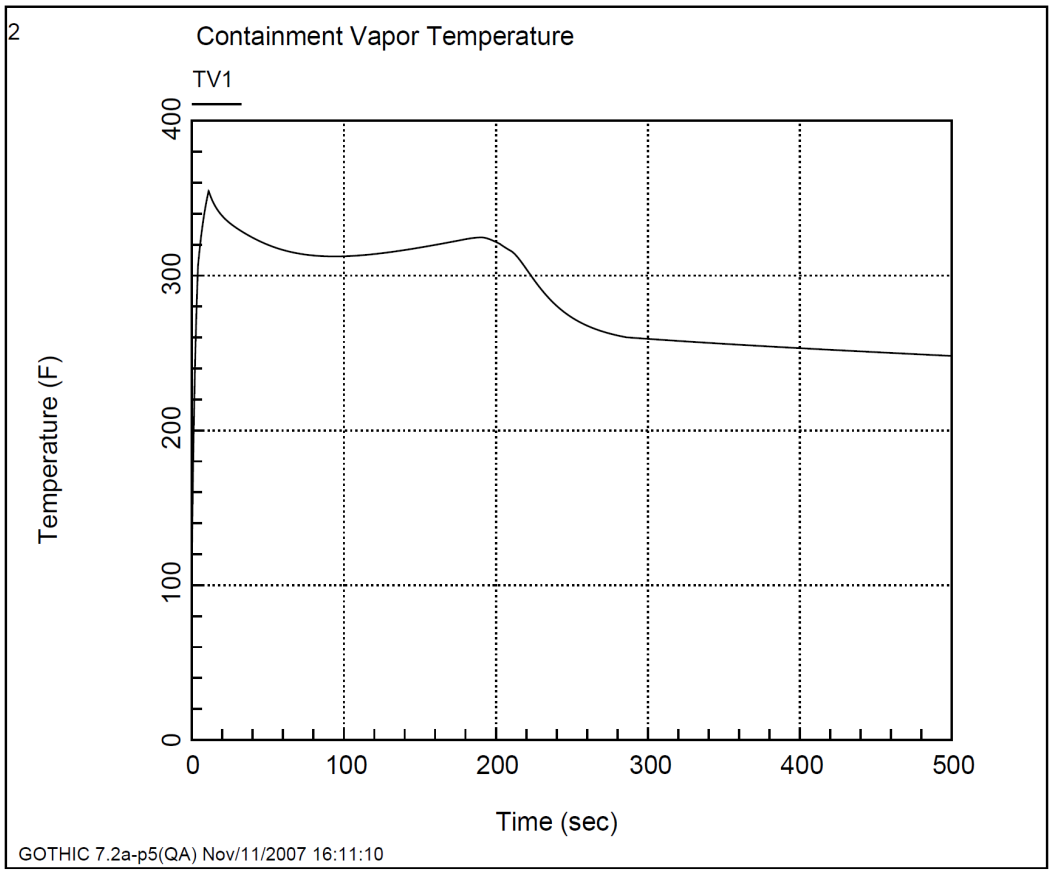

Figure 6.2.1-4 Calculated Internal Containment Temperature vs. Time for the Most Severe Secondary Steam System Postulated Piping Failure

Figure Redacted
Official Use Only
Security Related Information

Figure 6.2.1-5 Containment Sectional View

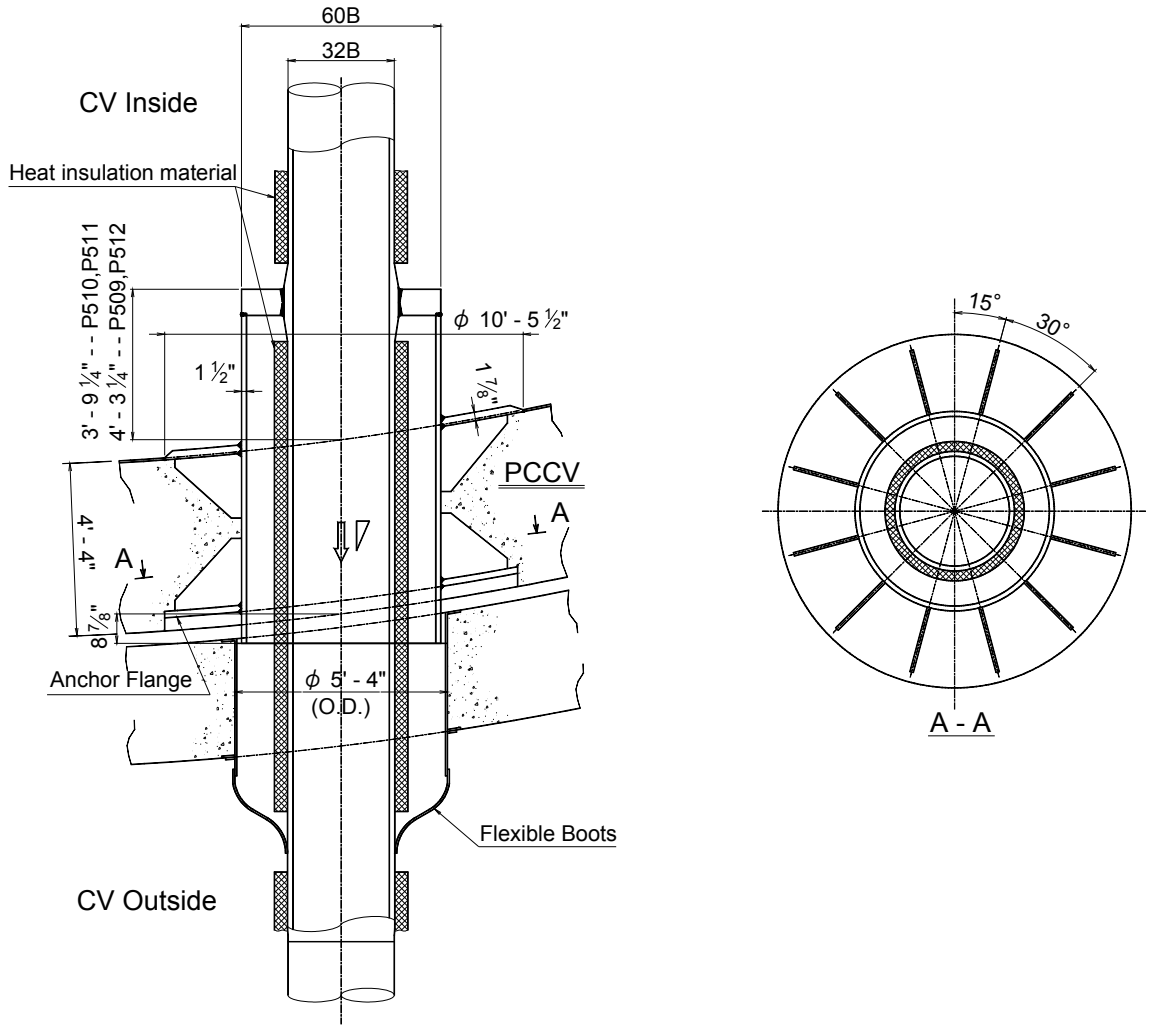

Figure 6.2.1-6 Main Steam Line Penetrations

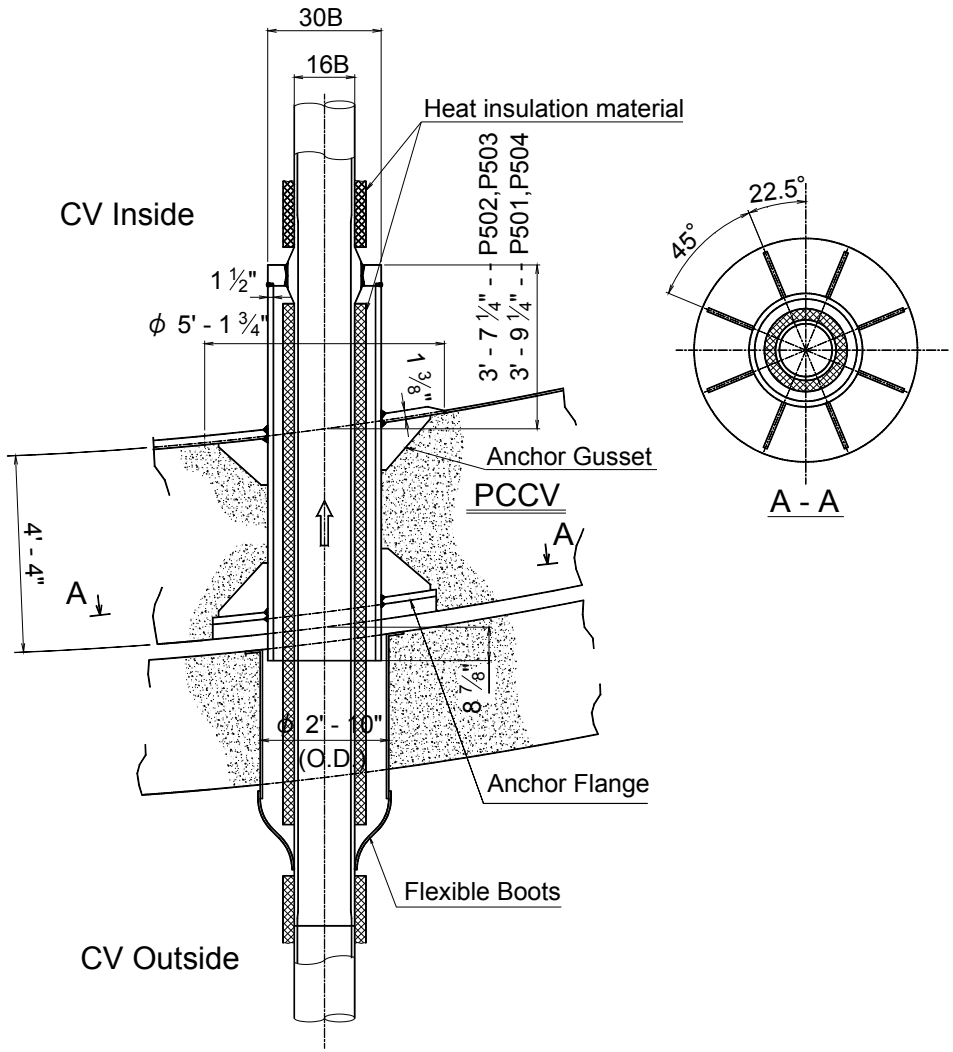

Figure 6.2.1-7 Feedwater Line Penetrations

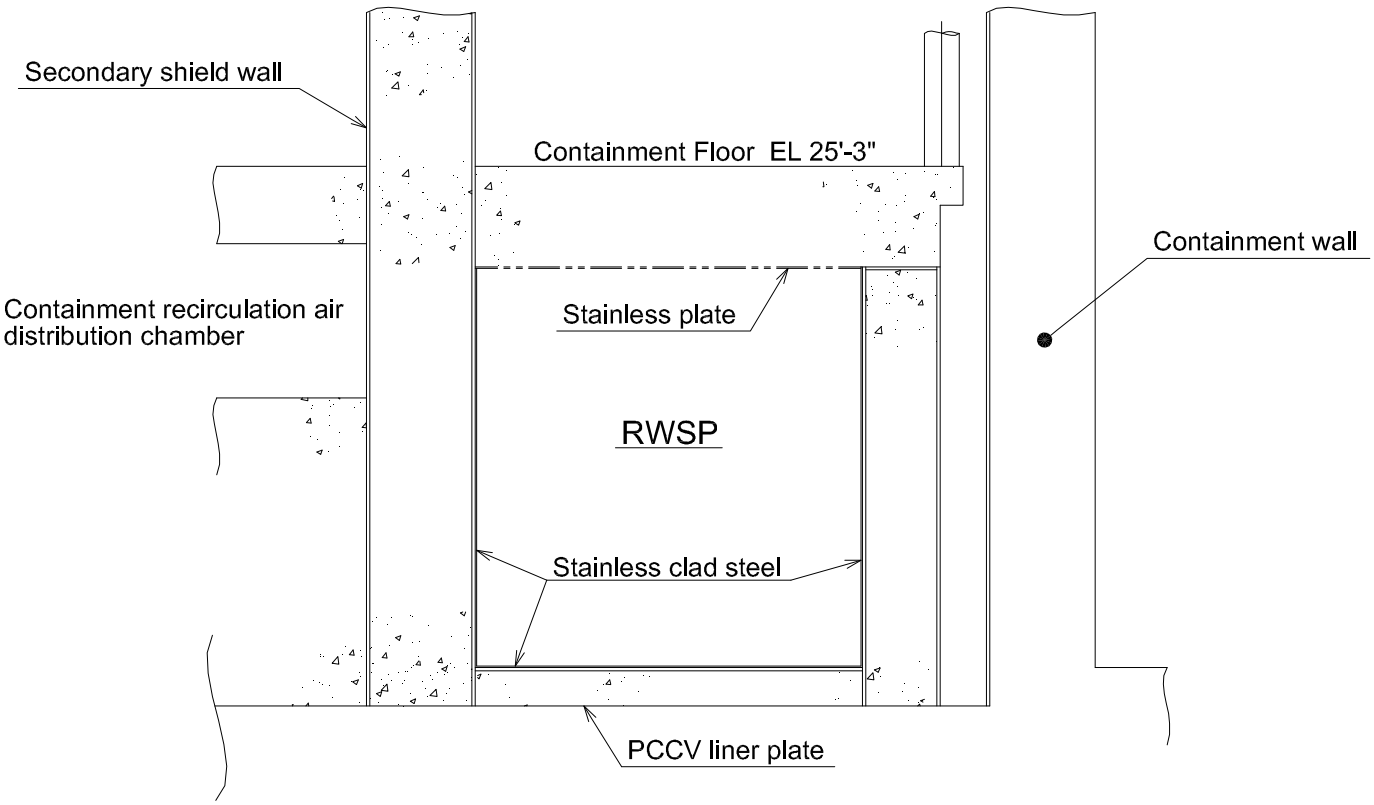

Figure 6.2.1-8 RWSP Concrete Structure Partial Sectional View

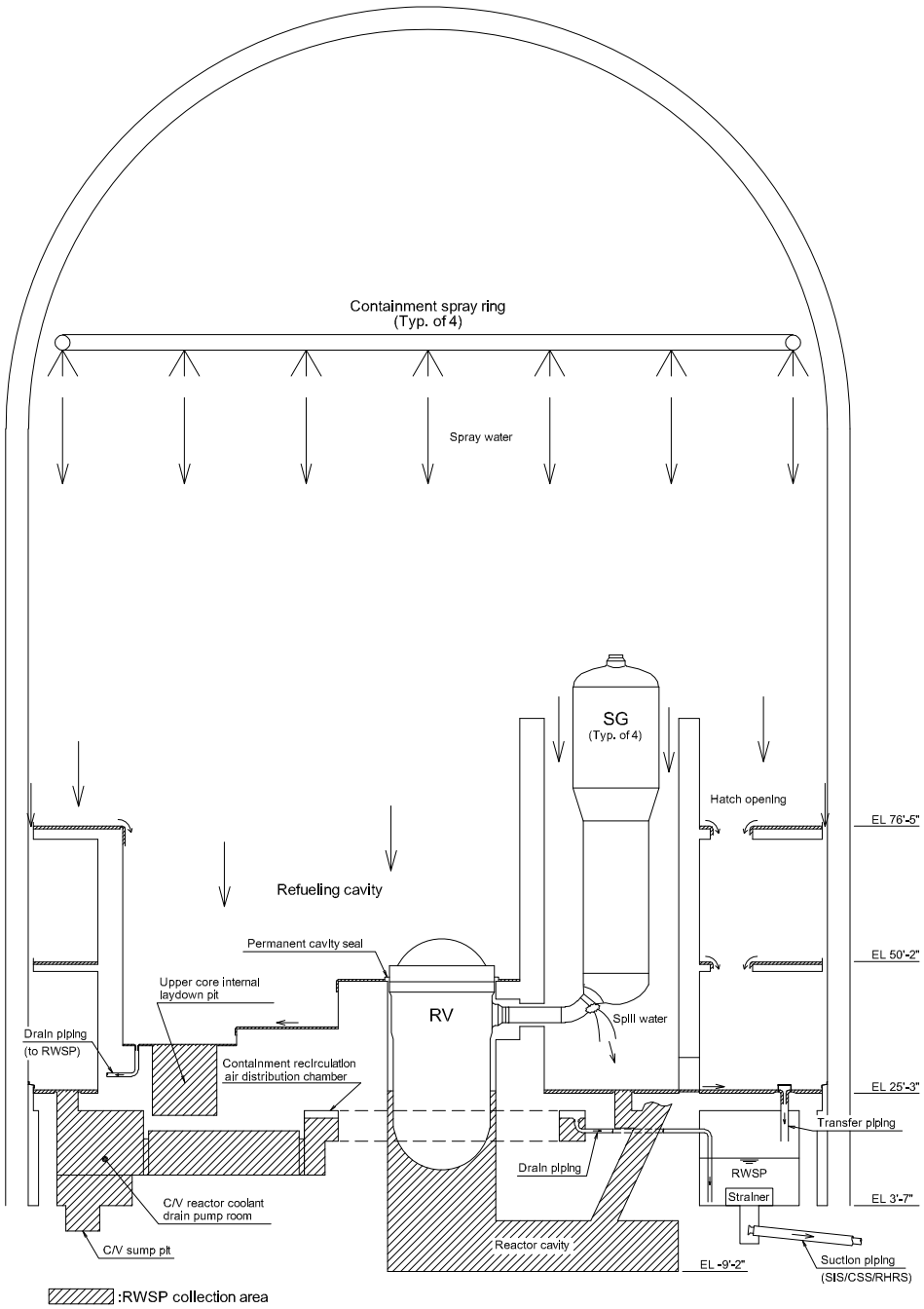

Figure 6.2.1-9 Outline of Paths that Solutions from the ECCS and CSS would follow in the Containment to the RWSP

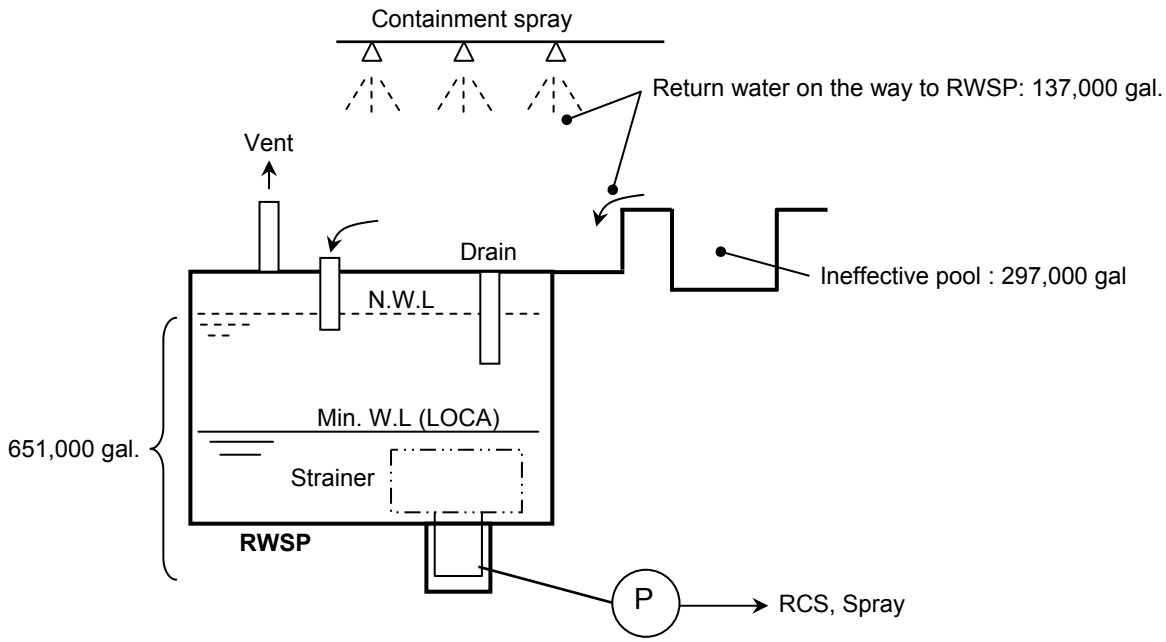

Figure 6.2.1-10 Volume of Ineffective Water

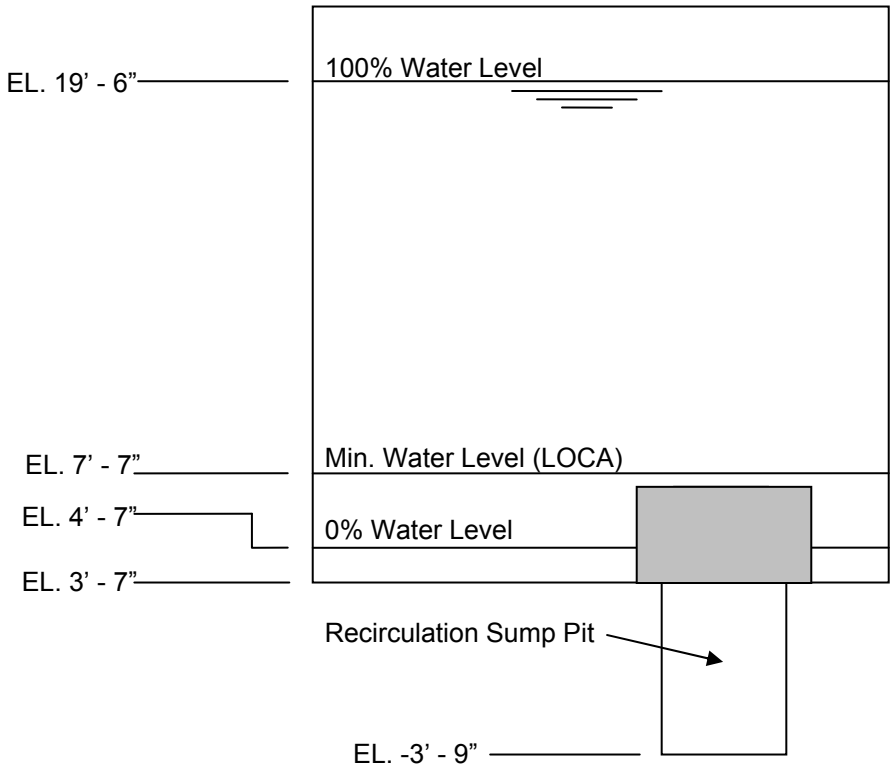

Figure 6.2.1-11 RWSP Water Levels

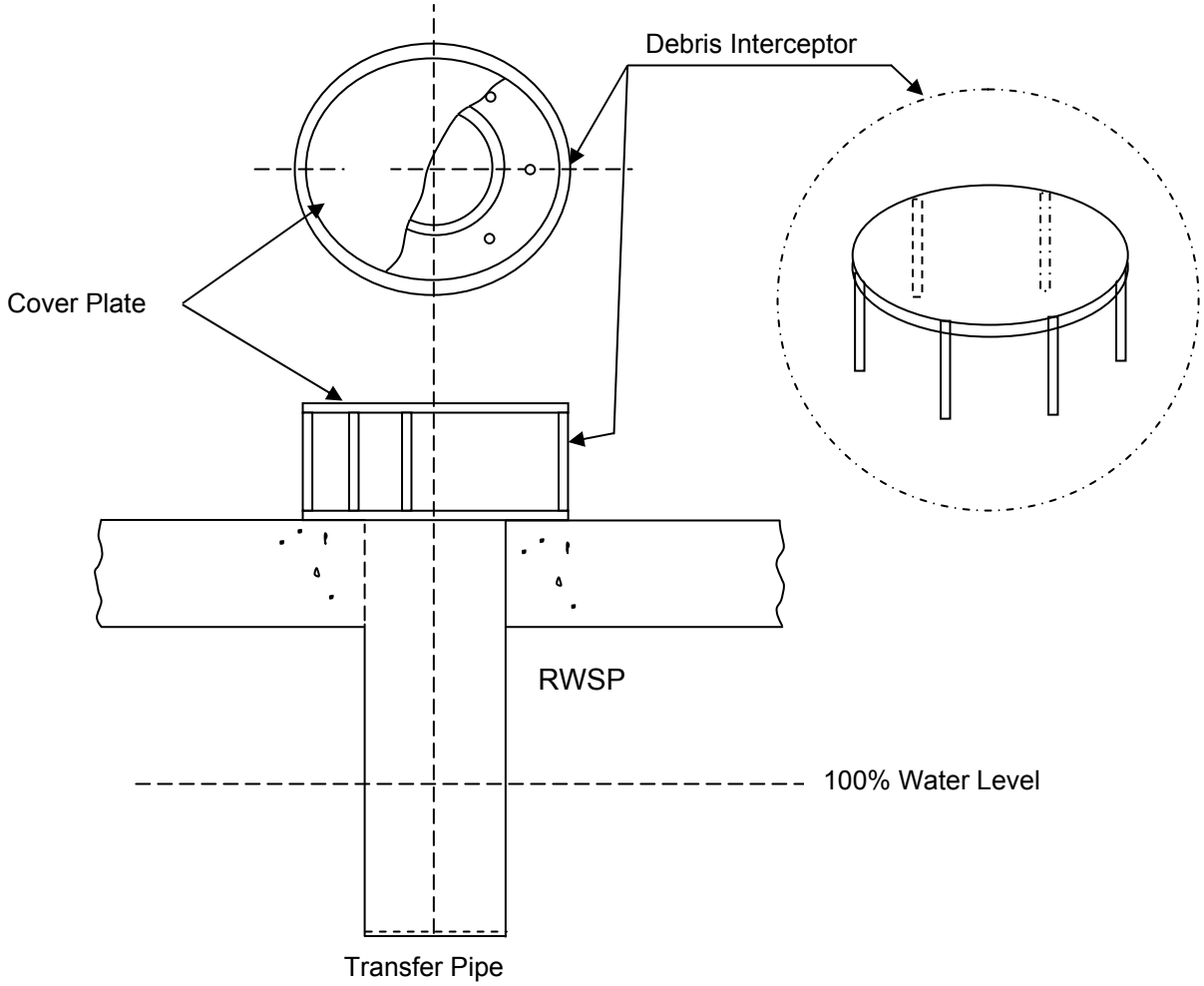

Figure 6.2.1-12 Transfer Piping

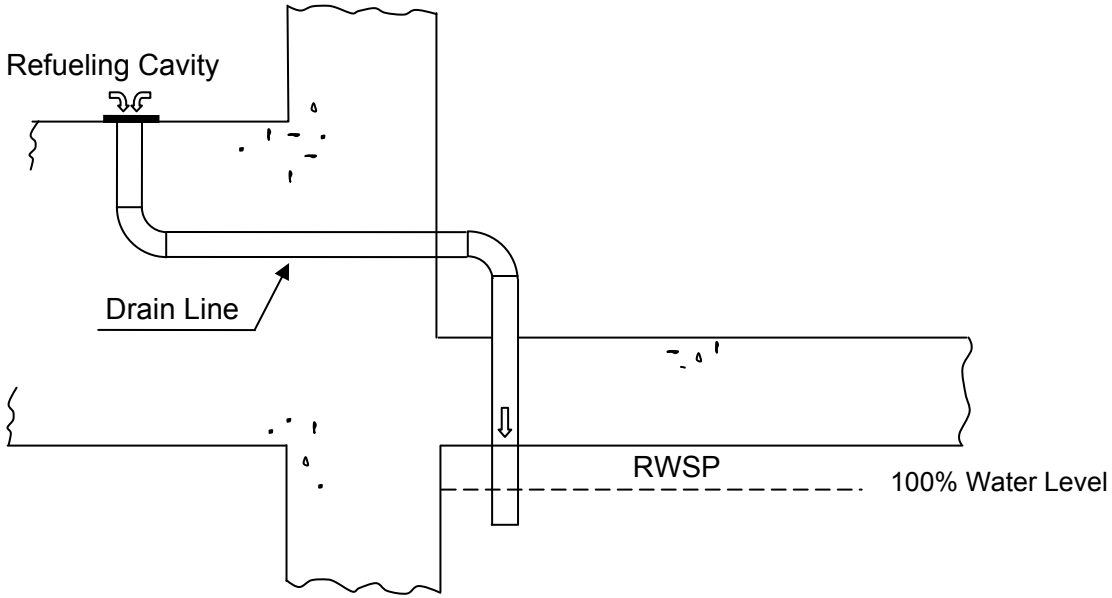

Figure 6.2.1-13 Refueling Cavity Drain Line

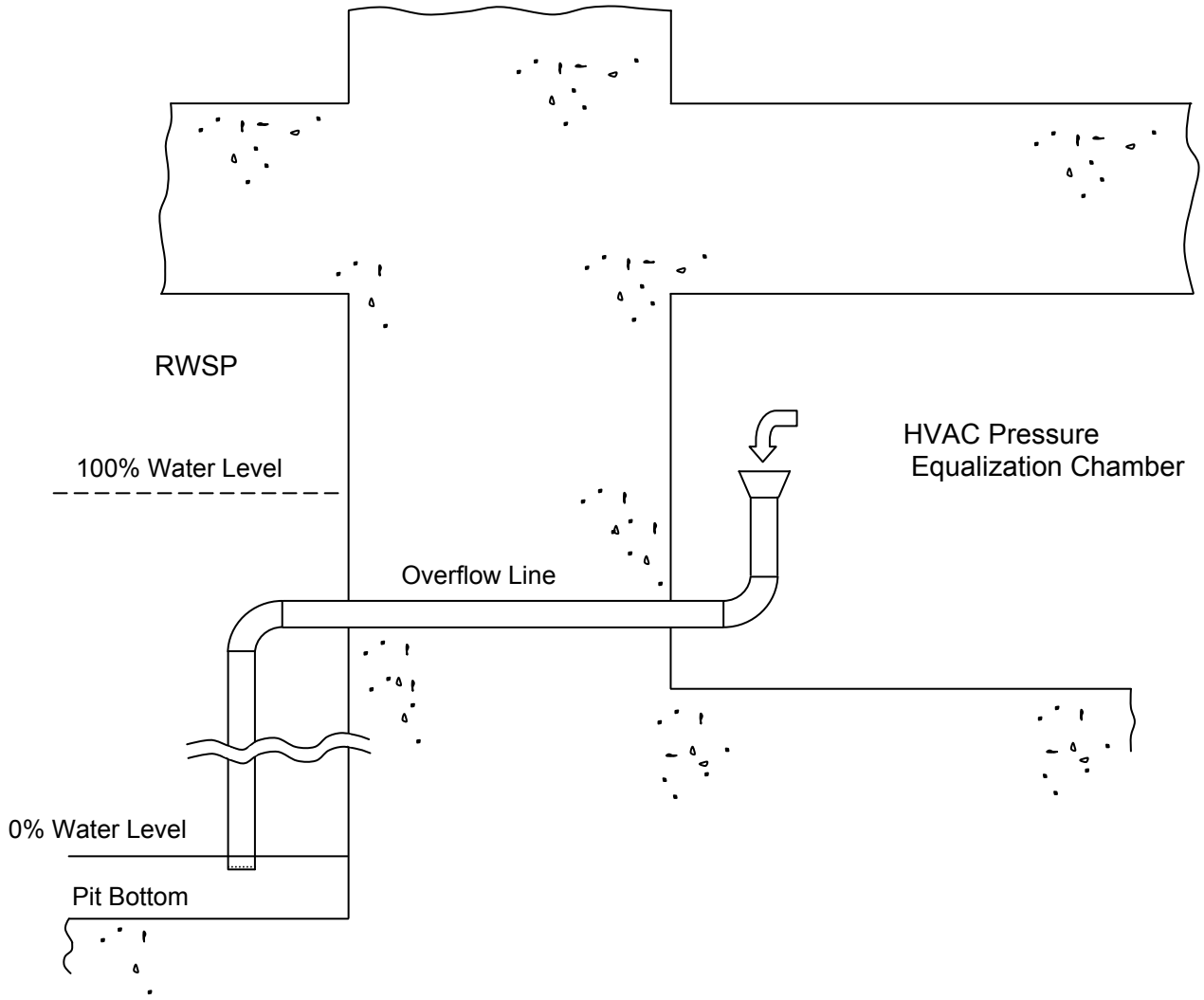

Figure 6.2.1-14 Communicating Piping of HVAC Pressure Equalization Chamber

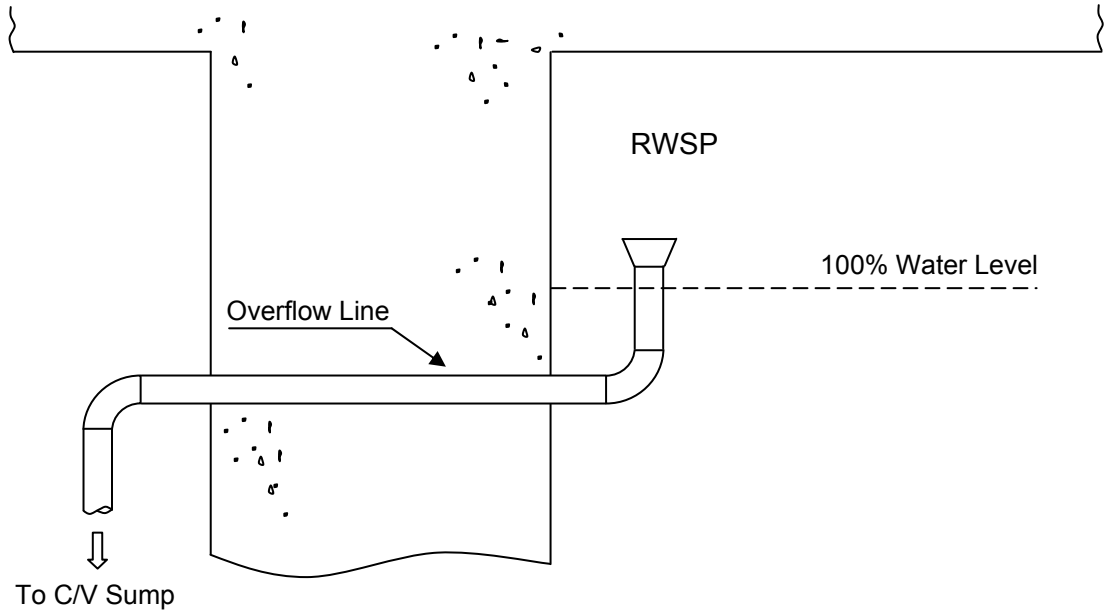

Figure 6.2.1-15 RWSP Overflow Piping

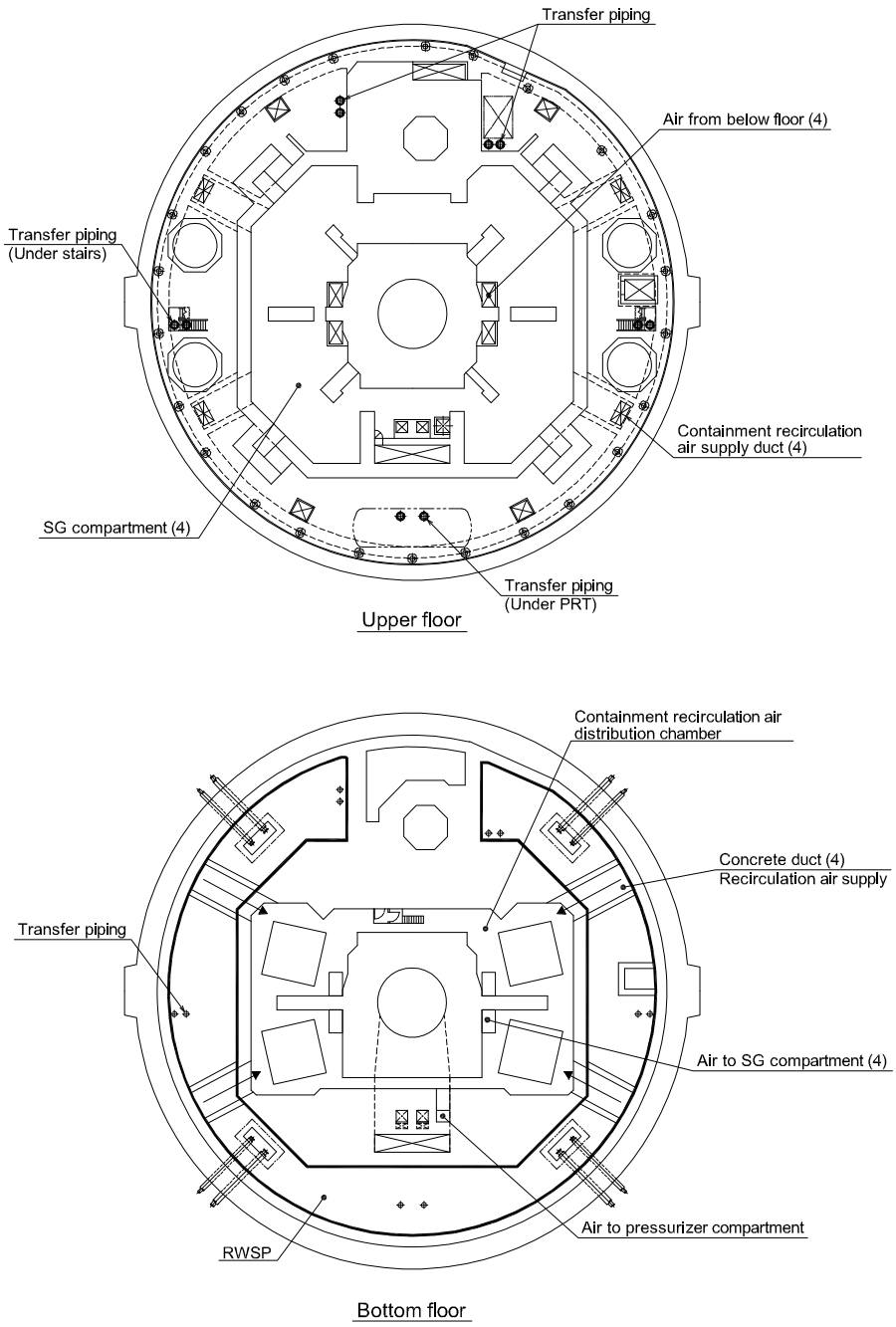

Figure 6.2.1-16 RWSP Upper and Lower Plan View at Elevation 25 ft.- 3 in.

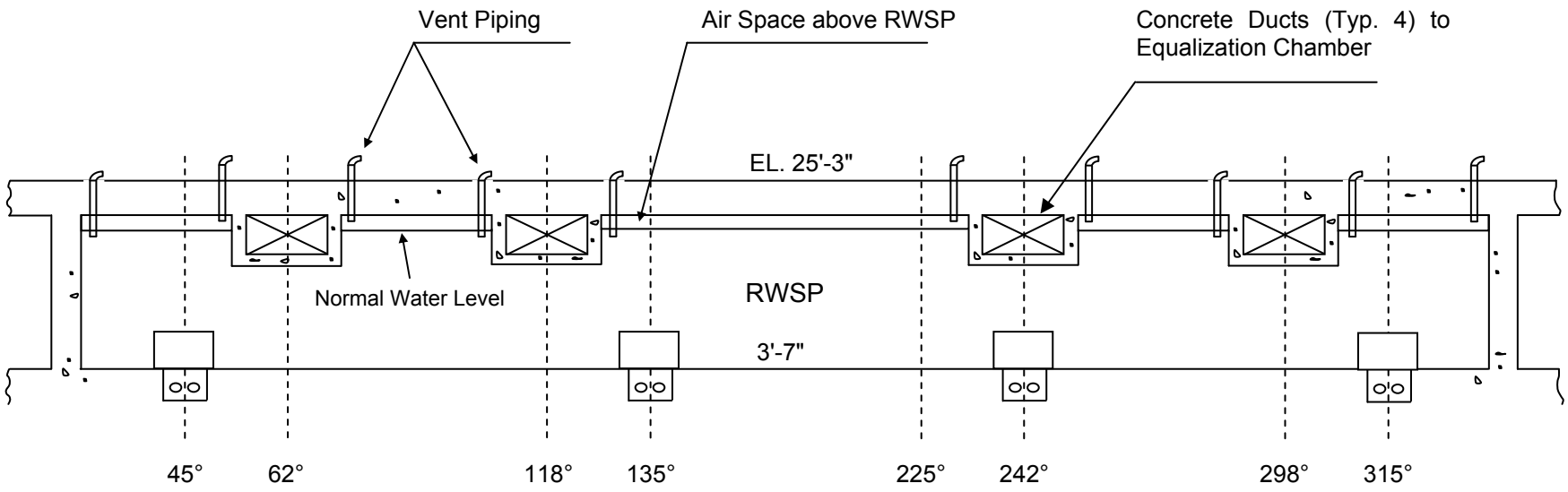

Figure 6.2.1-17 RWSP Panoramic Sectional View

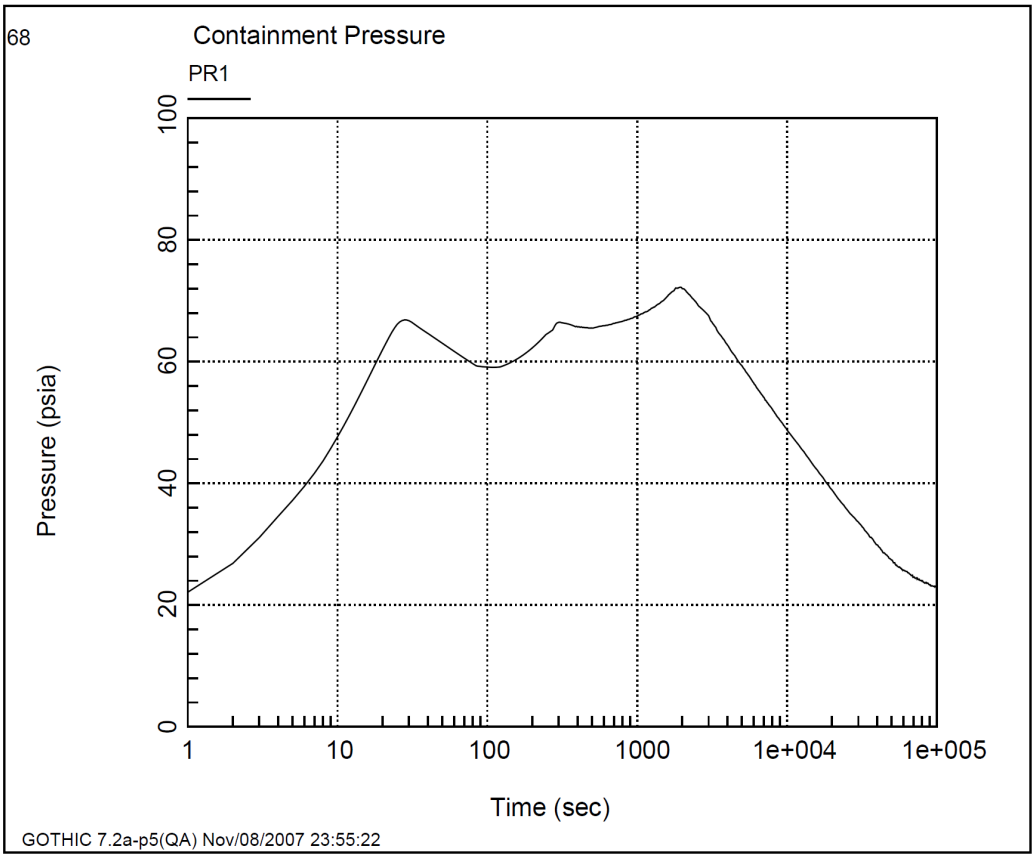

Figure 6.2.1-18 Containment Pressure vs. Time for DEPSG Break (C_D=1.0)

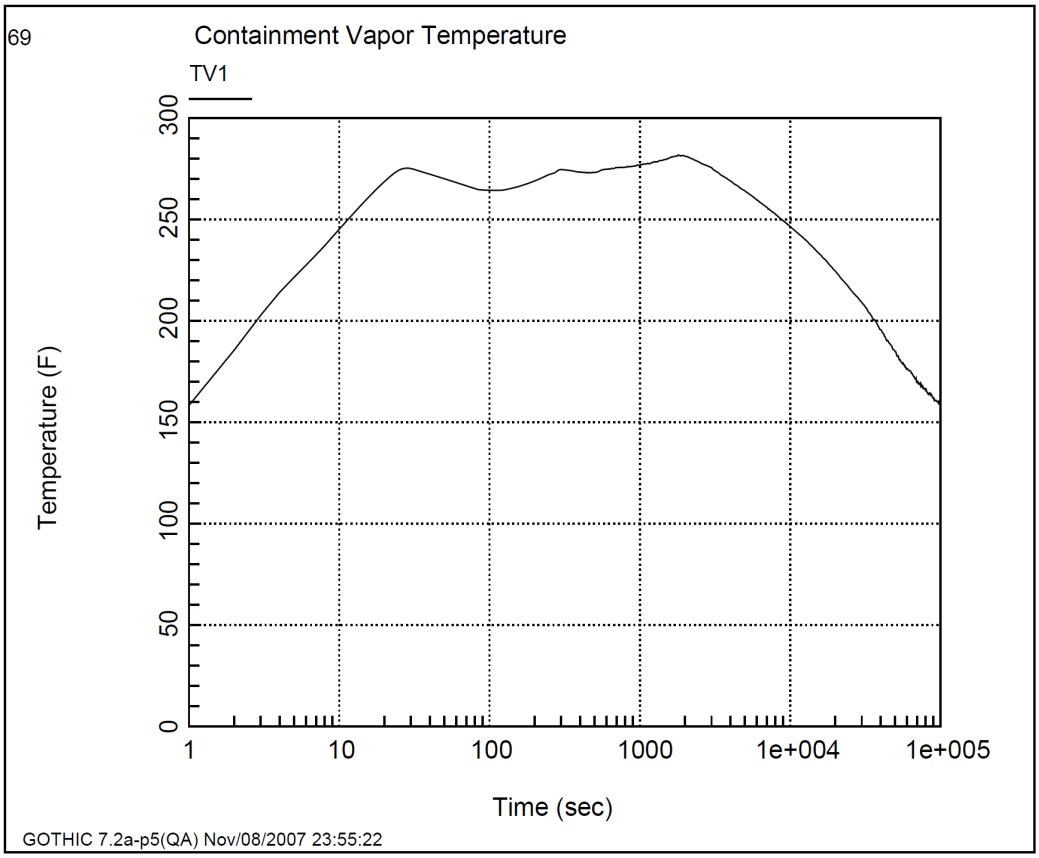

Figure 6.2.1-19 Containment Atmospheric Temperature vs. Time for DEPSG Break (C_D=1.0)

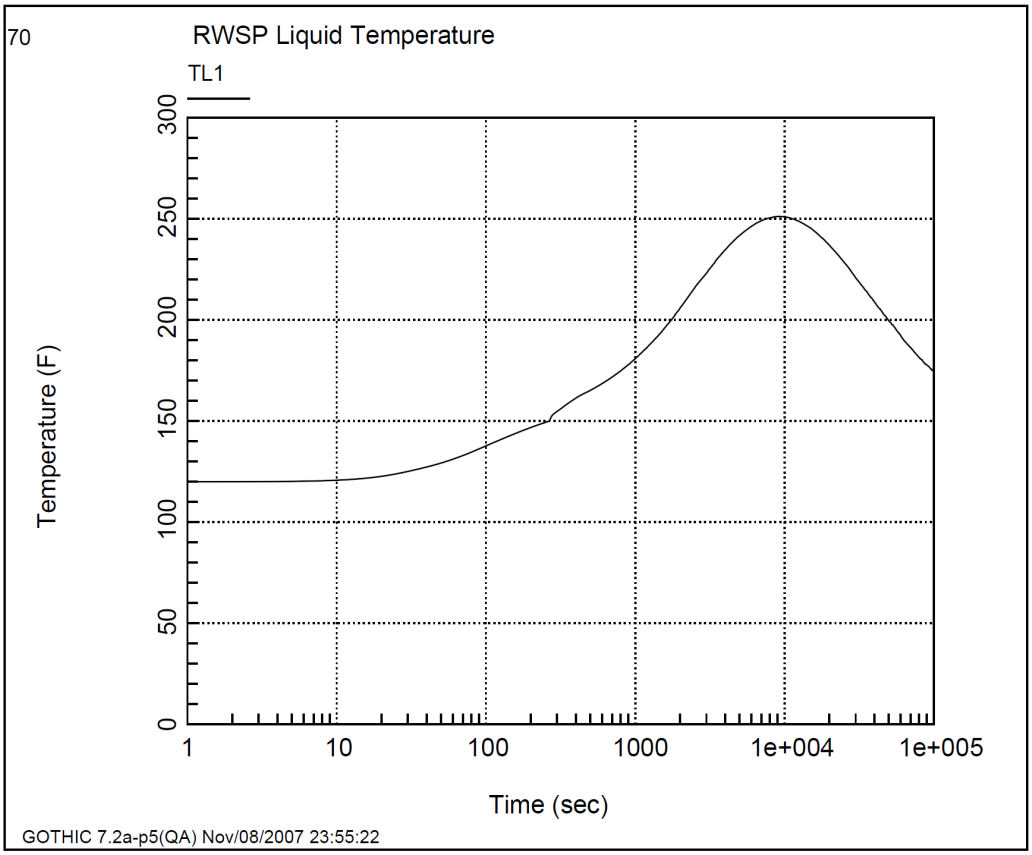

Figure 6.2.1-20 RWSP Water Temperature vs. Time for DEPSG Break (C_D=1.0)

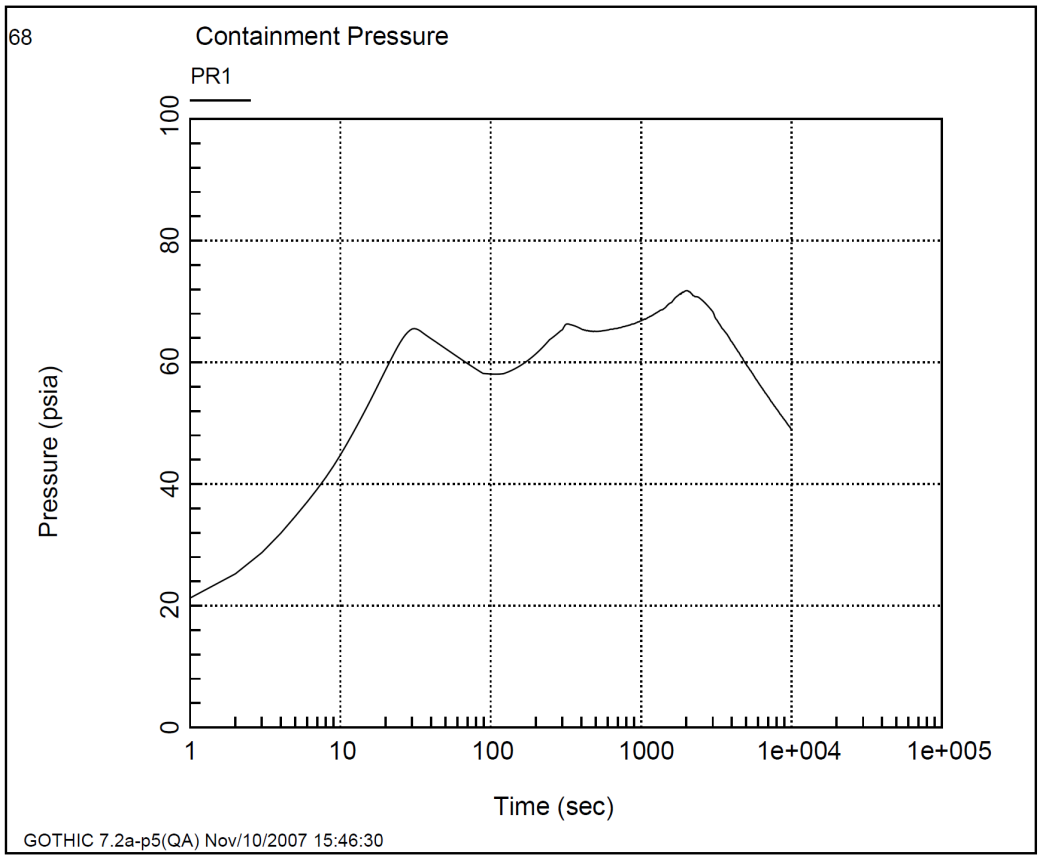

Figure 6.2.1-21 Containment Pressure vs. Time for DEPSG Break (C_D=0.6)

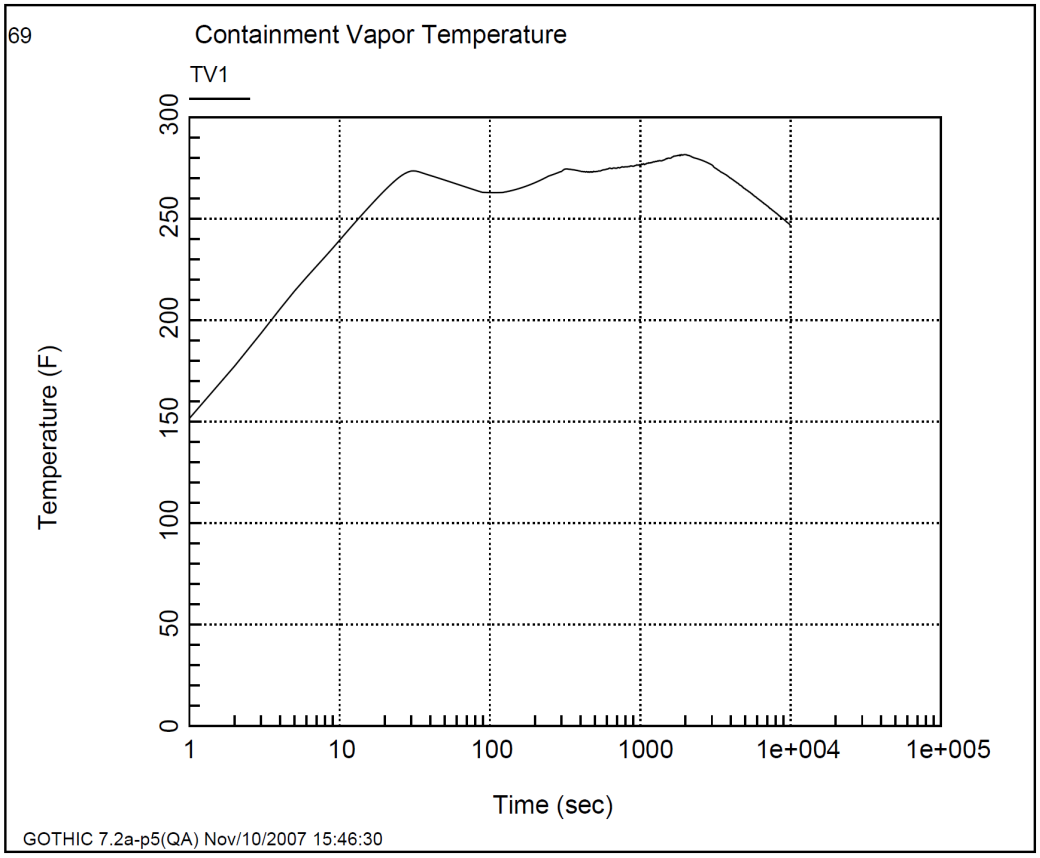

Figure 6.2.1-22 Containment Atmospheric Temperature vs. Time for DEPSG Break (C_D=0.6)

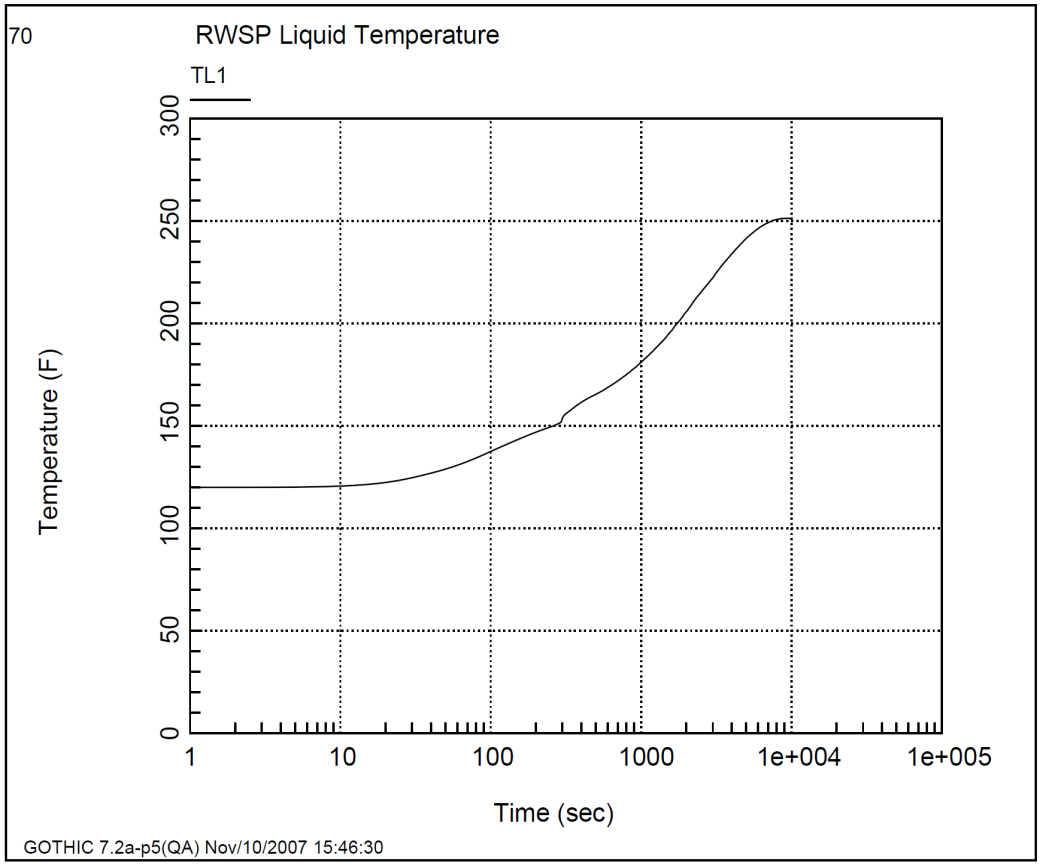

Figure 6.2.1-23 RWSP Water Temperature vs. Time for DEPSG Break (C_D=0.6)

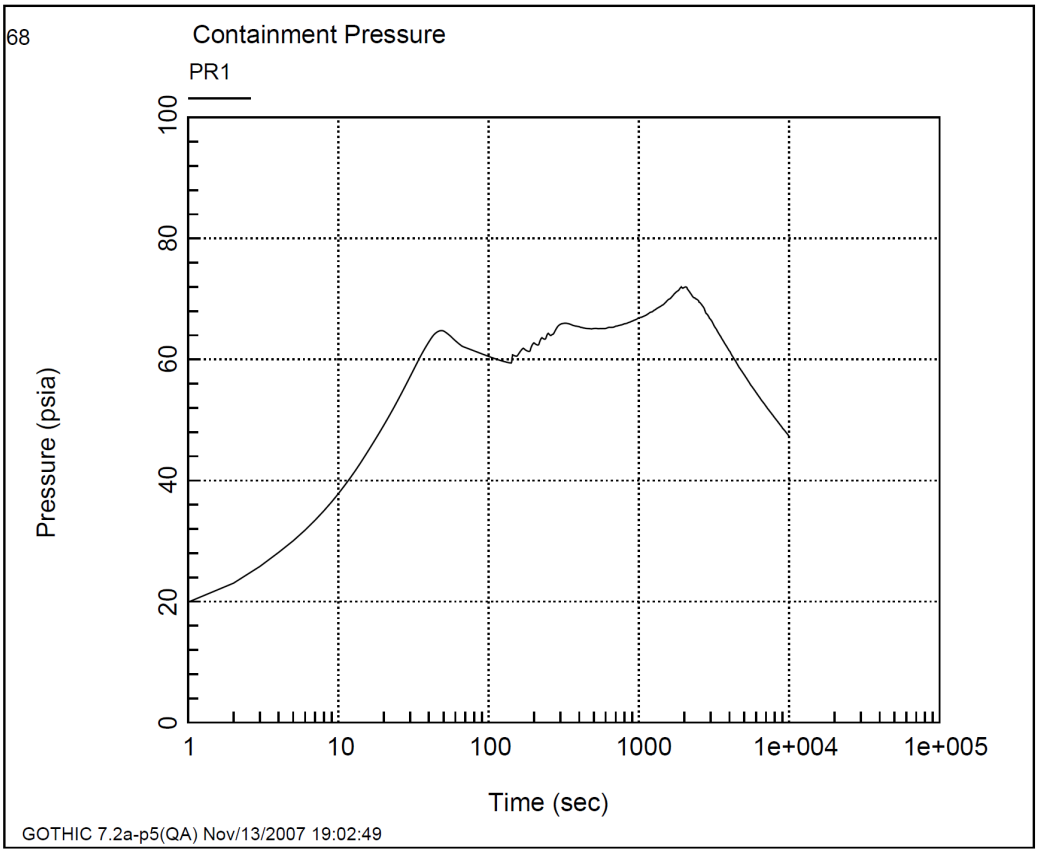

Figure 6.2.1-24 Containment Pressure vs. Time for 3 ft^2 Pump Suction Break

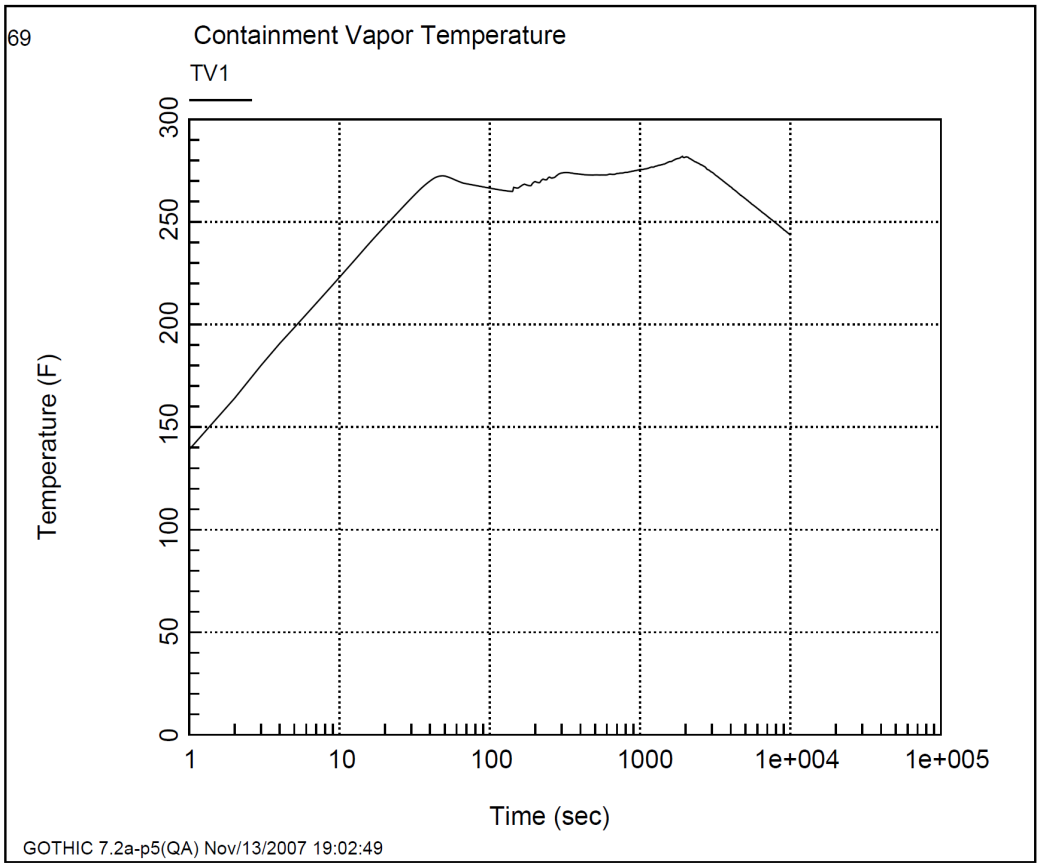

Figure 6.2.1-25 Containment Atmospheric Temperature vs. Time for 3 ft^2 Pump Suction Break

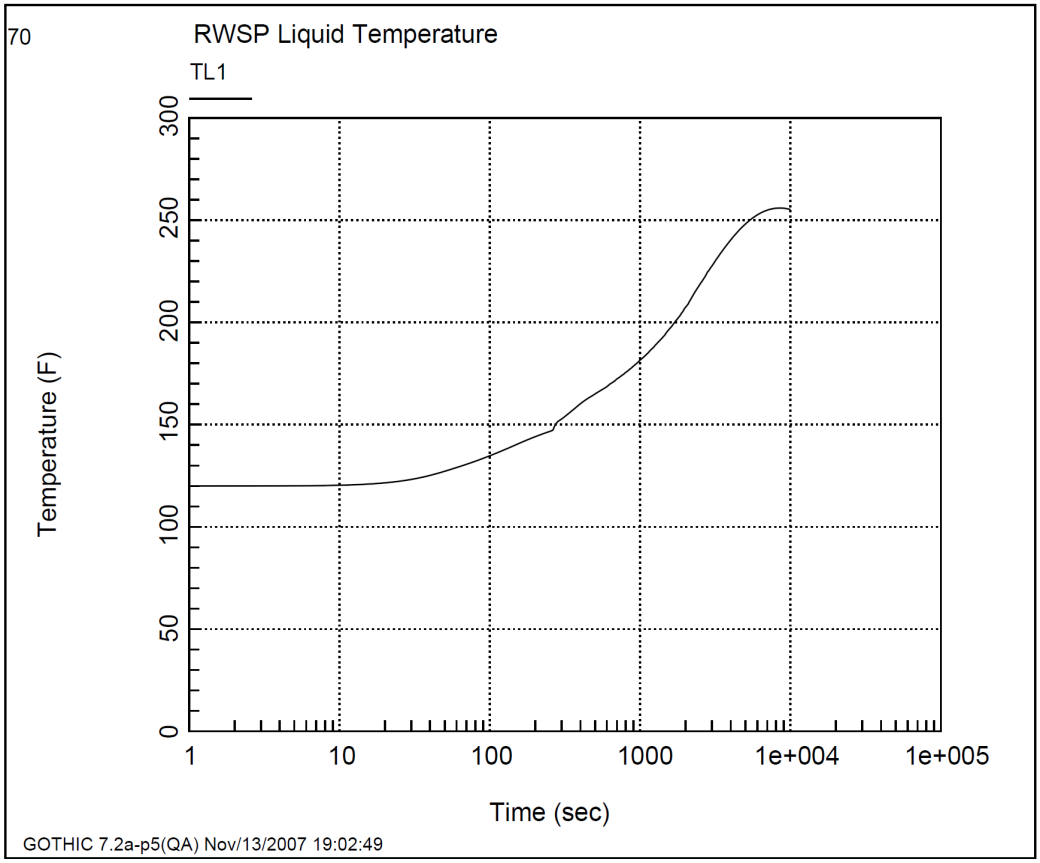

Figure 6.2.1-26 RWSP Water Temperature vs. Time for 3 ft^2 Pump Suction Break

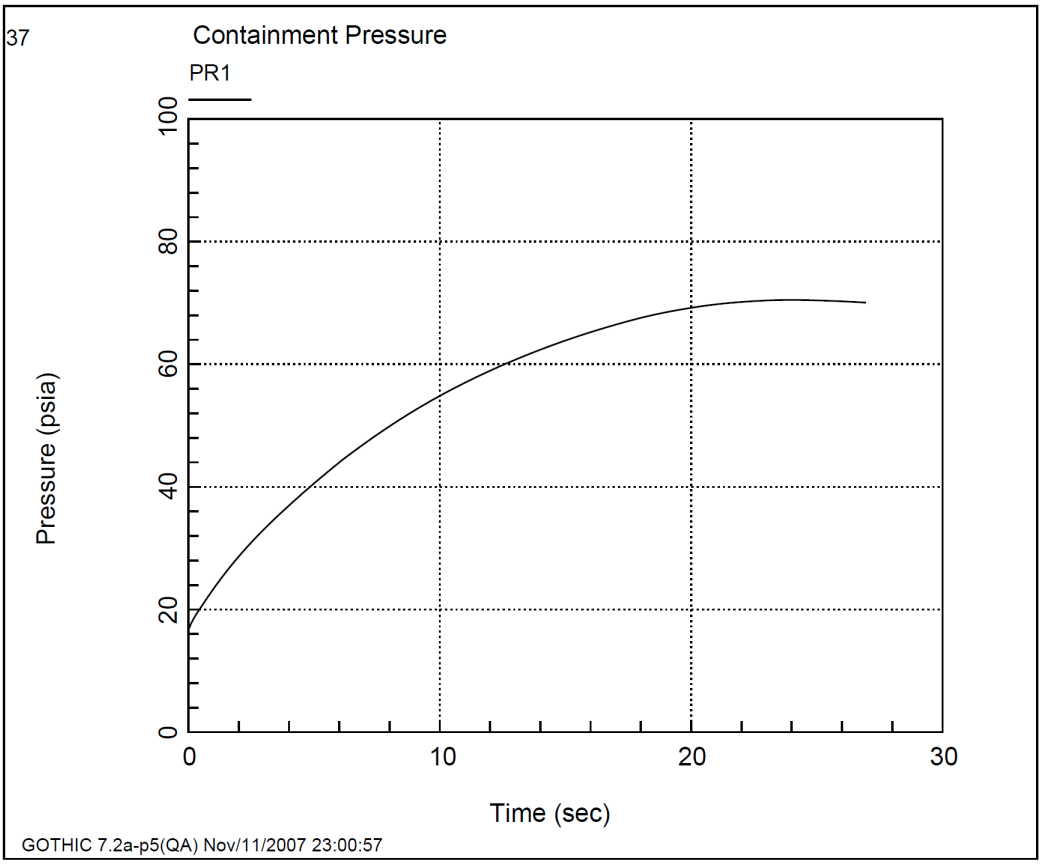

Figure 6.2.1-27 Containment Pressure vs. Time for DEHLG Break (C_D=1.0)

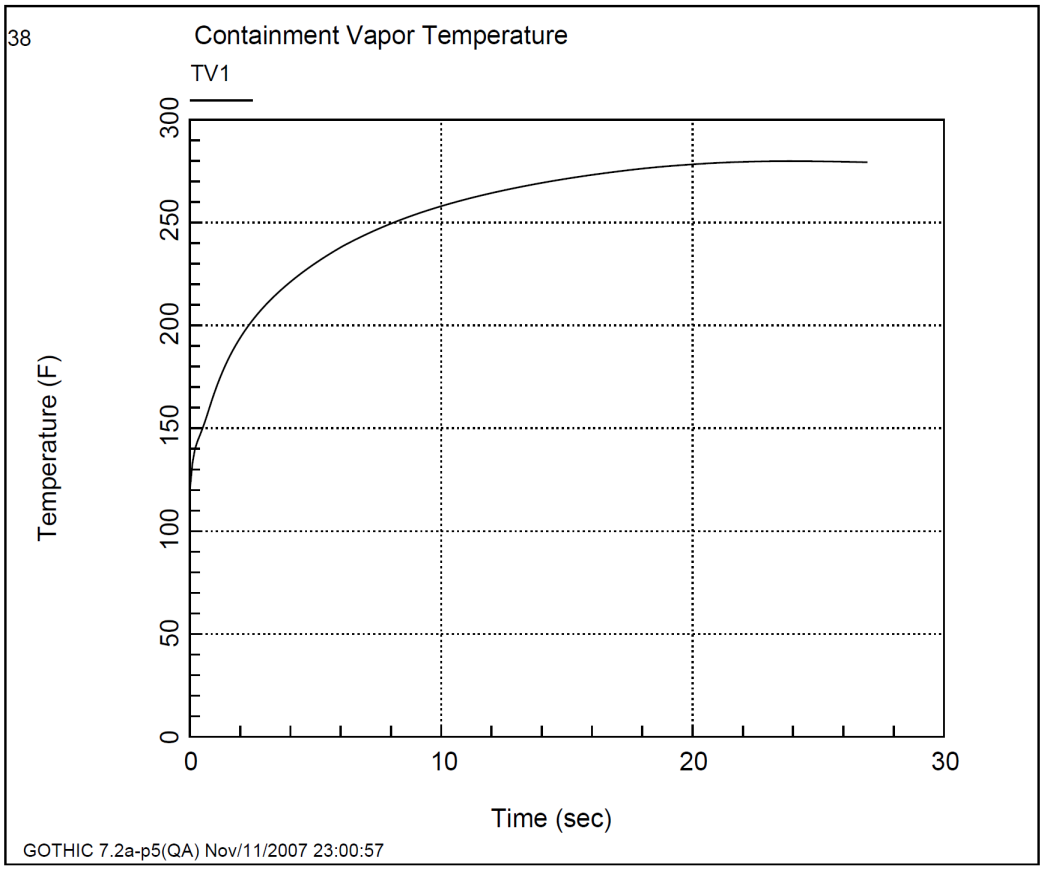

Figure 6.2.1-28 Containment Atmospheric Temperature vs. Time for DEHLG Break (C_D=1.0)

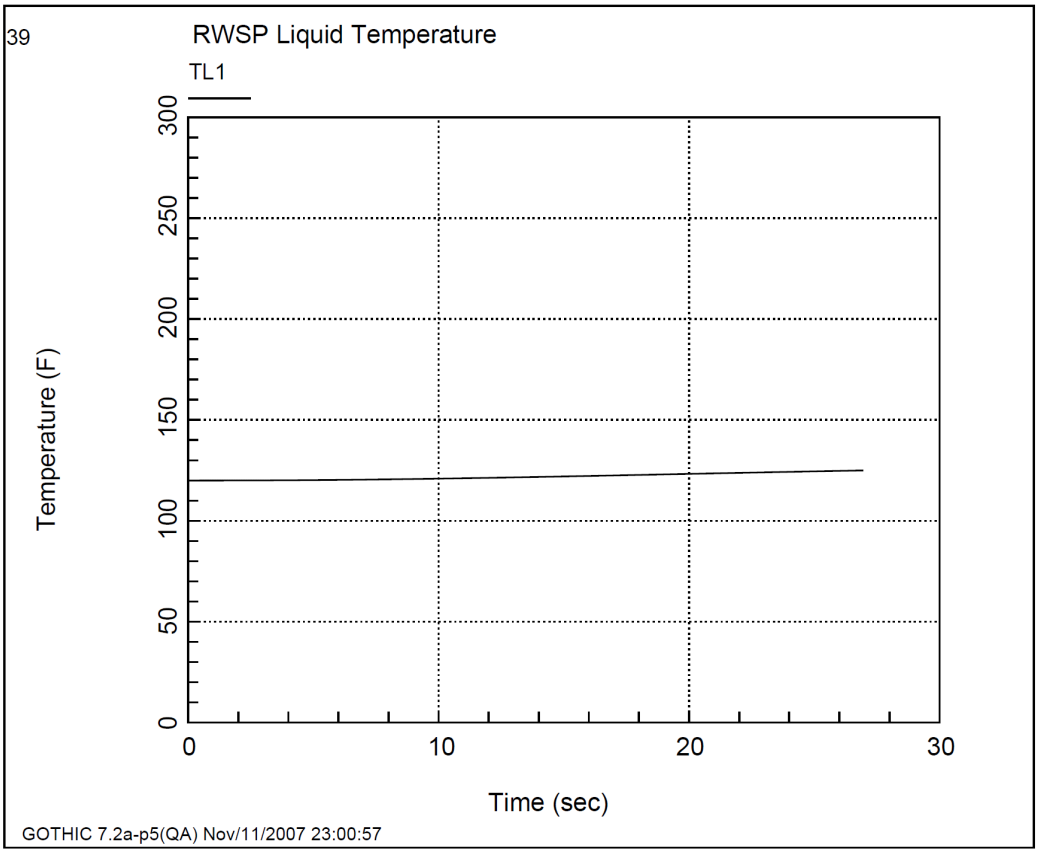

Figure 6.2.1-29 RWSP Water Temperature vs. Time for DEHLG Break (C_D=1.0)

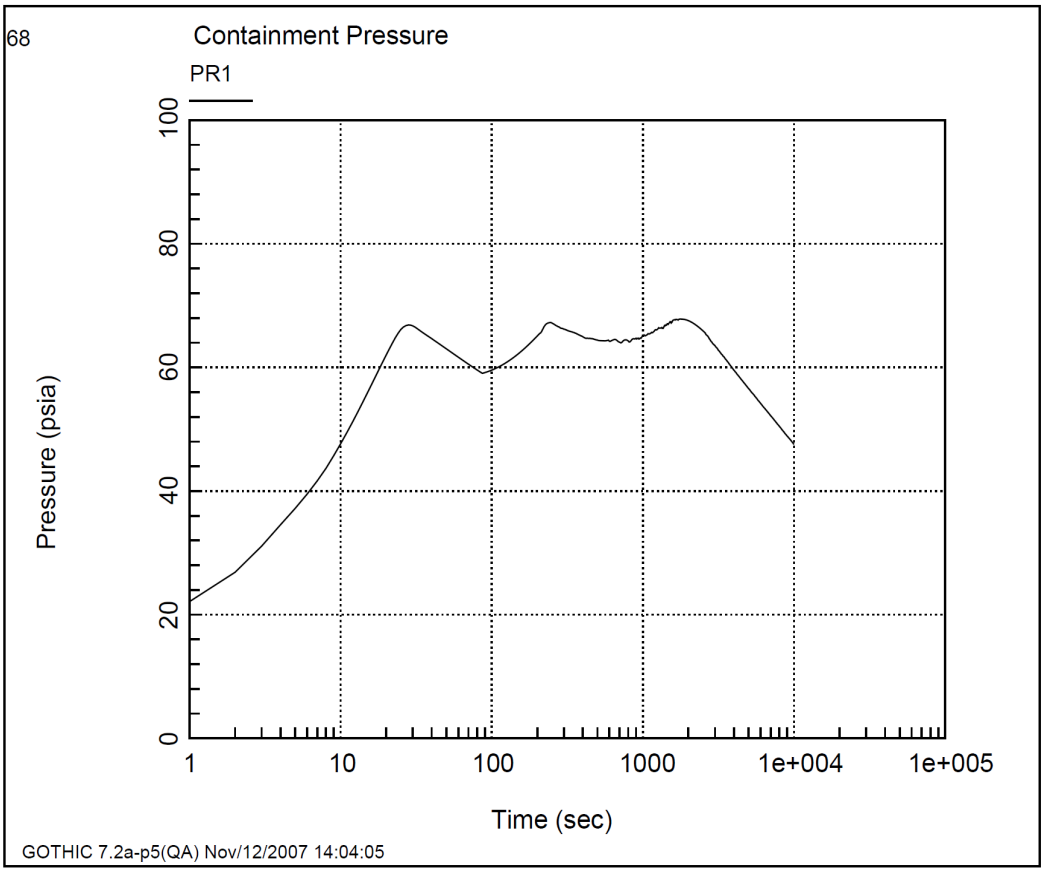

Figure 6.2.1-30 Containment Pressure vs. Time for DEPSG Break with Maximum Safety Injection

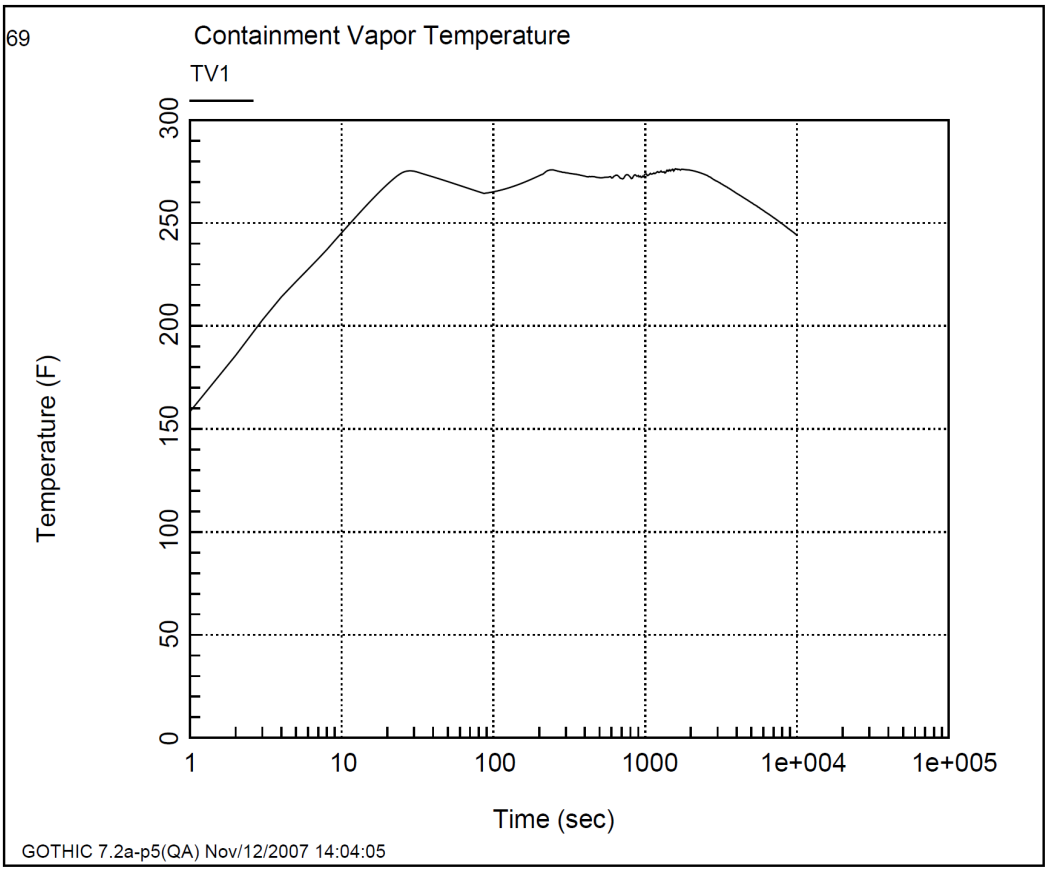

Figure 6.2.1-31 Containment Atmospheric Temperature vs. Time for DEPSG Break with Maximum Safety Injection

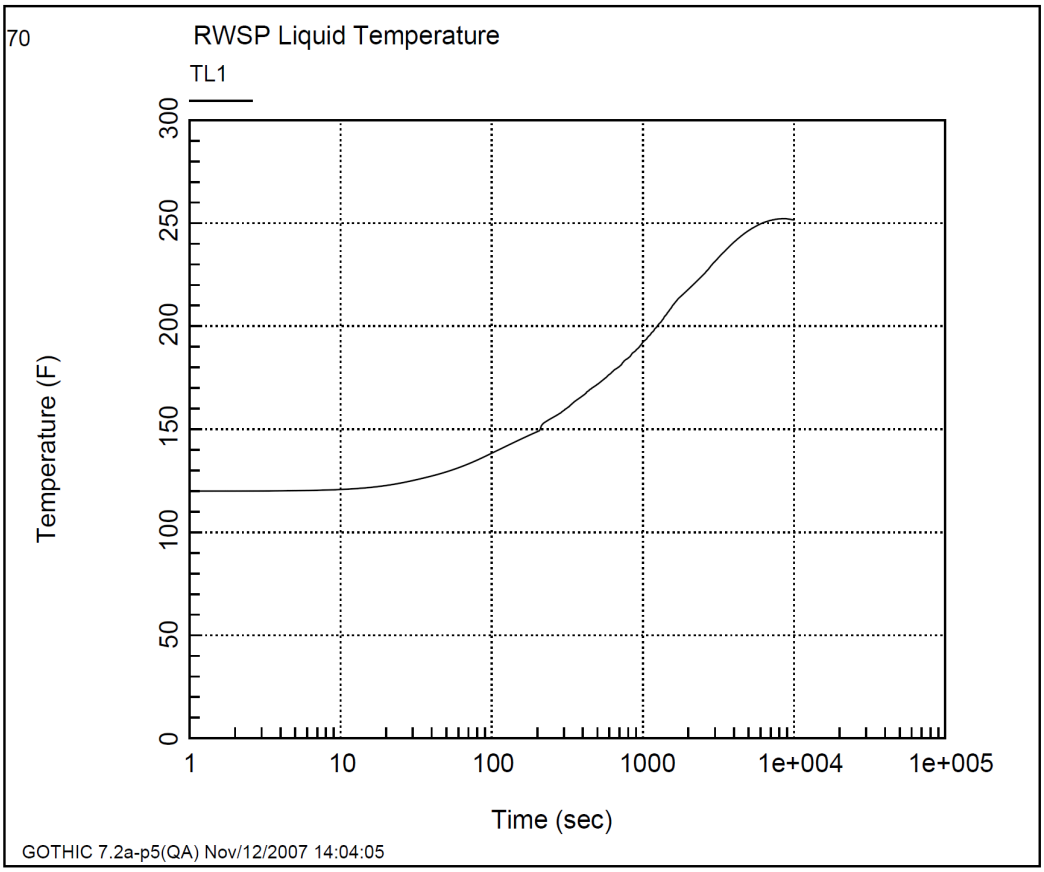

Figure 6.2.1-32 RWSP Water Temperature vs. Time for DEPSG Break with Maximum Safety Injection

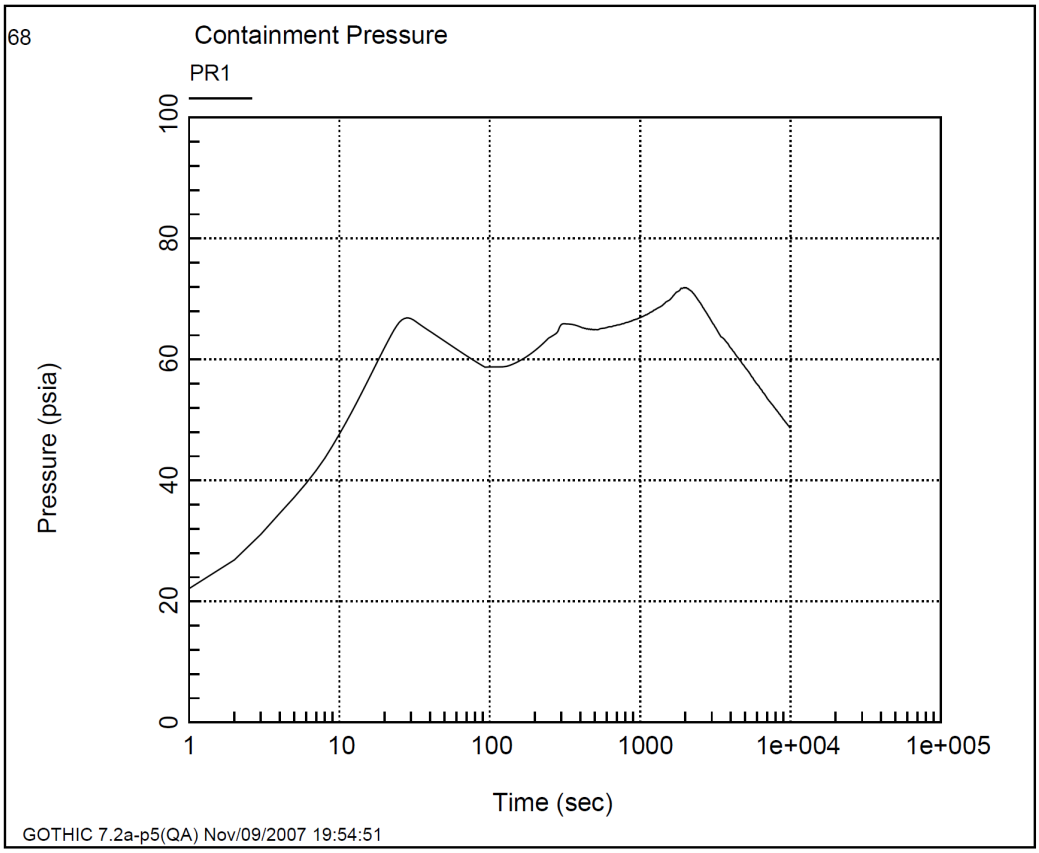

Figure 6.2.1-33 Containment Pressure vs. Time for DEPSG Break with Maximum Accumulator Water

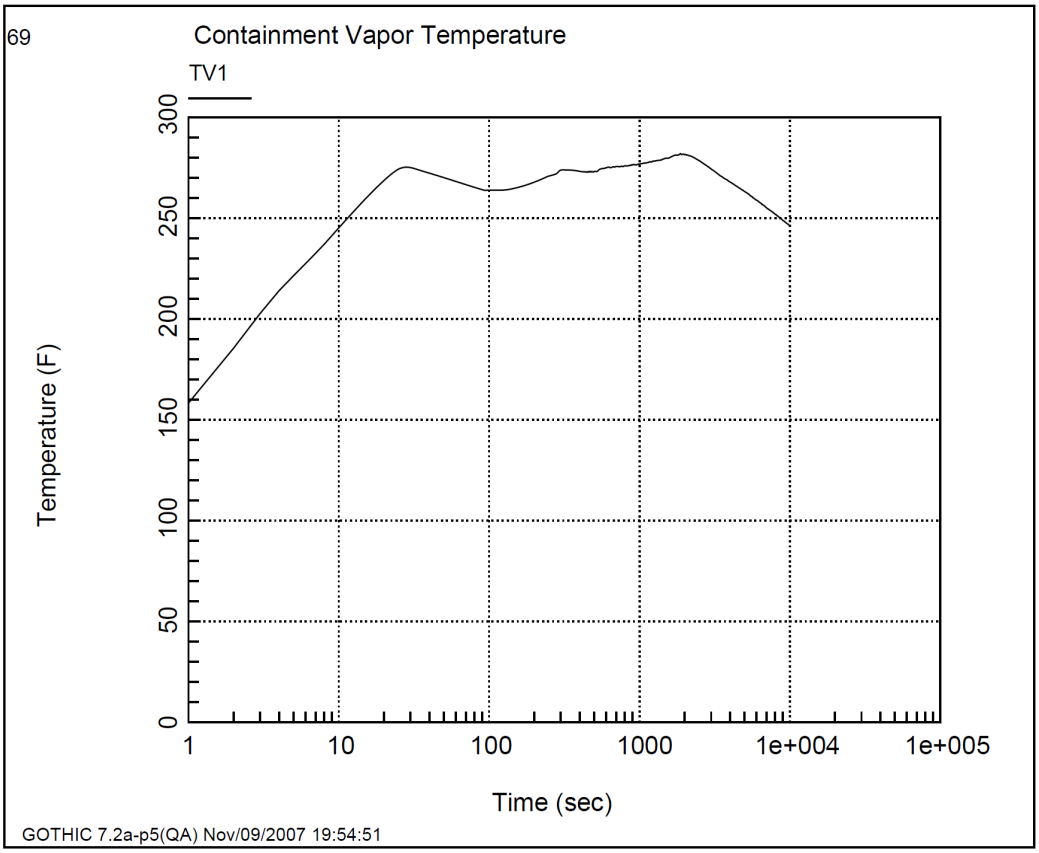

Figure 6.2.1-34 Containment Atmospheric Temperature vs. Time for DEPSG Break with Maximum Accumulator Water

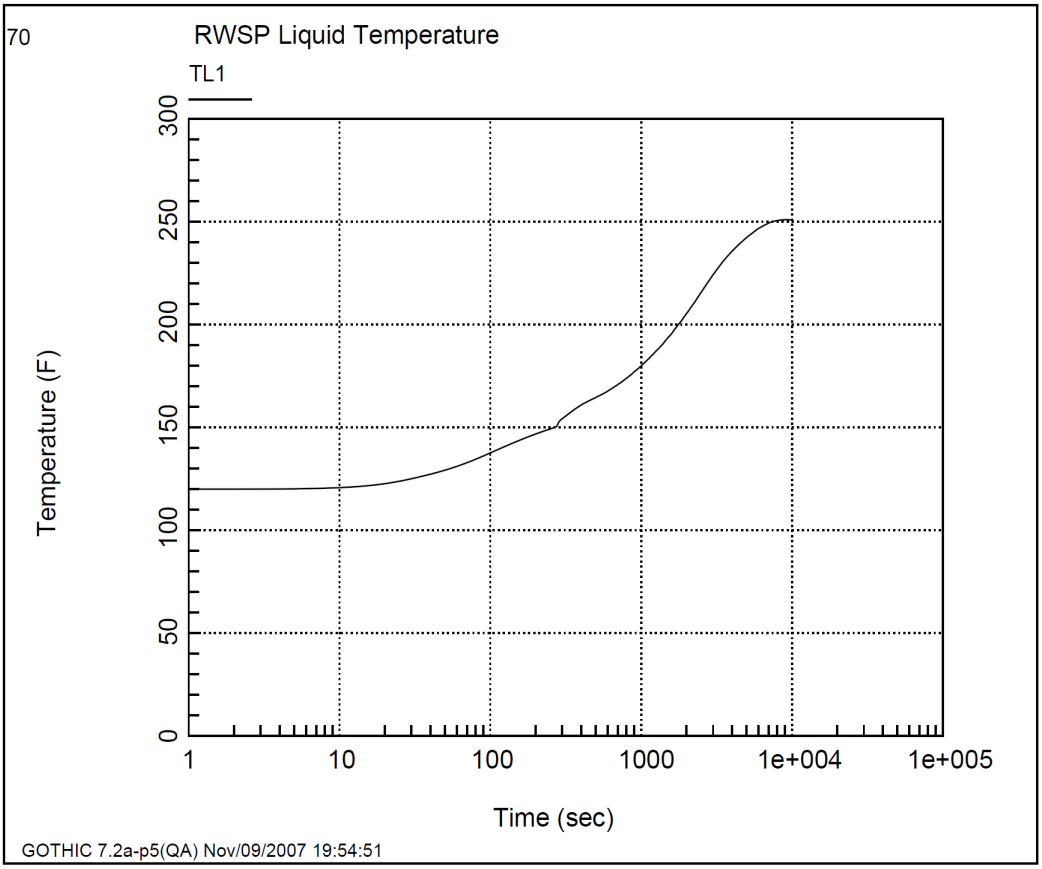

Figure 6.2.1-35 RWSP Water Temperature vs. Time for DEPSG Break with Maximum Accumulator Water

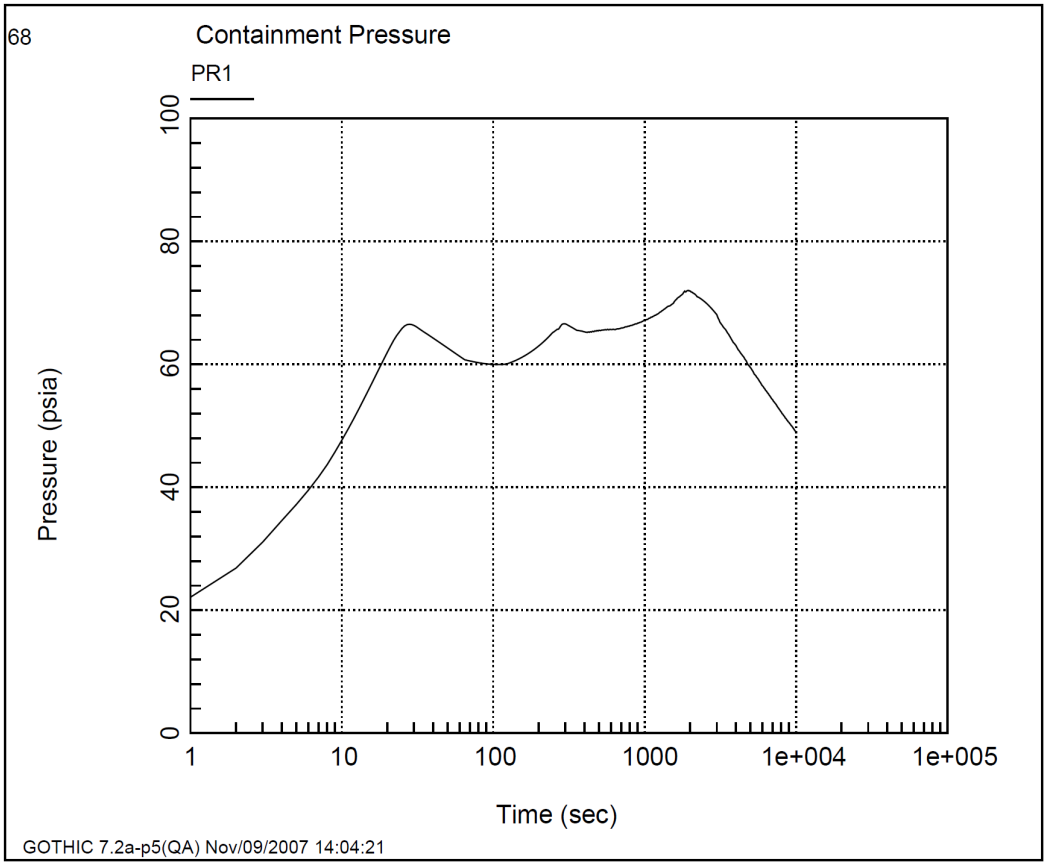

Figure 6.2.1-36 Containment Pressure vs. Time for DEPSG Break with Maximum Accumulator Flowrate

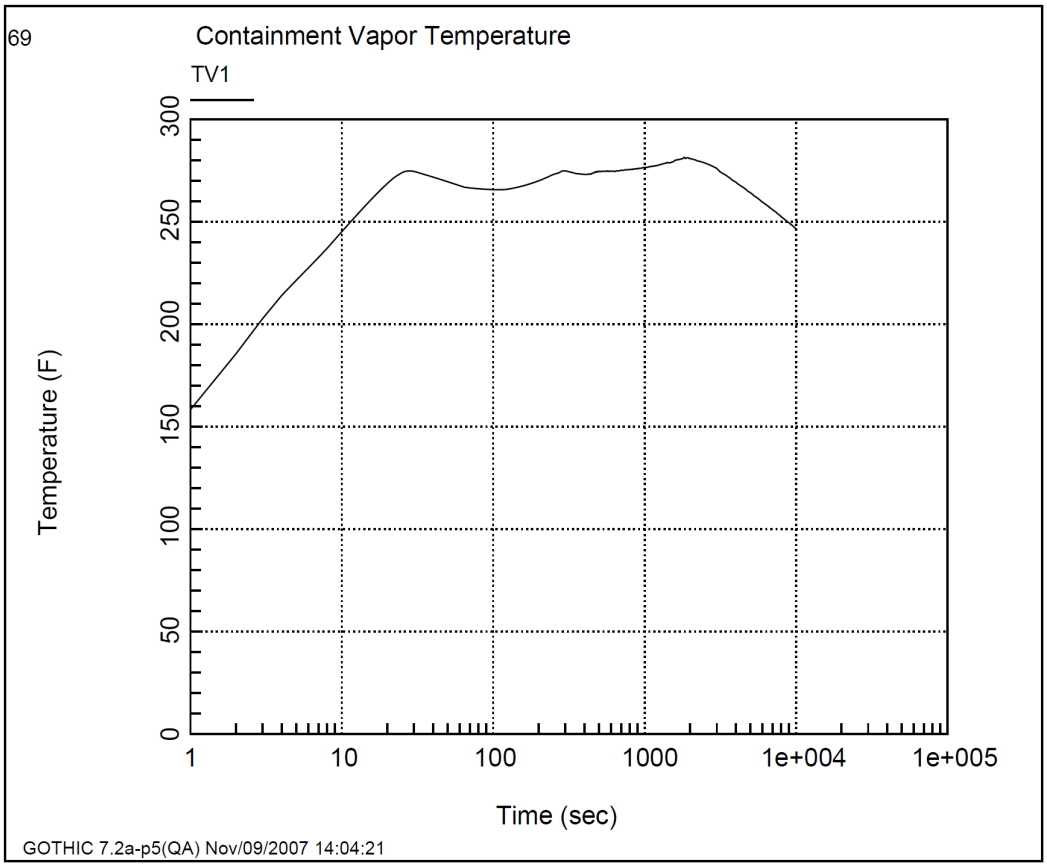

Figure 6.2.1-37 Containment Atmospheric Temperature vs. Time for DEPSG Break with Maximum Accumulator Flowrate

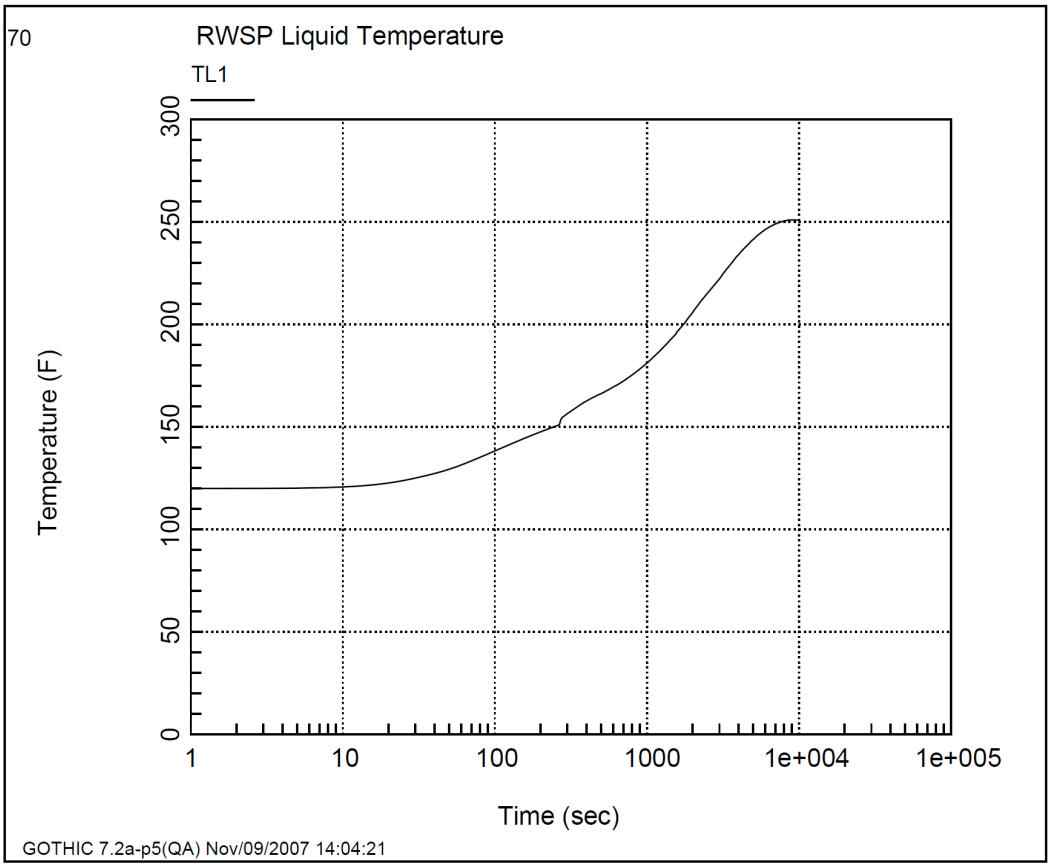

Figure 6.2.1-38 RWSP Water Temperature vs. Time for DEPSG Break with Maximum Accumulator Flowrate

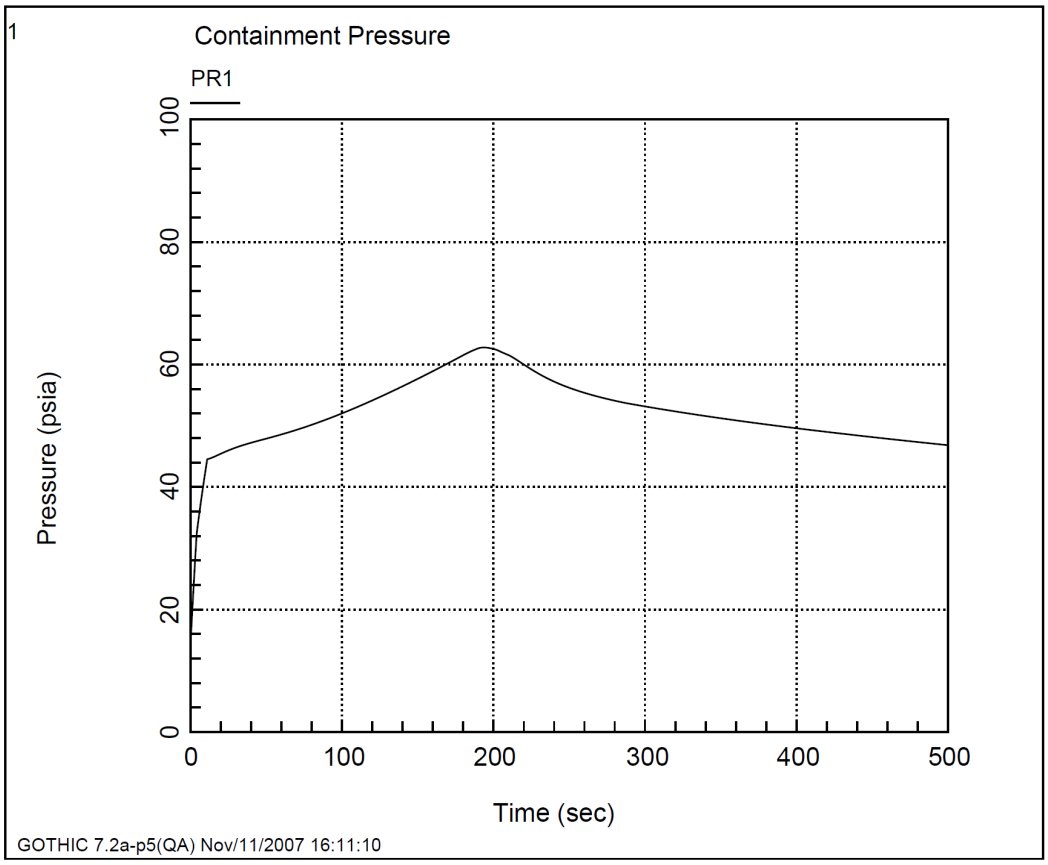

Figure 6.2.1-39 Containment Pressure vs. Time for MSLB Case 1 (Double Ended Break, Reactor Power Level 102%, Offsite Power Available)

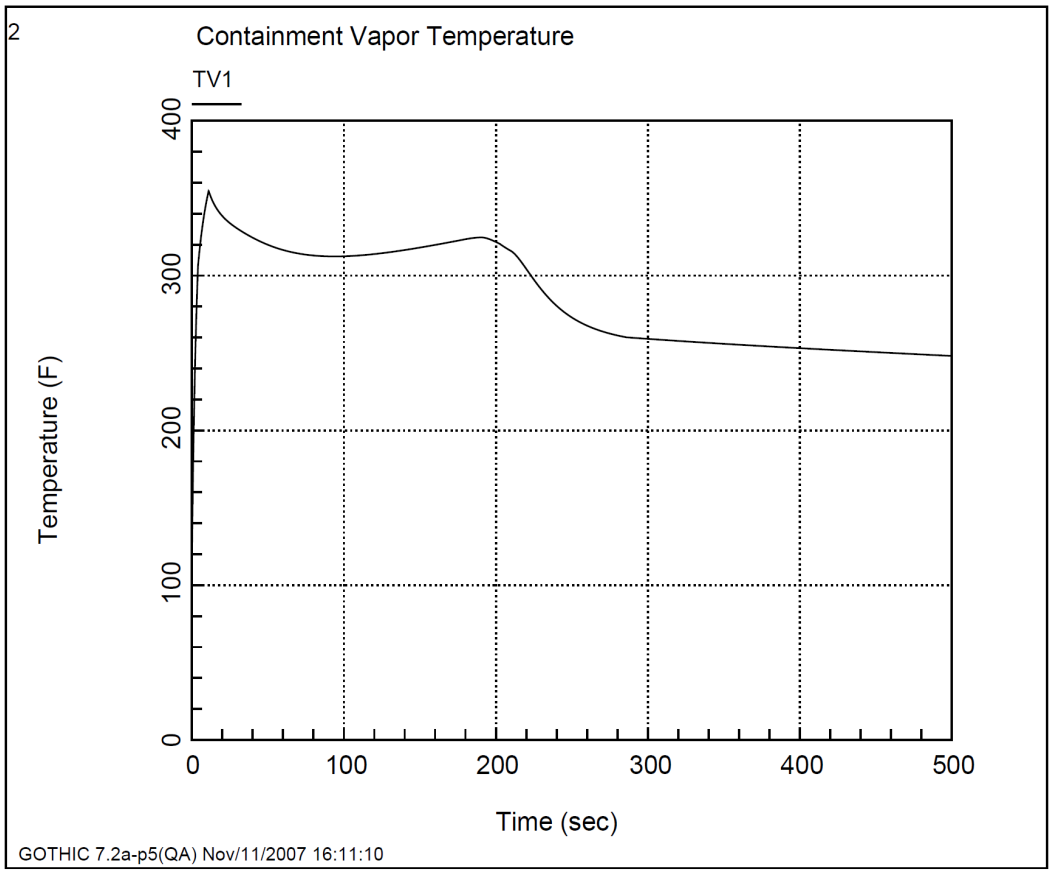

Figure 6.2.1-40 Containment Atmospheric Temperature vs. Time for MSLB Case 1 (Double Ended Break, Reactor Power Level 102%, Offsite Power Available)

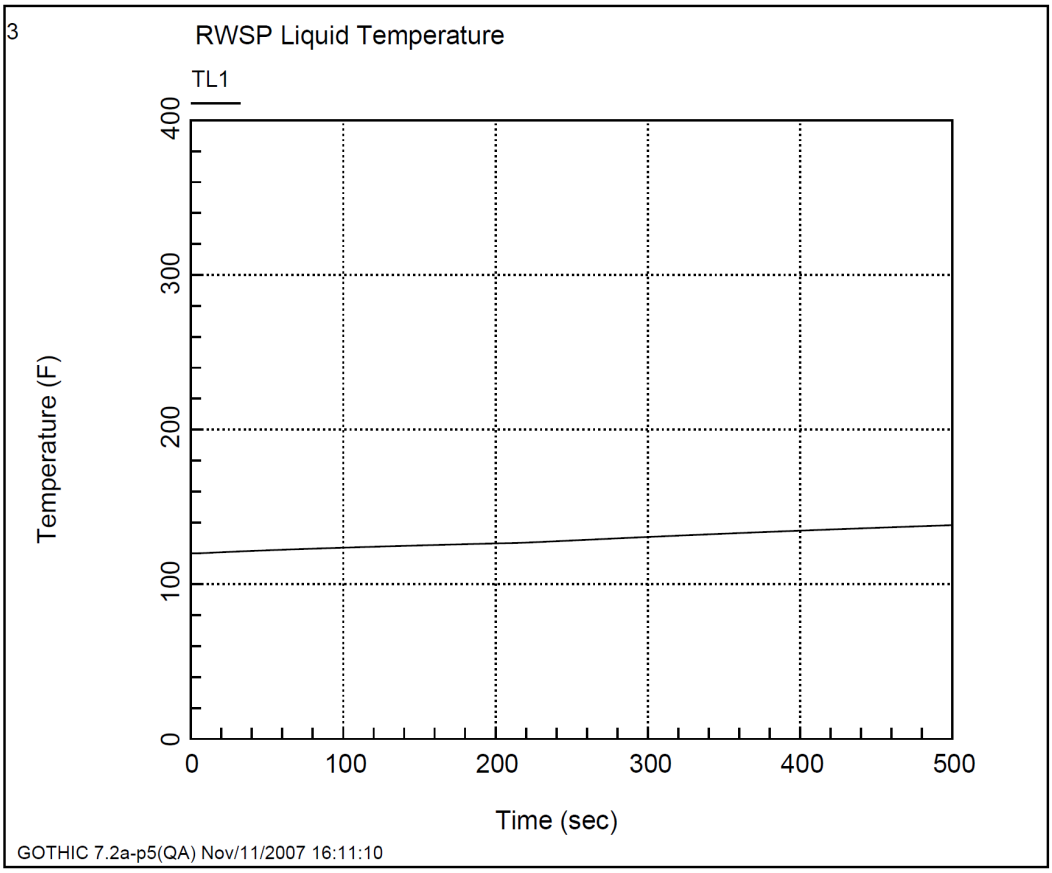

Figure 6.2.1-41 RWSP Water Temperature vs. Time for MSLB Case 1 (Double Ended Break, Reactor Power Level 102%, Offsite Power Available)

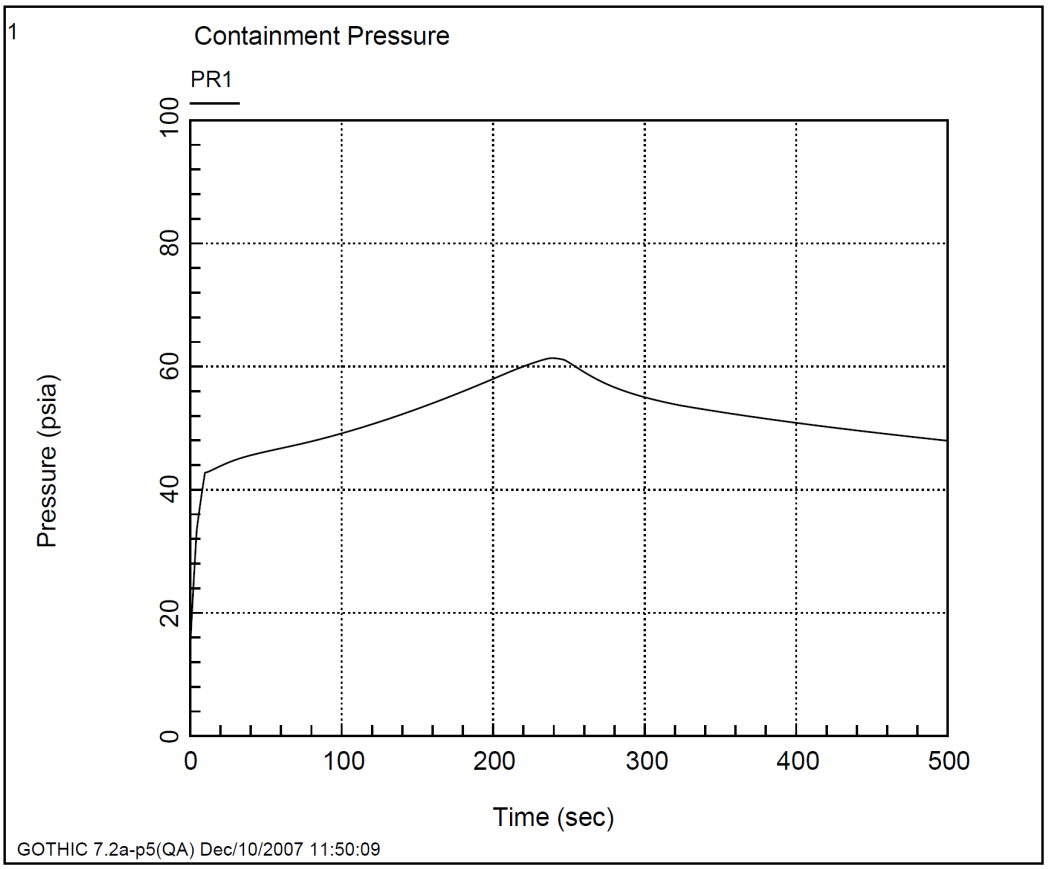

Figure 6.2.1-42 Containment Pressure vs. Time for MSLB Case 2 (Double Ended Break, Reactor Power Level 75%, Offsite Power Available)

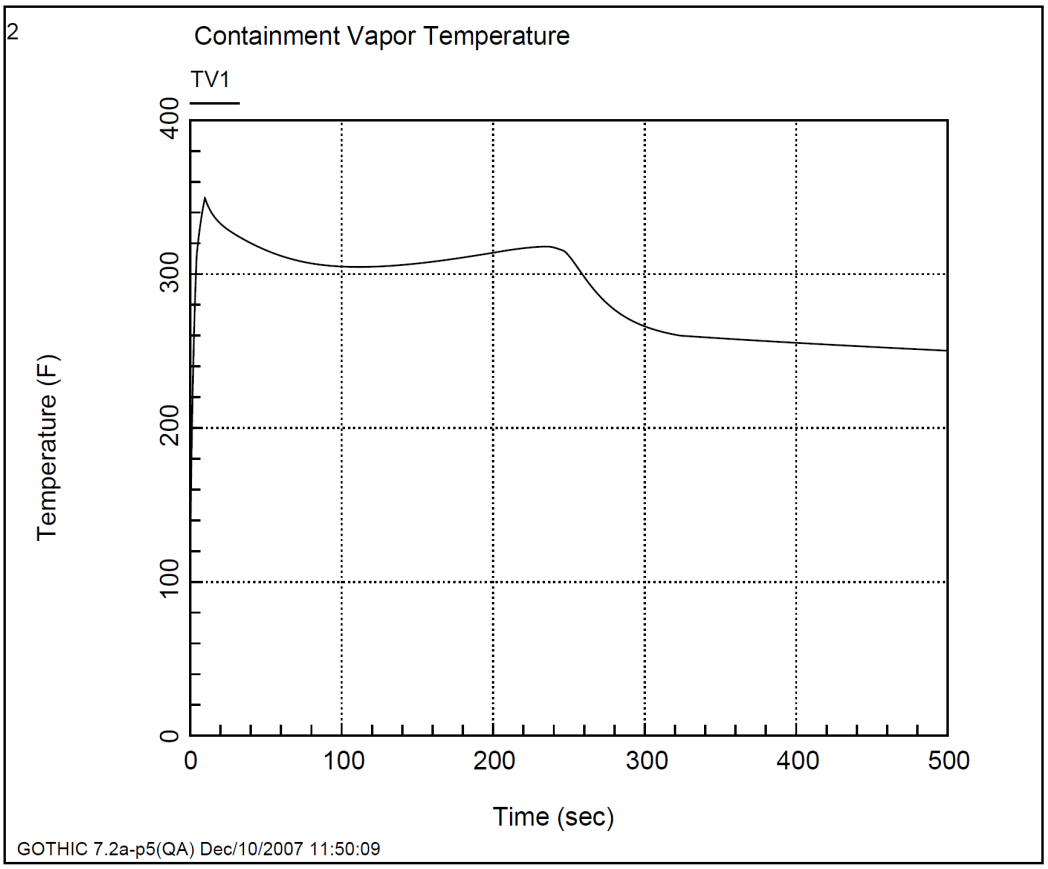

Figure 6.2.1-43 Containment Atmospheric Temperature vs. Time for MSLB Case 2 (Double Ended Break, Reactor Power Level 75%, Offsite Power Available)

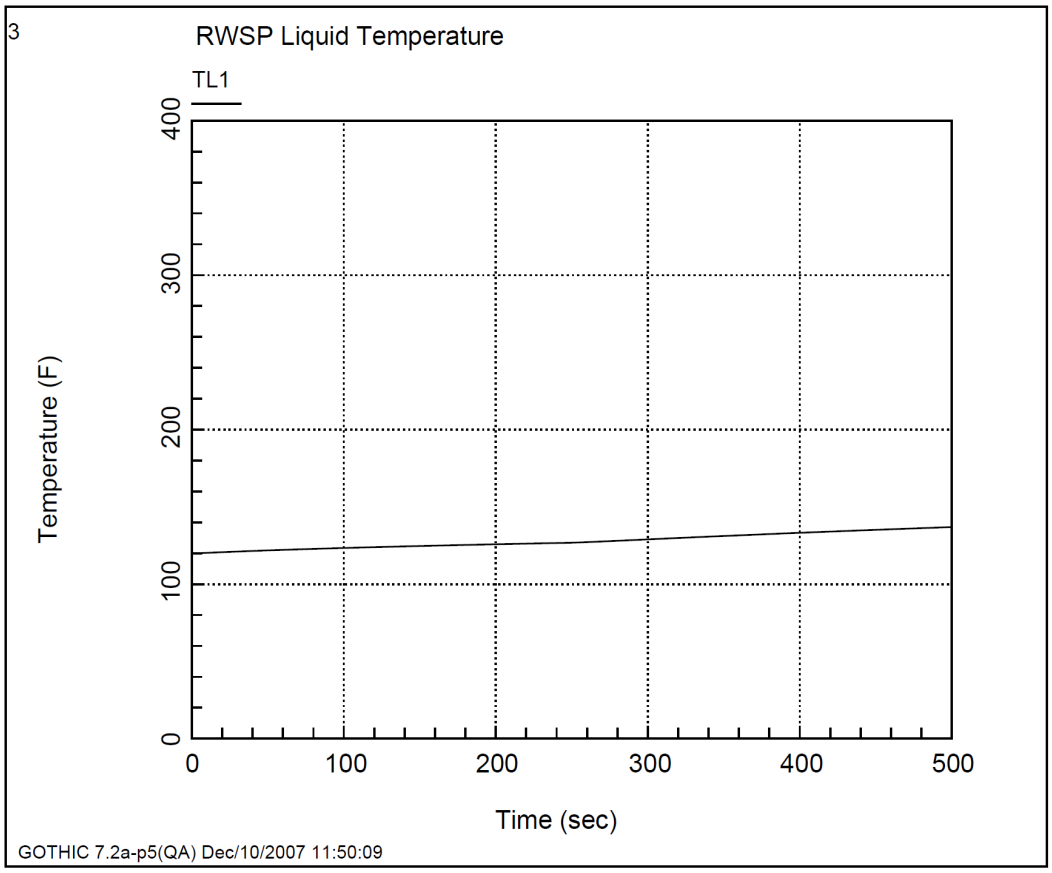

Figure 6.2.1-44 RWSP Water Temperature vs. Time for MSLB Case 2 (Double Ended Break, Reactor Power Level 75%, Offsite Power Available

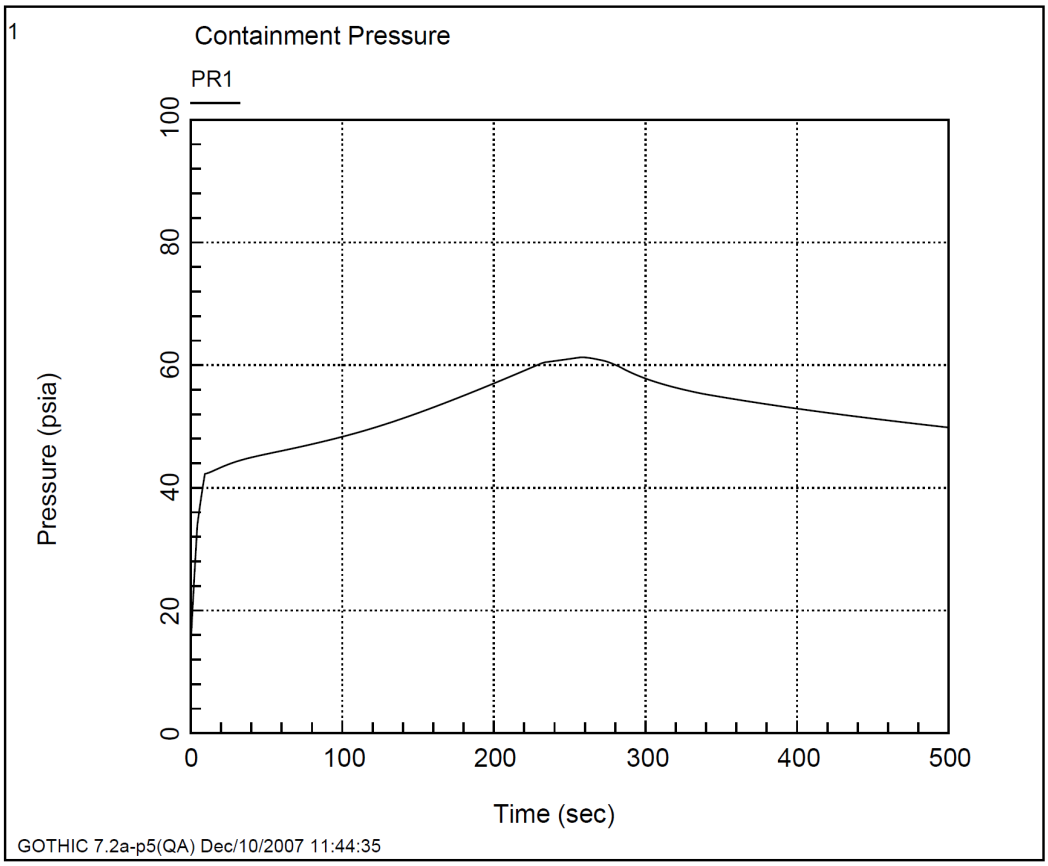

Figure 6.2.1-45 Containment Pressure vs. Time for MSLB Case 3 (Double Ended Break, Reactor Power Level 50%, Offsite Power Available)

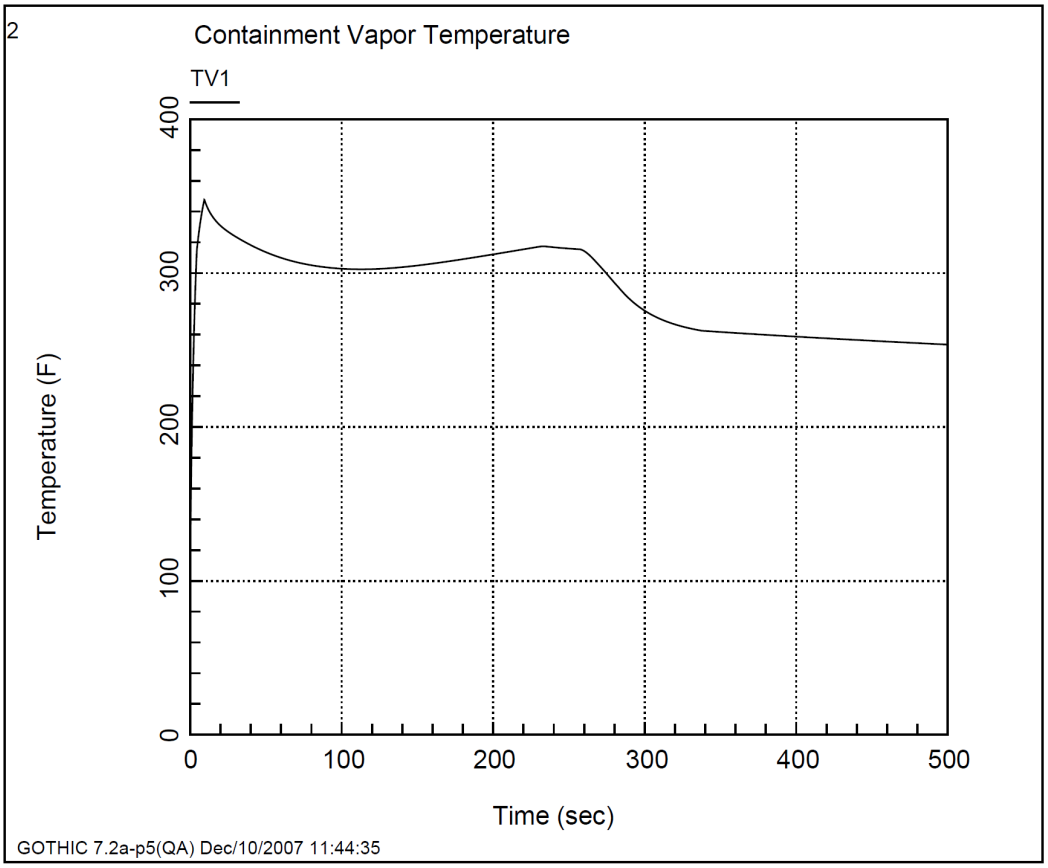

Figure 6.2.1-46 Containment Atmospheric Temperature vs. Time for MSLB Case 3 (Double Ended Break, Reactor Power Level 50%, Offsite Power Available)

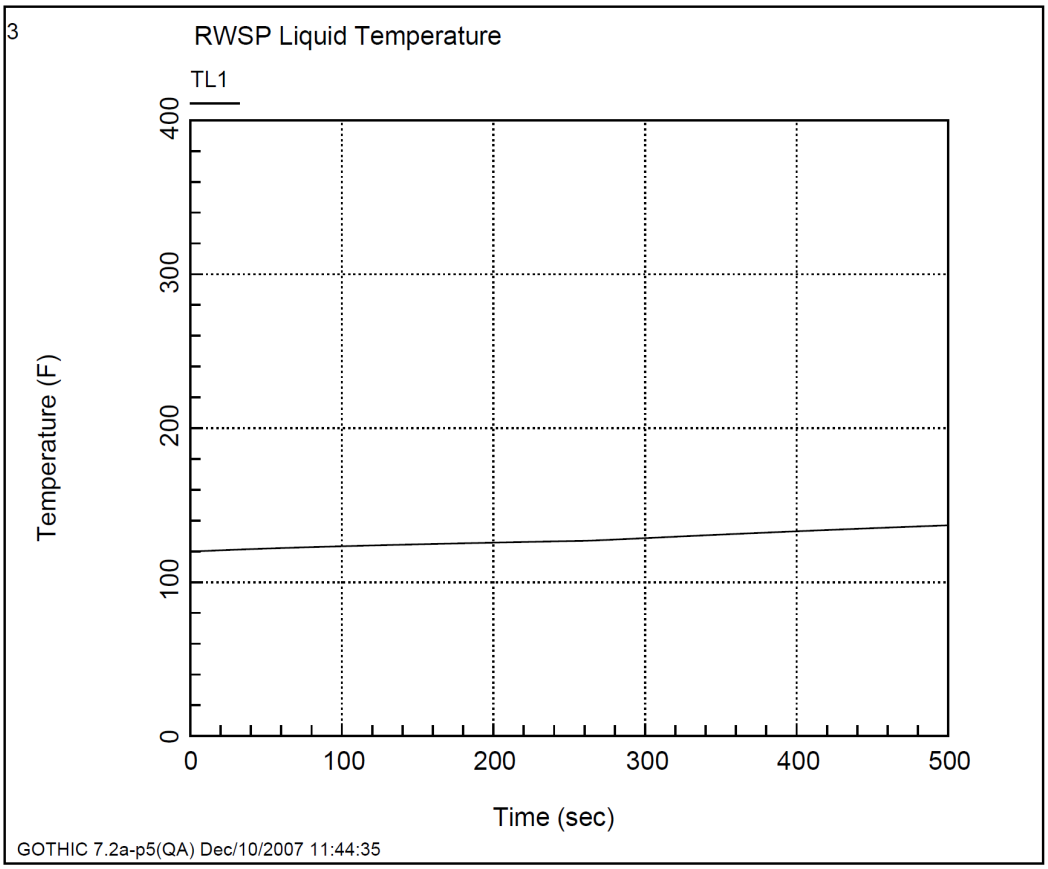

Figure 6.2.1-47 RWSP Water Temperature vs. Time for MSLB Case 3 (Double Ended Break, Reactor Power Level 50%, Offsite Power Available)

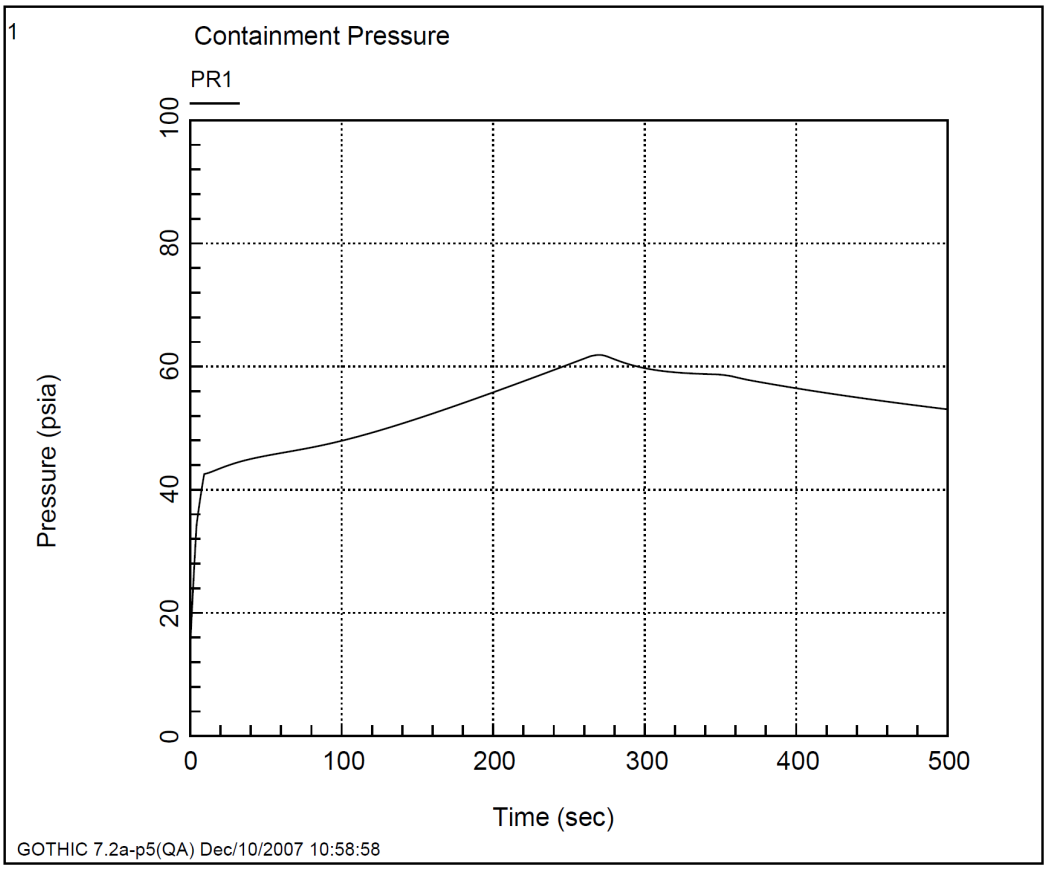

Figure 6.2.1-48 Containment Pressure vs. Time for MSLB Case 4 (Double Ended Break, Reactor Power Level 25%, Offsite Power Available)

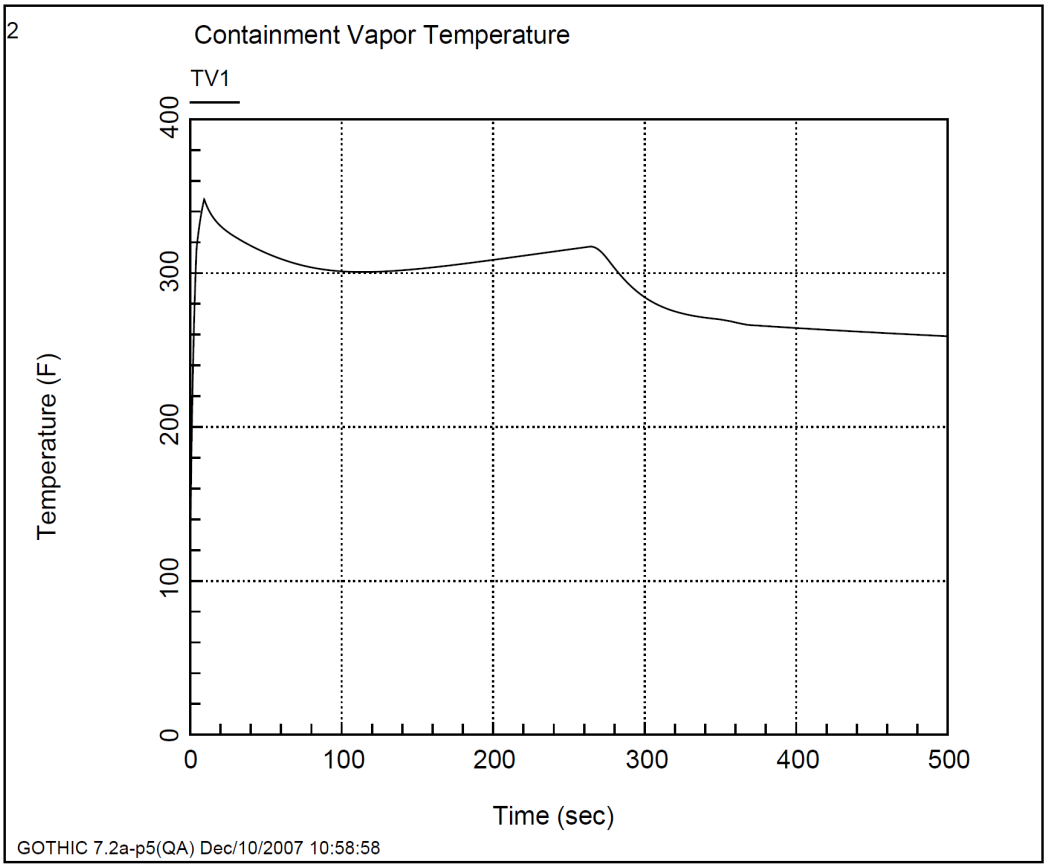

Figure 6.2.1-49 Containment Atmospheric Temperature vs. Time for MSLB Case 4 (Double Ended Break, Reactor Power Level 25%, Offsite Power Available)

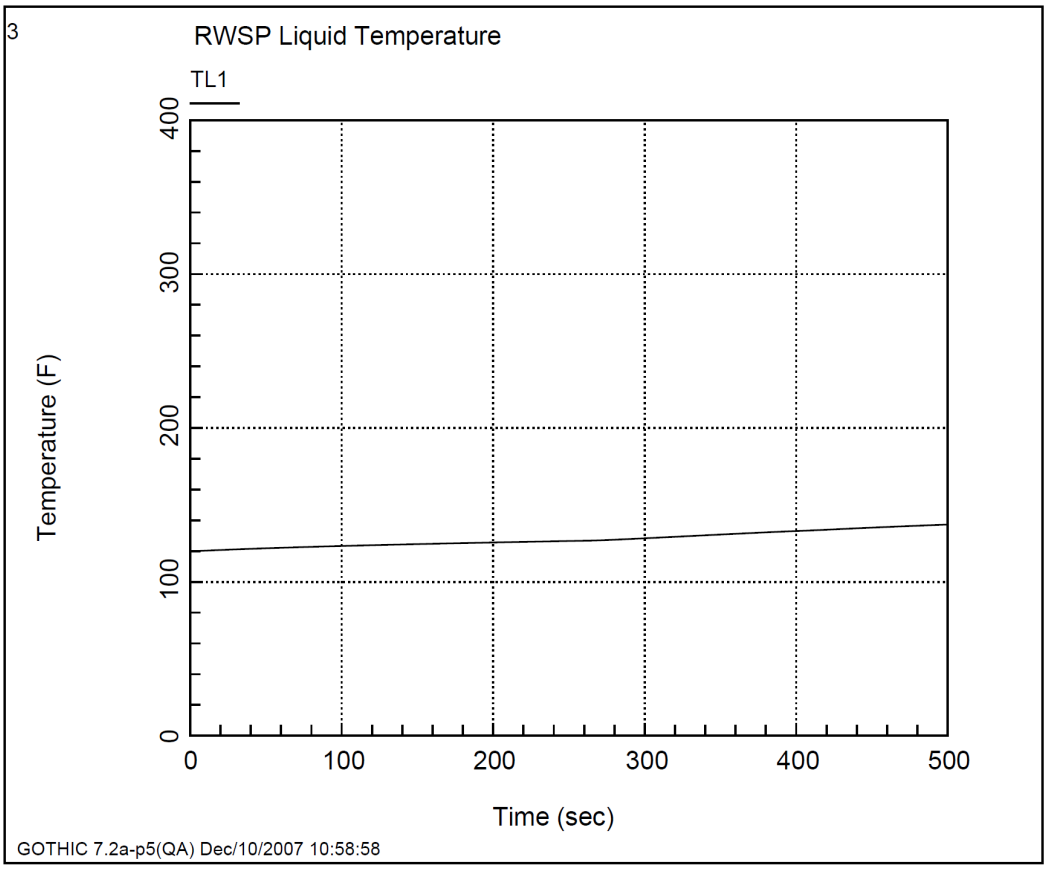

Figure 6.2.1-50 RWSP Water Temperature vs. Time for MSLB Case 4 (Double Ended Break, Reactor Power Level 25%, Offsite Power Available)

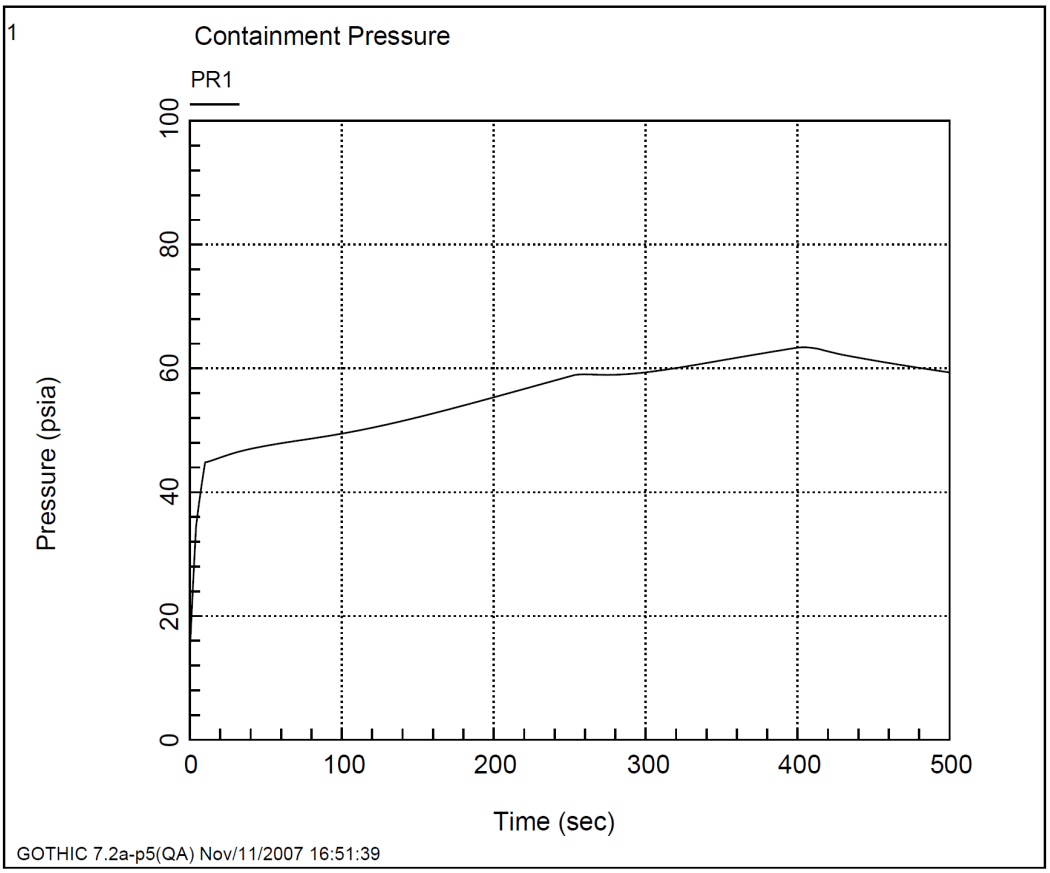

Figure 6.2.1-51 Containment Pressure vs. Time for MSLB Case 5 (Double Ended Break, Reactor Power Level 0%, Offsite Power Available)

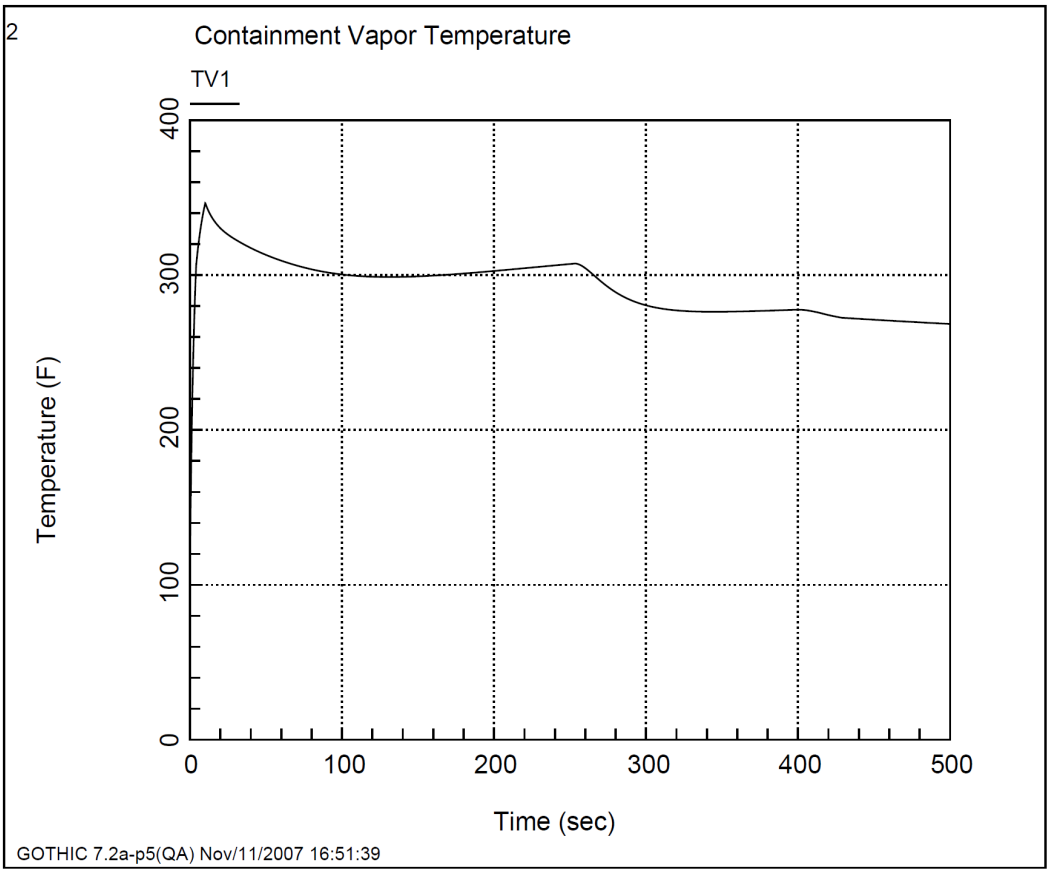

Figure 6.2.1-52 Containment Atmospheric Temperature vs. Time for MSLB Case 5 (Double Ended Break, Reactor Power Level 0%, Offsite Power Available)

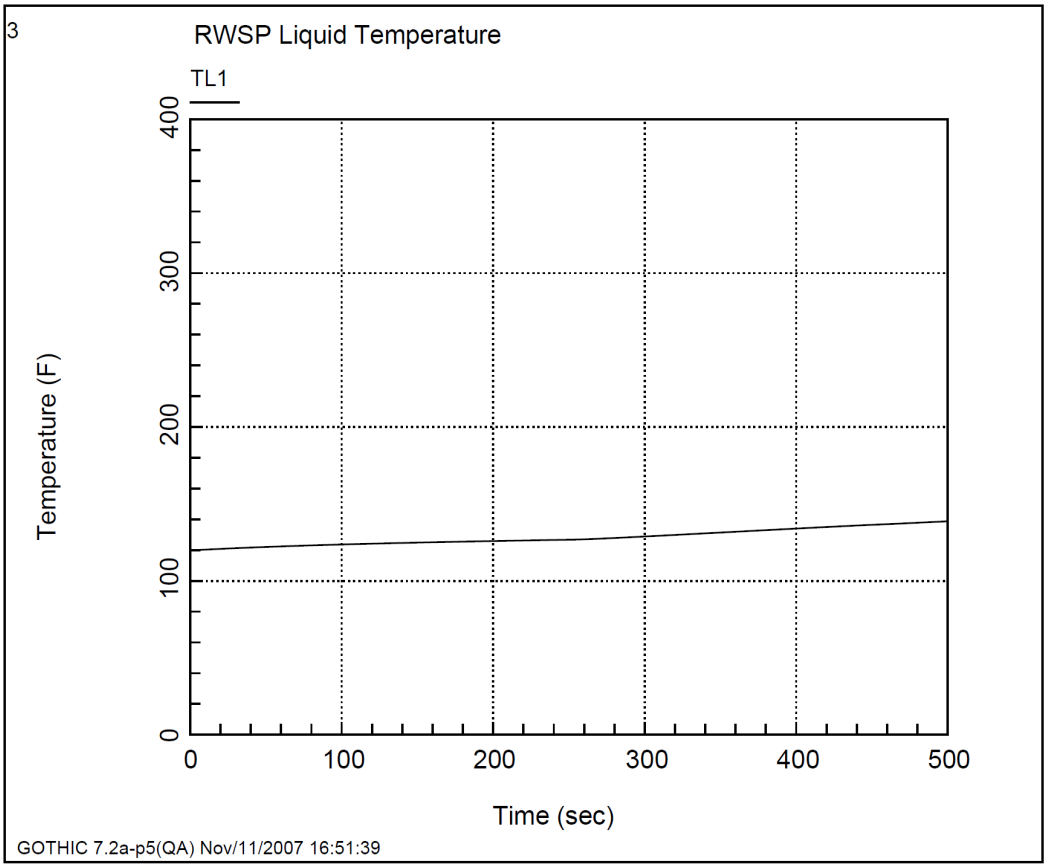

Figure 6.2.1-53 RWSP Water Temperature vs. Time for MSLB Case 5 (Double Ended Break, Reactor Power Level 0%, Offsite Power Available)

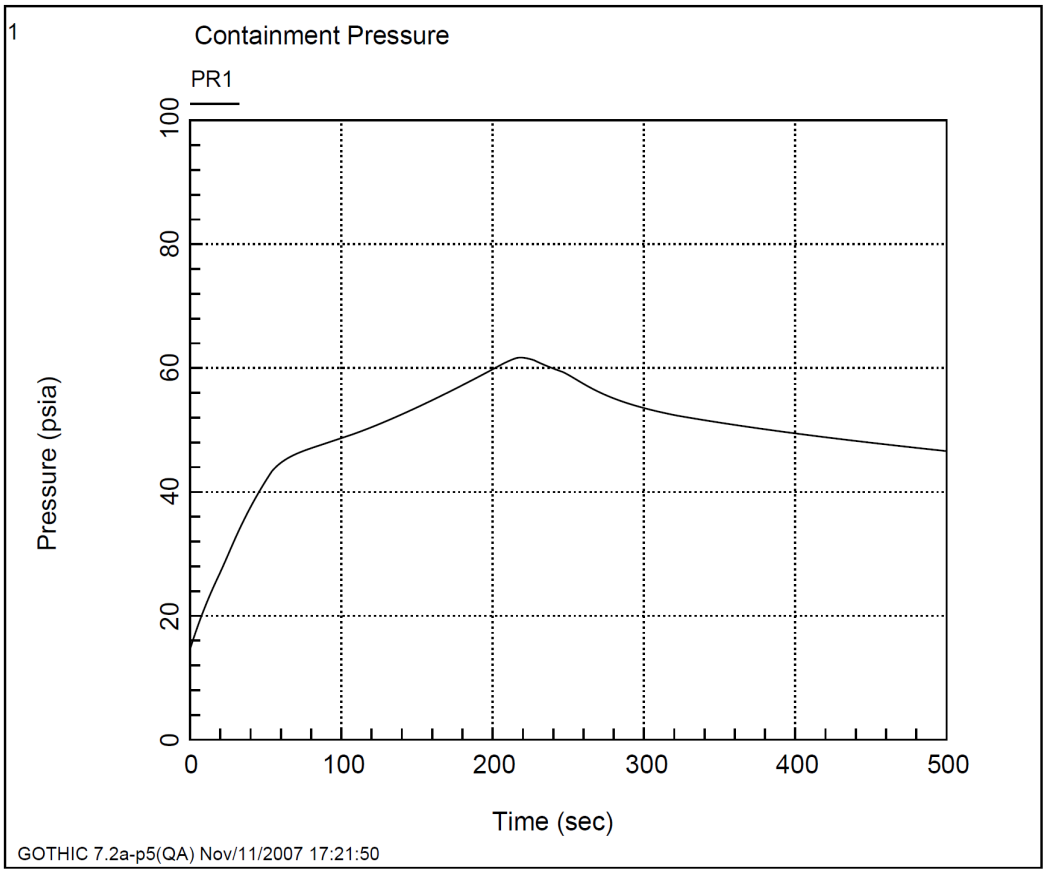

Figure 6.2.1-54 Containment Pressure vs. Time for MSLB Case 6 (1.65ft^2 Split Break, Reactor Power Level 102%, Offsite Power Available)

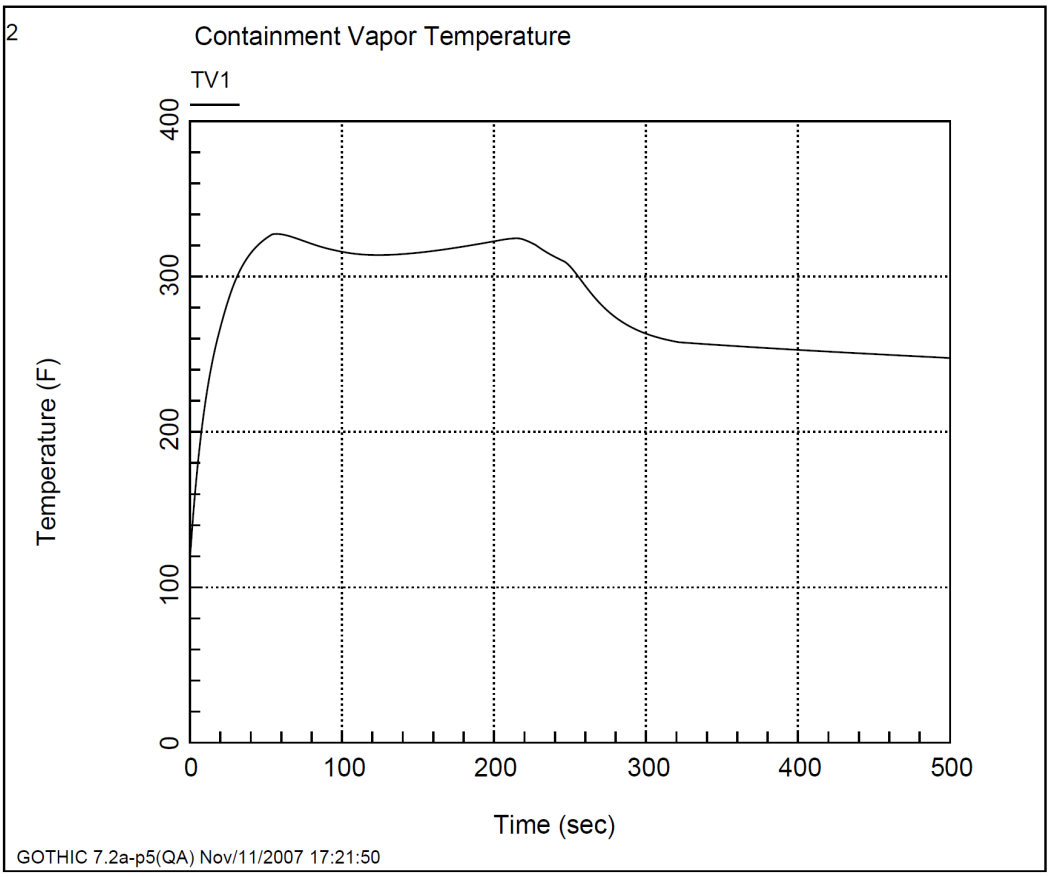

Figure 6.2.1-55 Containment Atmospheric Temperature vs. Time for MSLB Case 6 (1.65ft^2 Split Break, Reactor Power Level 102%, Offsite Power Available)

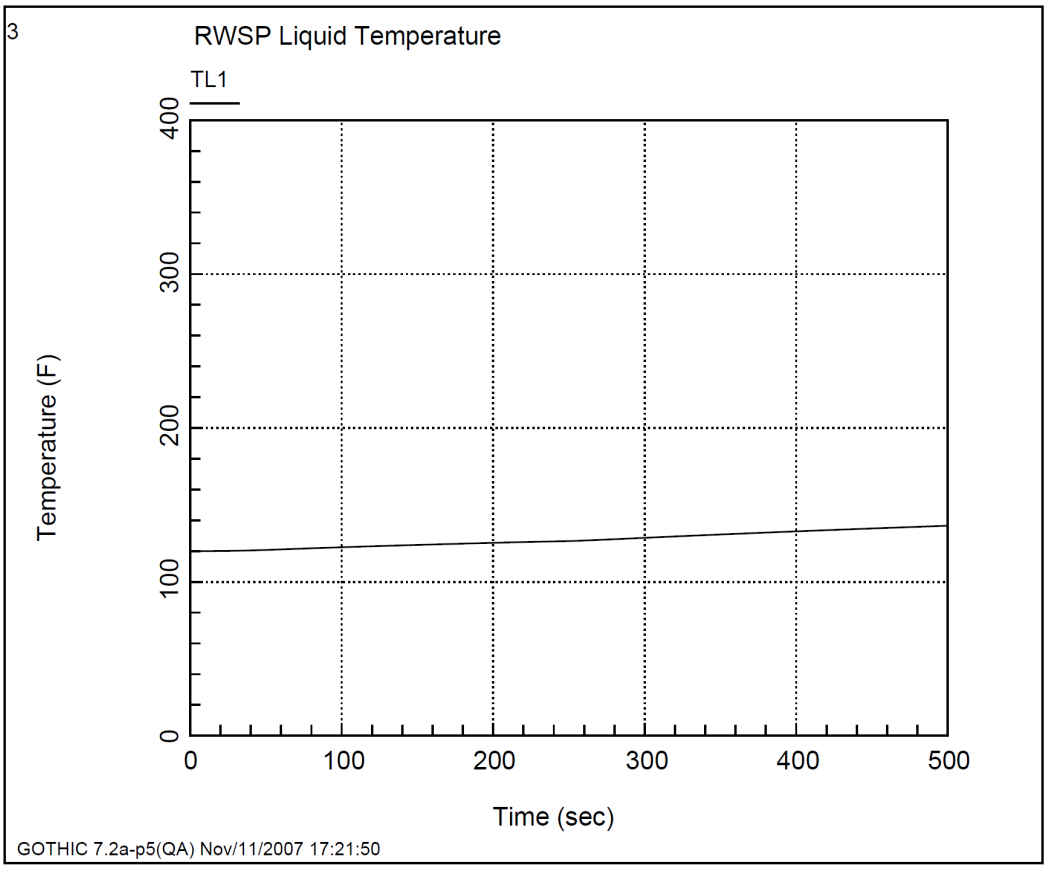

Figure 6.2.1-56 RWSP Water Temperature vs. Time for MSLB Case 6 (1.65ft^2 Split Break, Reactor Power Level 102%, Offsite Power Available)

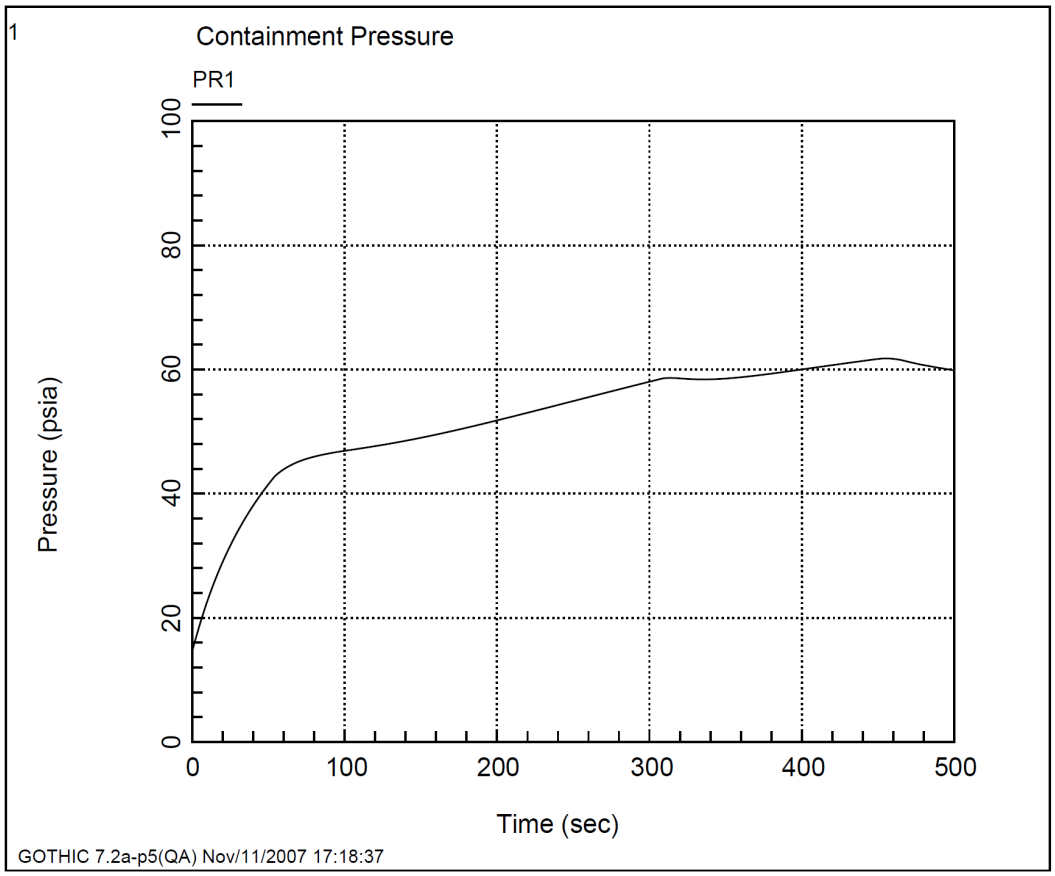

Figure 6.2.1-57 Containment Pressure vs. Time for MSLB Case 7 (1.71ft^2 Split Break, Reactor Power Level 0%, Offsite Power Available)

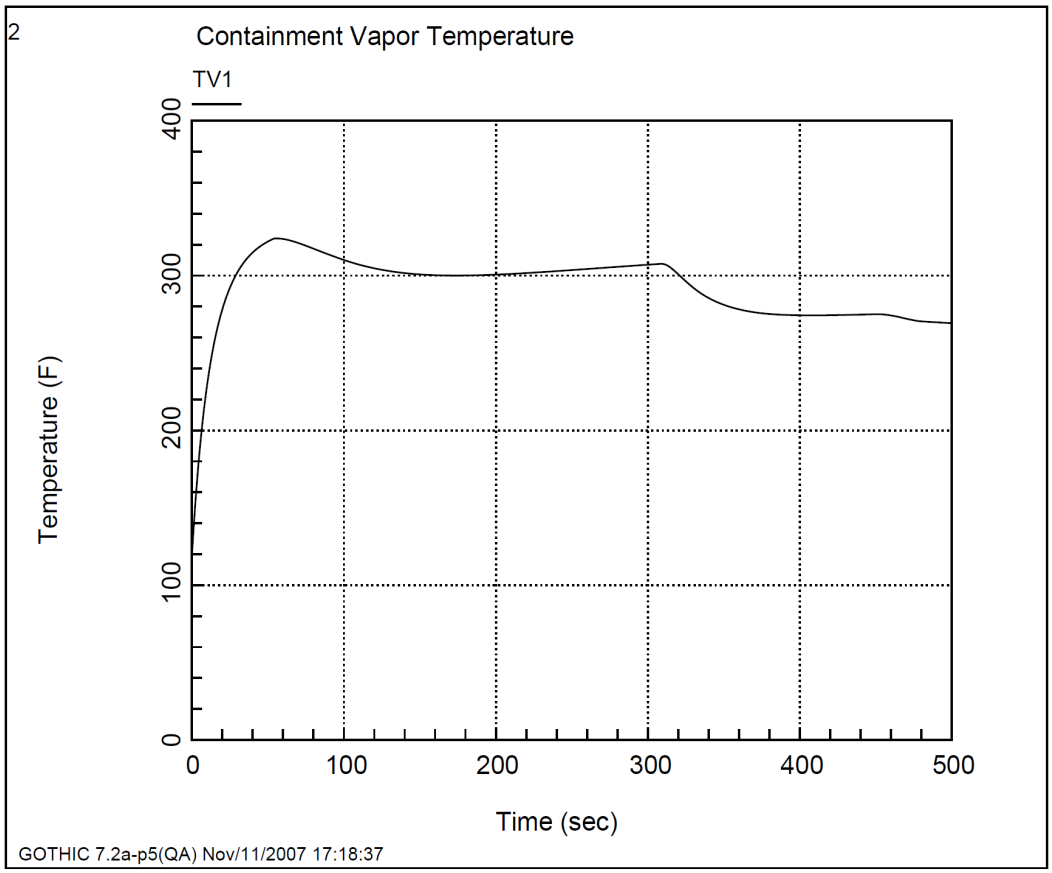

Figure 6.2.1-58 Containment Atmospheric Temperature vs. Time for MSLB Case 7 (1.71ft^2 Split Break, Reactor Power Level 0%, Offsite Power Available)

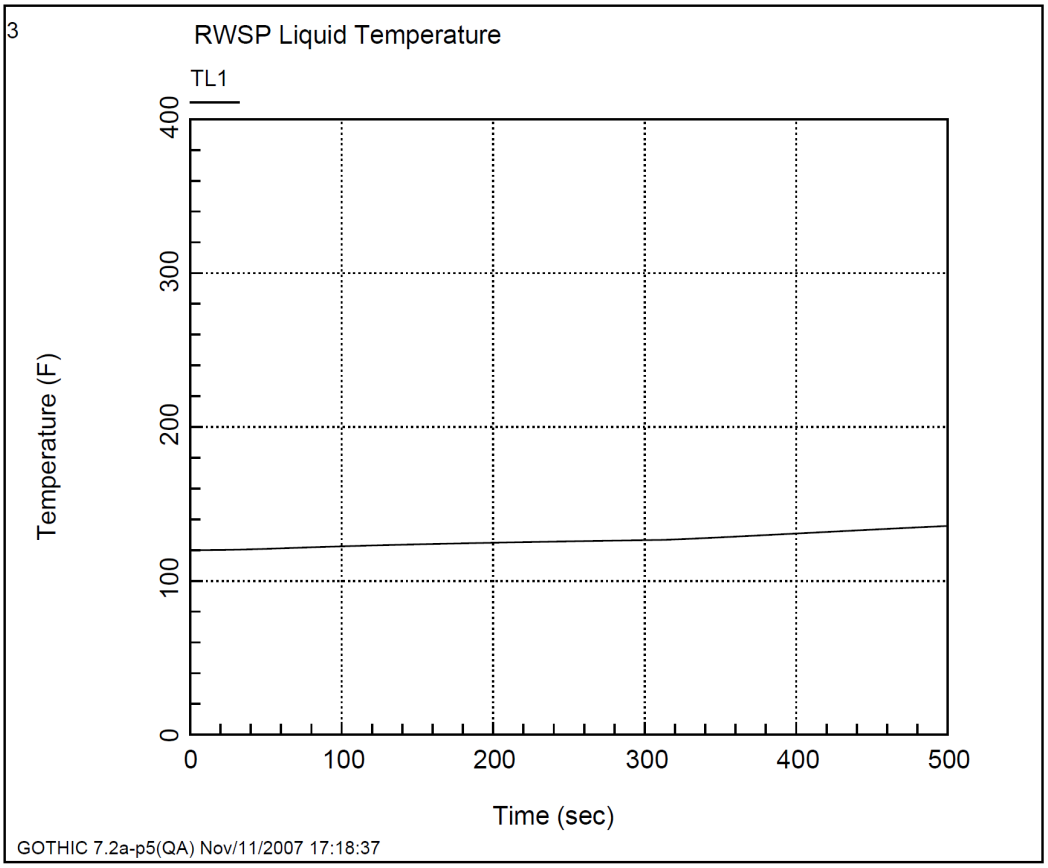

Figure 6.2.1-59 RWSP Water Temperature vs. Time for MSLB Case 7 (1.71ft^2 Split Break, Reactor Power Level 0%, Offsite Power Available)

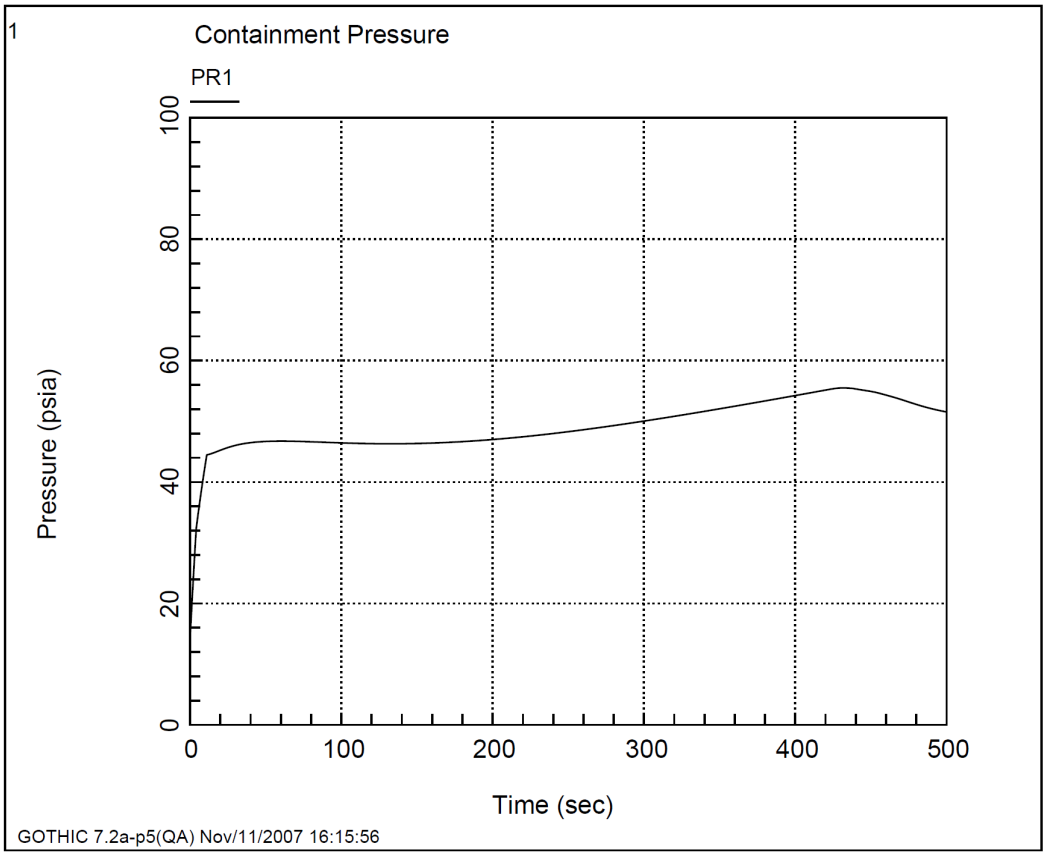

Figure 6.2.1-60 Containment Pressure vs. Time for MSLB Case 8 (Double Ended Break, Reactor Power Level 102%, Loss of Offsite Power)

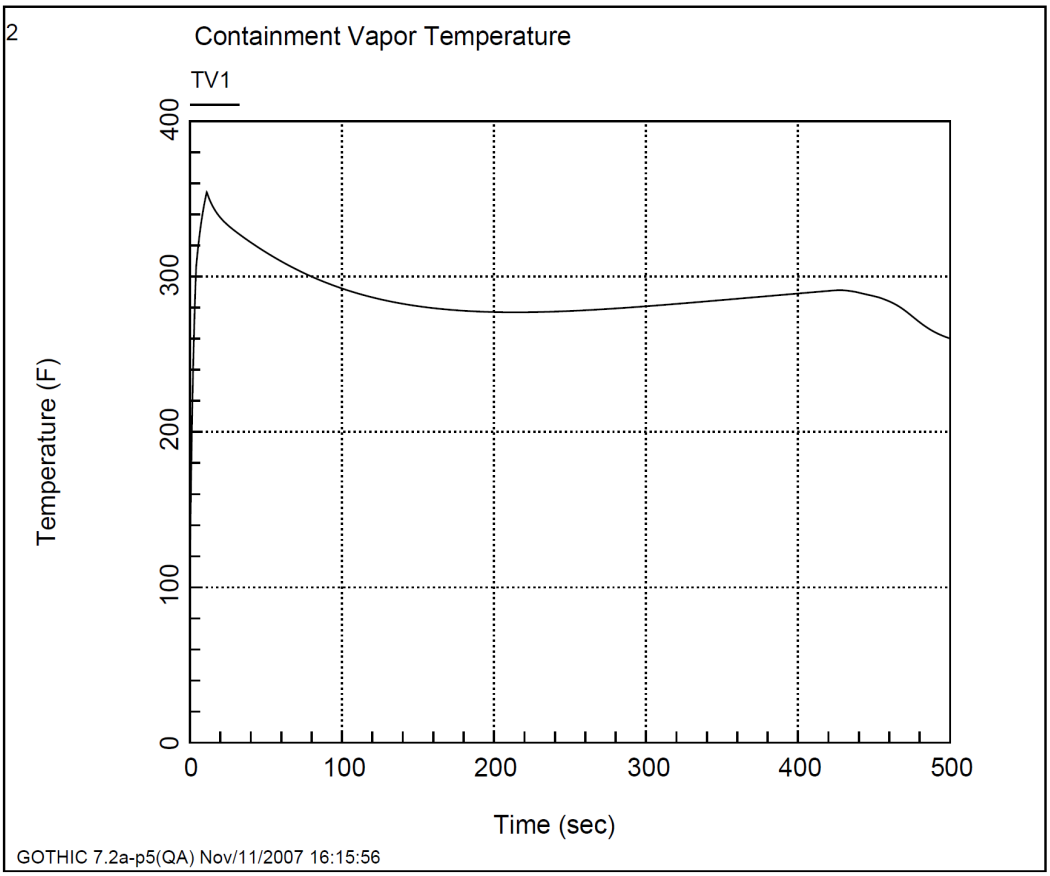

Figure 6.2.1-61 Containment Atmospheric Temperature vs. Time for MSLB Case 8 (Double Ended Break, Reactor Power Level 102%, Loss of Offsite Power)

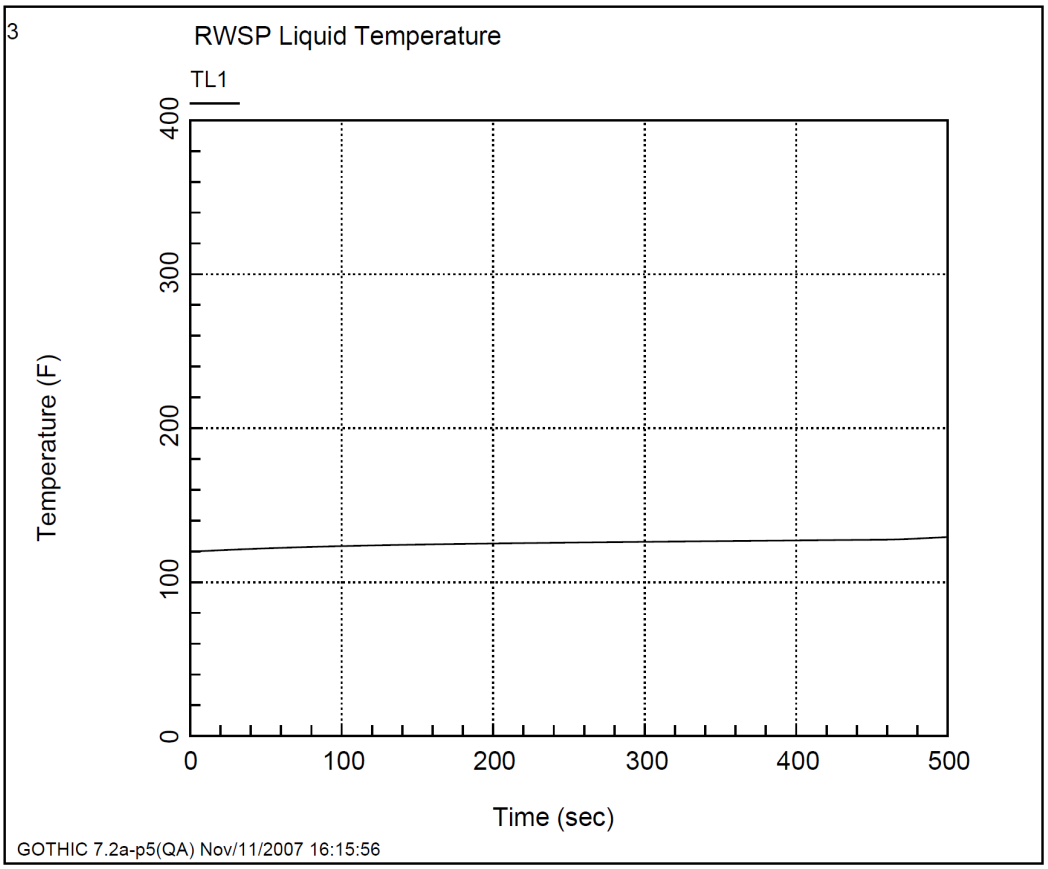

Figure 6.2.1-62 RWSP Water Temperature vs. Time for MSLB Case 8 (Double Ended Break, Reactor Power Level 102%, Loss of Offsite Power)

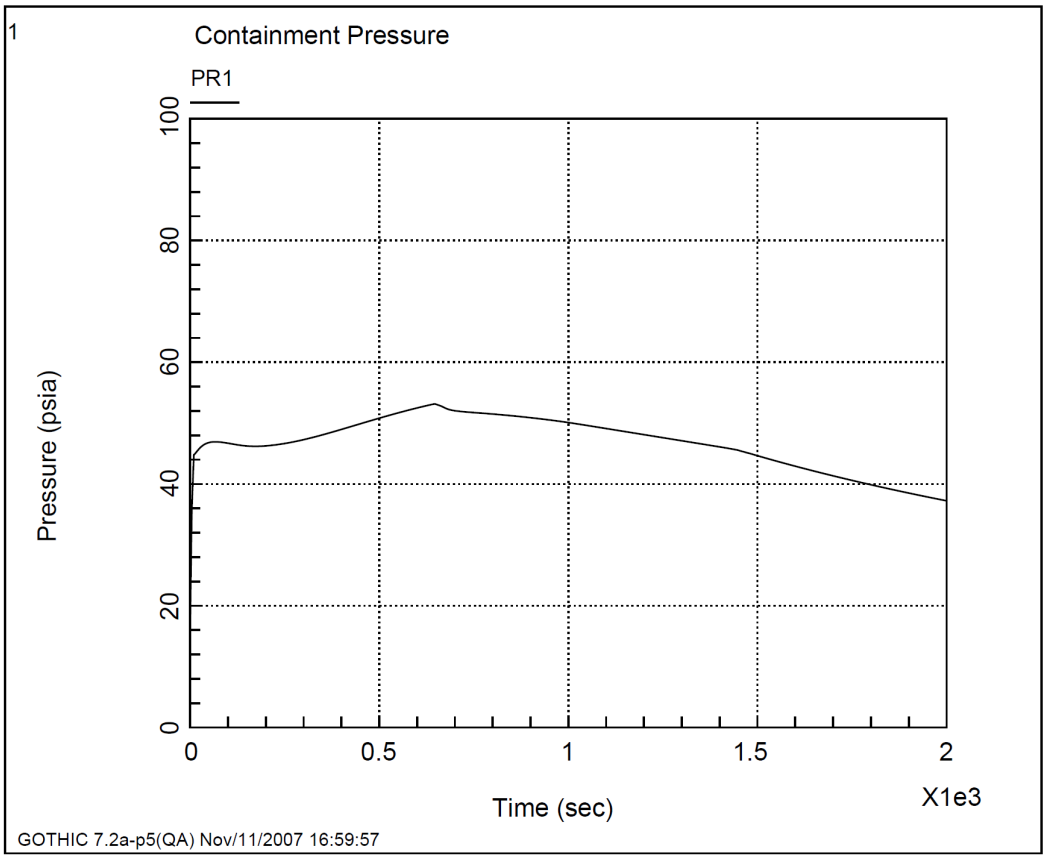

Figure 6.2.1-63 Containment Pressure vs. Time for MSLB Case 9 (Double Ended Break, Reactor Power Level 0%, Loss of Offsite Power)

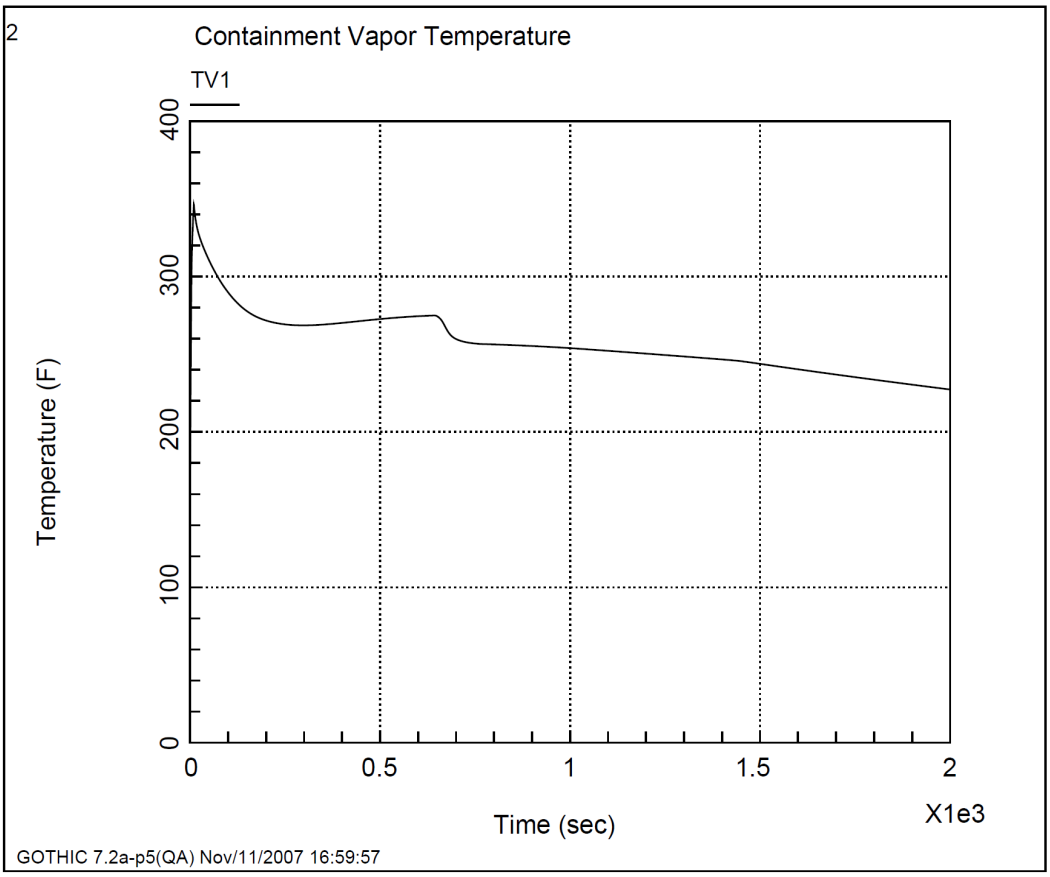

Figure 6.2.1-64 Containment Atmospheric Temperature vs. Time for MSLB Case 9 (Double Ended Break, Reactor Power Level 0%, Loss of Offsite Power)

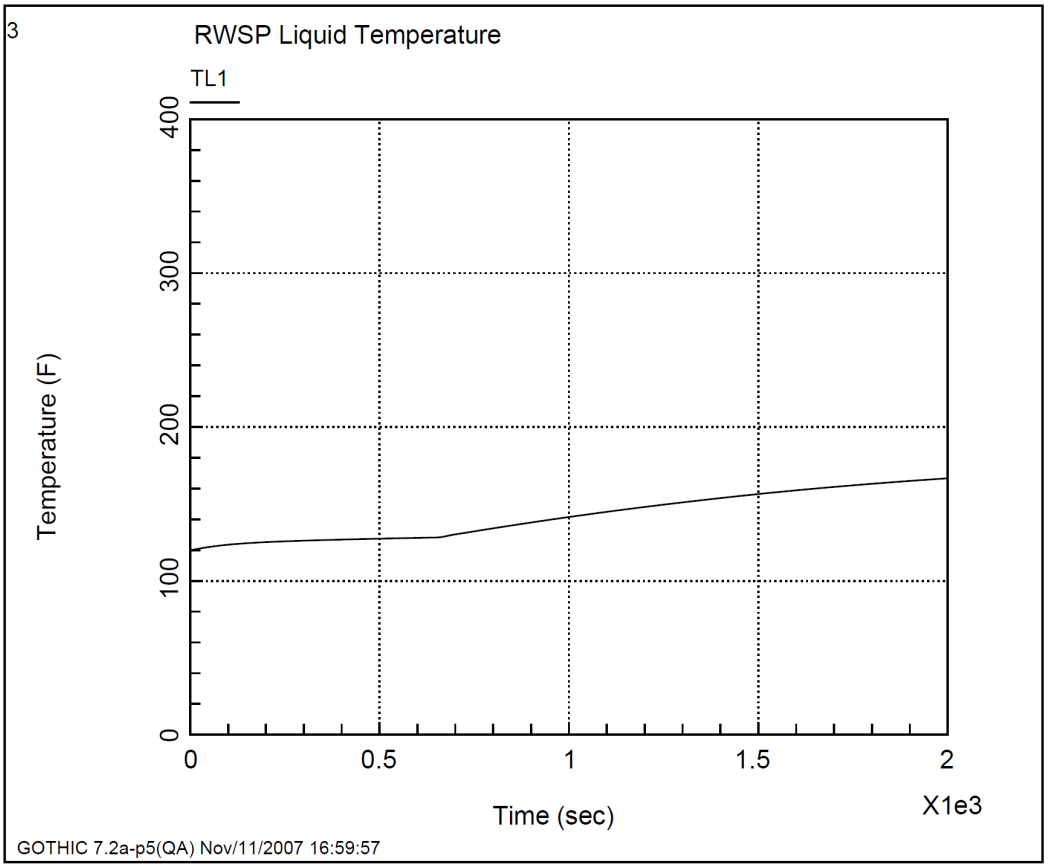

Figure 6.2.1-65 RWSP Water Temperature vs. Time for MSLB Case 9 (Double Ended Break, Reactor Power Level 0%, Loss of Offsite Power)

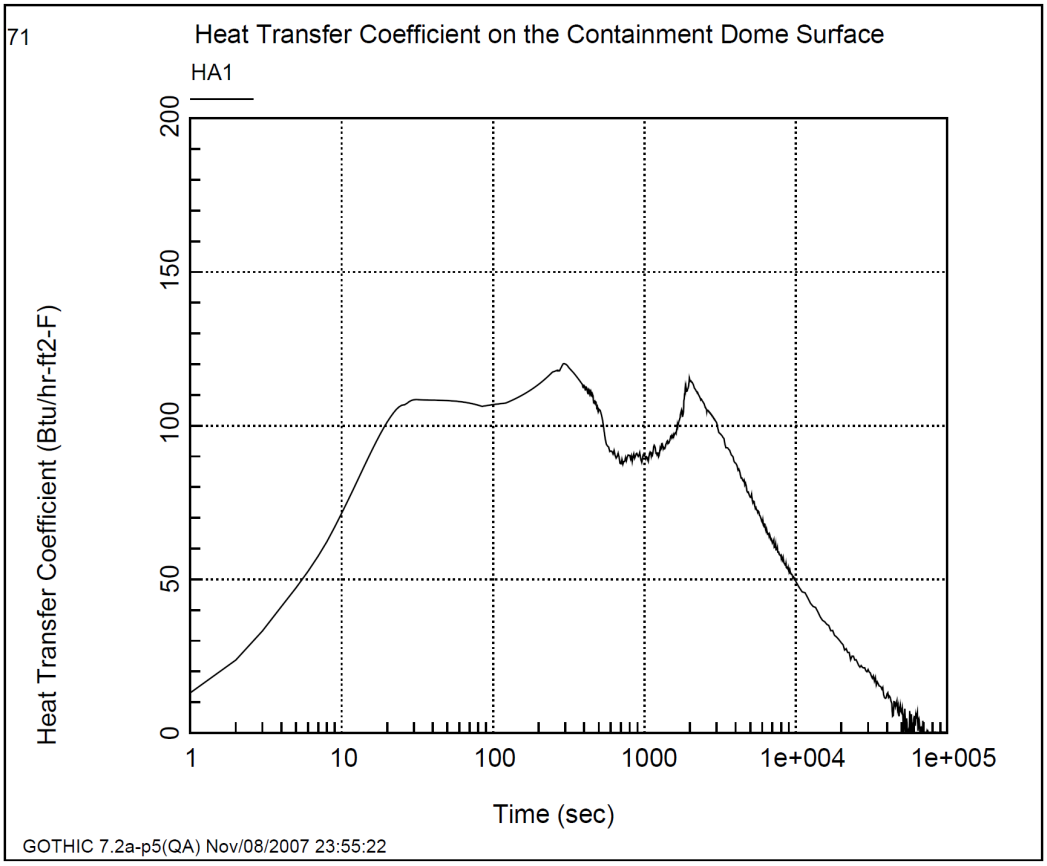

Figure 6.2.1-66 Condensing Heat Transfer Coefficient on the Typical Structure as a Function of Time for the Most Severe DEPSG Break (C_D=1.0)

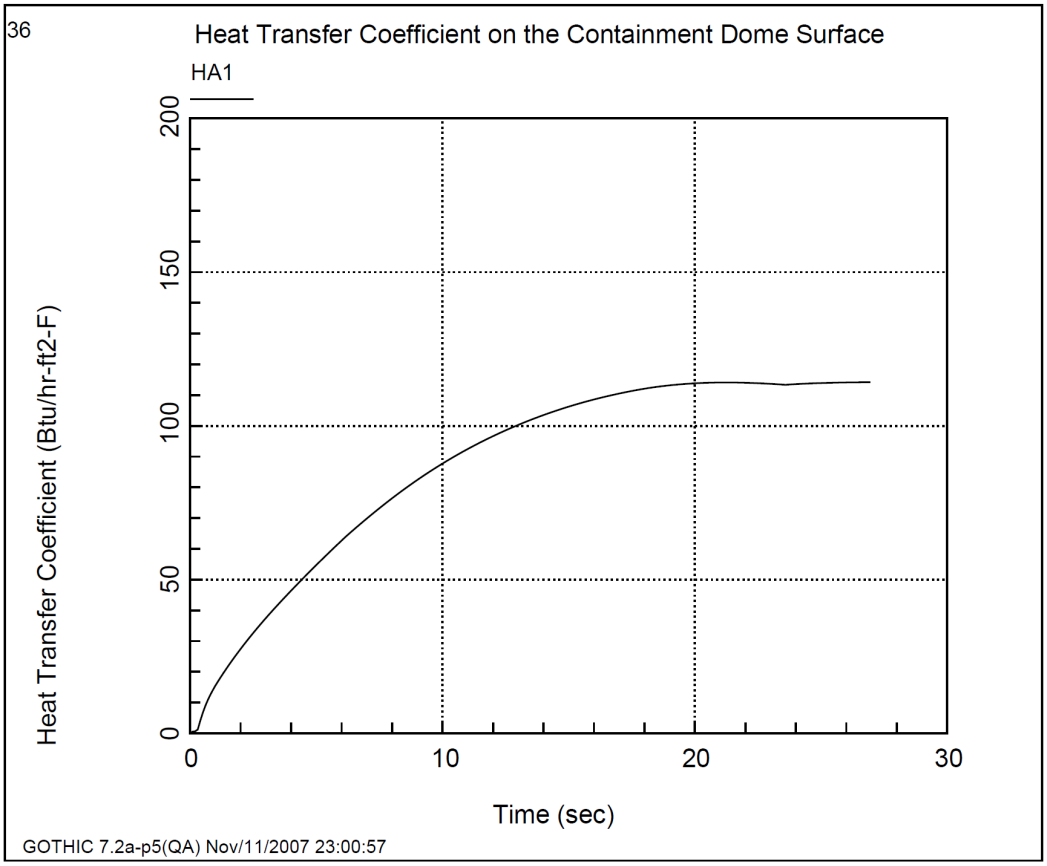

Figure 6.2.1-67 Condensing Heat Transfer Coefficient on the Typical Structure vs. Time for the Most Severe DEHLG Break (C_D=1.0)

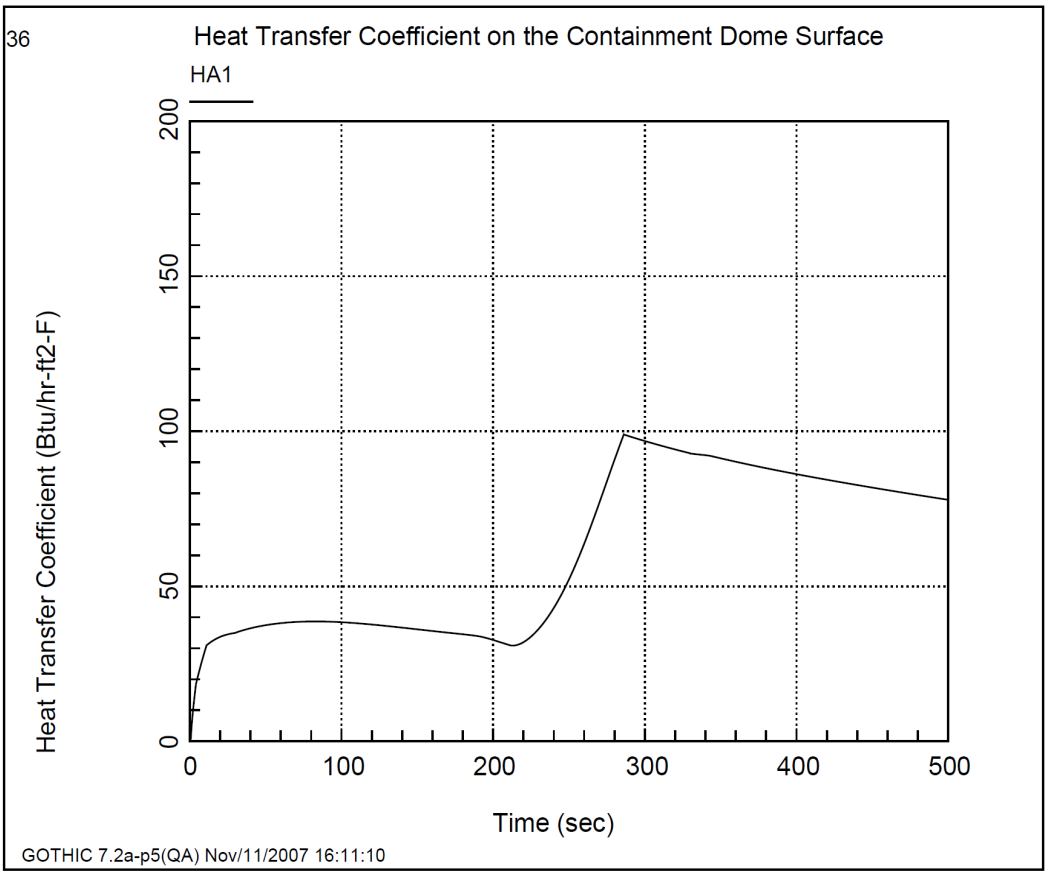

Figure 6.2.1-68 Condensing Heat Transfer Coefficient on the Typical Structure vs. Time for the MSLB case with the Most Severe Average Containment Temperature

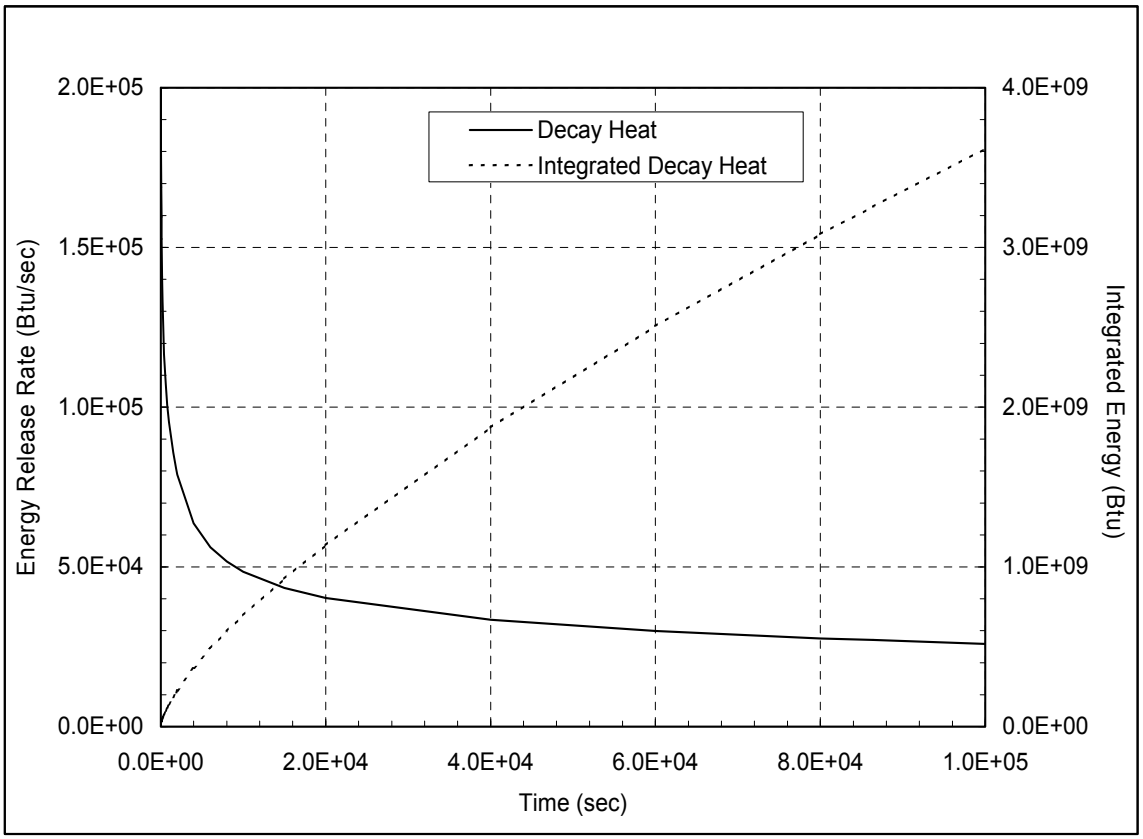

Figure 6.2.1-69 Energy Release Rate and Integrated Energy Released for the Decay Heat

Security-Related Information – Withhold Under 10 CFR 2.390

Figure 6.2.1-70 Reactor Cavity Sectional View

Security-Related Information – Withhold Under 10 CFR 2.390

Figure 6.2.1-71 Reactor Cavity Plan View

Security-Related Information – Withhold Under 10 CFR 2.390

Figure 6.2.1-72 Steam Generator Subcompartment Sectional View

Security-Related Information – Withhold Under 10 CFR 2.390

Figure 6.2.1-73 Steam Generator Subcompartment Plan View

Security-Related Information – Withhold Under 10 CFR 2.390

Figure 6.2.1-74 Pressurizer Subcompartment Sectional View

Security-Related Information – Withhold Under 10 CFR 2.390

Figure 6.2.1-75 Pressurizer Subcompartment Plan View

Security-Related Information – Withhold Under 10 CFR 2.390

Figure 6.2.1-76 Pressurizer Spray Valve Rooms Sectional View

Security-Related Information – Withhold Under 10 CFR 2.390

Figure 6.2.1-77 Pressurizer Spray Valve Rooms Plan View

Security-Related Information – Withhold Under 10 CFR 2.390

Figure 6.2.1-78 Regenerative Heat Exchanger Room Plan View

Security-Related Information – Withhold Under 10 CFR 2.390

Figure 6.2.1-79 Letdown Heat Exchanger Room Plan View

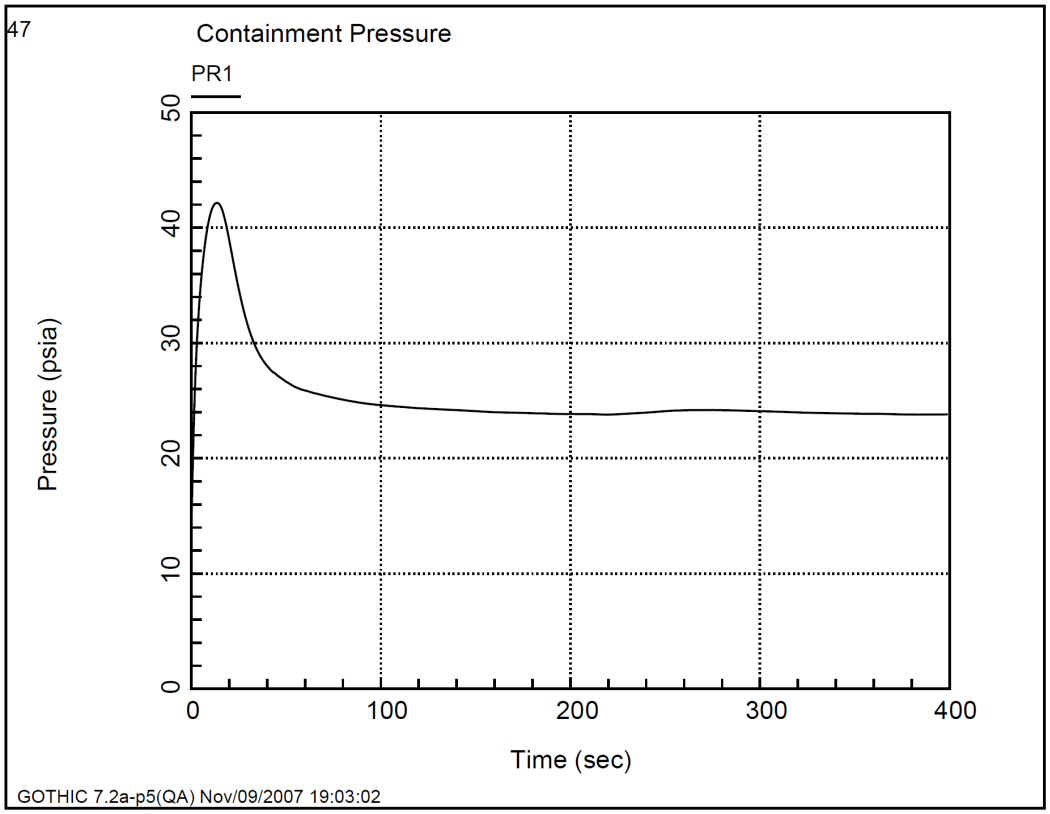

Figure 6.2.1-80 Containment Pressure vs. Time for Postulated RCS DEGB Transient Employed in Minimum Containment Pressure Analyses for ECCS Performance Evaluations

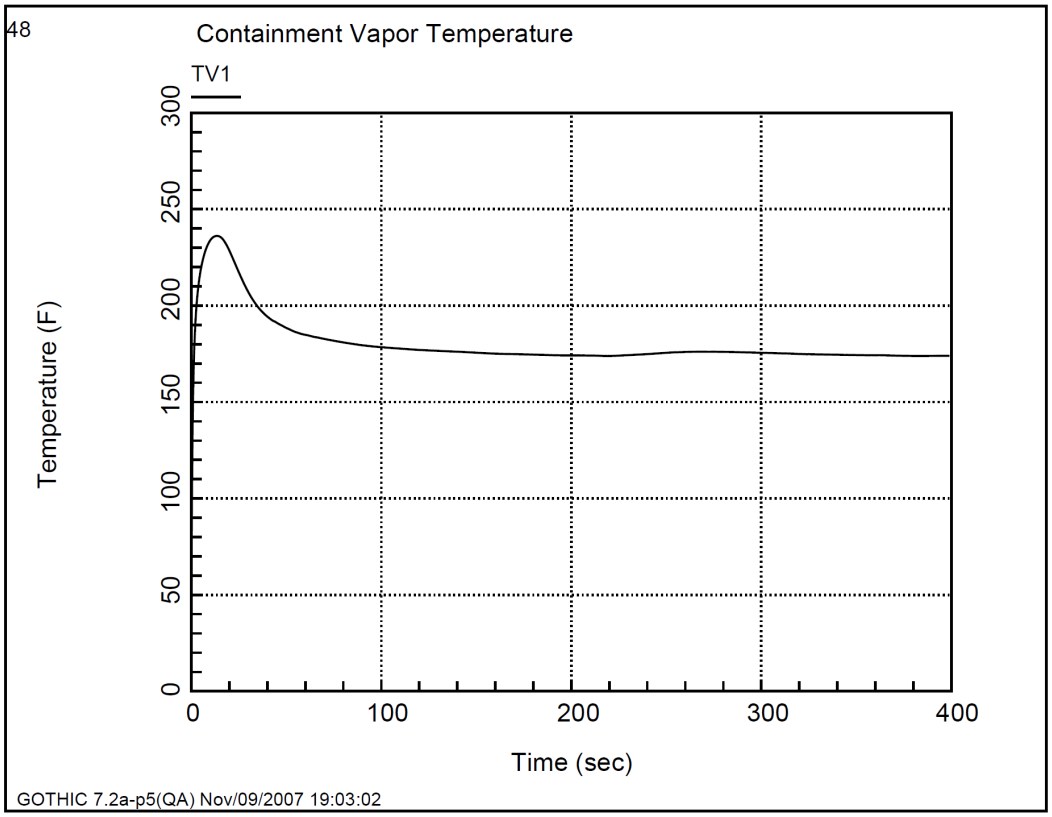

Figure 6.2.1-81 Containment Atmospheric Temperature vs. Time for Postulated RCS DEGB Transient Employed in Minimum Containment Pressure Analyses for ECCS Performance Evaluations

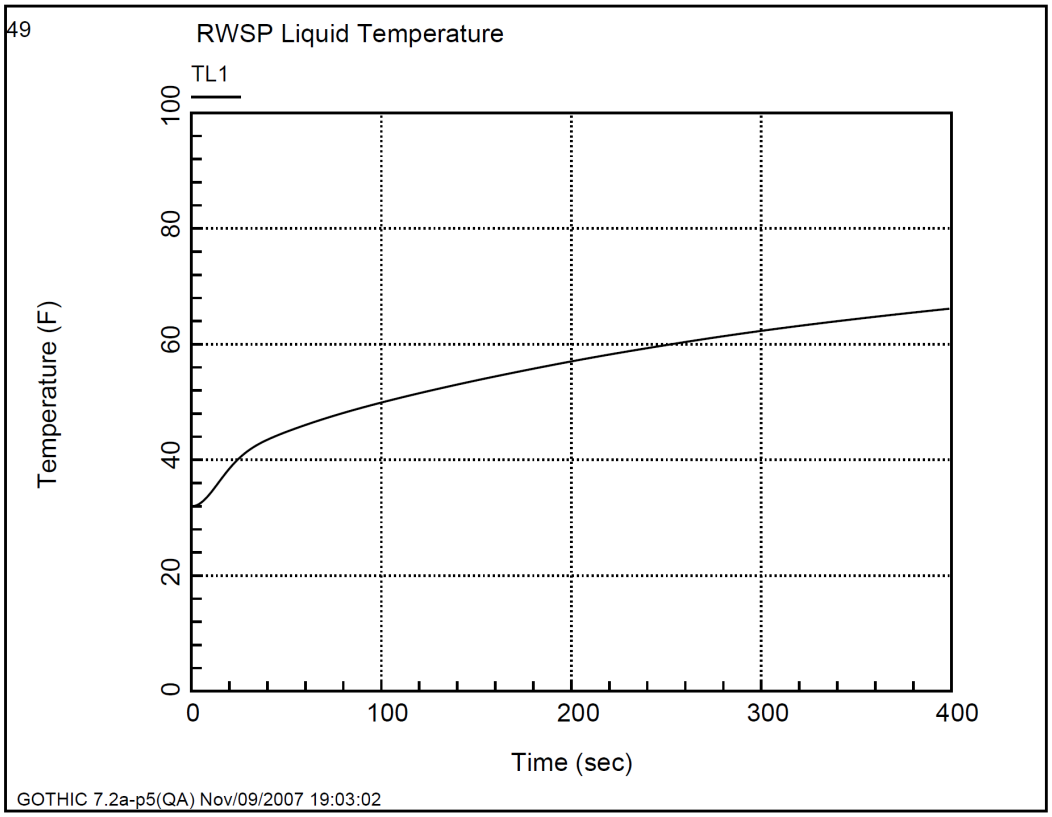

Figure 6.2.1-82 RWSP Water Temperature vs. Time for Postulated RCS DEGB Transient Employed in Minimum Containment Pressure Analyses for ECCS Performance Evaluations

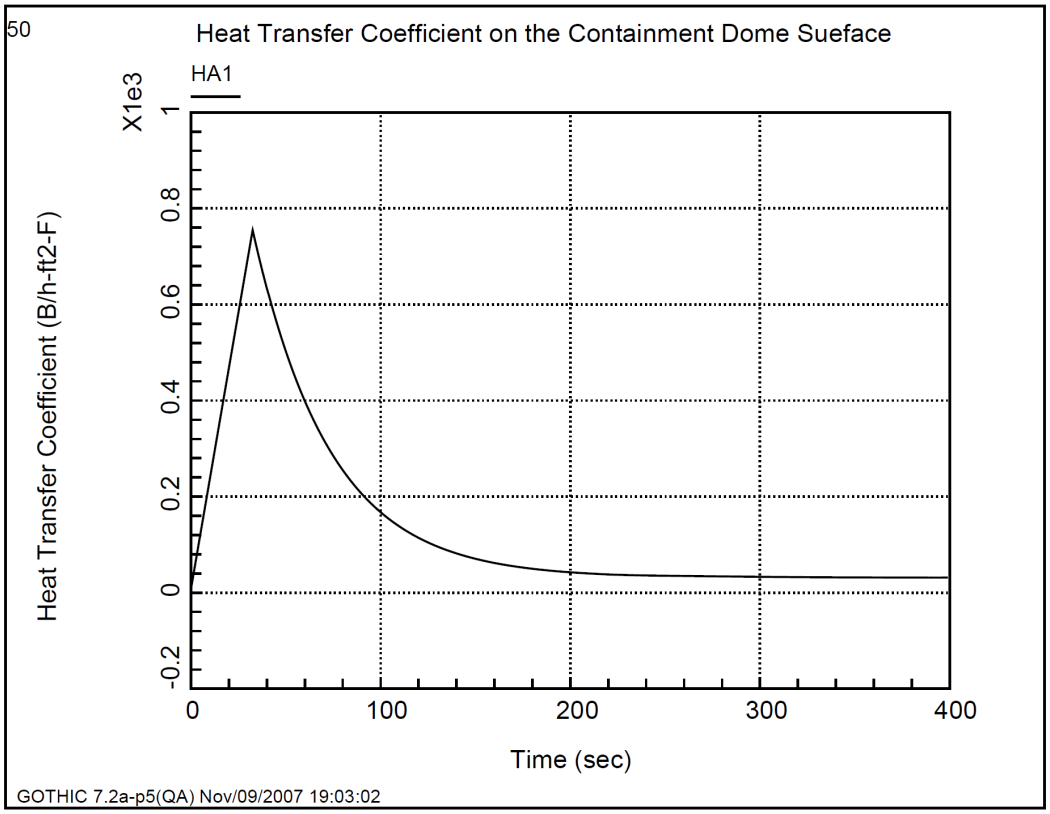

Figure 6.2.1-83 Condensing Heat Transfer Coefficient on the Typical Structure as a Function of Time for Postulated RCS DEGB Transient Employed in Minimum Containment Pressure Analyses

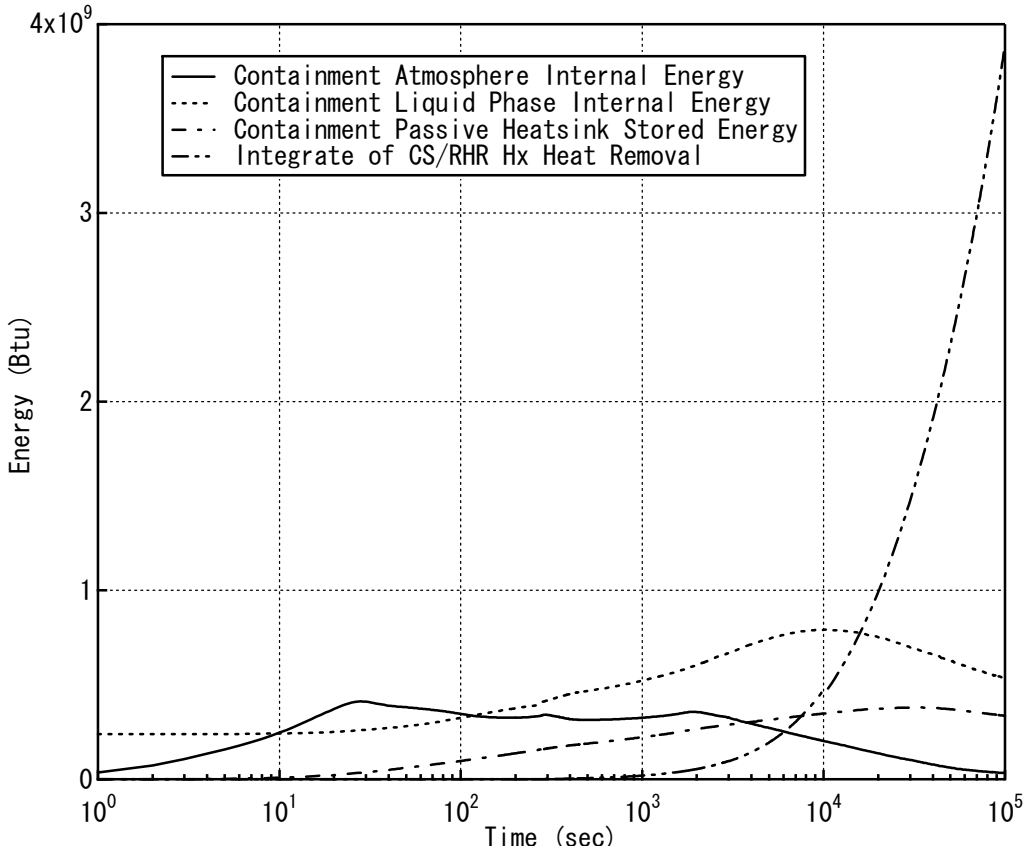

Figure 6.2.1-84 Containment Energy Distribution Transient for DEPSG Break (C_D=1.0)

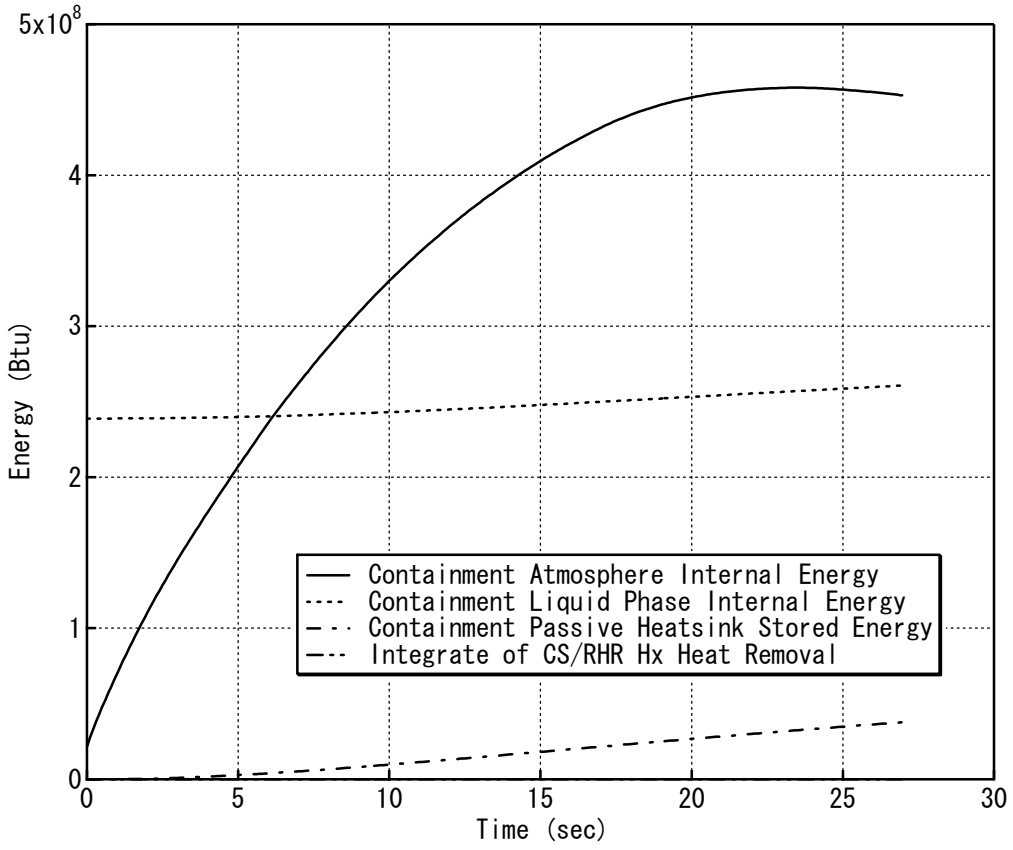

Figure 6.2.1-85 Containment Energy Distribution Transient for DEHLG Break (C_D=1.0)

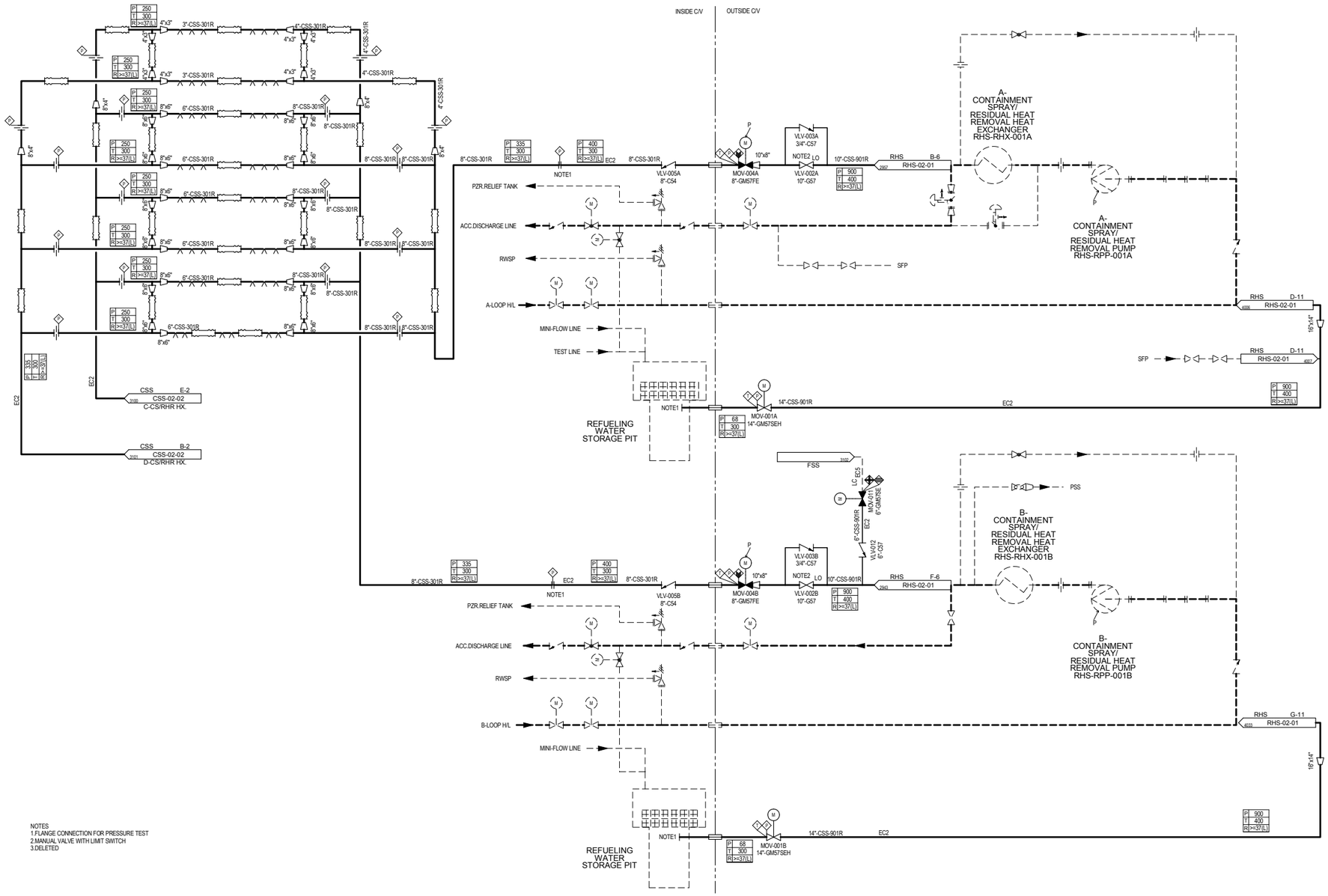

Figure 6.2.2-1 Flow Diagram of the Containment Spray System (Sheet 1 of 2)

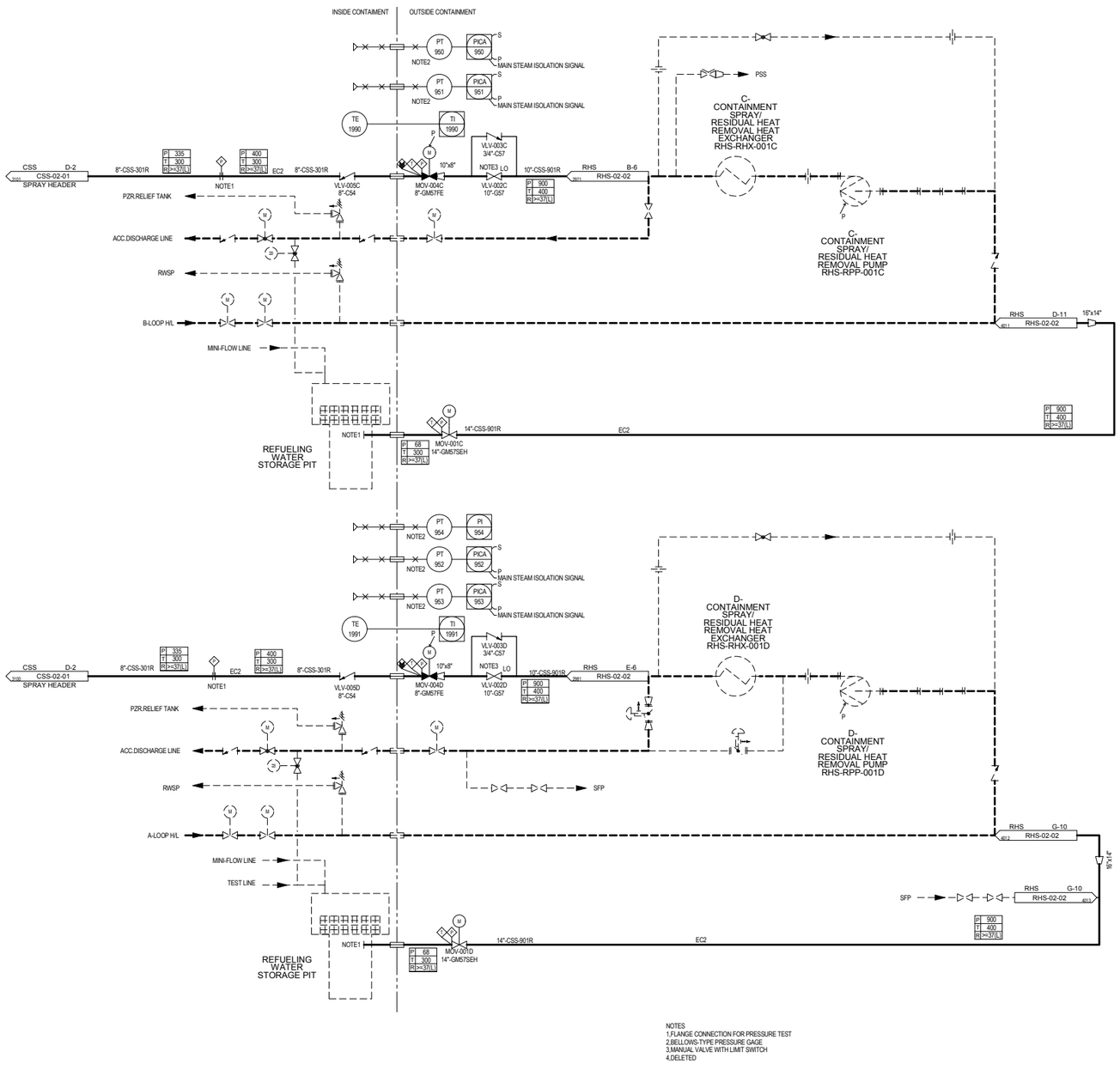

Figure 6.2.2-1 Flow Diagram of the Containment Spray System (Sheet 2 of 2)

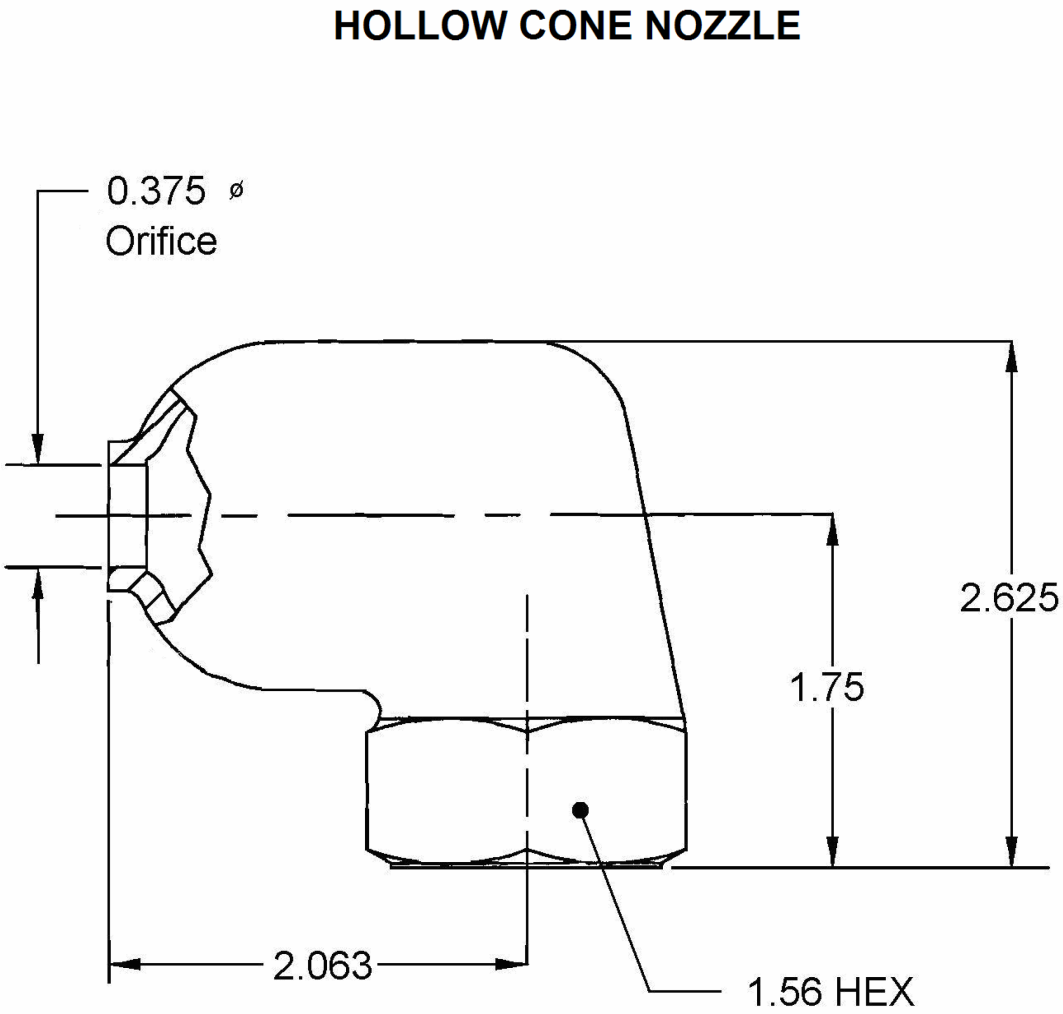

Notes: Dimensions shown are approximate all dimensions are in inches

Figure 6.2.2-2 Containment Spray Nozzle

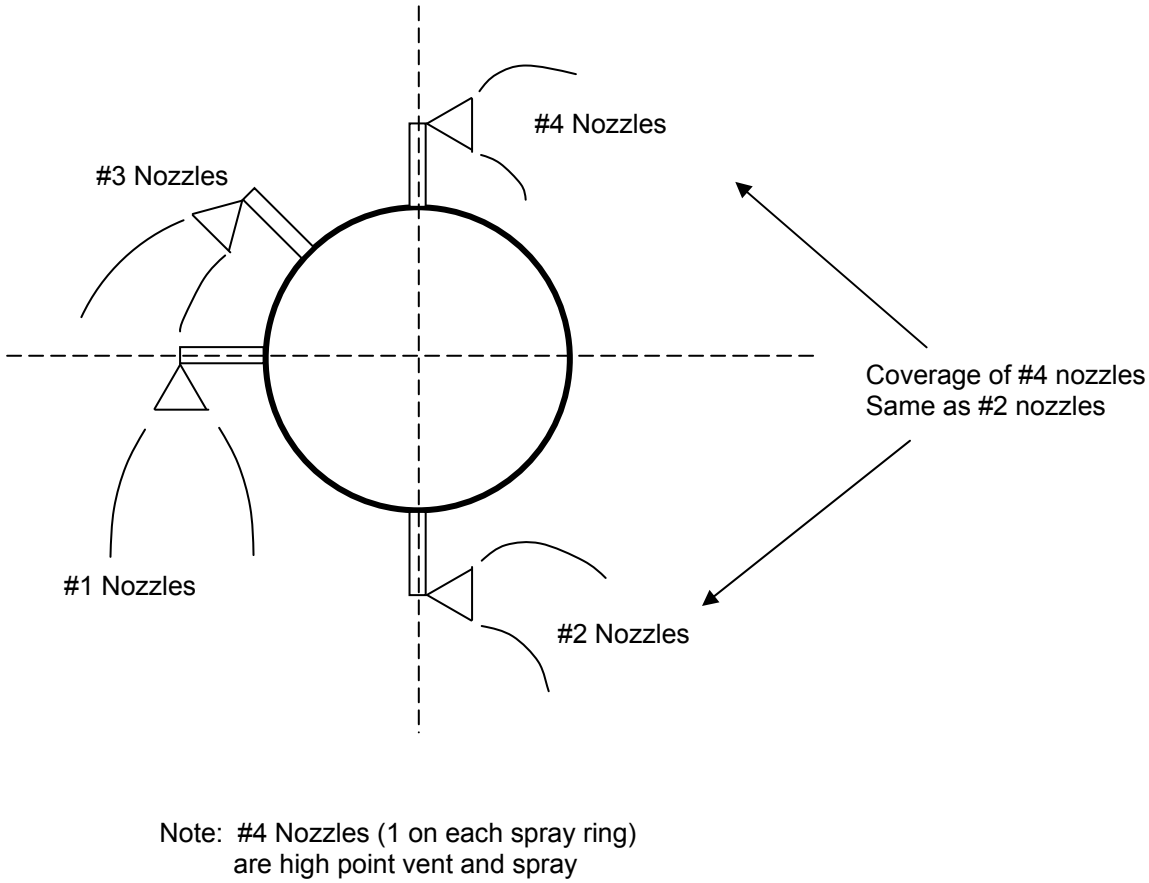

Figure 6.2.2-3 Containment Spray System Nozzle Orientation on Spray Ring

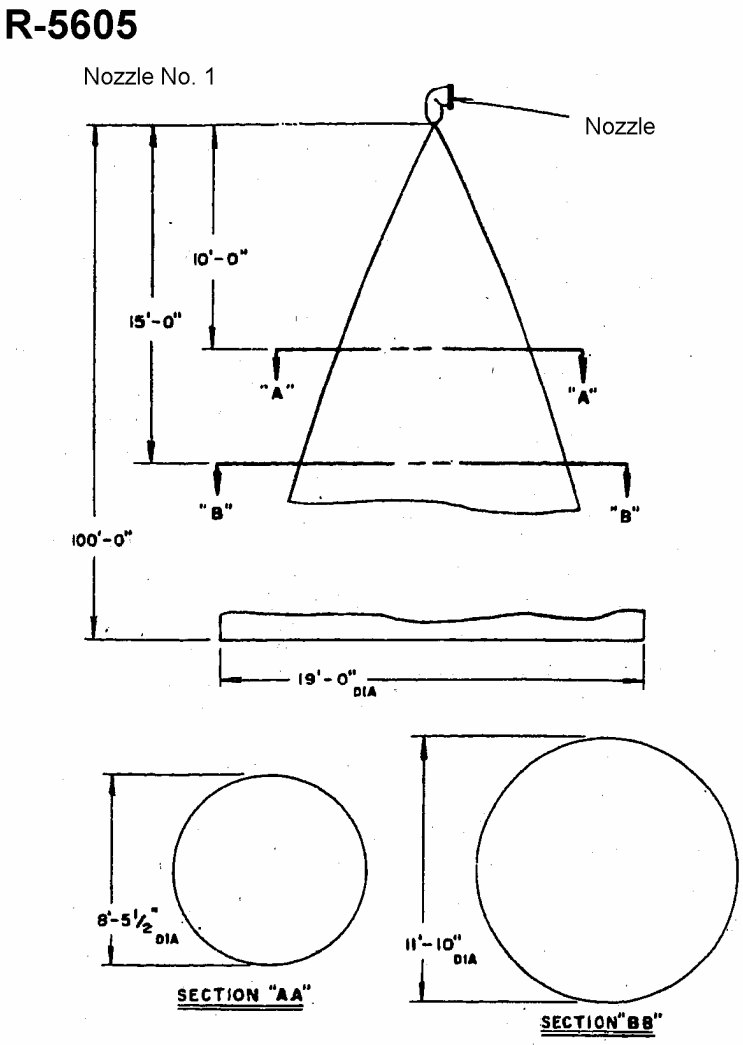

Figure 6.2.2-4 Containment Spray System Nozzle Spray Patterns (Sheet 1 of 3)

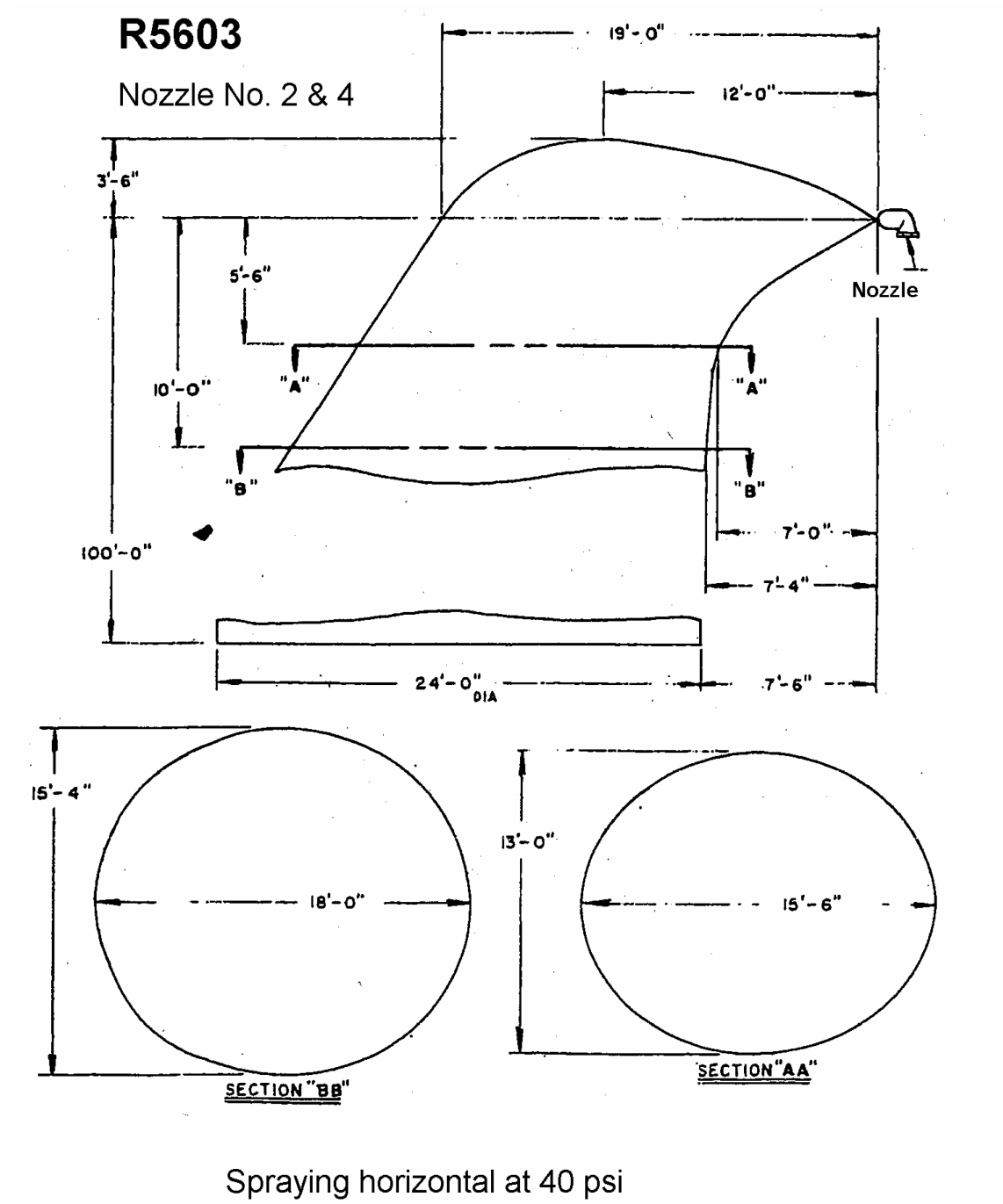

Figure 6.2.2-4 Containment Spray System Nozzle Spray Patterns (Sheet 2 of 3)

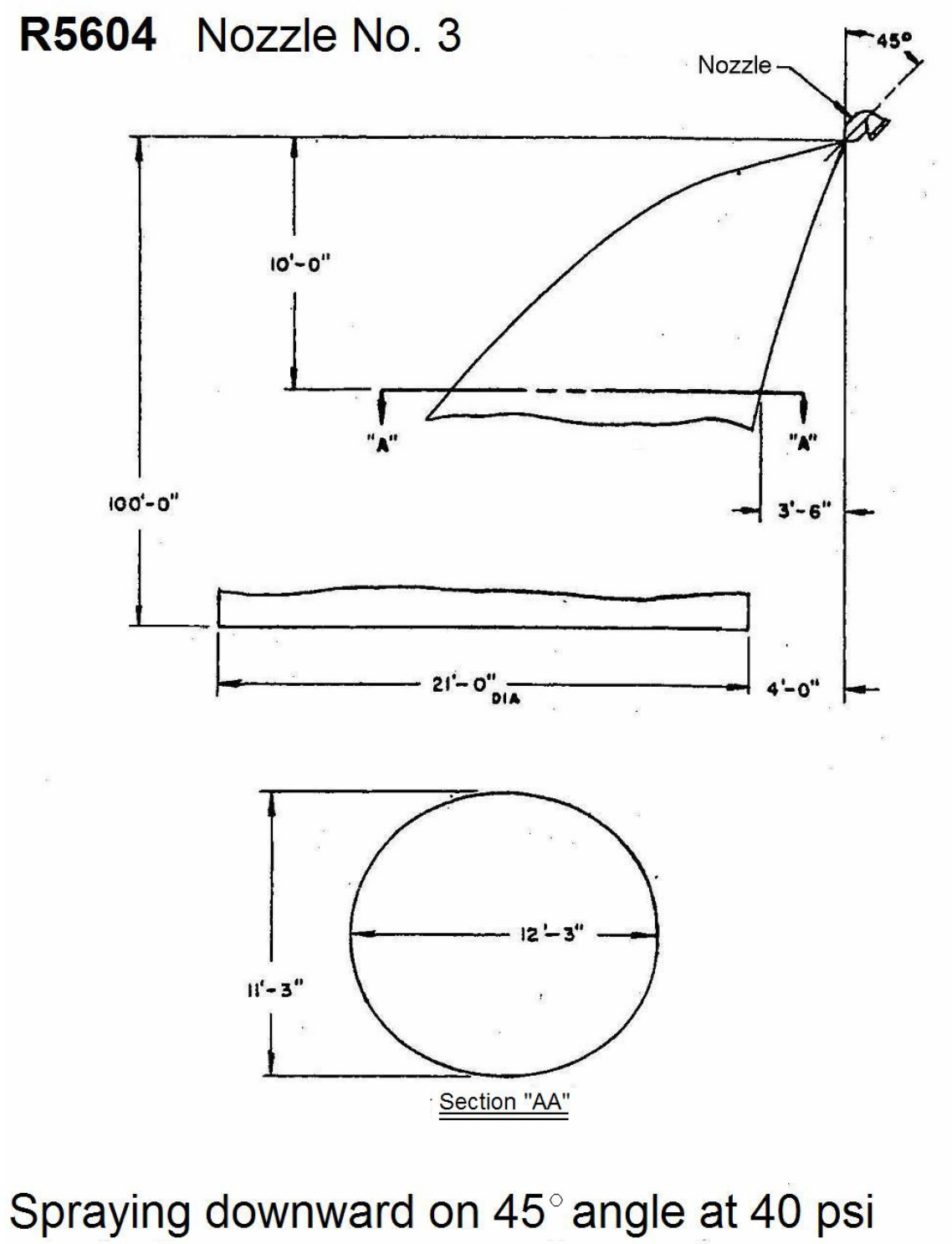

Figure 6.2.2-4 Containment Spray System Nozzle Spray Patterns (Sheet 3 of 3)

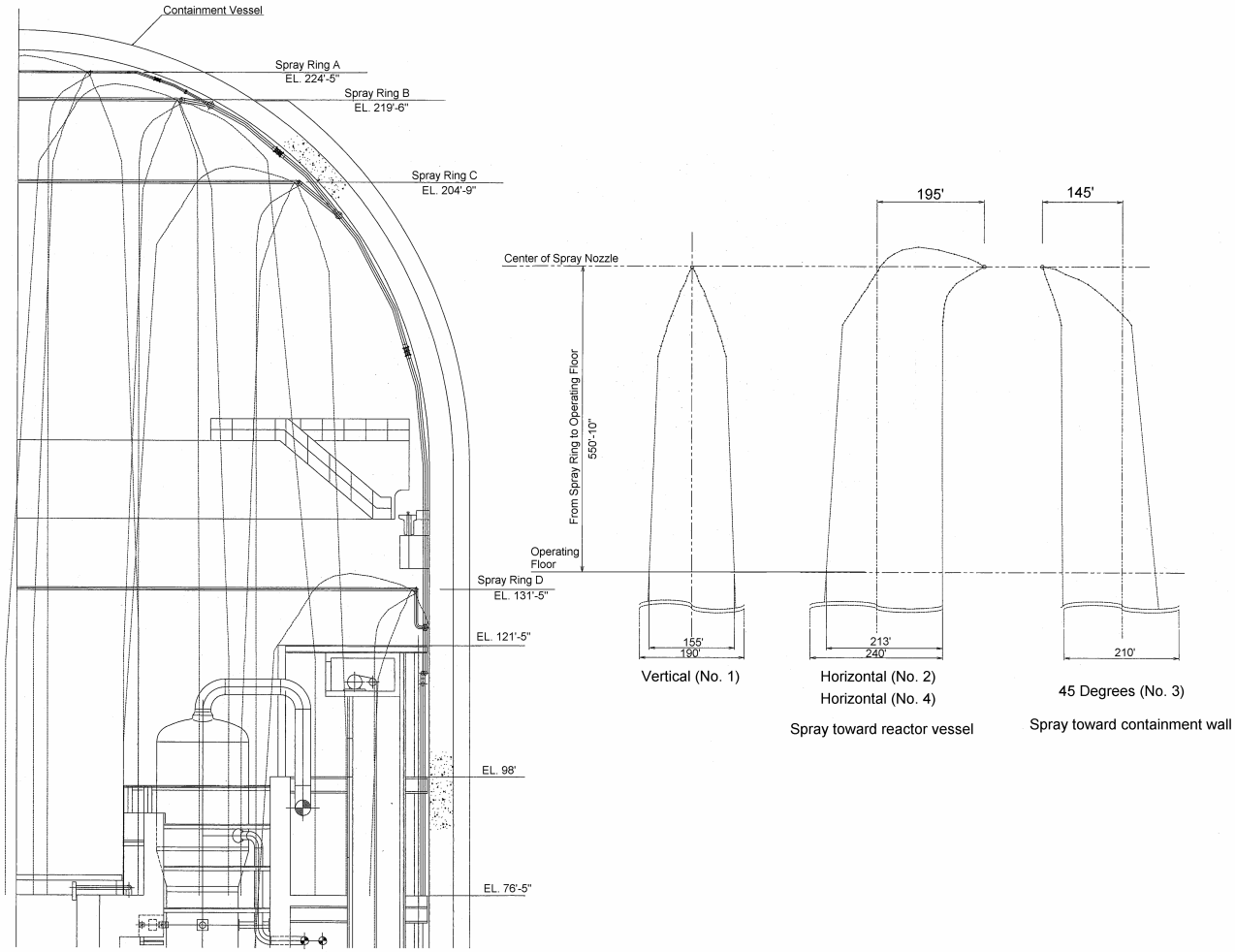

Figure 6.2.2-5 Containment Spray System Spray Ring Elevations

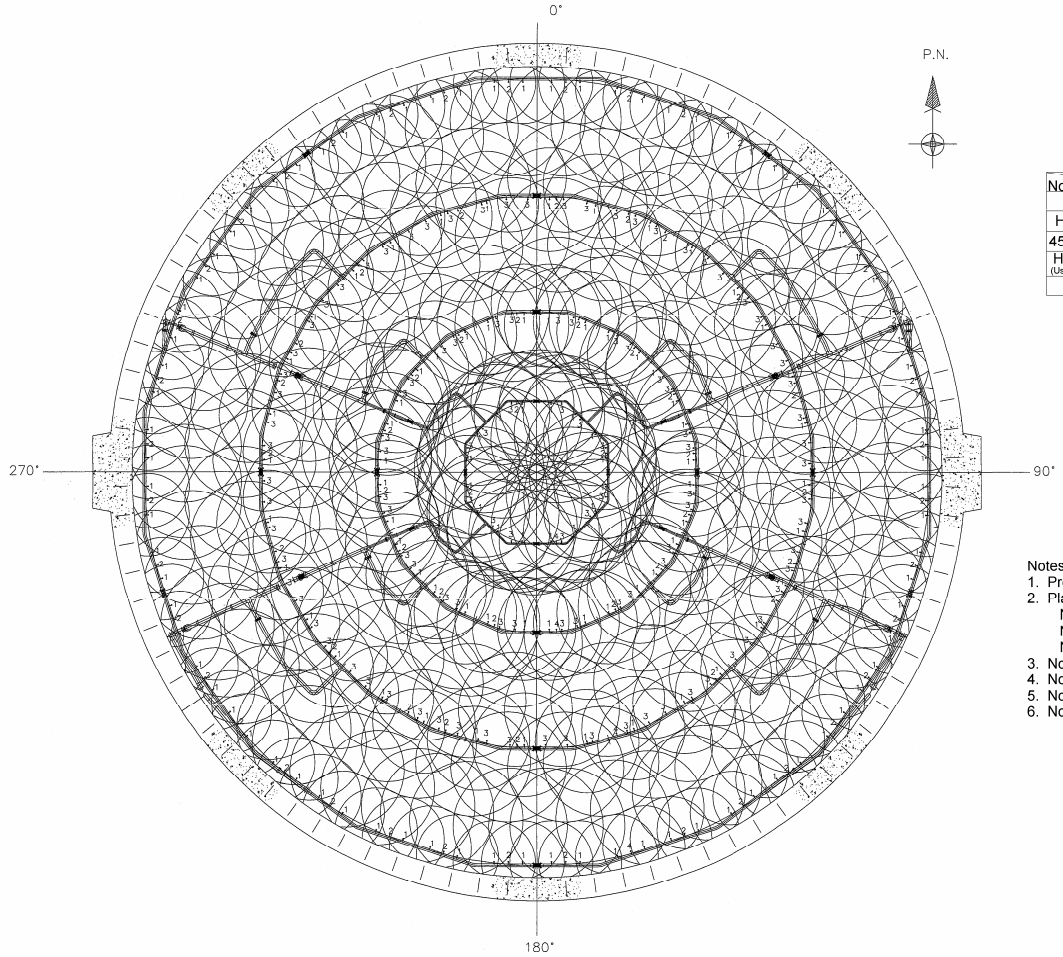

Nozzle \ Ring	Ring A	Ring B	Ring C	Ring D
Vertical (No. 1)	16	32	32	80
Horizontal (No. 2)	3	15	19	39
45 Degrees (No. 3)	12	32	64	None
Horizontal (No. 4) (Used as both spray and vent)	1	1	1	1
Total	32	80	116	120

Total of Spray Nozzle, 348

Notes:
1. Projected spray coverage at the operating floor.
2. Plan of spray coverage adopted and angle is as follows:
   Nozzle No. 1; R-5605
   Nozzle No. 2 and 4; R-5603
   Nozzle No. 3; R-5604
3. No. 2 nozzles spray toward reactor vessel.
4. No. 3 nozzles spray toward containment wall.
5. No. 4 nozzles are used as both spray and vent.
6. No. 1 nozzles sprays vertically down.

Figure 6.2.2-6 Containment Spray System Spray Nozzle Locations and Predicted Coverage on Operating Floor

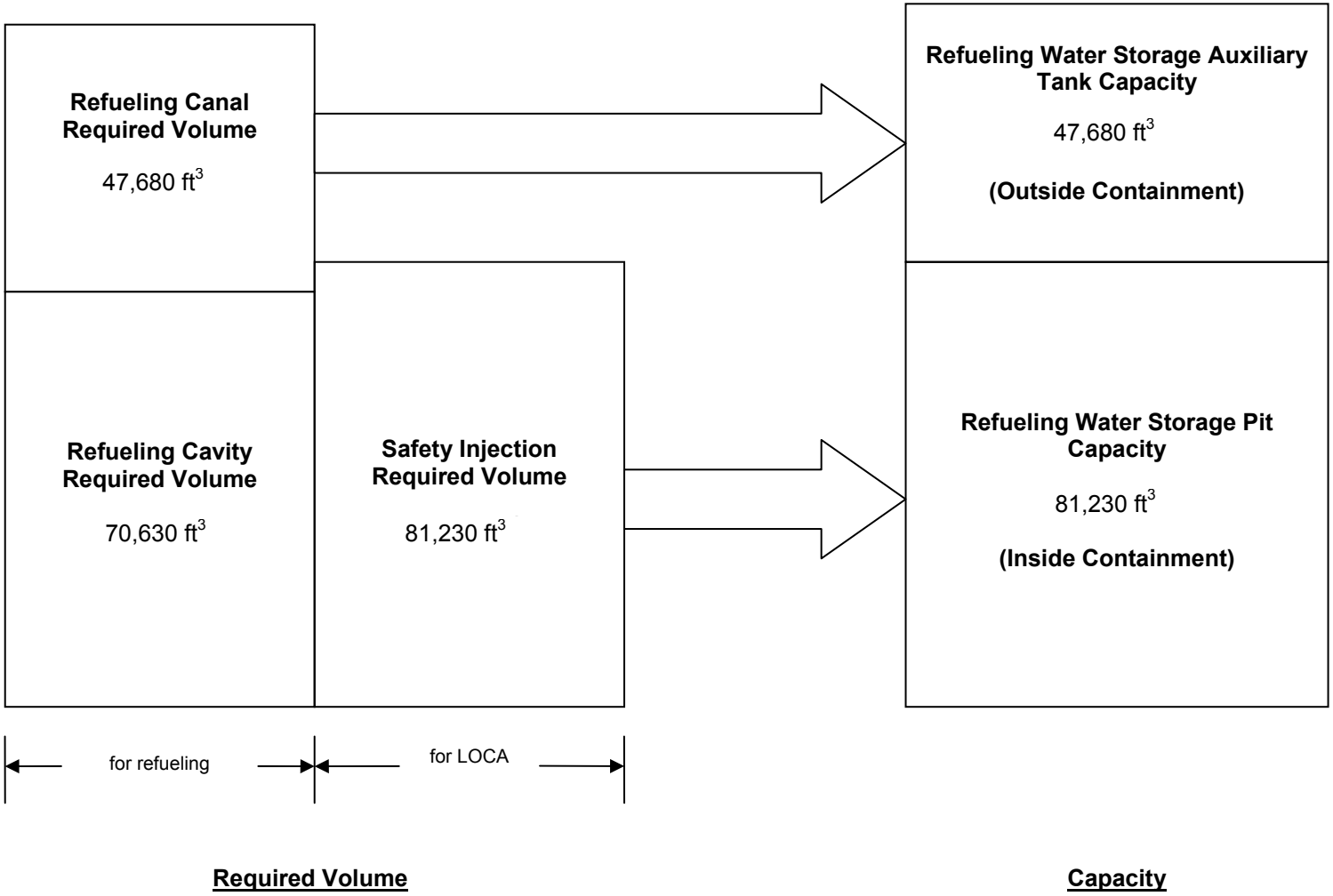

Figure 6.2.2-7 Required Water Volumes vs. Pit Capacities

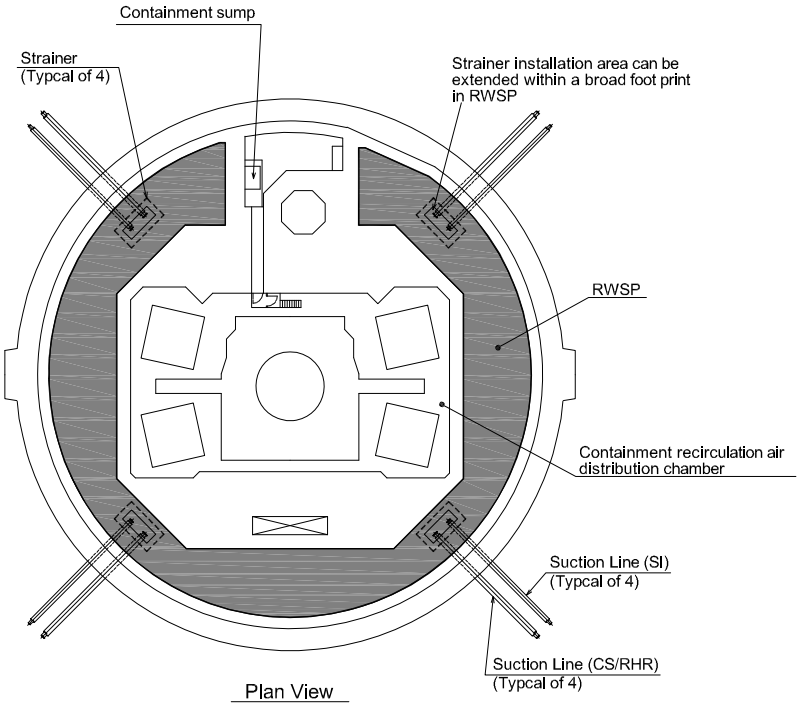

Figure 6.2.2-8 Plan View of RWSP and ECC/CS Strainers

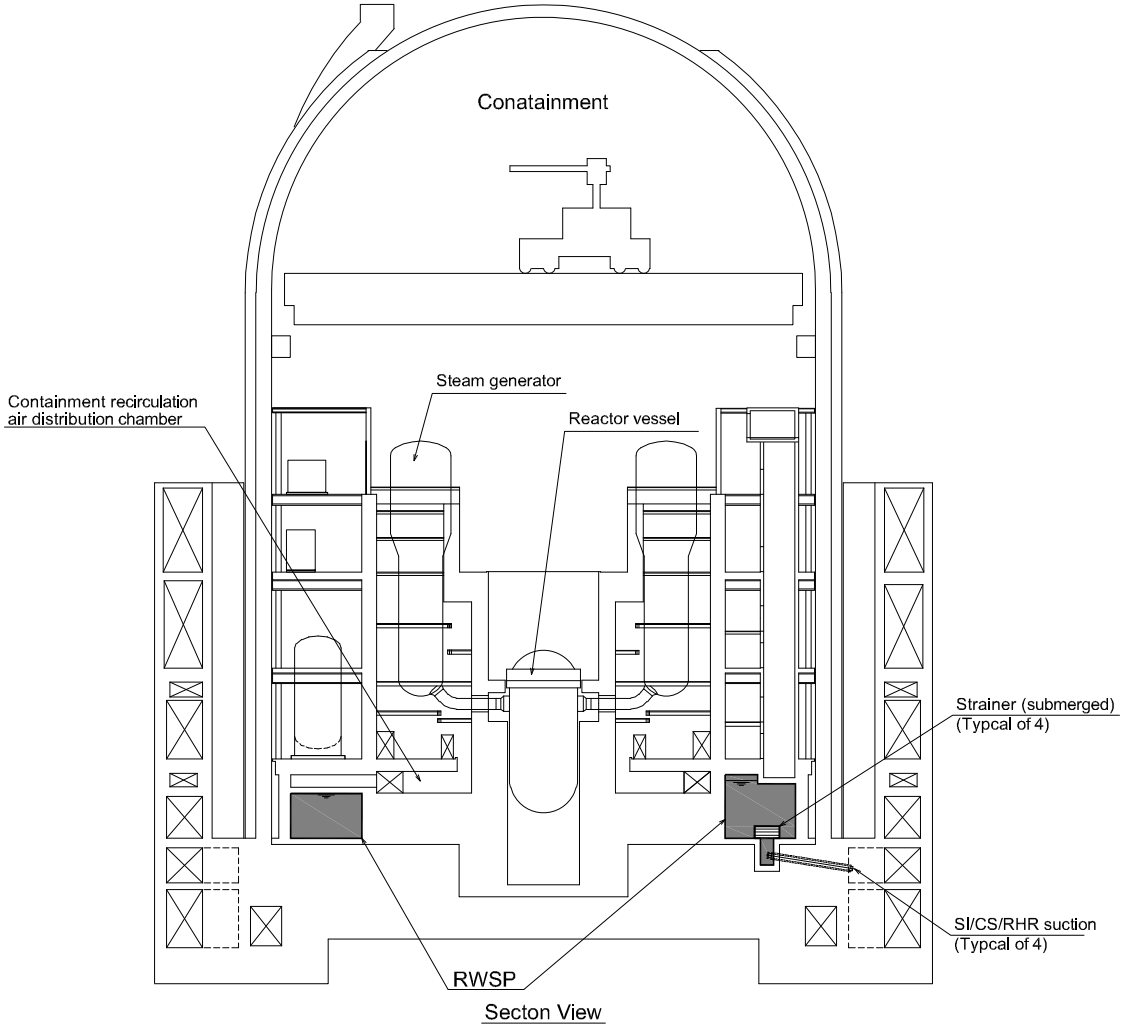

Figure 6.2.2-9 Sectional View of RWSP and ECC/CS Strainers

SYMBOLS

	Normally Open Valve (Containment Isolation Valve)		Containment Barrier
	Normally Open Valve (Not Containment Isolation Valve)		Air Operated Butterfly Valve
	Normally Closed (Containment Isolation Valve)	PI	Local Instrument (Pressure)
	Normally Closed (Not Containment Isolation Valve)	ST	Steam Trap
	Check Valve		Bellows
	Gate Valve		Water Sealed Tube
	Globe Valve		Bellows Seal Valve
	Butterfly Valve		Metal Diaphragm Valve
	Rubber Diaphragm Valve		Blind Flange
	Air Operated Valve		Swagelok Cap
M	Motor Operated Valve		Capped or Stubbed End
	Relief Valve or Safety Valve		Containment Penetration
PT	Transmitter		Closed System

Notes:

Dimensions in inches unless otherwise specified
Motor Operated Valves Fail “As Is”
Air Operated Valves Fail Closed

S	Emergency Core Cooling System Actuation Signal
T	Containment Isolation Signal
P	Containment Spray Signal
V	Containment Ventilation Isolation Signal
UV	Under Voltage Signal of High Voltage Bus
RCPS	Reactor Control and Protection System
TC	Test Connection
LC	Locked Closed
FC	Fail Closed
NC	Normally Close
RM	Remote Manual
N2	Nitrogen Gas
WHT	Waste Holdup Tank

Figure 6.2.4-1 Containment Isolation Configurations (Sheet 1 of 50)

Reactor Coolant System

N2 Supply Line to Pressurizer Relief Tank

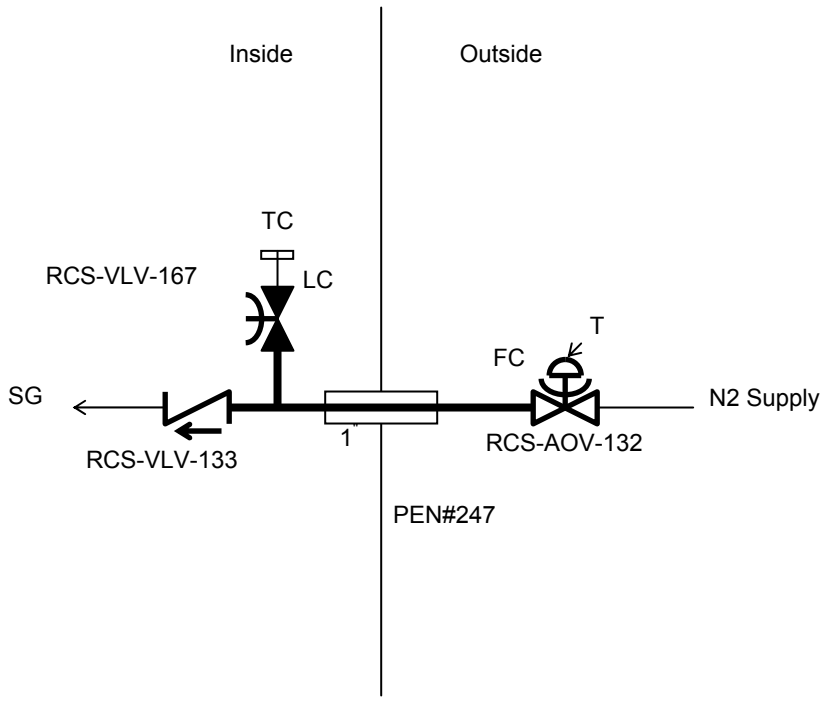

Figure 6.2.4-1 Containment Isolation Configurations (Sheet 2 of 50)

Reactor Coolant System

Primary Makeup Water Supply Line to Pressurizer Relief Tank

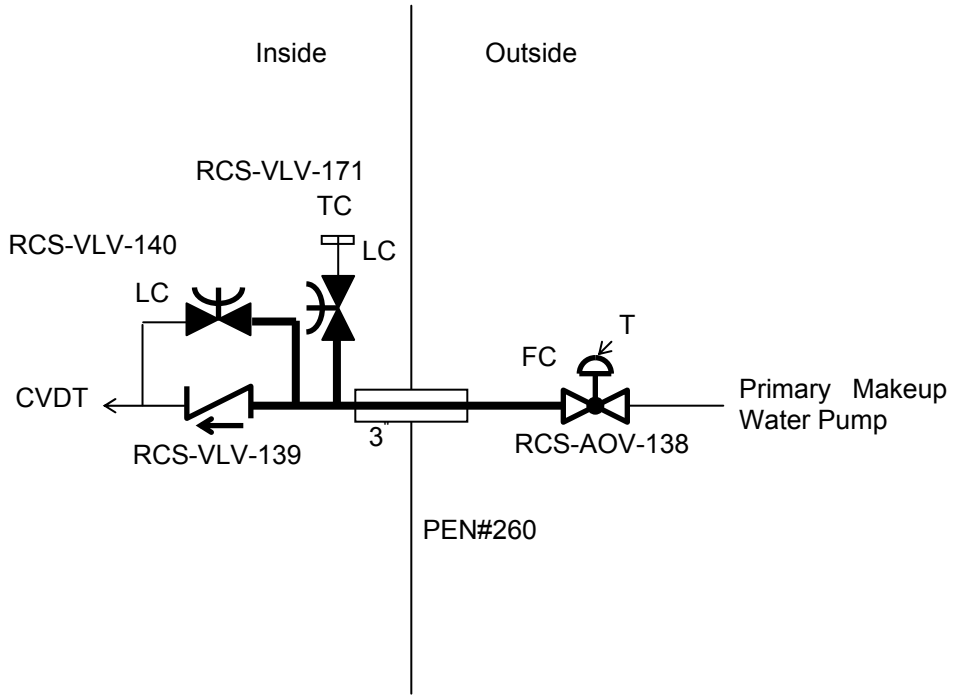

Figure 6.2.4-1 Containment Isolation Configurations (Sheet 3 of 50)

Reactor Coolant System

Pressurizer Relief Tank Gas Analyzer Line

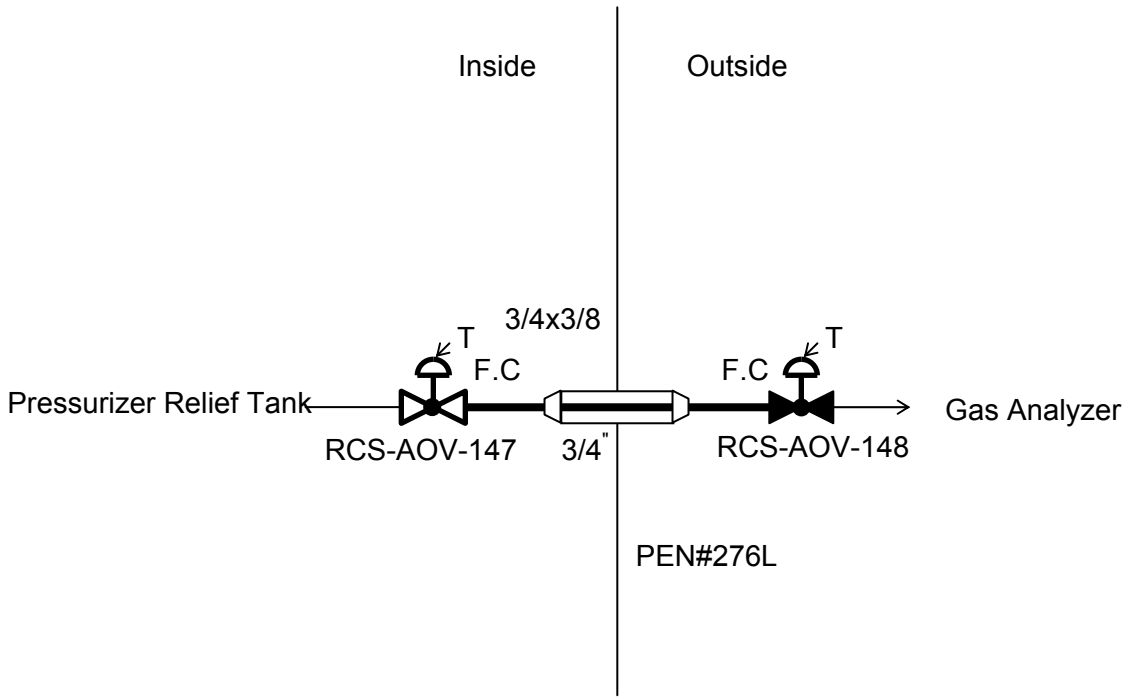

Figure 6.2.4-1 Containment Isolation Configurations (Sheet 4 of 50)

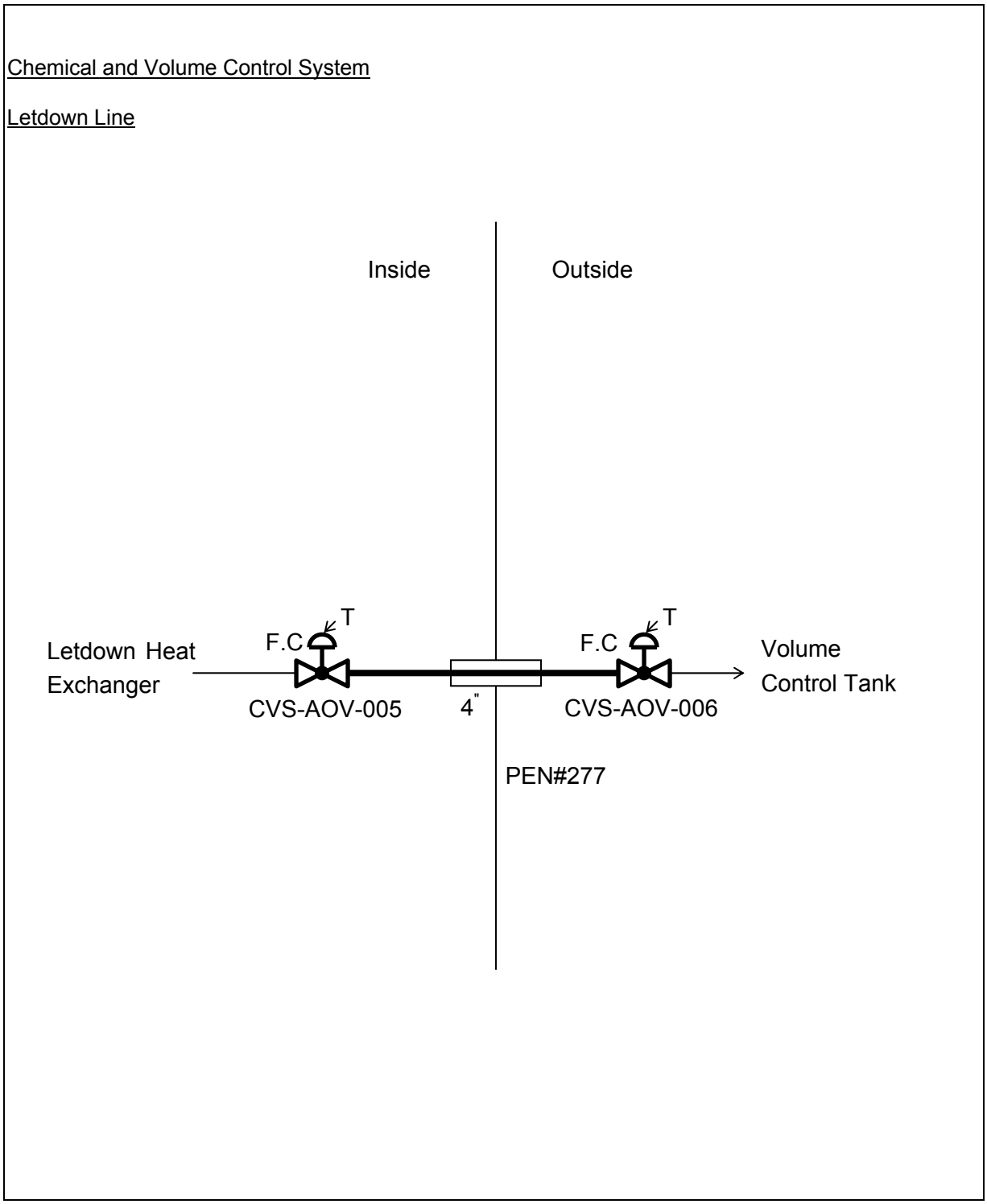

Figure 6.2.4-1 Containment Isolation Configurations (Sheet 5 of 50)

Chemical and Volume Control System

Charging Line

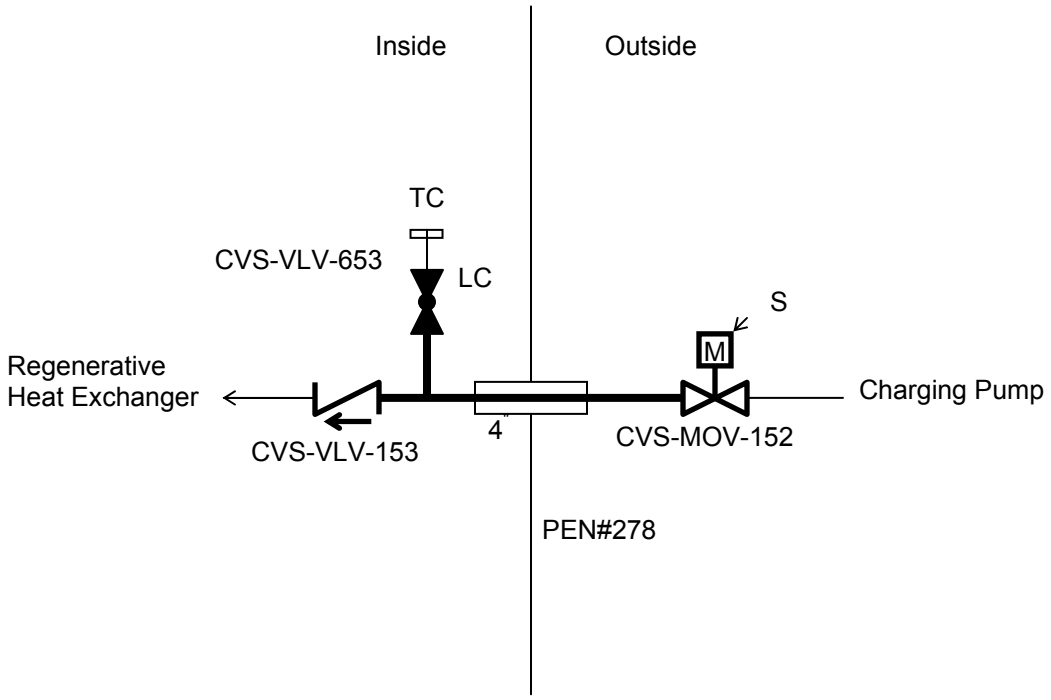

Figure 6.2.4-1 Containment Isolation Configurations (Sheet 6 of 50)

Chemical and Volume Control System

Seal Injection Line for Reactor Coolant Pump

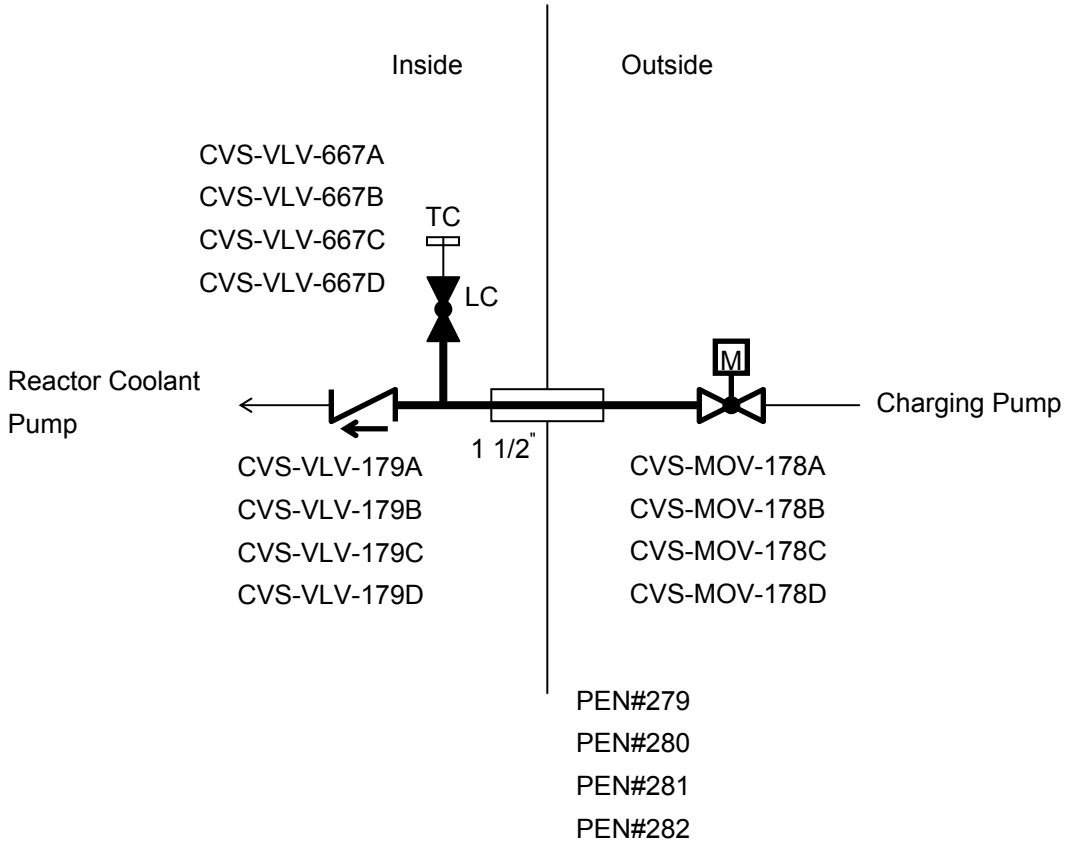

Figure 6.2.4-1 Containment Isolation Configurations (Sheet 7 of 50)

Chemical and Volume Control System

Seal Water Return Line

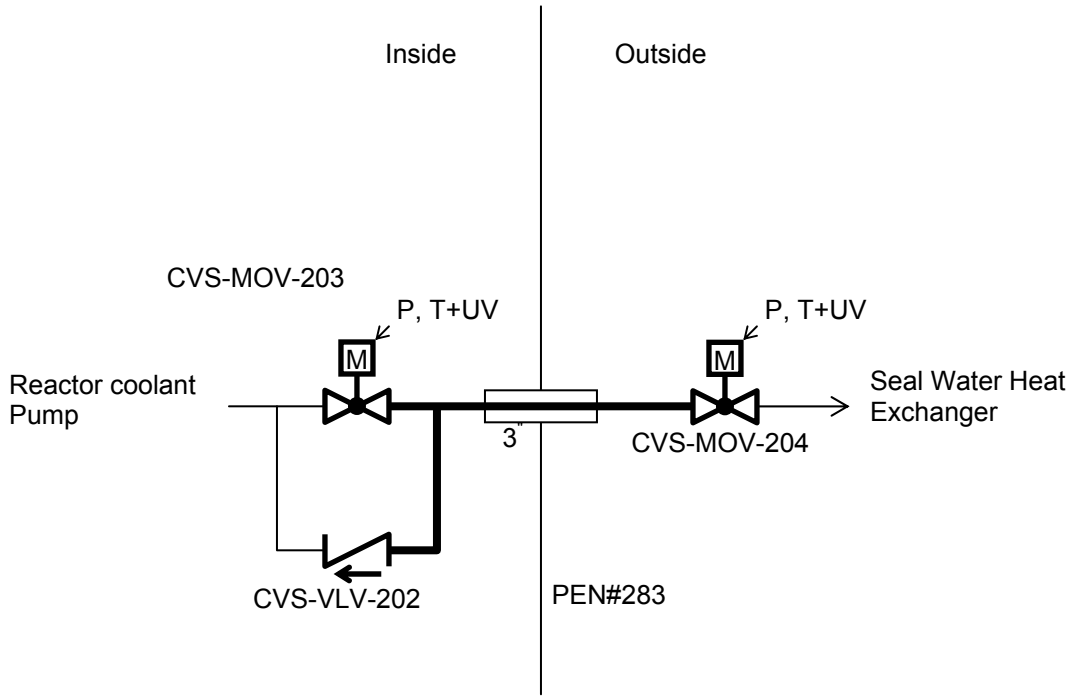

Figure 6.2.4-1 Containment Isolation Configurations (Sheet 8 of 50)

Safety Injection System

N2 Supply Line to Accumulators

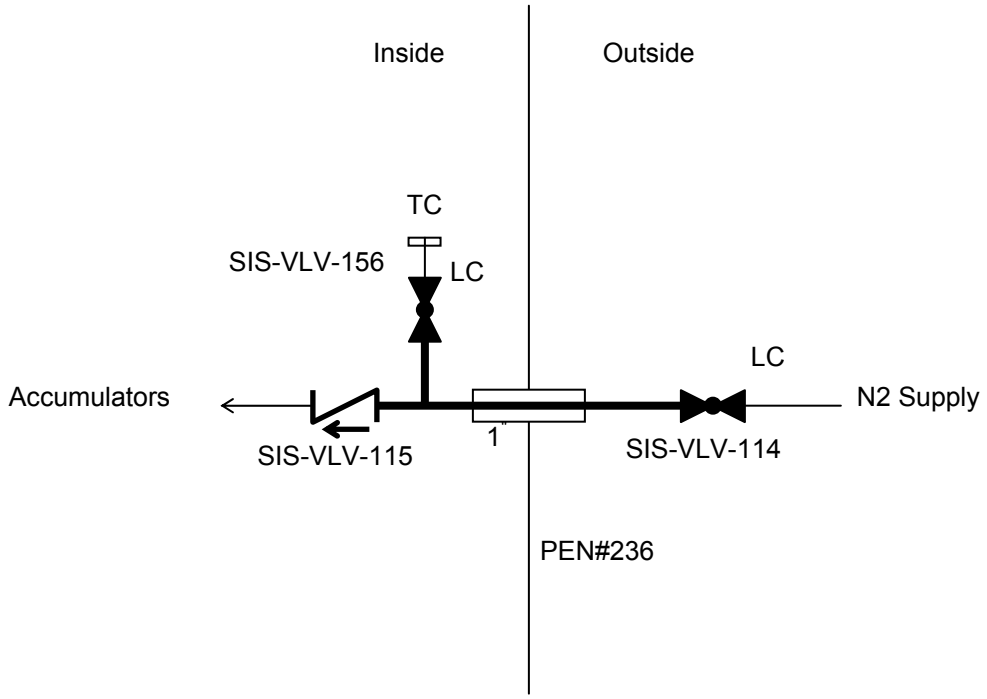

Figure 6.2.4-1 Containment Isolation Configurations (Sheet 9 of 50)

Safety Injection System

Safety Injection Line

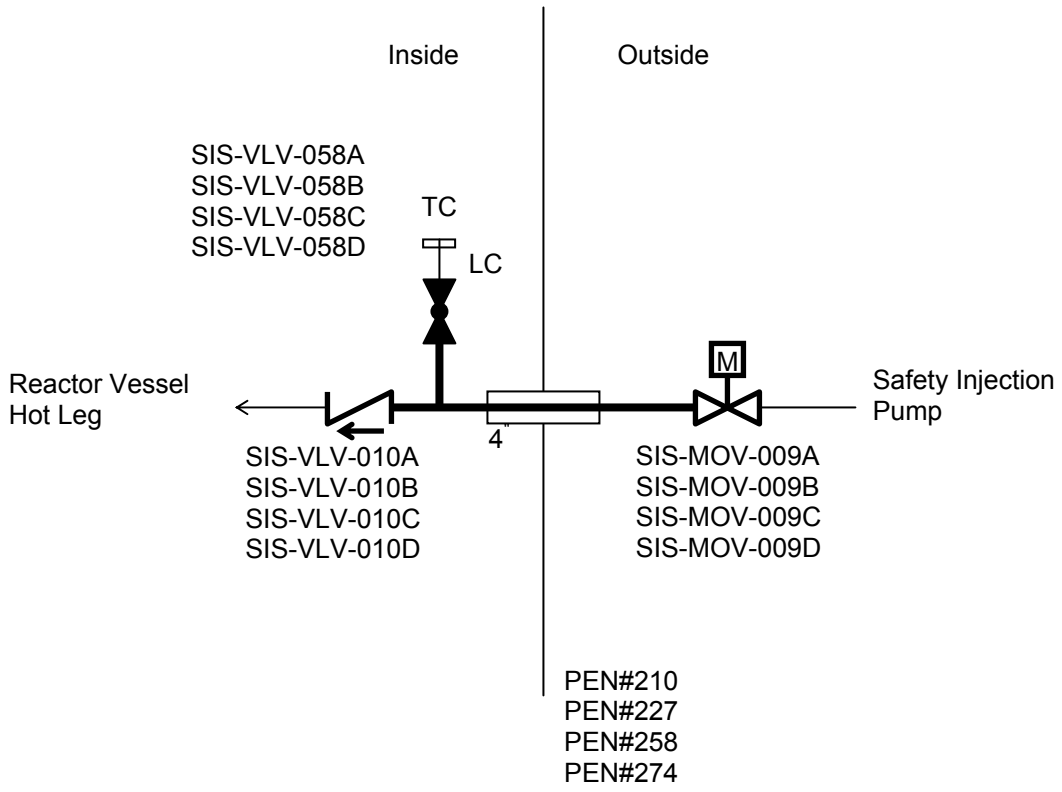

Figure 6.2.4-1 Containment Isolation Configurations (Sheet 10 of 50)

Safety Injection System

Safety Injection Pump Suction Line

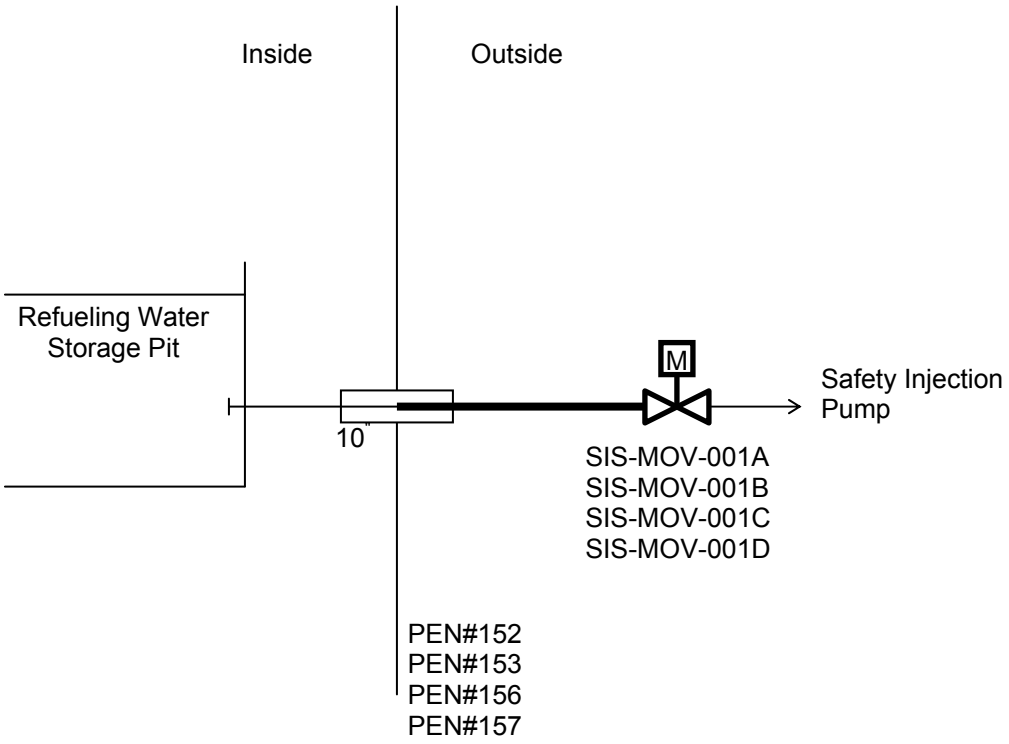

Figure 6.2.4-1 Containment Isolation Configurations (Sheet 11 of 50)

Residual Heat Removal System

Containment Spray / Residual Heat Removal (CS/RHR) Pump Suction Line

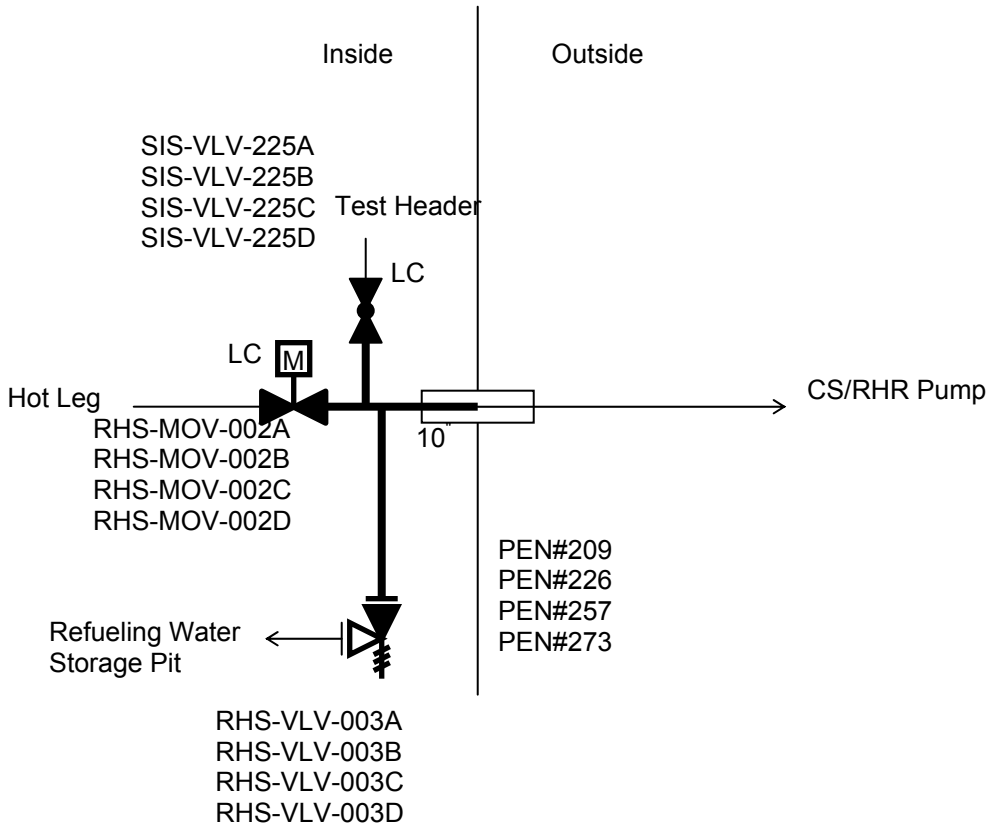

Figure 6.2.4-1 Containment Isolation Configurations (Sheet 12 of 50)

Residual Heat Removal System

Residual Heat Removal Return Line

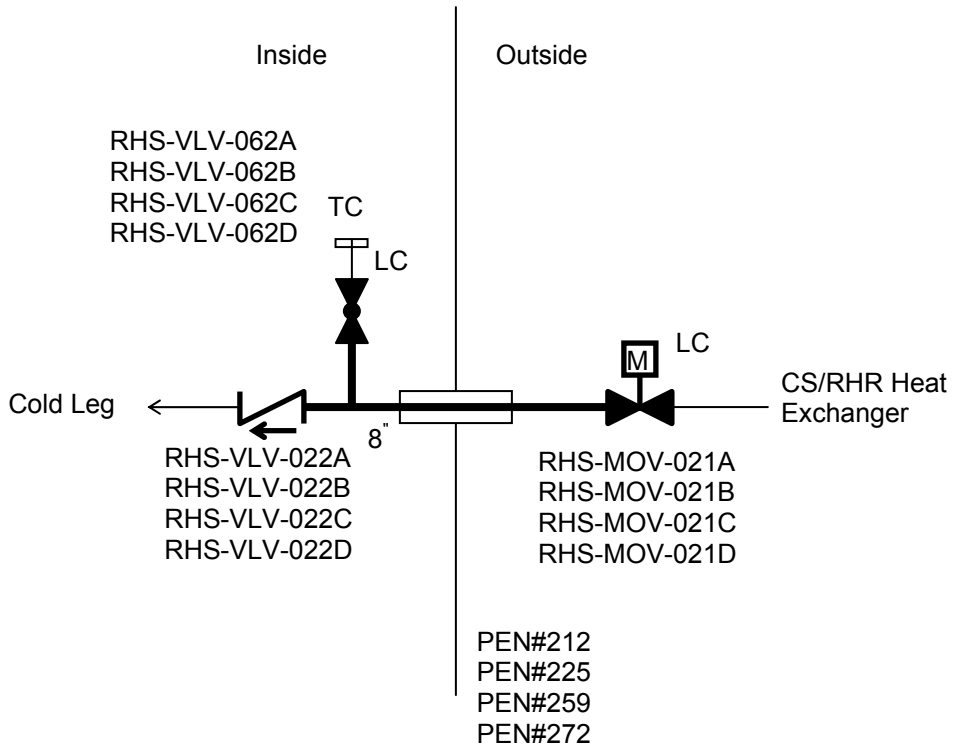

Figure 6.2.4-1 Containment Isolation Configurations (Sheet 13 of 50)

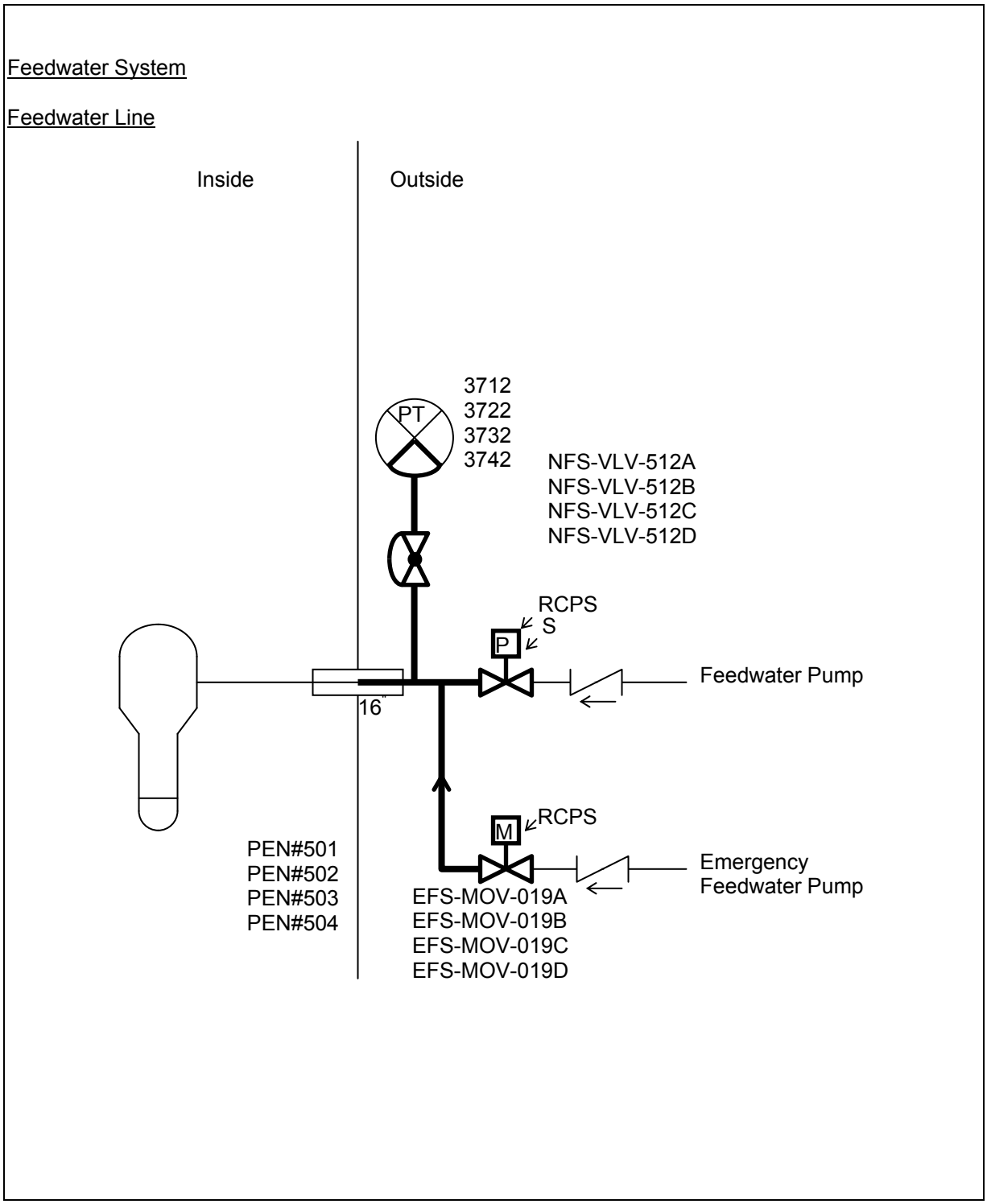

Figure 6.2.4-1 Containment Isolation Configurations (Sheet 14 of 50)

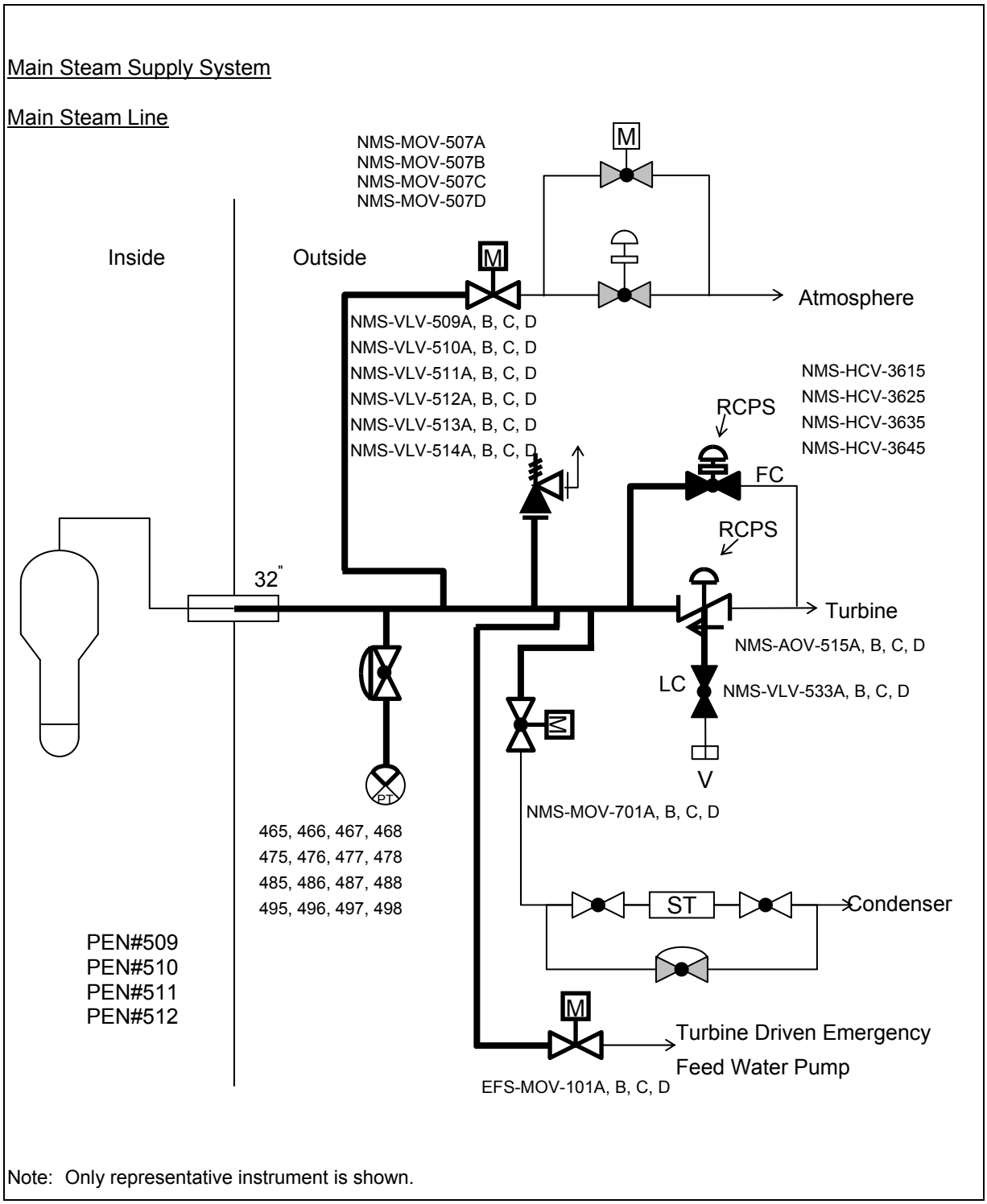

Figure 6.2.4-1 Containment Isolation Configurations (Sheet 15 of 50)

Containment Spray System

Containment Spray Line

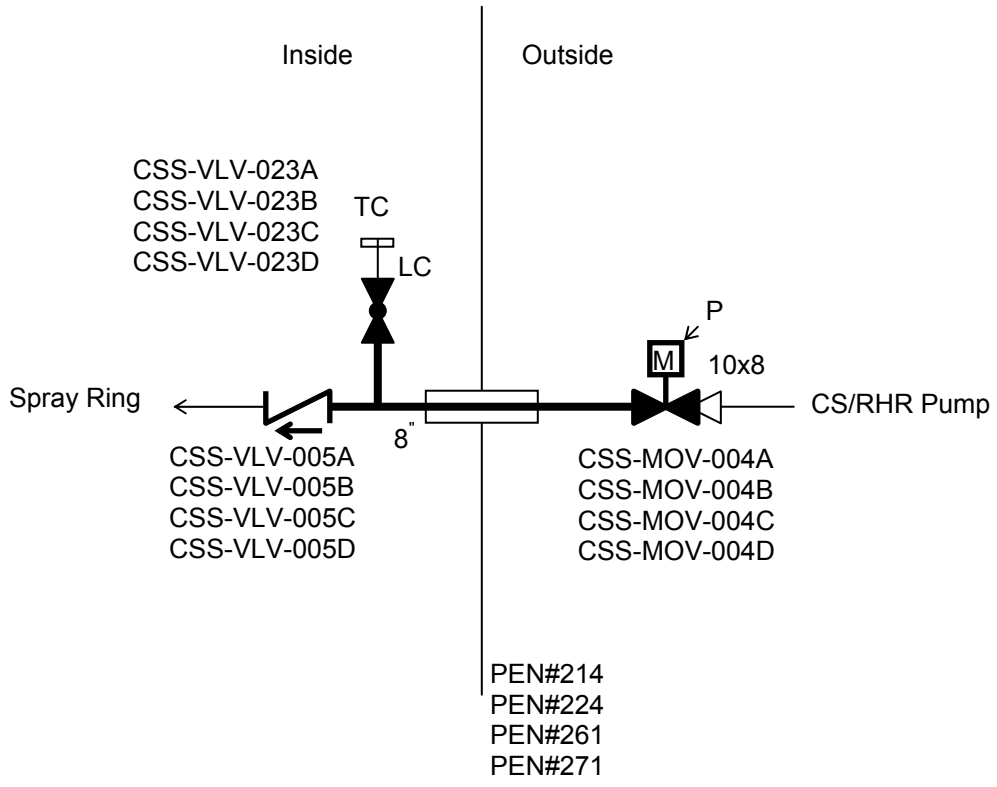

Figure 6.2.4-1 Containment Isolation Configurations (Sheet 16 of 50)

Containment Spray System

Containment Pressure Instrument Line

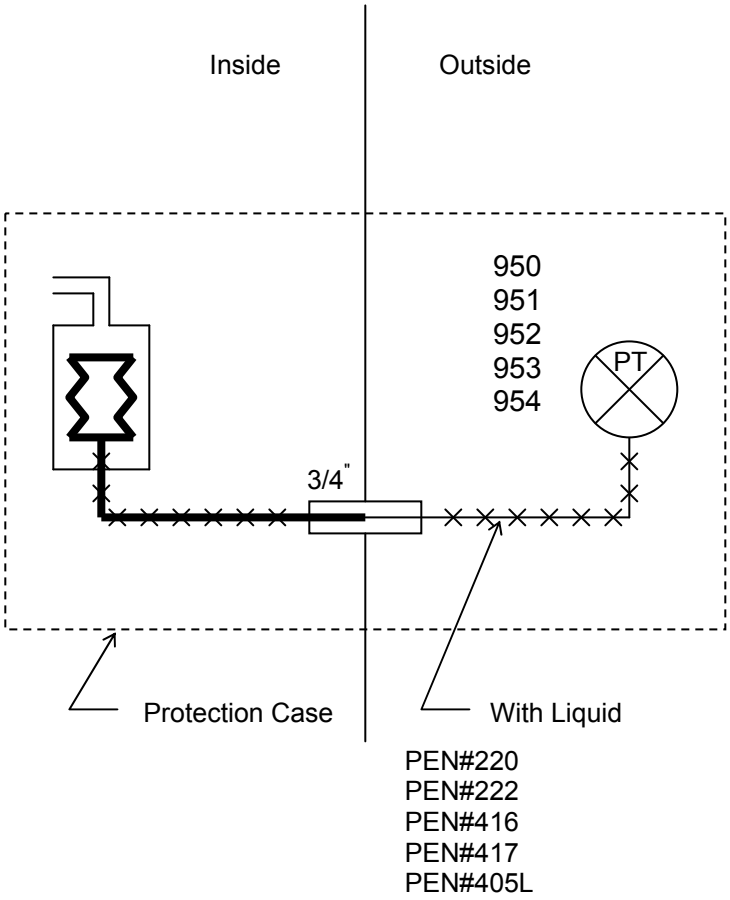

Figure 6.2.4-1 Containment Isolation Configurations (Sheet 17 of 50)

Containment Spray System

Containment Spray / Residual Heat Removal (CS/RHR) Pump Suction Line

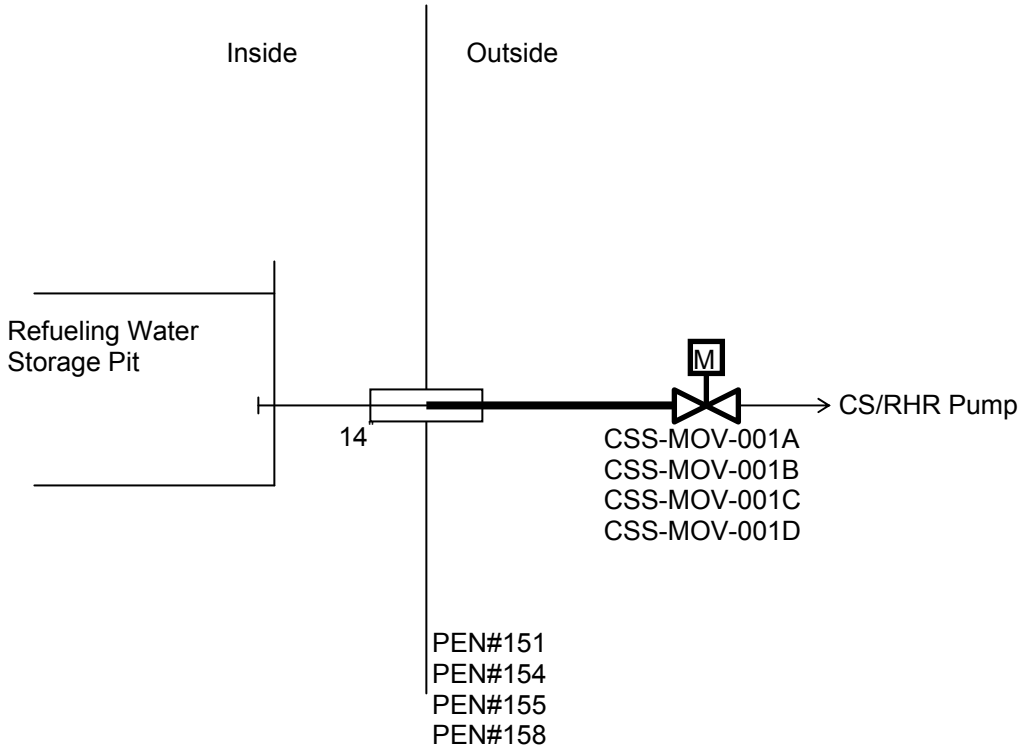

Figure 6.2.4-1 Containment Isolation Configurations (Sheet 18 of 50)

Component Cooling Water System

Cooling Water supply Line to Reactor Coolant Pump

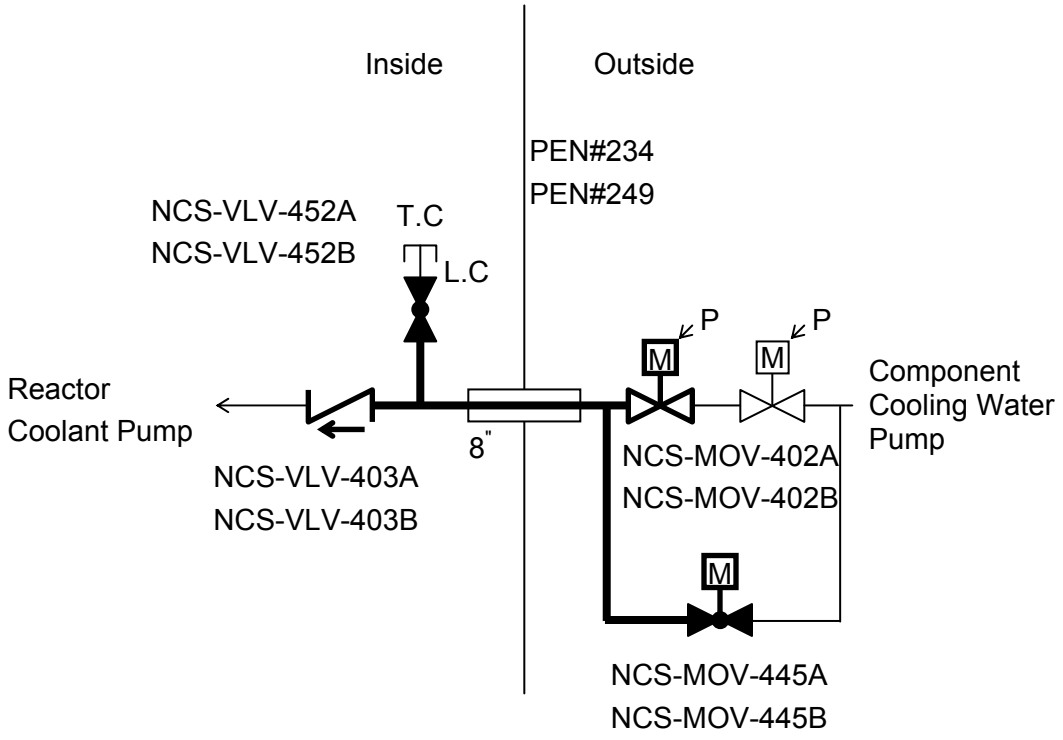

Note: Motor Operated Valve outer side of containment is installed for preventing loss of Component Cooling Water when pipe rupture inside the containment is occurred.

Figure 6.2.4-1 Containment Isolation Configurations (Sheet 19 of 50)

Component Cooling Water System

Cooling Water Return Line from Reactor Coolant Pump

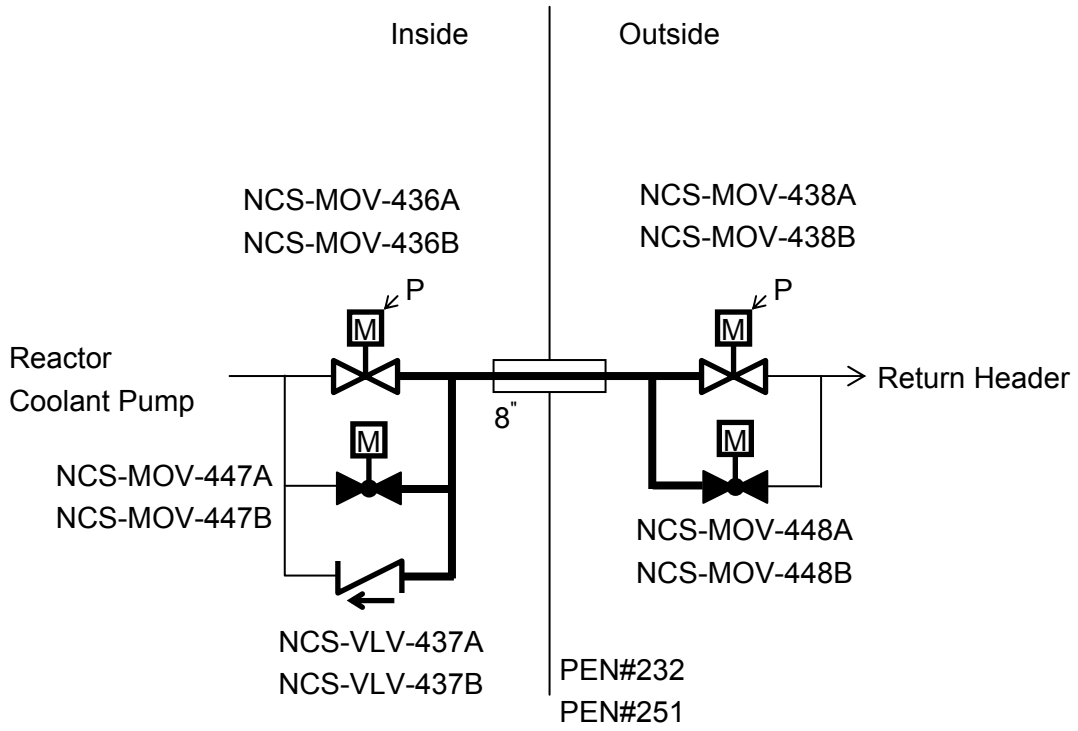

Figure 6.2.4-1 Containment Isolation Configurations (Sheet 20 of 50)

Component Cooling Water System

Component Cooling Water Line to Excess Letdown Heat Exchanger

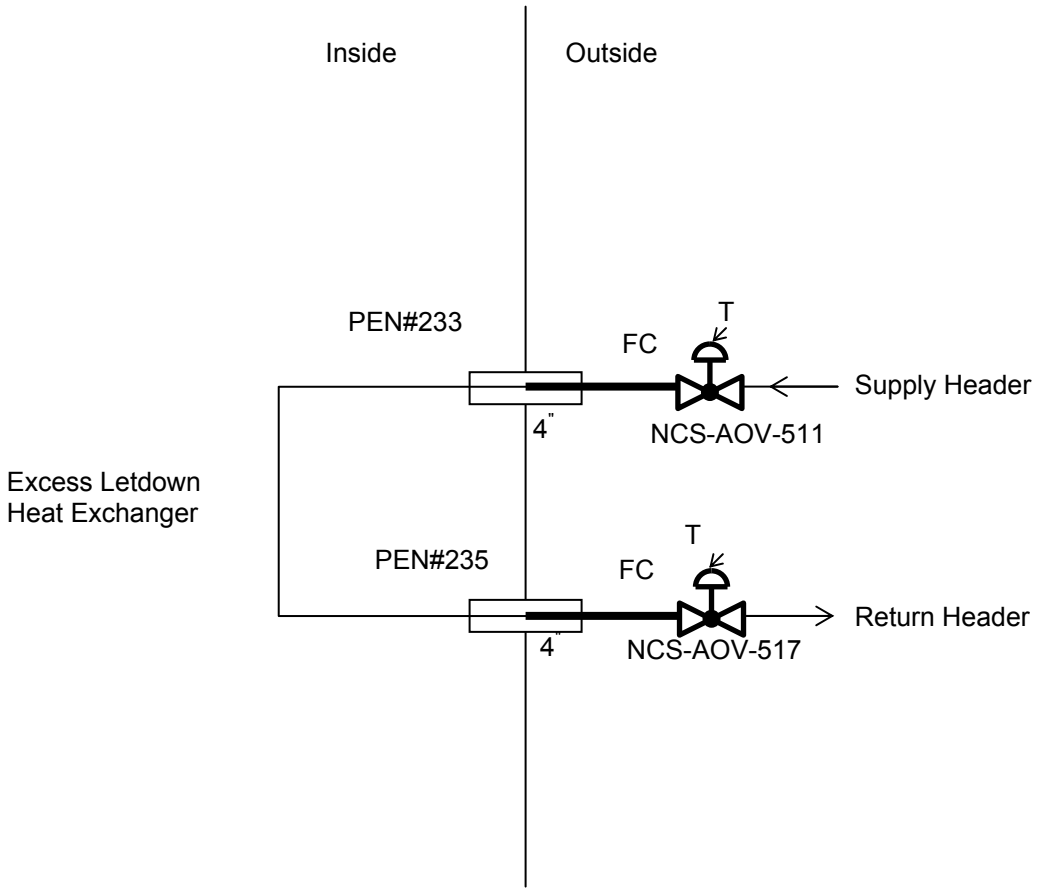

Figure 6.2.4-1 Containment Isolation Configurations (Sheet 21 of 50)

Component Cooling Water System

Component Cooling Water Line to Letdown Heat Exchanger

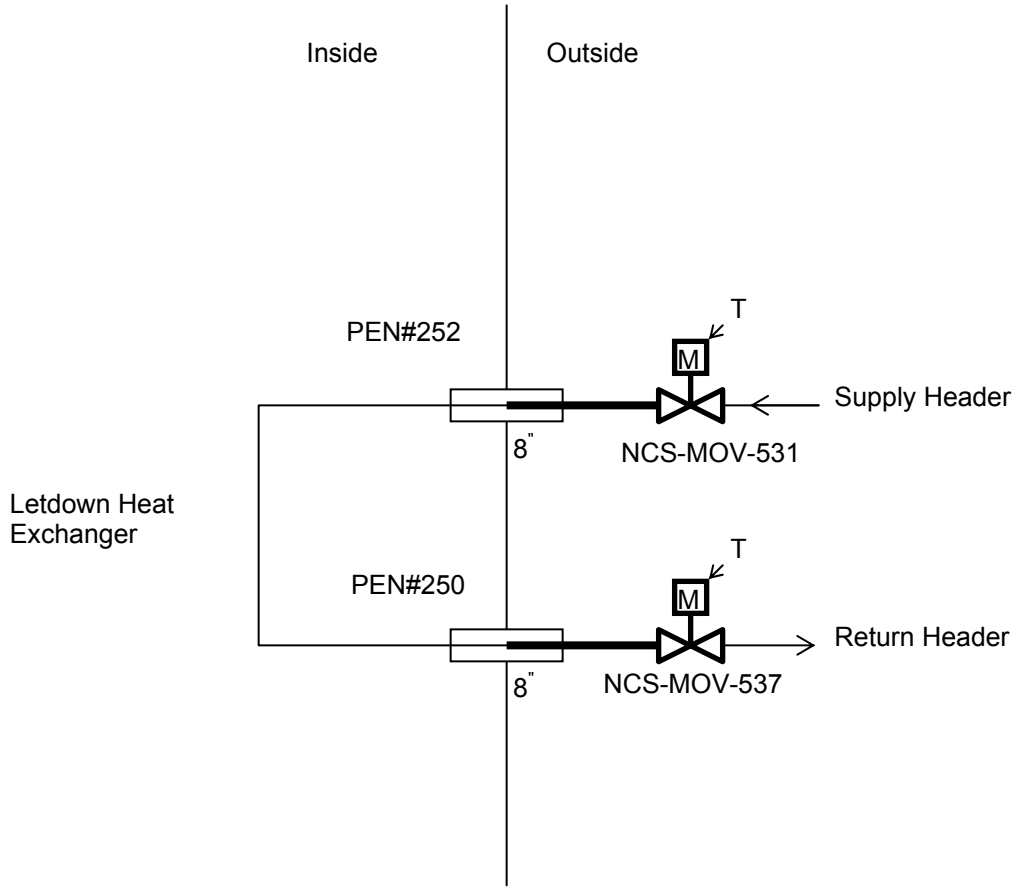

Figure 6.2.4-1 Containment Isolation Configurations (Sheet 22 of 50)

Waste Management System

C/V Reactor Coolant Drain Tank Gas Analysis Line

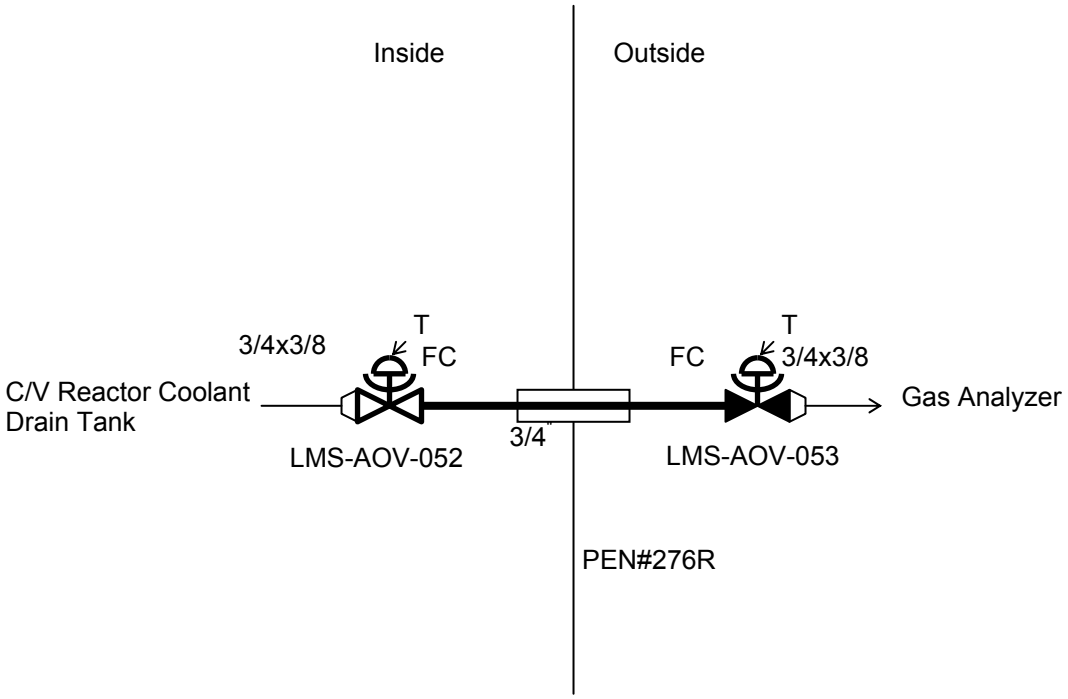

Figure 6.2.4-1 Containment Isolation Configurations (Sheet 23 of 50)

Waste Management System

C/V Reactor Coolant Drain Tank N2 Supply and Vent Line

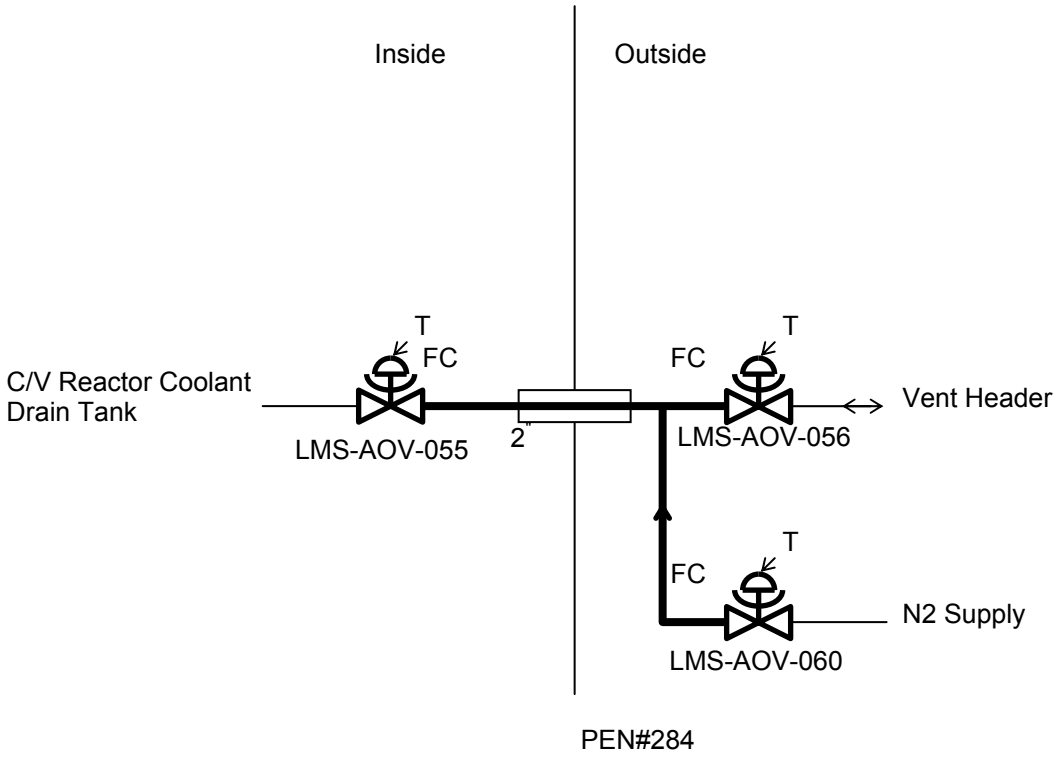

Figure 6.2.4-1 Containment Isolation Configurations (Sheet 24 of 50)

Waste Management System

C/V Reactor Coolant Drain Pump Discharge Line

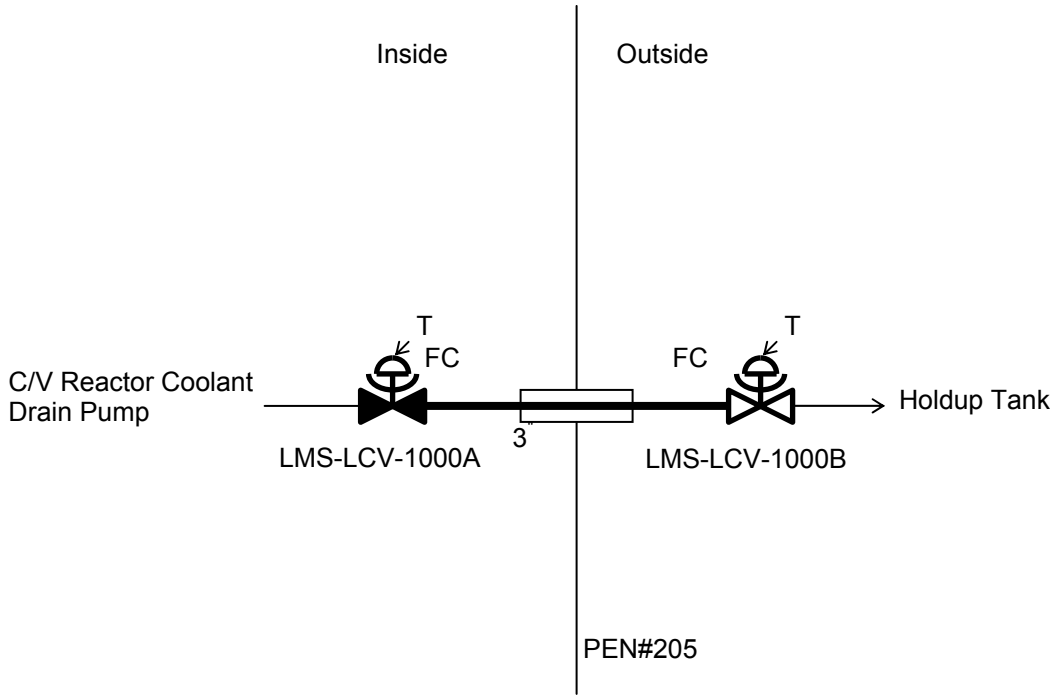

Figure 6.2.4-1 Containment Isolation Configurations (Sheet 25 of 50)

Waste Management System

C/V Sump Pump Discharge Line

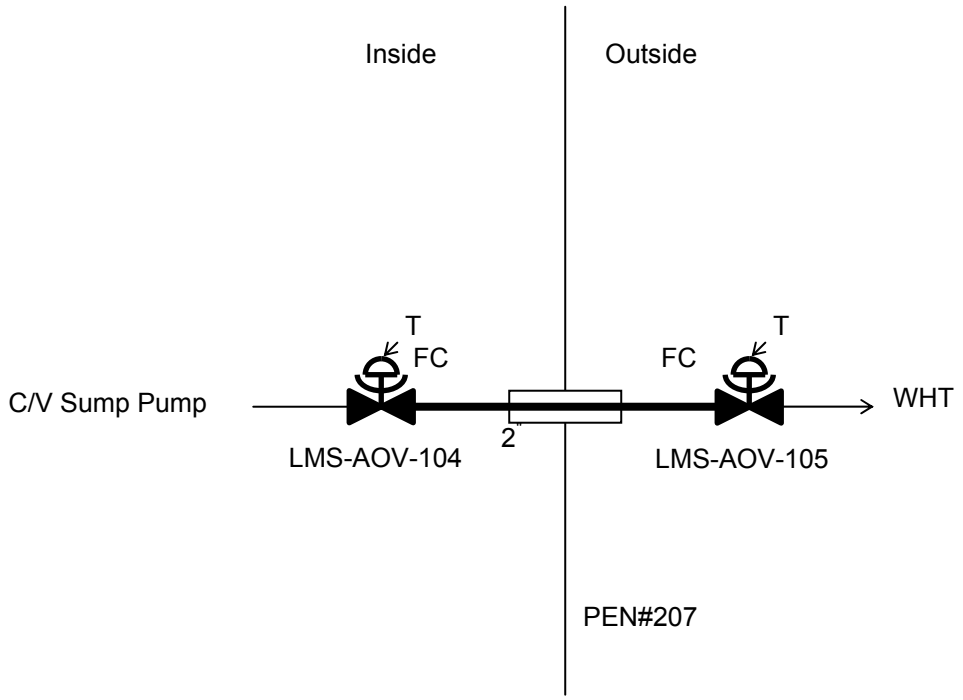

Figure 6.2.4-1 Containment Isolation Configurations (Sheet 26 of 50)

Process and Post Accident Sampling System

Pressurizer Gas and Liquid Phase / Reactor Coolant Sampling Line

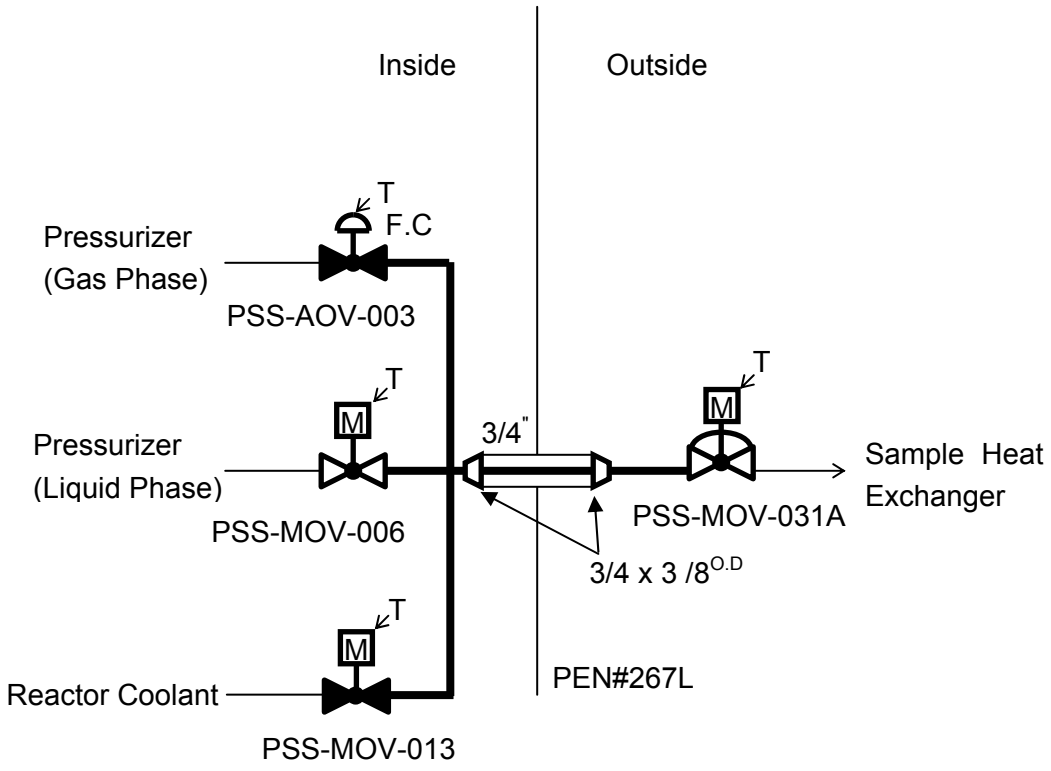

Figure 6.2.4-1 Containment Isolation Configurations (Sheet 27 of 50)

Process and Post Accident Sampling System

Reactor Coolant Sampling Line

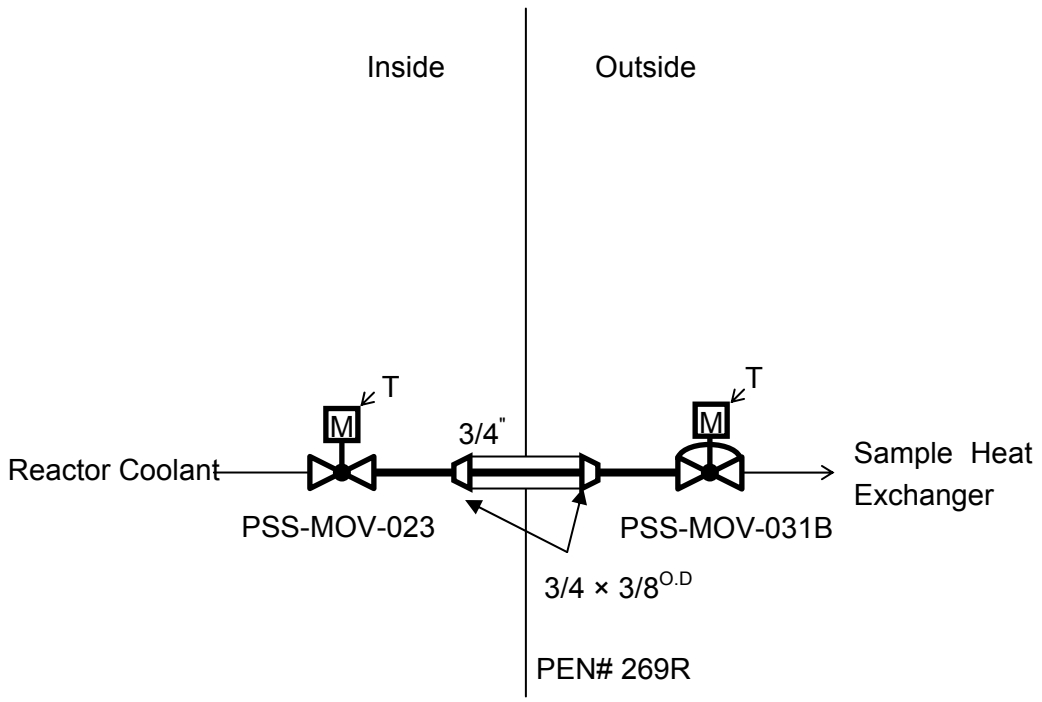

Figure 6.2.4-1 Containment Isolation Configurations (Sheet 28 of 50)

Process and Post Accident Sampling System

Accumulator Sampling Line

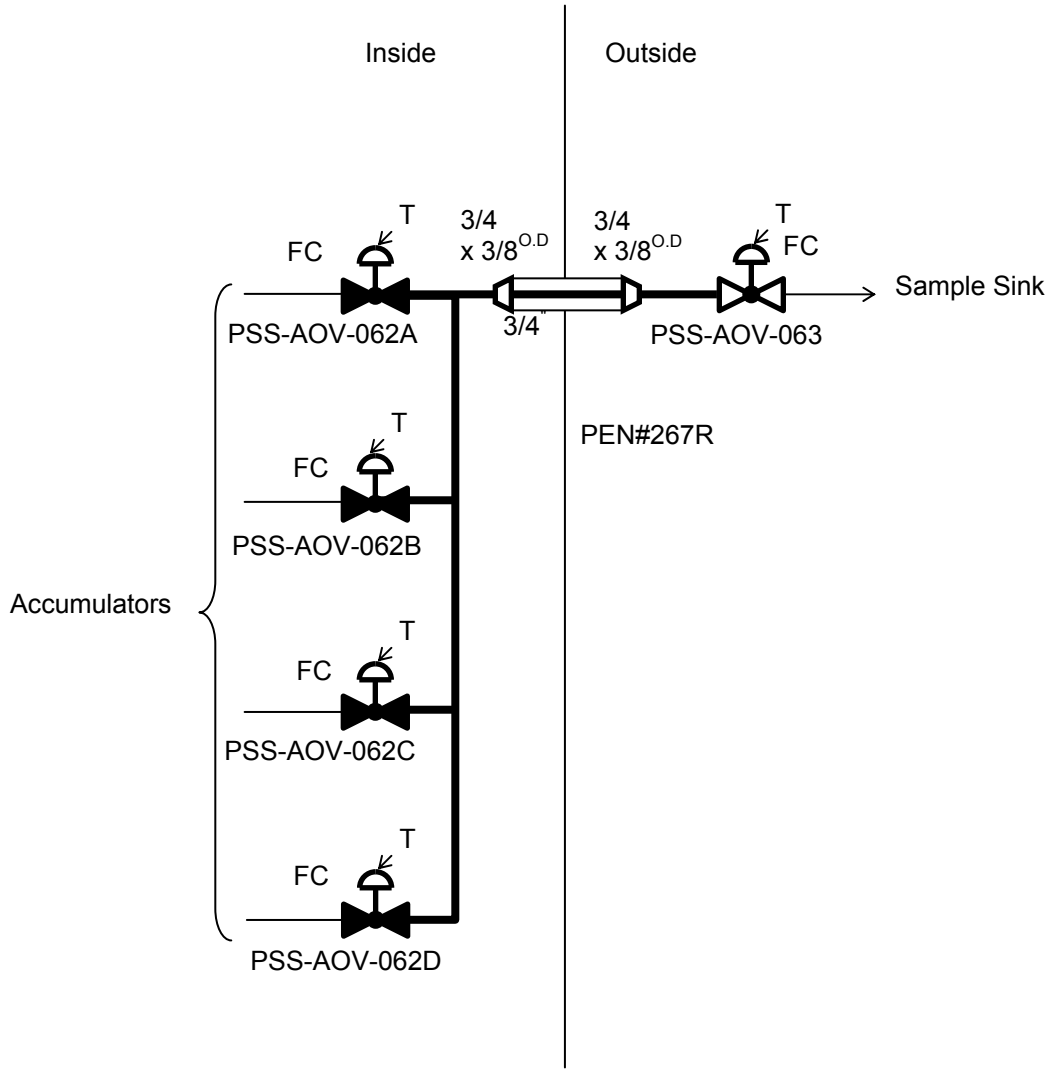

Figure 6.2.4-1 Containment Isolation Configurations (Sheet 29 of 50)

Process and Post Accident Sampling System

Post-Accident Sampling Return Line

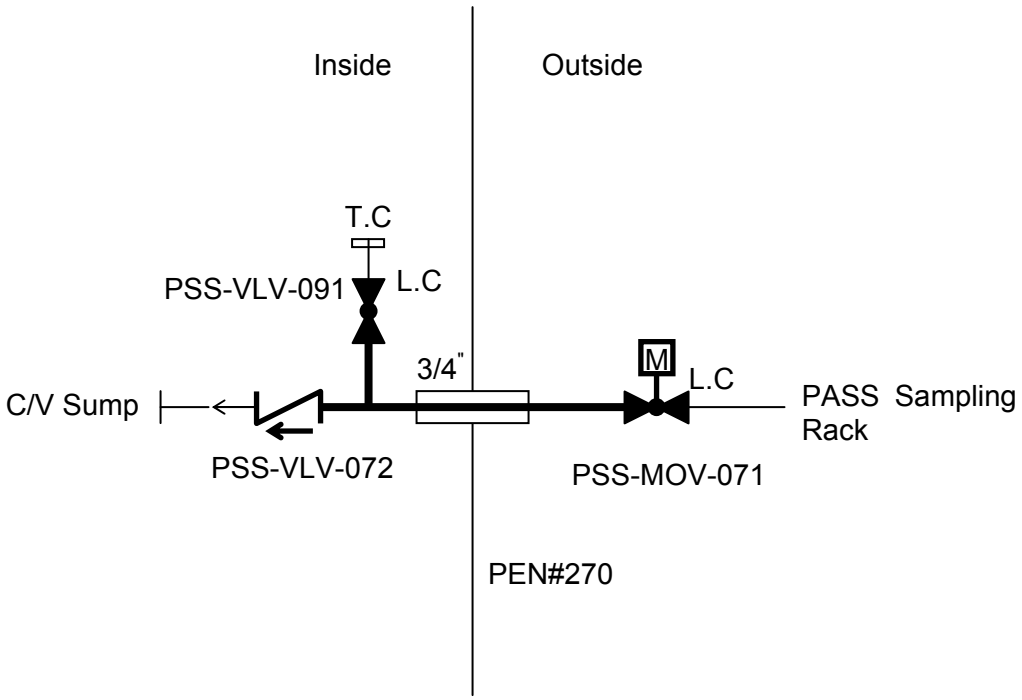

Figure 6.2.4-1 Containment Isolation Configurations (Sheet 30 of 50)

Steam Generator Blowdown System

Steam Generator Blowdown (SGBD) Line

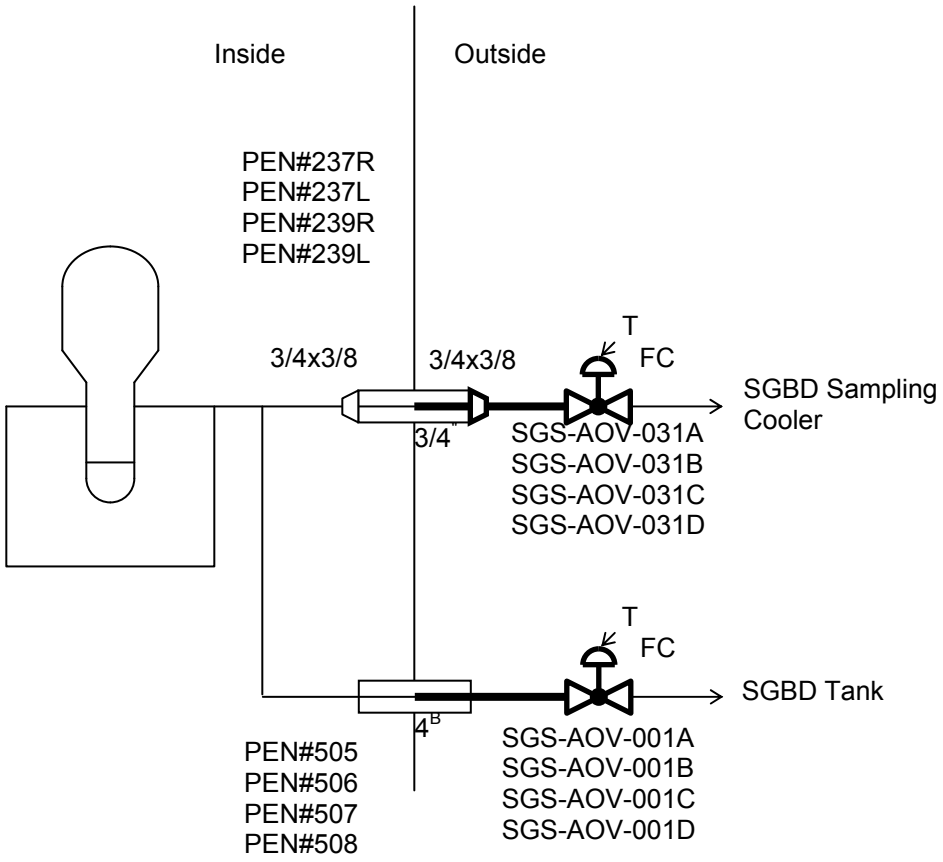

Figure 6.2.4-1 Containment Isolation Configurations (Sheet 31 of 50)

Refueling Water System

Refueling Water Recirculation Pump Suction Line

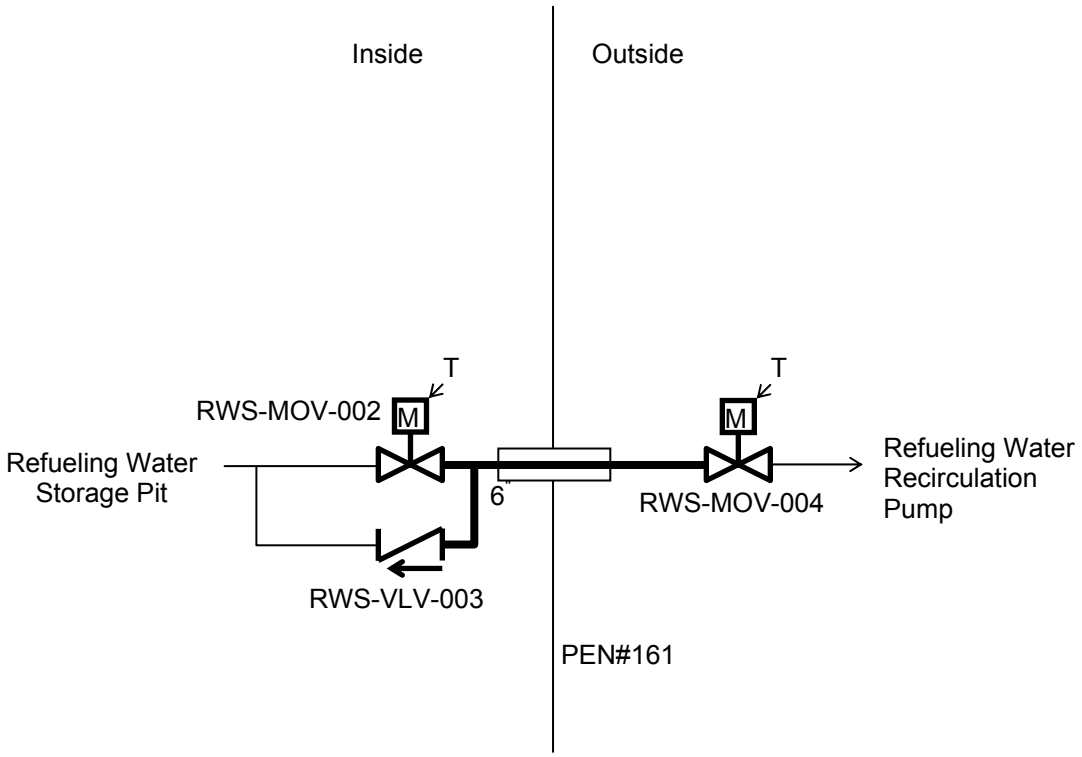

Figure 6.2.4-1 Containment Isolation Configurations (Sheet 32 of 50)

Refueling Water System

Refueling Water Recirculation Pump Discharge Line

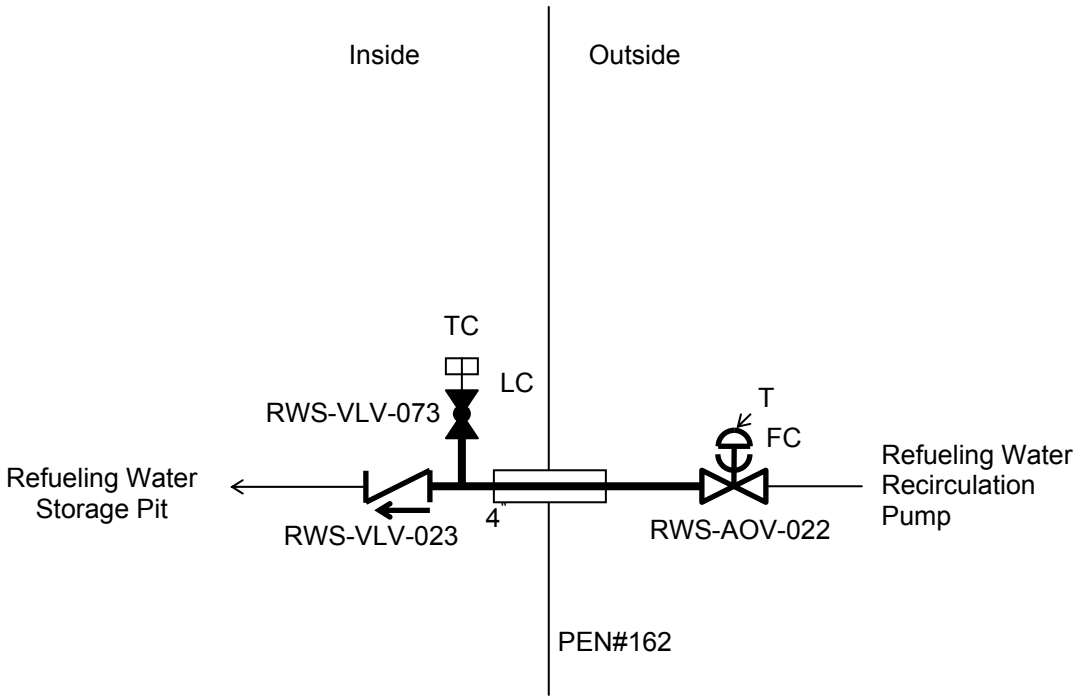

Figure 6.2.4-1 Containment Isolation Configurations (Sheet 33 of 50)

Primary Makeup Water System

Demineralized Water Supply Line

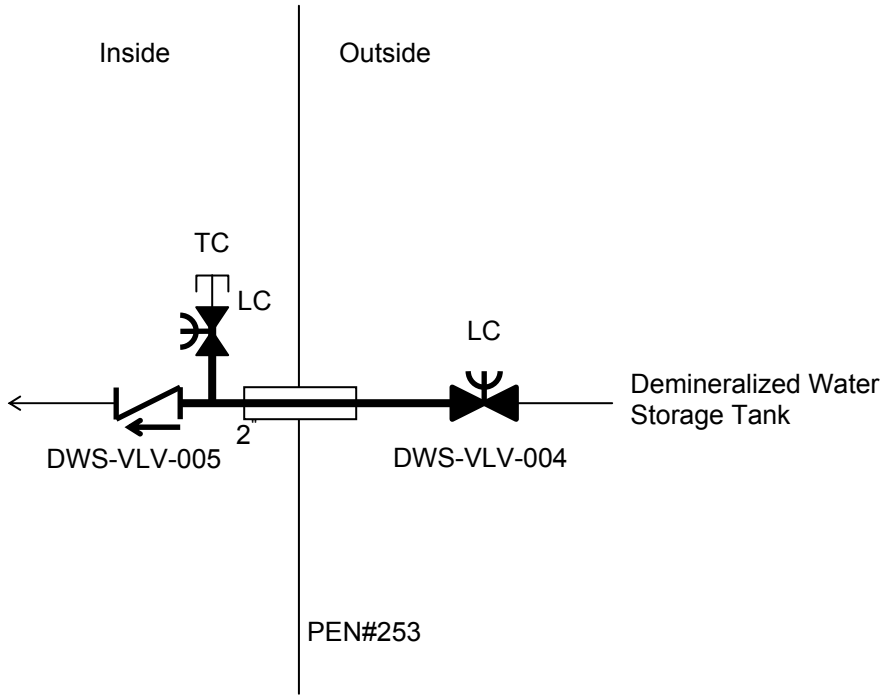

Figure 6.2.4-1 Containment Isolation Configurations (Sheet 34 of 50)

Instrument Air System

Instrument Air (IA) Line

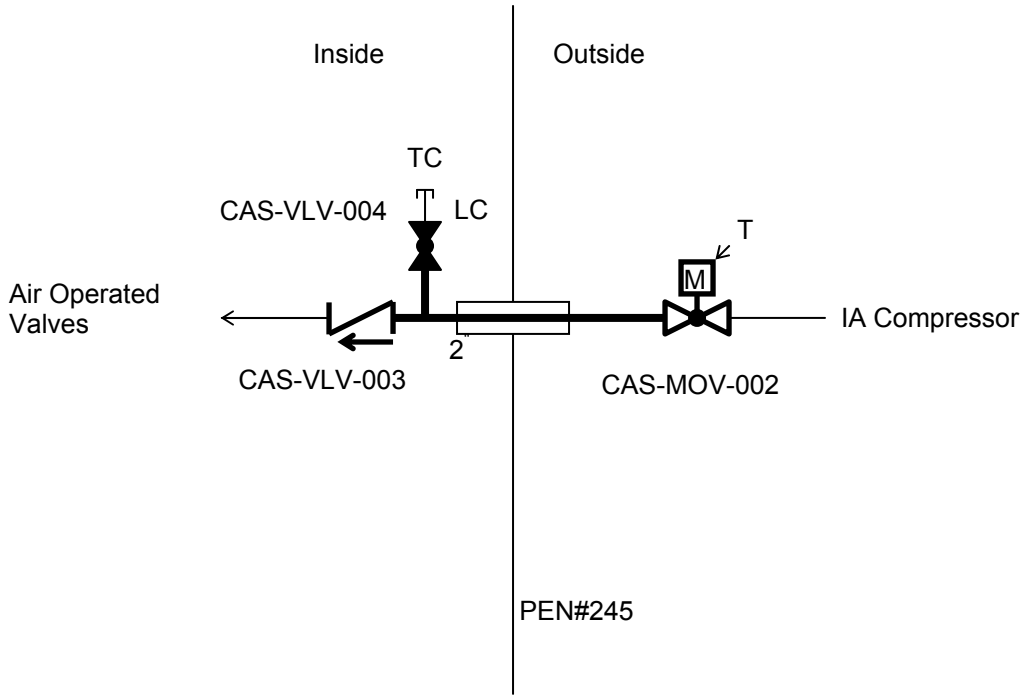

Figure 6.2.4-1 Containment Isolation Configurations (Sheet 35 of 50)

Fire Protection Water Supply System

Water Supply Line to Containment Air Purification Filter Unit

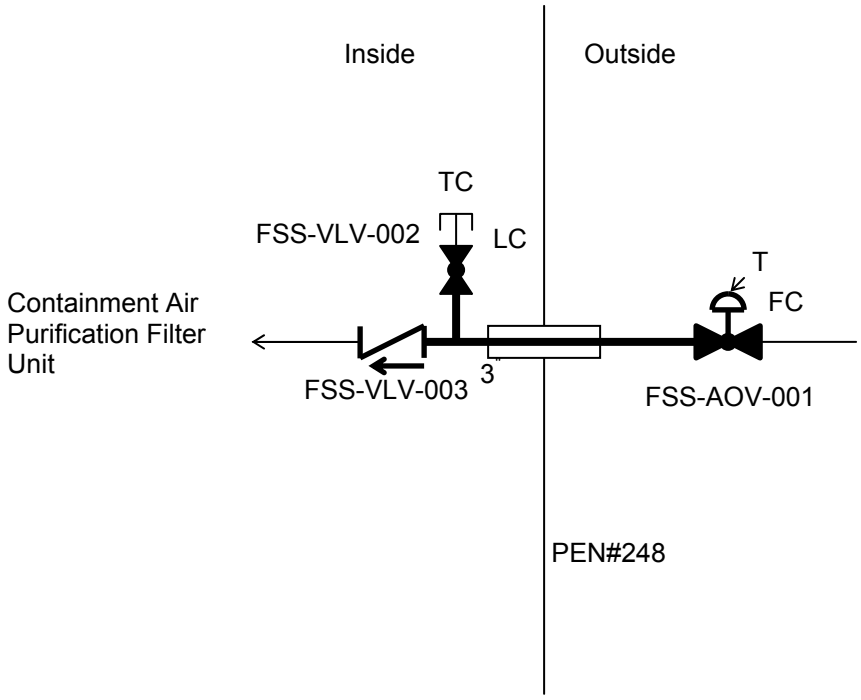

Figure 6.2.4-1 Containment Isolation Configurations (Sheet 36 of 50)

Fire Protection Water Supply System

Injection Line to Reactor Cavity

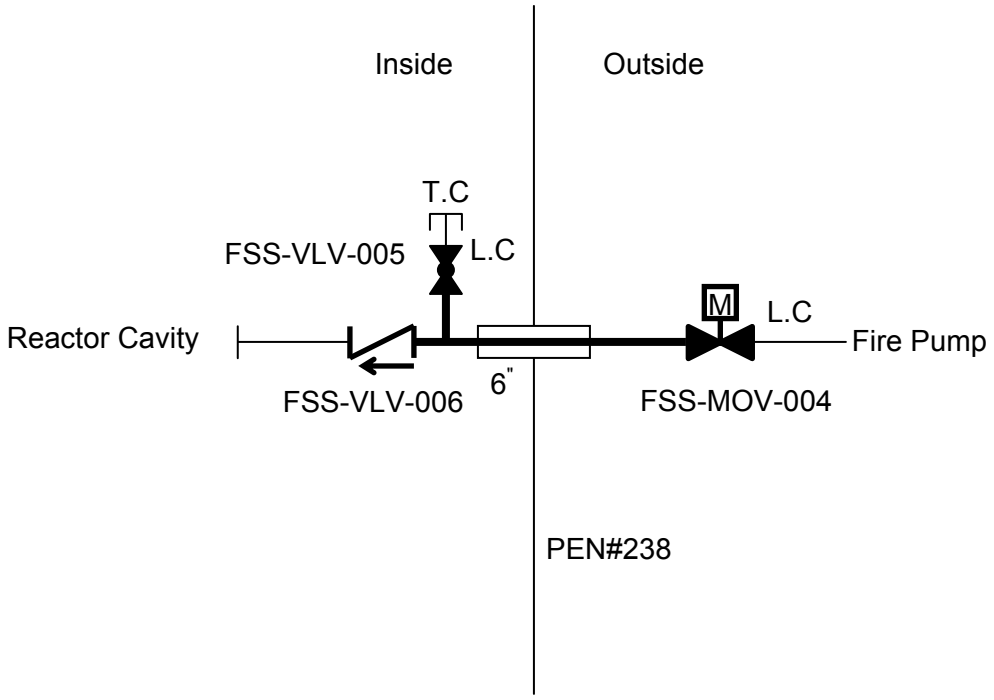

Figure 6.2.4-1 Containment Isolation Configurations (Sheet 37 of 50)

Station Service Air System

Service Air Line

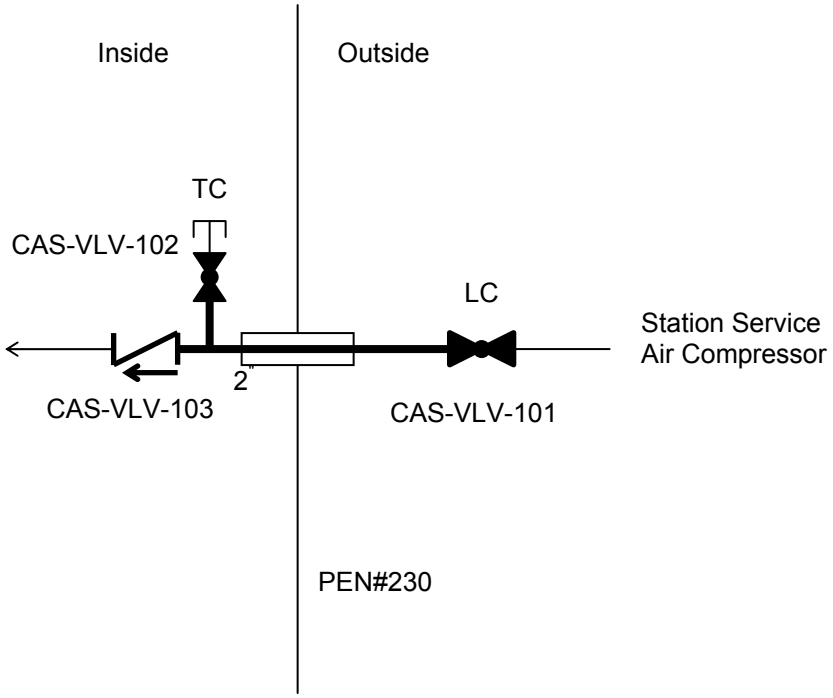

Figure 6.2.4-1 Containment Isolation Configurations (Sheet 38 of 50)

Fuel Transfer Tube

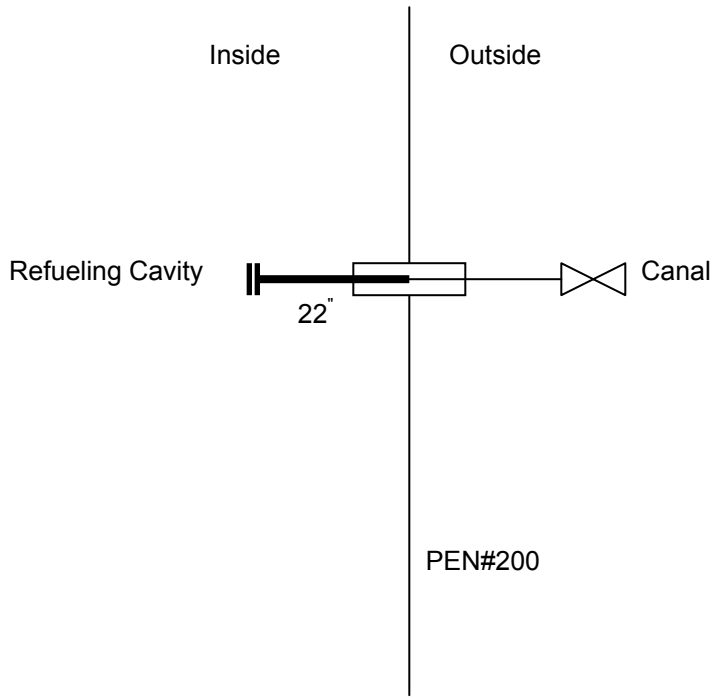

Figure 6.2.4-1 Containment Isolation Configurations (Sheet 39 of 50)

HVAC System (Containment Purge System)

Containment High Volume Purge Supply and Exhaust Line

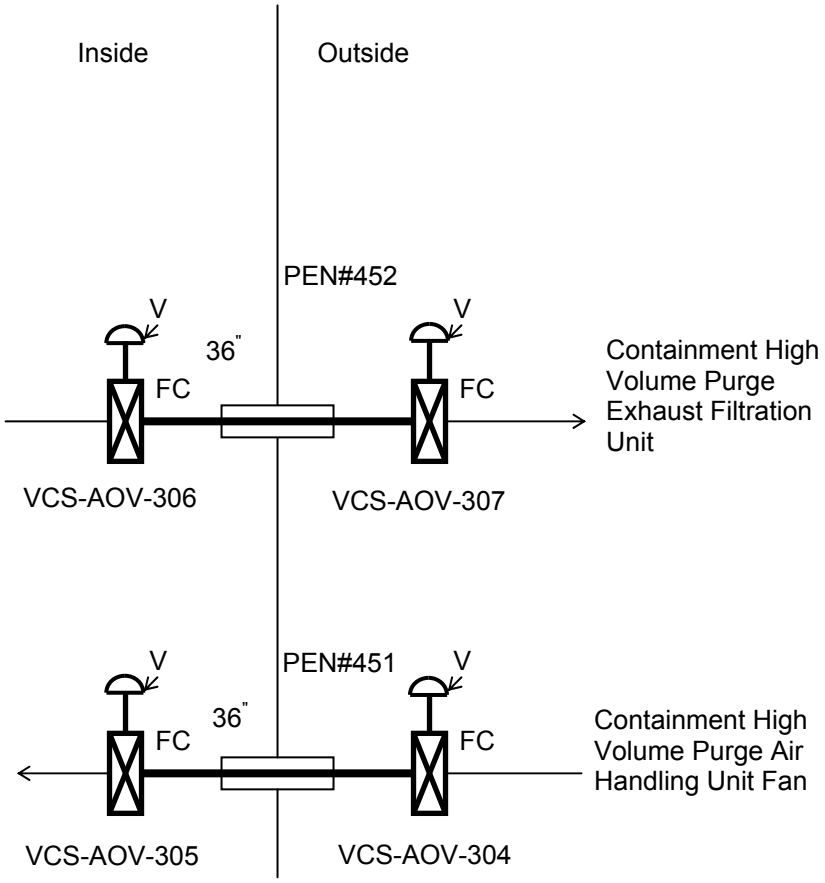

Figure 6.2.4-1 Containment Isolation Configurations (Sheet 40 of 50)

HVAC System (Containment Purge System)

Containment Low Volume Purge Supply and Exhaust Line

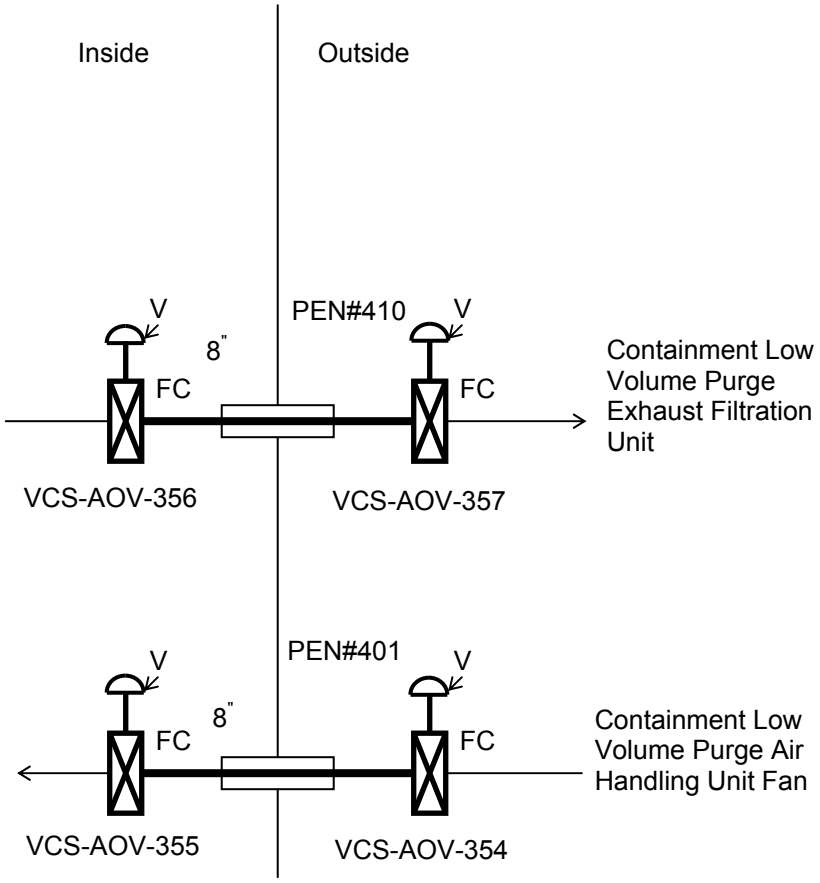

Figure 6.2.4-1 Containment Isolation Configurations (Sheet 41 of 50)

HVAC System (Containment Purge System)

Containment Pressure Detection Line

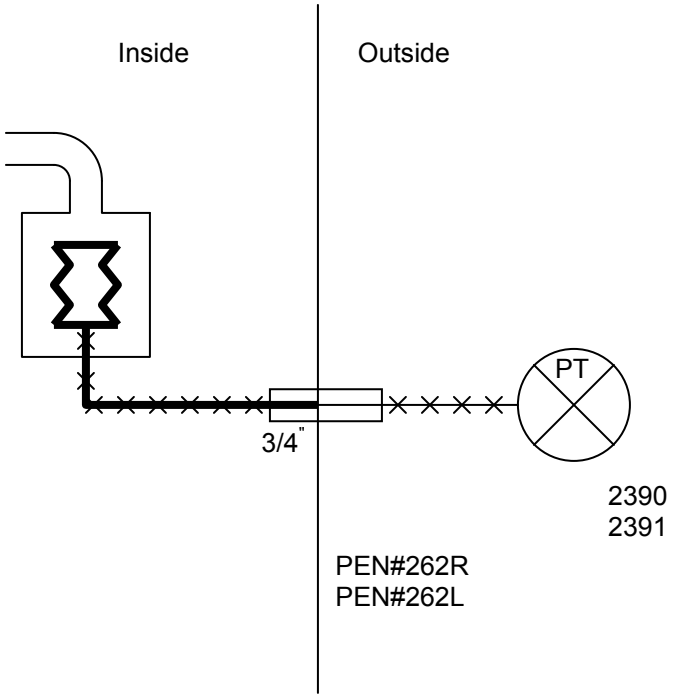

Figure 6.2.4-1 Containment Isolation Configurations (Sheet 42 of 50)

HVAC System (Non Essential Chilled Water System)

Containment Fan Cooler Line

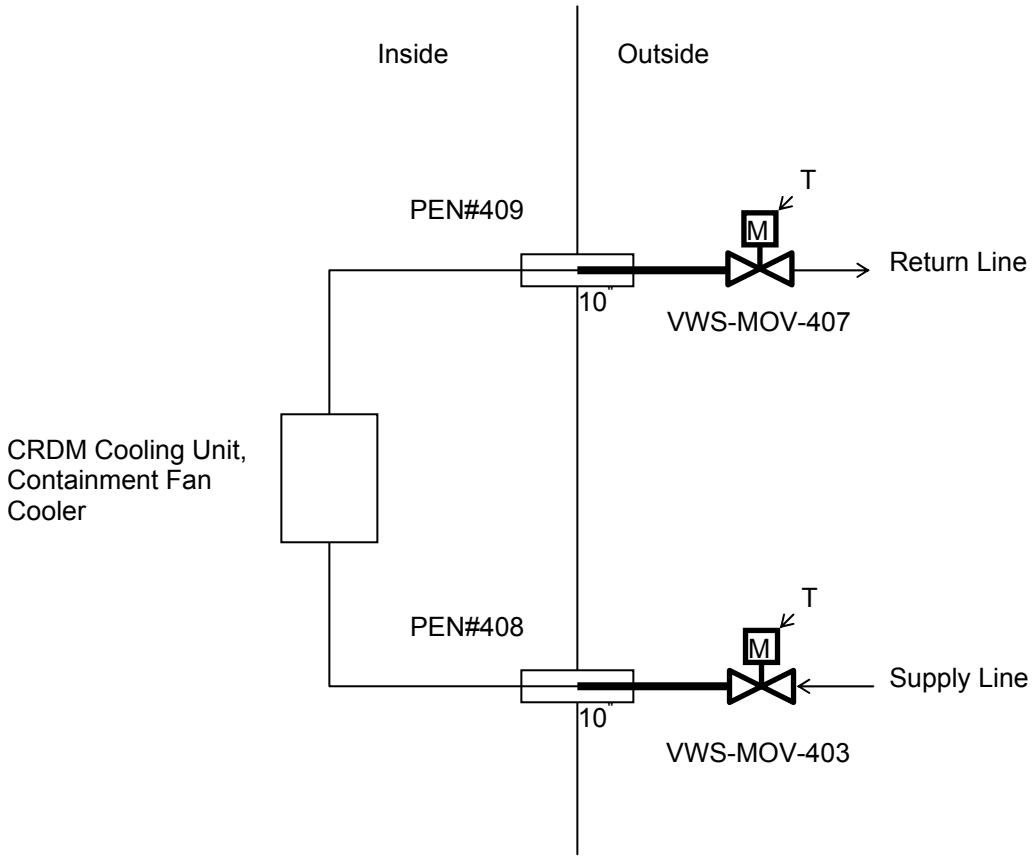

Figure 6.2.4-1 Containment Isolation Configurations (Sheet 43 of 50)

Plant Radiation Monitoring System

Containment Air Sampling Line

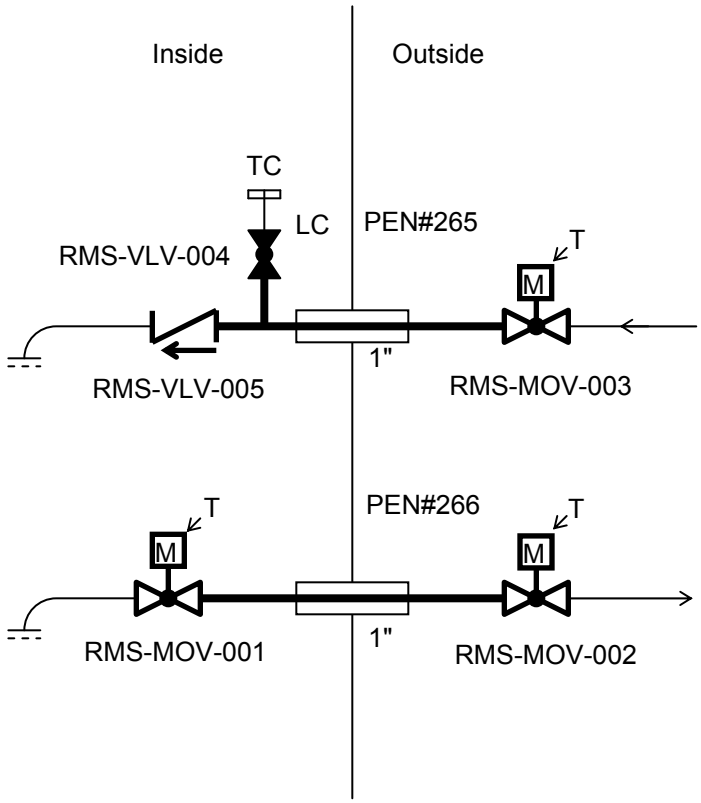

Figure 6.2.4-1 Containment Isolation Configurations (Sheet 44 of 50)

In-Core Instrument Gas Purge System

CO2 Purge Line

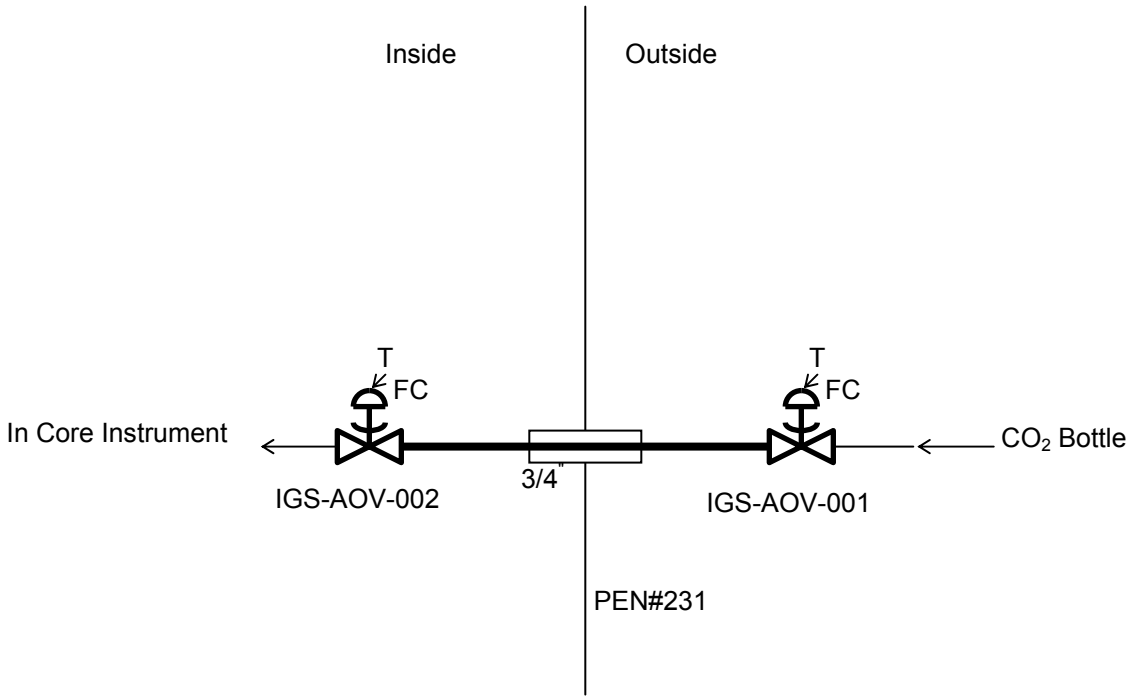

Figure 6.2.4-1 Containment Isolation Configurations (Sheet 45 of 50)

Containment Leak Rate Testing

Air Supply and Exhaust Line

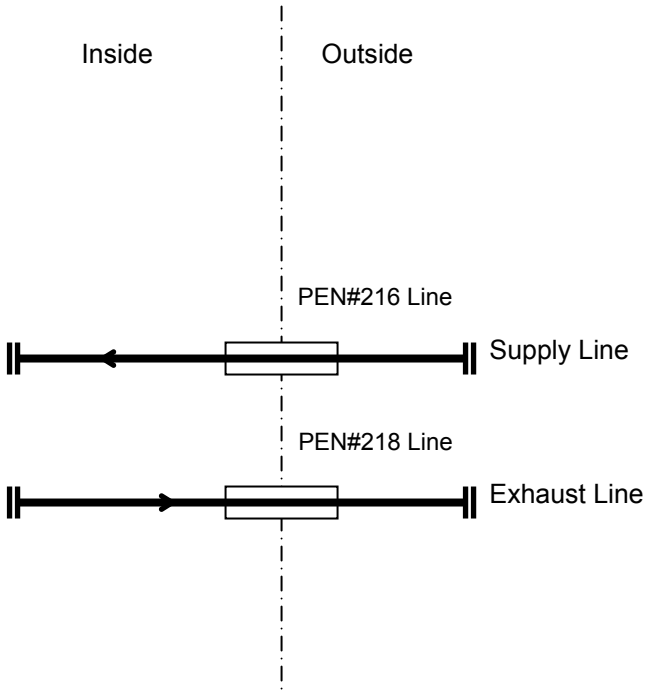

Figure 6.2.4-1 Containment Isolation Configurations (Sheet 46 of 50)

Containment Leak Rate Testing

Pressure Detection Line

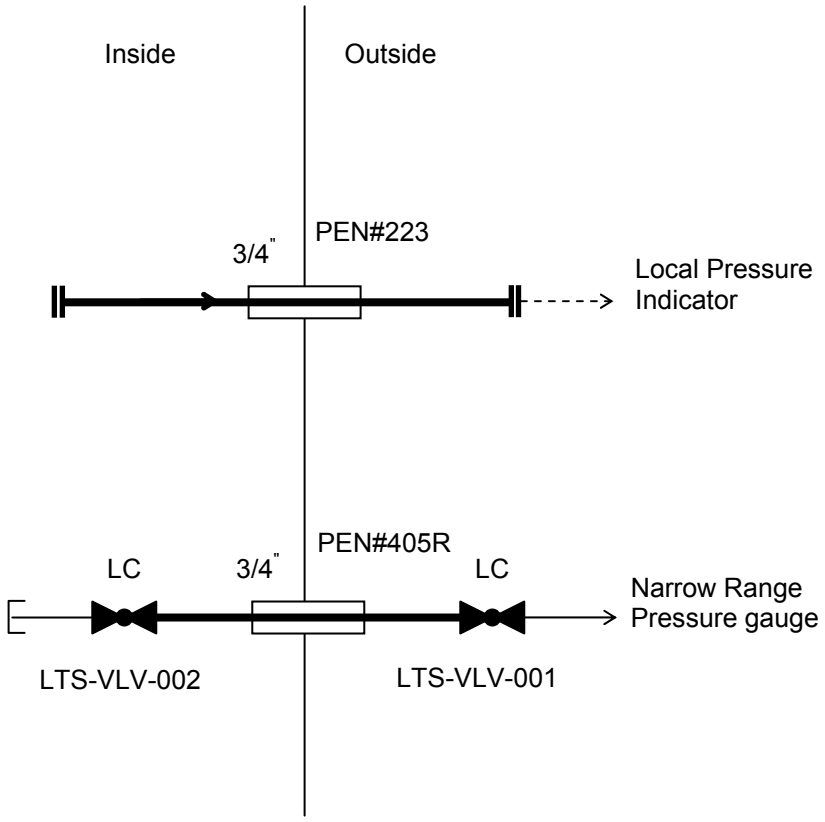

Figure 6.2.4-1 Containment Isolation Configurations (Sheet 47 of 50)

Others

Oil Supply and Drain Line for Reactor Coolant Pump Motor

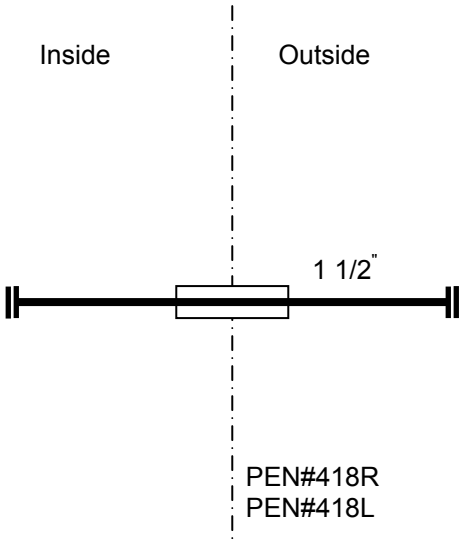

Figure 6.2.4-1 Containment Isolation Configurations (Sheet 48 of 50)

Others

Air Lock

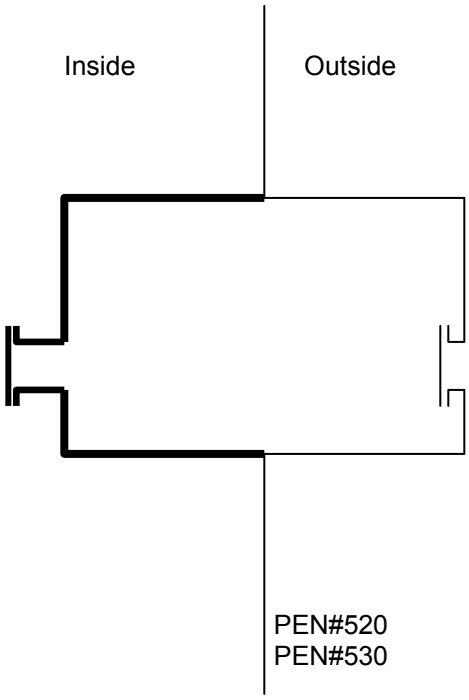

Figure 6.2.4-1 Containment Isolation Configurations (Sheet 49 of 50)

Others

Equipment Hatch

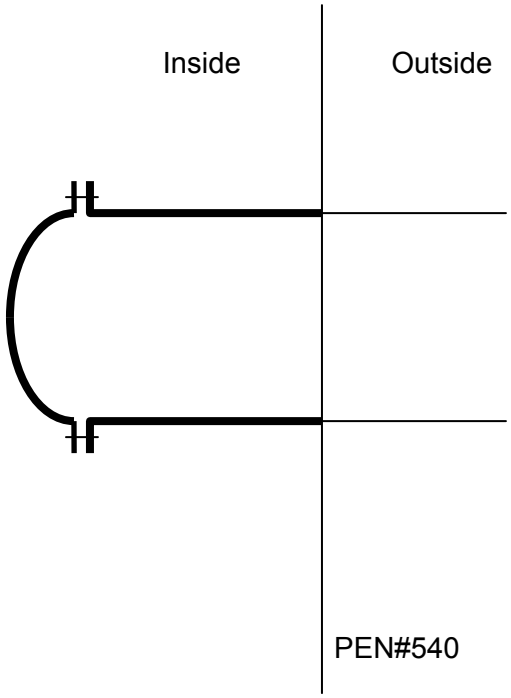

Figure 6.2.4-1 Containment Isolation Configurations (Sheet 50 of 50)

Security-Related Information – Withhold Under 10 CFR 2.390

Figure 6.2.5-1 Containment Hydrogen Monitoring and Control System Schematic

Security-Related Information – Withhold Under 10 CFR 2.390

Figure 6.2.5-2 Airflow Patterns in Response to CSS Operation (for Design Evaluation of Hydrogen Monitoring and Control System)

6.3 Emergency Core Cooling Systems

6.3.1 Design Bases

The emergency core cooling system (ECCS) consists of the Safety Injection System (SIS), which includes the high head injection system, the accumulator system, and the emergency letdown system. The light-water reactor design of the US-APWR ECCS is similar to the RESAR SP/90. The NRC published a final safety evaluation report (NUREG-1413 [Ref. 6.3-1]) for the reference safety analysis report (RESAR) SP/90 in April 1991, and issued a preliminary design approval.

The ECCS is designed to perform the following major safety-related functions:

- Safety Injection
- Safe Shutdown
- Containment pH Control

These functions are provided by safety-related equipment with redundancy to deal with single failure, environmental qualification, and protection from external hazards.

6.3.1.1 Safety Injection

The primary function of the ECCS is to remove stored and fission product decay heat from the reactor core following an accident. The ECCS meets the acceptance criteria of 10CFR50.46(b) (Ref. 6.3-2) for the following items:

- Peak cladding temperature
- Maximum calculated cladding oxidation
- Maximum hydrogen generation
- Coolable core geometry
- Long-term cooling

The ECCS flow diagram is presented in Figure 6.3-1. The ECCS automatically initiates with redundancy sufficient to ensure these functions are accomplished, even in the unlikely event of the most limiting single failure occurring coincident with, or during the event.

The SIS, in conjunction with the rapid insertion of the control rod cluster assemblies (reactor scram), provides protection in the following events:

- LOCA
- Ejection of a control rod cluster assembly
- Secondary steam system piping failure
- Inadvertent opening of main steam relief or safety valve

- SG tube rupture

6.3.1.2 Safe Shutdown

The portions of the ECCS also operate in conjunction with the other systems of the cold shutdown design. The primary function of the ECCS during a safety grade cold shutdown is to ensure a means for feed and bleed for boration, and make up water for compensation of shrinkage. Details of the safe shutdown design bases are discussed in Chapter 5, subsection 5.4.7.

6.3.1.3 Containment pH Control

NaTB baskets are located in the containment and are capable of maintaining the desired post-accident pH conditions in the recirculation water. The pH adjustment is capable of maintaining containment water pH at least 7.0, to enhance the retention capacity in the containment and to avoid stress corrosion cracking of the austenitic stainless steel components.

6.3.1.4 Compliance with Regulatory Requirements

The ECCS design complies with relevant rules, regulations, and regulatory requirements, including the following:

(1) GDC 2, “Design Bases for Protection Against Natural Phenomena”

(2) GDC 4, “Environmental and Dynamic Effects Design Bases”

(3) GDC 5, “Sharing of Structures, Systems, and Components”

(4) GDC 17, “Electric Power Systems”

(5) GDC 27, “Combined Reactivity Control Systems Capability”

(6) GDC 35, “Emergency Core Cooling”

(7) GDC 36, “Inspection of Emergency Core Cooling System”

(8) GDC 37, “Testing of Emergency Core Cooling System”

(9) 10 CFR 50.46, "Acceptance Criteria for Emergency Core Cooling Systems for Light-Water Nuclear Power Reactors"

Compliance with these GDCs is discussed in Chapter 3, Section 3.1. As for 10 CFR 50.46, it is described in subsection 6.3.1.1.

The ECCS design meets relevant items of TMI Action Plan requirements specified in 10 CFR 50.34(f), as described in Table 6.3-1.

The ECCS design incorporates the resolutions of the relevant Unresolved Safety Issues, and medium- and high-priority Generic Safety Issues that are specified in the current version of NUREG-0933, as described in Table 6.3-2 and Table 6.3-3.

The ECCS design incorporates operating experience insights from Generic Letters and Bulletins, as described in Table 6.3-4.

6.3.1.5 Reliability Design Bases

The reliability of the ECCS has been considered in selection of the functional requirements, selection of the particular components and location of components, and connected piping. Redundant components are provided where the loss of one component would impair reliability. Redundant sources of the safety injection signal (S signal) are available so that the proper and timely operation of the ECCS is ensured. Sufficient instrumentation is available so that failure of an instrument does not impair readiness of the system. The active components of the ECCS are normally powered from separate buses which are energized from offsite power supplies. In addition, redundant sources of emergency onsite power are available through the use of the emergency power sources to ensure adequate power for all ECCS requirements. Each emergency power source is capable of providing sufficient power to all pumps, valves, and necessary instruments associated with one train of the ECCS.

The ECCS is located in the Reactor Building and the Containment. Both structures are Seismic Category I and provide tornado missile barriers to protect the ECCS. The SIS receives normal power and is backed up with onsite Class 1E emergency electric power as noted in Chapter 8. The ECCS includes four 50% capacity SI pump trains. This design provides sufficient flow even if one train is out of service for maintenance and another one becomes inoperable due to a single failure upon the initiation of the ECCS. The SIS is designed with redundancy sufficient to ensure reliable performance, including the failure of any component coincident with occurrence of a design basis event, as discussed in Chapters 3, 7, and 15. One accumulator is provided for each loop. Accumulator sizing is based on three accumulators to account for loss of coolant from the accumulator installed on the broken loop during a LOCA. The spilled coolant from the accumulator on the broken loop does not contribute to the core injection.

Subsection 6.2.1, discusses the containment environmental conditions during accidents, and Chapter 3, Section 3.11, discusses the suitability of equipment for design environmental conditions. All valves required to be actuated during ECCS operation are located so as to prevent vulnerability to flooding.

Protection of the ECCS from missiles is discussed in Chapter 3, Section 3.5. Protection of the ECCS against dynamic effects associated with the rupture of piping is described in Section 3.6. Protection from flooding is discussed in Section 3.4.

6.3.2 System Design

6.3.2.1 Schematic Piping and Instrumentation Diagrams

Figure 6.3-1 is a simplified flow diagram of the ECCS. Figure 6.3-2 is the piping and instrumentation diagram showing system locations for all components, including system interconnections, instruments, alarms and indications. Chapter 7, Section 7.3, discusses

the instrumentation and control, including the actuation logic, the component redundancy, the system interlocks, and the indication for the SIS.

6.3.2.1.1 High Head Injection System

There are four independent and dedicated SI pump trains. The SI pump trains are automatically initiated by a S signal, and supply boric acid water (at approximately 4,000 ppm boron) from the RWSP to the reactor vessel. Each 50% capacity train includes a safety injection pump suction isolation valve , a dedicated, 50% capacity SI pump, a safety injection pump discharge containment isolation valve, a direct vessel safety injection line isolation valve, and a hot leg injection isolation valve.

Figure 6.3-3 presents an elevation drawing of the SIS. System piping would normally be filled and vented from the RWSP to the reactor vessel injection nozzles at elevation 39.3 ft. prior to startup. Thus, the injection piping is completely filled with water. A series of four check valves are installed between each SI pump and the direct vessel injection (DVI) nozzles at the reactor vessel. This series of check valves provides a “keep full” function, while preventing a drain-down to the RWSP. As shown, 24.2 ft. are available between the 100% RWSP level at elevation 19.5 ft., and the highest SI piping at elevation 43.7 ft. Using a conservative value of 120°F, which is the maximum operating temperature in containment, a static head 30 ft. high is required for water column separation. Void formation due to water column separation in the SI piping is precluded and no delay is assumed between the system initiation and the injection flow into the reactor vessel downcomer. This design feature minimizes the potential for water hammer. The ECCS delivery lag time is provided in Chapter 15, “Transient and Safety Analyses”. Table 6.2.1-5 provides ESF system parameter information relating to ECCS and CSS actuation timing.

Each 50% capacity SI pump train is connected to a dedicated DVI nozzle for injection into the reactor downcomer region. The DVI nozzles are located at approximately the same vessel elevation as the reactor coolant hot and cold leg penetrations, but slightly below their nozzle centerline.

6.3.2.1.2 Accumulator System

There are four accumulators, one supplying each reactor coolant cold leg. The accumulators are vertically mounted cylindrical tanks located outside each SG/reactor coolant pump cubicle. The accumulators are passive devices. The accumulators are filled with boric acid water and charged with nitrogen. The accumulators discharge into the reactor cold leg when the cold leg pressure falls below the accumulator pressure.

The accumulators incorporate internal passive flow dampers, which function to inject a large flow to refill the reactor vessel in the first stage of injection, and then reduce the flow as the accumulator water level drops. When the water level is above the top of the standpipe, water enters the flow damper through both inlets at the top of the standpipe and at the side of the flow damper, and injects water with a large flow rate. When the water level drops below the top of the standpipe, the water enters the flow damper only through the side inlet, and injects water with a relatively low flow rate (Ref. 6.3-3).

The two series check valves in the supply line to the reactor cold leg are held closed by the pressure differential between the RCS and the accumulator charge pressure (approximately 1,600 pounds per square inch differential [psid]). The accumulator water level, boron concentration, and nitrogen charge pressure can all be remotely adjusted during power operations. The accumulators are non-insulated and assume thermal equilibrium with the containment normal operating temperature (approximately 70 to 120°F).

The accumulators are charged by a flow control valve in a common nitrogen supply line. The failure of the flow control valve is accommodated by a safety valve set at 700 psig and having a (nitrogen) flow capacity of 90,000 ft^3 per hour. Likewise, each accumulator is equipped with a safety valve set at 700 psig and (nitrogen) flow capacity of 90,000 ft^3 per hour, which provides a margin from the normal operating pressure (640 psig), yet precludes overcharging by the associated SI pump.

6.3.2.1.3 Emergency Letdown System

The emergency letdown system provides redundancy to the normal CVCS in achieving cold shutdown boration conditions. Two emergency letdown lines (one each from reactor hot legs B and D) direct reactor coolant to spargers in the RWSP. The SI pumps return more highly borated RWSP water (approximately 4,000 ppm boron) to the reactor vessel through each pump's DVI nozzle, or to each associated reactor hot leg.

6.3.2.2 Equipment and Component Descriptions

6.3.2.2.1 Safety Injection Pumps

The SI pumps are horizontal, multi-stage centrifugal type pumps. The design flow of the SI pumps is 1,540 gpm at 1,640 ft. design head. The pumps are made of stainless steel. Figure 6.3-4 presents the SI pump characteristic curve. Table 6.3-5 presents the relevant SI pump data.

For an assumed large-break LOCA, the SI pumps are sized to deliver 2,113 gpm of injection flow following 180 seconds of small accumulator injection flow. The accumulator flow rates and sequence noted above, followed by this SI flow rate, ensure that the level in the reactor vessel downcomer is maintained for re-flooding the core. This SI pump flow rate is based on two SI pumps operating (active failure of one SI pump and one SI pump out of service), with each SI pump delivering 1,057 gpm against near atmospheric pressure.

For an assumed small-break LOCA, 757 gpm SI pump flow is required to maintain the core re-flooding conditions. This SI flow rate is maintained by one SI pump against 972 psig reactor pressure.

The design temperature of the SI pumps is 300°F, which is consistent with the design temperature of the containment. The RWSP, which is the water source of the SI pumps, is located in the containment. The design pressure of the SI pumps is 2,135 psig. This

value provides margin to 2,028 psig, which is the sum of the design pressure of containment (68 psig) and the shutoff pressure of the SI pumps (1,960 psig).

6.3.2.2.2 Accumulators

The accumulators are constructed of carbon steel and clad with stainless steel, have a design pressure of 700 psig (normal operating pressure of approximately 640 psig), and a design temperature of 300°F. Thus, injection is a passive function that occurs without a signal or an operator action when the reactor coolant pressure falls below the accumulator charge pressure. The accumulators are of a dual flow rate design; there is a large accumulator flow during blowdown and refill phase, followed by a small accumulator flow rate of longer duration to establish the core re-flood conditions in conjunction with the SI pumps. Figure 6.3-5 presents the accumulator flow schematic characteristics during the blowdown/refill and re-flood phase. Figure 6.3-6 presents a simplified view of the dual flow rate accumulator design. Table 6.3-5 presents the relevant accumulator data.

The capacity of the accumulators is based on the volume of the downcomer and lower plenum regions of the reactor vessel, which is approximately 2,295 ft^3. For analysis purposes, the volume assumed is approximately 2,613 ft^3, which includes a safety margin. Although four accumulators are provided, accumulator sizing is based on three accumulators to account for unavailability of flow from the accumulator installed on the broken loop during a LOCA whose contents are assumed to spill to the containment so that it does not contribute to the core injection. One third of the remaining accumulator volume is also assumed to be lost to the spill through the postulated pipe break. Two thirds of the remaining accumulator volume is available for injection. The required capacity of each accumulator at the large injection flow rate is approximately 1,307 ft^3, which is increased to approximately 1,342 ft^3.

To maintain downcomer water level and establish post-LOCA core re-flood conditions, large accumulator injection flow is followed by an assumed 180 seconds of accumulator injection flow at a small flow rate (followed by the injection flow from the SI pumps). The required capacity of each accumulator at the small injection flow rate is approximately 724 ft^3, which is increased to approximately 784 ft^3.

The volume of each accumulator (2,126 ft^3) includes the volume (1,342 ft^3 plus 784 ft^3) associated with both the large and small injection flow rates, respectively. Considering the total water volume (2,126 ft^3) and adding the volume of gas space and dead water volume, the required volume of a single accumulator is 3,180 ft^3 (Ref. 6.3-3).

The design temperature of the accumulator is 300°F which is consistent with the design temperature of the containment where the accumulators are located. The design pressure of the accumulator is 700 psig. This value provides margin to the normal operating pressure (i.e., nitrogen pressure) of 640 psig.

The flow rate coefficient and uncertainty of the flow damper is described in Ref. 6.3-3 and Ref. 6.3-4.

6.3.2.2.3 Refueling Water Storage Pit

The RWSP is designed to have a sufficient inventory of boric acid water for refueling and long-term core cooling during a LOCA. A minimum of 81,230 ft^3 of available water is required in the RWSP. Sufficient submerged water level is maintained to secure the minimum NPSH for the SI pumps. The RWSP capacity includes an allowance for instrument uncertainty and the amount of holdup volume loss within the containment.. The capacity of the RWSP is optimized for a LOCA in order to prevent an extraordinarily large containment. Therefore, a refueling water storage auxiliary tank containing 47,680 ft^3 is provided separately outside the containment to ensure that the required volume for refueling operations is met. Table 6.3-5 presents the relevant RWSP data. Detail description of structure and capacity of RWSP is provided in subsection 6.2.2.2.

The temperature during normal operation is in a range of 70 to 120°F. The peak temperature following a LOCA is approximately 250°F.

The boric acid water in the RWSP is purified using the refueling water storage system (RWS). The RWS is shown in Figure 6.3-7 and may be cross-connected to one of two SFPCS filter and demineralizer vessels to remove the solid materials and the dissolved impurities for purification. The capacity of the purification subsystem is designed to maintain the chemistry of the spent fuel pool, the refueling cavity, the refueling water storage auxiliary tank, and the RWSP. Chapter 9, subsection 9.1.3, discusses the SFPCS purification of the boric acid water.

6.3.2.2.4 ECC/CS Strainers

Four independent sets of strainers are provided inside the RWSP as part of the ECCS and CSS. ECC/CS strainers are provided for preventing debris from entering the safety systems, which are required to maintain the post-LOCA long-term cooling performance. ECC/CS strainers are designed to comply with RG 1.82. Strainer compliance with RG 1.82 is discussed in subsection 6.2.2.

The RWSP is located at the lowest part of the containment in order to collect containment spray water and blowdown water by gravity. It is compartmentalized by a concrete structure against the upper containment area. Connecting pipes that drain the collected water from the upper containment are provided in the ceiling of the RWSP. The fully submerged strainers are installed on the bottom floor of the RWSP inside containment at elevation 3 ft. - 7 in. Below the strainers at elevation -3 ft. - 7 in. is the bottom of the RWSP sumps. Table 6.3-5 presents relevant ECC/CS strainer data.

The fully submerged strainers, in combination with the SI pump elevation, provide sufficient NPSH to ensure continuous suction availability without cavitation during all postulated events requiring the actuation of the ECCS.

The strainer sizing accommodates the estimated amount of debris potentially generated in containment.

The RWSP water chemistry is controlled so as to minimize the chemical effects between the sump water and potentially corrosive materials in containment is considered.

The COL Applicant is responsible for developing a program to maintain RWSP water chemistry including surveillance test procedures .

6.3.2.2.5 NaTB Baskets and NaTB Basket Containers

Crystalline NaTB additive is stored in the containment and is used to raise the pH of the RWSP from 4.3 to at least 7.0 post-LOCA. The chemical composition of NaTB is $Na_2B_40_7 \cdot 10\ H_20$. (Sodium tetra-borate decahydrate is also known as “borax” and can be written $B_4O_7Na_2 \cdot 10\ H_20$.)

The total weight of NaTB contained in the baskets is at least 44,100 pounds to raise the pH of the borated water in the containment following an accident to at least 7.0.

Twenty-three NaTB baskets are placed in the containment to maintain the desired post-accident pH conditions in the recirculation water. The buffering agent is mixed with the recirculation water in the containment so that the desired post-accident pH conditions in the recirculation water is maintained.

Twenty three NaTB baskets are divided and installed into three NaTB basket containers. Figure 6.3-8 and Figure 6.3-9 are the plan and sectional views of the NaTB baskets and NaTB basket containments installation, which are located on the maintenance platform in the containment at elevation 121 ft. - 5 in. The upper lips of the NaTB Basket Containers are approximately 1 ft. - 7 in. above the top of the NaTB baskets. This allows for the full immersion of the baskets and the optimum NaTB transfer to the RWSP.

The NaTB basket containers include the following number of NaTB baskets:

- Container A: Nine NaTB baskets
- Container B: Seven NaTB baskets
- Container C: Seven NaTB baskets

The top face of each container is open to receive spray water from the CSS nozzles during an accident and, after a period-of-time, each container is filled with spray water. As shown in Figure 6.3-9, spray ring D is located directly above the NaTB baskets at elevation 131 ft. - 6 in. Figure 6.3-10 and Figure 6.3-11 present the plan and sectional views of the spray distribution, coverage patterns, and spray trajectories for the NaTB baskets. Subsection 6.2.2 provides a discussion of the CSS.

The top face of the refueling cavity is open and blanketed by the containment spray during an accident. The spray water, which flows into the refueling cavity, is drained through the two refueling cavity drain pipes to the RWSP.

NaTB in baskets is dissolved in spray water in the containers. The solution containing NaTB is discharged from each container to the RWSP through 4-inch diameter NaTB solution transfer pipes. NaTB solution transfer pipes connect to the 10-inch diameter refueling cavity drain pipes at the inlet of the RWSP and the solution flows into the RWSP after being mixed and diluted by the water drained from the refueling cavity.

Figure 6.3-12 shows the NaTB solution transfer piping. This piping transfers NaTB solution to the RWSP by gravity.

The size of the NaTB transfer pipes and refueling cavity drain pipes are selected to minimize the head loss during a transfer of solution. The containerized NaTB solution overflows at the same flow rate as the spray water that flows into the container. Therefore, the NaTB dissolved in the container flows into the RWSP without losses from spilling over onto the containment operating floor. The dissolution time of the NaTB is approximately 12 hours.

The design temperature of the baskets and containers is 300°F, which is consistent with the design temperature of the containment, where the baskets and containers are located. The design pressure of the baskets and containers is atmospheric pressure. The baskets and containers are not closed vessels, but are open to containment atmosphere.

6.3.2.2.6 Major Valves

Containment isolation is discussed in subsection 6.2.4. Control (including interlocks) and automatic features of containment isolation valves are discussed in Chapter 7, section 7.3.

6.3.2.2.6.1 Safety Injection Pump Suction Isolation Valve

There is a normally open motor-operated gate valve in each of the four SI pump suction lines from the RWSP. These valves remain open during normal and emergency operations. The valves are remotely closed by operator action from the MCR and RSC only if an SIS line has to be isolated from the RWSP to terminate a leak or if pump/valve maintenance specifically requires it. The open or closed valve position, for these valves, is indicated in the MCR and RSC. The four safety injection pump suction isolation valves (SIS-MOV-001A, B, C, and D) are Equipment Class 2, Seismic Category I.

6.3.2.2.6.2 Safety Injection Pump Discharge Containment Isolation Valve

There is a normally open motor-operated gate valve in each pump discharge line that serves as the outboard containment isolation valve. These valves can be closed remotely by operator action from the MCR and RSC if containment isolation is required. The open or closed valve position, for these valves, is indicated in the MCR and RSC. The four safety injection pump discharge containment isolation valves (SIS-MOV-009A, B, C, and D) are Equipment Class 2, Seismic Category I.

6.3.2.2.6.3 Direct Vessel Safety Injection Line Isolation Valve

There is a normally open motor-operated globe valve, with throttling capability, which can control the flow downstream of each of the four DVI lines inside the containment. The valves are remotely closed for switchover to the hot leg injection by operator action from the MCR and RSC in the event of a LOCA. These valves provide the capability to control the SI pump flow to maintain the RCS inventory during safe shutdown. The open or closed valve position, for these valves, is indicated in the MCR and RSC. The four

direct vessel safety injection line isolation valves (SIS-MOV-011A, B, C, and D) are Equipment Class 2, Seismic Category I.

6.3.2.2.6.4 Hot Leg Injection Isolation Valve

There is a normally closed motor-operated globe valve in each of the four hot leg injection lines. These valves are remotely opened by operator action from the MCR and RSC to initiate hot leg injection. The open or closed valve position, for these valves, is indicated in the MCR and RSC. The four hot leg injection isolation valves (SIS-MOV-014A, B, C, and D) are Equipment Class 1, Seismic Category I.

6.3.2.2.6.5 Safety Injection Pump Full-flow Test Line Stop Valve

One normally closed motor-operated globe valve, with a throttling capability, is installed in each of four SI pump test lines. These valves have their control power locked out during normal plant operation. The test lines are located inside the containment and are routed from the pump test discharge lines to the RWSP.

These valves are remotely opened by operator action from the MCR and RSC when the pumps are aligned for pump full-flow test. The open or closed valve position, for these valves, is indicated in the MCR and RSC. The four safety injection pump full-flow test line stop valves SIS-MOV-024A, B, C, and D are Equipment Class 2, Seismic Category I.

6.3.2.2.6.6 Accumulator Discharge Valve

There is a normally open motor-operated gate valve, which has its control power locked out during normal plant operation, in each of the four accumulator discharge lines. These valves are closed only during normal shutdown operation (prior to reducing pressure below 1,000 psig) to prevent the accumulator from inadvertently discharging into the RCS during cooldown. All four accumulators are assumed ready to inject when the RCS is pressurized. The open or closed valve position, for these valves, is indicated in the MCR and RSC. The four accumulator discharge valves (SIS-MOV-101A, B, C, and D) are Equipment Class 2, Seismic Category I.

These valves are remotely opened during startup by operator action from the MCR and RSC when the RCS pressure increases above the SI un-blocking pressure. If the RCS pressure is above the P-11 setpoint and these valves are closed, an alarm is received in the MCR and RSC, and these valves are automatically opened. A confirmatory-open interlock is provided to automatically open the valves upon the receipt of a S signal to ensure that the valves are opened, aligning the SI flowpath following an accident. The accumulators are then capable of passively initiating SI if the RCS pressure decreases below accumulator pressure.

6.3.2.2.6.7 Accumulator Nitrogen Supply Line Isolation Valve

There is a normally closed motor-operated globe valve in each of the accumulator nitrogen supply lines in the containment. These valves may be opened by operator action from the MCR and RSC when the nitrogen system is charged. These valves are also opened when the accumulator is depressurized with the opening of the accumulator

nitrogen discharge valve in subsection 6.3.2.2.6.9 below. The open or closed valve position, for these valves, is indicated in the MCR and RSC. The four accumulator nitrogen supply line isolation valves (SIS-MOV-125A, B, C, and D) are Equipment Class 2, Seismic Category I.

6.3.2.2.6.8 Accumulator Nitrogen Discharge Pressure Control Valve

There is an air-operated vent valve in the nitrogen supply header inside the containment. This valve may be opened by operator action from the MCR and RSC to discharge nitrogen gas from an accumulator to containment. The open or closed valve position is indicated in the MCR and RSC. The accumulator nitrogen discharge pressure control valve (SIS-HCV-917) fails closed and is Equipment Class 2, Seismic Category I.

6.3.2.2.6.9 Accumulator Nitrogen Discharge Valve

Two normally closed motor-operated globe valves are installed in the accumulator nitrogen supply line to discharge nitrogen gas from the accumulators to the containment. If an accumulator discharge valve is not closed during safe shutdown due to a single failure, this valve can be manually opened by operator action from the MCR and RSC, depressurizing the accumulator to prevent the accumulator from inadvertently discharging nitrogen gas into the RCS. The open or closed valve position, for these valves, is indicated in the MCR and RSC. The two accumulator nitrogen discharge valves (SIS-MOV-121A and B) are Equipment Class 2, Seismic Category I.

6.3.2.2.6.10 Accumulator Nitrogen Supply Pressure Control Valve

An air-operated modulating globe valve is located in the accumulator nitrogen supply header outside the containment. The valve automatically controls the pressure of nitrogen gas supplied from the plant gas system to the accumulators. The accumulator nitrogen supply pressure control valve (SIS-PCV-916) fails closed and is Equipment Class 4, Non-Seismic Category.

6.3.2.2.6.11 Safety Injection Pump Accumulator Makeup Valve

One normally closed air-operated globe valve, which has its control power locked out, is located in each of the two accumulator makeup lines which branches downstream of the containment isolation check valves in two of the four SI pump discharge lines. The valves are opened by operator action from the MCR and RSC, when required to provide makeup borated water to the accumulators. The open or closed valve position, for these valves, is indicated in the MCR and RSC. The safety injection pump accumulator makeup valves (SIS-AOV-201A and D) fail closed and are Equipment Class 2, Seismic Category I.

6.3.2.2.6.12 Accumulator Makeup Valve

There is a normally closed air-operated valve in each of the four accumulator makeup lines. The valves are opened by operator action from the MCR and RSC, when required to provide makeup boric acid water to the respective accumulator. The open or closed valve position, for these valves, is indicated in the MCR and RSC. The accumulator

makeup valves (SIS-AOV-215A, B, C, and D) fail closed and are Equipment Class 2, Seismic Category I.

6.3.2.2.6.13 Accumulator Makeup Flow Control Valve

There is an air-operated modulating globe valve in the accumulator makeup line. This valve may be controlled by operator action from the MCR and RSC to provide makeup borated water to the respective accumulator. The open or closed valve position is indicated in the MCR and RSC. The one accumulator makeup flow control valve SIS-HCV-989 fails closed and is Equipment Class 2, Seismic Category I.

6.3.2.2.6.14 Accumulator Nitrogen Supply Header Safety Valve

A safety valve is located on the accumulator nitrogen supply header inside the containment. Its size and setpoint are selected to protect the piping and accumulator from over-pressure due to the mis-operation of the accumulator nitrogen supply control valve. The accumulator nitrogen supply header safety valve (SIS-VLV-116) is Equipment Class 2, Seismic Category I.

6.3.2.2.6.15 Accumulator Safety Valve

A safety valve is provided for each accumulator to prevent over-pressure due to either a RCS back-leakage during normal operation or mis-operation of the SI pump during accumulator filling or makeup. The accumulator safety valves (SIS-VLV-126A, B, C, and D) are Equipment Class 2, Seismic Category I.

6.3.2.2.6.16 Accumulator Injection Line Check Valve

Two swing check valves in series are aligned in each accumulator injection line. The first valve serves to prevent the flow from the RCS into the accumulator portion of the SIS. The second valve serves as a backup in the event that the first valve develops a leakage through the valve seating surfaces. The 1st and 2nd accumulator injection line check valves (SIS-VLV-102A, B, C, and D) and (SIS-VLV-103A, B, C, and D) are Equipment Class 1, Seismic Category I.

6.3.2.2.6.17 Emergency Letdown Line Isolation Valve

One normally closed motor-operated gate valve and one normally closed motor-operated globe valve in series are aligned in each of two emergency letdown lines. These valves are remotely opened by operator action form the MCR and RSC during a safe shutdown for a feed and bleed emergency letdown/boration with the SI pump operation. The open or closed valve position, for these valves, is indicated in the MCR and RSC. The 1st and 2nd emergency letdown line isolation valves (SIS-MOV-031B, D and SIS-MOV-032B, D) are Equipment Class 1, Seismic Category I.

The emergency letdown feature of the SIS directs the reactor coolant to the spargers in the RWSP. As discussed above, the SI pumps return more highly borated RWSP water (approximately 4,000 ppm boron) to the reactor vessel.

6.3.2.2.6.18 Safety Injection Pump Discharge Containment Isolation Check Valve

One swing check valve is aligned in each safety injection pump discharge line as a containment isolation valve. The safety injection pump discharge containment isolation check valves (SIS-VLV-010A, B, C and D) are Equipment Class 2, Seismic Class Category I.

6.3.2.2.6.19 Accumulator Nitrogen Supply Containment Isolation Check Valve

One swing check valve is aligned in the accumulator nitrogen supply line as a containment isolation valve. The accumulator nitrogen supply containment isolation check valve (SIS-VLV-115) is Equipment Class 2, Seismic Class Category I.

6.3.2.2.6.20 Accumulator Nitrogen Supply Containment Isolation Valve

One locked closed manual globe valve is aligned in the accumulator nitrogen supply line as a containment isolation valve. The accumulator nitrogen supply containment isolation valve (SIS-VLV-114) is Equipment Class 2, Seismic Class Category I.

6.3.2.2.6.21 Direct Vessel Injection Line Check Valve

Two swing check valves in series are aligned in each direct vessel injection line. The 1st and 2nd direct vessel injection line check valves (SIS-VLV-012A, B, C, and D) and (SIS-VLV-013A, B, C, D) are Equipment Class 1, Seismic Class Category I.

6.3.2.2.6.22 Hot Leg Injection Check Valve

One swing check valve is aligned in each hot leg injection line. The hot leg injection check valves (SIS-VLV-015A, B, C and D) are Equipment Class 1, Seismic Class Category I.

6.3.2.3 Applicable Codes and Classifications

Design codes and classifications applicable to the SIS are described in Chapter 3, Sections 3.2. ECCS are Seismic Category I as required by 10CFR50, Appendix A, GDC 2.

The design and classification of instrumentation and controls applicable to the SIS are described in Chapter 7, “Instrumentation and Control Systems.”

6.3.2.4 Material Specifications and Compatibility

All surfaces of the SIS in contact with borated reactor coolant, or a mixture of borated reactor coolant and NaTB, are austenitic stainless steel. The nitrogen supply piping is carbon steel. The accumulator vessels are stainless clad carbon steel. The complete material specifications are presented in Section 6.1. System and component purchasing and procurement activities are performed within the guidelines provided by Chapter 17, “Quality Assurance.”

The COL Applicant is responsible to prepare an as-built list of material used in or on the ECCS by their commercial names, quantities (estimate where necessary), and chemical composition and show that the radiolytic or pyrolytic decomposition products, if any, of each material will not interfere with the safe operation of this or any other ESF.

6.3.2.5 System Reliability

Reliability of the SIS is considered in the design, procurement, and installation/layout of components. Chapter 17, Section 17.1 discusses Quality Assurance (QA) during design. QA during construction and operation is the responsibility of COL applicant. Four independent and passive accumulators are provided, as well as four 50% capacity SI pump trains. Complete redundancy is provided, including dedicated SI pumps supplying direct reactor vessel SI. The SI equipment trains are completely separated, both by the location of the major components, and by the sources and routings of the electrical and control power. The emergency power sources supply electrical power to the required equipment of the SIS so that the specified safety functions are maintained during a loss of offsite power (LOOP).

The ECCS is designed to be operated with a minimum number of active components being needed to accomplish SI. The SIS is in standby service during normal plant operation, which includes both power generation and hot standby modes. The SI pumps are in standby, ready for automatic initiation, with the pumps taking suction from the RWSP and injecting into the RCS through the DVI nozzles. The accumulators are in standby, aligned for passive actuation of injection to the RCS cold legs if the RCS pressure decreases below the accumulator pressure.

Each SI pump train discharge containment isolation valve is normally open. The system is designed with suitable capacity and redundancy for single failure considerations, as well as an unavailable train (e.g., maintenance). Chapter 15, subsection 15.0.0.4, discusses single active failure and potential passive failure and their application to event analysis. Table 6.3-6 presents a failure modes and effect analysis for the ECCS.

During long term cooling, the most limiting active failure, or a single passive failure, equal to the leakage that would occur from a valve or pump seal failure, may occur. Leakage is detected and alarmed in the MCR. The SIS consists of four separate 50% capacity trains. The ECCS performance objectives are achieved by isolation of the affected train.

As noted in Chapter 7, separate, independent, and redundant system initiating detectors and instrument racks are located in, around, and outside the containment structure. Instrument wiring is routed through widely separated and protected cable trays to initiate and control SI functions. Similarly, highly reliable separate, independent, and redundant power sources are available for instrumentation and prime movers (SI pump motors).

Chapter 14 discusses the construction and pre-operational testing, as well as system and integrated tests performed prior to commencement of full power. Further, component and system reliability is enhanced by inservice pump and valve testing required by Chapter 16, “Technical Specifications.”

Chapter 14 discusses the construction and pre-operational testing, as well as system and integrated tests performed prior to commencement of full power. Further, component and system reliability is enhanced by inservice pump and valve testing required by Chapter 16, "Technical Specifications."

The COL Applicant is responsible for developing an inservice pump and valve test program for system and components.

6.3.2.6 Protection Provisions

As noted above, many and varied provisions are provided to protect the ECCS. The details are provided in the following Chapters and sections:

- Internal flooding is discussed in Chapter 3, Section 3.4
- Missile protection is discussed in Chapter 3, Section 3.5
- Protection against dynamic effects is discussed in Chapter 3, Section 3.6
- Seismic analysis, design and qualification are discussed in Chapter 3, Sections 3.7 and 3.10
- Dynamic analysis and testing (e.g., vibration, thermal expansion) are discussed in Chapter 3, Section 3.9
- Environmental qualification is discussed in Chapter 3, Section 3.11

6.3.2.7 Provisions for Performance Testing and Inspection

The ECCS is designed with suitable provisions that facilitate component and system performance testing. Minimum flow and full-flow test piping allow for pump testing during power operation and shutdown modes. Local instruments, test, and sample connections also support performance testing and inspection.

6.3.2.8 Manual Actions

Under LOCA conditions no operator action is required, with the exception of hot leg injection switchover. Switchover from the refueling water storage tank , in the traditional PWR, to recirculation mode is not required and the ECCS actuation signal actuates the ECCS automatically, without need for operator action.

Under normal operations, charging the accumulators (through the SI pumps) and pressurizing the accumulators with nitrogen are manual operations. Prior to the reducing reactor pressure below 1,000 psig for shutdown, the normally-open gate valve in each accumulator's discharge line is closed by remote manual operation to prevent an unintended discharge into the RCS. These valves are re-opened during startup when the reactor pressure is increased above the SI reset (un-blocking) pressure.

Operators can align any SI pump's discharge flow between the reactor vessel downcomer (normal SI flow path) and the associated reactor hot leg. Such "hot leg

Operators manually initiate emergency letdown from the MCR. Reactor pressure is lowered by opening the safety depressurization valves, then the emergency letdown line isolation valves between the reactor hot leg B or D and the RWSP are opened. Borated water (at approximately 4,000 ppm boron) from the RWSP is returned to the reactor vessel through the SI pump flow, which is controlled by the associated direct vessel safety injection line isolation valve.

Procedures suitable to observed events and desired outcomes are developed, reviewed, and approved by the COL applicant.

6.3.3 Performance Evaluation

Chapter 15 presents a complete discussion and analysis of plant anticipated operational occurrences (AOOs), transients and postulated accidents (PAs), while Chapter 19 presents a probabilistic risk assessment of more severe and even less likely accidents. Chapter 15 and subsection 6.2.1 describe accident analysis results that include the effects of ECCS operation. The specific events described in Chapter 15 where the ECCS may be actuated are described in this subsection. Subsection 6.2.1 describes analyses that calculate maximum containment pressure and temperature from postulated accidents that release high-energy fluids into the containment.

The information in Chapter 15 and in subsection 6.2.1 indicates that the acceptance criteria are met for all events that rely on ECCS mitigation. Meeting these acceptance criteria demonstrates that the performance of the ECCS is adequate and therefore the ECCS design is acceptable.

Events during which the actuation of the ECCS may be necessary are categorized and identified in Items below:

A. Increase in Heat Removal by the Secondary System

Category A Events are non-LOCA events in which the primary protection is provided by regular monitoring of critical parameters, such as the SG level and the main steam flow from the MCR. These postulated transients could cause an automatic trip of the reactor through the Reactor Protection System. ECCS actuation would be caused by a low pressurizer pressure or a low main steam line pressure, and in the case of A.ii below, also by a high containment pressure.

i. Inadvertent opening of steam generator relief or safety valve

This event is an AOO. Chapter 15, subsection 15.1.4 provides a detailed description of the event and its results. Inadvertent opening of a steam generator relief, steam generator safety, or turbine bypass valve can cause a rapid increase in steam flow and a depressurization of the secondary system. The energy removed from the reactor coolant system by this event is sufficient to cause the RCS pressure to initiate the ECCS on low pressurizer pressure. However, the RCS pressure does not decrease below the accumulator charge pressure; therefore, the accumulators are not credited in the analysis. Only two pumps operate to inject borated water from the RWSP into the reactor vessel

downcomer. This scenario is consistent with the most severe single active failure. If such a failure occurs, the remaining trains provide the functions credited in this analysis.

In addition to the reactor trip, the following engineered safeguards feature functions are assumed to be available to mitigate the accident:

- Steam line isolation
- EFWS isolation
- Safety injection
- Reactor coolant pump trip
- Main feedwater isolation

The time required for borated water to reach the core is determined by taking into consideration: (1) the period from the time the ECCS actuation signal is generated to the time the safety injection pumps reach full speed, and (2) the transport time for the injected water to pass through the reactor coolant piping. These delays and purge volumes are directly modeled in the MARVEL-M code. The time sequence of the event is provided in Table 15.1.4-1.

The analysis shows that the departure from nucleate boiling ratio (DNBR) remains well above the 95/95 limit. Thus, the fuel cladding temperature would not increase significantly during this transient. For this event, the reactor coolant system pressure does not challenge the reactor coolant system design pressure. Similarly, the main steam system pressure does not challenge the design pressure for the main steam system.

Two radiological doses described in subsection 15.1.5 do not exceed the guideline value of 10 CFR 50.34 and 10% of guideline value of 10 CFR 50.34, respectively.

ii Steam system piping breaks inside and outside of containment system

This event is a postulated accident (PA). Chapter 15, subsection 15.1.5 provides a detailed description of the event and its results. This event encompasses a spectrum of steam system piping failure sizes and locations from both power operation and hot zero power initial conditions. If the break occurs inside the containment volume, containment pressure signals are available to actuate ECCS and containment heat removal systems. These signals and the containment systems are not used in the core response analysis presented in this section.

Reactor coolant system pressure decreases below the shutoff head of the Safety Injection System, resulting in the addition of borated water to the reactor coolant system. The RCS pressure does not decrease below the accumulator charge pressure; therefore, the accumulators are not credited in the analysis.

The limiting single failure for the event initiated from hot shutdown conditions is the failure of one ECCS train. Two of the remaining trains are assumed to operate to provide the safety injection functions credited in this analysis.

When the steam pressure in the faulted steam generator falls below the Low Main Steam Line Pressure setpoint (in any loop), the ECCS is actuated and the main steam isolation valves are closed. The ECCS signal also actuates EFWS and feedwater isolation to isolate the steam generators from each other.

In addition to the reactor trips listed above, the following engineered safeguards feature functions are assumed to be available to mitigate the accident:

- Steamline isolation
- EFWS isolation
- Safety injection
- Reactor coolant pump trip
- Main feedwater isolation

Only two safety injection trains are assumed to operate to inject borated water into the reactor vessel. The time required for borated water to reach the core is determined by taking into consideration: (1) the period from the time the ECCS actuation signal is generated to the time the safety injection pumps reach full speed and (2) the transport time for the injected water to pass through the reactor coolant piping. The time for the safety injection pumps to reach full speed includes time for the emergency gas turbine generators to start for the case where offsite power is not available. ECCS signal delays, backup power start delays, and safety injection piping and purge volumes are modeled by the MARVEL-M code. The time sequence of the event is provided in Table 15.1.5-1.

The analysis shows that the minimum DNBR remains above the 95/95 limit. Thus, the fuel cladding temperature would not increase significantly during this transient.

Two radiological doses are less than the guideline value of 10 CFR 50.34 and 10% of guideline value of 10 CFR 50.34, respectively.

B. Decrease in Reactor Coolant Inventory

Category B events are LOCAs. ECCS actuation would generally be initiated by low pressurizer pressure lor high containment pressure. However, it is possible that a small break LOCA with an extremely small break flow area would not result in automatic ECCS actuation.

i. LOCA resulting from a spectrum of postulated piping breaks within the RCPB

Chapter 15, subsection 15.6.5 provides a detailed description of the large and small break analysis and results.

LOCAs are accidents that would result from the loss of reactor coolant, at a rate in excess of the capability of the reactor coolant makeup system, from breaks in pipes in the reactor coolant pressure boundary up to and including a break equivalent in size to the double-ended rupture of the largest pipe in the reactor coolant system.

For this accident, the ECCS is actuated by the ECCS actuation signal due to high containment pressure. The accumulators discharge, followed by actuation of the safety injection pumps, and deliver borated water to the core. Following completion of core reflood (large break) or core recovery (small break), the ECCS continues to supply borated water to the RCS for long-term cooling. In the small break LOCA, the RCS pressure does not fall below the injection pressure for the accumulators, depending on the break size. In this case, the SIS system solely provides the core reflooding function.

In the event of a small break, a slow depressurization of the RCS would occur. The low RCS (pressurizer) pressure signal causes a reactor trip. A loss of offsite power following the reactor trip is assumed in the analysis. Turbine and the RCP would trip accordingly. The ECCS actuation signal causes the high head injection system to inject borated water to the core. With the ECCS injection, only the upper part of the core is uncovered. But then the core is recovered in a short period for the small break LOCA..

In the event of a large-break LOCA, a rapid depressurization of the RCS occurs. The accumulators and the SI pumps inject borated water. The accumulators supply a large injection flow rate initially to refill the reactor vessel downcomer. The accumulator injection flow rate is then automatically switched to the small injection flow rate mode, once the accumulator water level decreases below a specified value. The SI pumps directly inject borated water from the RWSP to the reactor vessel downcomer through the DVI nozzles. The injection flow rate of the SI pumps increases as the RCS pressure falls, approaching containment atmosphere.

The calculated results for the event are presented in Table 15.6.5-8 (Large Break) and Table 15.6.5-10, 12, 14 (Small Break). The time sequence of the event is provided in Table 15.6.5-6 (Large Break) and Table 15.6.5-9, 11, 13 (Small Break).

The results of the LOCA analyses demonstrate that the acceptance criteria of 10 CFR 50.46 are satisfied. The peak containment pressure has been shown to be below the containment design pressure. The exclusion area boundary and low population doses have been shown to meet the 10 CFR 50.34 dose guideline. The dose for the main control room personnel has been shown to meet the dose criteria given in GDC 19.

ii. Radiological consequences of a steam generator tube failure

This event is a PA. Chapter 15, subsection 15.6.3 provides a detailed description of the steam generator tube failure analysis and results. In the steam generator tube failure event, the complete severance of a single steam generator tube is assumed. The event is assumed to take place at full power with the reactor coolant contaminated with fission products, corresponding to continuous operation with a limited number of defective fuel rods. The event leads to leakage of radioactive coolant from the RCS to the secondary system.

If the pressurizer pressure decreases below the pressurizer pressure low setpoint, ECCS is actuated. The ECCS signal starts the safety injection pumps and also trips the reactor coolant pumps, which coast down to natural circulation conditions. In addition, an ECCS actuation signal provides feedwater isolation by automatically tripping the main feedwater pumps and fully closing all control valves and feedwater isolation valves in the

feedwater system. The core makeup from the borated safety injection flow (from the refueling water storage pit) provides the heat sink to remove decay heat from the reactor.

The makeup water from the safety injection flow increases the RCS water inventory, and stabilizes the RCS pressure and pressurizer water level. After the safety injection is terminated, the break flow eventually stops when the RCS pressure equalizes with the ruptured steam generator pressure. At this point, the plant is stabilized. RHR is initiated to provide long term cooling after RCS temperature is sufficiently reduced via heat removal by the intact SGs.

The following engineered safeguards features are assumed to be available to mitigate the accident:

- EFWS
- EFWS isolation
- Safety Injection

ECCS must be terminated to stop primary-to-secondary leakage. The ECCS is terminated manually according to the SI termination criteria specified in the Emergency Operating Instructions. After the ECCS is terminated, leakage flow will continue until the RCS and steam generator pressures equalize. SI is assumed to be provided by all four SI pumps at the maximum flow rate. The time sequence of the event is provided in Table 15.6.3-2.

Two radiological doses are less than the guideline value of 10 CFR 50.34 and 10% of guideline value of 10 CFR 50.34, respectively.

Iii. Spectrum of rod cluster control assembly (RCCA) ejection accidents

This event is a PA. A RCCA ejection accident also causes a small break LOCA. Chapter 15, subsection 15.4.8 provides a detailed description of the rod cluster control assembly ejection analysis and results.

This accident is defined as the mechanical failure of a control rod drive mechanism pressure housing, which results in the ejection of an RCCA and its drive shaft. The consequence of this RCCA ejection is a rapid positive reactivity insertion with an increase of core power peaking, possibly leading to localized fuel rod failure. The event is analyzed under a spectrum of power levels. The time sequence of the event is provided in Table 15.4.8-1.

The reactor coolant system pressure remains well below 110% of the system design pressure, so the integrity of the reactor coolant pressure boundary is maintained. By meeting this criterion, the peak reactor coolant pressure also remains less than the “Service Limit C” stipulated by the ASME code. Rradiological consequence is less than 25% of the dose guideline of 25 rem TEDE stipulated by 10 CFR 50.34.

6.3.3.1 Operational Restrictions

Chapter 16, "Technical Specifications," provides system and component operating restrictions in the form of limiting conditions for operation (LCOs). Each LCO specifies the minimum capacities, concentrations, components, or trains and relies on redundancy to account for the component and subsystem unavailability (e.g., maintenance). The required test frequency and acceptance criteria to demonstrate operability are provided.

6.3.3.2 ECCS Performance Criteria

Chapter 16, "Technical Specifications," specifies the ECCS performance criteria. Technical Specification Acceptance Criteria ensure that the relevant system data (e.g., tank levels, boron concentration, flow rate, pressure) are collected, reviewed, and approved. The Technical Specification Bases section provides supporting information and rationale for each specification. Chapter 15 presents relevant ECCS performance criteria.

6.3.3.3 Single Failure Considerations

The ECCS is designed with redundancy so that the specified safety functions are performed assuming a single failure of an active component for a short-term following an accident, and assuming either a single failure of an active component or a single failure of a passive component for a long-term following an accident. The ECCS consists of four trains. The accumulator capacity is sized such that one of four accumulators is expected to flow out of the break, with no contribution to the core re-flood. Two of four SI pump trains are required to mitigate the consequences of a large-break LOCA. One train is expected to be out of service for maintenance and one train is expected to fail upon initiation of the safety injection signal. The ECCS performance, with assumed single failures, is evaluated based on the failure modes and effects analysis presented in Table 6.3-6.

6.3.3.4 ECCS Flow Performance

A process flow diagram for the ECCS is presented in Figures 6.3-13 and 6.3-14. Safety injection pump flow performance requirements are provided in Figure 6.3-4. High head safety injection flow characteristics for minimum and maximum safeguards are provided for the system in Figures 6.3-15 and 6.3-16. These curves are reproduced in Figure 15.6.5-17, 26 and 35 for the small-break LOCA and in Figure 15.6.5-7 for the large-break LOCA reference case.

The time sequences for ECCS operation, including its subsystems are presented in Chapter 15 and subsection 6.2.1. The pH of the RWSP increases when the NaTB baskets are wetted by the containment spray following a LOCA. Subsection 6.5.2 contains a description of pH adjustment in the RWSP. Subsection 6.2.1 also shows the initiation of the CSS. Boron precipitation in the reactor vessel is prevented by manually realigning the SIS to shift the RCS injection from the DVI line to the hot leg injection line at approximately 4 hours after a LOCA event.

6.3.3.5 Use of Dual-Function Components for ECCS

As discussed in subsection 6.3.2.1.1 above, the ECC/CS strainers are shared with the CSS. The suction pipes inside the sump pit distribute water from the RWSP to each of the following:

- SIS
- CSS
- RHRS

The SI minimum flow and full-flow test line returns to the RWSP. The minimum flow and full-flow test line is shared with the test line piping and the CS/RHR full-flow test line piping prior to discharging into the RWSP.

The hot leg injection line is shared with the suction line to the CS/RHR pumps and emergency letdown lines.

The cold leg injection line from the accumulators is shared with the return line from the RHRS.

6.3.3.6 Limits on Emergency Core Cooling Systems Parameters

Chapter 16, “Technical Specifications,” provides operating restrictions in the form of LCO. Each LCO accounts for a component or subsystem unavailability (e.g., maintenance or testing), and includes the term “operable” to account for related items such as electrical power sources, ventilation, valve lineups, and instrumentation. Acceptance criteria verify that the system data (e.g., tank levels, boron concentration, flow rate, pressure) is collected, reviewed, and approved. The Bases section of the Technical Specifications provide supporting information and rationale for the LCOs.

6.3.4 Tests and Inspections

ECCS testing demonstrates that the system performs satisfactorily in all expected operating configurations. Testing includes logic, setpoints, and flow rate. Concurrent testing of the ECCS is performed to ensure that the minimum number of operable components are available.

The SI pumps are tested with the pump minimum flow or full flow piping loops during normal reactor power operation.

Leak testing of each RCPB check valve in the SI lines is performed using the system leak test lines.

6.3.4.1 ECCS Performance Tests

Chapter 14, “Initial Test Program,” is organized and conducted to develop confidence that the plant operates as designed. The initial test program verifies the design and operating features, and gathers important baseline data on the nuclear steam supply

system, as well as the balance-of-plant. The baseline data is used to establish the acceptability basis for surveillance and testing during the operational life of the plant. The three phases of the initial test program are as follows:

- Pre-operational tests
- Initial fuel loading and criticality
- low power and power ascension testing

The pre-operational test program tests each train of the ECCS under both ambient and simulated hot operating conditions. Testing of the SI pumps using the full flow test line demonstrates the capability of the pump to deliver the design flow.

Pre-operational tests first provide assurance that individual components are properly installed and connected, and then demonstrate that system design specifications are satisfied. Pre-operational testing demonstrates that limited interface requirements for support systems are satisfied. Formal review and approval of pre-operational test results (the "pre-operational plateau") are performed prior to the initial fuel loading and criticality. The pre-operational test program for the ECCS is described in Chapter 14, subsection 14.2.12.1.

Fuel loading and initial criticality testing verify the operation of nuclear instruments and fuel handling equipment, verifies the basic core physics, and produces important baseline (clean, cold) core data.

Low power and power ascension testing verifies integrated core physics plant operation that is limited to specified power plateaus. The results of all tests associated with each power plateau are reviewed and approved prior to moving to the next, higher power plateau. A full test of ESFs is performed from cold conditions and a reduced flow test is performed from hot conditions prior to fuel load, in accordance with the guidance provided by RG 1.79 (Ref. 6.3-5). The testing under maximum startup loading conditions is performed to verify the adequacy of the electric power supply. Maximum startup loading conditions testing is described in Chapter 14, subsection 14.2.12.1.

The COL Applicant provides the bases for ECCS surveillance requirements for ECCS performance such as motor operated valve and pump performance testing.

The COL Applicant prepares a suitable initial test program consistent with DCD Chapter 14 in accordance with RG 1.68 (Ref. 6.3-7) to ensure operational readiness.

6.3.4.2 Reliability Tests and Inspections

Because the ECCS is a standby system and not normally operating, periodic inservice pump, valve, and logic tests are performed. Chapter 16, "Technical Specifications," requires that an IST pump and valve program be developed and implemented in accordance with the requirements of 10CFR50.55a(f) (Ref. 6.3-6).

All ECCS valves are tested to demonstrate satisfactory performance in all expected operating modes, including injection at the required flow rate and pressure. Testing of

the ECCS is performed during the initial startup testing in accordance with the guidance in RG 1.68 (Ref. 6.3-7), Appendix A.

The SI pumps are able to be periodically tested with the pump minimum or full flow piping loops during normal operation.

Leak testing of each RCPB check valve in the SI lines is performed using the system leak test lines.

Initiation logic and the interlock logic system functional testing to ensure proper system initiation are described in detail in Chapter 7, Section 7.3.

Testing intervals of ECCS components are found in Chapter 3, subsection 3.9.6.

Preservice and inservice examinations, tests, and inspections, including layout and constructing the ECCS with free access to component, are performed in accordance with ASME Code Section XI as required in Section 6.6.

6.3.5 Instrumentation Requirements

The ECCS instrumentation and control requirements, including design details, setpoint determinations, automatic initiation, actuation logic, and interlocks, are discussed in Section 7.3, “Engineered Safety Feature Systems.” MCR instrumentation and alarms for the purposes of monitoring and manual control are also discussed.

6.3.5.1 Safety Injection Signal

The actuation signal that starts the SI pumps and repositions the SIS accumulator valves if closed, is referred to as the safety injection signal. The signals that are generated by the instrumentation and control (I&C) protection logic described in Chapter 7 and used to initiate the safety injection signal are the following:

- Low pressurizer pressure
- Low main steam line pressure
- High containment pressure
- Manual ECCS actuation from the MCR

The S signal due to the low pressurizer pressure signal or low main steam line pressure signal can be bypassed by operator action when the RCS pressure decreases below the P-11 setpoint. The bypass is available during plant cooldown and cold shutdown and is automatically reset when the RCS pressure increases above the P-11 setpoint.

The S signal also provides an automatic load sequencing of the emergency power sources to accommodate the LOOP event. Each ESF system train monitors the loss of power condition for its respective train. The safety injection signal is blocked until the receipt of the reactor trip signal. Details of the ESF system are provided in Chapter 7, Section 7.3.

6.3.5.2 Accumulators

Two pressure channels are installed on each of the four accumulators. Each channel provides main control room pressure indication, and high- and low-pressure alarms. The pressure indication is used for setting the initial nitrogen charge pressure and for monitoring during normal operations.

Two level channels are installed on each of the four accumulators. Each channel provides MCR and RSC level indication, and high- and low-level alarms. The alarms indicate an abnormal operating water level in the accumulator that is outside or approaching the bounds of the plant Technical Specifications.

One pressure controller with a local pressure indicator is installed in the accumulator nitrogen supply line to regulate the accumulator nitrogen supply pressure control valve.

6.3.5.3 Safety Injection Pumps

Suction and discharge pressure for each SI pump is displayed in the MCR and RSC. The operators use pump suction and discharge pressure indication to verify that a suitable flow path is available and for periodic inservice testing.

One differential pressure transmitter is installed in each of the four SI pump discharge lines, with a flow rate indication in the MCR and RSC. It is also used for tests required to assess the performance of the SI pumps.

One differential pressure transmitter is installed in each of the four SI pump minimum flow lines, with a flow rate indication in the MCR and RSC.

The differential flow rate between the SI pump discharge flow rate and the SI pump minimum flow rate is indicated in the MCR and RSC as SI flow rate into the RCS for the purpose of monitoring the SI flow during loss-of-coolant events. The operators can confirm the SI flow.

6.3.5.4 Refueling Water Storage Pit

Two wide range and two narrow range level channels are installed on the RWSP. Each channel provides level indication in the MCR and RSC, while two wide range level channels also provide high, below normal, and low level alarms.

6.3.6 Combined License Information

Any utility that references the US-APWR design for construction and Licensed operation is responsible for the following COL items:

COL 6.3(1) The COL Applicant provides the bases for ECCS surveillance requirements for ECCS performance such as motor operated valve and pump capability testing.

COL 6.3(2) The COL Applicant prepares a suitable initial test program consistent with DCD Chapter 14 in accordance with RG 1.68 to ensure Operational readiness.

COL 6.3(3) The COL Applicant prepares normal, abnormal and emergency operating procedures for the ECCS, to include Safety Injection Pumps, Accumulators, and Emergency Letdown, including emergency operating instruction for feed-and-bleed operation.

COL 6.3(4) The COL Applicant is responsible for developing a program to maintain RWSP water chemistry including surveillance test procedures.

COL 6.3(5) The COL Applicant is responsible for developing an inservice pump and valve test program for system and components.

COL 6.3(6) The COL Applicant is responsible to prepare an as-built list of material used in or on the ECCS by their commercial names, quantities (estimate where necessary), and chemical composition and show that the radiolytic or pyrolytic decomposition products, if any, of each material will not interfere with the safe operation of this or any other ESF.

6.3.7 References

6.3-1 U.S Nuclear Regulatory Commission Safety Evaluation Report for the RESAR SP/90, NUREG-1413, April 1991.

6.3-2 Acceptance criteria for ECCSs for light-water nuclear power reactors, Title 10, Code of Federal Regulations, 10 CFR 50.46, January 2007.

6.3-3 The Advanced Accumulator, MUAP-07001-P, Rev. 1 and MUAP-07001-NP, Rev. 1, February 2007.

6.3-4 "Large Break LOCA Code Applicability Report for US-APWR", MUAP-7011-P, Rev. 0 and MUAP-7011-NP, Rev. 0, LTD, July 2007.

6.3-5 Nuclear Regulator Commission, Preoperational Testing of Emergency Core Cooling Systems for Pressurized Water Reactors, Regulatory Guide 1.79, September 1975.

6.3-6 Inservice Testing Requirements, Title 10, Code of Federal Regulations, 10CFR 50.55a(f), January 2007.

6.3-7 Nuclear Regulator Commission, Initial Test Programs for Water-Cooled Nuclear Power Plants, Regulatory Guide 1.68, March 2007.

Table 6.3-1 Response of US-APWR to TMI Action Plan (Sheet 1 of 2)

No.	Regulatory Position	US-APWR Design
II.K.3.15	Modify break detection logic to prevent spurious isolation of high pressure core injection and reactor core isolation cooling systems (Applicable to BWR's only)	
II.K.3.18	Perform a feasibility and risk assessment study to determine the optimum automatic depressurization system (ADS) design modifications that would eliminate the need for manual activation to ensure adequate core cooling. (Applicable to BWR's only)	N/A
II.K.3.21	Perform a study of the effect on all core-cooling modes under accident conditions of designing the core spray and low pressure coolant injection systems to ensure that the systems will automatically restart on loss of water level, after having been manually stopped, if an initiation signal is still present. (Applicable to BWR's only).	N/A
II.K.3.28	Perform a study to ensure that the Automatic Depressurization System, valves, accumulators, and associated equipment and instrumentation will be capable of performing their intended functions during and following an accident situation, taking no credit for non-safety related equipment or instrumentation, and accounting for normal expected air (or nitrogen) leakage through valves. (Applicable to BWR's only).	N/A
II.K.3.45	Provide an evaluation of depressurization methods, other than by full actuation of the automatic depressurization system, that would reduce	N/A

Table 6.3-1 Response of US-APWR to TMI Action Plan (Sheet 2 of 2)

No.	Regulatory Position	US-APWR Design
III.D.1.1	**LEAKAGE CONTROL OUTSIDE CONTAINMENT** Leakage detection and leakage control program outside of containment following an accident shall be discussed.	A pit (sump) with a leak detector installed in each pump compartment and alarms to MCR to prevent significant leakage of radioactive recirculation water from the high head injection system to the reactor building. The high head injection system is designed to have sufficient redundancy and independence to prevent loss of core cooling function during an accident assuming the isolation of the leaked train after leakage is detected.

Table 6.3-2 Response of US-APWR to Unresolved Safety Issues (Sheet 1 of 2)

No.	Regulatory Position	US-APWR Design
A-1	**WATER HAMMER** A number of water hammers have been experienced in several systems (e.g., SG feed water ring/piping, ECCS, RHRS, Containment Spray System, Sea Water System, Main Feed Water System, Main Steam System) but most of them were relatively small damage of piping support. Although they did not result in radioactive release to outside of plant, establishing a systematic review procedure is necessary addressing continuous occurrence of the event and potential to plant safety.	The probability of water hammer in ECCS is discussed in subsection 6.3.2.1.1.
A-2	**ASYMMETIC BLOWDOWN LOADS ON REACTOR PRIMARY COOLANT SYSTEMS** In 1975, NRC received a report from Westinghouse describing that asymmetric blowdown loads due to hypothetical breaks in specified points are not considered in the design of reactor vessel support structures. According to the analyses, these asymmetric blowdown loads were significant to reactor vessel support structures and affected their integrity.	Because the protection design in the US-APWR uses the LBB concept, the assumption of asymmetric blowdown loads based on the hypothetical break is not necessary.
A-24	**QUALIFICATION OF CLASS 1E SAFETY-RELATED EQUIPMENT** Environmental qualifications of safety-related equipments are based on the IEEE-323, but interpretation of this standard varies and some of the interpretations are not acceptable to the NRC requirements.	Environmental qualification is applicable to the Class 1E safety-related equipment of US-APWR according to 10CFR50.49.

Table 6.3-2 Response of Us-APWR to Unresolved Safety Issues (Sheet 2 of 2)

No.	Regulatory Position	US-APWR Design
A-40	**SEISMIC DESIGN CRITERIA** Seismic design requirements and methodology have evolved. But early plants were designed without specific seismic requirements. These plants need to be reviewed based on the latest knowledge.	US-APWR is designed based on the latest seismic design criteria. (Refer to DCD Chapter 3, Section 3.7).
A-43	**CONTAINMENT EMERGENCY SUMP PERFORMANCE** After a LOCA, ECCS degradation is a concern due to air or material intrusion in the recirculation sump screen. The following specific items are: (1) Pump failure due to vortex, or air intrusion. (2) Screen clogging due to foreign materials such as collapsed insulation attributable to a LOCA and loss of pump NPSH from a clogged screen. (3) Operability problems with RHR/CSS pump due to air and foreign materials, and, effect of foreign particles to seals and bearings.	This issue is discussed in subsection 6.2.2.2.5.
B-61	**ALLOWABLE ECCS EQUIPMENT OUTAGE PERIODS** The current outage/maintenance periods for ECCS equipment are determined using engineering judgment. Unavailability of ECCS equipment is between 0.3 and 0.8 need to be optimized. In the United States, On-Line Maintenance is frequently performed and discussed using the PSA method in light of safety.	In the US-APWR, ECCS consists of four independent trains of mechanical components and electrical equipments. The US-APWR allows On-Line Maintenance without conflicting the limiting condition for operation (LCO).

Table 6.3-3 Response of US-APWR to Generic Safety Issues (Sheet 1 of 3)

No.	Regulatory Position	US-APWR Design
23	**REACTOR COOLANT PUMP SEAL FAILURE** The results reported in WASH-1400 indicated that breaks in the reactor coolant pressure boundary in the range of 0.5 to 2 inches may contribute to core-melt. In this range of break size, the RCP seal is assumed to have the highest failure rate. Therefore, it is important to ensure the RCP seal integrity. However, the RCP seal integrity relates to item A-44, Station Blackout (SBO), or item GI-65, CCW Failure, and needs to be addressed. An easy measure for assuring the RCP seal integrity is to change the seals every year, but results in increased radiation exposure.	RCP seals are designed such that the pressure tightness (or leak tightness) is usually maintained by No.1 seal, and in case of a failure of No.1 seal, No.2 seal can withstand full pressure as the defense-in-depth function. The RCP seal integrity is discussed in Chapter 8, Subsection 8.4.2.1.2 and Chapter 9, Subsection 9.2.2.
I 24	**AUTOMATIC ECCS SWITCHOVER TO RECIRCULATION** There are 3 methods to switchover from injection mode to recirculation mode (i.e., manual, semi-automatic, and automatic), but these methods may be affected by human-error, component failure, and common-cause failure, respectively.	In the US-APWR, the RWSP is placed in the containment and the switchover of ECCS water source following an accident is not necessary.

Table 6.3-3 Response of US-APWR to Generic Safety Issues (Sheet 2 of 3)

No.	Regulatory Position	US-APWR Design
105	**INTERFACING SYSTEM LOCA AT LWRS** The low pressure systems are connected to RCPB using check valves. The leak of check valves could result in the failure of low pressure system. In BWR plants, leak testing for pressure isolation valve in the low pressure system which connects to the RCS is specified to be performed every 18 months in the Tech. Spec. However, 30 failures of RCPB function have occurred in 200 BWR years of operating experience. Among 30 failures, 20 cases are inadvertent remained-open check valves after maintenance by human-error, and 10 cases are stuck-open check valves.	In the US-APWR, the discharge of boric acid water from the accumulators, below the standpipe, replaces the low head safety injection function in typical US PWR plants. As such, there are no “low head” systems associated with ECCS.
122.2	**INITIATING FEED AND BLEED** This issue addresses the emergency operating procedure and operator training to assess the necessity of initiation of cooling operation using feed-and-bleed based on the experienced loss-of-steam generator cooling incident at Davis Besse described in NUREG-1154.	Emergency operating instruction for feed-and-bleed operation is submitted by COL applicant.

Table 6.3-3 Response of US-APWR to Generic Safety Issues (Sheet 3 of 3)

No.	Regulatory Position	US-APWR Design
185	**CONTROL OF RECRITICALITY FOLLOWING SMALL BREAK LOCA IN PWRS** In PWR plants, if RCPs and natural circulation stopped during small break LOCA, steam generated at the core could be condensed in the SG and be accumulated in the outlet plenum and crossover piping. When the natural circulation or RCP is restarted, the low concentration boric acid coolant could flow into the core and result in recriticality.	This issue was considered not to be a generic safety issue by the NRC, and closed.
191	**ASSESSMENT OF DEBRIS ACCUMULATION ON PWR SUMP PERFORMANCE(Rev.1)** Another phenomenon and failure mode that are not considered in USI, A-43, were revealed in a study concerning ECCS sump strainer blockage in BWR plants. In addition, debris such as degradation or failure of paint in the containment and associated sump blockage in PWR plants was revealed by plant operating experience. NRC recognized this matter and required the extended study to address these latest safety issues.	This issue is discussed in subsection 6.2.2.2.5.

Table 6.3-4 Response of US-APWR to Generic Letters and Bulletins (Sheet 1 of 12)

No.	Regulatory Position	US-APWR Design
GL 80-014	**LWR PRIMARY COOLANT SYSTEM PRESSURE ISOLATION VALVES** The failure of two in-series isolation valves (two check valves , or two check valves + MOV) isolating the high pressure RCS from the low pressure systems such as RHRS could result in core melt accident (EVENT V). Acceptable methods to ensure the integrity of these valves include continuous pressure monitoring on the low pressure side of each check valve or periodic IST leakage testing on each valve every time the plant is shutdown and each time a check valve is moved from the fully closed position. At this time, NRC does not have information about measures taken by each plant. These periodic valve tests or continuous surveillance should be accomplished as soon as possible. If tests or surveillance provisions necessitate a plant outage, every effort should be made to accomplish such tests/provisions prior to plant startup after the next scheduled outage.	In the US-APWR, the accumulator with flow damper has the low head injection function, thereby the low head injection system is installed as ECCS.
GL 80-035	**EFFECT OF A DC POWER SUPPLY FAILURE ON ECCS PERFORMANCE** NRC required BWR licensees to report on the effects and acceptability dc power supply failures have on the ECCS in BWR plants.	Motor operated valves (MOVs) are provided redundant power sources to prevent the loss of function. (Refer to Table 6.3-6, Failure Mode and Effect Analyses.)

Table 6.3-4 Response of US-APWR to Generic Letters and Bulletins (Sheet 2 of 12)

No.	Regulatory Position	US-APWR Design
GL 81-021	**NATURAL CIRCULATION COOLDOWN** On June 11, 1980, the St. Lucie Plant, Unit No. 1, was forced to cool down on natural circulation as a result of a CCW malfunction. NRC has identified problems such as the difficulty of controlling RCS inventory due to vessel voiding and failure of the operator to have prior knowledge for this event. Based on the analyses of this event, the NRC requested all PWR utilities to review promptly their plant operation in light of the St. Lucie, Unit No. 1 event, and, as necessary, to adopt procedures and training which will enable operators to avoid (if possible), recognize and properly react to this event. The NRC also requested that an assessment of their facility procedures and training program with respect to the matters described above within 6 months.	Safety-related RV Head Vent System is designed with redundancy to remove void (if generated) from RV head. In addition, a natural circulation test is performed during startup and the capability of natural circulation operation confirmed. (Refer to DCD Chapter 14)

Table 6.3-4 Response of US-APWR to Generic Letters and Bulletins (Sheet 3 of 12)

No.	Regulatory Position	US-APWR Design
GL 85-16	**HIGH BORON CONCENTRATIONS** On December 28, 1984, the SIS was inoperable in Indian Point 2 because all SI pumps were frozen with crystallized boric acid. The analytical methods for calculating the consequences of a SLB have improved and these revised calculations demonstrate that the negative reactivity that needs to be added is lower than originally thought and consequently the need for highly concentrated boron injection is reduced or eliminated. In response to this, many licensees including Surry 1&2 have requested that they be allowed to either physically remove the boron injection tank from the safety injection piping, or at least reduce boron concentrations in the tank to the levels safely used in other sections of the safety injection piping and refueling water storage tank . Licensees have submitted new analyses of the steam line break event that demonstrated the regulatory criteria (i.e., 10 CFR 100 guidelines dose values) were met. The staff has reviewed these analyses and granted these requests. In light of the safety risks inherent in the system and these new calculations which show a reduced need for boron injection, the NRC staff encouraged the other licensees to reevaluate the need for maintaining high concentrations of boron in their BITs and possibility to remove the boron injection tanks or reduce the boron concentration.	Boron injection tank is not installed in the US-APWR; Only the borated water stored in the Refueling Water Storage Pit (approximately 4,000 ppm B) is injected for boration in an accident. Performance evaluation in the steam line break event is provided in DCD Chapter 15, subsection 15.1.5.

Table 6.3-4 Response of US-APWR to Generic Letters and Bulletins (Sheet 4 of 12)

No.	Regulatory Position	US-APWR Design
GL 86-07	**TRANSMITTAL OF NUREG-1190 REGARDING THE SAN ONOFRE UNIT 1 LOSS OF POWER AND WATER HAMMER EVENT** On November 21, 1985, San Onofre Unit 1 Nuclear Power Plant experienced a loss of ac electrical power and failure of multiple check valves followed by a severe water hammer in the secondary system which caused a steam leak and damaged plant equipment (e.g., main feedwater pump trip, main feedwater pump suction pipe break). The NRC investigated and documented the factual information and their findings and conclusions associated with the event in NUREG-1190, "Loss of Power and Water Hammer Event at San Onofre Unit 1, on, November 21, 1985." The NRC requested all reactor licensees and applicants to review the information in NUREG-1190. The NRC requested the utility to reply relating to the validity of check valves and report the status of implementation of provision for USI A-1, “Water Hammer.”	The probability of water hammer in ECCS is discussed in subsection 6.3.2.1.1.

Table 6.3-4 Response of US-APWR to Generic Letters and Bulletins (Sheet 5 of 12)

No.	Regulatory Position	US-APWR Design
GL 89-10	**SAFETY-RELATED MOTOR-OPERATED VALVE TESTING AND SURVEILLANCE** NRC requires the following actions to ensure that valve motor-operator switch settings (torque, torque bypass, position limit, overload) for motor-operated valves (MOVs) in several specified systems are selected, set, and maintained so that the MOVs will operate under design-basis conditions for the life of the plant: a. Review and document the design basis for the operation of each MOV. b. Using the results from item a., establish the correct switch settings, a program to review and revise. c. Individual MOV switch settings should be changed, as appropriate, to those established in response to item b. The MOV should be demonstrated to be operable by testing. d. Prepare or revise procedures to ensure that correct switch settings are determined and maintained throughout the life of plant. e. Each MOV failure and corrective action taken, including repair, alteration, analysis, test, and surveillance, should be analyzed or justified and documented.	The Testing and Surveillance of MOVs is discussed in DCD Chapter 3, subsection 3.9.6. Environmental Qualification is discussed in DCD Chapter 3, Section 3.11.

Table 6.3-4 Response of US-APWR to Generic Letters and Bulletins (Sheet 6 of 12)

No.	Regulatory Position	US-APWR Design
GL 91-07	**GI-23, "REACTOR COOLANT PUMP SEAL FAILURES" AND ITS POSSIBLE EFFECT ON STATION BLACKOUT** The station black out (SBO) rule became effective on July 21, 1988, and the NRC received responses from all licensees addressing the SBO rule by April 21, 1989. Licensees may have analyzed their reactor coolant inventories for the SBO conditions using the specific guidance provided in NUMARC Report 87-00 of 25 gpm for RCP seal leakage for pressurized water reactors (PWRs) and 18 gpm for boiling water reactors (BWRs). These leak rates could be greater if the seals failed during the SBO event. The preliminary results of the staff's studies for GI-23 indicate that the pump seal leak rates could be substantially higher than those assumed for the resolution of the SBO issue. The staff determined that RCP seal leakage could exceed 25 gpm and lead to core uncovery during an SBO in any of the PWRs and in any of the four BWRs that do not have an ac-independent makeup capability. Having made these findings, the staff is soliciting public comments on its current understanding of GSI-23. One possible outcome may be that seal cooling be provided by an independent cooling system during off-normal plant conditions involving the loss of all seal cooling, such as could occur during an SBO. This generic letter consists of information only and does not require specific action or written response. However, utilities should recognize that such a recommendation could affect their analyses and actions addressing conformance to the SBO rule.	The RCP Seal Integrity during SBO is discussed in DCD Chapter 8, subsection 8.4.2.1.2.

Table 6.3-4 Response of US-APWR to Generic Letters and Bulletins (Sheet 7 of 12)

No.	Regulatory Position	US-APWR Design
GL 98-04	**POTENTIAL FOR DEGRADATION OF THE EMERGENCY CORE COOLING SYSTEM AND THE CONTAINMENT SPRAY SYSTEM AFTER A LOSS-OF-COOLANT ACCIDENT BECAUSE OF CONSTRUCTION AND PROTECTIVE COATING DEFICIENCIES AND FOREIGN MATERIAL IN CONTAINMENT** NRC alerts licensees that foreign material continues to be found inside operating nuclear power plant containments. During a design basis LOCA, this foreign material could block an ECCS or safety-related CSS flow path or damage ECCS or safety-related CSS equipment. The NRC is also issuing this GL to alert the licensees to the problems associated with the material condition of Service Level 1 protective coatings inside the containment and to request information under 10 CFR 50.54(f) to evaluate the licensees' programs for ensuring that Service Level 1 protective coatings inside containment do not detach from their substrate during a design basis LOCA and interfere with the operation of the ECCS and the safety related CSS. As a result of NRC findings in these areas and due to the importance of ensuring system functionality, within 120 days of the date of this GL, licensees are required to submit a written response ensuring that Service Level 1 protective coatings inside containment do not detach from their substrate during a design basis LOCA.	This issue is discussed in subsection 6.2.2.2.5.

Table 6.3-4 Response of US-APWR to Generic Letters and Bulletins (Sheet 8 of 12)

No.	Regulatory Position	US-APWR Design
BL 80-01	**OPERABILITY OF ADS VALVE PNEUMATIC SUPPLY** With respect to the reliability problem of ADS pneumatic supply (either nitrogen or air) system identified in Peach Bottom 2 and 3, the NRC requested each BWR utility to determine and report if hard-seat check valves have been installed to isolate accumulator systems, if periodic leak tests have been performed, and the seismic qualifications of the ADS pneumatic supply system.	N/A ADS is not installed in the US-APWR design.
BL 80-18	**MAINTENANCE OF ADEQUATE MINIMUM FLOW THROUGH CENTRIFUGAL CHARGING PUMPS FOLLOWING SECONDARY SIDE HIGH ENERGY LINE RUPTURE** Under certain conditions which involve unavailability of the pressurizer power operated relief valves, during SI following a secondary system high energy line break and with min-flow line closed automatically, the centrifugal charging pumps could be damaged due to lack of minimum flow before presently applicable safety injection termination criteria are met. NRC required licensees of all operating PWR power reactor facilities to submit the information requested and schedule for any changes proposed within 60 days of the date of this letter.	In the US-APWR, minimum flow lines of safety injection pumps are normally open and shut-off operation of SI pumps are prevented during an accident.

Table 6.3-4 Response of US-APWR to Generic Letters and Bulletins (Sheet 9 of 12)

No.	Regulatory Position	US-APWR Design
BL 86-03	**POTENTIAL FAILURE OF MULTIPLE ECCS PUMPS DUE TO SINGLE FAILURE OF AIR-OPERATED VALVE IN MINIMUM FLOW RECIRCULATION LINE** At Point Beach the discharge lines for each of the SI pumps are connected to a common recirculation header to provide a test flow path and a recirculation flow path for minimum flow at times when the reactor coolant system pressure exceeds the SI pump shutoff head. The common recirculation header is provided with two air operated valves in series. Single failures of minimum flow recirculation lines containing air-operated isolation valves could result in a common-cause failure of all ECCS pumps in a system due to the deadheaded operation. Therefore, the NRC requires taking appropriate mitigating actions.	The shut-off operation of ECCS pumps due to common-cause failure is excluded from the US-APWR because the minimum flow line of each SI pump train is provided independently.
BL 88-04	**POTENTIAL SAFETY-RELATED PUMP LOSS** For the min-flow design of safety-related pumps, the NRC indicated the following concerns and requested each licensee to evaluate the validity of each plant: • If two or more pumps have a common min-flow line and one of the pumps is stronger than the other, the weaker pump may be shut-off and fail when the pumps are operating in the minimum flow mode. • If the installed min-flow capacity is not adequate, the pumps may fail during long-term min-flow operating following an accident.	In the US-APWR, the minimum flow line with sufficient capacity is installed independently for each SI pump train, and problems shown in this BL are not concerned.

Table 6.3-4 Response of US-APWR to Generic Letters and Bulletins (Sheet 10 of 12)

No.	Regulatory Position	US-APWR Design
BL 93-02	**DEBRIS PLUGGING OF EMERGENCY CORE COOLING SUCTION STRAINERS** In Perry Nuclear Plant, a BWR-6, the debris consisted of glass fibers from temporary filters that had been inadvertently dropped into the suppression pool, and corrosion products that had been filtered from the pool by the glass fibers adhering to the surface of the ECCS strainer. This caused unexpectedly rapid loss of available NPSH. NRC requested all holders of an operating license for nuclear power reactors (both PWR and BWR) to: • Identify fibrous air filters or other temporary source of fibrous material, not designed to withstand a LOCA, which are installed or stored in primary containment. • Take prompt action to remove any such material and ensure to perform ECCS functions.	This issue is discussed in DCD Chapter 6, Subsection 6.2.2.2.5.

Table 6.3-4 Response of US-APWR to Generic Letters and Bulletins (Sheet 11 of 12)

No.	Regulatory Position	US-APWR Design
BL 95-02	**UNEXPECTED CLOGGING OF A RESIDUAL HEAT REMOVAL (RHR) PUMP STRAINER WHILE OPERATING IN SUPPRESSION POOL COOLING MODE** In Limerick unit 1 which was being operated at 100% power, one safety relief valve was open. Cavitation was caused in the RHR pump which was operating to remove heat from suppression pool that received the fluid discharged from safety relief valve due to the fluctuation of motor current and flow rate. NRC requested the utility to review the operability of components such as ECCS and other pumps which draw suction from the suppression pool. In this bulletin, the NRC requested all holders of BWR operating licenses to take the following actions: • Review the operability of components such as ECCS and other pumps which draw suction from the suppression pool. The evaluation should be based on suppression pool cleanliness, suction strainer cleanliness, and the effectiveness of their foreign material exclusion practices. • The operability evaluation in the requested action above should be confirmed through appropriate test(s) and strainer inspection(s) within 120 days of the date of this bulletin. • In addition, addressees are requested to implement appropriate procedural modifications and other actions (e.g., suppression pool cleaning), as necessary, to minimize foreign material in the suppression pool, drywell and containment. Addressees are requested to verify their operability evaluation through appropriate testing and inspection.	This issue is discussed in subsection 6.2.2.2.5.

Table 6.3-4 Response of US-APWR to Generic Letters and Bulletins (Sheet 12 of 12)

No.	Regulatory Position	US-APWR Design
BL 96-03	**POTENTIAL PLUGGING OF EMERGENCY CORE COOLING SUCTION STRAINERS BY DEBRIS IN BOILING-WATER REACTORS** NRC requested all BWR licensees to implement appropriate procedural measures and plant modifications to minimize the potential for clogging of ECCS suppression pool suction strainers by debris (e.g., insulations, corrosion products, other particulates (paint chips, and concrete dusts)) generated during a LOCA. All licensees are requested to implement these actions by the end of the first refueling outage starting after January 1, 1997.	This issue is discussed in subsection 6.2.2.2.5.
BL 01-01	**CIRCUMFERENTIAL CRACKING OF REACTOR PRESSURE VESSEL HEAD PNENETRATION NOZZLE** In the light of the axial cracking discovered at the reactor pressure vessel head penetration nozzle in Oconee Nuclear Station Unit 1 (PWR), NRC requested all holders of operating licenses for PWR to provide the requested information.	N/A RV head does not have penetration for safety injection in the US-APWR.
BL 02-01	**REACTOR PRESSURE VESSEL HEAD DEGRADATION AND REACTOR COOLANT PRESSURE BOUNDARY INTEGRITY** This bulletin supplemented the BL-2001-01 and recommended that, for inspection of reactor pressure vessel head penetration , visual examinations should be provided with supplemental examination (by surface or volumetric examination). The NRC also requested all PWR licensees to provide information related to the inspection programs to ensure compliance with applicable regulatory requirements.	N/A RV head does not have penetration for safety injection in the US-APWR.

Table 6.3-5 Safety Injection System Design Parameters (Sheet 1 of 3)

Description	Specification
ECC/CS Strainer	
Type	Disk layer type
Number	4 sets
Surface Area	2,150 ft^2 per train
Material	Stainless Steel
Design Flow	5,200 gpm per train
Hole diameter of perforated plate	No larger than 1/16 inch
Equipment Class	2
Seismic Category	I
Safety Injection Pump	
Type	Horizontal multi-stage centrifugal pump
Number	4
Power Requirement	970 kW
Design Flow	1,540 gpm
Design Head	1,640 ft.
Minimum Flow	265 gpm
Design Pressure	2,135 psig
Design Temperature	300°F
Maximum Operating Temperature	Approximately 250°F
Fluid	Boric Acid Water
NPSH Available	21.9 ft. at 1,540 gpm
NPSH Required	15.7 ft.
Material of Construction	Stainless Steel
Equipment Class	2
Seismic Category	I

Table 6.3-5 Safety Injection System Design Parameters (Sheet 2 of 3)

Description	Specification
Accumulator	
Type	Vertical Cylindrical Tank
Number	4
Capacity	3,180 ft^3 each
Design Pressure	700 psig
Design Temperature	300°F
Normal Operating Pressure	Approximately 640 psig
Normal Operating Temperature	70 ~ 120°F
Accumulator Safety Valve	1,500 ft^3/min (N_2) at 700 psig
Accumulator N_2 Supply Line Safety Valve Capacity	1,500 ft^3/min (N_2) at 700 psig
Fluid	Boric Acid Water (Approximately 4,000 ppm)
Material of Construction	Carbon steel vessel with stainless steel cladding
Auxiliaries	Flow Damper
Water Volume	≥2,126 ft^3 Note 1
Large Flow Injection Volume	≥1,326.8 ft^3 Note 2
Equipment Class	2
Seismic Category	I
Accumulator Injection Line Resistance	
Piping and Valves Equivalent Length (L/D)	≥ 461.7 ≤ 564.3
Orifice and Pipe Exit Resistance Coefficient	≥ 1.99 ≤ 2.21

Note:
1. This volume does not include dead volume.
2. Nominal value is 1,342 ft^3 .

Table 6.3-5 Safety Injection System Design Parameters (Sheet 3 of 3)

Description	Specification
NaTB Basket	
Type	Rectangular
Number	23
Total Buffering Agent Quantity (minimum)	44,100 pounds
Design Pressure	Atmosphere
Design Temperature	300°F
Normal Operating Temperature	70 ~120°F
Buffering Agent	Sodium Tetraborate Decahydrate
Material of Construction	Stainless Steel
Equipment Class	2
Seismic Category	I
NaTB Basket Container	
Type	Semi-rectangular
Number	3
Capacity	A:1155ft^3, B:925ft^3, C:925ft^3
Design Pressure	Atmosphere
Design Temperature	300°F
Normal Operating Temperature	70 ~120°F
Fluid	Boric Acid Water
Material of Construction	Stainless Steel
Design Code	ASME Section III, Class 2
Equipment Class	2
Seismic Category	I
Refueling Water Storage Pit	
Type	Pit Type
Number	1
Capacity	81,230 ft^3
Design Pressure	Atmosphere [Note 1]
Design Temperature	300°F
Temperature during normal operation	70 ~ 120°F
Peak Temperature following LOCA	Approximately 250°F
Fluid	Boric Acid Water
Material of Construction	Stainless Steel
Equipment Class	2
Seismic Category	I

Notes:

1. For structural design, an outside pressure occurring in accident 9.6 psi is reflected.

Table 6.3-6 Failure Modes and Effects Analysis - Safety Injection System (Sheet 1 of 11)

Component	Failure Mode	Plant Condition	Effect on System Operation	Failure Detection Method	Remarks
1. SI Pump A (B, C, and D analogous)	Failure to deliver flow	Small-break LOCA (not DVI LOCA)	No effect on plant safety because three, 50% SI pumps remain and only two are required.	SI pump operating information in the MCR includes flow, suction and discharge pressure, pump motor current, and RUN indication for each pump.	
		Small-break LOCA (DVI LOCA)	No effect on plant safety because three SI pumps remain. and only One SI pump spills and only one is required.		
		Large-break LOCA	No effect on plant safety because three, 50% SI pumps remain and only two are required.		
		Non-LOCA	No effect on plant safety because three, 50% SI pumps remain and only two pumps are required.		
		Safe shutdown; provide emergency boration and preserve RCS inventory	No effect on plant safety because three, 50% SI pumps remain and only two are required.		

Table 6.3-6 Failure Modes and Effects Analysis - Safety Injection System (Sheet 2 of 11)

Component	Failure Mode	Plant Condition	Effect on System Operation	Failure Detection Method	Remarks
1. SI Pump A (B, C, and D analogous) (cont.)	Failure to deliver flow with one SI train out of service	Small-break LOCA (not DVI LOCA)	No effect on plant safety because two, 50% SI pumps remain and only two are required.	SI pump operating information in the MCR includes flow, suction and discharge pressure, pump motor current, and RUN indication for each pump.	
		Small-break LOCA (DVI LOCA	No effect on safety because two SI pumps remain. One SI pump spills and only one is required.		
		Large-break LOCA	No effect on safety because two, 50% SI pumps remain and two pumps are required.		
		Non-LOCA	No effect on safety because two, 50% SI pumps remain and two are required.		
		Safe shutdown; provide emergency boration and preserve RCS inventory	No effect on safety because two, 50% SI pumps remain and two are required.		

Table 6.3-6 Failure Modes and Effects Analysis - Safety Injection System (Sheet 3 of 11)

Component	Failure Mode	Plant Condition	Effect on System Operation	Failure Detection Method	Remarks
2. Direct vessel safty injection line isolation valve SIS-MOV-011A (SIS-MOV-011B, C and D analogous)	Failure to throttle on demand	Safe shutdown	No effect on plant safety because associated SI pump A can be stopped. Three SI trains remain and only two are required.	Valve position indication in MCR.	
	Failure to close on demand	LOCA; re-align two SI pumps to hot leg injection	No effect on plant safety because remaining two SI trains can realign and only one is required.		

Table 6.3-6 Failure Modes and Effects Analysis - Safety Injection System (Sheet 4 of 11)

Component	Failure Mode	Plant Condition	Effect on System Operation	Failure Detection Method	Remarks
2. Direct vessel safety injection line isolation valve SIS-MOV-011A (SIS-MOV-011B, C and D analogous) (cont.)	Failure to throttle on demand with one SI train out of service	Safe shutdown	No effect on plant safety because SI pump A can be stopped. Two SI trains remain and two are required.	Valve position indication in MCR.	
	Failure to close on demand with one SI train out of service	LOCA; re-align one SI pump to hot leg injection	No effect on plant safety because remaining one SI train can realign and only one is required.		

Table 6.3-6 Failure Modes and Effects Analysis - Safety Injection System (Sheet 5 of 11)

Component	Failure Mode	Plant Condition	Effect on System Operation	Failure Detection Method	Remarks
3. Hot leg injection isolation valve SIS-MOV-014A (B, C and D analogous)	Failure to open on demand	LOCA; re-align two SI trains to hot leg injection	Failure prevents use of SI train A for hot leg injection. No effect on plant safety because the remaining two SI trains can realign and only one is required (two normally used).	Valve position indication in MCR.	
	Failure to open on demand while one SI train is out of service	LOCA; realign one SI train to hot leg injection	Failure prevents use of SI train A for hot leg injection. No effect on plant safety because one SI train can realign and only one is required.		

Table 6.3-6 Failure Modes and Effects Analysis - Safety Injection System (Sheet 6 of 11)

Component	Failure Mode	Plant Condition	Effect on System Operation	Failure Detection Method	Remarks
4. Accumulator discharge valve SIS-MOV-101A (SIS-MOV-101B, C and D analogous)	Failure to close on demand	Safe shutdown; isolate accumulator A from the RCS prior to depressurization to prevent introducing nitrogen into RCS	No effect on plant safety because the accumulator nitrogen gas volume can be vented by opening the accumulator nitrogen discharge valve, and atmospheric vent SIS-MOV-121A or B.	Valve position indication in MCR.	Valves SIS-MOV-121A and B are parallel vents to the atmosphere and are powered from different Class 1E supplies.
	Failure to close on demand with a Class 1E supply out of service		No effect on plant safety because the accumulator nitrogen gas volume can be vented by opening the accumulator nitrogen discharge valve, and atmospheric vent SIS-MOV-121A or B.		

Table 6.3-6 Failure Modes and Effects Analysis - Safety Injection System (Sheet 7 of 11)

Component	Failure Mode	Plant Condition	Effect on System Operation	Failure Detection Method	Remarks
5. Accumulator nitrogen discharge valve SIS-MOV-121A (SIS-MOV-121B analogous)	Failure to open on demand	Safe shutdown; vent accumulator A, B, C, or D of nitrogen prior to RCS depressurization	No effect on plant safety because the common nitrogen vents to atmosphere valves SIS-MOV-121A and B are connected in parallel; only one valve is needed to vent the nitrogen from accumulators.	Valve position indication in MCR.	Valve SIS-MOV-101A and B can be on both electrical train A and B. Valve SIS-MOV-101C and D can be on electrical train C and D. Therefore, if one electrical train is out of service, Valve SIS-MOV-101A can be closed.
	Failure to open on demand with one Class-1E electrical supply out of service		No effect on plant safety because valve SIS-MOV-101A can be closed (power from alternate Class-1E supply).		

Table 6.3-6 Failure Modes and Effects Analysis - Safety Injection System (Sheet 8 of 11)

Component	Failure Mode	Plant Condition	Effect on System Operation	Failure Detection Method	Remarks
6. Accumulator nitrogen supply line isolation valve SIS-MOV-125A (SIS-MOV-125B, C and D analogous)	Failure to open on demand	Safe shutdown; vent accumulator nitrogen prior to RCS depressurization	No effect on plant safety because the accumulator nitrogen is not normally vented in safe shutdown. (Accumulator discharge valve SIS-MOV-101A is closed on RCS depressurization to prevent introducing nitrogen into the RCS on shutdown. See Item 4 above).	Valve position indication in MCR.	Valve SIS-MOV-101A and B, and valve SIS-MOV-125C and D can be on both electrical train A and B. Valve SIS-MOV-101C and D, and valve SIS-MOV-125A and B can be on both electrical train C and D.
	Failure to open on demand with one electrical supply out of service		No effect on plant safety because the accumulator nitrogen is not normally vented in safe shutdown. (Accumulator discharge valve SIS-MOV-101A is closed on RCS depressurization to prevent introducing nitrogen into the RCS on shutdown. See Item 4 above).		

Table 6.3-6 Failure Modes and Effects Analysis - Safety Injection System (Sheet 9 of 11)

Component	Failure Mode	Plant Condition	Effect on System Operation	Failure Detection Method	Remarks
7. Emergency letdown line isolation valves SIS-MOV-031B and SIS-MOV-032B (SIS-MOV-031D and SIS-MOV-032D analogous)	Failure to open on demand	Safe shutdown; emergency letdown (RWSP feed and bleed)	No effect on plant safety because redundant emergency letdown from the RCS loop D is available and adequate for safe shutdown.	Open/close position indication MCR.	Four emergency letdown isolation valves are on different dc power electrical trains. On line maintenance of dc power electrical train is prohibited.

Table 6.3-6 Failure Modes and Effects Analysis - Safety Injection System (Sheet 10 of 11)

Component	Failure Mode	Plant Condition	Effect on System Operation	Failure Detection Method	Remarks
8. I & C for SI initiation	Failure to deliver fluid due to loss of ECCS actuation signal	LOCA, Non-LOCA	Same as Item 1.	Same as Item 1.	
	Failure to deliver fluid due to loss of ECCS actuation signal with one SI train out of service.				
9. Class 1E ac power source	Failure to deliver fluid due to loss of ac power.	LOCA, Non-LOCA, Safe Shutdown	Same as Item 1.	Same as Item 1.	
	Failure to deliver fluid due to loss of ac power with one SI train out of service.				

Table 6.3-6 Failure Modes and Effects Analysis - Safety Injection System (Sheet 11 of 11)

Component	Failure Mode	Plant Condition	Effect on System Operation	Failure Detection Method	Remarks
10. Class 1E dc power source	Failure to open Emergency letdown line isolation valves on demand due to loss of dc power.	Safe Shutdown	Same as Item 7.	Same as Item 7. Four emergen-cy letdown isolation valves are on different dc power electrical train.	

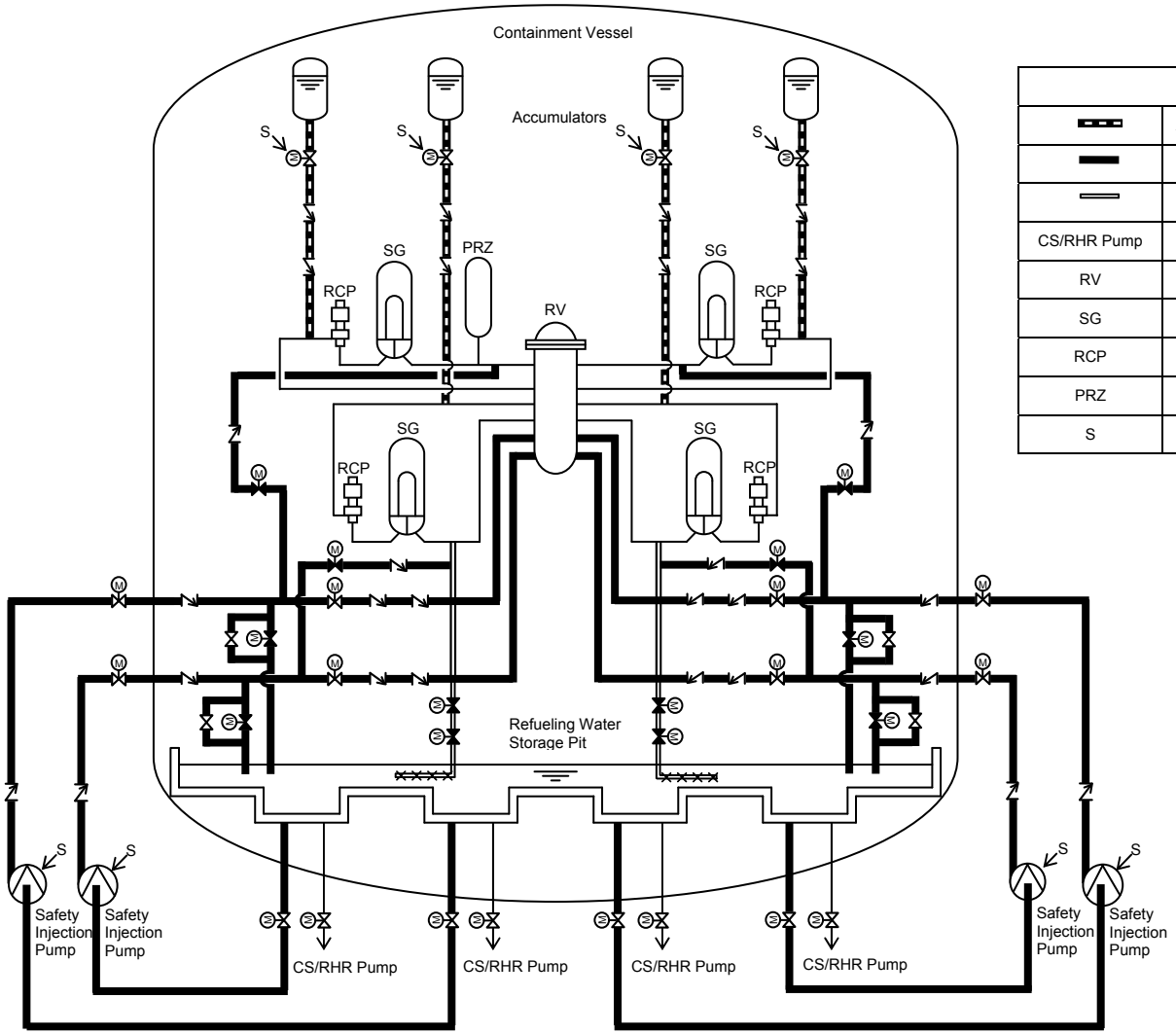

Legend	
	Accumulator System
	High Head Injection System
	Emergency Letdown System
CS/RHR Pump	Containment Spray / Residual Heat Removal Pump
RV	Reactor Vessel
SG	Steam Generator
RCP	Reactor Coolant Pump
PRZ	Pressurizer
S	Safety Injection Signal

Figure 6.3-1 Emergency Core Cooling System Schematic Flow Diagram

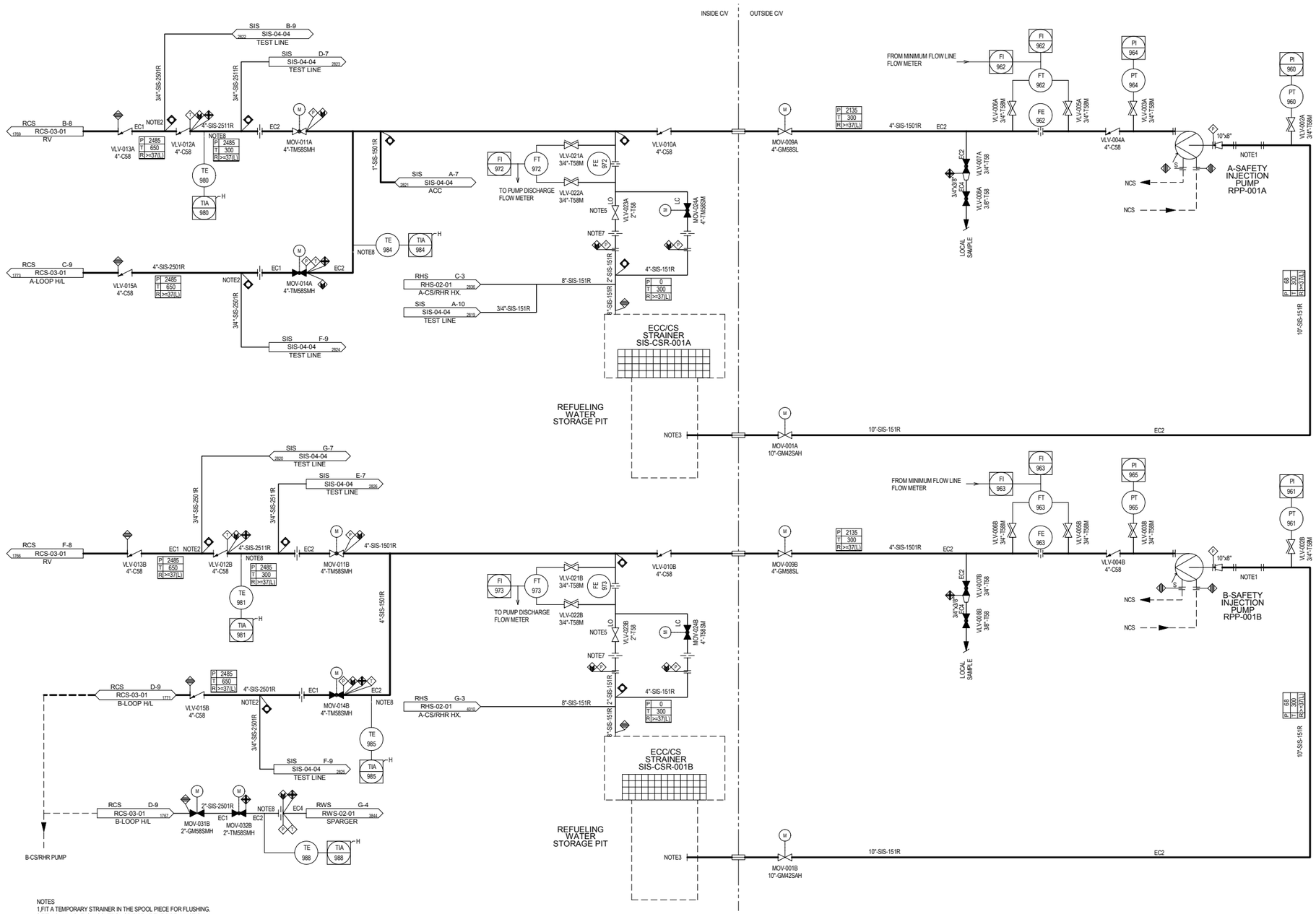

NOTES
1.FIT A TEMPORARY STRAINER IN THE SPOOL PIECE FOR FLUSHING.
2.FIT A 9.5MM I.D. FLOW CONTROL ORIFICE AT THE PIPE JUNCTION.
3.FLANGE CONNECTION FOR LEAKAGE TEST
4.DELETED
5.MANUAL VALVE WITH LIMIT SWITCH
6.DELETED
7.RAISE THE ORIFICE DOWNSTREAM PIPING TO A LEVEL HIGHER THAN THE MAIN SI LINE BEFORE FITTING TO THE RWSP.
8.SURFACE MOUNTED RESISTANCE TEMPERATURE DETECTOR.

Figure 6.3-2 ECCS Piping and Instrumentation Diagram (Sheet 1 of 4)

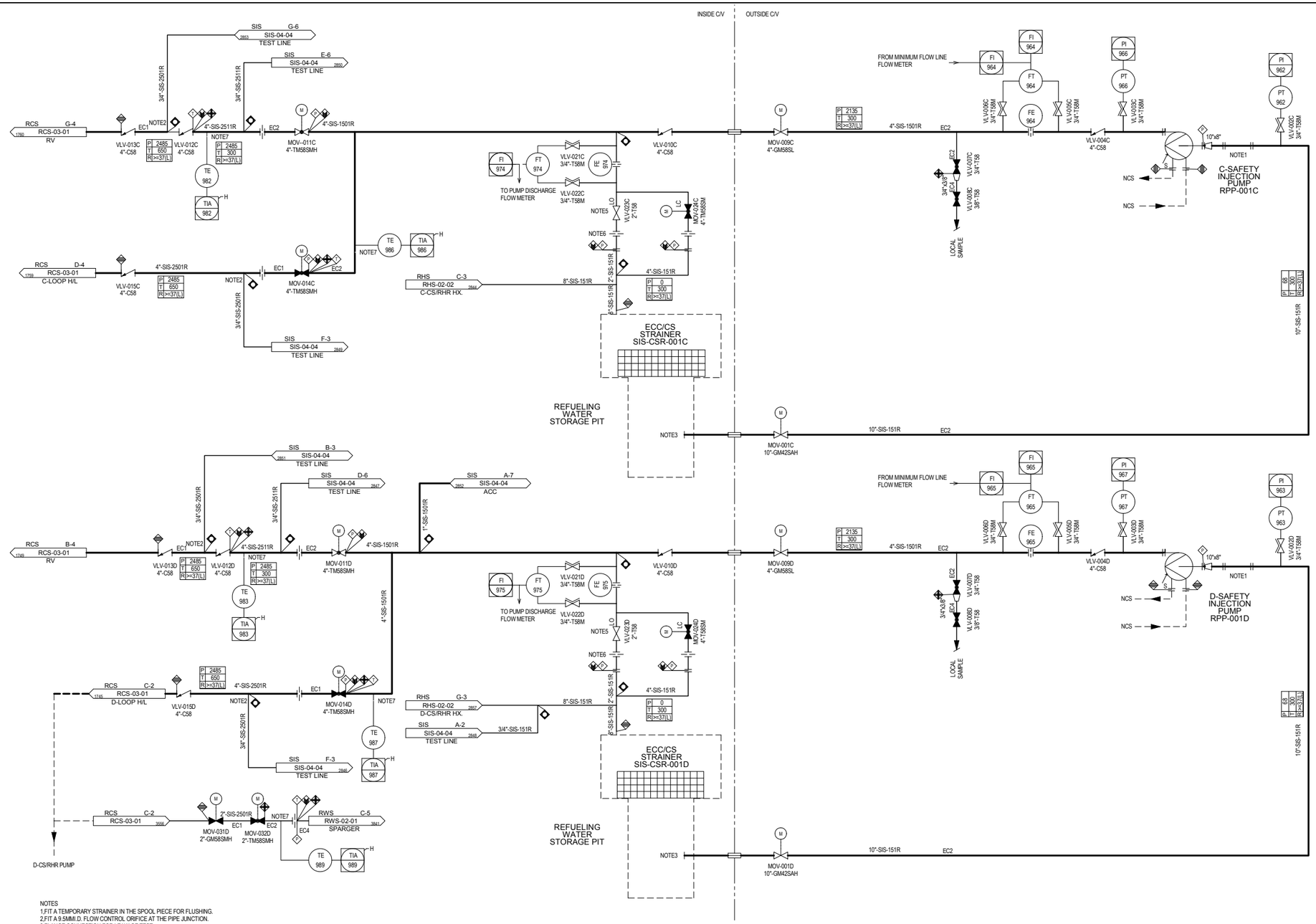

Figure 6.3-2 ECCS Piping and Instrumentation Diagram(Sheet 2 of 4)

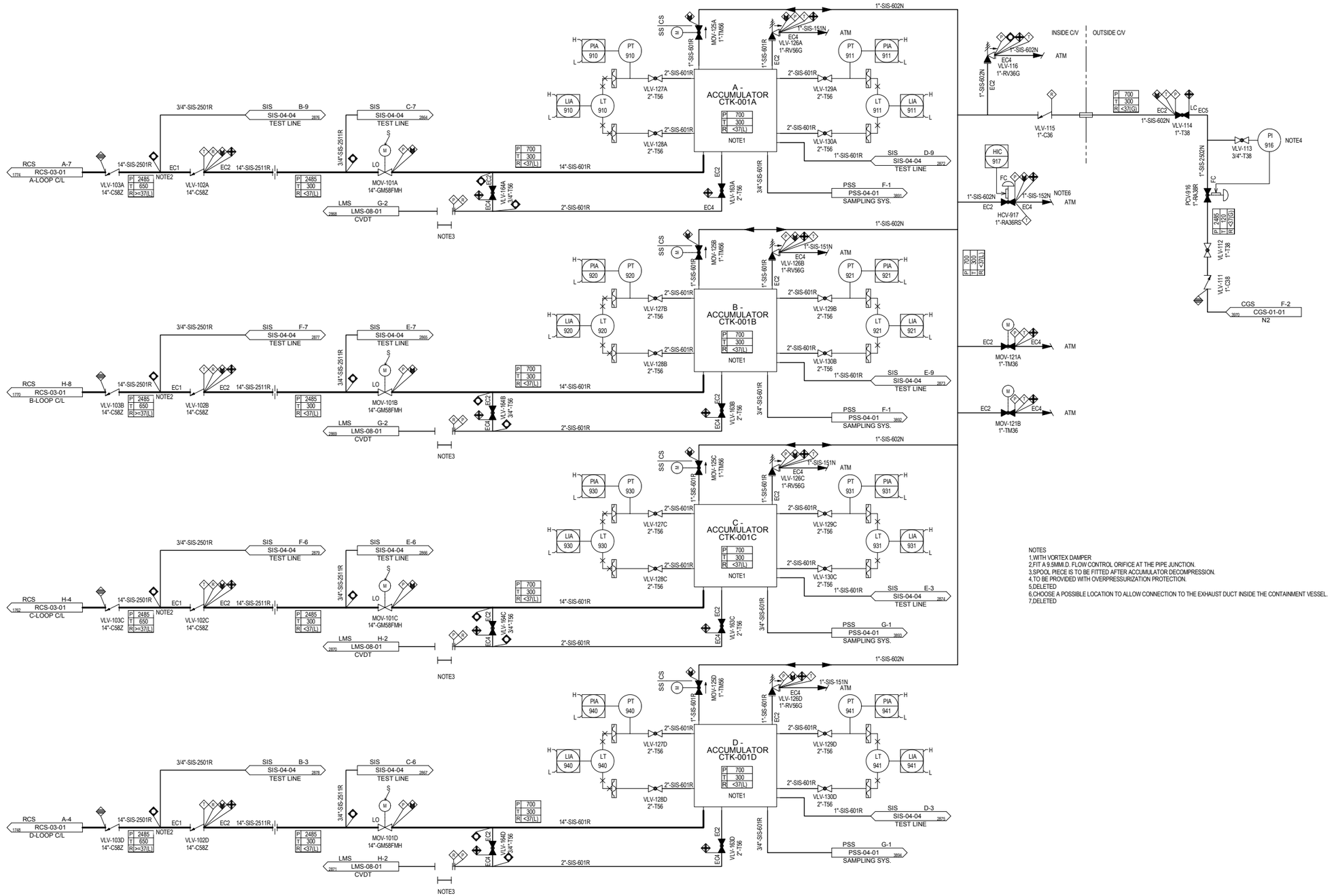

Figure 6.3-2 ECCS Piping and Instrumentation Diagram (Sheet 3 of 4)

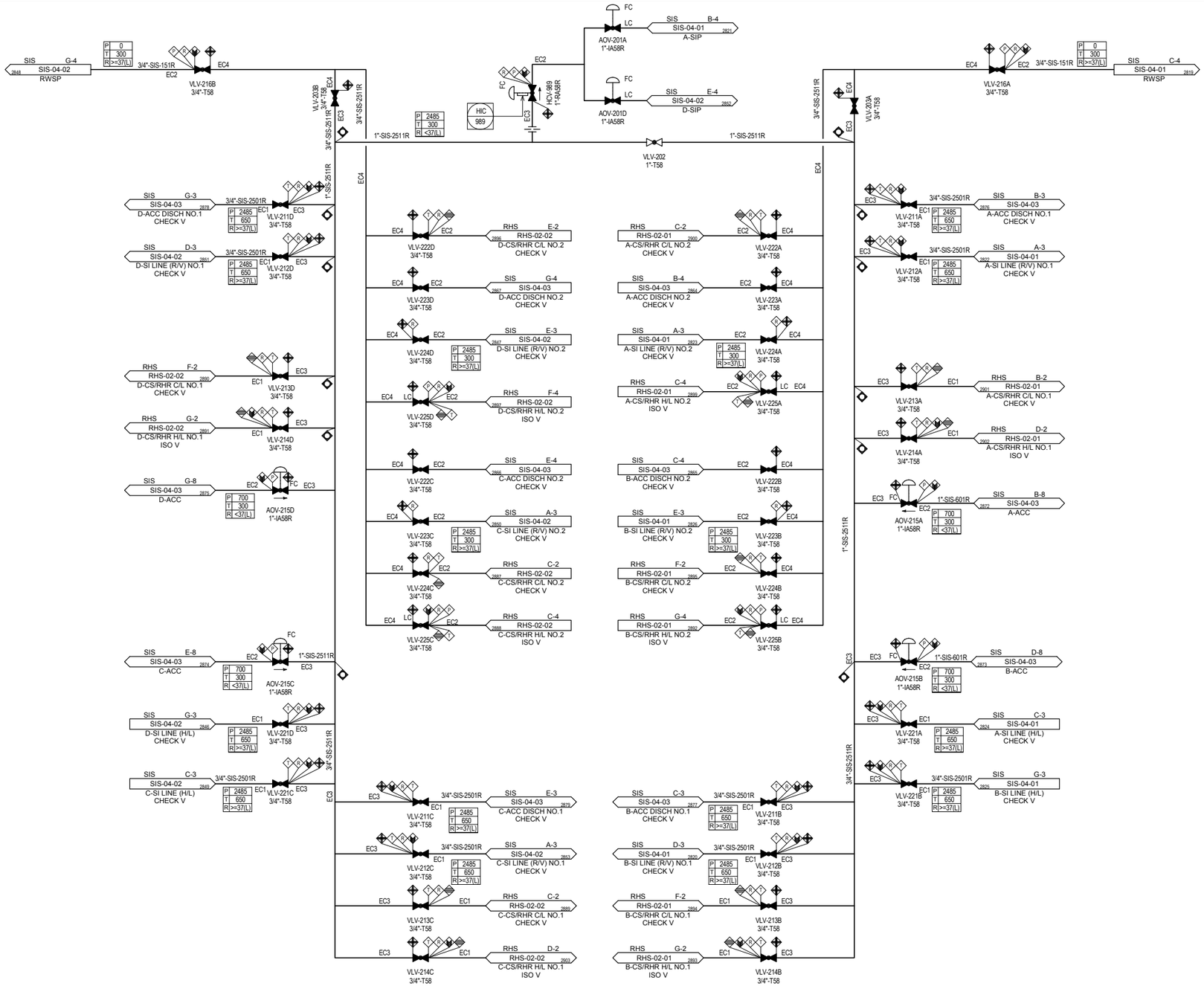

Figure 6.3-2 ECCS Piping and Instrumentation Diagram (Sheet 4 of 4)

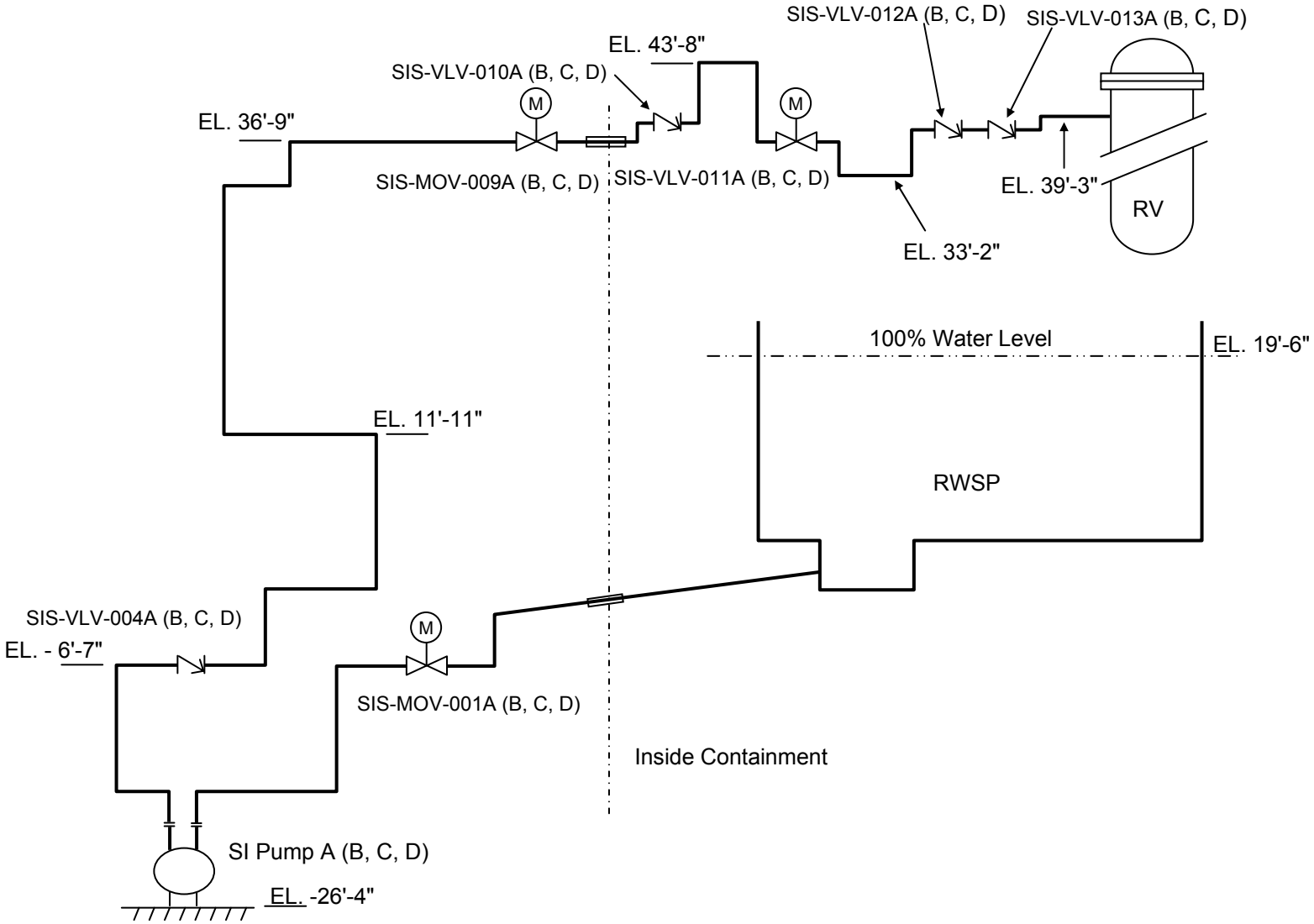

Figure 6.3－3 SIS Elevation Diagram

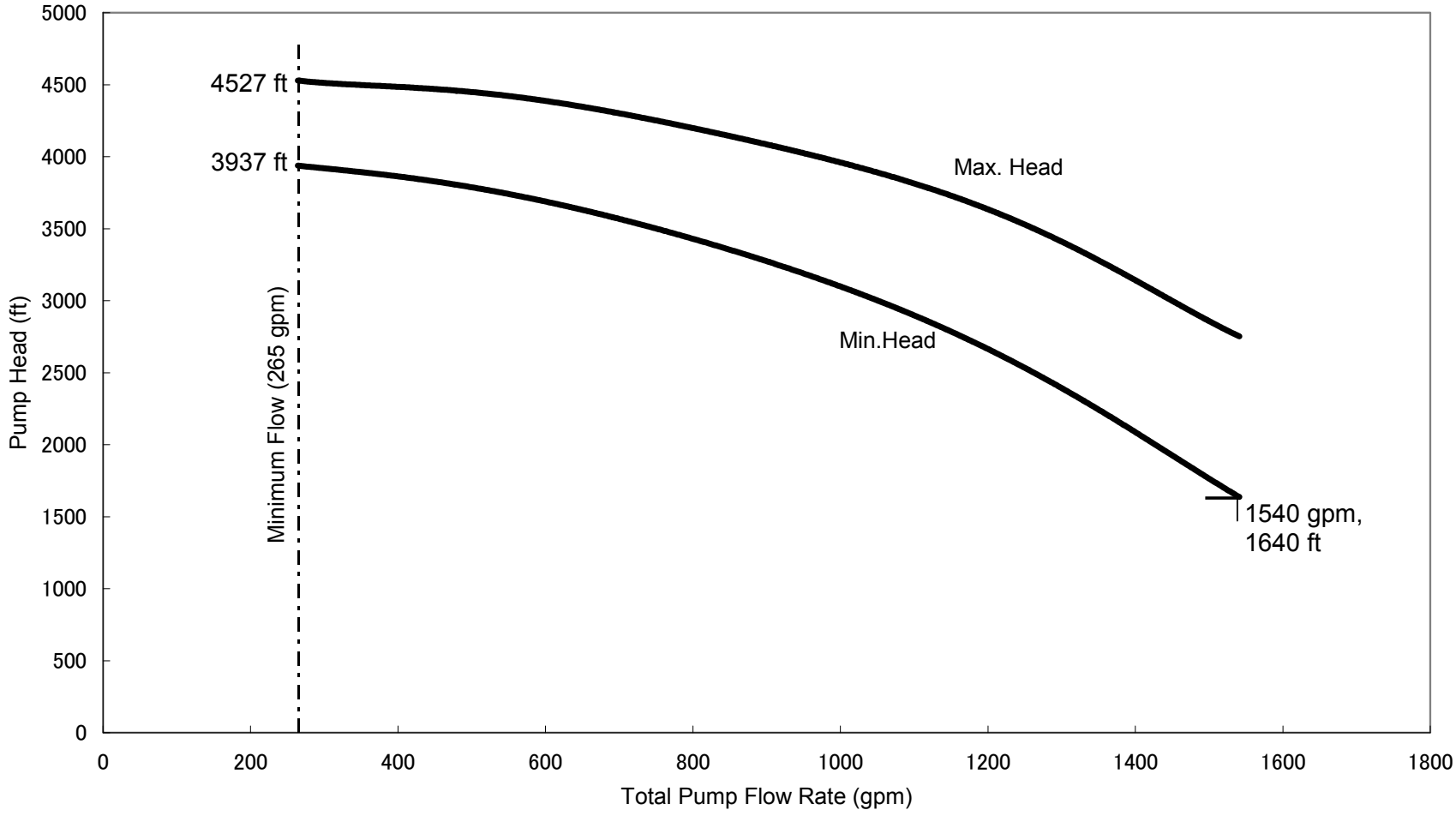

Figure 6.3-4 Safety Injection Pump Performance Flow Requirement

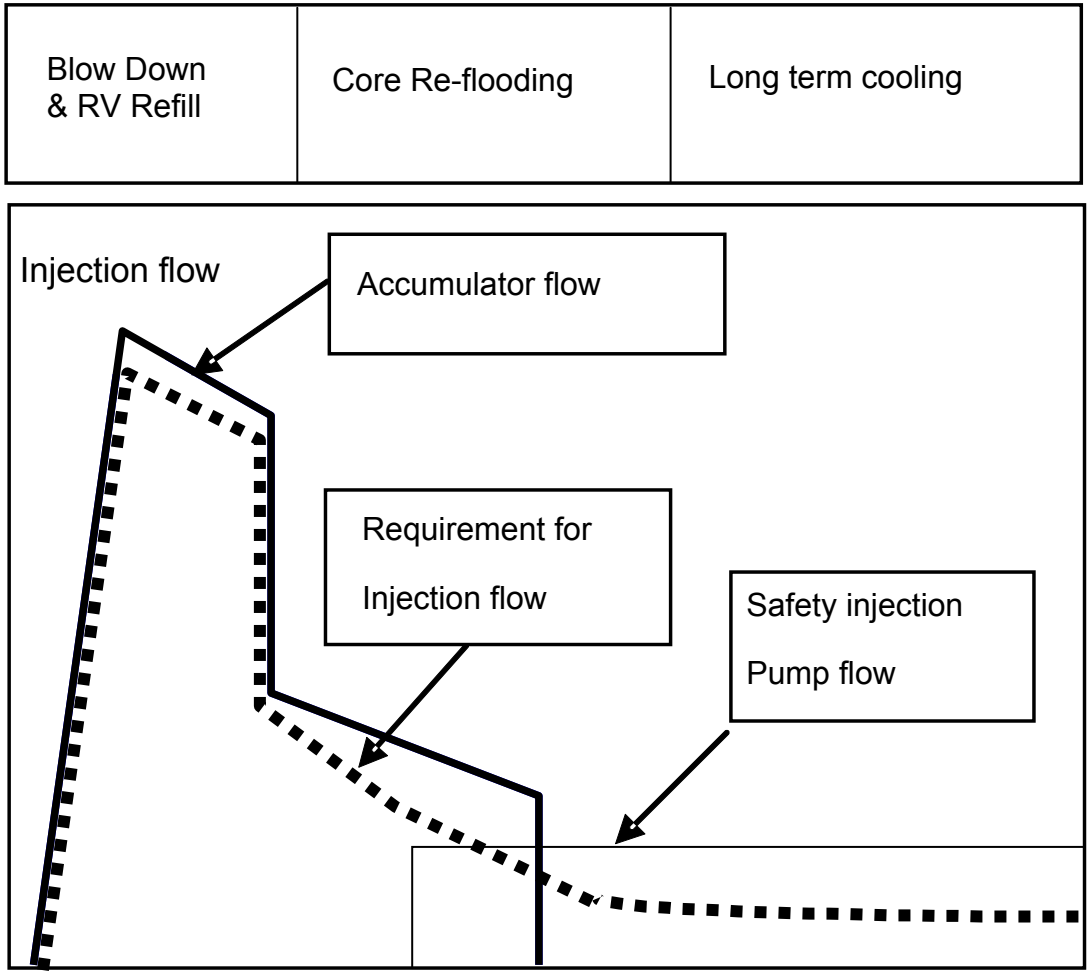

Figure 6.3-5 Accumulator Flow Schematic Characteristics

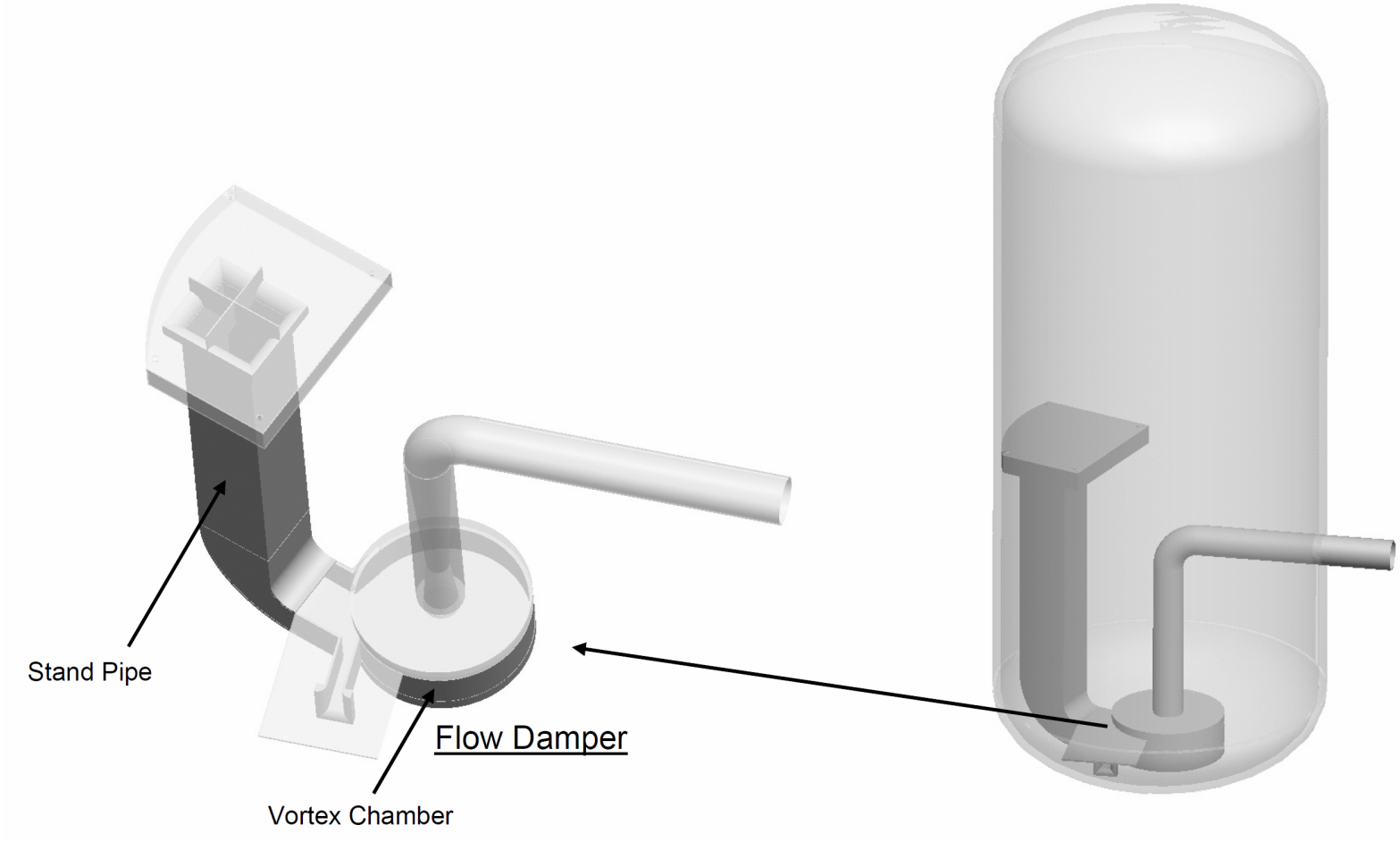

Figure 6.3-6 Overview of the Accumulator

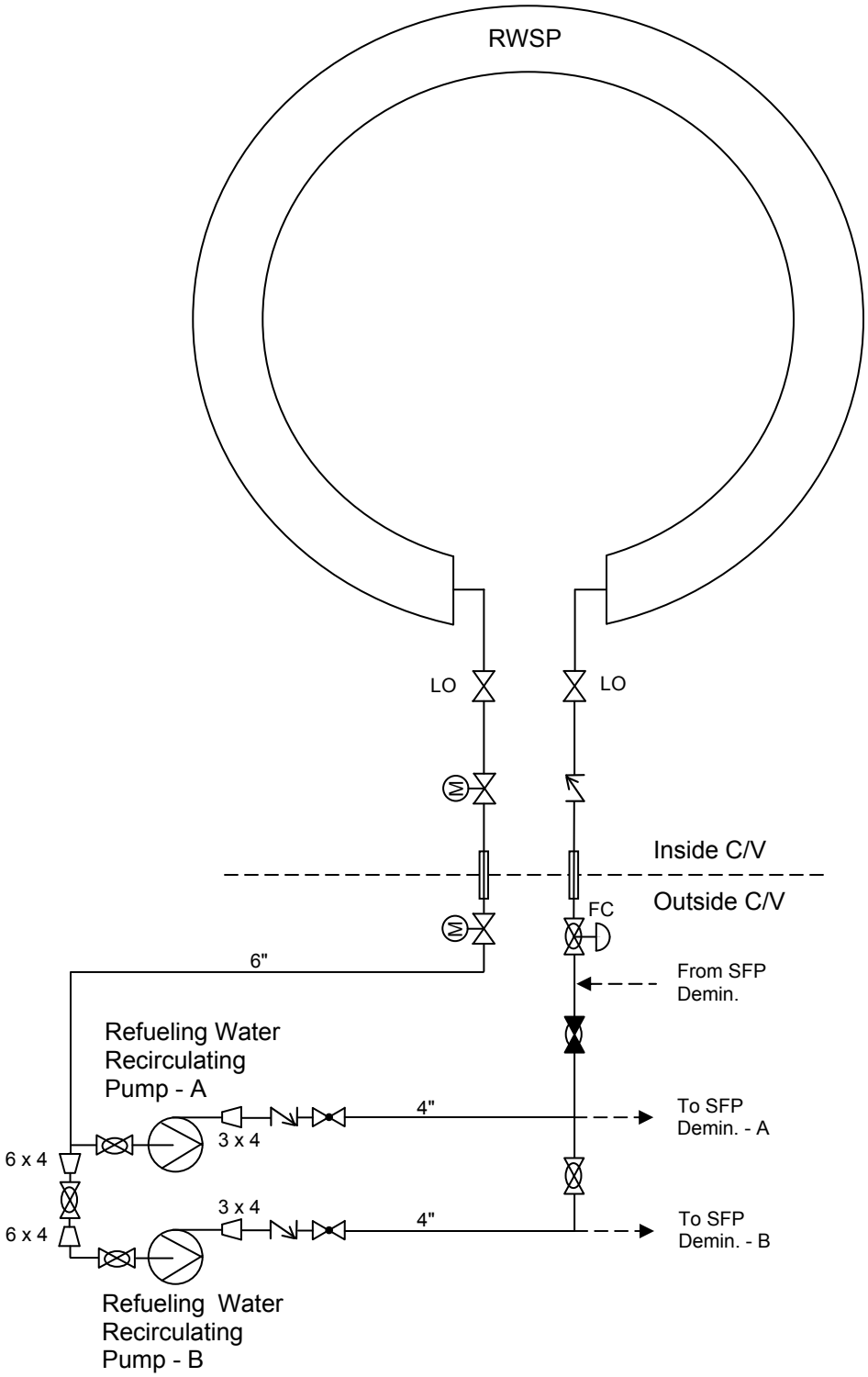

Figure 6.3-7 Refueling Water Storage System

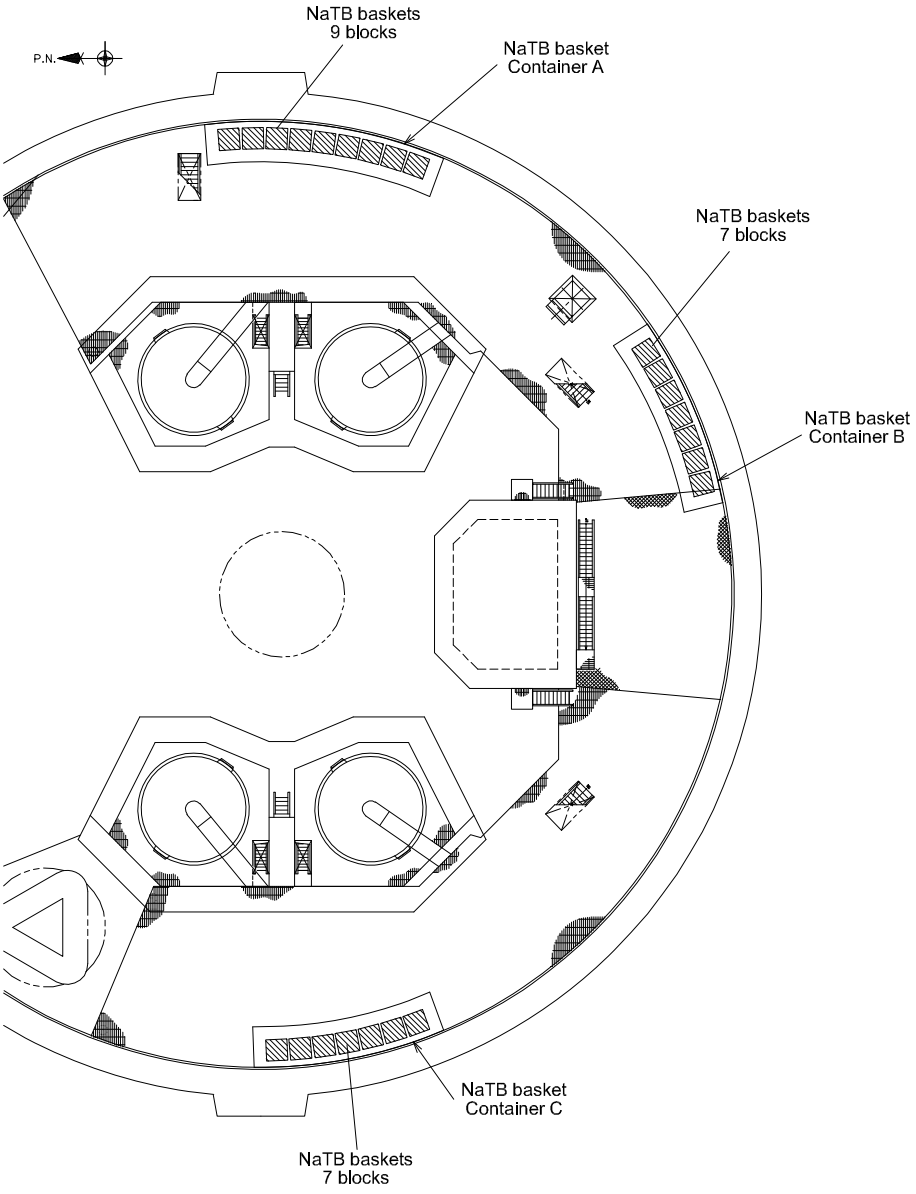

Figure 6.3-8 NaTB Baskets Plan View

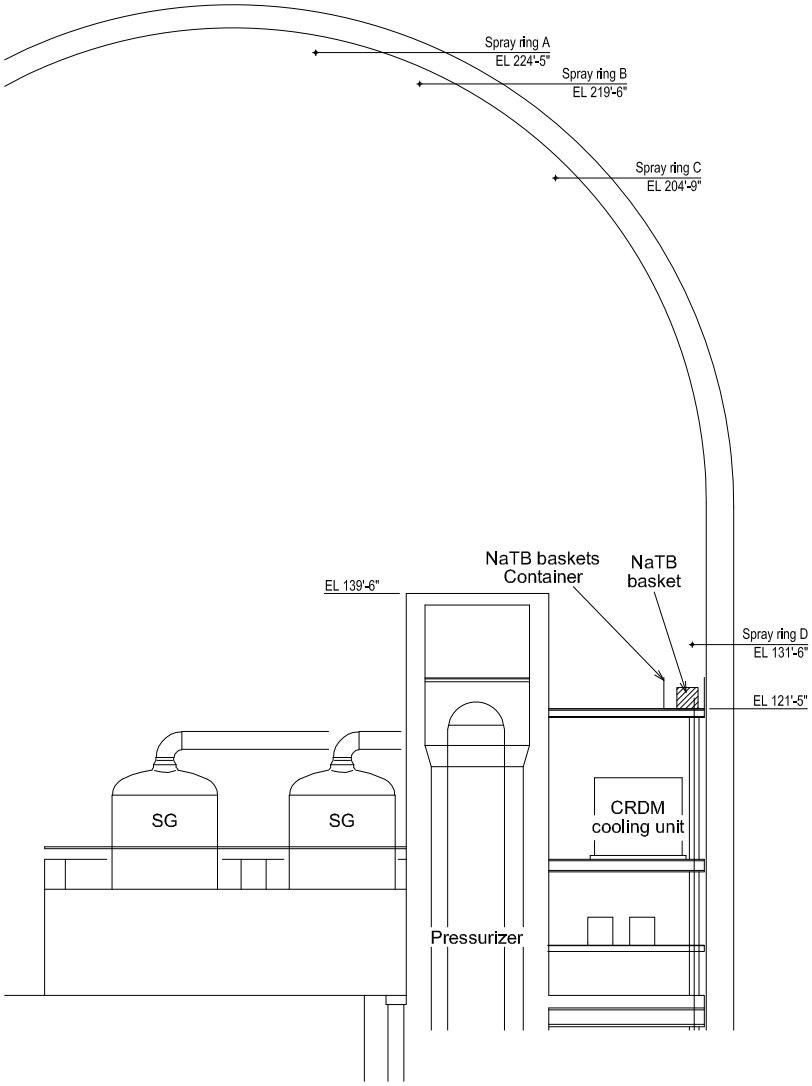

Figure 6.3-9 NaTB Baskets Sectional View

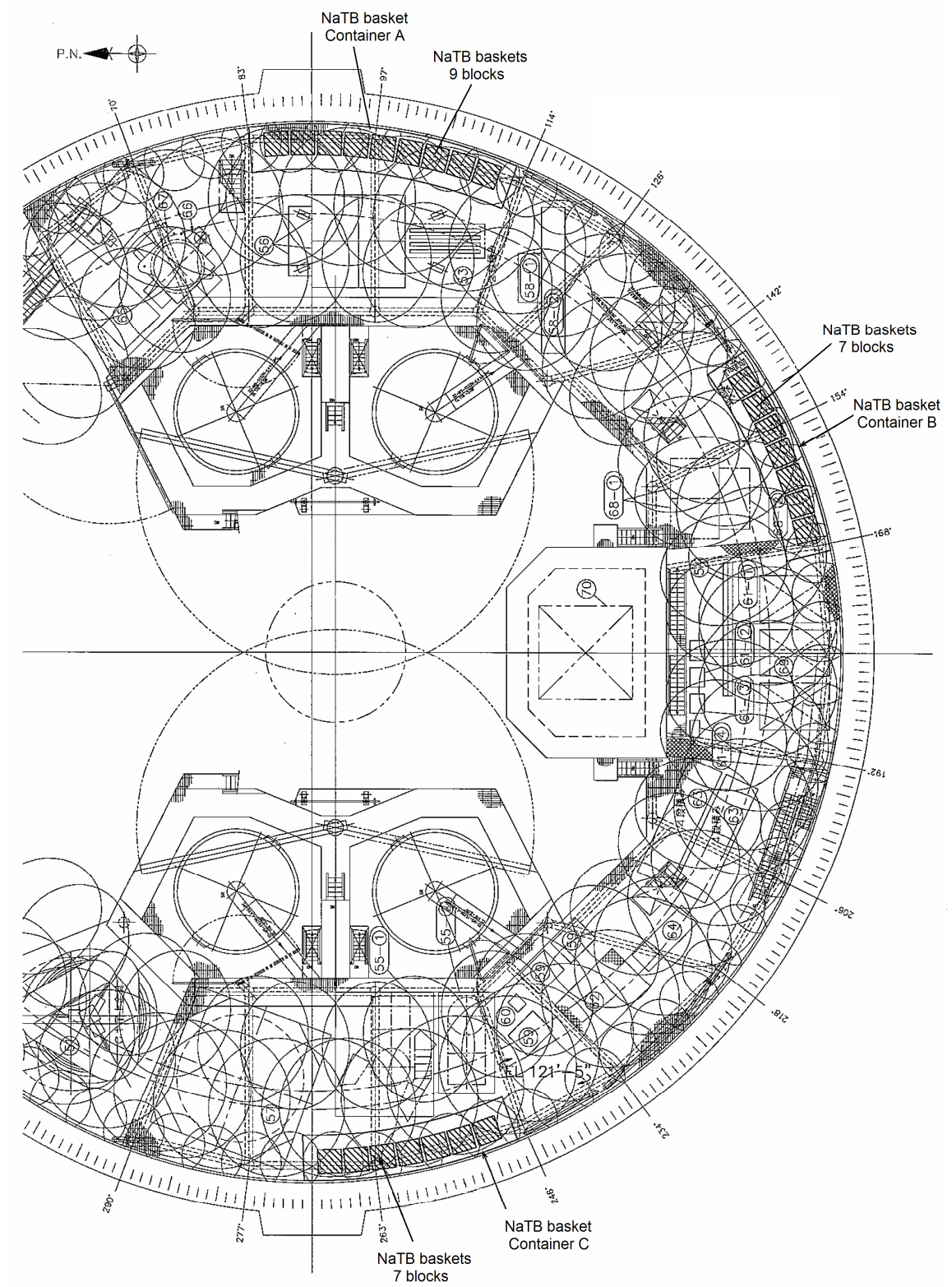

Figure 6.3-10 Containment Spray Pattern Plan View at the NaTB Basket Installation Level

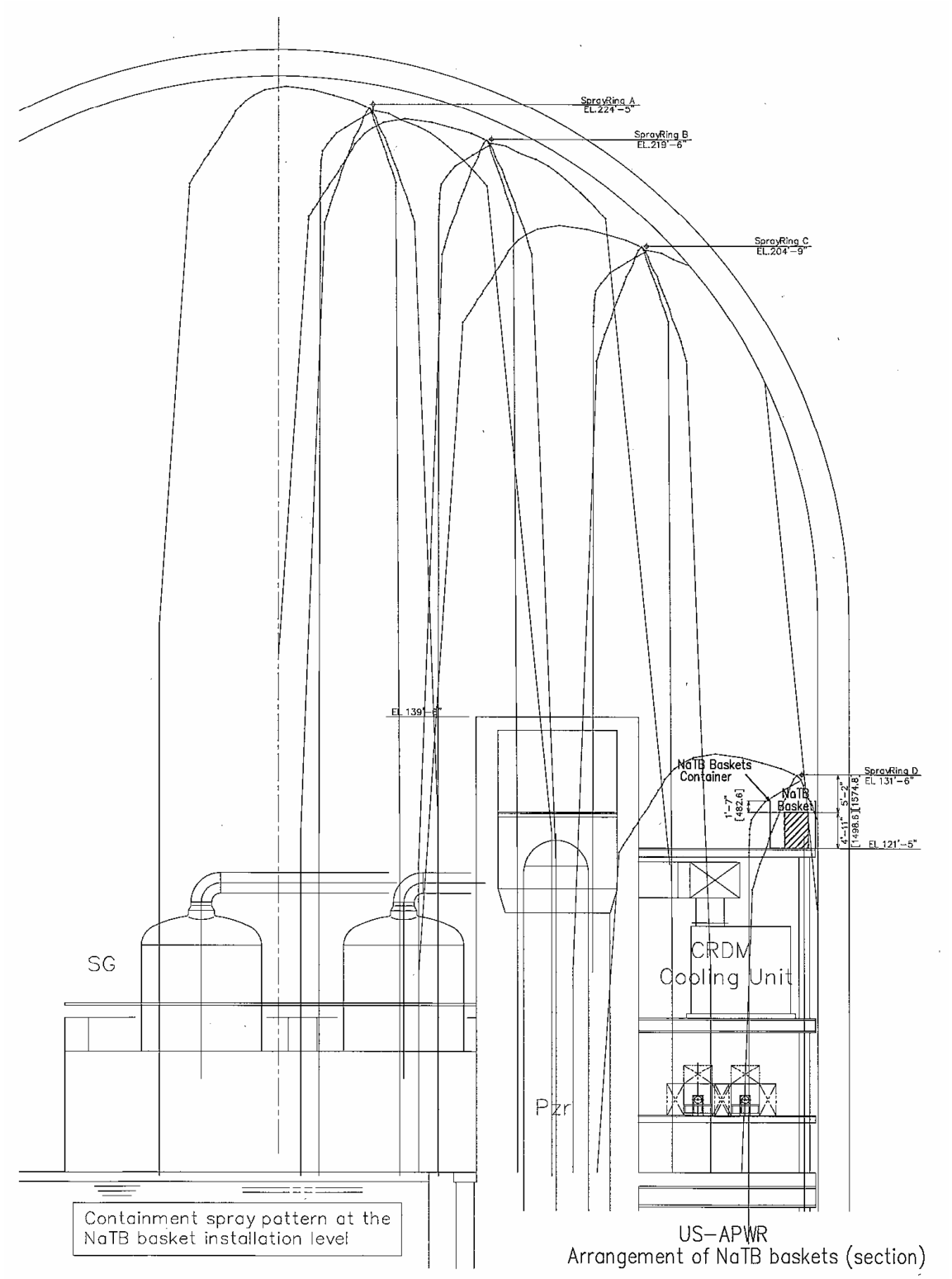

Figure 6.3-11 Containment Spray Pattern Sectional View at the NaTB Basket Installation Level

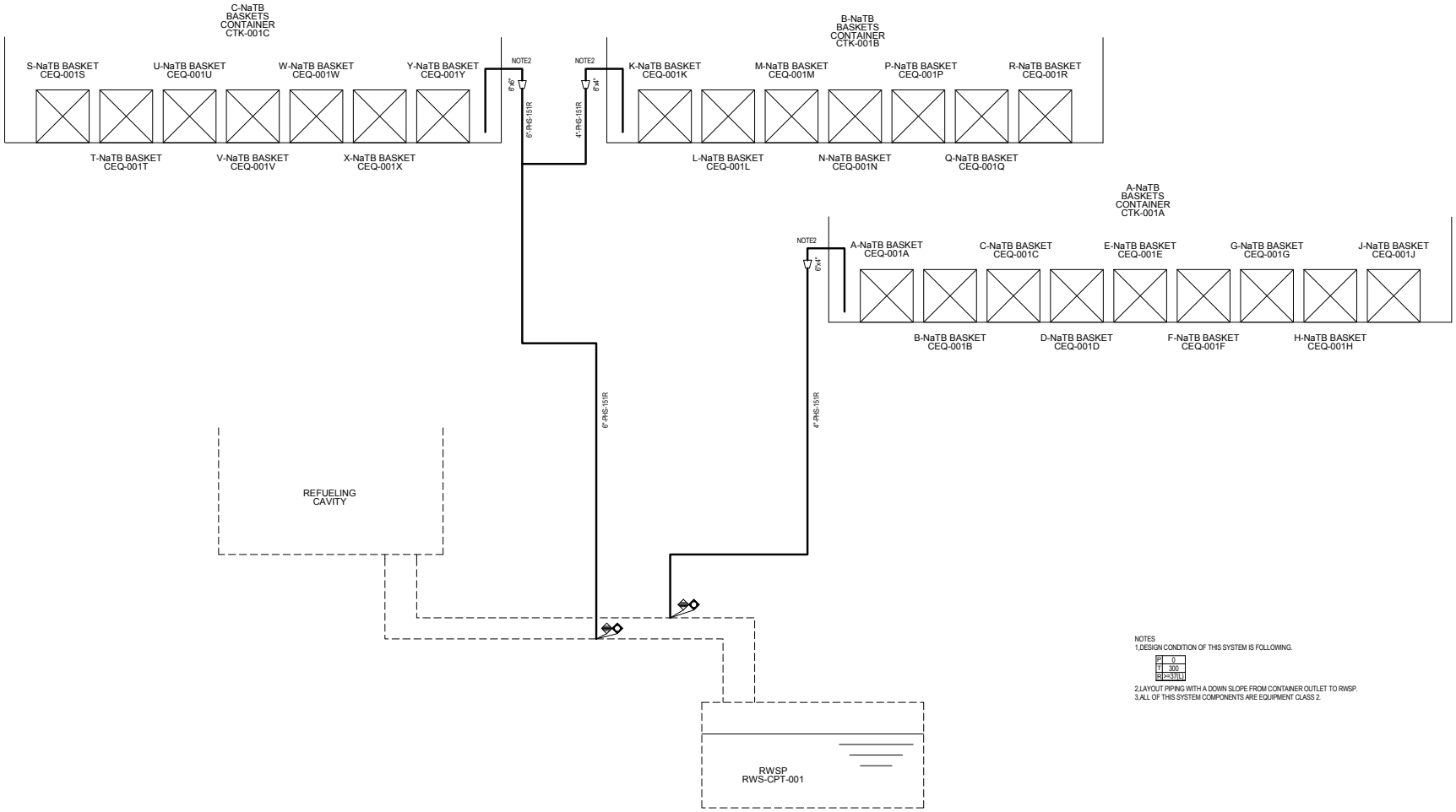

Figure 6.3-12 NaTB Solution Transfer Piping Diagram

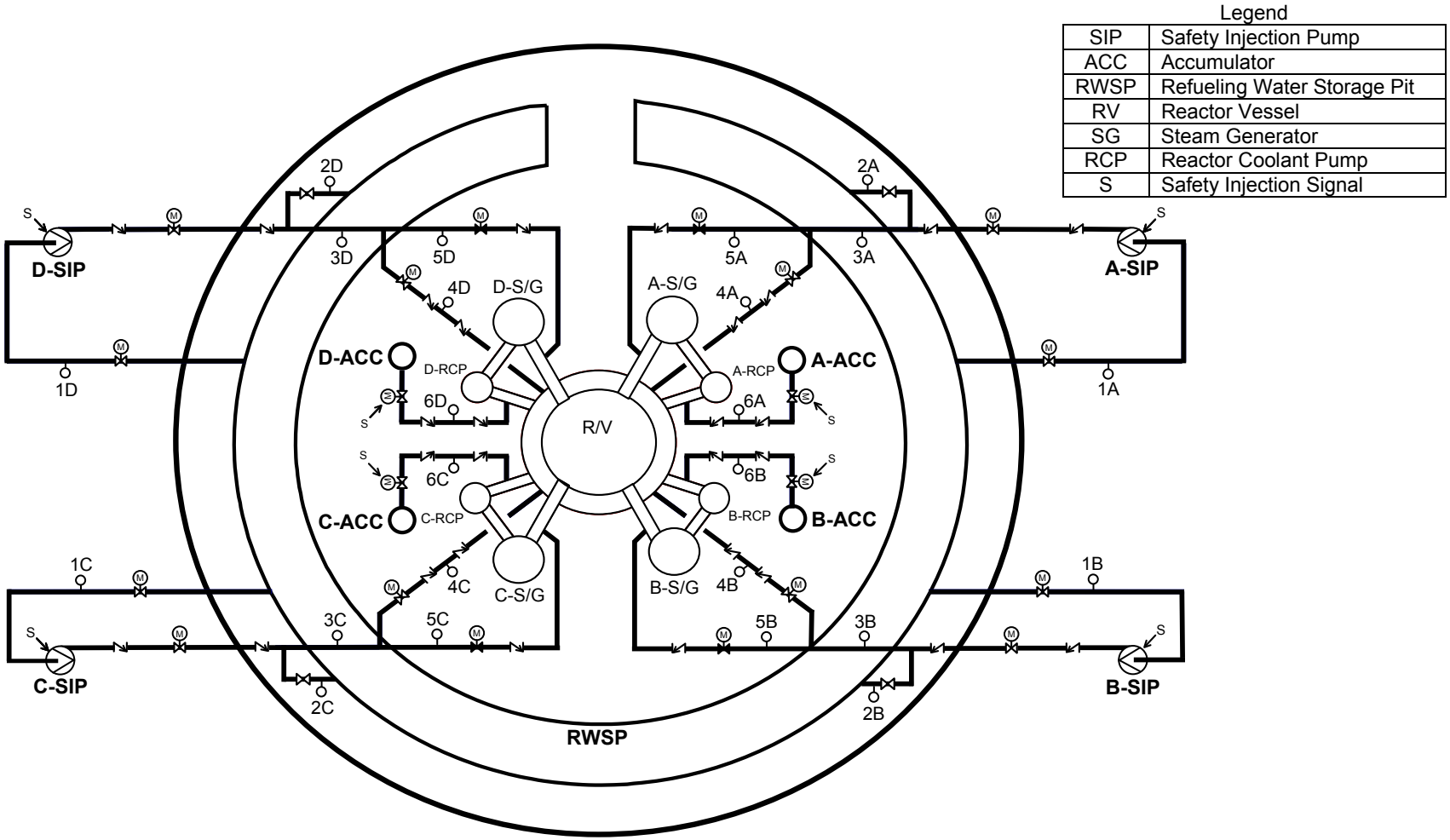

Location	1A	2A	3A	4A	5A	6A	1B	2B	3B	4B	5B	6B	1C	2C	3C	4C	5C	6C	1D	2D	3D	4D	5D	6D
Flow Rate (gpm)	1540	210	1330	1330	0	19000	1540	210	1330	1330	0	19000	1540	210	1330	1330	0	19000	1540	210	1330	1330	0	19000

Figure 6.3-13 ECCS Process Flow Diagram (RV Injection)

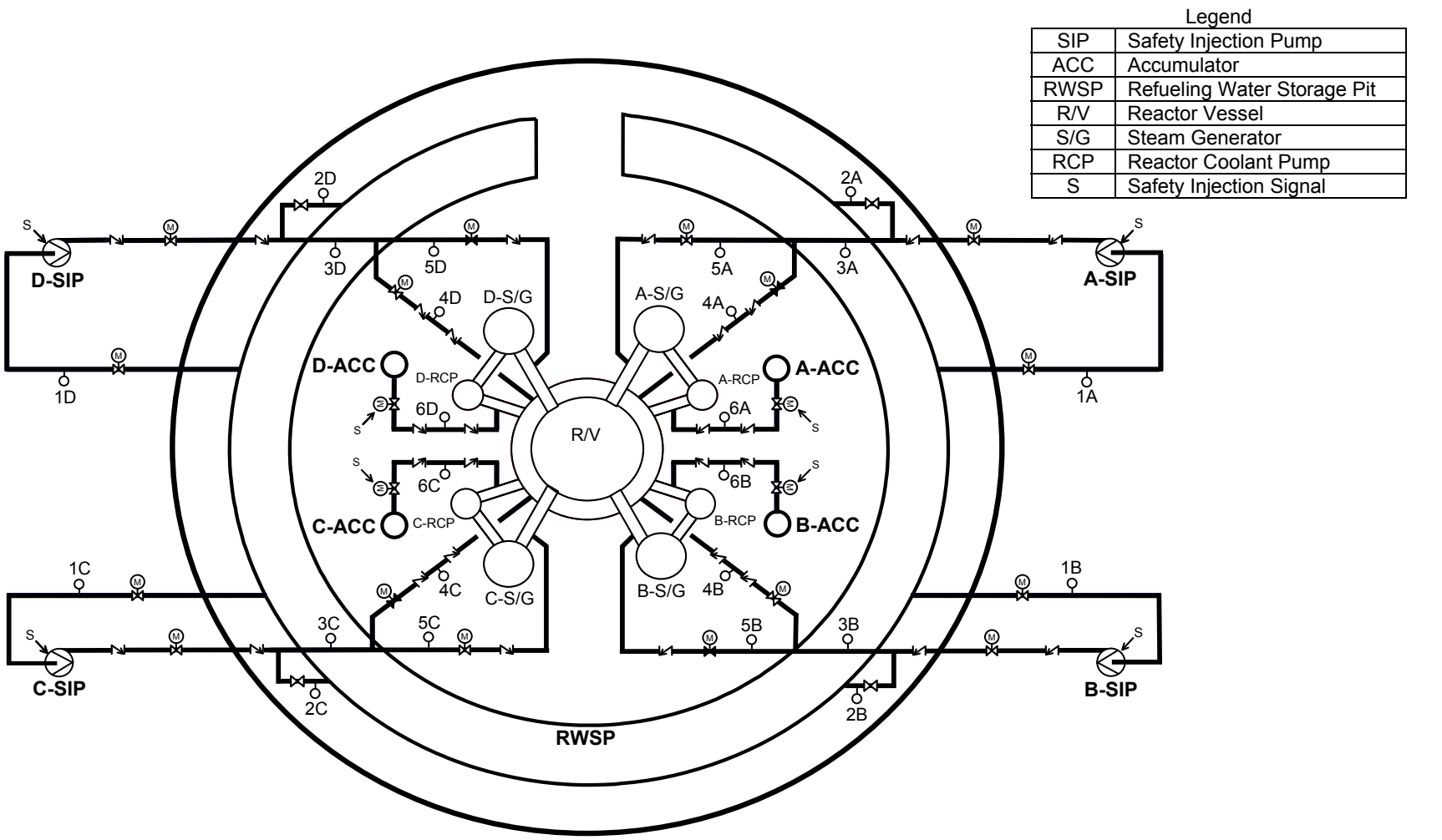

Location	1A	2A	3A	4A	5A	6A	1B	2B	3B	4B	5B	6B	1C	2C	3C	4C	5C	6C	1D	2D	3D	4D	5D	6D
Flow (gpm)	1540	210	1330	0	1330	0	1540	210	1330	1330	0	0	1540	210	1330	0	1330	0	1540	210	1330	1330	0	0

Figure 6.3-14 ECCS Process Flow Diagram (Simultaneous RV and hot leg Injection)

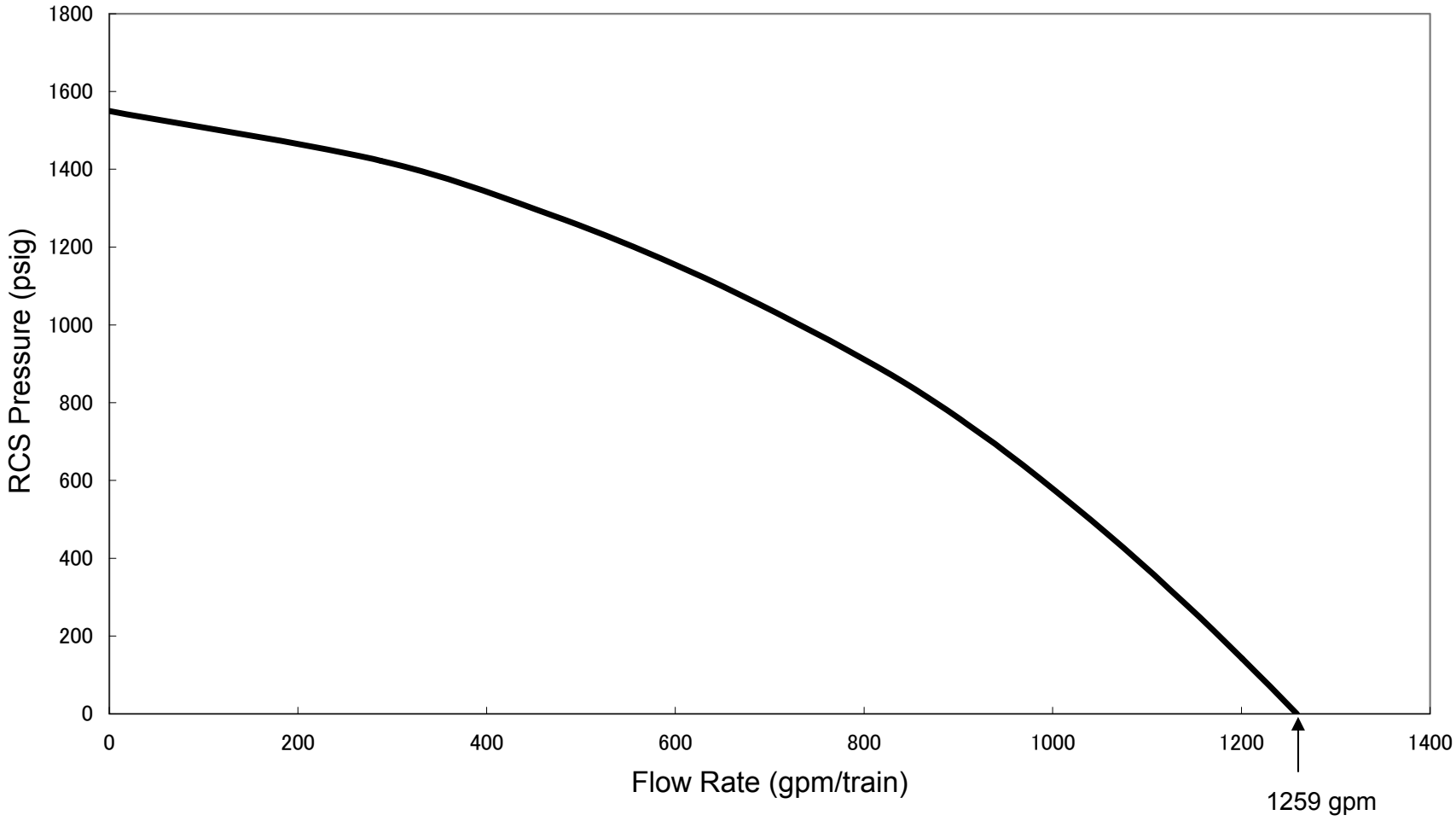

Figure 6.3-15 High Head Safety Injection Flow Characteristic Curve (Minimum Safeguards)

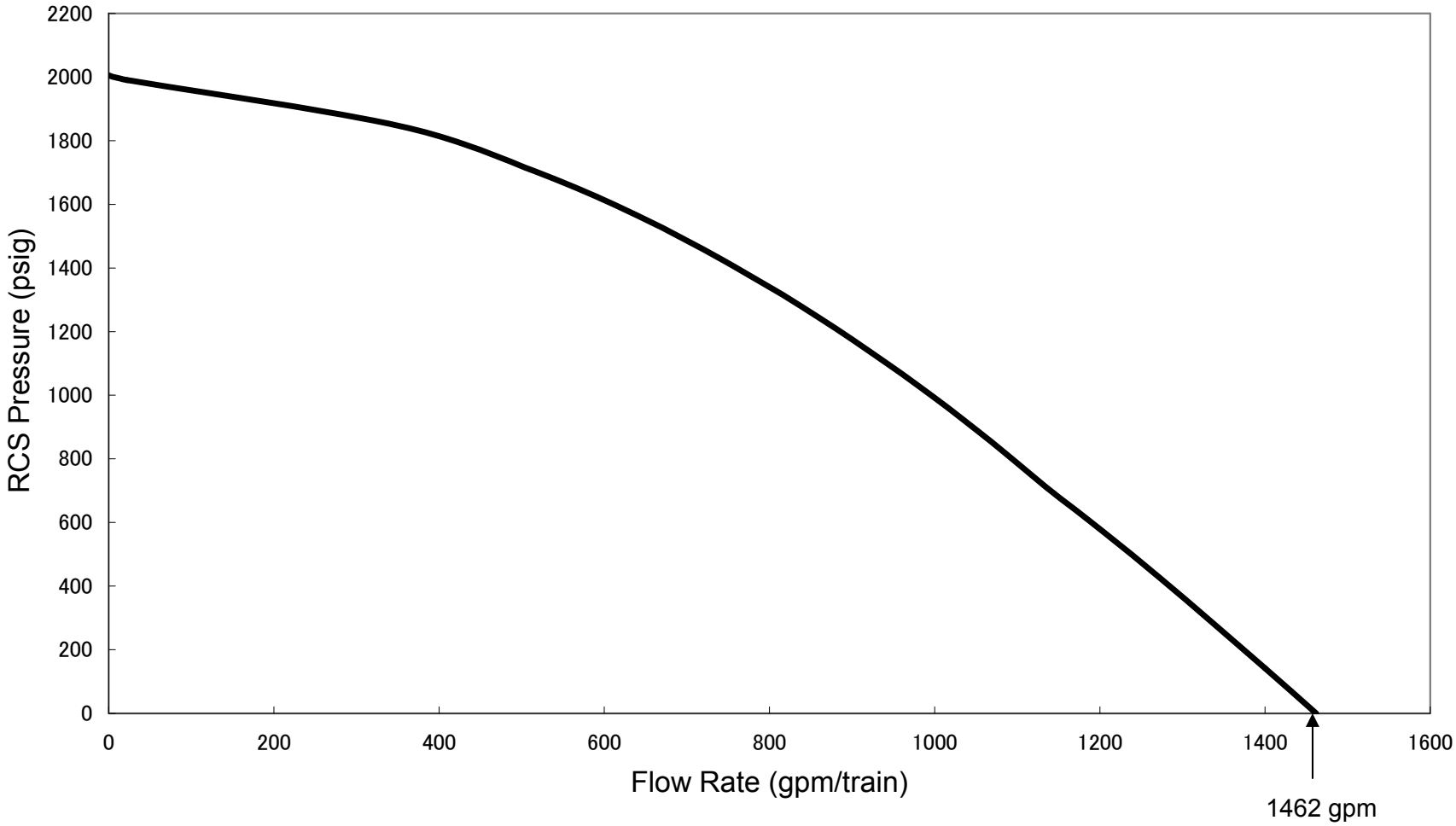

Figure 6.3-16 High Head Safety Injection Flow Characteristic Curve (Maximum Safeguards)

6.4 Habitability Systems

The habitability systems for the MCR allow operators to remain safely inside the control room envelope (CRE) and take the actions necessary to manage and control the plant under normal and abnormal plant conditions, including a LOCA. The CRE boundary is shown in Figure 6.4-1. The MCR habitability systems protect operators against a postulated release of radioactive material, natural phenomenon induced missiles, radioactive shine, smoke, and toxic gases. The MCR habitability systems enable operators and technical staff to occupy the CRE safely for the duration of accidents analyzed in Chapter 15, "Transient and Accident Analyses." These systems, as well as applicable chapter and subsection references, include the following:

- MCR HVAC system (Chapter 9, subsection 9.4.1)
- MCR emergency filtration system (Part of MCR HVAC system)
- Radiation monitoring system (Chapter 7)
- Radiation shielding (Chapter 12)
- Lighting system (Chapter 9, subsection 9.5.3)
- Fire protection system (Chapter 9, subsection 9.5.1)

The CRE includes the MCR and is served by the MCR HVAC system during normal and abnormal conditions, as well as control room smoke purge operations, as described in Chapter 9, subsection 9.4.1. Personnel occupying the CRE are protected from the respiratory effects and eye irritation of smoke.

6.4.1 Design Basis

The CRE contains food, water, medical supplies and sanitary facilities accessible and sufficient to support the physical needs of five plant staff members for six days. The CRE contains the information resources (e.g., technical reference material, monitors, displays, and communications) and access to plant monitoring and controls necessary to manage the postulated accidents in Chapter 15.

Two 100% capacity MCR emergency filtration units, including fans, are provided. Each MCR emergency filtration unit is capable of meeting the control room access and occupancy requirements of Criterion 19 of Appendix A to 10CFR50 (Ref. 6.4-1), including the requirements for radiation protection. Either MCR emergency filtration unit is capable of establishing and maintaining the design positive pressure in the CRE with respect to the surrounding areas to minimize un-filtered inleakage during emergency operation in pressurization mode.

The design of the MCR emergency filtration units is based on ensuring that the radiation dose (total effective dose equivalent [TEDE]) to MCR operators is well below 10CFR50, Appendix A "General Design Criteria 19" guidelines (Ref. 6.4-1) (5 roentgen equivalent in man [rem] TEDE) while occupying the CRE for the duration of the most severe Chapter 15 accident. The MCR emergency filtration design basis also ensures that

control room personnel and equipment are protected in an environment satisfactory for extended performance.

As noted in Chapter 3, the MCR HVAC system is designed to Equipment Class 3, Seismic Category I standards. The CRE is an area of the control room complex in the power block. Accordingly, the CRE is, by definition, the same equipment class, and seismic category (e.g., Equipment Class 3, Seismic Category I) as the MCR.

6.4.2 System Design

The MCR HVAC system has two emergency modes: pressurization mode and isolation mode.

The pressurization mode protects the MCR operators and staff within the CRE during the accident conditions postulated in Chapter 15. The pressurization mode is initiated automatically by the MCR isolation signal (refer to Chapter 7), i.e., any one of the following:

- ECCS actuation signal is present
- Airborne radioactive material is detected in the outside air intakes

The isolation mode protects the MCR operators and staff within the CRE during a toxic gas event. Isolation mode is initiated automatically when toxic gas is detected in the outside air intakes.

In the normal operation mode, the MCR HVAC system draws in outside air through either of the two tornado-generated missile protection grids and the tornado depressurization protection dampers. Incoming air is directed to any two of the four 50% capacity MCR air handling units. One of the two 100% capacity MCR toilet/kitchen exhaust fans exhaust a portion of the air supplied to the MCR to the outside, while the majority of MCR ventilation airflow recirculates. Figure 6.4-2 shows the air flow path in the normal operating mode. Normal operation of the MCR HVAC system is discussed in Chapter 9, subsection 9.4.1.

The emergency pressurization mode establishes a CRE pressure higher than that of adjacent areas. For automatic initiation in emergency pressurization mode, a portion of the return air flow is directed into the emergency filtration units. Outside air is drawn in through either of the two tornado-generated missile protection grids and the tornado depressurization protection dampers, and is directed to both 100% capacity MCR emergency filtration units and all 50% capacity MCR air handling units. The MCR smoke purge fan and the MCR toilet/kitchen exhaust fans are shut down and isolated. With pressurization mode established, the MCR operators may stop one MCR emergency filtration unit and two MCR air handling units and place them in standby. Figure 6.4-3 shows the air flow path in the emergency pressurization mode.

The emergency isolation mode establishes full recirculation, without outside air. In emergency isolation mode, outside air intake isolation dampers isolate and return air is directed to all 50% capacity MCR air handling units. The MCR smoke purge fan and the

MCR toilet/kitchen exhaust fans are shut down and isolated. With isolation mode established, the MCR operators can stop two MCR air handling units and place them in standby. Figure 6.4-4 shows the air flow path in the emergency isolation mode.

6.4.2.1 Definition of Control Room Envelope

The CRE is the plant area at elevation 25 ft. - 3 in. located in the reactor building adjacent to the turbine building, which in the event of an emergency can be isolated from the plant areas and the environment external to the CRE. Actual MCR floor elevation is 26 ft. - 11 in. to accommodate the cable spreading area under the floor. The CRE is served by the MCR HVAC system, which maintains the habitability of the MCR. This area encompasses the following rooms, offices, and areas, as shown in Figure 6.4-1:

- MCR
- Shift supervisor's office
- Clerk's office
- Tagging room
- Operator's area
- Kitchen
- Toilet facilities

These areas may be continuously and frequently occupied by operations personnel during emergencies.

Figure 6.4-1 shows CRE layout, doors, corridors, shield walls and placement/type of equipment. See Figures 7.1-2 and 7.1-3 for additional detail of equipment and materials for which the control room operator may require access during an emergency. Materials such as plant information (e.g., drawings), logs and procedures are kept in the control room computers.

6.4.2.2 Ventilation System Design

Figure 6.4-2 shows the MCR HVAC system in normal operation mode. During normal operation mode, the MCR air handling units are in operation with the MCR emergency filtration units in standby. Two of the 50% capacity air handling units operate, while the other two units act as standby and one of the 100% capacity MCR toilet/kitchen exhaust fan operates.

Figure 6.4-3 shows the MCR HVAC system emergency pressurization mode, with outside air taken in via the MCR emergency filtration unit air intake damper. The emergency pressurization mode restricts intrusion of contaminated air and maintains a positive pressure in the CRE to minimize contamination.

The CRE is pressurized as follows:

- MCR toilet/kitchen exhaust line isolation dampers and MCR smoke purge line isolation dampers revert to the closed position or remain in the closed position
- MCR toilet/kitchen exhaust fans and smoke purge fan automatically shutdown or remain in the shutdown condition
- The operating MCR air handling units continue to run and the standby MCR air handling units start
- MCR emergency filtration units automatically start and their respective MCR air intake isolation dampers will open
- The energized emergency filtration units continue to run to remove the airborne radioactive material from the CRE ambient air prior to circulation back to the CRE through the operating air handling units

With full flow established, the MCR operator may stop one MCR emergency filtration unit and two MCR air handling units and place them in standby. Depending on the point of origin of the release, the MCR operator may select the MCR emergency filtration unit that would minimize exposure to the CRE. Each MCR emergency filtration unit has a dedicated intake duct, either Plant East or Plant West, as shown in Figure 6.4-5.

Figure 6.4-4 shows the MCR HVAC system emergency isolation mode. This mode establishes full recirculation, isolated from outside air. This mode is automatically initiated by the detection of toxic material or smoke in the outside air intake.

With full recirculation flow established, the MCR operator may manually secure two of the 50% capacity MCR air handling units and place in standby.

The CRE air is recirculated as follows:

- All outside air intake isolation dampers close
- All MCR air handling units energize
- Smoke purge fan stops or remains in the shutdown condition and isolates
- MCR toilet/kitchen exhaust fan stops and isolates

The MCR HVAC system plan and sectional views are shown in Figure 6.4-5 and Figure 6.4-6. Locations of potential radiological releases are provided in subsection 15A.1.5 and Figure 15A-1. The COL Applicant is responsible to provide details of specific chemicals, their amounts, on site storage description, type of supply container (e.g., bottle, tank), and the type of connection (e.g., pipe, armored hose) to the system serviced; and the location of toxic gas releases and distance from the MCR and the MCR HVAC system intakes.

6.4.2.2.1 Main Control Room Emergency Filtration Unit

The two 100% capacity MCR emergency filtration units consist of the electrical heating coils, high efficiency filters, high-efficiency particulate air (HEPA) filters, and charcoal adsorbers. The HEPA and charcoal adsorber remove the radioactive materials. The electrical heating coils are powered from Class-1E power supplies to maintain the relative humidity below 70% for the purpose of ensuring the efficiency of the charcoal adsorbers. High efficiency filters are installed as a prefilter and afterfilter. The prefilter removes the larger airborne particulate from the air stream and prevents excessive loading of the HEPA filter. The afterfilter prevents carbon fines from being carried with the air flow to the CRE. The electrical heating coils are interlocked with the MCR emergency filtration unit fan to prevent burnout of the electrical elements due to low flow. The charcoal adsorber bed consists of impregnated activated carbon, and is installed to remove gaseous iodine from the air stream. Two MCR emergency filtration units, in parallel, are provided for single failure considerations. The MCR emergency filtration units are Equipment Class 3, Seismic Category I components located on the 50 ft – 2 in. elevation in the reactor building. Table 6.4-1 presents equipment specifications for the MCR emergency filtration units.

The filter section of each MCR emergency filtration unit contains, in airflow order:

- A high-efficiency prefilter
- An electric heating coil
- A HEPA filter
- Charcoal adsorber
- A high-efficiency afterfilter

Table 6.4-2 presents design features and fission product removal capabilities of the MCR emergency filtration system, compared to RG 1.52 recommendations (Ref. 6.4-2).

6.4.2.2.2 MCR Emergency Filtration Unit Fan

The two 100% capacity MCR emergency filtration unit fans are designed to provide flow through the MCR emergency filtration units for the removal of radioactive material and to maintain a positive pressure in the CRE in the pressurization mode with a single fan. Two 100% capacity fans are installed for single failure considerations. The MCR emergency filtration unit fans are powered from Class-1E power supplies.

The two MCR emergency filtration unit fans initiate on the receipt of a MCR isolation signal. The MCR emergency filtration unit fans are Equipment Class 3, Seismic Category I components. Table 6.4-1 presents equipment specifications for the MCR emergency filtration unit fan.

6.4.2.2.3 Isolation Dampers

MCR Air Intake Isolation Dampers:

- Two motor-operated air-tight dampers are installed in series in the outside air intake of the MCR HVAC system. These dampers close on the receipt of toxic gas signal. These dampers are installed at the air intake duct of the MCR HVAC system.

MCR Toilet/Kitchen Exhaust Line Isolation Dampers:

- Two air-operated air-tight dampers are interlocked with the MCR toilet/kitchen exhaust fans and are installed at the inlet side of the MCR toilet/kitchen exhaust fans. These dampers isolate on the receipt of toxic gas or MCR isolation signal. The two dampers are in series for single failure considerations.

MCR Smoke Purge Line Isolation Dampers:

- Two air-operated air-tight dampers are interlocked with the MCR smoke purge fan and are installed at the inlet side of the MCR smoke purge fan. These dampers isolate on the receipt of toxic gas or MCR isolation signal. The two dampers are in series for single failure considerations.

MCR Emergency Filtration Unit Air Intake Damper:

- One motor-operated damper is installed in the duct between the outside air intake and the inlet side of each MCR emergency filtration unit. This damper sets the makeup air flow rate during pressurization mode.

MCR Emergency Filtration Unit Air Return Damper:

- One motor-operated damper is installed in the duct between the recirculation duct and the inlet side of each MCR emergency filtration unit. This damper sets the return air flow rate directed to the emergency filtration unit during pressurization mode.

The above mentioned isolation dampers are Equipment Class 3, Seismic Category I components.

Additional isolation dampers of the MCR HVAC system are described in Chapter 9, subsection 9.4.1.

6.4.2.3 Leaktightness

The potential leak paths of the CRE are cable, pipe, and ducting penetrations, doors, and HVAC equipment. Total system leakage in pressurization mode is less than 120 ft^3/min (0.05 volume changes of the CRE per hour). Air exchange in pressurization mode is less than 1,200 ft^3/min (0.5 volume changes of the CRE per hour).

System flow balancing and leakage tests are performed during the initial test program, as described in Chapter 14. The leakage tests establish ex-filtration and infiltration rates to determine the MCR and emergency CRE flow balance necessary to achieve design pressure with respect to surrounding areas, in accordance with ASTM E741-00 (Ref. 6.4-3). The ASTM E741 tests confirm total system leakage (~120 ft^3/min) in the pressurization mode and air exchange rate (~1,200 ft^3/min) in the pressurization mode.

6.4.2.4 Interaction with Other Zones and Pressure-Containing Equipment

A positive ventilation pressure is established at each CRE access when in the pressurization mode. This pressure reduces infiltration of potentially harmful CRE inleakage by maintaining an outward ventilation flow from the CRE.

Other HVAC systems service areas adjacent to, above and below the CRE, however, no portion of this system is connected to or passes through the CRE. There is no adverse interaction associated with operation of this system. The MCR toilet/kitchen exhaust fans and the smoke purge fan provide service to the CRE. This potential system interaction is prevented since the fan motors are de-energized, and associated CRE isolation boundary dampers are closed, when the emergency CRE ventilation flow is automatically initiated. Any potential leak paths are addressed in subsection 6.4.2.3. There are no pressure-containing tanks or piping systems in the CRE that could, on failure, transfer or introduce hazardous material into the CRE (with the exception of installed gaseous fire suppression in the cable spreading area below the floor).

6.4.2.5 Shielding Design

The MCR shielding design requirements are based on the design basis accident analyses. Chapter 15 analyzes a broad array of accidents, including source term determinations and dose evaluations for the control room operators. The associated shielding requirements and designs are discussed in Chapter 12, Section 12.3, which also includes applicable plant arrangement drawings.

The design of the control room envelope shielding is based on the sources identified in Table 6.4-3. The distribution on the LOCA sources outside the control room is shown in Figure 6.4-7. Shielding thicknesses for the control room are described in Chapter 12, subsection 12.3.

6.4.3 System Operational Procedures

The normal and emergency operation of the MCR HVAC system is described in subsection 6.4.2. Smoke purge operation cannot be initiated during MCR emergency filtration system operation.

The COL Applicant is responsible to prepare and implement normal, surveillance, abnormal, and emergency operating procedures for the MCR HVAC system, to include the main control room emergency filtration system.

6.4.4 Design Evaluations

The design of the MCR habitability system has been evaluated for its capability and effectiveness in protecting against radiological and toxic gas release events.

6.4.4.1 Radiological Protection

Chapter 15, subsection 15.6.5 analyzes the DBA LOCA and presents the bounding radiological consequences. Chapter 15 concludes that the CRE structure, along with the MCR emergency filtration system, limits the maximum radiation dose to the CRE occupant to no more than 5 rem TEDE.

6.4.4.2 Toxic Gas Protection

A hazards analysis based on the recommendations of RG 1.78 (Ref. 6.4-4) is the responsibility of the COL Applicant. The analysis considers the materials listed on Table 1 of RG 1.78 for all materials expected to be used during routine US-APWR operations. The analysis considers storage quantities and locations, and the distance to MCR HVAC system intakes. The designated storage areas of hazardous chemicals as recommended by RG 1.78 are sited at distances greater than 330 feet from the MCR or the fresh air inlets shown in Figures 6.4-5 and 6.4-6.

6.4.5 Testing and Inspection

Chapter 14 describes the initial test program, which includes the pre-operational and startup testing. The pre-operational testing of the MCR HVAC system for inleakage is in accordance with ASTM E741-00 (Ref. 6.4-3). The MCR HVAC system and components are tested in accordance with ASME AG-1-2003 (Ref. 6.4-5). The MCR emergency filtration system trains and associated components are provided with the proper access for inspection. Inservice test program requirements, including inleakage testing, are the responsibility of the COL Applicant, and are addressed in the plant Technical Specifications (Chapter 16).

6.4.6 Instrumentation Requirement

Redundant, safety-related radiation monitors and toxic gas monitors are located in both MCR HVAC system outside air intakes. These monitors are powered from their respective Class-1E electrical supply sources.

Instrumentation for monitoring and controlling the MCR emergency filtration units meets the requirements of RG 1.52 (Ref. 6.4-2) and is shown in Figure 6.4-2, Figure 6.4-3 and Figure 6.4-4. The controls and indications associated with the MCR emergency filtration system are provided in Chapter 9, subsection 9.4.1. Chapter 7, Section 7.3 describes actuation and control logic and associated power supplies for the system.

The number/locations/sensitivity/range/type/design of the toxic gas detectors are COL items. Dependent on proximity to nearby industrial, transportation, and military facilities, and the nature of the activities in the surrounding area, as well as specific chemicals

onsite, the COL Applicant is responsible to specify the toxic gas detection requirements necessary to protect the CRE.

6.4.7 Combined License Information

Any utility that references the US-APWR design for construction and Licensed operation is responsible for the following COL items:

COL 6.4(1) The COL Applicant is responsible to provide details of specific chemicals, their amounts, on site storage description, type of supply container (e.g., bottle, tank), and the type of connection (e.g., pipe, armored hose) to the system serviced; and the location of toxic gas releases and distance from the MCR and the MCR HVAC system intakes.

COL 6.4(2) The COL Applicant is responsible to prepare and implement normal, surveillance, abnormal, and emergency operating procedures for the MCR HVAC system, to include the main control room emergency filtration system.

COL 6.4(3) Inservice test program requirements, including inleakage testing, are the responsibility of any COL Applicant selecting the US-APWR for construction and licensed operation, and are addressed in plant Technical Specifications (Chapter 16).

COL 6.4(4) The COL Applicant is responsible to determine the charcoal adsorber weight, type and distribution.

COL 6.4(5) A hazards analysis based on the recommendations of RG 1.78 (Ref. 6.4-4) is the responsibility of the COL Applicant.

6.4.8 References

6.4-1 General Design Criteria for Nuclear Power Plants, Title 10, Code of Federal Regulations, 10 CFR 50 Appendix A, January 2007 Edition.

6.4-2 U.S. Nuclear Regulatory Commission, Design, Inspection, and Testing Criteria for Air Filtration and Adsorption Units of Post-Accident Engineered-Safety-Feature Atmosphere Cleanup Systems in Light-Water-Cooled Nuclear Power Plants, Regulatory Guide 1.52, Rev. 3, June 2001.

6.4-3 American Society for Testing and Materials, Standard Test Method for Determining Air Change in a Single Zone by Means of a Tracer Gas Dilution, ASTM E 741-00 (Reapproved 2006).

6.4-4 U.S. Nuclear Regulatory Commission, Evaluating the Habitability of a Nuclear Power Plant Control Room During a Postulated Hazardous Chemical Release, Regulatory Guide 1.78, Rev. 1, December 2001.

6.4-5 Code on Nuclear Air and Gas Treatment, American Society of Mechanical Engineers, ASME AG-1-2003, September 2003.

6.4-6 U.S. Nuclear Regulatory Commission, Alternative Radiological Source Terms for Evaluating Design Basis Accidents at Nuclear Power Reactors, Regulatory Guide 1.183, July 2000.

6.4-7 U.S. Nuclear Regulatory Commission, Information Relevant to Ensuring that Occupational Radiation Exposures at Nuclear Power Stations Will Be as Low as Is Reasonably Achievable, Regulatory Guide 8.8, Rev. 3, June 1978.

Table 6.4-1 Main Control Room Emergency Filtration System - Equipment Specifications

Description	Specification
1. Main Control Room Emergency Filtration Units	
Auxiliaries	High efficiency prefilter, Electric heating coil, HEPA filter, Charcoal adsorber, High efficiency afterfilter
Quantity	2 (100% capacity) trains
Electric Heating Coil Capacity	18.0 kW
Charcoal Iodine Removal Efficiency	95% minimum
HEPA particulate removal efficiency	99% minimum
HEPA Filter Type	No. Designation 8 (Table FC-4110, ASME AG-1, based on 2,000 scfm*)
2. Main Control Room Emergency Filtration Unit Fans	
Quantity	2 (1 per Train)
Type	Centrifugal
Design Air Flow Rate	3,600 ft^3/min
3. Main Control Room HVAC System Isolation Dampers	
Type	Leak-tight Damper, Motor-Operated or Air-Operated
Closure Time	Less than or equal to 10 seconds

Note:

* Cubic foot of air per minute with a standard density.

Table 6.4-2 Emergency Control Room Envelope Ventilation – Comparison to Regulatory Guide 1.52 (Sheet 1 of 5)

No.	Regulatory Position Summary	US-APWR Design
2.	Environmental Design Criteria	
2.1	Design (including fan) based on the anticipated range of the LOCA and post-LOCA operating temperature, pressure, relative humidity, radiation levels, airborne iodine, and site toxic gas	Accident analysis (event duration), ventilation intake location, site conditions (chi/Q), and site toxic gases and storage locations to be considered
2.2	Location and layout consider radiation dose to essential personnel, and ESFs and services in the vicinity	Separation criteria (including shielding and access control) are addressed, including EQ considerations
2.2a	Source term to RG 1.3, 1.4, 1.25, or 1.183	Source term to RG 1.183 (Ref. 6.4-6)
2.3	Adsorber design based on concentration and relative abundance of the iodine species (elemental, particulate, and organic), and site toxic gases	Adsorber design is in accordance with ASME AG-1-2003 (Ref. 6.4-5)
2.4	Operation should not degrade operation of other ESFs; operation of other should not degrade MCR HVAC system operation	Separation criteria applied to system trains and other ESF trains
2.5	Design should consider both lowest and highest post-LOCA CRE area temperature	Maintain CRE temperature between 73 – 78°F
2.6	Design should consider any significant contaminants that may occur during a LOCA, such as dusts, chemicals, excessive moisture, or other particulate matter that could degrade system operation	System design considers post-LOCA release, moisture and toxic chemicals
3.	System Design Criteria	
3.1	Redundant trains of a typical commercial nuclear power plant design	System has two, 100% capacity redundant trains
3.2	Physical separation of trains, with missile protection	Separation criteria and missile protection employed
3.3	Component protection from LOCA pressure surges, if necessary	N/A

Table 6.4-2 Emergency Control Room Envelope Ventilation – Comparison to Regulatory Guide 1.52 (Sheet 2 of 5)

No.	Regulatory Position	US-APWR Design
3.4	Seismic Category I (RG 1.29) if system failure could lead to a release that exceeds the regulatory limit	Main Control Room Emergency filtration units and fans designed to seismic Category I
3.5	Environmental design basis includes containment spray additive	N/A
3.6	Train volumetric air flow should not exceed 30,000 ft^3/min each	Train volumetric air flow rate (filter unit and fan) is 3,600 ft^3/min each
3.6a	Charcoal adsorber residence time should be approximately 0.25 seconds per 2 in. of activated carbon or longer (see 4.11, below)	Charcoal adsorber residence time is approximately 0.25 seconds per 2 inches in accordance with ASME AG-1.
3.7	Flow rate and differential pressure indicated, alarmed and recorded in MCR	Main Control Room Emergency Filtration Unit fan low flow alarmed (both trains) in MCR, differential pressure across each filter (prefilter, HEPA, and afterfilter) indicated locally, and CRE pressure stored in the process computer during emergency CRE ventilation
3.8	RGs 1.30, 1.100, and 1.118, and IEEE 334 should be considered in design. Electrical supply and distribution design should be designed to RG 1.32. I&C should be designed to IEEE Std 603-1991, and EQ qualified and tested by RG 1.89	Applicable to US-APWR design.
3.9	Automatic actuation by redundant LOCA signals	System is automatically initiated by main control room isolation signals or when toxic material is detected. Signals are fully redundant.
3.10	Trains totally enclosed to control leakage and designed to facilitate inspection, maintenance (while precluding contamination), and testing to RG 8.8	Filtration units are totally enclosed and designed in accordance with RG 8.8 (Ref. 6.4-7)
3.11	Outdoor air intakes protected to minimize the effects of onsite, offsite, and environmental contaminates	Outside air intakes include tornado-generated missile protection grid and a tornado depressurization protection dampers

Table 6.4-2 Emergency Control Room Envelope Ventilation – Comparison to Regulatory Guide 1.52 (Sheet 3 of 5)

No.	Regulatory Position	US-APWR Design
3.12	Exhaust ductwork maximum leakage defined and test performed by Section SA-4500 of ASME AG-1-1997	Exhaust ductwork maximum leakage is defined by Section SA-4500 of ASME AG-1-2003.
3.12a	Exhaust ductwork maximum leakage test performed by Section TA of ASME AG-1-1997	Exhaust ductwork maximum leakage test performed by Section TA of ASME AG 1-2003
4.	Component Design Criteria and Qualification Testing	
4.0a	Components constructed and tested to Division II of ASME AG-1-1997, as modified and supplemented below:	Applicable to US-APWR design, including ASME AG 1-2003.
4.0b	Components designed to Division II of ASME AG-1-1997, as follows	
4.1-4.5	Components designed in accordance with ASME AG-1-1997	Applicable to US-APWR design, including ASME AG 1-2003.
4.1-4.5	Components constructed and tested to ASME AG-1-1997	Applicable to US-APWR design, including ASME AG 1-2003.
4.6	Filter and adsorber banks arranged in accordance with ERDA 76-21 and AG-1a-2000	Applicable to US-APWR design, including ASME AG 1-2003.
4.7	Filter housings, including floors and doors, designed to Section HA of ASME AG-1a-2000	Applicable to US-APWR design, including ASME AG 1-2003.
4.7a	Filter housings, including floors and doors, constructed to Section HA of ASME AG-1a-2000	Applicable to US-APWR design, including ASME AG 1-2003.
4.8	Drains designed to Section 4.5.8 of ERDA 76-21 and Section HA of ASME AG-1a-2000, with drain traps to preclude filter bypass through drain system	System normally isolated from MCR HVAC system. Heaters automatically energize to dry incoming air.
4.8a	Auxiliary Operator rounds checklist item to check water level	COL
4.9	Control relative humidity of incoming air to 70% or less	Automatic heaters designed to maintain relative humidity of incoming air to 70% or less

Table 6.4-2 Emergency Control Room Envelope Ventilation – Comparison to Regulatory Guide 1.52 (Sheet 4 of 5)

No.	Regulatory Position	US-APWR Design
4.10	Adsorbers should be designed to Section FD for Type II cells	Applicable to US-APWR design, including ASME AG 1-2003.
4.10a	Adsorbers should be constructed and tested to Section FD for Type II cells	Applicable to US-APWR design, including ASME AG 1-2003.
4.10b	Adsorber cooling (including safe, reliable manual, or automatic fire protection detection and spray) should be single-failure proof	Each filtration unit has an installed a manual fire protection spray.
4.10c	Fire protection should be hard-piped, have adequate coverage by adequate, and a reliable water source	See subsection 9.5.1
4.11	Adsorber should meet Section FF-5000 of ASME AG-1-1997	Applicable to US-APWR design, including ASME AG 1-2003.
4.11a	Purchase specification should include suitable qualification test	Applicable to US-APWR design, including ASME AG 1-2003.
4.11b	Charcoal adsorber average residence time should be approx. 0.25 seconds per 2 in. of activated carbon, or longer (see 3.6a, above), by Sections FD and FE of ASME AG-1-1997	Applicable to US-APWR design, including ASME AG 1-2003.
4.11c	Adsorber design maximum loading to 2.5 milligram (mg) total iodine per gram	Applicable to US-APWR design, including ASME AG 1-2003. The COL Applicant is responsible to determine the charcoal adsorber weight, type and distribution
4.11d	Adsorber impregnate maximum 5%	Applicable to US-APWR design, including ASME AG 1-2003.
4.11e	Sample canisters, if used, designed to App. A of ASME N509-1989	Applicable to US-APWR design, including ASME AG 1-2003.
4.12	Ducts and housings constructed for free and clean access and air flow, with minimum “hide out”	Applicable to US-APWR design, including ASME AG 1-2003.
4.13	Dampers designed to Sect DA of ASME AG-1-1997	Applicable to US-APWR design, including ASME AG 1-2003.
4.14	Fan, mounting and ductwork connections designed to Section BA (blowers) and SA (ducts) of ASME AG-1-1997	Applicable to US-APWR design, including ASME AG 1-2003.

Table 6.4-2 Emergency Control Room Envelope Ventilation – Comparison to Regulatory Guide 1.52 (Sheet 5 of 5)

No.	Regulatory Position	US-APWR Design
4.14a	Fan, mounting and ductwork connections constructed and tested to Section BA (blowers) and SA (ducts) of ASME AG-1-1997	Applicable to US-APWR design, including ASME AG 1-2003.
4.14b	Ductwork designed to Section SA of ASME AG-1-1997	Applicable to US-APWR design, including ASME AG 1-2003.
4.14c	Ductwork constructed and tested to Section SA of ASME AG-1-1997	Applicable to US-APWR design, including ASME AG 1-2003.
5.	Maintainability Criteria	
5.0	Maintenance design provisions to Section 4.8 of ASME N509-1989, and Section HA of ASME AG-1-a-2000	Applicable to US-APWR design, including ASME AG 1-2003.
5.1	Maintenance accessibility design to Section 2.3.8 of ERDA 76-21 and Section HA of ASME AG-1a-2000	Applicable to US-APWR design, including ASME AG 1-2003.
5.1a	Design should include minimum 3 ft between bank mounting frames	Applicable to US-APWR design, including ASME AG 1-2003.
5.1b	Design should include maximum dimension plus at least 3 ft clearance for component replacement	Applicable to US-APWR design, including ASME AG 1-2003.
5.2	Air cleanup components operated during Construction phase replaced before Initial Test Program (Chapter 14)	Applicable to US-APWR design, including ASME AG 1-2003.
6	In-Place Testing Criteria	Applicable to US-APWR design, including ASME AG 1-2003.
7	Laboratory Testing Criteria for Activated Carbon	Applicable to US-APWR design, including ASME AG 1-2003.

Table 6.4-3 Description of Radiation Shielding for the Control Room in a LOCA (Sheet 1 of 2)

Item	Principal Assumptions			
Radiation Source Origin	Containment	Radioactive Plume	Main Control Room Filters	Main Control Room
Radiation Source Strength	See Figure 6.4-7	See Figure 6.4-7	See Figure 6.4-7	See Figure 6.4-7
Radiation Source Geometry	Cylindrical Geometry	Line Source	Point Source	Finite Cloud Geometry
Radiation Source Type	Gamma rays	Gamma rays	Gamma rays	Gamma rays and Beta rays
Radiation Source Energy	Gamma rays are divided into 25 energy groups			N/A
Dose Conversion Factors	Based on ICRP Publication 51			Based on Federal Guidance Report 11 and 12
Shielding Thickness of the Main Control Room	Containment shield: 4 ft. - 4in. Main control room shield: 3ft. - 4 in.	Main control room shield: 3ft. - 4 in.	Main control room shield: 3ft. - 4 in.	N/A
Distance from Radiation Source to the Main Control Room	Approximately 95 ft.	Approximately 180 ft.	Approximately 16 ft.	N/A
Decay Consideration	Radioactive decay is taken into account.			

Table 6.4-3 Description of Radiation Shielding for the Control Room in a LOCA (Sheet 2 of 2)

Item	Principal Assumptions
Radiation Streaming at Penetration of the Main Control Room	As to inside of the containment that has the strongest source of radiation, the penetration area wall alone is taken into account as shield body because of pipe penetration between the containment and penetration area (Wall thickness of external shield body has been considered as typical model in the evaluation because wall thickness of the containment and penetration area are nearly the same). External wall thickness of penetration area is adjacent to the corridor used for access to the main control room. However, the main wall is designed not to be penetrated so that dose rate in the main control room and in the access corridor is designed to be lowest as much as possible. Therefore, exposure to operator due to streaming is designed to be lowered to the allowable level.
Isometric Drawing of the Main Control Room	See Figure 12.3-8

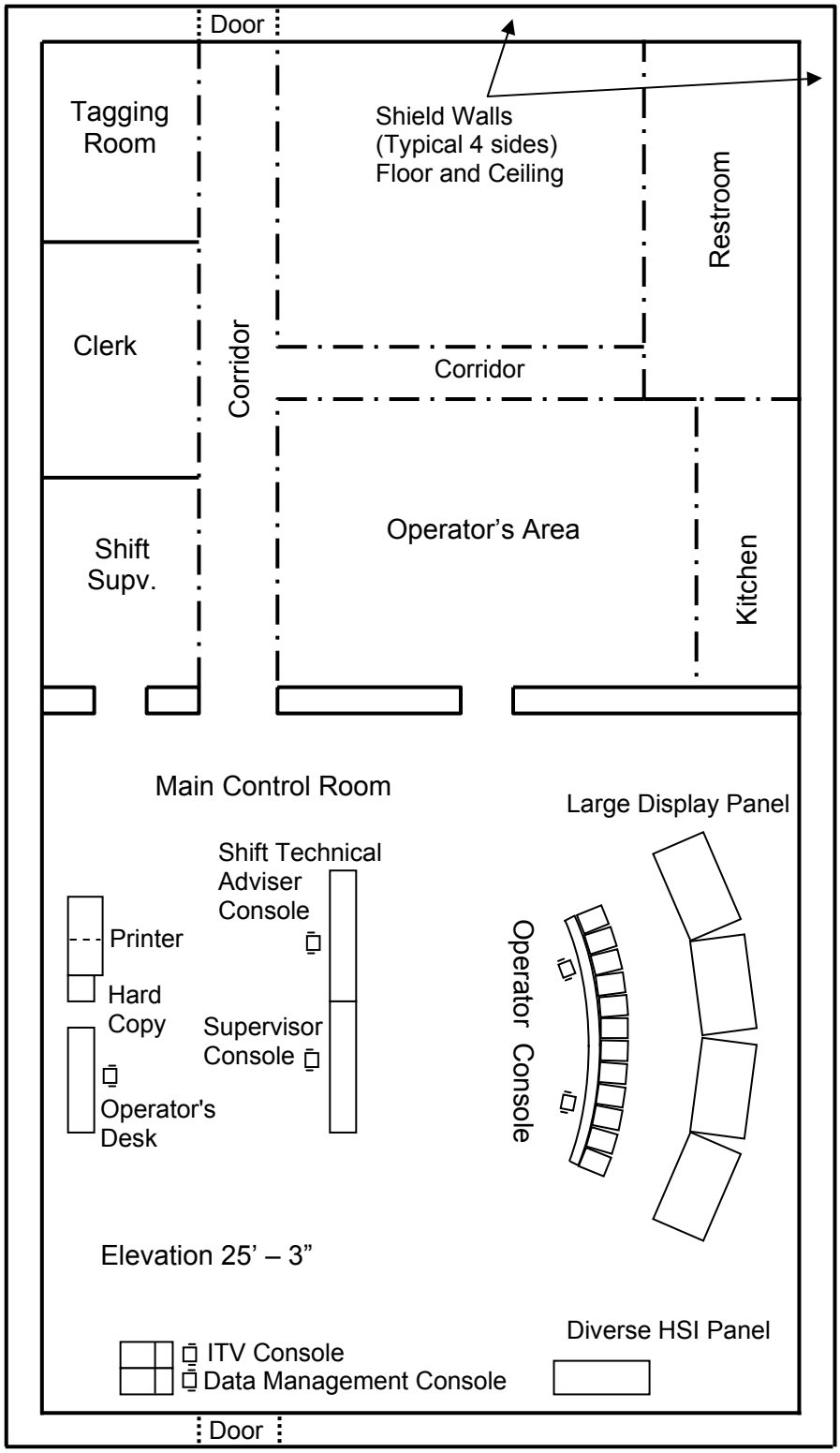

Figure 6.4-1 Main Control Room Envelope

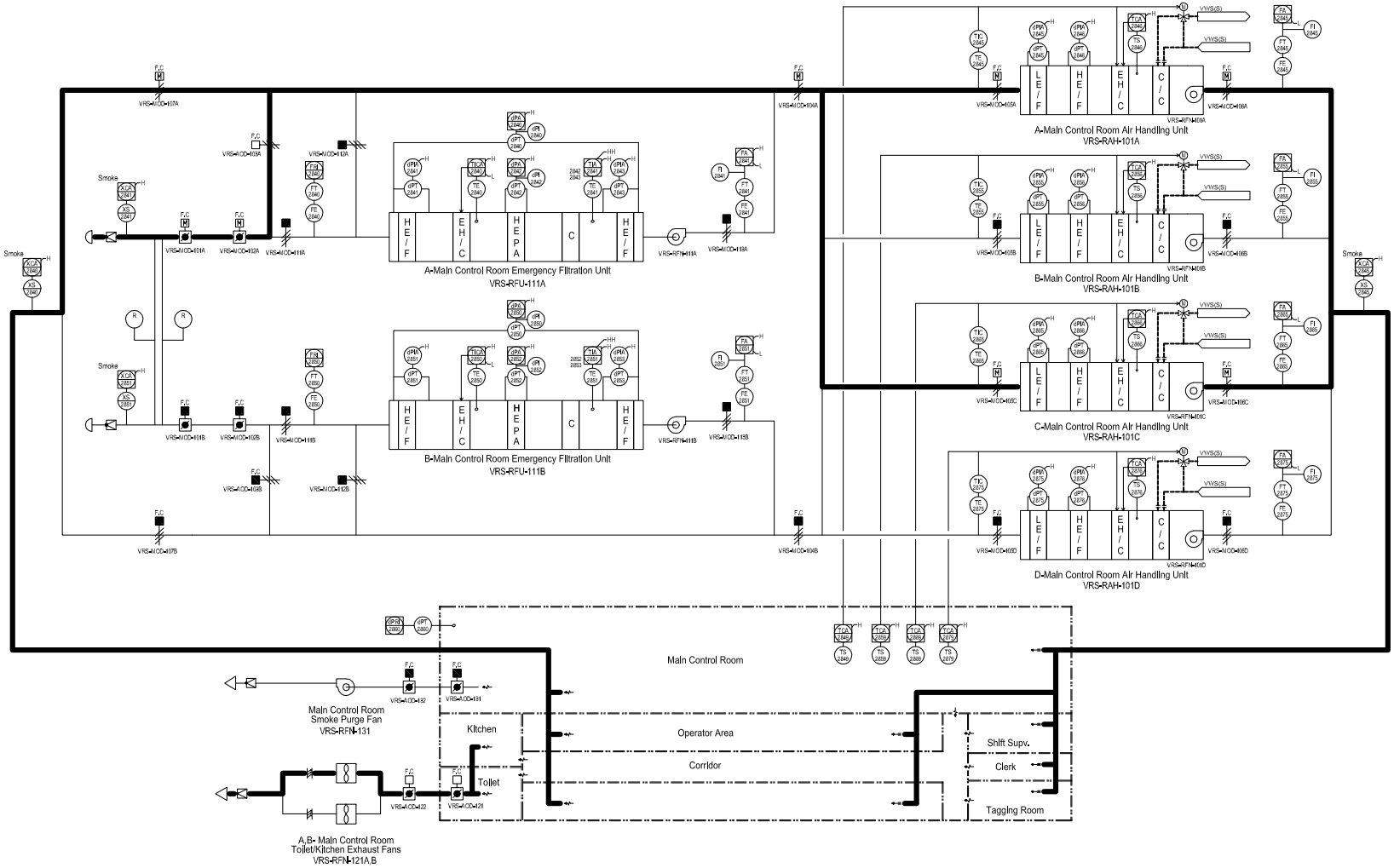

Figure 6.4-2 MCR HVAC System (Normal Operation Mode)

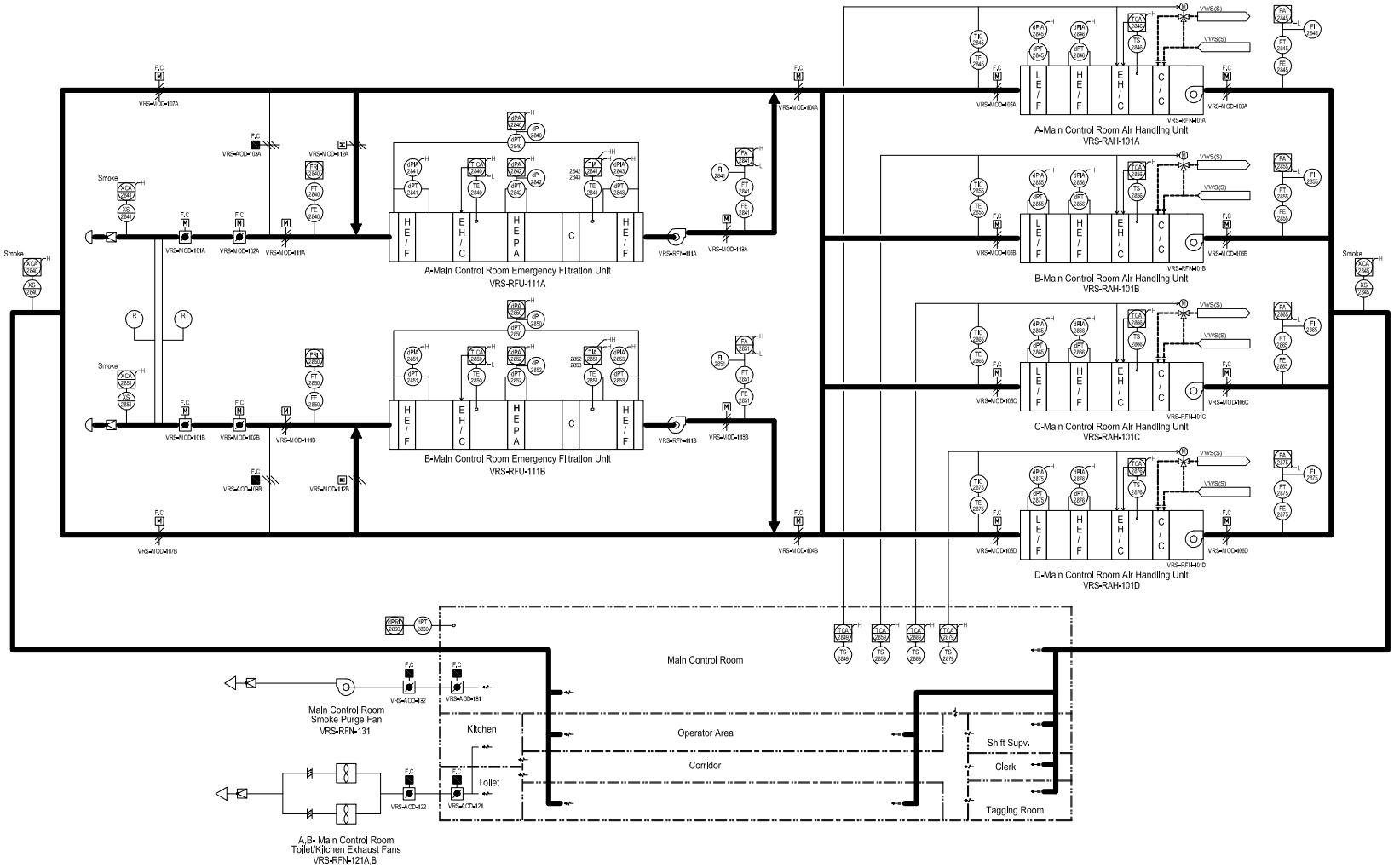

Figure 6.4-3 MCR HVAC System (Emergency Pressurization Mode)

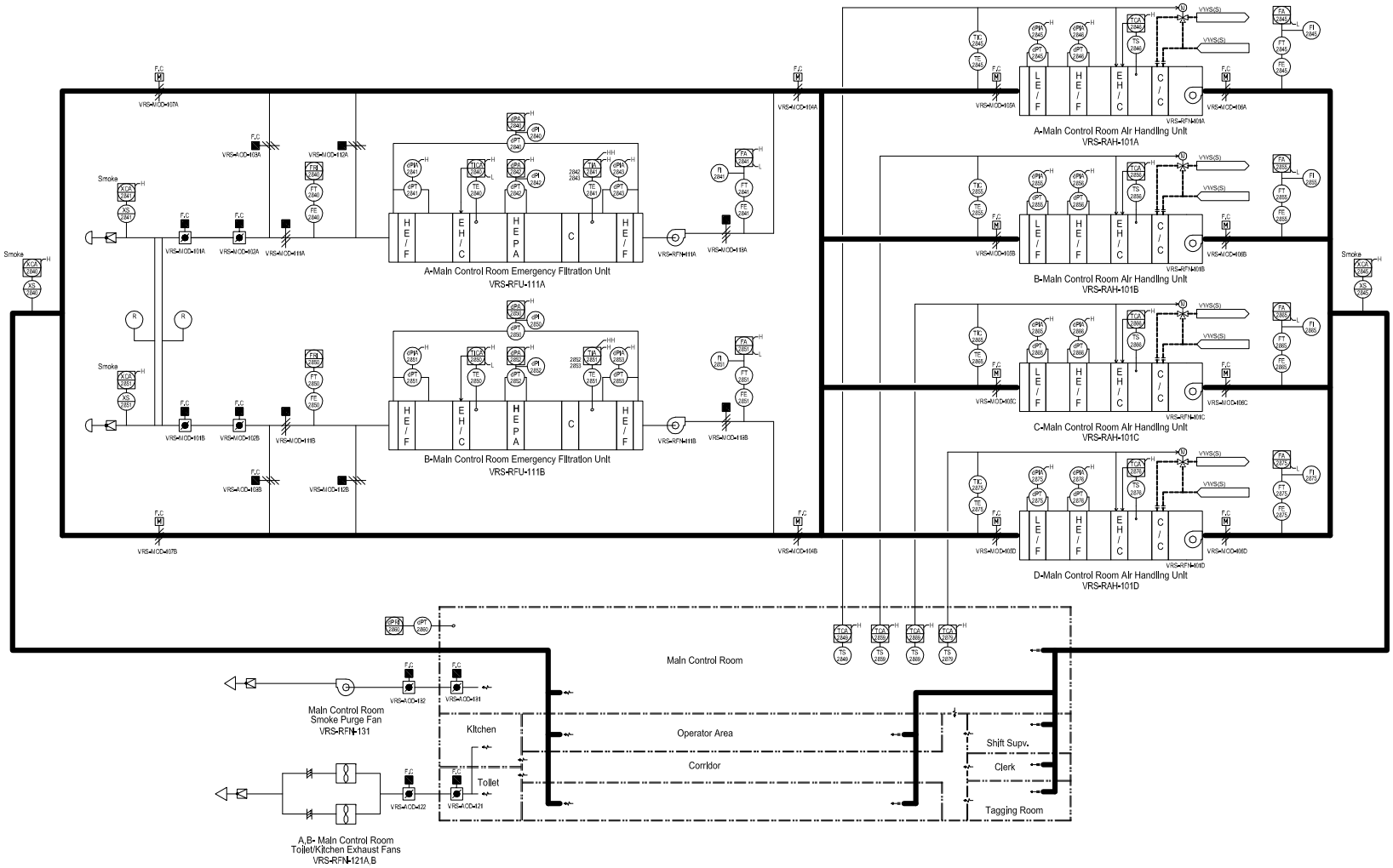

Figure 6.4-4 MCR HVAC System (Emergency Isolation Mode)

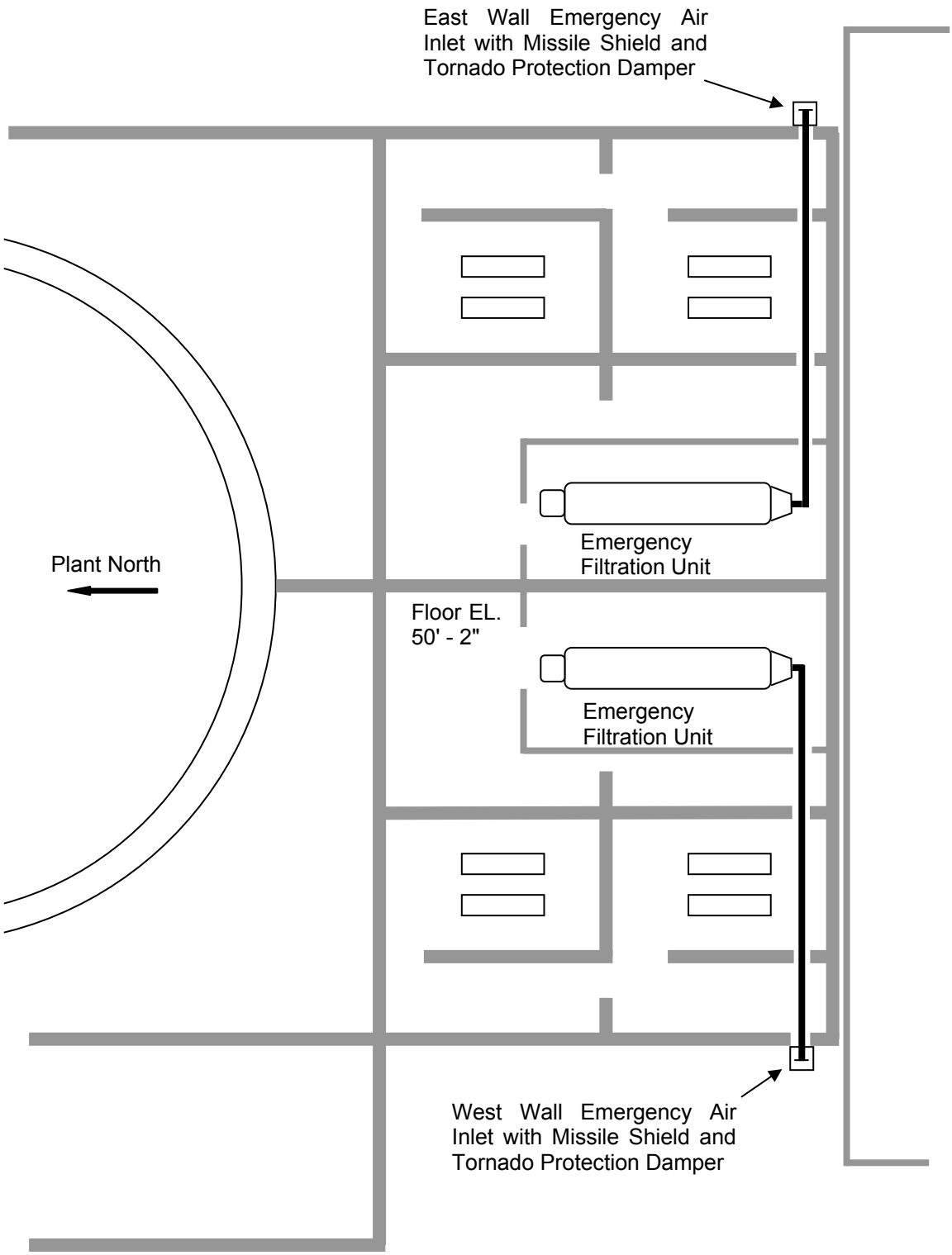

Figure 6.4-5 Emergency Control Room Envelope Ventilation System Plan View

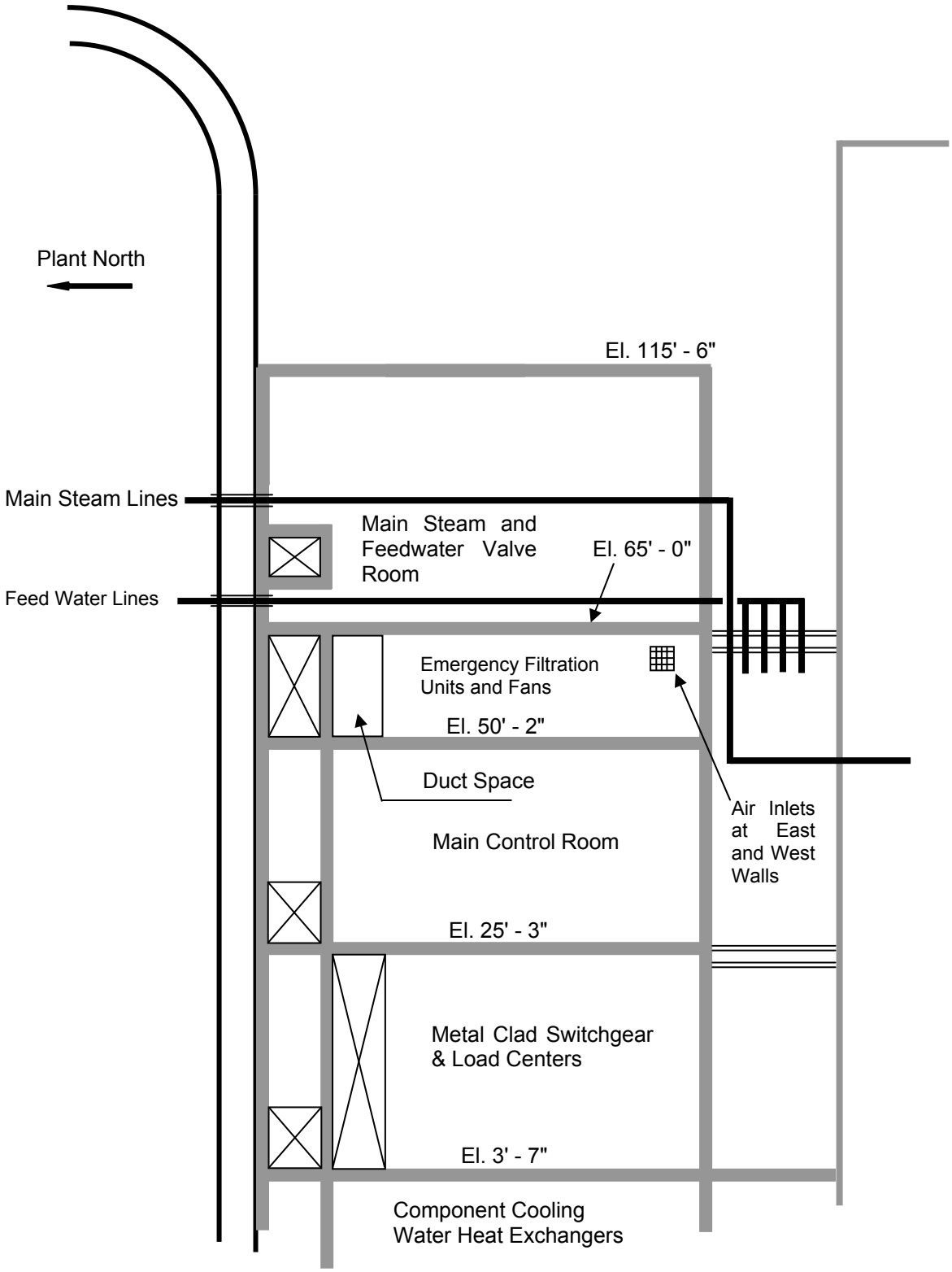

Figure 6.4-6 Emergency Control Room Envelope Ventilation System Sectional View

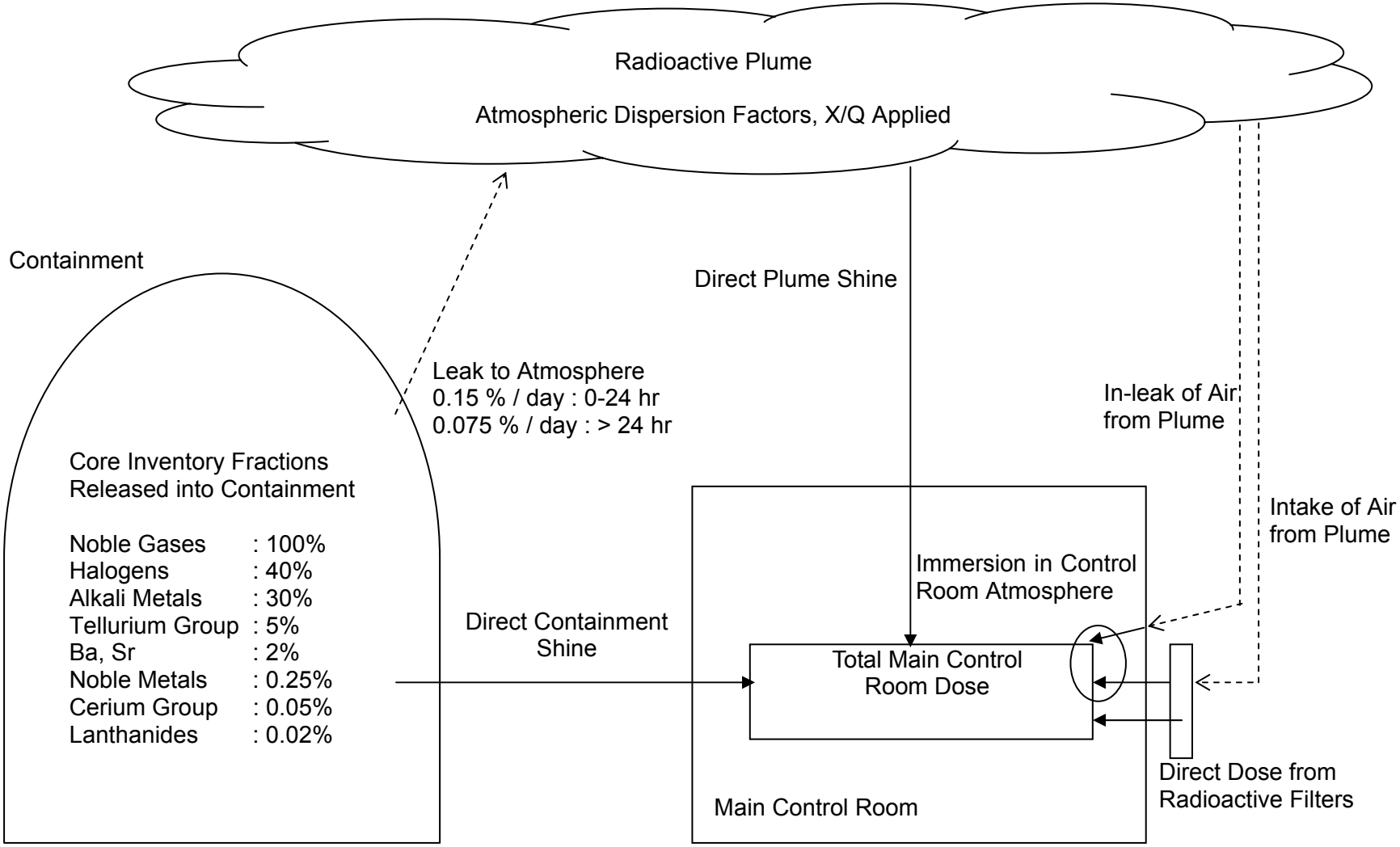

Figure 6.4-7 Diagrammatic Representation of Total Main Control Room LOCA Dose

6.5 Fission Product Removal and Control Systems

The fission product removal systems are ESFs that remove fission products that are released from the reactor core as a result of postulated accidents and become airborne. The containment controls the leakage of fission products from the containment to ensure that the leakage fraction that may reach the environment is below limits. The US-APWR fission product removal (three systems) and control (containment) systems are as follows:

- MCR HVAC system (includes the MCR emergency filtration system)
- Annulus emergency exhaust system
- Containment spray system
- Containment

The fission product removal effects under accident conditions are shown in Table 6.5-1.

The annulus emergency exhaust system is separate and distinct from the MCR HVAC system, which is described in Section 6.4 above. The containment spray system for containment cooling is described in subsection 6.2.2.

6.5.1 ESF Filter Systems

The annulus emergency exhaust system is one of the ESF filter systems and is designed for fission product removal and retention by filtering the air it exhausts from the following areas following accidents:

- Penetration areas
- Safeguard component areas

The penetration areas are located adjacent to the containment and include all piping and electrical penetration areas. The safeguard component areas are located adjacent to the containment and include ECCS components and CSS components that are installed outside of containment.

The annulus emergency exhaust system is automatically initiated by the ECCS actuation signal and is initiated manually during non-ECCS actuation events (e.g., rod cluster control assembly [RCCA] ejection accident or containment radiation level in excess of the normal operating range). This system establishes and maintains a negative pressure in the penetration areas and safeguard component areas relative to adjacent areas. Any airborne radioactive material in the penetration areas and safeguard component areas is directed to the annulus emergency exhaust system, avoiding an uncontrolled release to the environment.

Another ESF filter system is the MCR HVAC system that includes the MCR emergency filtration system described in Section 6.4 and Chapter 9, subsection 9.4.1. The annulus emergency exhaust system is also described in Chapter 9, subsection 9.4.5.

6.5.1.1 Design Bases

As described in Chapter 3, the annulus emergency exhaust system is designed to Equipment Class 2 and Seismic Category I requirements. Fan motors receive Class 1E power. The annulus emergency exhaust system is designed to establish a -1/4 inch water gauge (WG) pressure in the penetration areas and the safeguard component areas within 240 seconds to mitigate a potential leakage to the environment of fission products from the containment following a LOCA. The filtration units operate with at least 99% efficiency for particulate removal. Table 6.5-2 presents design bases and component specifications for the annulus emergency exhaust system.

6.5.1.2 System Design

Figure 6.5-1 is a flow diagram of the annulus emergency exhaust system, including ducting shared with the auxiliary building HVAC system. The annulus emergency exhaust system consists of two independent and redundant 100% trains, with each train containing a filtration unit and a filtration unit fan. As shown, each train is protected by normally closed outlet and exhaust dampers. These dampers block the auxiliary building HVAC system flow into each train during normal operation, thus preserving and extending the useful service life of the annulus air filtration media.

Each filtration unit contains, in airflow order:

- A high-efficiency prefilter
- A high-efficiency particulate air (HEPA) filter

The annulus emergency exhaust filtration unit fans direct flow to the vent stack.

The annulus emergency exhaust filtration unit fan in each train automatically starts on an ECCS actuation signal. The ECCS actuation signal also closes auxiliary building HVAC system isolation dampers as follows:

- Supply line to the penetration areas and safeguard component areas
- Exhaust line from the penetration areas and the safeguard component areas

In addition, the signal starting the annulus emergency exhaust filtration unit fans opens the corresponding outlet dampers and the exhaust dampers from the penetration areas and safeguard component areas.

The annulus emergency exhaust filtration unit fan is manually started by MCR operators if the containment radiation level exceeds the normal operating range. The following auxiliary building HVAC system isolation dampers are manually closed:

- Supply line to the penetration areas and the safeguard component areas
- Exhaust line from the penetration areas and the safeguard component areas

Table 6.5-3 presents design features and fission product removal capabilities of the annulus emergency exhaust system in accordance with the guidance in RG 1.52 (Ref. 6.5-1), "Design, Inspection, and Testing Criteria for Air Filtration and Adsorption Units of Post-Accident Engineered-Safety-Feature Atmosphere Cleanup Systems in Light-Water-Cooled Nuclear Power Plants" (Rev. 3, June 2001).

6.5.1.3 Equipment Description

Annulus Emergency Exhaust Filtration Unit

The two 100% capacity annulus emergency exhaust filtration units, arranged in parallel, consist of a high efficiency filter and HEPA filter. A High efficiency filter is installed as a prefilter. The prefilter removes the larger airborne particulate from the air stream and prevents excessive loading of the HEPA filter. The annulus emergency exhaust filtration units are Equipment Class 2, Seismic Category I components located in the reactor building.

Annulus Emergency Exhaust Filtration Unit Fan

The two 100% capacity annulus emergency exhaust filtration unit fans are designed to establish a negative pressure in the penetration and safeguard component areas, relative to adjacent areas subsequent to the onset of an accident condition. The annulus emergency exhaust filtration unit fans are started as follows:

- ECCS actuation signal starts both annulus emergency exhaust filtration unit fans
- If high radiation is detected in the containment, the main control room operator manually starts one annulus emergency exhaust filtration unit fan.

The annulus emergency exhaust filtration unit fans are powered from Class 1E power supplies.

The annulus emergency exhaust filtration unit fans are Equipment Class 2, Seismic Category I components located in the reactor building.

Penetration Area Supply and Exhaust Line Isolation Dampers

As shown in Figure 6.5-1, four supply and four exhaust line isolation dampers are normally open to provide ventilation and to maintain slightly negative pressure to the penetration areas during normal operation. These isolation dampers close upon the receipt of an ECCS actuation signal. Two isolation dampers are in series for single failure considerations. Further details on the auxiliary building HVAC system are provided in Chapter 9, subsection 9.4.3. The penetration area supply and exhaust line isolation dampers are Equipment Class 2, Seismic Category I components.

Safeguard Component Area Supply and Exhaust Line Isolation Dampers

As shown in Figure 6.5-1, eight supply and eight exhaust line isolation dampers are normally open to provide ventilation and to maintain slightly negative pressure to the four safeguard component areas during normal operation. These isolation dampers close upon the receipt of an ECCS actuation signal. Two isolation dampers are in series for each of the four safeguard component areas for single failure considerations. Further details on the auxiliary building HVAC system are provided in Chapter 9, subsection 9.4.3. The safeguard component area supply and exhaust line isolation dampers are Equipment Class 2, Seismic Category I components.

Annulus Emergency Exhaust Filtration Unit Outlet Damper

As shown in Figure 6.5-1, one motor-operated annulus emergency exhaust filtration unit outlet damper is installed at each fan outlet and interlocked with the annulus emergency exhaust filtration unit fan. These shutoff dampers open upon the receipt of an annulus emergency exhaust filtration unit fan run signal. The annulus emergency exhaust filtration unit outlet dampers are Equipment Class 2, Seismic Category I components. The annulus emergency exhaust filtration unit outlet damper is powered from Class 1E power supplies.

Safeguard Component Area Exhaust Damper

As shown in Figure 6.5-1, two safeguard component area exhaust motor-operated shutoff dampers are installed in parallel between the annulus emergency exhaust filtration unit fan inlet and the safeguard component area. These shutoff dampers open upon the receipt of an annulus emergency exhaust filtration unit fan run signal to maintain a negative pressure to the safeguard component areas during post-accident operation. The safeguard component area exhaust dampers are Equipment Class 2, Seismic Category I components. The safeguard component area exhaust dampers are powered from Class 1E power supplies.

Penetration Area Exhaust Damper

As shown in Figure 6.5-1, two penetration area exhaust motor-operated shutoff dampers are installed in parallel between the annulus emergency exhaust filtration unit and the penetration area exhaust header. These shutoff dampers open upon the receipt of an annulus emergency exhaust filtration unit fan run signal to maintain a negative pressure to the penetration areas during post-accident operation. The penetration area exhaust dampers are Equipment Class 2, Seismic Category I components. The penetration area exhaust dampers are powered from Class 1E power supplies.

6.5.1.4 Design Evaluation

Chapter 15, subsection 15.6.5 analyzes the DBA LOCA and presents the bounding radiological consequences. Chapter 15 concludes that the annulus emergency exhaust

system limits the maximum radiation dose to the exclusion area boundary (EAB) and low population zone (LPZ) occupant to less than 10CFR50.34 guidelines (Ref. 6.5-2).

Chapter 15 subsection 15.4.8 analyzes the DBA RCCA ejection accident and presents the bounding radiological consequence. Chapter 15 concludes that the annulus emergency exhaust system limits the maximum radiation dose to the EAB and low population zone (LPZ) to less than RG 1.183 guidelines (Ref. 6.5-3).

6.5.1.5 Tests and Inspections

The annulus emergency exhaust system and components are tested in accordance with ASME AG-1-2003 (Ref. 6.5-4).

6.5.1.5.1 Pre-operational Testing

The annulus emergency exhaust filtration units are acceptance tested in accordance with ASME N510-1989 (Ref. 6.5-5) in accordance with the guidance in RG 1.52 (Ref. 6.5-1).

Prefilters are tested in accordance with Section FB of ASME AG-1-2003 (Ref. 6.5-4). The HEPA filters are compatible with the chemical composition and physical conditions of the air stream. The HEPA filters are tested prior to installation for penetration using dioctyl phthalate (DOP) or an alternative agent that meets the guidance of RG 1.52 (Ref. 6.5-1) and have a minimum efficiency of 99%. The pre-installation test is performed in accordance with Section TA of ASME AG-1-2003 (Ref. 6.5-4). The HEPA filters are tested following installation in accordance with Section FC of ASME AG-1-2003 (Ref. 6.5-4).

Isolation and shutoff dampers are tested in accordance with Section DA of ASME AG-1-2003 (Ref. 6.5-4).

The annulus emergency exhaust filtration unit fan and its mounting is tested in accordance with Section BA of ASME AG-1-2003 (Ref. 6.5-4).

The annulus emergency exhaust system ductwork is tested in accordance with Section SA of ASME AG-1-2003 (Ref. 6.5-4).

6.5.1.5.2 Inservice Surveillance

Initial in-place testing of the annulus emergency exhaust system and components is performed in accordance with Section TA of ASME-AG-1-2003 (Ref. 6.5-4). The system is periodically tested in accordance with the inservice test program required by Chapter 16, “Technical Specifications.” Periodic in-place testing is performed in accordance with ASME N510-1989 (Ref. 6.5-5) as modified and supplemented by the following:

- A visual inspection is performed in accordance with Section 5 of ASME N510-1989 (Ref. 6.5-5)

- In-place aerosol leak tests are performed in accordance with Section 10 of ASME N510-1989 (Ref. 6.5-5) on the HEPA filters initially, periodically, after filter replacement (full or partial), after suspected water intrusion, and following painting, fire, or chemical release in any area served by the annulus emergency exhaust system if such a release may affect filter performance

6.5.1.6 Instrumentation Requirements

The ECCS actuation signal automatically actuates the annulus emergency exhaust system.

6.5.1.6.1 Radiation Monitors

Four area radiation monitors are located in containment. The containment radiation monitors detect high radiation and actuate an alarm in the MCR. Radiation monitoring is discussed in Chapter 12, subsection 12.3.4.

6.5.1.6.2 Flow Rate

The total combined flow rate from the penetration areas is stored by the process computer in the MCR. The annulus emergency exhaust filtration unit fan train A and train B outlet flow rate is also stored by the process computer.

The annulus emergency exhaust filtration unit fan outlet air high and low flow alarms are provided in the MCR.

6.5.1.6.3 Pressure

The pressure in the penetration areas and safeguard component areas are stored by the process computer in the MCR.

The differential pressure across the high efficiency filter and HEPA filter in each train is indicated locally and alarmed in the MCR.

6.5.1.7 Materials

The ESF filter system materials are specified to resist premature failure of the annulus emergency exhaust system or any other ESF system due to radiolytic and pyrolytic decomposition products. The COL Applicant is responsible to provide an as-built list of material used in or on the ESF filter systems by their commercial names, quantities (estimate where necessary), and chemical composition and show that the radiolytic or pyrolytic decomposition products, if any, of each material will not interfere with the safe operation of this or any other ESF.

6.5.2 Containment Spray Systems

The CSS is an automatically actuated, dual-function ESF; containment spray for heat removal as described in subsection 6.2.2, and containment spray for fission product removal and control, as discussed here. The CSS capacity is described in

subsection 6.2.2. This system mitigates the design basis accidents that release fission products into the containment as described in Chapter 15, "Transient and Accident Analyses."

6.5.2.1 Design Bases

The fission product removal feature of the containment spray system is accomplished by increasing the pH of the RWSP from its normal value of approximately 4.3, to a post-design basis accident pH of at least 7.0. The RWSP is the ESF source for borated water for containment spray and the ECCS; there is no automatic switchover to a borated ESF coolant source external to the containment.

Radioactive iodine is the primary concern in evaluating and mitigating the potential radiological consequences of a design basis accident. Without an outside agent to reduce precipitation, radioactive iodine deposit on components in the containment, or may leak from the containment. The containment spray enhances iodine retention over an extended time period to allow decay of the longest lived radioactive iodine isotope (Iodine-131, with half-life of 8 days).

The containment spray system is started as follows:

- In a design basis accident, elevated containment pressure actuates the containment spray system automatically
- If high radiation is detected in the containment, the MCR operator manually starts the containment spray function

Crystalline NaTB is used to raise the pH of the RWSP from 4.3 to at least 7.0, after containment spray actuation. Twenty three pre-positioned baskets of NaTB are stored in the amounts and at the locations shown in Figure 6.3-8. The NaTB baskets are discussed in Section 6.3. The basket locations ensure full wetting and dissolution of the NaTB.

CSS pumps, piping and valves are described in subsection 6.2.2.

Following a DBA, the containment pressure approaches atmospheric pressure. When the containment pressure is reduced sufficiently and the operator determines that containment spray is no longer required, the operator terminates containment spray.

6.5.2.2 System Design (for Fission Product Removal)

The RWSP contains 81,230 ft^3 of water borated to at least 4,000 ppm boron, resulting in a pH of approximately 4.3. Crystalline NaTB is stored in baskets at the operating level in containment. The chemical composition of NaTB is $Na_2B_4O_7 \cdot 10\ H_2O$. Section 6.1, "Engineered Safety System—Materials," provides additional information on this chemical and its compatibility with ESF materials in addition to those of the CSS.

As described in subsection 6.2.2, there are 348 containment spray nozzles arrayed in four spray rings positioned high in the containment. Figure 6.2.2-5 is a sectional view of

the containment showing the elevation of each spray ring (A, B, C, and D). Figure 6.2.2-6 presents the number and types of nozzles on each spray ring. Figure 6.2.2-6 also presents a plan view showing the location of each nozzle on each spray ring and the predicted spray coverage on the operating floor of the containment. The nozzle design and manufacturer, orientation, supply pressure, and array on the headers are commonly used in US nuclear power applications.

Approximately 60% of the containment net free volume is sprayed. Unsprayed regions include those areas covered by the containment structure (i.e., pressurizer subcompartment top cover). Table 6.5-4 presents a tabulation of the unsprayed volume in the containment. Significant natural convection mixing flow between sprayed and unsprayed regions is established by the large difference between the sprayed and the unsprayed percentages of the containment volume. Figures 6.3-10 and 6.3-11 shows the plan and sectional views of the spray distribution, coverage patterns, and spray trajectories for the NaTB baskets.

Operation of the CSS to remove fission products from containment is described in Chapter 15, subsection 15.6.5.5. The time of spray initiation and spray flow rate is also shown in Chapter 15, subsection 15.6.5.5.

6.5.2.3 Design Evaluation

Chapter 15, subsection 15.0.3 describes the iodine removal parameters for the US-APWR. Only two CSS trains are credited to mitigate the effects of a design basis accident that releases radioactive material into the containment. Chapter 15, subsection 15.6.5.5 describes the radiological consequence evaluation for the limiting design basis accident, including fission product removal, by the CSS. Chapter 15, subsection 15.0.3 contains information about the methods employed in this evaluation.

6.5.2.3.1 Elemental Iodine Removal by Spray

The iodine removal analysis assumes two 50% capacity containment spray trains are operating. The elemental iodine removal by spraying is negligible. Accordingly, no credit is taken for removal of elemental iodine by spray. No credit is taken for containment spray removal of noble gases or organic iodine.

The primary mechanism for removal of elemental iodine is by natural deposition on the containment wall and other objects in the containment. However, natural deposition is conservatively credited to occur only on the inside surface of the containment. A conservative natural deposition removal coefficient calculation is used based on NUREG-0800, SRP 6.5.2 (Ref. 6.5-6).

6.5.2.3.2 Particulate Iodine Removal by Spray

Particulate forms of iodine are removed by natural deposition. Particulate removal by natural deposition is credited in the unsprayed region of the containment. Removal of particulate iodine by natural deposition is determined based on the Powers model. The removal of particulate iodine in the sprayed region is calculated using the model

provided in NUREG-0800, SRP 6.5.2 (Ref. 6.5-6). Both models are presented in Chapter 15, subsection 15.0.3.

6.5.2.3.3 Iodine Decontamination Factor (DF)

The iodine DF is the maximum iodine concentration in the containment atmosphere divided by the concentration of iodine in the containment atmosphere at some time after decontamination. The DF is dependent on spray duration and an ongoing release of iodine from the design basis accident. Therefore, the DF is time dependent and the DF for the containment atmosphere achieved by the CSS is determined based on NUREG-0800, SRP 6.5.2 (Ref. 6.5-6). Credit for elemental iodine removal is assumed to continue until the DF of 200 is reached in the containment atmosphere.

6.5.2.4 Tests and Inspections

Pre-operational tests are performed to verify the following:

- An air test is performed to ensure the CSS piping and nozzles are free from obstructions
- Full flow CS/RHR pump tests are performed to verify that the CSS is capable of delivering the required design flow for efficient iodine removal

Chapter 14, subsection 14.2.12, of the Initial Test Program describes the testing that is performed to verify the capability of the CSS prior to unrestricted power operations. The COL Applicant is responsible for preparation and implementation of an initial test program and an inservice test program in accordance with ASME Code Section III for Class 2 and Class 3 systems and components.

Preservice and inservice examinations, tests, and inspections are performed in accordance with ASME Code Section XI as required in Section 6.6. Preserving access and inspectability for ASME Code Section III for Class 1 and Class 2 components is the responsibility of the COL Applicant.

Inservice testing of pumps, valves, and other components, including spray nozzle flow, is performed in accordance with Chapter 16, “Technical Specifications.”

6.5.2.5 Instrumentation Requirements

CSS instrumentation requirements are discussed in subsection 6.2.2.5.

6.5.2.6 Materials

Spray additives such as sodium hydroxide are not used in the US-APWR. NaTB is added to the RWSP via NaTB baskets. NaTB compatibility with ESF systems is described in subsection 6.1.1.2. The COL Applicant is responsible to provide surveillance test procedures (Chapter 16) for the containment pH adjustment.

6.5.3 Fission Product Control Systems

The US-APWR does not require a containment purge system. The removal of iodine and particulates by containment spray reduces fission product leakage to the environment below the guidelines. The analysis presented in Chapter 15 details the radiological consequences of the US-APWR design following a design basis accident that releases radioactive material into the containment. The inservice leakage rate test program detailed in subsection 6.2.6 monitors and protects the assumed containment leakage rate.

6.5.3.1 Primary Containment

The US-APWR containment consists of a prestressed, post-tensioned concrete structure described in Chapter 3, subsection 3.8.1. The US-APWR design does not include an ESF hydrogen purge system. The containment operations following a design basis accident that releases radioactive material into the containment are presented in Table 6.5-5.

6.5.3.2 Secondary Containments

The US-APWR design does not utilize a secondary containment. This subsection is not applicable to the US-APWR.

6.5.4 Ice Condenser as a Fission Product Cleanup System

The US-APWR containment is a prestressed, post-tensioned concrete structure described in subsection 3.8.1. The US-APWR design does not include an ice condenser-type containment design.

6.5.5 Pressure Suppression Pool as a Fission Product Cleanup System

The US-APWR containment is a prestressed, post-tensioned concrete structure described in subsection 3.8.1. The US-APWR design is not a pressure suppression pool-type containment design.

6.5.6 Combined License Information

Any utility that references the US-APWR certified design for construction and operation is specifically responsible for the following:

COL 6.5(1) Preserving access and inspectability for ASME Code Section III for Class 1 and Class 2 components is the responsibility of the COL Applicant.

COL 6.5(2) The COL Applicant is responsible for preparation and implementation of an Initial Test Program and an Inservice Test program in accordance with ASME Code Section III for Class 2 and Class 3 systems and components.

COL 6.5(3) The COL Applicant is responsible to provide surveillance test procedures (Chapter 16) for the containment pH adjustment.

COL 6.5(4) The COL Applicant is responsible to provide an as-built list of material used in or on the ESF filter systems by their commercial names, quantities (estimate where necessary), and chemical composition and show that the radiolytic or pyrolytic decomposition products, if any, of each material will not interfere with the safe operation of this or any other ESF.

6.5.7 References

6.5-1 U.S. Nuclear Regulatory Commission, Design, Inspection, and Testing Criteria for Air Filtration and Adsorption Units of Post-Accident Engineered-Safety-Feature Atmosphere Cleanup Systems in Light-Water-Cooled Nuclear Power Plants, Regulatory Guide 1.52, Rev. 3, June 2001.

6.5-2 Contents of Applications; Technical Information, Title 10, Code of Federal Regulations, 10 CFR 50.34, January 2007 Edition.

6.5-3 U.S. Nuclear Regulatory Commission, Alternative Radiological Source Terms for Evaluating Design Basis Accidents at Nuclear Power Reactors, Regulatory Guide 1.183, July 2000.

6.5-4 Code on Nuclear Air and Gas Treatment, ASME AG-1-2003, American Society of Mechanical Engineers, September 2003.

6.5-5 Testing of Nuclear Air Treatment Systems, ASME N510-1989, American Society of Mechanical Engineers, December 1989.

6.5-6 U.S. Nuclear Regulatory Commission Containment Spray as a Function of Fission Product Removal, NUREG-0800, 6.5.2, Rev. 4, March 2007.

6.5-7 Nuclear Regulatory Commission, Powers, D.A. and Burson, S.B., A Simplified Model of Aerosol Removal by Natural Processes in Reactor Containments, NUREG/CR-6189, July 1996.

Table 6.5-1 Summary of Fission Product Removal and Control Mechanisms

Fission product removal effects differ with the chemical forms of the radioactive iodine. The assumed chemical forms are noble gas, elemental iodine, organic iodine, and particulate (aerosol). The fission product removal effects in the US-APWR containment under accident conditions are the following:

Mechanism	Noble Gas	Elemental Iodine	Organic Iodine	Particulate (Aerosol)
Containment Spray	Not Applicable	Slight effect, No credit applied (Note 1)	Not Applicable	Applicable (Based on SRP 6.5.2 [Ref. 6.5-6])
Natural Deposition (Note 2)	Not Applicable	Applicable (Note 3) (Based on SRP 6.5.2 [Ref. 6.5-6])	Not Applicable	Applicable (Powers natural deposition model (NUREG/CR-6189 [Ref. 6.5-7]): 10th percentile)
Radioactive Decay	Applicable	Applicable	Applicable	Applicable
Containment Leakage (Note 4)	Applicable (Based on Technical Specifications)	Applicable (Based on Technical Specifications)	Applicable (Based on Technical Specifications)	Applicable (Based on Technical Specifications)
Annulus Emergency Exhaust System	Not Applicable	Not Applicable	Not Applicable	Applicable (HEPA filter)

Notes:

1) The CSS with NaTB baskets is expected to achieve a pH of at least 7 in the RWSP. Thus, the CSS can remove elemental iodine slightly. Therefore, we assume that the CSS does not remove elemental iodine.

2) Refer to Appendix 15A.1.2.

3) The CSS removal effects contain the removal effect by natural deposition. Because the removal effects for elemental iodine by the CSS is not credited, the removal effects for elemental iodine by natural deposition can be credited in not only the sprayed region, but also the unsprayed region.

4) Containment Leakage to the penetration areas is treated by the annuls emergency exhaust system

Table 6.5-2 Annulus Emergency Exhaust System – Equipment Specifications

Description	Specification
1. Annulus Emergency Exhaust Filtration Units	
Auxiliaries	High-efficiency prefilter, HEPA filter
Quantity	Two 100% capacity trains
HEPA particulate removal efficiency	99% minimum
HEPA Filter Type	No. Designation 8 (Table FC-4110, ASME AG-1, based on 2,000 scfm*)
2. Annulus Emergency Exhaust Filtration Unit Fans	
Quantity	2 (1 per Train)
Type	Centrifugal
Design Air Flow Rate	5,600 ft^3/min

Note:

* Cubic foot of air per minute with a standard density.

Table 6.5-3 Annulus Emergency Exhaust System – Comparison to Regulatory Guide 1.52 (Sheet 1 of 5)

No.	Regulatory Position Summary	US-APWR Design
2.	Environmental Design Criteria	
2.1	Design (including fan) based on anticipated range of LOCA and post-LOCA operating temperature, pressure, relative humidity, radiation levels, and airborne iodine concentrations	The design of system is based on anticipated range of LOCA and post-LOCA.
2.2	Location and layout consider radiation dose to essential personnel, and ESFs and services in the vicinity	Separation criteria (including shielding and access control) are addressed, including EQ considerations
2.2a	Source term to RG 1.3, 1.4, 1.25, or 1.183	Source term to RG 1.183 (Ref. 6.5-3)
2.3	Adsorber design based on concentration and relative abundance of the iodine species (elemental, particulate, and organic)	N/A
2.4	Operation should not degrade the operation of other ESFs; operation of other should not degrade annulus emergency exhaust system operation	Separation criteria applied to system trains and other ESF trains
2.5	Design should consider both lowest and highest post-LOCA temperature in the penetration and safeguard component areas	The system is designed for 130^0F maximum and 50^0F minimum temperature in the penetration or safeguard component areas
2.6	Design should consider any significant contaminants that may occur during a LOCA, such as dusts, chemicals, excessive moisture, or other particulate matter that could degrade the system operation	System design considers post-LOCA containment contaminants

Table 6.5-3 Annulus Emergency Exhaust System – Comparison to Regulatory Guide 1.52 (Sheet 2 of 5)

No.	Regulatory Position Summary	US-APWR Design
3.	System Design Criteria	
3.1	Redundant trains of a typical commercial nuclear power plant design	System has two, 100% capacity redundant trains
3.2	Physical separation of trains, with missile protection	Separation criteria and missile protection employed
3.3	Component protection from LOCA pressure surges, if necessary	N/A
3.4	Seismic Category I (RG 1.29) if system failure could lead to a release that exceeds the regulatory limit	Filtration units and fans designed to seismic Category I
3.5	Environmental design basis includes containment spray additive	N/A The annulus emergency exhaust system is installed outside of C/V.
3.6	Train volumetric air flow should not exceed 30,000 ft^3/min each	Train volumetric air flow rate (filter unit and fan) is 5,600 ft^3/min each
3.6a	Charcoal adsorber residence time should be approx. 0.25 seconds per 2 inches of activated carbon or longer (see 4.11, below)	N/A
3.7	Flow rate and differential pressure indicated, alarmed and recorded in MCR	Train outlet low flow alarmed in MCR; train outlet flow recorded; train inlet flow from penetration areas recorded. Differential pressure across each filter (prefilter and HEPA) indicated locally
3.8	RGs 1.30, 1.100, and 1.118, and IEEE 334 should be considered in the design. Electrical supply and distribution design should be designed to RG 1.32. I&C should be designed to IEEE Std 603-1991, and EQ qualified and tested by RG 1.89	Applicable to US-APWR design.
3.9	Automatic actuation by redundant LOCA signals	System is automatically initiated by the ECCS actuation signal, which is fully redundant

Table 6.5-3 Annulus Emergency Exhaust System – Comparison to Regulatory Guide 1.52 (Sheet 3 of 5)

No.	Regulatory Position Summary	US-APWR Design
3.10	Trains totally enclosed to control leakage and designed to facilitate inspection, maintenance (while precluding contamination), and testing to RG 8.8	Filtration units are totally enclosed and designed in accordance with RG 8.8
3.11	Outdoor air intakes protected to minimize effects of onsite, offsite, and environmental contaminates	System exhausts from penetration and safeguard component areas during automatic ESF function
3.12	Exhaust ductwork maximum leakage defined by Section SA-4500 of ASME AG-1-1997	Exhaust ductwork maximum leakage is defined by Section SA-4500 of ASME AG-1-2003 (Ref. 6.5-4)
3.12a	Exhaust ductwork maximum leakage test performed by Section TA of ASME AG-1-1997	Exhaust ductwork maximum leakage test performed by Section TA of ASME AG 1-2003
4.	Component Design Criteria and Qualification Testing	
4.0a	Components constructed and tested to Division II of ASME AG-1-1997, as modified and supplemented below:	
4.0b	Components designed to Division II of ASME AG-1-1997, as follows	
4.1-4.5	Components designed in accordance with ASME AG-1-1997	Applicable to US-APWR design, including ASME AG 1-2003.
4.1-4.5	Components constructed and tested to ASME AG-1-1997	Applicable to US-APWR design, including ASME AG 1-2003.
4.6	Filter and adsorber banks arranged in accordance with ERDA 76-21 and AG-1a-2000	Applicable to US-APWR design, including ASME AG 1-2003.
4.7	Filter housings, including floors and doors, designed to Sect. HA of ASME AG-1a-2000	Applicable to US-APWR design, including ASME AG 1-2003.
4.7a	Filter housings, including floors and doors, constructed to Sect. HA of ASME AG-1a-2000	Applicable to US-APWR design, including ASME AG 1-2003.
4.8	Drains designed to Sect. 4.5.8 of ERDA 76-21 and Sect. HA of ASME AG-1a-2000, with drain traps to preclude filter bypass through drain system	System normally isolated from A/B HVAC system. Heaters automatically energize to dry incoming air

Table 6.5-3 Annulus Emergency Exhaust System – Comparison to Regulatory Guide 1.52 (Sheet 4 of 5)

No.	Regulatory Position Summary	US-APWR Design
4.8a	Auxiliary operator rounds procedure item to check water level	N/A
4.9	Control relative humidity of incoming air to 70% or less	N/A
4.10	Adsorbers should be designed to Sect. FD for Type II cells	N/A
4.10a	Adsorbers should be constructed and tested to Sect FD for Type II cells	N/A
4.10b	Adsorber cooling (including safe, reliable, manual or automatic fire protection detection and spray) should be single-failure proof	N/A
4.10c	Fire protection should be hard-piped, have adequate coverage by adequate, and a reliable water source	N/A
4.11	Adsorber should meet Sect FF-5000 of ASME AG-1-1997	N/A
4.11a	Purchase spec. should include suitable qualification test	N/A
4.11b	Charcoal adsorber average residence time should be approx. 0.25 seconds per 2 inches of activated carbon, or longer (see 3.6a, above), by Sections FD and FE of ASME AG-1-1997	N/A
4.11c	Adsorber design maximum loading to 2.5 milligram total iodine per gram	N/A
4.11d	Adsorber impregnate maximum 5%	N/A
4.11e	Sample canisters, if used, designed to App. A of ASME N509-1989	N/A
4.12	Ducts and housings constructed for free and clean access and air flow, with minimum “hide out”	Applicable to US-APWR design, including ASME AG 1-2003.

Table 6.5-3 Annulus Emergency Exhaust System – Comparison to Regulatory Guide 1.52 (Sheet 5 of 5)

No.	Regulatory Position Summary	US-APWR Design
4.13	Dampers designed to Section DA of ASME AG-1-1997	Applicable to US-APWR design, including ASME AG 1-2003.
4.14	Fan, mounting and ductwork connections designed to Sect BA (blowers) and SA (ducts) of ASME AG-1-1997	Applicable to US-APWR design, including ASME AG 1-2003.
4.14a	Fan, mounting and ductwork connections constructed and tested to Sect BA (blowers) and SA (ducts) of ASME AG-1-1997	Applicable to US-APWR design, including ASME AG 1-2003.
4.14b	Ductwork designed to Sect SA of ASME AG-1-1997	Applicable to US-APWR design, including ASME AG 1-2003.
4.14c	Ductwork constructed and tested to Sect SA of ASME AG-1-1997	Applicable to US-APWR design, including ASME AG 1-2003.
5.	Maintainability Criteria	
5.0	Maintenance design provisions to Section 4.8 of ASME N509-1989, and Section HA of ASME AG-1-a-2000	Applicable to US-APWR design, including ASME AG 1-2003.
5.1	Maintenance accessibility design to Section 2.3.8 of ERDA 76-21 and Section HA of ASME AG-1a-2000	Applicable to US-APWR design, including ASME AG 1-2003.
5.1a	Design should include a minimum of 3 feet between bank mounting frames	Applicable to US-APWR design, including ASME AG 1-2003.
5.1b	Design should include maximum dimension plus at least 3 feet of clearance for component replacement	Applicable to US-APWR design, including ASME AG 1-2003.
5.2	Air cleanup components operated during Construction phase replaced before Initial Test Program (Chapter 14)	Applicable to US-APWR design, including ASME AG 1-2003.
6	In-Place Testing Criteria	Applicable to US-APWR design, including ASME AG 1-2003.
7	Laboratory Testing Criteria for Activated Carbon	Applicable to US-APWR design, including ASME AG 1-2003.

Table 6.5-4 Containment Sprayed/Unsprayed Volume

Item	Volume ft^3
1. Total Net Free Volume Above Operating Floor (Note 1)	2,170,000
2. Unsprayed Volume Above Operating Floor	488,000
3. Total Sprayed Free Volume Above Operating Floor	1,682,000
4. Total Net Free Containment Volume	2,802,000
5. Percentage of Sprayed Containment Volume	60%
6. Percentage of Unsprayed Containment Volume	40%

Notes:

1. Sheltered volumes by steam generator compartments and pressurizer compartment are subtracted.

Table 6.5-5 Containment Operations Following a Design Basis Accident

General	Remarks
Type of Containment Structure	Prestressed, post-tensioned concrete structure with a cylindrical wall, hemispherical dome, and a flat, reinforced concrete foundation slab Interior wall lined with 1/4 in. steel plate anchored to the concrete
Appropriate Internal Fission Product Removal Systems	Containment spray with NaTB Baskets
Free Volume of Containment	2,800,000 ft^3
Time-Dependent Parameters	**Value**
Leak Rate of Containment During LOCA (0-24 hours)	0.15%/day
Leak Rate of Containment Post LOCA (1-30 Days)	0.075%/day
Leakage Fraction to Penetration Areas	50%
Leakage Fraction to Environment	50%

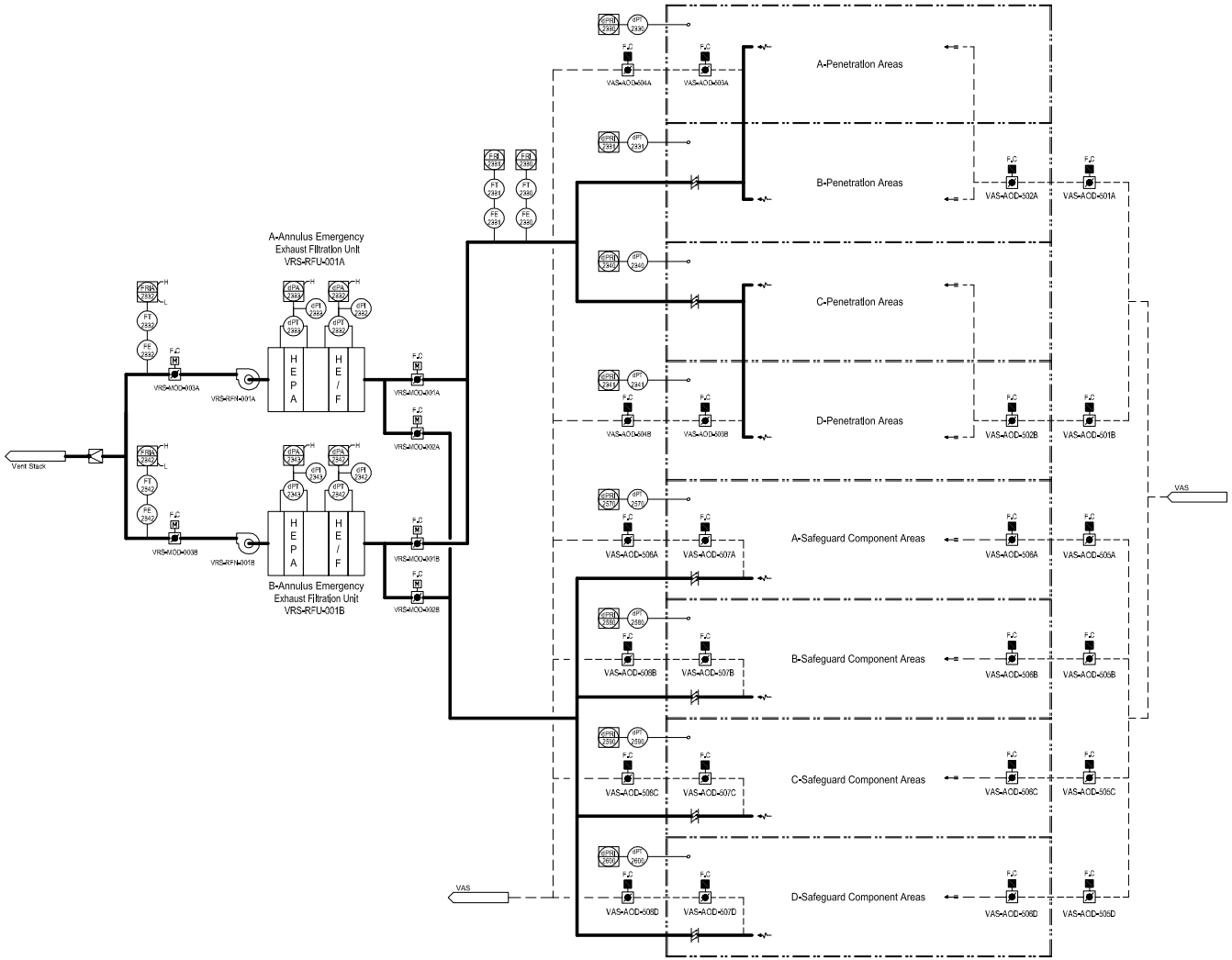

Figure 6.5-1 Annulus Emergency Exhaust System - Simplified Flow Diagram

6.6 Inservice Inspection of Class 2 and 3 Components

Regular and periodic examinations, tests, and inspections of pressure retaining components and supports are required by 10CFR50.55a(g) (Ref. 6.6-1). This section discusses the Inservice Inspection program to address these requirements.

6.6.1 Components Subject to Examination

Chapter 3, section 3.2, identifies the ASME Code Section III Class 2 and 3 components as corresponding quality group B and C components. Class 2 and 3 pressure-retaining components and supports subject to examination include pressure vessels, piping, pumps, valves, and their bolting. Preservice and inservice examinations, tests and inspections are performed in accordance with ASME Code Section XI (Ref. 6.6-2), including associated Mandatory Appendices, Table IWC-2500-1 for Class 2 components, and Table IWD-2500-1 for Class 3 components.

The specific edition and addenda of the ASME Code used to determine the requirements for the inspection plan for the initial and subsequent inspection intervals is to be delineated in the Inservice Inspection and Testing program. The ASME Code includes requirements for system leakage tests for active components. The requirements for system leakage tests are defined in ASME Section XI, Article IWC-5220 for Class 2 pressure retaining components and ASME Section XI, Article IWD-5220 for Class 3 pressure retaining components (Ref. 6.6-2). These tests verify the pressure boundary integrity in conjunction with inservice inspection.

The COL Applicant is responsible for preparing a preservice inspection program (non-destructive baseline examination) and an Inservice Inspection program for ASME Code Section III Class 2 and 3 systems, components (pumps and valves), and supports. The inservice inspection program and inservice testing programs is submitted to the NRC. These programs comply with applicable inservice inspection and testing provisions of 10CFR50.55a(g) and (f).

6.6.2 Accessibility

The physical arrangement of ASME Code Class 2 and 3 components is designed to allow personnel and equipment access to the extent practical to perform the required inservice examinations specified by the ASME Code Section XI (Ref. 6.6-2) and mandatory appendices. Design provisions, in accordance with Section XI (Ref. 6.6-2), Article IWA-1500, are incorporated in the design processes for Class 2 and 3 components.

Piping and pipe support locations, insulation, hangers, and stops are designed so as not to interfere with the inspection equipment and personnel. Where this cannot be done, the components are designed to be easily and quickly removable with minimal special handling equipment.

Removable insulation and shielding is provided on those piping systems requiring volumetric and surface examination for Class 2 components and visual examination for

Class 3 components. Removable hangers are provided, as necessary and practical, to facilitate inservice inspection. Working platforms are provided in areas requiring inspection and servicing of pumps and valves. Temporary or permanent working platforms, walkways, scaffolding, and ladders are provided to facilitate access to piping and component welds. The components and welds requiring inservice inspection allow for the application of the required inservice inspection methods. Such design features include sufficient clearances for personnel and equipment, maximized examination surface distances, two-sided access, favorable materials, weld-joint simplicity, elimination of geometrical interferences, and proper weld surface preparation.

The piping arrangement allows for adequate separation of piping welds so that space is available to perform inservice inspection. Adjacent welds are separated by sections of straight pipe of sufficient length to conduct inspections. Welds in piping that passes through walls are located away from the wall as required by ASME Code Section XI. Component nozzles, tees, elbows, valves, branch connections, and other fittings are not connected to each other unless they are specifically designed with an extended tangent length adjacent to the weld to permit weld examination.

Some of the ASME Class 2 and 3 components are included in modules fabricated offsite and shipped to the site. The modules are designed and engineered to provide access for inservice inspection and maintenance activities. The attention to detail engineered into the modules before construction provides the necessary accessibility for inspection and maintenance.

Space is provided to handle and store insulation, structural members, shielding, and other materials related to the inspection. Suitable hoists and other handling equipment, lighting, and sources of power for inspection equipment are installed at appropriate locations.

Space is provided in accordance with IWA-1500(d) for the performance of examinations alternative to those specified in the event that structural defects or modifications are revealed that may require alternative examinations. Space is also provided per IWA-1500(e) for necessary operations associated with repair/replacement activities.

6.6.3 Examination Techniques and Procedures

Surface, volumetric, and visual examinations are required for ASME Code Class 2 pressure retaining components and their welded attachments per Table IWC-2500-1. Visual examinations only are required for ASME Code Class 3 pressure retaining components and their welded attachments per Table IWD-2500-1.

A wide range of non-destructive tests for volumetric and surface material defects continue to be developed. The COL Applicant is responsible for selecting specific examination techniques and preparing suitable inspection procedures. This approach takes advantage of the most up-to-date information and experience available, as well as ensuring an inspection program acceptable to the operating organization. Qualification of the ultrasonic inspection equipment, personnel, and procedures is in compliance with Appendix VII and Appendix VIII of the ASME Code Section XI (Ref. 6.6-2). The liquid penetrant method, eddy current, ultrasonic, or the magnetic particle method is used for

surface examinations. Radiography, ultrasonic, or eddy current techniques (manual or remote) are used for volumetric examinations.

To the maximum extent possible, sufficient radial clearances are provided around pipe or component welds requiring volumetric or surface examination for inservice inspection.

Code Cases accepted for use by the NRC or appearing in RG 1.147 (Ref. 6.6-3), "Inservice Inspection Code Case Acceptability", ASME Section XI (Ref. 6.6-2), Division 1, may be applied.

6.6.4 Inspection Intervals

Inspection intervals are established as defined in Subarticles IWC-2400 for ASME Code Class 2 components and IWD-2400 for ASME Code Class 3 components. The interval may be reduced or extended by as much as one year in accordance with ASME Code Subarticle IWA-2430 so that inspections may coincide with plant outages. Inservice examinations and system pressure tests for Class 2 and 3 components may be performed during system operation or during plant outages such as refueling shutdowns or maintenance shutdowns occurring during the inspection interval.

6.6.5 Examination Categories and Requirements

Preservice examinations of ASME Code Class 2 components are performed in accordance with ASME Code Section XI (Ref. 6.6-2), Subarticle IWC-2200. Preservice examinations of Class 3 components are performed in accordance with ASME Code Section XI (Ref. 6.6-2), Subarticle IWD-2200. Similarly, Class 2 examination categories meet the requirements of Table IWC-2500-1 and Class 3 examination categories meet the requirements of Table IWD-2500-1. If alternate examination methods are used, the examination method will meet the requirements of Subarticle IWA-2240.

Examination categories for ASME Code Class 2 pressure retaining components include the following:

- C-A, pressure retaining welds in pressure vessels
- C-B, pressure retaining nozzle welds in pressure vessels
- C-C, weld attachments for vessels, piping, pumps, and valves
- C-C, pressure retaining bolting greater than 2 inches in diameter
- C-F-1, pressure retaining welds in austenitic stainless steel or high alloy piping
- C-F-2, pressure retaining welds in carbon or low alloy piping
- C-G, pressure retaining welds in pumps and valves
- C-H, all pressure retaining components

Examination categories for ASME Code Class 3 pressure retaining components include the following:

- D-A, welded attachments for vessels, piping, pumps, and valves
- D-B, all pressure retaining components

6.6.6 Evaluation of Examination Results

Examination results are characterized using ASME Code Section XI (Ref. 6.6-2), Article IWA-3000 and evaluated using IWC-3000 for Class 2 components and IWD-3000 for Class 3 components. Guidelines for repair and replacement activities, if required, are according to ASME Code Section XI (Ref. 6.6-2), Article IWA-4000.

6.6.7 System Pressure Tests

System pressure testing complies with the criteria of ASME Code Section XI (Ref. 6.6-2), Article IWC-5000, for Class 2 systems, while the criteria of Article IWD-5000 apply for Class 3 systems. System leakage testing may be performed in accordance with IWC-5220 and IWD-5220 for Class 2 and 3 pressure retaining components (Categories C-H and D-B, refer to subsection 6.6.5). A system leakage test requires the segment of the system to be tested to be inservice at system pressure performing its normal operating function, or at the system pressure developed during a test conducted to verify system operability. In lieu of a system leakage test, a hydrostatic test may be used in accordance with IWC-5230 for Class 2 pressure retaining components or IWD-5230 for Class 3 pressure retaining components.

6.6.8 Augmented ISI to Protect against Postulated Piping Failures

An augmented ISI program is required for high-energy fluid system piping between containment isolation valves or—where no isolation valve is used inside containment—between the first rigid pipe connection to the containment penetration or the first pipe whip restraint inside containment and the outside isolation valve. The ISI program contains information addressing areas subject to inspection, method of inspection, and extent and frequency of inspection. The program covers the high-energy fluid systems described in Chapter 3, subsections 3.6.1 and 3.6.2.

The COL Applicant is responsible for preparing an augmented inservice inspection program for high-energy fluid system piping. The preservice inspection program addresses the equipment and examination techniques to be used.

As noted in subsection 6.6.2, the design and installed arrangement of US-APWR Class 2 and 3 components provide clearance adequate to conduct Code-required examinations. The COL Applicants are required to have administrative programs that ensure plant design translates accurately into the construction phase.

6.6.9 Combined License Information

Any utility that references the US-APWR design for construction and Licensed operation is responsible for the following COL items:

COL 6.6(1) The COL Applicant is responsible for the preparation of a preservice inspection program (non-destructive baseline examination) and an Inservice inspection program for ASME Code Section III Class 2 and 3 systems, components (pumps and valves), piping, and supports in accordance with 10 CFR5055a(g), including selection of specific examination techniques and preparing appropriate inspection procedures.

COL 6.6(2) The COL Applicant is responsible for preparing an augmented inservice inspection program for high-energy fluid system piping.

6.6.10 References

6.6-1. Inservice Inspection Requirements, Title 10, code of Federal Regulations, 10 CFR 50.55a(g), January 2007.

6.6-2. Rules for Inservice Inspection of Nuclear Power Plant Components, ASME Boiler & Pressure Vessel Code, Division 1, Section XI, American Society of Mechanical Engineers, July 2006.

6.6-3. U.S. Nuclear Regulatory Commission, Inservice Inspection Code Case Acceptability, ASME Section XI, Division 1, Regulatory Guide 1.147, Rev. 14, August 2005.