AmerenUE
Callaway Plant

PO Box 620
Fulton, MO 65251

November 30th, 2007

Mr. Elmo E. Collins, Jr.
C/O Mark Haire
Regional Administrator
U.S. Nuclear Regulatory Commission
Region IV
611 Ryan Plaza Drive, Suite 400
Arlington, TX 76011-4005

ULNRC 5460

Dear Mr.Collins:

**INITIAL LICENSE EXAM**

Callaway Plant wishes to challenge four questions on the Initial Licensing Exam administered on November 21, 2007.

- Question 3: Accept 'B' and 'C' as correct answers.
- Question 21: Accept 'C' and 'D' as correct answers.
- Question 45: Accept 'A' as the correct answer and disregard 'B'.
- Question 87: Accept 'C' and 'D' as correct answers.

Please see attached sheets for the justification of the above.

If you have any questions, please contact Daniel T. Harris at 573/676-6175.

Respectfully,

David G. Lantz

DGL/mrw

ULNRC 5460
November 30th, 2007

cc: Mr. Neil O'Keefe, Acting Chief
Division of Inspection and Regional Support (DIRS)
Mail Stop OWFN 6E3
Office of Nuclear Reactor Regulation
Washington, DC 20555-0001

Certrec Corporation
4200 South Hulen, Suite 422
Fort Worth, TX 76109
(Certrec receives ALL attachments as long as they are non-safeguards and public disclosed).

Index and send hardcopy to file(s):
T160.0005
T210.0006
A160.0761

Electronic distribution for the following can be made via GFES ULNRC Distribution:

C. D. Naslund
A. C. Heflin
L. H. Graessle
S. A. Maglio
T. B. Elwood

# Post-Examination Test Item Analysis

Lesson Plan / Course: ILT 2007 NRC Written Exam
Examination No / Title: NRC Final Written

Check the results of the examination.

- ☐ Small class (≤6): Questions were missed by three (3) or more trainees. Analysis is required for these questions.
- ☐ Large class (>6): Questions were missed by more than 30% of the class. Analysis is required for these questions.
- ☐ Analysis of questions requested by individual.
- ☐ None of the above apply and no analysis is required for this examination.

If a Test Item Analysis is to be performed, document the question number on the Question Analysis Worksheet and review each using the following guidelines. Record the results on the worksheet.

1. Review each question to ensure it is worded clearly and is not ambiguous. Ensure that it is properly constructed.
2. Review each question to ensure that it ties properly to the learning objectives' condition, performance and standard.
3. Review each question to ensure that it is technically accurate.
4. Review each question to ensure that adequate material was presented to allow for achievement of the associated learning objective.
5. Document Enhancement/CARS number if lesson plan requires changes or additions.

Determine if action is required for problem questions (e.g. delete from examination bank, revise question, revise lesson plan, etc). When action is required, ensure Vision is updated.

| Completed by: Daniel Harris | Date: 11/27/2007 |
|---|---|
| Answer Key Change/<br>Examination Re-grade<br>Authorized by: _____<br>Group Lead | |
| Comments:<br><br>Questions 1-75 are combined for RO and SRO<br>Questions 76-100 are SRO only | |

# QUESTION ANALYSIS WORKSHEET

| Question Number | Construction OK? (Y-N) | Objective Based? (Y-N) | Technically Accurate? (Y-N) | LP Content Acceptable? (Y-N) | Change Needed? (Y-N) | Final Disposition |
|---|---|---|---|---|---|---|
| 2 (10/12) | Y | Y | Y | Y | N | Accept As Is |
| 3 (1/12) | N | Y | Y | Y | Y | See Attached Sheet |
| 9 (9/12) | Y | Y | Y | Y | N | Accept As Is |
| 16 | N | Y | Y | Y | Y | Changed 'A' to read "ABPT507" |
| 21 (11/12) | Y | Y | Y | Y | Y | See Attached Sheet |
| 23 (6/12) | Y | Y | Y | Y | N | Accept As Is |
| 27 (9/12) | Y | Y | Y | Y | N | Accept As Is |
| 28 (8/12) | Y | Y | Y | Y | N | Accept As Is |
| 45 | Y | Y | N | Y | Y | See Attached Sheet |
| 60 (8/12) | Y | Y | Y | Y | N | Accept As Is |
| 72 (6/12) | Y | Y | Y | Y | N | Accept As Is |
| 73 (12/12) | Y | Y | Y | Y | N | Accept As Is |
| 77 (3/4) | Y | Y | Y | Y | N | Accept As Is |
| 81 (3/4) | N | Y | Y | Y | Y | Accept As Is |
| 91 (4/4) | Y | Y | Y | Y | N | Accept As Is |
| 94 (4/4) | Y | Y | Y | Y | N | Accept As Is |
| 97 (2/4) | Y | Y | Y | Y | N | Accept As Is |
| 100 (2/4) | Y | Y | Y | Y | N | Accept As Is |
| | | | | | | |
| | | | | | | |

# QUESTION ANALYSIS WORKSHEET

| Question Number | A | B | C | D | Correct Answer | |
|---|---|---|---|---|---|---|
| 2 (10/12) | | 2 | 1 | 7 | A | |
| 9 (9/12) | 1 | | | 8 | C | |
| 21 (11/12) | | 1 | | 10 | C/D | Accepted C / D as correct |
| 23 (6/12) | | 5 | | 1 | A | |
| 27 (9/12) | | 5 | 1 | 3 | A | |
| 28 (8/12) | 3 | 2 | | 3 | C | |
| 60 (8/12) | | | 8 | | D | |
| 72 (6/12) | | | | 6 | C | |
| 73 (12/12) | 2 | 2 | | 8 | C | |
| 77 (3/4) | 2 | | 1 | | D | |
| 81 (3/4) | | 1 | 2 | | A | |
| 91 (4/4) | | 3 | | 1 | C | |
| 94 (4/4) | | | 1 | 3 | B | |
| 97 (2/4) | | 1 | 1 | | A | |
| 100 (2/4) | 1 | | | 1 | C | |
| | | | | | | |
| | | | | | | |

| | | | | |
|---|---|---|---|---|
| Micah Benningfield (RO) | Four Feet ↔ | Brad Serfas (SROI) | Four Feet ↔ | Shannon Gaydos (RO) |
| ↕ Four Feet | Four Feet ↔ | ↕ Four Feet | Four Feet ↔ | ↕ Four Feet |
| Scott Maxwell (RO) | Four Feet ↔ | Bryan Parker (SROU) | Four Feet ↔ | Jeff Landrum (RO) |
| ↕ Four Feet | Four Feet ↔ | ↕ Four Feet | Four Feet ↔ | ↕ Four Feet |
| Jon Picard (RO) | Four Feet ↔ | Rob Mitchell (SROI) | Four Feet ↔ | Mike Huff (RO) |
| ↕ Four Feet | Four Feet ↔ | ↕ Four Feet | Four Feet ↔ | ↕ Four Feet |
| Trevis Rush (RO) | Four Feet ↔ | Mitch Taggart (SROI) | Four Feet ↔ | Chuck Hansen (RO) |

Question #3 Challenge Justification:

The question asks what is the affect of the EJ FCV-618,RHR Hx Bypass Valve, failing closed with EJ HCV-606, RHR Hx Outlet Valve, set at 30% open. The question asks for RHR HX Outlet Temperature and Total RHR flow changes from the Initial Steady State Conditions. The question is being challenged based on which "RHR HX Outlet Temperature" is being asked for. There is no argument that total RHR flow will be lower.

In the RHR system there is a local temperature indicator on the direct outlet of the HX (TI-608). There is also a temperature indication on the outlet of the HX, but downstream of the connection of the bypass flow (TE-604). This Temperature is on a chart recorder in the MCR. The question answer is asking for this temperature indication.

Answer 'C', the correct answer, states the RHR HX Outlet temperature will be Lower than initial outlet temperature. This is true based on the fact that you will not have the warmer bypass flow mixing with the HX outlet flow. 'C' is a correct answer if you assumed the RHR Hx Outlet Temp. asked for was the Temperature indication downstream of this flowpath (TE-604).

Answer 'B' states the RHR HX Outlet Temp will be higher than initial outlet temperature. This is true for the indication on the direct outlet of the Hx (TI-608). This is based on the fact that when the bypass valve closes the pump discharge pressure will go up and cause a higher differential pressure across EJ HCV-606. This will cause flow to go up slightly. With higher flow through the HX, and a constant cooling water flow, the outlet temperature of the HX will go up as well as the cooling water outlet temperature. This will be seen on TI-608.

Based on this information, answers 'B' and 'C' are acceptable as correct.

Drawing M-22EJ01 and fundamentals lesson plan "Heat Exchangers" are attached.

# HEAT EXCHANGER OPERATION (Cont.)

Referring to figure 13, the process flow rate and/or temperature entering the heat exchanger may vary depending on system load. Whether one or both of the parameters vary will cause the heat load on the heat exchanger to vary as a function of the above formula.

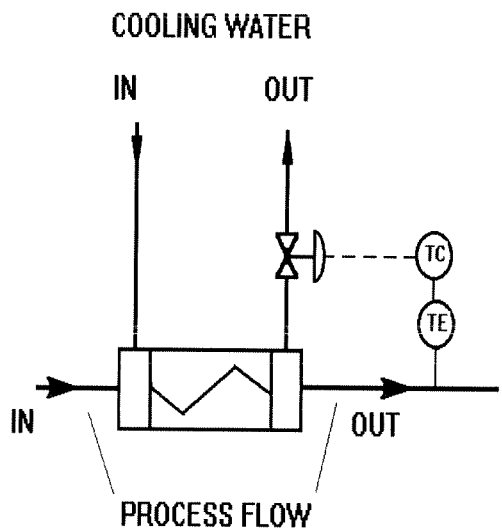


**Figure 13**

If the load on the system changes such that the inlet temperature of the process flow increases with the cooling water flow rate maintained constant then the outlet temperature of both the process flow and the cooling water will increase. The temperature element will sense the temperature increase and send an opening signal to the cooling water outlet valve. As the mass flow rate of the cooling water increases the heat transfer rate from the process flow will increase which will cause the process flow outlet temperature to be returned to its normal setpoint and the cooling water valve will remain at its new position. If, instead of a load change that causes a temperature change, but rather results in a change of the process flow rate the result would be the same. A change in the cooling water flow rate will always follow the change in the process flow outlet temperature.

# REVIEW QUESTIONS (Cont.)

*ans. b*

18. Non-condensible gases mixed in the vapor of the condenser will

    a. increase plant efficiency

    b. decrease the heat transfer rate

    c. increase the heat transfer rate

    d. increase the flow rate through the turbine

*ans. a*

19. Referring to Figure 17, increasing the oil flow rate through the heat exchanger will cause the oil outlet temperature to _____ and the cooling water outlet temperature to _____.

    a. increase; increase

    b. increase; decrease

    c. decrease; increase

    d. decrease; decrease

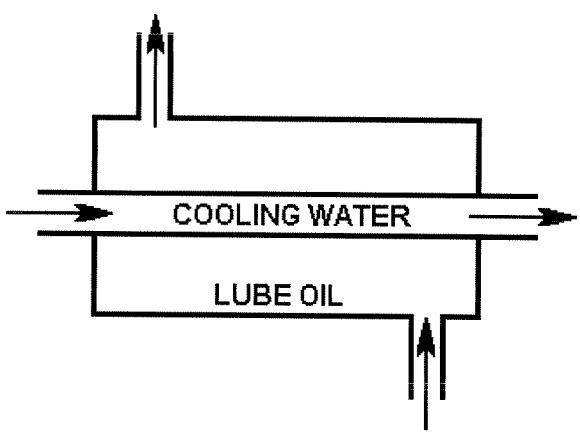


**Figure 17**

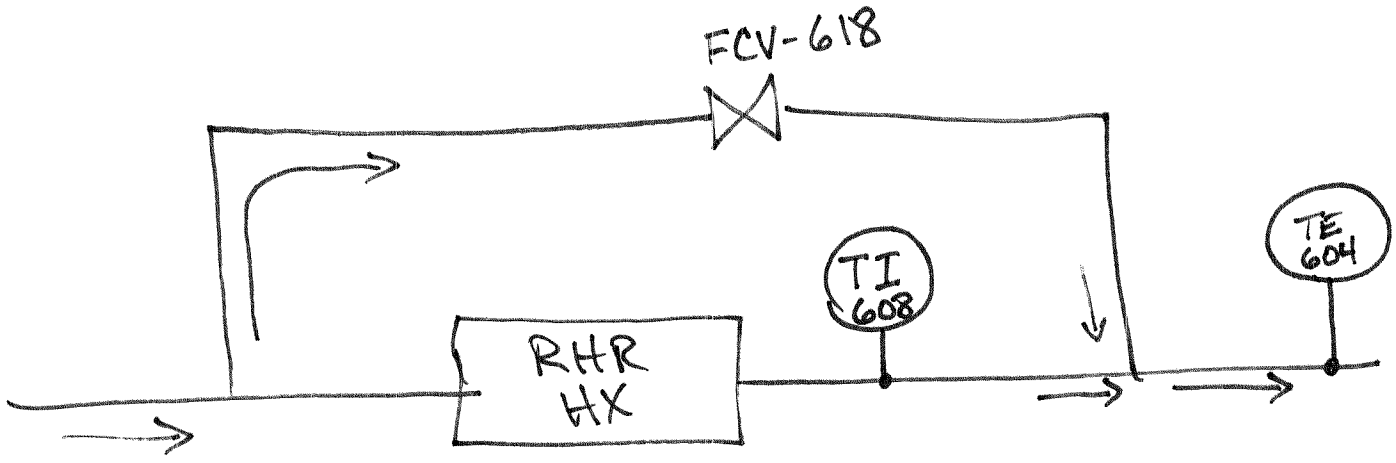
FCV-618
RHR
HX
TI
608
TE
604

M-22EJ01 (Q)

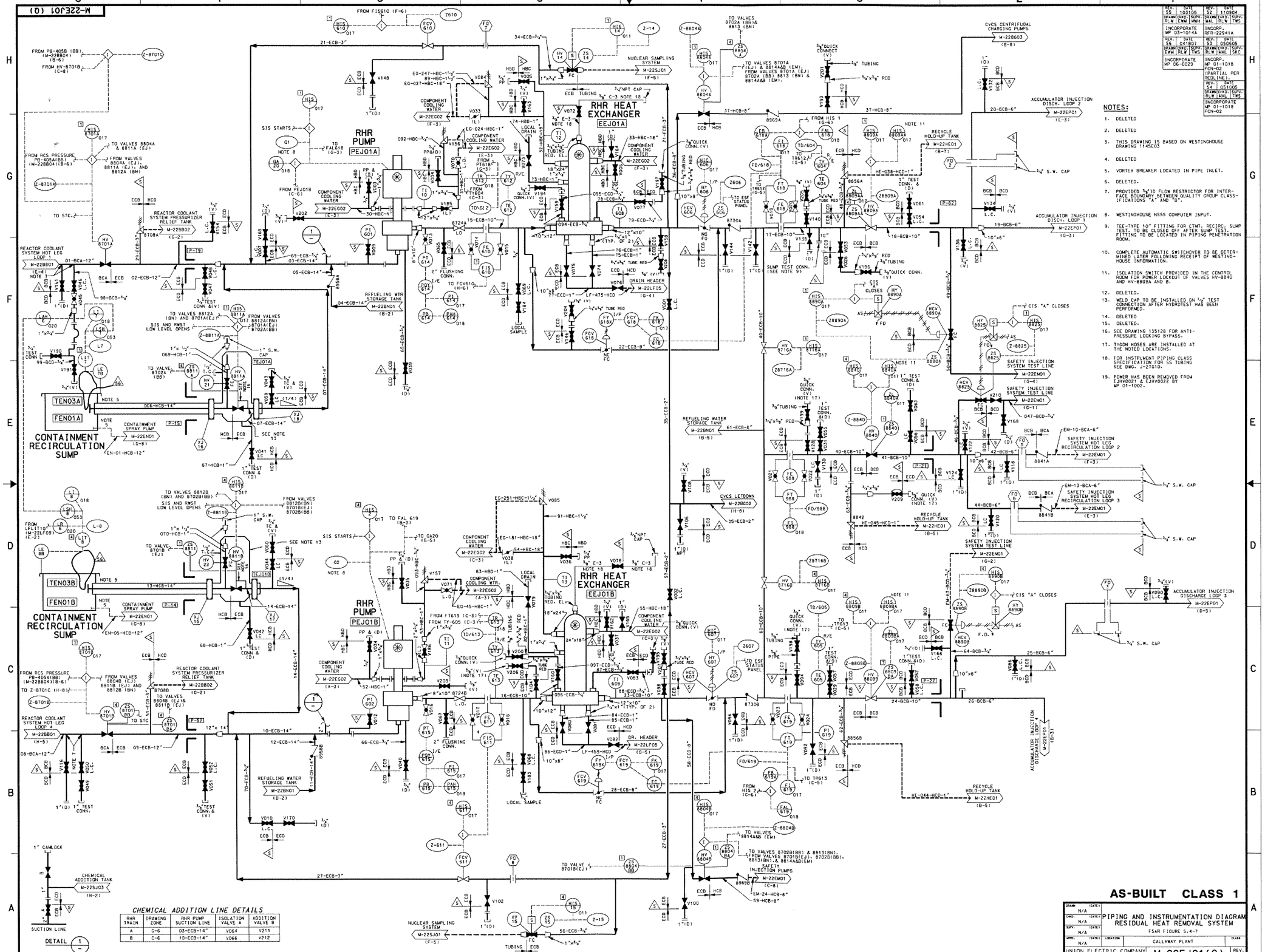


| REV. | DATE | REV. | DATE |
|---|---|---|---|
| 55 | 103105 | 52 | 110904 |
| DRAWN RLW | CHKD. EMW | SUPV. WMH | DRAWN MAL |
| CHKD. RLW | SUPV. TWS | | |

INCORPORATE MP 03-1014A

| REV. | DATE | REV. | DATE |
|---|---|---|---|
| 56 | 041801 | 53 | 050505 |
| DRAWN EMW | CHKD. RLW | SUPV. TWS | DRAWN MAL |
| CHKD. SKC | | | |

INCORPORATE MP 06-0029

INCORP. RFR-22941A

INCORP. MP 01-1018 FCN-02 (PARTIAL PER REDLINE).

| REV. | DATE |
|---|---|
| 54 | 051005 |
| DRAWN RLW | CHKD. MAL |
| SUPV. TWS | |

INCORPORATE MP 01-1018 FCN-02

## NOTES:

1. DELETED
2. DELETED
3. THIS DRAWING IS BASED ON WESTINGHOUSE DRAWING 1145E03
4. DELETED
5. VORTEX BREAKER LOCATED IN PIPE INLET.
6. DELETED.
7. PROVIDED 3/4"ID FLOW RESTRICTOR FOR INTERFACE BOUNDARY BETWEEN QUALITY GROUP CLASSIFICATIONS "A" AND "B".
8. WESTINGHOUSE NSSS COMPUTER INPUT.
9. TEE-TYPE 10" FITTING FOR CTWT. RECIRC. SUMP TEST. TO BE CLOSED OFF AFTER SUMP TEST. FITTING TO BE LOCATED IN PIPING PENETRATION ROOM.
10. COMPLETE AUTOMATIC SWITCHOVER TO BE DETERMINED LATER FOLLOWING RECEIPT OF WESTINGHOUSE INFORMATION.
11. ISOLATION SWITCH PROVIDED IN THE CONTROL ROOM FOR POWER LOCKOUT OF VALVES HV-8840 AND HV-8809A AND B.
12. DELETED.
13. WELD CAP TO BE INSTALLED ON 1/2" TEST CONNECTION AFTER HYDROTEST HAS BEEN PERFORMED.
14. DELETED
15. DELETED.
16. SEE DRAWING 13512B FOR ANTI-PRESSURE LOCKING BYPASS.
17. TYGON HOSES ARE INSTALLED AT THE NOTED LOCATIONS.
18. FOR INSTRUMENT PIPING CLASS SPECIFICATION FOR SS TUBING SEE DWG. J-21010.
19. POWER HAS BEEN REMOVED FROM EJHV0021 & EJHV0022 BY MP 01-1002.

### CHEMICAL ADDITION LINE DETAILS

| RHR TRAIN | DRAWING ZONE | RHR PUMP SUCTION LINE | ISOLATION VALVE A | ADDITION VALVE B |
|---|---|---|---|---|
| A | C-6 | 03-ECB-14" | V064 | V211 |
| B | C-6 | 10-ECB-14" | V066 | V212 |

**AS-BUILT CLASS 1**

| | | |
|---|---|---|
| DRAWN: N/A | DATE: | PIPING AND INSTRUMENTATION DIAGRAM RESIDUAL HEAT REMOVAL SYSTEM FSAR FIGURE 5.4-7 |
| CHKD.: N/A | DATE: | |
| SUPV.: N/A | DATE: | |
| APPD.: N/A | DATE: | LOCATION: CALLAWAY PLANT — CLASS: |
| UNION ELECTRIC COMPANY ST. LOUIS, MO | | M-22EJ01(Q) — REV. 56 |

Question #21 Challenge Justification:

The question asks for the earliest time that the "A" EDG was inoperable due to the EDG Fuel Oil Storage Tank level being too low. Per OSP-NE-0001A, Standby Diesel Generator 'A' Periodic Tests, rev 28, Attachment 3, if the Computer Point JEL0003, DG Fuel TK A LEV, is used the acceptance criteria is >79.6% (this corresponds to >80,900 gallons). This would make answer 'D' correct. If indicator JELIT0005, Emerg F.O. STOR TK A LEV IND XMTR, is used the acceptance criteria is > 82% (this corresponds to > 80,900 gallons). This would make answer 'C' correct.

Based on this information, answers 'C' and 'D' are acceptable as correct answers.

OSP-NE-0001A, Standby Diesel Generator 'A' Periodic Tests, Attachment 3, sheet 2 of 2, is attached.

Ameren UE
Callaway Plant

# OSP-NE-0001A

# STANDBY DIESEL GENERATOR A PERIODIC TESTS

## MINOR Revision 028



CONTINUOUS USE

## Attachment 3 (Cont'd.)

Sheet 2 of 2

Computer Point

| Step(s) | Description | | Acceptance Criteria | Value | Initial |
|---|---|---|---|---|---|
| 6.6.9 | JE LI-12A, DG A DAY TANK FUEL LEV | | ≥ 3.5 feet | _____ feet | |
| 6.6.10 | TJE01A, EMERG F/O SYS STOR TK A level **(mark indicator NOT used N/A)** | JEL0003, DG FUEL TK A LEV | > 79.6 % (> 80,900 gal)* | _____ % | |
| | | JELIT0005, EMERG F.O. STOR TK A LEV IND XMTR | > 82 % (> 80,900 gal)* | _____ % | |
| 7.27 | Diesel Generator A restoration complete | | N/A | N/A | |
| 7.28 | All required documents submitted to SM/CRS for review. | | N/A | N/A | |

| M&TE Description | M&TE Number | M&TE Cal Due Date |
|---|---|---|
| | | |
| | | |

| Performer(s) Print Name | Performer(s) Initials | Date/Time |
|---|---|---|
| | | |
| | | |
| Reviewer (SM/CRS) Signature | | Date/Time |

*Calculation JE-13 determined the required gallons of fuel required which is greater than the Tech Spec requirement of 80,400 gal.

Question #45 Challenge Justification:

The question asks what action is required to lower Pressurizer pressure from 2285 psig to 2235 psig with manual control of the Pressurizer Pressure Master Controller. The answer key states 'B', Increase the controller output, as the correct answer. In accordance with OOA-BB-00002, Actuations vs. Controller Output, controller output should be LOWERED to cause the Pressurizer Spray valves to open, thus reducing Pressurizer Pressure.

This would make 'A', Decrease the controller output, the correct answer.

OOA-BB-00002, Actuations vs. Controller Output is attached.

Actuations -VS- Controller Output

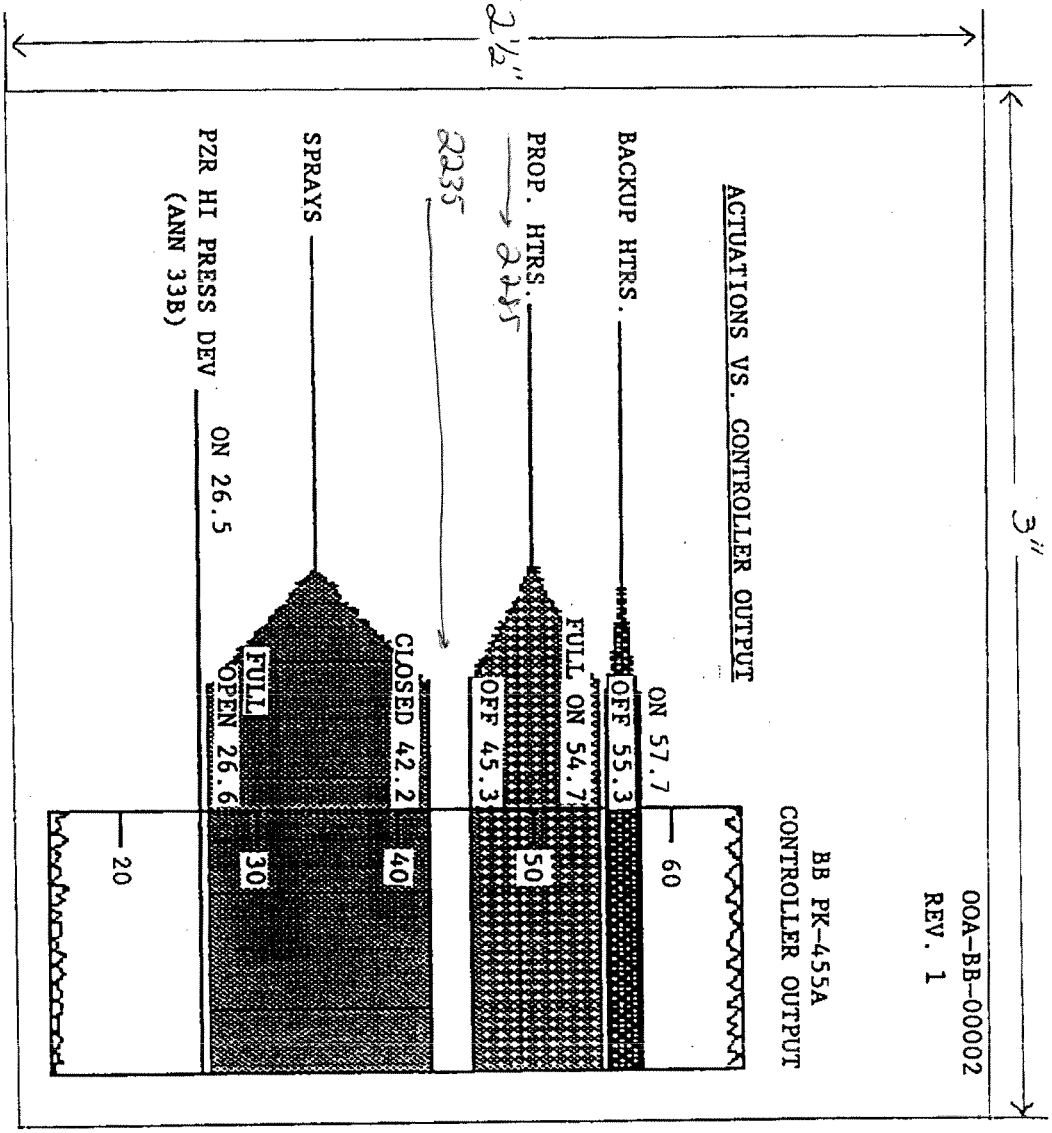

Question #87 Challenge Justification:

The question asks what the impact of having 2 SI accumulators inoperable would be in accordance with Technical Specifications. Answer 'C' states, "SI accumulator operability may not meet the requirements of ECCS acceptance criteria for maintenance of a coolable core geometry." Technical Specifications Bases for LCO 3.5.1, page B3.5.1-3, states:

This LCO helps to ensure that the following acceptance criteria established for the ECCS by 10CFR50.46 (Ref. 2) will be met following a LOCA:

a. Maximum fuel element cladding fuel temperature is $\leq$ 2200°F;
b. Maximum cladding oxidation is $\leq$0.17 times the total cladding thickness before oxidation;
c. Maximum hydrogen generation from zirconium water reaction is $\leq$ 0.01 times the hypothetical amount that would be generated if all of the metal in the cladding cylinders surrounding the fuel, excluding the cladding surrounding the plenum volume, were to react; and
**d. Core is maintained in a coolable geometry.**

While the boron concentration is based on ensuring the maintenance of a subcritical reactor in a post-LOCA environment, this also plays a part in maintaining a coolable geometry. By maintaining the reactor subcritical, a coolable geometry is maintained.

This would make 'C', as well as 'D' correct answers.

LCO 3.5.1 and it's Bases are attached..

## 3.5 EMERGENCY CORE COOLING SYSTEMS (ECCS)

### 3.5.1 Accumulators

LCO 3.5.1 Four ECCS accumulators shall be OPERABLE.

APPLICABILITY: MODES 1 and 2,
MODE 3 with RCS pressure > 1000 psig.

ACTIONS

| CONDITION | REQUIRED ACTION | | COMPLETION TIME |
|---|---|---|---|
| A. One accumulator inoperable due to boron concentration not within limits. | A.1 | Restore boron concentration to within limits. | 72 hours |
| B. One accumulator inoperable for reasons other than Condition A. | B.1 | Restore accumulator to OPERABLE status. | 24 hours |
| C. Required Action and associated Completion Time of Condition A or B not met. | C.1 | Be in MODE 3. | 6 hours |
| | AND | | |
| | C.2 | Reduce RCS pressure to ≤ 1000 psig. | 12 hours |
| D. Two or more accumulators inoperable. | D.1 | Enter LCO 3.0.3. | Immediately |

SURVEILLANCE REQUIREMENTS

| SURVEILLANCE | | FREQUENCY |
|---|---|---|
| SR 3.5.1.1 | Verify each accumulator isolation valve is fully open. | 12 hours |
| SR 3.5.1.2 | Verify borated water volume in each accumulator is ≥ 6061 gallons and ≤ 6655 gallons. | 12 hours |
| SR 3.5.1.3 | Verify nitrogen cover pressure in each accumulator is ≥ 602 psig and ≤ 648 psig. | 12 hours |
| SR 3.5.1.4 | Verify boron concentration in each accumulator is ≥ 2300 ppm and ≤ 2500 ppm. | 31 days<br><br>AND<br><br>-------- NOTE-------<br>Only required to be performed for affected accumulators<br>----------<br><br>Once within 6 hours after each solution volume increase of ≥ 70 gallons that is not the result of addition from the refueling water storage tank |
| SR 3.5.1.5 | Verify power is removed from each accumulator isolation valve operator when RCS pressure is > 1000 psig. | 31 days |

# B 3.5 EMERGENCY CORE COOLING SYSTEMS (ECCS)

## B 3.5.1 Accumulators

BASES

BACKGROUND

The functions of the ECCS accumulators are to supply borated water to replace inventory in the reactor vessel during the later stages of the blowdown phase to the beginning stages of the reflood phase of a large break loss of coolant accident (LOCA) and to provide Reactor Coolant System (RCS) makeup for a small break LOCA.

The ECCS injection mode following a large break LOCA consists of three phases: 1) blowdown; 2) refill; and 3) reflood.

The blowdown phase of a large break LOCA is the initial period of the transient during which the RCS departs from equilibrium conditions, and heat from fission product decay, hot internals, and the vessel continues to be transferred to the reactor coolant. The blowdown phase of the transient ends when the RCS pressure falls to a value approaching that of the containment atmosphere.

In the refill phase of a LOCA, which begins prior to or at the end of the blowdown phase, reactor coolant inventory has vacated the core through steam flashing and spill out through the break. The core is essentially in adiabatic heatup. The balance of accumulator inventory is then available to help fill voids in the lower plenum and reactor vessel downcomer so as to establish a recovery level at the bottom of the core and ongoing reflood of the core with the addition of safety injection (SI) water. The refill phase is complete when the injection of ECCS water has filled the reactor vessel downcomer and the lower plenum of the reactor vessel which is bounded by the bottom of the fuel rods (called bottom of core recovery time).

The reflood phase follows the refill phase and continues until the reactor vessel has been filled to the extent that the core temperature rise has been terminated.

The accumulators function in the later stages of blowdown to the beginning stages of reflood to fill the downcomer and lower plenum. The injection of the ECCS pumps aids during refill. Reflood and the following long term heat removal are accomplished by water pumped into the core by the ECCS pumps.

The accumulators are pressure vessels partially filled with borated water and pressurized with nitrogen gas. The accumulators are passive components, since no operator or control actions are required in order for them to perform their function. Internal accumulator tank pressure is

(continued)

BASES

APPLICABLE SAFETY ANALYSES (continued)

The worst case small break LOCA analyses also assume a time delay before pumped flow reaches the core. For the larger range of small breaks, the rate of blowdown is such that the increase in fuel clad temperature is terminated primarily by the accumulators, with pumped flow then providing continued cooling. As break size decreases, the accumulators and centrifugal charging pumps both play a part in terminating the rise in clad temperature. As break size continues to decrease, the role of the accumulators continues to decrease until they are not required and the centrifugal charging pumps become solely responsible for terminating the temperature increase.

This LCO helps to ensure that the following acceptance criteria established for the ECCS by 10 CFR 50.46 (Ref. 2) will be met following a LOCA:

a. Maximum fuel element cladding temperature is ≤ 2200°F;

b. Maximum cladding oxidation is ≤ 0.17 times the total cladding thickness before oxidation;

c. Maximum hydrogen generation from a zirconium water reaction is ≤ 0.01 times the hypothetical amount that would be generated if all of the metal in the cladding cylinders surrounding the fuel, excluding the cladding surrounding the plenum volume, were to react; ~~and~~

d. Core is maintained in a coolable geometry.

Since the accumulators empty themselves by the beginning stages of the reflood phase of a large break LOCA, they do not contribute to the long term cooling requirements of 10 CFR 50.46.

For both the large and small break LOCA analyses, a nominal contained accumulator water volume is used. The contained water volume is the same as the deliverable volume for the accumulators, since the accumulators are emptied, once discharged. For small breaks, an increase in water volume is a peak clad temperature penalty. For large breaks, an increase in water volume can be either a peak clad temperature penalty or benefit, depending on downcomer filling and subsequent spill through the break during the core reflooding portion of the transient. The analysis makes a conservative assumption with respect to ignoring the line water volume from the accumulator to the check valve. Values of 6061 gallons and 6655 gallons are specified.

(continued)

BASES (Continued)

APPLICABILITY

In MODES 1 and 2, and in MODE 3 with RCS pressure > 1000 psig, the accumulator OPERABILITY requirements are based on full power operation. Although cooling requirements decrease as power decreases, the accumulators are still required to provide core cooling as long as elevated RCS pressures and temperatures exist.

This LCO is only applicable at RCS pressures > 1000 psig. At pressures ≤ 1000 psig, the rate of RCS blowdown is such that the ECCS pumps can provide adequate injection to ensure that peak clad temperature remains below the 10 CFR 50.46 (Ref. 2) limit of 2200°F.

In MODE 3, with RCS pressure ≤ 1000 psig, and in MODES 4, 5, and 6, the accumulator motor operated isolation valves are closed with power removed from the valve operators to isolate the accumulators from the RCS (Refs. 6 and 7). Accumulator isolation is only required when the accumulator pressure is greater than or equal to the maximum RCS pressure for the existing RCS cold leg temperature, as allowed by the P/T limit curves provided in the PTLR. Accumulator isolation allows RCS cooldown and depressurization without discharging the accumulators into the RCS or requiring depressurization of the accumulators.

ACTIONS

A.1

If the boron concentration of one accumulator is not within limits, it must be returned to within the limits within 72 hours. In this Condition, the ability to maintain subcriticality or minimum boron precipitation time may be reduced. The boron in the accumulators contributes to the assumption that the combined ECCS water in the partially recovered core during the early reflooding phase of a large break LOCA is sufficient to keep that portion of the core subcritical. One accumulator below the minimum boron concentration limit, however, will have no effect on available ECCS water and an insignificant effect on core subcriticality during reflood. Boiling of ECCS water in the core during reflood concentrates boron in the saturated liquid that remains in the core. Even if the accumulators discharge following a large main steam line break with offsite power available, their impact is minor and not a design limiting event. Thus, 72 hours is allowed to return the boron concentration to within limits.

B.1

If one accumulator is inoperable for a reason other than boron concentration, the accumulator must be returned to OPERABLE status within 24 hours. This time period has been determined to have an

(continued)

BASES

SURVEILLANCE REQUIREMENTS (continued)

SR 3.5.1.2 and SR 3.5.1.3

Every 12 hours, borated water volume and nitrogen cover pressure are verified for each accumulator. Only one set of non-safety channels (1 of 2) is required for water level and pressure indication. The 12 hour Frequency is sufficient to ensure adequate injection during a LOCA. Because of the static design of the accumulator, a 12 hour Frequency usually allows the operator to identify changes before limits are reached. Operating experience has shown this Frequency to be appropriate for early detection and correction of off normal trends.

SR 3.5.1.4

The boron concentration should be verified to be within required limits for each accumulator every 31 days since the static design of the accumulators limits the ways in which the concentration can be changed. The 31 day Frequency is adequate to identify changes that could occur from mechanisms such as stratification or inleakage. Sampling the affected accumulator within 6 hours after a 70 gallon increase will identify whether inleakage has caused a reduction in boron concentration to below the required limit. It is not necessary to verify boron concentration if the added water inventory is from the refueling water storage tank (RWST) and the RWST has not been diluted since verifying that its boron concentration satisfies SR 3.5.4.3, because the water contained in the RWST is nominally within the accumulator boron concentration requirements. This is consistent with the recommendation of NUREG-1366 (Ref. 4).

SR 3.5.1.5

Verification every 31 days that power is removed from each accumulator isolation valve operator when the RCS pressure is > 1000 psig ensures that an active failure could not result in the undetected closure of an accumulator motor operated isolation valve. If this were to occur, only two accumulators would be available for injection given a single failure coincident with a LOCA. Since power is removed under administrative control, the 31 day Frequency will provide adequate assurance that power is removed.

REFERENCES

1. FSAR, Chapter 6.
2. 10 CFR 50.46.

(continued)

Question #87

Answer 'c' directs entry into 3.5.1 for 2 inoperable Accumulators. 3.5.1.A Tech Spec has you initiate actions to restore Accumulator to operable while 3.5.1.D directs entry into 3.0.3 for 2 inoperable Accumulators. Tech Spec 3.0.3 allows one hour to start actions to place the unit in Mode 3 within 7 hours. If action 3.5.1.A to restore one Accumulator to operable is complete prior to action taken to start a plant shutdown, a shutdown would not be required.