Draft Submittal
(Pink Paper)

Reactor Operator Written Exam

CRYSTAL RIVER OCTOBER 2007

EXAM NO. 50-302/2007-301

1. 002A3.01 001/2/2/RO#1/C/A 3.7/3.9/NEW/R/CR03701/
With the plant aligned per the drawing below, which ONE of the following choices represents the automatic start functions associated with the RB Sump Pumps?

[Note that the white light labeled WDV-3 is lit]

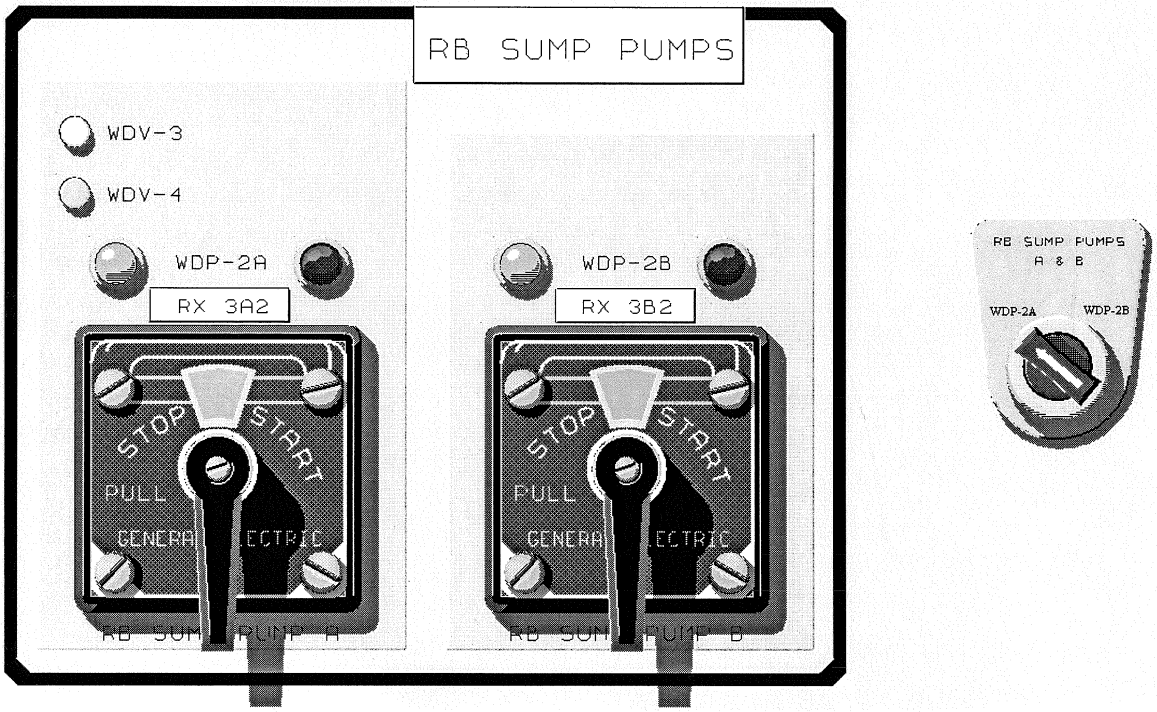

A. WDP-2A will start at 12" and WDP-2B will start at 18".

B. WDP-2A will start at 18" and WDP-2B will start at 12".

C. WDP-2A will start at 12" but WDP-2B will not start.

D.✔ Neither WDP-2A or WDP-2B will automatically start.

Reasons:

A. With the indicated switch positions, if both WDV-3 and WDV-4 were open this would be the expected start setpoints. However, the white light for WDV-4 indicates that it is closed.

B. This would be the expected start setpoints if both WDV-3 and WDV-4 were open and the switch were selected to WDP-2B.

C. Plausible if student believes that WDV-3 and WDV-4 are in parallel rather than in series.

D. Correct. With either WDV-3 or WDV-4 closed (as indicated by the white light not lit) neither RB Sump Pump will start automatically.

OPS 4-59, Obj. 4; OPS 4-59 Section 1-4.0.F and 1-5.0.C

RO - New

Reference(s) provided: None

plug the drain causing additional holdup volume of reactor building spray inventory within the refueling canal.

F. REACTOR BUILDING SUMP PUMPS (WDP-2A AND -2B)

1. WDP-3A and 3B are stainless steel, canned, centrifugal pumps, mounted for submerged operation with their suction centerlines at approximately the 85'elevation in the Reactor Building north sump. Each pump is rated at 100 gpm at 45'TDH.

   a) The pumps are "sewage" type pumps. They have non-clog impellers that can pass any normal debris that may get into the sump without clogging the pump.

2. The motors for WDP-3A and 3B are powered from Reactor MCC-3A2 and Reactor MCC-3B2, respectively.

3. Controls and Interlocks:

   a) The pumps are normally controlled using five position (STOP, NORMAL-AFTER-STOP, START, NORMAL-AFTER-START, PULL-TO-LOCK) spring return to NORMAL control switches located on the ES section of the Main Control Board.

      1) A two position (A, B) maintain position switch located next to the pump control switches is used to select the "Lead" pump.

   b) The "Lead" pump will start if:

      1) Its control switch is in START, NORMAL-AFTER-START or NORMAL-AFTER-STOP, <u>and</u>

      2) Sump level is >86.5' (WD-222-LS), <u>and</u>

      3) WDV-3 is full open , <u>and</u>

      4) WDV-4 is full open.

   c) The "Standby" pump will start if:

1) Its control switch is in START, NORMAL-AFTER-START or NORMAL-AFTER-STOP, and

2) Sump level is >88.5' (WD-222-LS), and

3) WDV-3 is full open , and

4) WDV-4 is full open.

d) The "Lead" and "Standby" pumps will stop if:

1) Their control switches are placed in STOP (the pump will restart when its control switch is released if level is above the low level cut off), or

2) Sump level <85.0' (WD-222-LS), or

3) WDV-3 is not full open, or

4) WDV-4 is not full open

e) The low level sump stop feature can be overridden by holding the pump control switch in the START position.

f) Pump status lights, flowpath mimic and discharge pressure indications are provided on the radwaste control panel.

G. REACTOR BUILDING SUMP PUMP ISOLATION VALVES

1. Sump Pump Discharge Isolation Valve Inside Containment (WDV-3)

a) WDV-3 is powered from ES MCC-3A2.

b) WDV3 is normally operated using a three position (CLOSE, NORMAL, OPEN) spring return to NORMAL control switch located on the ES section of the Main Control Board.

1) The valve can also be controlled using three pushbuttons (OPEN, STOP, CLOSE) located on the MCC.

Instrument	Function	Control/Setpoint
WD-135-LS	Laundry and Shower Sump Pumps Auto Start Signals	WDP-22A Starts at 91.5' Stops at 90.5' WDP-22B Starts 93'
WD-222-LS	RB Sump Pumps Auto Start Signal	Lead Pump Starts 12" Stops 2" Lag Pump Starts 18" Stops 2"
WD-271-LS	Laundry & Hot shower Tank (WDT-11A) Level control for WDP-23A	Low Level Stop ≈5'

NOTE: Instrumentation Listed for "A" train equipment. Other trains will have similar instrumentation.

NOTE: Only selected system instruments are listed in this section. Refer to the Passport Equipment Database, Flow Diagrams, and Instrument Data Sheets, as needed, for Instrumentation not listed.

6.0 SYSTEM INTERRELATIONS

A. CA Provides sodium hydroxide to the neutralizer tank and deborating demineralizers. The chemical addition system also provides the means to sample liquid waste from various components in the system. The liquid waste system provides a means of collecting and processing the drainage and overflows from the chemical addition system.

B. CX The liquid waste system collects and processes liquid from the condensate demineralizer system.

C. DH The liquid waste system instrumentation provides Reactor Building sump level indication.

D. DW Provides demineralized water to the liquid waste system equipment, as required, for line flushing and filling loop seals.

E. ES Provides isolation signals to the liquid waste system containment isolation valves.

F. HT Provides redundant electrical heat tracing of piping containing boric acid.

2. 003A4.03 001/2/1/RO#2/C/A 2.8/2.5/MOD/R/CR03701/4-060-008
Which ONE of the following conditions will cause a white permissive light to be lit for the "D" Reactor Coolant Pump, RCP-1D?

A. Seal injection flow to RCP-1D is 2 gpm.

B. Reactor power is 35%.

C.✔ Lift oil pressure to RCP-1D is 120 psig.

D. RCP-1D SW return flow is 250 gpm.

Reasons:

A. RCP seal injection flow start permissive is > 3 gpm per pump.

B. The Rx power start permissive for RCPs is < 30%.

C. Correct. The white permissive light lit indicates that the permissive is met. The setpoint for lift oil pressure is > 110 psig so the lift oil permissive light would be lit.

D. The SW return flow setpoint is > 260 gpm.

OPS 4-60, Obj. 4; OPS 4-60 Section 1-4.0.I.8; OP-302

RO - Modified

Reference(s) provided: None

8. The reactor coolant pumps are normally operated using five position (STOP, NORMAL-AFTER-STOP, START, NORMAL-AFTER-START, PULL-TO-LOCK) spring return to NORMAL control switches located on the ICS section of the Main Control Board.

   a) Each switch includes red and green pump status indicating lights, an ammeter (% load), and white lights indicating the status of the following reactor coolant pump start permissives: (Figure 4)

      1) Lift oil pressure > 110 PSIG
      2) Seal and motor cooling water (SW) flow > 260 gpm/pump
      3) Upper oil pot level not low
      4) Lower oil pot level not low
      5) Seal flow >3 gpm/pump
      6) Power level <30%
      7) <3 RCPs running AND controlled bleed-off valve open OR RCS temp >441°F AND controlled bleed-off valve open

   b) The permissives can be bypassed using a key lock switch located on the Main Control Board.

   c) When the "AB" transfer switch on the Remote Shutdown Panel is selected to the "RSP" position, all interlocks except lift oil pressure and cooling water flow are by-passed.

   d) Individual red and green reactor coolant pump status lights are provided on the Remote Shutdown Panel. There are no pump controls on the RSP.

9. Each pump has a separate, single speed, top mounted electric drive motor that is connected to the pump by a removable shaft coupling.

   a) A driver support positions the motor above the pump, and has openings to permit access to the pump seals.

   b) Sufficient access and a removable coupling spacer allow pump seal replacement without removal of the motor.

3.1 Setpoints

	DESCRIPTION	VALUE
3.1.12	RCP Start Permissives	• Reactor power < 30% • Oil Lift Pressure > 110 psig • NSCCCW Return Flow > 260 gpm/pump • Upper/Lower Oil Reservoirs NORMAL • Seal Injection Flow > 3 gpm/pump • Controlled Bleed-off Vlv's Opened; MUV-258, 259, 260, 261 • T_c > 441 °F to Start Fourth (4th) RCP
3.1.13	RCP Motor Stator Coil High Temperature	• 145 °C
3.1.14	RCP Seal Flows High/Low	• High: > 42 gpm supply header • Low: < 22 gpm supply header • Low: < 3 gpm/pump
3.1.15	RCP Cooling Water Flow Low	• < 260 gpm SW flow

QUESTION PRIOR TO MODIFICATION

4-60 008/3//0020102003/G2.1.31/4.2/3.9/33-[2/3]/

During a plant startup the following conditions exist:

- RCP-1A, RCP-1B, and RCP-1C are all running.
- RCP-3D, DC lift oil pump for RCP-1D is running.
- All RCP oil reservoirs are at normal level.
- SWP-1C, "C" Nuclear Services Closed Cycle Cooling Pump, is running.
- RCS temperature is 440° F.
- RCS pressure is 1900 psig.
- All RCP seal flows are stable at 14 gpm.

Which of the preceding conditions would cause a white indicating light start permissive to be extinguished for the "D" Reactor Coolant Pump, RCP-1D?

A. RCP lift oil pressure is too high.

B. RCS pressure is too low.

C. RCP seal flow is too high.

D.✔ RCS temperature is too low.

Reasons:

A. Start permissive light would be on even with high pressure.

B. RCP do not have a start permissive for RCS pressure.

C. RCP seal flow is too high, but the start permissive for seal flow is for low flow.

D. Correct, RCS temperature when starting the fourth RCP must be greater than 441°F.

ROT-O-FPCF; LOI99-FPCF; LOI1-T1; LOI2-T6R/T6S; LOI0401T9AR

3. 004A3.15 001/2/1/RO#3/C/A 3.5/3.6/NEW/R/CR03701/
The following plant conditions exist:

- EOP-09 "Natural Circulation Cooldown" is in use.
- RCS Pressure is 340 psig.
- Makeup tank temperature is 130° F.

Actions to align High Pressure Aux Spray per EOP-14, Enclosure 13, are in progress. Given these conditions the number of thermal cycles for the spray line is ___(1)___ and spray flow will be controlled ___(2)___ to control RCS pressure.

A. (1) unlimited
(2) manually

B. (1) unlimited
(2) automatically

C.✔ (1) limited
(2) manually

D. (1) limited
(2) automatically

Reasons:

A. 340 psig corresponds to a pressurizer temperature of 435° F. This exceeds the 300° F limit for unlimited thermal cycles.

B. 340 psig corresponds to a pressurizer temperature of 435° F. This exceeds the 300° F limit for unlimited thermal cycles. There is no automatic control associated with HP Aux Spray.

C. Correct. 340 psig is 365 psia. This corresponds to 435° F, which is a delta-T of 305° F. With delta-T greater than 300° F, thermal cycles would be limited to 15 for the duration of plant life. HP Aux Spray is manually controlled using RCV-53 and MUV-16.

D. There is no automatic control associated with HP Aux Spray.

OPS 4-52, Obj. 9; OPS 4-52 Section 1-4.0.K; EOP-14 Enclosure 13; OP-305, Caution associated with Step 4.2; SP-296

RO - New

Reference(s) provided: Steam Tables

1. During plant operation, other system operations performed include swapping and changing filters, (pre, post, and seal injection) placing demineralizers in and out of service, and the performance of various surveillance procedures. Instructions for performing most normal operations of the MU System are provided in OP-402, Makeup and Purification System.

J. SYSTEM SHUTDOWN

1. The makeup system is kept in operation maintaining pressurizer level and RCP seal injection during shutdown and for most of the plant cooldown.

   a) When RCS temperature decreases below 280°F, the circuit breakers for the non-running makeup pumps and the HPI valves (MUV-23, -24, -25, and -26) are locked, racked out, and red tagged. This is done to limit the possibility of an inadvertent HPI actuation causing an overpressure condition when the RCS is below normal operating temperatures. When the decay heat removal cooler outlet temperature is <120°F and pressure is less than 150 psig, the running makeup pump is stopped and its circuit breaker racked out and red tagged.

K. HIGH PRESSURE AUXILIARY SPRAY

1. The high pressure auxiliary spray line requires some operational limitations depending on the temperature of the pressurizer. If the temperature of the pressurizer is < 300°F above the makeup water temperature, then there is an unlimited number of thermal cycles of this line. If the temperature of the pressurizer is > 300°F above the temperature of the makeup water then a limit of 15 thermal cycles is imposed without further evaluation and fatigue analysis.

2. Operation and use of this spray flow path requires close coordination between the control room and an operator in the Auxiliary Building. DHV-126, RCV-53 and MUV-16 are manipulated to achieve the desired flowrates. RCP seal injection flow must be closely monitored to ensure the proper RCP seal injection flow is maintained.

3. This operation requires that both RCP seal injection filters (MUFL-3A and -3B) be placed in service. Overpressure protection

4.2 RCS Depressurization With High Pressure Aux Spray (Reference)

ACTIONS	DETAILS

CAUTION

Use of this section with spray differential temperature exceeding 300°F is to be used in emergency conditions only and is limited to 15 cycles on the Pressurizer for the life of the plant. The spray differential temperature is the difference between Pressurizer temperature and the temperature of the source of the pressurizer spray water (Makeup Tank or Borated Water Storage Tank) from the MU system.

4.2.1	ENSURE Initial Conditions are met	Initial Conditions: • __ CRS/SSO has approved use of this section _____/_____ CRS/SSO /Date • __ PZR spray via RCV-14 is unavailable due to plant conditions _____/_____ Initial/Date
4.2.2	PLACE second Seal Injection Filter in service	• ENSURE OPEN the following valves: __ MUV-453, MUFL-3A Inlet __ MUV-454, MUFL-3A Inlet __ MUV-457, MUFL-3B Inlet __ MUV-458, MUFL-3B Inlet __ MUV-455, MUFL-3A Outlet __ MUV-456, MUFL-3A Outlet __ MUV-459, MUFL-3B Outlet __ MUV-460, MUFL-3B Outlet _____/_____ Initial/Date
4.2.3	PROTECT normal Aux spray line from over-pressurization	1. __ ENSURE CLOSED DHV-91, DH Isolation to Pressurizer Spray 2. __ PLACE DHV-91 breaker in OFF position, ES MCC 3AB Unit 5C 3. __ VERIFY OPEN DHV-92, PZR Spray Root Valve _____/_____ Initial/Date

4. 004K5.26 001/2/1/RO#4/MEM 3.1/3.2/NEW/R/CR03701/
During normal full power operation a gas space leak occurs in the Makeup Tank (MUT-1) which results in the tank depressurizing to 1 psig. Following this depressurization, NPSH to the running MUP will be:

A. reduced but still adequate. The loss of nitrogen overpressure will allow oxygen to enter the Makeup and Reactor Coolant Systems.

B.✓ reduced but still adequate. The loss of hydrogen overpressure will impact oxygen scavenging.

C. inadequate. The loss of nitrogen overpressure will allow oxygen to enter the Makeup and Reactor Coolant Systems.

D. inadequate. The loss of hydrogen overpressure will impact oxygen scavenging.

Reasons:

A. Nitrogen overpressure would normally be used during an extended shutdown.

B. Correct. The makeup pumps have adequate NPSH as long as the normal level band is maintained. In fact, AR-403 allows for operation below the alarm setpoint of 3 psig, as long as pressure is maintained > 0 psig. During normal operation, hydrogen overpressure is applied for oxygen scavenging.

C. Adequate NPSH can be maintained as long as normal level band is maintained with > 0 psig in the makeup tank. Nitrogen overpressure would normally be used during an extended shutdown.

D. Adequate NPSH can be maintained as long as normal level band is maintained with > 0 psig in the makeup tank.

OPS 4-52, Obj. 7; OPS 4-52 Section 1-4.0.P; OP-103B; OP-402; AR-403

RO - New

Reference(s) provided: None

OPERATIONAL CRITERIA FOR CURVES 8A, 8B &8C

Maximum Makeup Tank Operating Pressure vs Level (NOCS 100350)

MAKEUP TANK OPERATING PRESSURE AND ALARM LIMITS

- The **PREFERRED REGION** is an area below and to the right of the **COMPUTER ALARM** and equal to or greater than 16 psig.
- The **ANNUNCIATOR ALARM** is a variable alarm based on a Pressure/Volume relationship for the makeup tank and initiates at 2.12 psi below the design limit curve at a level of 55 inches.
- The **COMPUTER ALARM** is a variable alarm based on a Pressure/Volume relationship for the makeup tank and initiates at 3.12 psi below the design limit curve at a level of 55 inches.
- The **ACCEPTABLE REGION** is below the **ANNUNCIATOR ALARM** above '0' psig and encompasses the **PREFERRED REGION**. It is bounded by the Low and High Level alarms (55" & 100") respectively.
- Makeup Tank Pressure should be maintained above '0' psig during normal operating conditions, and during venting evolutions. This will prevent damage to the MUT during a draw-down from a design basis accident.

MAKEUP TANK OPERATING LEVEL AND ALARM LIMITS

- Operating in the **RESTRICTED REGION**, exceeding the MUT **HIGH** (100") and **LOW LEVEL** (55") alarm setpoints will require action in accordance with the appropriate Alarm Response procedure(s).
- The **COMPUTER ALARM** is provided to alert the operator that the makeup tank pressure is approaching the annunciator alarm. Exceeding the computer alarm does not require any immediate action.

GENERAL REQUIREMENTS AND COMMENTS

- Operating in the **PREFERRED** region should provide adequate hydrogen concentration ($\geq$25 cc/kg) in the RCS if makeup tank pressures are consistently maintained in this area.
- Exceeding the **ANNUNCIATOR ALARM** will require operator action in accordance with the appropriate Annunciator Response Procedure. This area is considered a **RESTRICTED REGION**.
- Operation outside the **PREFERRED REGION** is acceptable during plant maneuvering. However, under steady state conditions, efforts should be made to operate in the **PREFERRED REGION**.
- The **UNACCEPTABLE REGION** is on or above the **DESIGN LIMIT** curve. Operation in the **UNACCEPTABLE REGION** shall require an evaluation in accordance with CAP-NGGC-0200, Corrective Action Program.
- The **DESIGN LIMIT** curve is based on instrument error for pressure and level as read from MU-14-LIRI.
- The **DESIGN LIMIT** curve is based on Engineering Calculation M94-0053, Rev. 5

PSA-H ANNUNCIATOR RESPONSE	PSA-Z-04-06	**H-04-06**

MAKEUP TANK PRESS HIGH/LOW

EVENT POINT 1063

INDICATED CONDITION:

- MAKEUP TANK PRESSURE < 3 PSIG AS SENSED BY MU-17-PS.

REDUNDANT INDICATION WHICH WILL VERIFY ALARM:

- MU-014-LIR1, MUT LEVEL/PRESSURE RECORDER.

OPERATOR ACTIONS FOR A VALID ALARM:

- ENSURE MUV-134 CLOSED.
- INCREASE PRESSURE WITHIN LIMITS OF MAKEUP TANK PRESSURE/LEVEL CURVE OF OP-103B.

DISCUSSION:

- MUT PRESSURE MAY BE TEMPORARILY REDUCED BELOW 3 PSIG DURING VENTING EVOLUTIONS, BUT SHOULD BE MAINTAINED ABOVE 0 PSIG.

REFERENCES: DRAWING 208-041-MU-47.

SENSING ELEMENT: MU-17-PS.

3.0 PERSONNEL INDOCTRINATION

3.1 Setpoints

	DESCRIPTION	VALUE
3.1.1	Makeup Tank [NOCS 100350]	
	a. MUT High Level Alarm	• 100 inches
	b. MUT Low Level Alarm	• 55 inches
	c. MUT Low-Low Level Interlock	• 21 inches positions MUV-112 to MUT
	d. MUT Low-Low Level Interlock and Alarm	• 18 inches opens MUV-58 and MUV-73
	e. MUT High Temperature Alarm	• 135°F
	f. MUT Low Temperature Alarm	• 95°F
	g. MUT High Pressure Alarm	• Refer to curve 8A, 8B or 8C of OP-103B, Plant Operating Curves
	h. MUT Low Pressure Alarm	• 3 psig (Advisory only, NOT an ITS or design basis alarm)
3.1.2	Makeup Pumps	
	a. MUP Inboard Bearing High Temp Alarm	• 190°F
	b. MUP Outboard Bearing High Temp Alarm	• 170°F
	c. MUP End Gear Bearing High Temp Alarm	• 165°F
	d. MUP End Center Bearing High Temp Alarm	• 165°F
	e. MUP and Motor Lube Oil Low Pressure Alarm	• 5 psig
	f. MUP Motor Inboard Bearing High Temp Alarm	• 180°F
	g. MUP Motor Outboard Bearing High Temp Alarm	• 180°F
	h. MUP Motor Stator High Temp Alarm	• 126°C
	i. MUP Gear Oil Pressure Low Alarm	• 7 psig

P. MAKEUP TANK (MUT-1)

1. The makeup tank is a 600 cubic foot capacity tank located on the 119' elevation of the Auxiliary Building.

2. The makeup tank serves as a receiver for letdown, seal return, chemical additions, and system makeup. It also acts as a surge tank to accommodate small changes in RCS volume, and provides suction to the makeup pumps.

3. During normal operation, letdown is sprayed into the top of the tank into a hydrogen atmosphere. The water will absorb the hydrogen, which will combine with any dissolved oxygen in the water when it passes through the high radiation field in the reactor core. This is the primary method of controlling the dissolved oxygen concentration in the RCS during power operation.

4. Makeup Tank Pressure Control

   a) OP-103B, Heatup/Cooldown Curves, contains curves that indicate the design limit, and annunciator and computer alarms based on makeup tank pressure versus tank level.

      1) The curve limits the hydrogen overpressure in the makeup tank to prevent the tank contents from being emptied following an ES actuation, allowing hydrogen gas to enter the suction of the HPI pumps and interrupt HPI flow.

      2) A Main Control Board annunciator alarm (set at design pressure limit minus 3 psig) will alert control room personnel that the MUT-1 pressure limit as defined in curve 8 of OP-103B has been exceeded and that the tank is being operated in the unacceptable region. A computer alarm (design pressure limit minus 4 psig) is provided to alert control room personnel that the allowable MUT-1 pressure limit is being approached.

   b) Pressure in the tank is reduced by venting the tank to the waste gas system through MUV-134.

      1) MUV-134 is an air operated control valve operated from the PSA section of the Main Control Board

SYSTEM		REQUIREMENT/FUNCTION
DH	Decay Heat Removal System	The BWST is the source of borated water for high pressure injection to the Reactor Vessel. The DH System in conjunction with the MU System filters and demineralizers may provide purification of the Reactor Vessel and Fuel Transfer Canal inventory. The DH System provides suction for the MU Pumps following a small break LOCA when the BWST is exhausted and the RC System pressure is above the shutoff head of the DH Pumps. The MU System provides another source of auxiliary pressurizer spray water via a cross connection between the RC pump seal injection and the DH auxiliary spray lines. The alternative recirculation flow path discharges into the reactor building sump.
DW	Demineralized Water System	The DW System provides makeup water (unborated) to the MU Tank and also provides rinse water for the MU Demineralizers.
	Electrical Power (Including Emergency Diesel Generators)	The Electrical Power System provides Class 1E and non-Class 1E power to MU System electrical components.
ES	Engineered Safeguards	The ES Actuation System (ESAS) automatically actuates MU System pumps and valves during emergency conditions to ensure automatic initiation of high pressure injection and containment isolation.
HT	Heat Tracing System	The HT System prevents boron precipitation in portions of the MU System contacting the concentrated boric acid.
HY	Hydrogen System	The HY System provides a cover gas for the MU Tank for the purpose of scavenging oxygen within the RC System.
IA	Instrument Air System	Instrument Air is used to operate pneumatic valves throughout the MU System.
NG	Nitrogen System	Nitrogen is supplied to the MU Tank and MU Demineralizers for purge operations or nitrogen blankets during long term shutdowns.

5. 005K5.09 001/2/1/RO#5/C/A 3.2/3.4/NEW/R/CR03701/
The following plant conditions exist:

- The plant is being shutdown and cooled down for maintenance.
- All RCPs have been secured.
- RCS temperature is 150° F.
- RCS pressure is 250 psig.

It is desired to secure both DHPs for 30 minutes. Given the requirements (1-3) below, which combination of requirements must be met to allow this activity?

(1) Ensure core outlet temperature will remain subcooled for the duration.
(2) Ensure no activities which could reduce RCS boron occur.
(3) Ensure no RCS drain activities occur.

A. (2) only

B.✔ (1) and (2) only

C. (1) and (3) only

D. (1), (2), and (3)

Reasons:

A. This would be the only requirement per LCO 3.9.4 if the plant were in Mode 6 with refueling canal level at least 156'.

B. Correct. The plant is in Mode 5 with the loops filled. Under these circumstances, LCO 3.4.6 would apply. This LCO has a note allowing both DHPs and all RCPs to be secured for up to 1 hour, as long as requirements (1) and (2) above are met.

C. Under these circumstances RCS drain activities would not be specifically prohibited and activities that would lower RCS boron are prohibited.

D. These requirements would need to be met per LCO 3.4.7 if the loops were not filled. Given that RCS pressure is still 250 psig the loops are filled.

OPS 4-54, Obj 10; OPS 5-01 Obj. 8; OPS 4-54 Section 1-10.0.C; ITS LCO 3.4.6

RO - New

Reference(s) provided: None

3.4 REACTOR COOLANT SYSTEM (RCS)

3.4.6 RCS Loops – MODE 5, Loops Filled

LCO 3.4.6 One decay heat removal (DHR) loop shall be OPERABLE and in operation, and either:

a. One additional DHR loop shall be OPERABLE; or

b. One steam generator (OTSG) shall be OPERABLE.

----------NOTES----------

1. The DHR pump of the loop in operation may be de-energized for ≤ 1 hour per 8 hour period provided:

   a. No operations are permitted that would cause reduction of the RCS boron concentration; and

   b. Core outlet temperature is maintained so as to assure subcooling throughout the RCS.

2. One required DHR loop may be inoperable for up to 2 hours for surveillance testing provided that the other DHR loop is OPERABLE and in operation.

3. All DHR loops may be removed from operation during planned heatup to MODE 4 provided at least one RCS loop is in operation.

APPLICABILITY: MODE 5 with RCS loops filled.

3.4 REACTOR COOLANT SYSTEM (RCS)

3.4.7 RCS Loops—MODE 5, Loops Not Filled

LCO 3.4.7 Two decay heat removal (DHR) loops shall be OPERABLE and at least one DHR loop shall be in operation.

----------NOTES----------

1. All DHR pumps may be de-energized for ≤ 1 hour per 8 hour period provided:

   a. Core outlet temperature is maintained so as to assure subcooling throughout the RCS.

   b. No operations are permitted that would cause reduction of the RCS boron concentration; and

   c. No draining operations to further reduce the RCS water volume are permitted.

2. One DHR loop may be inoperable for ≤ 2 hours for surveillance testing provided that the other DHR loop is OPERABLE and in operation.

APPLICABILITY: MODE 5 with RCS loops not filled.

ACTIONS

CONDITION	REQUIRED ACTION	COMPLETION TIME
A. One or more DHR loop(s) inoperable.	A.1 Initiate action to restore DHR loop(s) to OPERABLE status.	Immediately

(continued)

3.9 REFUELING OPERATIONS

3.9.4 Decay Heat Removal (DHR) and Coolant Circulation-High Water Level

LCO 3.9.4 One DHR loop shall be in operation.

----------NOTE----------
The required DHR loop may be removed from operation for ≤ 1 hour per 8 hour period, provided no operations are permitted that would cause reduction of the Reactor Coolant System boron concentration.

APPLICABILITY: MODE 6 with the refueling canal water level ≥ 156 ft Plant Datum.

ACTIONS

CONDITION	REQUIRED ACTION		COMPLETION TIME
A. No DHR loop in operation.	A.1	Suspend operations involving a reduction in reactor coolant boron concentration.	Immediately
	AND		
	A.2	Suspend loading irradiated fuel assemblies in the core.	Immediately
	AND		
	A.3	Initiate action to restore DHR loop to operation.	Immediately
	AND		
			(continued)

6. 006A4.08 001/2/1/RO#6/C/A 4.2/4.3/BANK/R/CR03701/4-013-014
The following plant conditions exist:

- A plant heatup and pressurization are in progress.
- LPI ES actuation bistables are currently tripped and bypassed.
- Current RCS pressure is 300 psig.

Which ONE of the following describes the expected plant response of the LPI ES actuation bistables if *no* operator action is taken?

A. LPI will actuate when RCS pressure reaches the 500 psig LPI Actuation bistable setpoint.

B.✓ LPI will actuate when RCS pressure reaches the 900 psig LPI Bypass bistable reset setpoint.

C. LPI will ***not*** actuate when RCS pressure reaches the 500 psig LPI Actuation bistable setpoint if all channels of RPS are still selected to Shutdown Bypass.

D. LPI will ***not*** actuate when RCS pressure reaches the 900 psig LPI Bypass bistable setpoint if all channels of RPS are still selected to Shutdown Bypass.

Reasons:

A. LPI will not actuate until the 900 psig Bypass bistables automatically reset.

B. Correct. LPI will actuate at 900 psig if the Actuation bistables have not been reset.

C. LPI will not actuate until the 900 psig Bypass bistables automatically reset and RPS Shutdown bypass will not stop the ES actuation.

D. RPS Shutdown bypass will not stop the ES actuation.

OPS 4-13, Obj. 2; OPS 4-13 Sections 1-5.0.F.14 and 1-7.0.B.2

RO - Bank

Reference(s) provided: None

p) One of the three HPI Manual Test Group Switches is placed in Test, disabling the other 2 groups from actuating.

q) When the HP Inj Man Act (PB1/RCAH) pushbutton is depressed, actuation of the group matrix can be verified on the ES actuation relay cabinets as was done during automatic initiation testing.

r) The HPI Manual Test Group 1 switch is a spring return to OFF switch and therefore must be held in the TEST position until the HP Inj Man Act pushbutton has been depressed and released. Otherwise all three groups will be actuated.

s) The manual test is reset using the HP Inj Man Test Reset pushbutton that breaks the seal in circuit for the manual actuation auxiliary relays.

14. LPI Actuation (Figure 19)

a) LPI utilizes the same bistable actuation scheme as HPI. The actuating bistable is set at 500 psig, and the bypass bistable is set at 900 psig.

b) LPI is divided into three groups.

1) Group 1 relays control the LPI valves (DHV-5 and DHV-34),

2) Group 2 controls the LPI pump,

3) Group 3 controls EFP-1.

c) LPI also can be initiated by an RBIC actuation by relay 63Y/RB*W.

1) Any RBIC signal will actuate the valves (group one); however, groups two (LPI pumps) and three (EFP-1 trip) will depend upon the status of off site power.

d) Group 2 will always be actuated by a 500 psig or a manual actuation, but will only be actuated by a cascade from

f) Resetting RBIC actuation.

2. OP-202, Plant Heatup, provides guidance on placing the ES system in service during a plant heatup.

a) During a plant heatup, several operations are required to prevent an inadvertent ES actuation. The following sequence is a summation of the actions required by OP-202.

1) When RC pressure is >500 psig, the operator must manually reset the three LPI trip bistables.

- The reset will illuminate the bypass/reset permit light, indicating that the channel can be reset without causing an actuation.

2) The operator should then reset the six LPI bypass/reset switches, which will extinguish the channel bypass and light the green bypass/reset light.

3) When RC pressure reaches 900 psig, the automatic reset feature of the bypass will reset, illuminating the green channel function enabled light.

- If the trip bistable has not been reset and the bypass manually or automatically reset, this action will remove the channel bypass with the channel still tripped, causing both HPI and LPI to be actuated.

4) When RC pressure is >1625 psig the operator must manually reset the three HPI trip bistables.

- The reset will illuminate the bypass/reset permit light, indicating that the channel can be reset without causing an actuation.

5) The operator should then reset the six HPI bypass/reset switches, which will extinguish the channel bypass and light the green bypass/reset light.

7. 006K4.21 001/2/1/RO#7/C/A 4.1/4.3/BANK/R/CR03701/4-013-001
The following plant conditions exist:

- A controlled plant shutdown is in progress.
- RCS pressure is 250 psig.
- RCS temperature is 200° F.
- EFP-1 is running to support post-maintenance testing.
- An RCS leak occurs.
- You elect to depress the LPI manual actuation pushbuttons.

Based on the above conditions what would be the expected status of DHP-1A & 1B?

A.✓ Neither DHP will start.

B. Both DHPs will start immediately.

C. DHP-1B will start immediately. DHP-1A will not start until EFP-1 is tripped.

D. Both DHPs will start 15 seconds following the manual actuation in their normal block loading sequence.

Reasons:

A. Correct. Due to the given conditions the student must realize that both HPI and LPI have been bypassed. A manual initiation of the LPI actuation system will not start the decay heat pumps unless the HPI SEAL IN is present (Block 4 Loaded). These pumps will have to be started using the manual start switches or by actuating the HPI system.

B. & D. Due to the given conditions the student must realize that both HPI and LPI have been bypassed. A manual initiation of the LPI actuation system will not start the decay heat pumps unless the HPI SEAL IN is present (Block 4 Loaded). These pumps will have to be started using the manual start switches or by actuating the HPI system.

C. Refer to above reason for the first part of the distractor. The second portion of the distractor refers to an interlock in effect only if a LOOP is present.

OPS 4-13, Obj. 2; OPS 4-13 Section 1-2.0.D, Table 2, Table 4

RO - Bank

Reference(s) provided: None

b) All of the valves that are actuated by the HPI diverse isolation signal are also actuated by the RBIC signal.

c) Following a manual actuation of HPI, diverse isolation can be initiated using the test switches in the ES cabinets.

D. LOW PRESSURE INJECTION (LPI)

1. Low pressure injection (LPI), which is an integral part of the decay heat removal system, uses two decay heat pumps and two decay heat coolers and has provisions to align coolant injection from the BWST or the Reactor Building sump.

2. LPI will be initiated by a decreasing reactor coolant system pressure signal at 500 psig, or an increasing Reactor Building pressure signal at 4 psig.

3. The LPI system, which is designed to provide core cooling for larger break sizes, operates independently of and in addition to HPI.

4. When an actuation signal occurs on two of three channels, LPI flow to the core will be aligned through two separate flow paths, each including a pump and heat exchanger.

   a) The initial injection of water will be from the BWST.

   b) With all pumps running and the maximum break size, this mode will last a minimum of 35 minutes.

5. When the BWST reaches a low level, the suction of the LPI pumps must be swapped from the BWST to the Reactor Building sump to establish the recirculation mode of cooling.

6. A bypass switch is provided for each low pressure injection train to enable the operator to bypass the channel for normal shutdown or for recovery from an actual actuation.

   a) The bypass can be initiated from the Main Control Board or from the ES 4160V switchgear room.

   b) When RC pressure is below 900 psig, the bypass bistable allows use of the manual bypass switch to bypass the output of the 500 psig trip bistables.

c) When two of three channels in each system of actuation are bypassed, the LPI actuation is prevented from being actuated by a 500 psig reactor coolant system pressure signal.

d) LPI can still be actuated by the 4 psig Reactor Building pressure signal.

7. Equipment is actuated in accordance with Table 4.

8. The LPI system has a manual actuation pushbutton for each train of actuation ("A" and "B"). Depressing the two pushbuttons will position the LPI valves to their ES position.

9. A manual initiation of the LPI actuation system will not start the decay heat pumps unless an HPI seal-in is present (Block 4 loaded).

a) Following a manual actuation, the pumps will have to be started using their manual start switches or by actuating the HPI system.

E. REACTOR BUILDING ISOLATION AND COOLING SYSTEM (RBIC)

1. The RBIC system is designed to limit the post-accident Reactor Building pressure within design values.

2. Emergency cooling of the Reactor Building is performed using the same equipment that provides normal heat removal.

3. Under post-accident emergency cooling conditions, the Reactor Building cooling units will operate at a reduced speed with the heat being rejected to the nuclear services closed cycle cooling system (SW).

4. A Reactor Building pressure signal of 4 psig on any two of three Reactor Building pressure switches will initiate Reactor Building isolation and cooling.

5. RBIC closes all fluid line penetrations not required for operation of the emergency core cooling systems.

1-14.0 TABLE 2 - HPI ACTUATION

Circuit	Time (Seconds)	A Train	B Train	Position
DIVERSE (1)	0	See Table 6	See Table 6	See Table
BLOCK 1	0	MUP-1A or 1B (2)	MUP-1B or 1C (2)	Running
		MUV-23	MUV-25	Open
		MUV-24	MUV-26	Open
		MUV-586	MUV-586	Open
		MUV-587	MUV-587	Open
		AHF-1A or 1C (FAST) (3)	AHF-1B or 1C (FAST) (3)	Off
		MUV-53	MUV-257	Closed
		MUV-73	MUV-58	Open
		EDG "A"	EDG "B"	Run
		480V UV Lockout (4)	480V UV Lockout	Armed
		ES HPI Flow Alarms (5)	ES HPI Flow Alarms (5)	Armed
BLOCK 2	5	AHF-1A or 1C (SLOW) (3)	AHF-1B or 1C (SLOW) (3)	Running
		RWP-2A	RWP-2B	Running
BLOCK 3	10	AHF-15A	AHF-15B	Running
		SWP-1A	SWP-1B	Running
BLOCK 4	15	DHP-1A	DHP-1B	Armed (6)
BLOCK 5	20	RWP-3A	RWP-3B	Running
BLOCK 6	25	DCP-1A	DCP-1B	Running
		BSP-1A	BSP-1B	Armed (7)

(1) Actuation of HPI via the 1625 psig bistable will initiate diverse containment isolation circuit. Actuation by the manual pushbutton or cascade from LPI or RBIC will not actuate this circuit.

(2) "B" MUP may be selected to either train as the ES pump

(3) Selector switches are located in ES Cabinets 4D and 5D in the CR, to provide selection of AHF-1A or 1C from the "A" Train or likewise, selection of AHF-1B or 1C from "B" Train. This will ensure that only one Reactor Building Fan is automatically connected to an EDG. The start logic such is set up that on an actuation, only one fan will be running in slow speed. This logic is biased to start the "A" train selected fan first ("B" fan will start if the "B" train precedes the "A" train actuation by at least 6 seconds.

(4) Lockout will be actuated if ES is coincident with undervoltage condition. See table II.

(5) ES HPI flow alarms do not seal in and therefore will not be functional when HPI is bypassed or reset.

(6) LPI actuation required for pump start.

(7) BS actuation required for pump start.

1-16.0 TABLE 4 - LPI ACTUATION

A Train	B Train	Position	Notes
DHP-1A	DHP-1B	Run	Requires HPI Permissive
DHV-5	DHV-6	Open	
DHV-34	DHV-35	Open	
Flow Alarm	Flow Alarm	Armed	Does Not Seal In

1-17.0 TABLE 5 - BS ACTUATION

A Train	B Train	Position	Notes
BSP-1A	BSP-1B	Run	Requires HPI Permissive
Flow Alarm	Flow Alarm	Armed	Does Not Seal In

8. 007A2.02 001/2/1/RO#8/C/A 2.6/3.2/NEW/R/CR03701/
While operating at 100% power the RCDT pressure is observed to be reading abnormally high at 6 psig. Attempts to reduce RCDT pressure via venting were unsuccessful. Which ONE of the following choices represents the consequence of this condition and the appropriate method for reducing pressure?

A.✔ Diversion of RCP seal leakoff to the RB sump.
Blowdown the loop seal using N2.

B. Diversion of RCP seal leakoff to the RB sump.
Raise SW flow to the RCDT.

C. PORV setpoint shift.
Blowdown the loop seal using N2.

D. PORV setpoint shift.
Raise SW flow to the RCDT.

Reasons:

A. Correct. Pressures > 4 psig in the RCDT can cause the RCP seal leakoff standpipes to overflow to the RB sump. The proceduralized method for correcting this condition is to first attempt to vent the RCDT. If this is unsuccessful, the procedure directs an attempt to blowdown the loop seal using nitrogen.

B. SW flow to the RCDT is not normally adjusted, and this method is not procedurally directed.

C. The PORV lifts based on an electronic pressure input to a solenoid valve, not a differential pressure across the valve.

D. The PORV lifts based on an electronic pressure input to a solenoid valve, not a differential pressure across the valve. SW flow to the RCDT is not normally adjusted, and this method is not procedurally directed.

OPS 4-59, Obj. 5; OP-407J Limit and Precaution 3.2.3.

RO - New

Reference(s) provided: None

3.2 Limits and Precautions

	LIMIT	BASIS
3.2.1	For work located in Radiation Controlled Areas, due consideration must be given to the ALARA program. This may result in a determination that special preparations and/or precautions are necessary	Personnel protection
3.2.2	WDP-7/8 discharge pressure should be maintained between 43 – 53 psig	Pump runout
3.2.3	RCDT vent path is susceptible to developing a loop seal within 24 – 48 hours after steam producing activities, resulting in higher than normal pressure in the RCDT. RCDT pressures > 4 psig may cause diversion of RCP seal leak off to the RB sump and/or anomalies in RCDT level indication. Section 4.8 (preferred) may be used to reduce RCDT pressure. If unsuccessful, Section 4.5 may be used to blow down the loop seal	Personnel awareness

9. 008AK3.03 001/1/1/RO#9/MEM 4.1/4.6/NEW/R/CR03701/
A step in EOP-3, Inadequate Subcooling Margin, states:

IF ES MCC 3AB is NOT energized, THEN energize ES MCC 3AB.

This step is necessary to provide power to ensure the ___(1)___ is closed and is necessary ___(2)___.

A.✓ (1) PORV block valve
(2) because ES MCC 3AB lacks an auto transfer

B. (1) PORV
(2) because ES MCC 3AB lacks an auto transfer

C. (1) PORV block valve
(2) if ES MCC 3AB auto transfer function failed

D. (1) PORV
(2) if ES MCC 3AB auto transfer function failed

Reasons:

A. Correct. The PORV block valve is powered from ES MCC 3AB and the bus does not have any auto transfer feature.

B. The solenoid for the PORV is energize to open and is powered from 125VDC DPDP-4B.

C. ES MCC 3AB does not have an auto transfer function.

D. The solenoid for the PORV is energize to open and is powered from 125VDC DPDP-4B. Also, ES MCC 3AB does not have an auto transfer function.

OPS 5-85 Obj. 2; EOP-TBD Cross Step Document for EOP-3; OPS 4-90 1-4.0.N.3.

RO - New

Reference(s) provided: None

EOP Step: 3.15
TBD Step: 8.0 **Section:** III.B **Deviation Type:** None
Generic Deviation: GD-23
Justification: None
Step Basis:

The basis for this step is to make all attempts to isolate potential RCS leak paths. Grouping them into one step simplifies the procedure. Overall letdown isolation and pressurizer sample valves are not addressed in this step because they were closed earlier in the EOP. Overall letdown isolation is addressed by a specific step, while the pressurizer sample valves were addressed when ES actuated or when Rule 1 was verified. The letdown cooler inlet isolation valves are closed to isolate a potential leak in a letdown cooler, or upstream of the containment isolation valves. ESMCC 3AB is verified energized to provide power to the PZR spray and PORV block valves. The details have provisions not to close the PORV or PORV block valves if HPI PORV cooling is in progress.

Setpoint Code: None **Setpoint Value**: None
References: None

EOP Step: 3.16
TBD Step: 9.0 **Section:** III.B **Deviation Type:** None
Generic Deviation: GD-23
Justification:

None

Step Basis:

EOP-07 is not a direct entry procedure. Entry is based on directed branching. The actions for EOP-3 are similar to EOP-7 in the early stages of ICC. Inadvertent entry into ICC actions, due to instrument errors, is not detrimental from a core cooling perspective. Inadvertent entry, due to instrument and pressure errors, may prevent transferring to appropriate cooldown instructions if erroneous ICC indications persist. Due to this potential problem, the superheat limits associated with SPDS have accounted for instrument uncertainty. Superheat is not a stable condition. Therefore, if actual core uncovery is in progress the degrees superheat will not be a stable indicated value.

Setpoint Code: RC072 **Setpoint Value**: RCS Superheat Conditions
References: 1. NOCS 002550

EOP Step: 3.17 Note
TBD Step: None **Section:** None **Deviation Type:** Add
Generic Deviation: GD-23
Justification:

The note is added to provide information HPI flow may affect diagnosis of excessive heat transfer.

Step Basis:

The note is added to provide information HPI flow may affect diagnosis of excessive heat transfer

Setpoint Code: None **Setpoint Value**: None
References: None

EOP Step: 3.17
TBD Step: 13.0 **Section:** III.B **Deviation Type:** Substitute
14.0 III.B None
Generic Deviation: GD-23

3. ES MCC 3AB supplies ES loads which are either common to both ES trains or are capable of being selected to either train.

   a) Transferring power supplies for ES MCC 3AB can be accomplished from either the Main Control Room or the "A" ES 480V switchgear room. Push buttons and light indications are provided at both locations.

   b) There are no automatic transfers associated with ES MCC 3AB. An electrical interlock prevents transferring the MCC to a dead bus.

      1) Guidance for swapping power supplies to ES MCC 3AB is provided in OP-703.

O. INTERLOCKS/PROTECTION SCHEMES

1. Cross-tie Blocking (Figure 11)

   a) Crosstie blocking interlocks are a protective scheme associated with all ES 4160V bus feeder breakers. The primary function of the crosstie blocking interlocks is to prevent the emergency diesel generators from being operated in parallel, where a single malfunction could disable both generators.

   b) Crosstie blocking is accomplished by monitoring breaker contacts and blocking the close circuit of any breaker that, if closed, would cause the EDGs to be crosstied. "Crosstie blocking not in effect" is a close permissive for all of the breakers that can supply power to the ES 4160V buses.

      1) As an example, if breaker 3210 ("B" EDG output breaker) is closed and any pair of breakers from a single transformer (Backup ES, Offsite Power or Unit Auxiliary) is closed, relay AZ is energized.

         - Energizing relay AZ will open a contact in the close string for breaker 3209, preventing closure of the breaker.

   c) The crosstie blocking indications (Figure 12) located on the SSF section of the Main Control Board display the status of the crosstie blocking circuit.

10. 008K3.02 001/2/1/RO#10/MEM 2.9/3.1/NEW/R/CR03701/
The air supply line to SWV-763 (CRDM Temperature Control Valve) fails causing a loss of air to the valve.

SWV-763 will fail ___(1)___ and the Control Rod Drives may experience ___(2)___.

A.✓ (1) open
(2) excessive moisture due to condensation

B. (1) open
(2) insulation damage due to overheating

C. (1) closed
(2) excessive moisture due to condensation

D. (1) closed
(2) insulation damage due to overheating

Reasons:

A. Correct. On a loss of air the valve will fail open. This will allow more flow through the stators and less recirc flow. This will lead to overcooling which could cause moisture and condensation in the stators.

B. Plausible if the student believes the temperature control valve is in the 'recirc' portion of the line, which would lead to excessive warm water recirc to the suction and overheating.

C. The valve actually fails open. Plausible if the student believes that the temperature control valve is in the 'recirc' portion of the line, which would prevent recirc of the warmer water back to the suction.

D. The valve actually fails open. Plausible since if the valve did fail closed, insulation damage due to overheating would be possible.

OPS 4-56, Obj. 4 & 7; OPS 4-56 Section 1-4.0.F.6; OP-411 Enclosure 7

RO - New

Reference(s) provided: None

LOSS OF INSTRUMENT AIR EQUIPMENT FAILURE MODES

Equipment ID	Description	Failed Position
SCV-23	SC to LO cooler	Open
SCV-145	SCP recirc	Open Note-1
SCV-146	DW to SCT-1	Closed
SDV-1	SDT-1 to settling pond	Closed
SUV-1	AS to FWT-1 for S/U and warmup	Open
SUV-9	AS to DFT	Open
SWV-12	SW to misc	Closed Note-1
SWV-35, SWV-37, SWV-39	SW to RB fans	Open Note-1
SWV-41, SWV-43, SWV-45	SW to RB fans	Open Note-1
SWV-47, SWV-48, SWV-49, SWV-50	SW to letdown coolers	Closed
SWV-79, SWV-80, SWV-81, SWV-82, SWV-83, SWV-84, SWV-85, SWV-86	SW to RCPs	Closed Note-1
SWV-109, SWV-110	SW to CRDMs	Closed Note-1
SWV-151, SWV-152	CI to RB fans	Closed Note-1
SWV-277	DW to SWT-1	Closed Note-1
SWV-355	CI from RB fans	Closed Note-1
SWV-763	CRDM Temperature Control	Open
TDV-1, TDV-2, TDV-3, TDV-4, TDV-5, TDV-6, TDV-7, TDV-8, TDV-9, TDV-10	MS line drains	Open
TDV-16	FWP-2A steam line drain	Open
TDV-23	FWP-2B steam line drain	Open
TDV-26	FWP-2A steam line drain	Open
TDV-30	FWP-2B steam line drain	Open
TDV-32, TDV-33	FWP steam line drain	Closed
TDV-40	MS line drain	Closed
WDV-147	Conc Boric Acid WDT-8A Recycle	Open
WDV-150	Conc Boric Acid WDT-8B Recycle	Open
ALL OTHER WDVs	Waste disposal valves	Closed
WSV-3, WSV-4, WSV-5, WSV-6	RB Hydrogen monitoring	Closed

Note-1: Indicated component has an Air Reservoir; time period until air is lost may vary due to reservoir size, air usage and air leaks.

3. The SW leaving the cooler flows to the post accident sampling system coolers where it is used to reduce the temperature of the fluid to be analyzed. The SW exiting CAHE-5/6 is returned to the SW system.

F. NUCLEAR SERVICES CLOSED CYCLE COOLING BOOSTER PUMPS (SWP-2A and SWP-2B)

1. The SW booster pumps provide the additional head required to supply cooling water flow to each of the 68 CRD stator water jacket assemblies.

   a) The additional head requirements result from the high pressure drop through the water jackets, and small pipe diameter of the multiple parallel flow paths leading into and out of the water jackets.

2. The pumps are located on the 95' elevation of the Auxiliary Building near the "B" decay heat pit. Each pump is rated at 200 gpm at 215' TDH, which exceeds the CRD stator cooling water flow requirements. The pump motors are air-cooled.

3. SWP-2A and SWP-2B are powered from 480V Reactor MCC 3A2 and 480V Reactor MCC 3B2, respectively.

4. The pump control switches, which are located on the ES "AB" section of the Main Control Board have five positions: STOP, NORMAL-AFTER-STOP, START, NORMAL-AFTER-START and PULL-TO-LOCK. A local start/stop pushbutton station is located above the pumps.

5. Indication of SWP-2A/2B discharge pressure is available on the ES "AB" section of the Main Control Board.

6. Control Features and Interlocks:

   a) The non-running SW booster pump will auto start if the flow from the in-service pump is less than 140 gpm for greater than 2 seconds.

b) In order to prevent energizing the CRDs with no cooling water to the stator jackets, the CRD circuit breakers cannot be closed unless SW flow to the stator water jackets is at least 140 gpm. This interlock is for the breaker closing coils only. If the breakers are closed and a loss of flow occurs to the stators, there is no "open" signal sent to the breakers.

c) CRDM SW Temperature Control

1) SW inlet temperature to the CRD stators is maintained above the recommended minimum of 80°F using a recirculation line from the discharge of the CRD stator water jacket coolers to the suction of the CRDM booster pumps and a temperature control valve (SWV-763) located on the stator common outlet line.

2) SWV-763, which is controlled by SW-224- TIC, maintains SW inlet temperature to the CRD stators at 85°F by "choking" the stator discharge flow. This causes the backpressure in the discharge line to increase above the 135 psig pressure of the SW supply header, allowing a portion of the SW leaving the stators to recirculate directly to the suction of the SW booster pumps. This warmer discharge water raises the overall temperature of the SW supply to the CRDs.

3) SWV-763 is equipped with a mechanical gag to limit valve travel in the closed direction. The gag, which will keep the valve open a minimum of 15%, prevents overheating of the stators by ensuring a minimum supply flow of approximately 47 gpm. This flow will keep CRD stator temperatures below 130°F with an SW stator inlet temperature of 85°F. The gag will allow sufficient throttling of SWV-763 to control the SW inlet temperature to the stators at setpoint with an SW system temperature of 45°F.

4) SWV-763 is located on the 119' elevation of the Auxiliary Building in the vicinity of RMA-6.

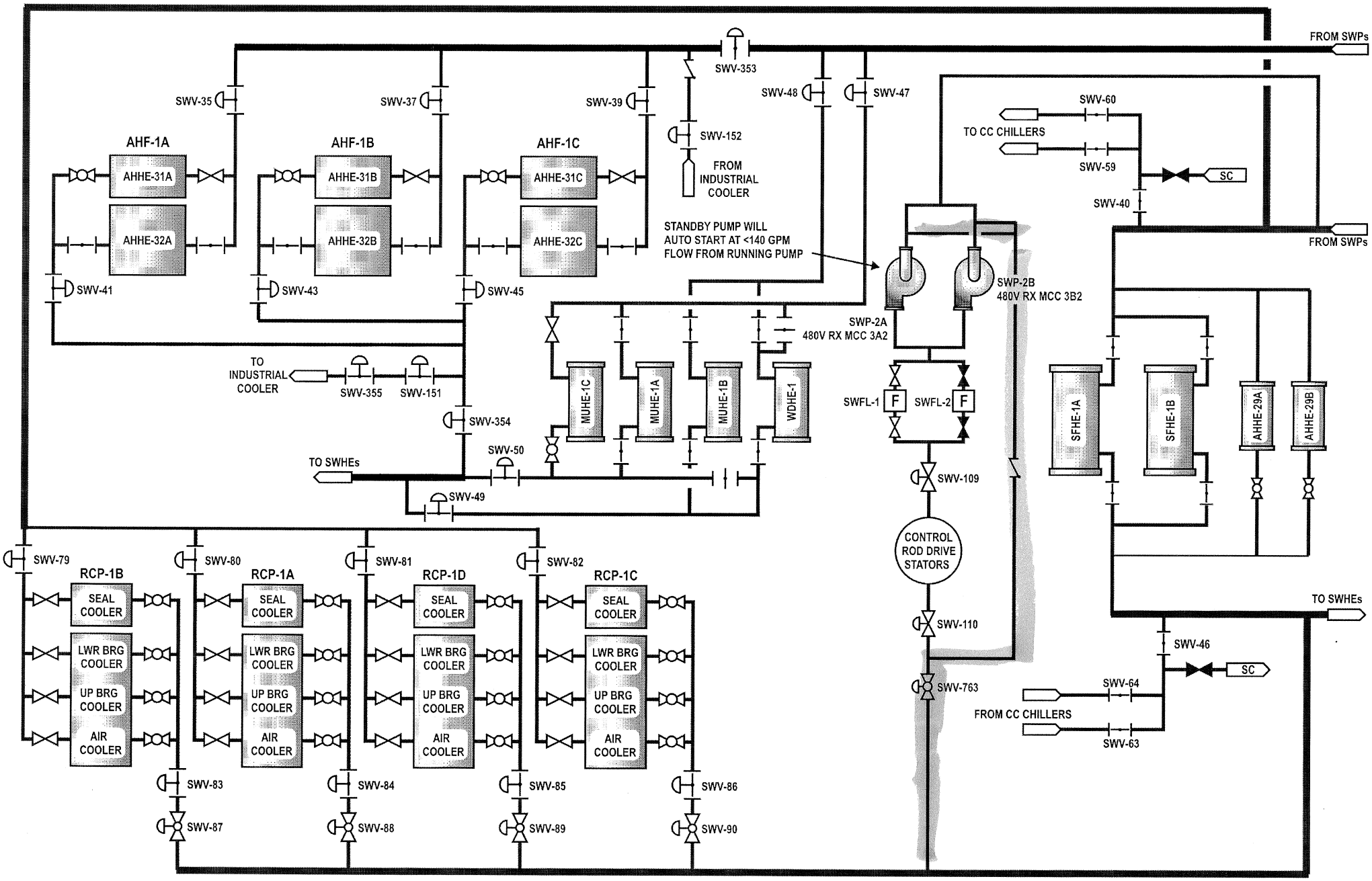

Figure 2 - SW System Flowpaths

11. 009EK2.03 001/1/1/RO#11/C/A 3.0/3.3/NEW/R/CR03701/

The plant has experienced an RCS leak of approximately 150 gpm. A cooldown to Mode 5 is in progress, with RCS temperature at 460°F. The RCS temperature 60 minutes ago was 535°F.

The cooldown rate is ___(1)___ and the cooldown rate ___(2)___.

A. (1) excessive
(2) cannot be controlled due to HPI/break cooling

B. (1) excessive
(2) can be controlled by adjusting TBVs or ADVs

C. (1) acceptable
(2) cannot be controlled due to HPI/break cooling

D.✓ (1) acceptable
(2) can be controlled by adjusting TBVs or ADVs

Reasons:

A. The cooldown rate is 75°F per hour, which is less than the 50°F per 1/2 hour limit. Also, EOP-8A contains a note that cooldown may be excessive due to HPI flow. However, this note would apply to much larger breaks.

B. The cooldown rate is 75°F per hour, which is less than the 50°F per 1/2 hour limit.

C. Plausible since EOP-8A contains a note that cooldown may be excessive due to HPI flow. However, this note would apply to much larger breaks.

D. Correct. The cooldown rate is acceptable at 75°F per hour (37.5°F per 1/2 hour). With a LOCA of 150 gpm, some HPI/break cooling would occur, but OTSG heat removal would still be required.

OPS 3-21, Obj. 2; EOP-8A Table 2; OPS 3-21 Section 1-2.0.B.5.b) 2); OPS 3-21 Section 1-5.0.C

RO - New

Reference(s) provided: None

Table 1:
Required OTSG levels

"LLL"	> 20 in	≥ 1 RCP running with adequate SCM
"NAT CIRC"	> 70%	No RCPs running with adequate SCM
"ISCM"	> 90%	Inadequate SCM

Table 2:
Cooldown rate limits

Conditions	RCS TEMP	Rate
Normal Cooldown	> 280°F	≤ 50°F/½ hr
	≤ 280°F to >150°F	≤ 25°F/½ hr
Head Void	NA	≤ 25°F/½ hr

Table 3:
OTSG Tube to Shell
ΔT Limits

Tensile ΔT Limit (Avg Tshell – Tcold)	≤ 100°F
Compressive ΔT Limit (Thot – Avg Tshell)	≤ 60°F

Table 4:
Maximum RCS PRESS
for DHR operation

RCPs Operating	RC-147-PI	RC-148-PI
A Loop	170 psig	215 psig
B Loop	215 psig	165 psig
No RCPs	215 psig	215 psig

Table 5:
Minimum adequate
SCM target values

RCPs Running	RCPs not Running
15°F	30°F

b) Small breaks that stabilize at approximately secondary side pressure (**Table 4 and Figures 21, 22, and 23**)

1) When the break size is smaller than the previous example, the leak rate and consequently the energy removal rate of the break decreases. The smaller breaks cannot remove energy from the primary system fast enough to allow for continuous depressurization. Following the circulation phase of the transient, the system will stabilize at or near the secondary side pressure.

2) For these breaks, the OTSGs (which are important for this size break) can remove a significant amount of the core decay heat by condensing primary system steam (boiler-condenser cooling) within the tube region, reducing RCS pressure. During these size LOCAs it is important to raise the OTSG levels to the inadequate subcooling margin (ISCM) setpoint.

3) Because the RCS pressure remains high, HPI cooling is the only ECC system available until the system depressurizes further (operator action is required). As system pressure decreases (due to the operator controlled cooldown) the ECCS will flow at a higher rate and refill becomes more likely. However, refill may not occur until the RCS pressure is reduced to the point where LPI begins adding water to the system.

c) Small breaks that may repressurize in a saturated condition (**Table 5 and Figures 24, 25 and 26**)

1) For breaks of this size, the loss of coolant mass and energy is sufficient to initially depressurize the RCS and result in enough steam formation to interrupt loop circulation. When the flow stops and the coolant "settles out", the RCS may gradually repressurize. The repressurization, which may reach the safety valve setpoint, occurs because the break flow is not large enough to depressurize the

C. Subcooled Cooldown

1. If the RCS has adequate subcooling margin, the plant can be cooled down in a near normal manner in order to establish long-term cooling. The RCPs should be started if the plant is in a subcooled natural circulation condition on at least one OTSG.

2. A steam bubble can be drawn in the pressurizer, if needed, and HPI flow matched to break flow.

3. If the break is an unisolable steam space leak, a solid plant cooldown will be required. HPI flow and RCS temperature (with OTSG cooling) must be coordinated in order to maintain a controlled depressurization.

4. During the plant cooldown, the BWST level should be monitored, and LPI pumps started in piggyback if required to maintain RCS inventory.

D. Saturated Cooldown

1. In this mode, OTSG pressure will control RCS temperature and pressure. When steam pressure is reduced, the RCS temperature and pressure will decrease as long as coolant steam can be condensed in the OTSG tube region. For a saturated cooldown, maintaining the OTSG levels at the ISCM setpoint is required, as previously discussed. HPI flow cannot be throttled as long as adequate subcooling margin is lost.

2. The RCS may refill and reestablish subcooling margin during a saturated .This may occur because:

   a) Leak flow will decrease and HPI flow increase as RCS pressure is reduced.

   b) Decay heat is slowly decreasing.

3. BWST level should be monitored and the LPI pumps started in piggyback if required to maintain RCS inventory.

4. If the RCS remains in a saturated condition the CFTs should not be isolated unless their contents have been depleted or sufficient LPI flow has been established.

3.0 FOLLOW-UP ACTIONS (CONT'D)

ACTIONS	DETAILS

NOTE

Cooldown rate may be excessive due to HPI flow.

3.20 ___ Ensure RCS cooldown is in progress.	• ___ **CONCURRENTLY PERFORM** EOP-14, Enclosure 15, EOP Temperature Log (RCS TEMP). • ___ IF all the following exist: ___ ICC Region 3 previously entered ___ Adequate SCM ___ No RCPs running THEN maintain cooldown rate < 5°F/½ hr. • ___ IF cooldown rate is excessive, THEN control OTSG PRESS using TBVs or ADVs. See Table 2 • ___ Adjust TBVs (preferred) or ADVs to achieve desired cooldown rate. See Table 2

EOP Step: 3.20 Note
TBD Step: None **Section:** None **Deviation Type:** Add
Generic Deviation: None
Justification:

The note adds information that the cooldown rate may be excessive due to HPI flow.

Step Basis:

The note adds information that the cooldown rate may be excessive due to HPI flow. The next step will ensure RCS cooldown is in progress and within allowable limits. A LOCA could have high cooldown rates based on the LOCA size and HPI flow.

Setpoint Code: None **Setpoint Value**: None
References: None

EOP Step: 3.20
TBD Step: 18.0 **Section:** IV.A **Deviation Type:** Add
18.1 IV.A Add
Generic Deviation: None
Justification:

CR3 contains additional guidance to maintain cooldown rate less than 5°F/½ hr if ICC region 3 was previously entered are based on FPC commitments to the NRC. The concern is that a hydrogen bubble in the reactor head, resulting from zirconium water reaction, could expand into the loops and block natural circulation if the RCS were depressurized too fast. Limiting the cooldown rate limits the depressurization rate.

The CR3 step would try to limit the cooldown to the ITS limits for both saturated and subcooled RCS conditions. Also the action to limit the cooldown for situation where a reactor head void exists is defined in another step.

The CR3 guidance meets the intent of the GEOG to ensure the appropriate cooldown rate is established.

Step Basis:

This step will ensure RCS cooldown is in progress. If EOP-08A was entered from EOP-03, EOP-06 or EOP-07, then a cooldown would have already been in progress. If EOP-08A was directly entered from EOP-02 or EOP-04, then a cooldown would be initiated at this point in the procedure. The instructions include specific guidance related to limitations on cooldown rate following entry into ICC region 3. In other cases the cooldown rate is to be controlled in accordance with the limits provided in the referenced table.

A cooldown rate limit is specified for post-ICC cooldowns, if ICC region 3 was entered. This rate is based on FPC commitments to perform a slower cooldown if cooling down on natural circulation following ICC. FPC committed to this limitation as part of the reactor vessel head vent exemption (Post TMI Modification). In this situation, significant quantities of non-condensible gases might be present in the RCS, both in solution and in the form of a bubble under the reactor vessel head. The slower cooldown rate limits the rate of non-condensible gases coming out of solution or expanding into the loops and possibly blocking natural circulation. If RCPs are operating, this is not a concern.

The ITS cooldown limits are provided in the referenced table.

Setpoint Code: RC111 **Setpoint Value**: < 5°F/½ hr RCS Cooldown

12. 010K3.03 001/2/1/RO#12/C/A 4.0/4.2/MOD/R/CR03701/4-009-005
The following plant conditions exist:

- A normal plant cooldown is in progress.
- RCS pressure is 1550 psig.
- Control Rod Group 1 is fully withdrawn.

The RCS narrow range pressure SASS module output fails high. With no operator action which ONE of the following describes the resulting plant response?

A. RPS bistable trip on low pressure.

B. RPS bistable trip on high pressure.

C. HPI bistable trip.

D.✓ LPI bistable trip.

Reasons:

A. Actual RCS pressure will lower with this failure. However, with the given plant conditions RPS must be in shutdown bypass. This will prevent the trip on RCS low pressure.

B. With the failure occurring at the SASS modules RPS would still see actual RCS pressure. No RPS bistable trip on high pressure would occur.

C. Pressure is already below the HPI bypass and actuation setpoints. HPI would have been bypassed already on a normal shutdown and would not actuate.

D. Correct. This failure will cause the PORV to open which will cause actual RCS pressure to lower. With no operator action, RCS pressure will lower to the LPI actuation setpoint. At a pressure of 1550 psig, LPI would not yet be bypassed so LPI would actuate.

OPS 4-09, Obj. 4 & 7; OPS 4-09 Section 1-4 and Figure 5

RO - Modified

Reference(s) provided: None

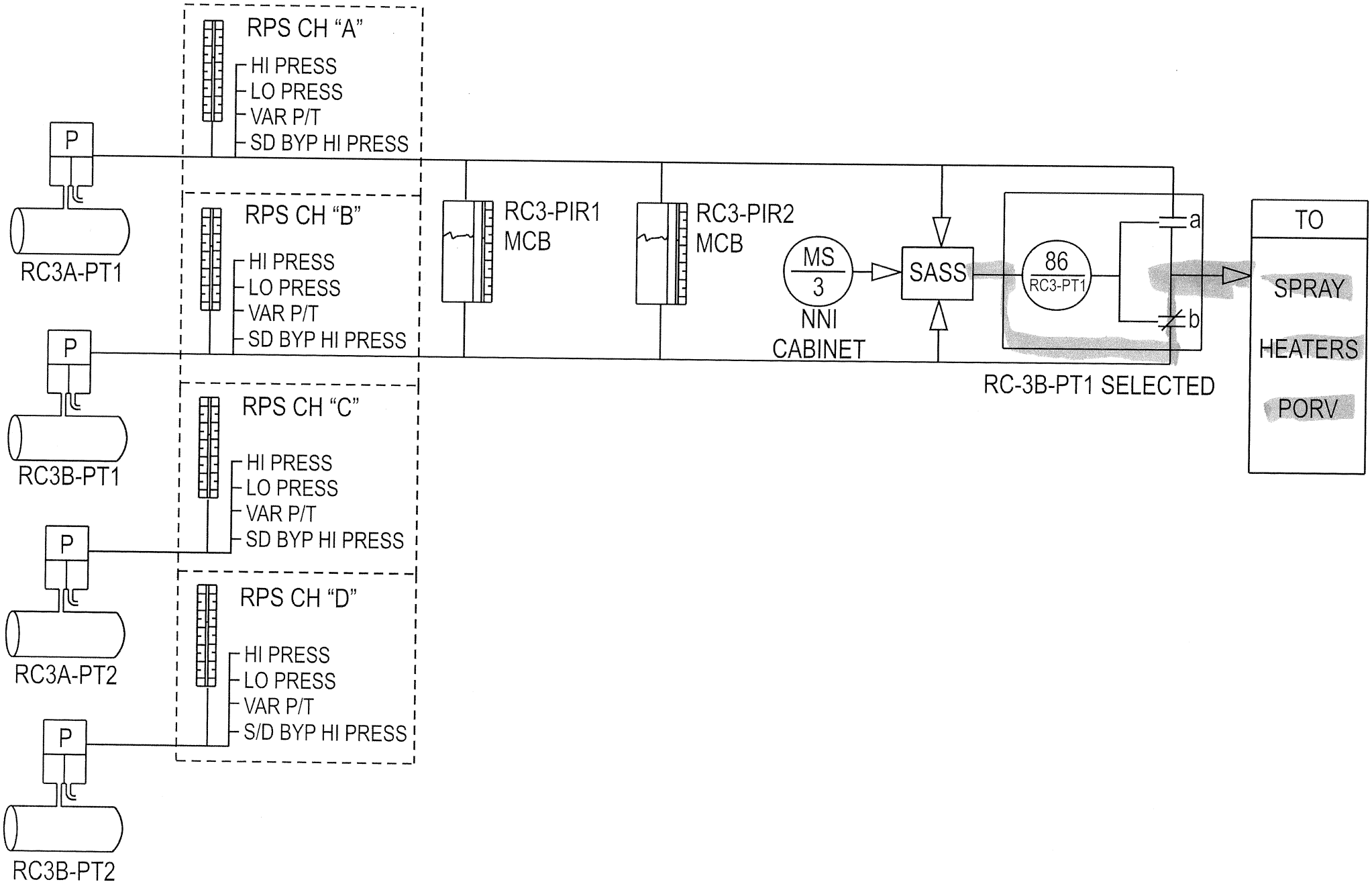

FIGURE 5 - Rev 1 - RCS NARROW RANGE PRESSURE INSTRUMENTATION

Location	Type	Source	Range	Selectable
MCB	Meter	TE1 OR TE2	0 - 700°F	Yes
Remote Shutdown Panel	Meter (Dual Scale)	TE1 AND TE2	0 - 700°F	No

D. RCS PRESSURE (RC3) (Figure 5, Figure 6, Figure 7)

1. RCS pressure is monitored by several different systems using different ranges. The specific ranges monitored and the associated transmitters can be grouped as follows:

Transmitter	System(s)	Common Nomenclature	Range
RC3A-PT1 RC3A-PT2 RC3B-PT1 RC3B-PT2	RPS NNI	NARROW RANGE	1700 - 2500 psig
RC3A-PT3 RC3A-PT4 RC3B-PT3	ES NNI	WIDE RANGE	0 - 2500 psig
RC-131-PT	NNI	LOW RANGE COOLDOWN	0 - 600 psig
RC-132-PT	NNI ACI	LOW RANGE COOLDOWN	0 - 600 psig
RC-147-PT RC-148-PT	REMOTE SHUTDOWN NNI ACI	RSP LOW RANGE	0 - 600 psig
RC-158-PT RC-159-PT	REMOTE SHUTDOWN DSS	RSP WIDE RANGE	0 - 3000 psig

2. Transmitters

a) The RCS pressure transmitters are located ≈ 2/3 of the way up either the "A" or "B" loop hot leg. In order to minimize penetrations into the RCS piping, multiple pressure transmitters are supplied fed from a single pressure tap.

1) As a result, the failure of a pressure tap will result in the failure of multiple pressure transmitters.

b) All RCS pressure transmitters are Rosemount ΔP type transmitters. The high side tap is attached to the RCS pressure tap and the low pressure tap is vented to the Reactor Building atmosphere.

1) As a result, during low RCS pressure conditions with elevated Reactor Building pressures, RCS pressure indication will read low by the amount of Reactor Building pressure.

c) The transmitters for RPS, ES, RSP and NNI are qualified for a hostile environment.

3. RPS Transmitters (RC3A-PT1, RC3A-PT2, RC3B-PT1, and RC3B-PT2)

a) These transmitters are narrow range (1700 to 2500 psig), environmentally qualified, ΔP transmitters.

b) Each transmitter, which is powered from the same power supply as the channel it feeds, supplies an RCS pressure signal to one RPS channel.

1) RC3A-PT1 supplies the "A" RPS channel and is powered from VBDP-3.

2) RC3A-PT2 supplies the "C" RPS channel and is powered from VBDP-5.

3) RC3B-PT1 supplies the "B" RPS channel and is powered from VBDP-4.

4) RC3B-PT2 supplies the "D" RPS channel and is powered from VBDP-6.

c) Within each RPS channel, the transmitter supplies the signal for all RCS pressure related trips. These include:

1) High pressure,

2) Low pressure,

3) Variable-pressure/temperature, and

4) Shutdown bypass high pressure.

d) The pressure signal supplied to each channel is indicated on a buffer amplifier located on row 2 of cabinet 2 (A2, B2, C2, or D2) for that channel.

e) In the "A" and "B" RPS channels the pressure signal is directed through a buffer amplifier to two dual indicating recorders on the ICS section of the Main Control Board and to the alarms for high RCS pressure (2255 psig) and low RCS pressure (2055 psig).

1) The "A" input to each recorder is supplied by RC3A-PT1 and the "B" input is supplied from RC3B-PT1.

2) The two pressure signals are directed through buffer amplifiers to a switch located in the NNI cabinets. This switch is used to select the NNI control signal used by the PORV, pressurizer spray valve and pressurizer heaters.

3) SASS monitors these signals and will switch the control signal on a transmitter failure.

4. ES Transmitters (RC3A-PT3, RC3A-PT4, and RC3B-PT3)

a) These transmitters are wide range (0 to 2500 psig), environmentally qualified, ΔP transmitters.

b) Each transmitter supplies RCS pressure to one ES pressure bistable, and is powered from the ES power supplies.

c) Indication is provided in each ES channel cabinet for the associated transmitter.

d) In the ES cabinets, the transmitters provide all RCS pressure actuation signals (HPI, LPI, and Diverse Containment Isolation).

QUESTION PRIOR TO MODIFICATION

4-09 005/3,4,7//0160102003/027AA1.01/4.0/3.9/33-[2/3]/

The selected RCS narrow range pressure transmitter fails high. SASS does not transfer. Which of the following describes the resulting plant response?

A. ES Channel 1 will actuate.

B. Channel A of the Diverse Scram System (DSS) will actuate.

C. RCS pressure will lower slowly because the PZR heaters are receiving a false high pressure signal.

D.✓ RCS pressure will lower rapidly because RCV-14, RCS Spray valve, and RCV-10, PORV, are receiving a false high pressure signal.

Reasons:

A. Wide range pressure transmitters feed the ES system. This failure has no effect on ES.

B. This transmitter does not feed DSS so no actuation will occur.

C. The PZR heaters are receiving a false high pressure signal however RCS pressure will decrease rapidly due to the Spray valve and PORV opening.

OPS 4-09 Section 1-4 and Figure 5; KA #'s 027AA2.11 4.0/4.1, 010K1.03 3.6/3.7, 010K3.01 3.8/3.9, 010K4.03 3.8/4.1, 010A3.02 3.6/3.5, 016K1.08 3.4/3.4, 016K3.08 3.5/3.7; Task # 0020402013

NRCM; LOI1-T5; LOI2-T7AR/T7AS; LOI2-T7BR/T7BS; LOI2-Audit; LOI0401T7R

13. 011EA1.12 001/1/1/RO#13/C/A 4.1/4.4/NEW/R/CR03701/
The following plant conditions exist:

- A Large Break LOCA has occurred.
- Some fuel damage has occurred.
- ECCS suction transfer to RB sump has just been completed.
- Alarm Window H-02-02 "Atmospheric Monitor Warning" is received.
- RM-A8 "Aux Bldg Exhaust Duct" counts are rising with the "Warn" light lit.

Uncontrolled radiation leakage to the environment is limited by Aux Bldg Ventilation supply isolation which:

A. was performed in EOP-14 Enclosure 19 "ECCS Suction Transfer."

B. occurred as a result of the Low Pressure Injection (LPI) Actuation.

C. will occur when RM-A8 reaches the high alarm setpoint.

D.✓ will occur when RM-A2 reaches the high alarm setpoint.

Reasons:

A. EOP-14, Enclosure 19, contains no steps related to Aux Bldg ventilation.

B. Aux Bldg ventilation receives no isolation signals from an LPI Actuation.

C. RM-A8 has no automatic functions associated with it.

D. Correct. When RM-A2 reaches the high alarm setpoint, AHF-30, 11A/B, 10, 9A/B will all stop. This ensures a negative pressure is maintained in the Aux Bldg which ensures activity will be released through the monitored/filtered AHF-14 fans.

OPS 4-25, Obj. 4; OPS 4-25 Section 1-4.0.F.4.h), OPS 4-86 Section 1-2.0.D.1; AP-250

RO - New

Reference(s) provided: None

- The operation of the monitors and the LMH valve controllers is covered in lesson plan OPS-4-58, Primary Chemical Addition, Sampling, PASS and Heat Tracing.

g) RM-A1 interlocks (high radiation alarm or high flow alarm):

1) Closes AHV-1A, 1B, 1C, and 1D (Reactor Building purge supply and exhaust valves)

2) Closes LRV-70, 71, 72, and 73 (Reactor Building vent valves)

h) RM-A2 interlocks (high radiation alarm or high flow alarm):

1) Trips AHF-10 (fuel handling area fan)

2) Trips AHF-11A and 11B (Auxiliary Building supply fans)

3) Trips AHF-9A and 9B (penetration cooling fans)

4) Trips AHF-34A (hot machine shop welding hood exhaust fan and cooling unit)

5) Trips AHF-30 (chemistry lab supply fan)

6) Closes WDV-436, 437, 438 (WGDT outlet isolation valves to the release header)

5. Group Two consists of RM-A3 (Auxiliary Building Exhaust Duct Waste Gas Area), RM-A4, Fuel Handling Building Ventilation Duct, RM-A7 (Nuclear Sample Room Exhaust Duct), and RM-A8, (Auxiliary Building Exhaust Duct). The sampling enclosures for the channels are located in the following areas:

Detector	**Location**
RM-A3	95' elevation of the Auxiliary Building by the waste evaporator room
RM-A4	143' elevation of the Auxiliary Building in the charcoal filter room

1. During an emergency resulting in high radiation in the Auxiliary Building exhaust vent, radiation monitor RM-A2 will cause the supply fans to stop, but leave the exhaust fans running.

   a) This will further increase the negative pressure in the Auxiliary Building, preventing uncontrolled leakage to the environment.

2. High radiation in the waste gas surge tank area (RM-A3) will close the supply and exhaust dampers to the area and stop the auxiliary building supply fans.

3. High radiation in the fuel handling area (RM-A4) will stop fuel area supply fan AHF-10.

E. The system is designed to maintain Auxiliary Building temperature above a minimum of 55° F and below a maximum of 122° F.

1. The minimum temperature is based on freeze protection and personnel comfort.

2. The maximum temperature is based on electrical equipment environmental considerations.

F. The heating and ventilation control (HVAC) section of the Main Control Board contains the necessary controls for remote operation of all subsystems except the decay heat closed cycle cooling units.

1. The decay heat closed cycle cooling units operate automatically in conjunction with the associated decay heat closed cycle cooling pumps in the event of an ES actuation. They can also be manually from the ES A and B sections of the Main Control Board.

G. Control air for operation of system components is supplied by the plant instrument air system through local air handling panels.

Table 1:
RM Auto Actions

RM-A2 GAS		
Stopped:	___ AHF-11A	___ AHF-11B
	___ AHF-9A	___ AHF-9B
	___ AHF-30	___ AHF-10
RM-A3		
Stopped:	___ AHF-11A	___ AHF-11B
RM-A4		
Stopped:	___ AHF-10	
RM-A5 GAS/IODINE		
Closed:	___ AHD-17	___ AHD-2C
	___ AHD-22	___ AHD-2E
	___ AHD-12	___ AHD-1C
	___ AHD-12D	___ AHD-1E
Open:	___ AHD-3	
Stopped:	___ AHF-19A	___ AHF-19B
	___ AHF-17A	___ AHF-17B
Stopped, or slow speed.	___ AHF-20A	___ AHF-20B
IF AHF-20A and AHF-20B are stopped, THEN ensure stopped.	___ AHF-44A	___ AHF-44B
	___ AHF-30	

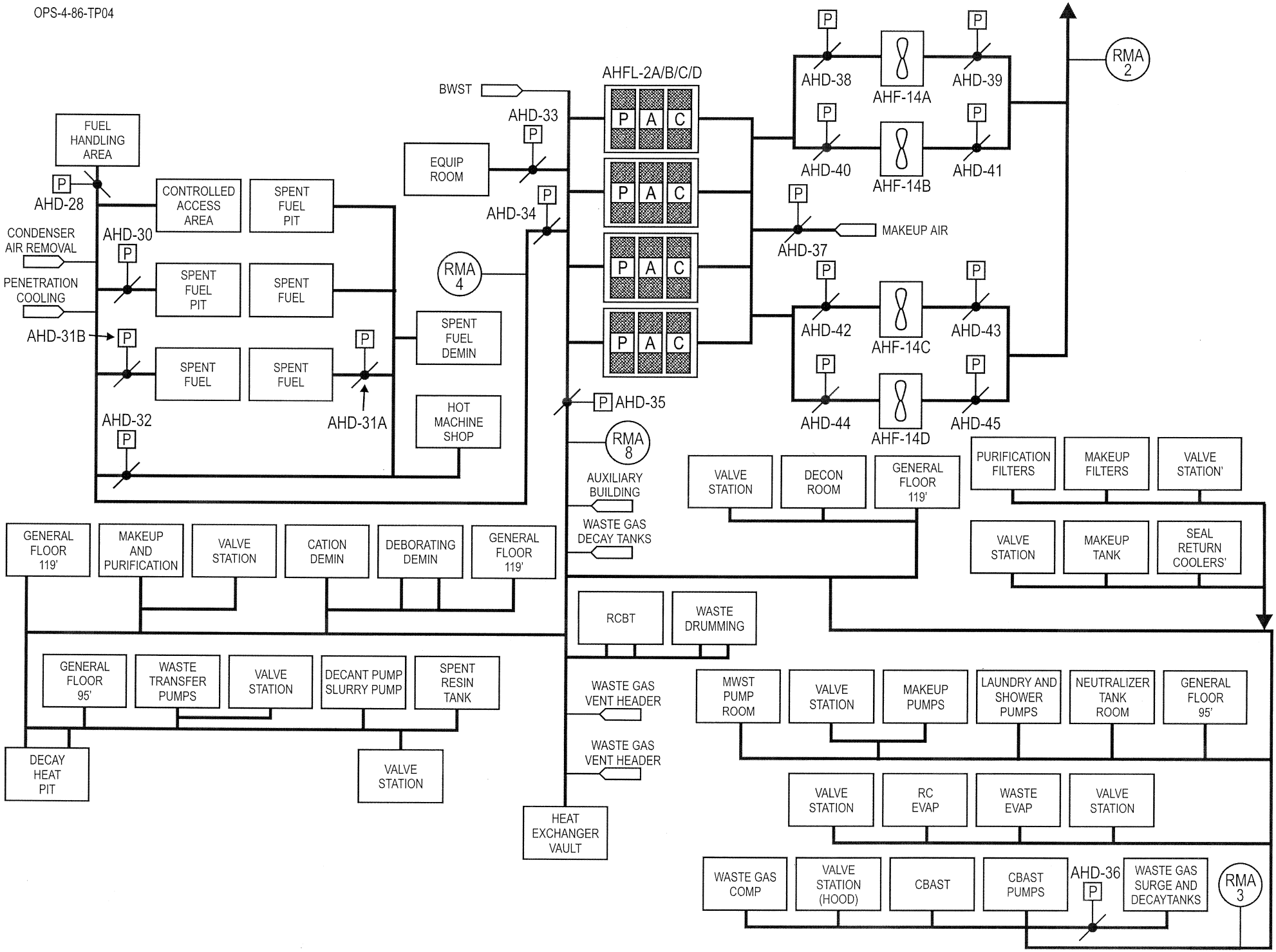

FIGURE 2 Rev. 1 - AUXILIARY BUILDING VENTILATION SYSTEM

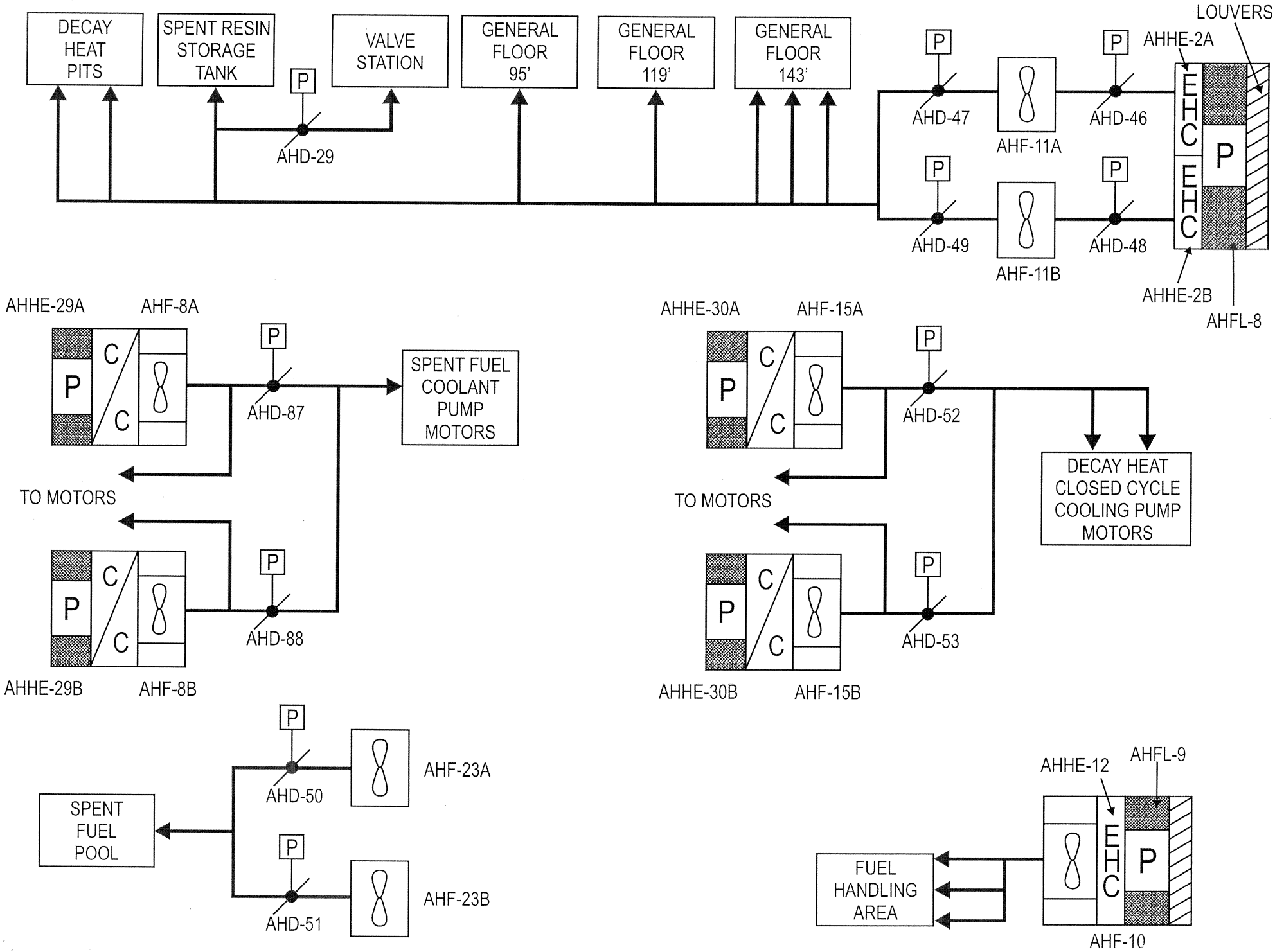

FIGURE 1 Rev 1 - AUXILIARY BUILDING VENTILATION SUPPLY SYSTEM

14. 012A1.01 001/2/1/RO#14/MEM 2.9/3.4/BANK/R/CR03701/4-012-026
The following plant conditions exist:

- RCS Pressure is 920 psig.
- Cooldown to Mode 5 in progress.
- All RPS channels in Shutdown Bypass.
- Group 1 Control Rods fully withdrawn.

A transient occurs which results in an uncontrolled rise in RCS pressure. All RPS channels fail to trip at the high pressure setpoint associated with shutdown bypass operation.

Which ONE of the following statements describes the next RCS high pressure trip protection which is required/available as pressure continues to rise?

A. Shutdown Bypass automatically changes the RPS high pressure trip setpoint to a lower value; no overpressure trip protection remains and a manual trip will be required.

B. The associated RPS channels will come out of bypass and other trip setpoints will actuate and trip the channel when RCS pressure exceeds the trip setpoint associated with Shutdown Bypass.

C.✓ A second high pressure trip bistable with a setpoint higher than the Shutdown Bypass high pressure trip setpoint will actuate and trip the RPS channels.

D. No automatic actions will occur until pressure reaches the Diverse Scram System actuation setpoint. At that point Group 1 rods will be de-energized.

Reasons:

A. Shutdown Bypass does not bypass the RPS high pressure trip contact set at 2355 psig or adjust its setpoint to a lower value.

B. RPS channels do not come out of bypass when trip functions are exceeded.

C. Correct. The 2355 psig high pressure trip contact is still functional in the RPS trip string and will actuate to trip the associated RPS channels.

D. An RPS automatic trip will occur at 2355. This is below the DSS setpoint. Also, if the groups 1 rods are on the DC Hold bus, DSS will not trip them.

OPS 4-12, Obj. 4; OPS 4-12 Section 1-3.0.C.3

RO - Bank

Reference(s) provided: None

and voltage being supplied to the pump and converting these inputs to power readings (kW).

2) Each RCPPM develops a voltage output signal based on its input signals.

- If the output voltage signal from an RCPPM drops below the value corresponding to three reactor coolant pumps in operation, the associated trip string contact will open and interrupt power to the channel trip relay.

3. In addition to the trip bistable contacts discussed above, the following components are included in each RPS trip string:

a) Shutdown Bypass Switch

1) The shutdown bypass switches (one per channel) are key operated switches located on the individual channel shutdown bypass modules. Each key switch has two positions:

- Normal - places the normal string of trip contacts in the channel trip string. The shutdown bypass high RCS pressure trip is bypassed.

- Shutdown Bypass – bypasses the normal trip contacts for Flux/Delta Flux/Flow, Variable Low Pressure, RCS Low Pressure, and Reactor Coolant Pump Power Monitor, and places the shutdown bypass high reactor coolant system high pressure trip (1820 psig) contact in service for the associated channel. It also bypasses the EFIC actuation on a loss of both main feedwater pumps.

2) If RCS pressure exceeds 1820 psig with the RPS channel in shutdown bypass, the associated trip string contact will open and interrupt power to the channel trip relay.

15. 013K4.12 001/2/1/RO#15/MEM 3.7/3.9/NEW/R/CR03701/
The following plant conditions exist:

- RCS Pressure 1920 psig.
- A cooldown to Mode 5 is in progress.

Of the following choices, the **highest** pressure at which HPI can be bypassed is ___(1)___ and once it is bypassed an automatic RBIC signal ___(2)___ cause an HPI actuation.

A. (1) 1650 psig
(2) will

B. (1) 1650 psig
(2) will not

C.✓ (1) 1750 psig
(2) will

D. (1) 1750 psig
(2) will not

Reasons:

A. The HPI bypass setpoint is < 1770 psig. 1650 psig is not the highest of the choices presented that will allow a bypass.

B. The HPI bypass setpoint is < 1770 psig. 1650 psig is not the highest of the choices presented that will allow a bypass. Both an RBIC and LPI signal will still cascade and cause an HPI actuation while HPI is bypassed.

C. Correct. 1750 psig is below the bypass setpoint of < 1770 psig. And, both an RBIC and LPI signal will still cascade and cause an HPI actuation while HPI is bypassed.

D. Both an RBIC and LPI signal will still cascade and cause an HPI actuation while HPI is bypassed.

OPS 4-13, Obj. 2; OPS 4-13 Section 1-2.0.C.11

RO - New

Reference(s) provided: None

10. Like the "B" makeup pump, the "C" Reactor Building fan can be selected to either actuation train. Once selected, it will function the same as the fan normally selected to that train.

11. A bypass switch is provided for each HPI channel to enable the operator to bypass the channel for normal shutdown, or for recovery from an actuation.

    a) The bypass can be initiated from the Main Control Board or from the ES 4160V switchgear room.

    b) When RC pressure is below 1770 psig the bypass bistable allows use of the manual bypass switch to bypass the output of the 1625 psig trip bistables.

    c) When two of three channels in each system of actuation are bypassed, the HPI actuation is prevented from being actuated by a 1625 psig reactor coolant system pressure signal.

    d) HPI can still be actuated by the 500 psig reactor coolant system pressure signal or the 4 psig Reactor Building pressure signal.

12. Isolation of systems not required for containment or RCS heat removal is also initiated by an HPI actuation. This actuation of RBIC valves by HPI is identified as HPI diverse containment isolation.

    a) The HPI diverse containment isolation function is bypassed when HPI is bypassed; however, the diverse isolation valves are not blocked from actuation on a 4 psig Reactor Building pressure signal.

13. Diverse containment isolation will occur as a result of a 1625 psig <u>automatic</u> actuation of HPI.

    a) Actuation of HPI as a result of an actuation of LPI, RBIC, or a manual HPI actuation will not actuate diverse containment isolation via the HPI circuit. Since all diverse containment isolation components are also a part of the RBIC components, the diverse containment isolation components will be closed directly by the RBIC circuit.

Normal Alignment

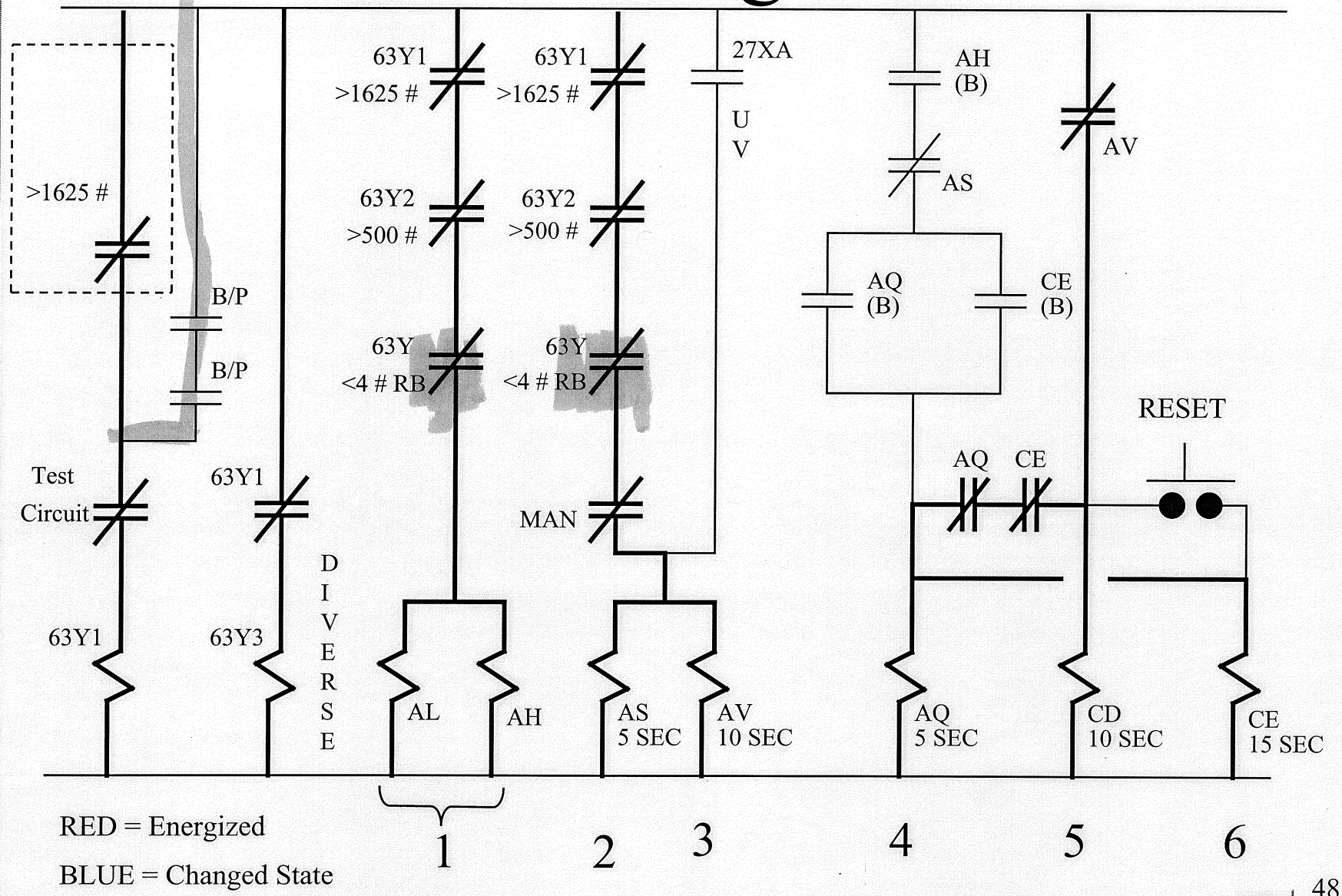

16. 014A4.02 001/2/2/RO#16/MEM 3.4/3.2/BANK/R/CR03701/ROT-4-028-079
Based on the following plant conditions:

- All ICS stations are in "AUTO" except for the Unit Load Master (ULD) which is in hand.
- Unit is at 79% with a power escalation in progress at 15 MWe per hour.
- "JOG" speed is selected on the Diamond Control Panel.

Which ONE of the following statements is correct regarding control rod speed during a Loss of Main Feedwater Pump runback?

A. Control rods insert at a rate of 3" per minute.

B.✔ Control rods insert at a rate of 30" per minute.

C. Control rod speed reduces reactor power at 50% per minute regardless of ROD speed selection.

D. Control rods insert at 30" per minute until power is < 52% and then revert to JOG speed.

Reasons:

A. The normal speed when JOG is selected is 3" per minute. However, whenever the diamond panel is in auto, rod speed is 30" per minute regardless of speed selector switch position.

B. Correct. With the diamond panel in auto, rod speed is 30" per minute regardless of the speed selector switch position.

C. While the loss of MFWP runback is designed to take place at 50% per minute, the reactor subsystem (i.e. the rods) cannot reduce power fast enough to accomplish this rate.

D. Control rods would insert at 30" per minute until power is less than 52%, but the diamond would then remain in auto so the speed would remain 30" per minute.

OPS 4-28, Obj. 4 & 7; OPS 4-28 Section 1-4.0.M.1.c)4); OPS 4-14 Section 1-4.0.F.4.e)4)

RO - Bank

Reference(s) provided: None

2) During transfer operations, JOG speed is selected to synchronize the group power supply with the auxiliary power supply.

- Jog speed must be selected in order to satisfy the transfer logic circuitry.

3) When the diamond control panel is in manual, RUN speed or JOG speed may be selected.

- RUN speed is 30 inches per minute.
- JOG speed is 3 inches per minute.

4) When the diamond panel is in automatic, rod speed is 30 inches per minute regardless of the position of the speed selector switch.

d) Group Position Selector Switch

1) The group position selector switch is used to select the group average (absolute) position indications that are displayed on the Main Control Board.

- The safety groups (1-4) or the regulating and APSR groups (5-8) can be selected for display.

e) In-Limit Bypass (Latch) Pushbutton/Indicator

1) When depressed, the in limit bypass will bypass the in limits for group 1-7, allowing further in motion of a group at its in limit.

2) The pushbutton is used during rod latching operations to ensure positive (land on groove) engagement between the roller nuts and the leadscrews.

- The pushbutton is depressed while the rods are driven in the in direction for fifteen seconds at jog speed.

e) The following are the currently active ICS runbacks:

ICS RUNBACKS			
Cause	**Limit**	**Rate**	**ULD**
4 RCPs	100.5%	50%/min	≈90%
3 RCPs	75%	50%/min	≈68%
2 RCPs	43%	50%/min	?
Loss of One MFWP or MFWBP	52%	50%/min	≈47%
Asymmetric Rod	60%	30%/min	≈54%

1) The four RCP runback does not normally occur because the plant should not be operating at this high of power level.

2) The two RCP runback to 43% should not occur due to a valid signal input since an RPS trip based on RCPs will not allow operation with less than three RCPs. However, if signal malfunctions within the ICS indicate that a two RCP pump combination exists, the ICS will respond to that input.

3) The asymmetric rod limit is based upon ULD demand. To ensure compliance with Technical Specifications, actual reactor power must be verified below the applicable limit and ULD demand further reduced if required.

4) The current runback rates exceed the rate at which the reactor control subsystem can reduce reactor power. This can result in upsets within the ICS (cross limits, etc).

f) Should more than one runback condition exist at the same time the one with the fastest rate of change will take precedence. When the load limit is reached for this runback condition, the runback with the next highest rate of change will take place, etc.

17. 015/017AA2.10 001/1/1/RO#17/C/A 3.7/3.7/BANK/R/CR03701/4-060-011
The following plant conditions exist:

- MUV-16, Seal Injection flow control valve, failed closed while in automatic.
- MUV-16 manual control has been selected and seal injection flow is being restored.
- Seal injection flows to each Reactor Coolant Pump (RCP) are as depicted below:

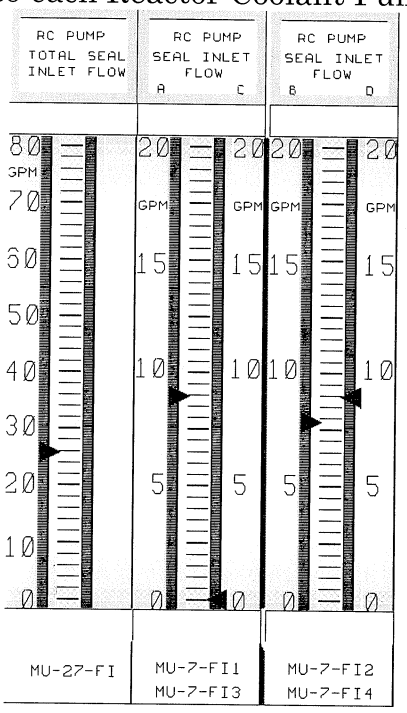

What action(s) should be taken with respect to the RCPs if *SW flow* to the RCPs is lost? (Assume no further actions taken for seal flow.)

A. RCP-1C must be tripped within five minutes. All other RCPs can continue to operate.

B.✔ RCP-1C must be tripped within two minutes. All other RCPs must be tripped within five minutes.

C. RCP-1C must be tripped immediately. All other RCPs must be tripped within five minutes.

D. All RCPs must be tripped immediately.

Reasons:

A. & C. RCP-1C must be tripped within two minutes due to loss of both SI and SW to the seals.

B. Correct. SW and seal injection have been lost to RCP-1C and it must be secured within 2 minutes. All RCPs have lost SW, so RCP-1A, B, and D must be secured within 5 minutes.

D. RCP-1A, 1B & 1D may operate a maximum of five minutes with a loss of SW to the motors.

OPS 4-60, Obj. 9; OP-302 Step 3.2.4 & 3.2.5

RO - Bank

Reference(s) provided: None

3.2 Limits and Precautions

	LIMIT	BASIS
3.2.1	Maintain Seal Injection Flow of 8-10 gpm/pump to all RCPs during normal operations when RCS is > 150 psig and > 150 °F	Ensures proper cooling and flushing flows to seals to prevent seal damage
3.2.2	RCPs may be operated without Seal Injection Flow provided SW Cooling is in operation	Cooling is maintained by internally circulating RCS
3.2.3	Idle RCPs are required to have their Controlled Bleed-Off valves closed if seal injection has been lost	Restricts the heatup rate of the seal cartridge to minimize the possibility of seal damage
3.2.4	RCPs must be stopped within two minutes upon loss of both Seal Injection Flow and SW flow	Cooling water supplies to seals has been lost and seal damage may occur
3.2.5	Maximum allowable time to operate RCP Motor without SW flow is 5 minutes	To prevent motor damage
3.2.6	Maximum allowable time to operate RCPs with Controlled Bleed-off line secured is 5 minutes (30 minutes when in an EOP)provided that Seal Injection and/or SW cooling is maintained	Ensures proper seal staging RCP operation with CBO isolated should be limited to one time during life of seal
3.2.7	RCP may be started three successive times from ambient conditions or two successive times from operating conditions (Additional starts may be allowed if RCP has been running for 25 minutes or shutdown for 2.5 Hrs)	Prevent motor damage due to overheating windings

18. 016A2.02 001/2/2/RO#18/MEM 2.9/3.2/BANK/R/CR03701/4-009-008
Which ONE of the following describes how a loss of NNI-X DC affects automatic PZR pressure control?

A.✓ The PORV and spray valve will not auto open but can be opened manually.

B. The PORV and spray valve will continue to function properly.

C. The PORV is failed open and the spray valve is failed closed.

D. The PORV is failed closed and the spray valve is failed open.

Reasons:

A. Correct. A loss of NNI-X DC renders automatic operation of the PORV and spray valve inoperable but they can be manually operated.

B. A loss of NNI-X DC renders the automatic operation of the PORV and spray valve inoperable.

C. Both valves are closed but can manually be operated.

D. Both valves are closed but can be manually operated.

OPS 4-09, Obj. 3 & 7; OPS 5-81 Obj. 7; OPS 4-09 Section 1-7.0.C; AP-581 Enclosure 4

RO - Bank

Reference(s) provided: None

its manual controls are available to the operator regardless of what lineup is chosen.

e) The modifications performed have caused the control response to be independent of the power level the unit is operating at when the loss of power occurs.

1) Assuming no operator action, the basic ICS and plant response to all loss of NNI events is continued short-term operation with the degradations described below.

C. LOSS OF NNI X-DC

1. All pressurizer heater banks fail off; however, the operator does have manual control of the On/Off heater banks.

2. The makeup and reactor coolant pump seal injection control valves automatically transfer to manual, with backup power to the memory modules allowing them to retain the demand signal which was present before NNI power was lost. This feature also allows the operator to manually control the valves.

3. The letdown isolation valve may close due to a momentary actuation of its signal monitor; however, the operator can manually open the valve from the Main Control Board.

4. The PORV and pressurizer spray valve is interlocked to remain closed; however, the operator can override this feature if necessary and manually control the valves.

5. Operator actions which may be required to ensure the plant remains on line include:

a) Manually controlling RCS pressure.

b) Maintaining pressurizer level by manually controlling the makeup and letdown control valves. Since the letdown isolation valve may spuriously close, the operator may desire to override the interlock and reopen this valve.

c) The operator should be aware that the following interlocks will be disabled:

4.0 ENCLOSURE 4 INTERLOCKS AFFECTED BY LOSS OF NNI-X POWER

Interlock	(DC) De-energized	(AC) De-energized
4th RCP start, T_C TEMP start interlock	Will not prevent start	Start prevented
RCP start, seal injection flow start interlock	Will not prevent start	Will not prevent start*
MUV-49, high letdown TEMP interlock	Will not close valve	Will not close valve
MUV-112, MUT low-low level interlock	Will not transfer on MUT low-low level	Will not transfer on MUT low-low level
PZR heater modulating banks	Will not control in manual or Auto	Will not control in manual or Auto
PZR heater on-off banks	Will not control in Auto	No effect
PORV	Will not Auto open	No effect
RCV-14, PZR Spray Valve	Will work in manual	No effect
Boric Acid Tanks low level interlock	Will not turn off Htr	No effect
Boric Acid Tanks high-low TEMP interlock	Will not turn Htr on or off on low or high TEMP (Manual heater control available)	Htr fails on when selected to "AUTO" (Manual heater control available)

*Actual seal injection flow signal to interlock is degraded by the affects of AC de-energized. A higher seal injection flow will be required to produce a signal value high enough to satisfy the interlock.

19. 022AG2.1.30 001/1/1/RO#19/C/A 3.9/3.4/NEW/R/CR03701/
The following plant conditions exist:

- MUP-1A was running with MUP-1A and MUP-1C ES selected.
- MUP-1A experienced an overcurrent trip due to a motor fault.

It is now desired to start MUP-1B to restore MU flow, with both MUP-1B and MUP-1C ES selected. Where is the switch that will be used to ES select MUP-1B?

A.✓ A ES 4160V Switchgear Room

B. B ES 4160V Switchgear Room

C. MUP-1B Pump Area

D. MCB ESF Section

Reasons:

A. Correct. In this case, the ES select switch on MUP-1C breaker cubicle will be selected to MUP-1C. MUP-1B will need to be 'A' ES selected. The switch to accomplish this is located on the breaker cubicle for MUP-1A.

B. This is the location if MUP-1B were to be 'B' ES selected. Since MUP-1C will remain ES selected, MUP-1B must be 'A' ES selected.

C. The transfer switch for aligning power to MUP-1B from either the 'A' or 'B' ES 4160V bus is located here. However, this is not how the pump is ES selected.

D. The ESF section of the control board is the location for most of the MUP controls. However, the ES selection is performed in the field in either the 'A' or 'B' ES 4160V switchgear rooms.

OPS 4-52, Obj. 3; OPS 4-52 Section 1-4.0.S.7; OP-402 Step 4.4.6

RO - New

Reference(s) provided: None

4.4 System Restoration After MU Pump Trip (Continuous) [NOCS 040448]

ACTION	DETAILS

NOTE

Breakers for MUP Suction Cross-tie Valve (MUV-62/MUV-69) are locked in "OFF" except when required for valve operation.

4.4.6	IF MUP-1A or MUP-1B (powered from "A" ES Bus) are to be started, THEN PERFORM the following details [NOCS 040383, 062409]	1. ENSURE CLOSED the following: __ MUV-73 __ MUV-62 2. ENSURE OPEN the following: __ MUV-69 __ MUV-58 3. SELECT ES "A" Standby selector switch (4160 ES Bus A, MUP-1A breaker cubicle) to desired pump: __ "PUMP 3A" OR __ "PUMP 3B" 4. __ IF MUP-1B is ES "A" selected, THEN ENSURE ES-MCC-3AB is powered from 480V ES Bus 3A, REFER TO OP-703, Plant Distribution System, as required

_____ / _____
Initial/Date

pump. The circuit breaker is normally racked into the "A" 4160V bus. In the event that the MUP-1C becomes inoperable, the breaker for MUP-1B can be moved to the "B" 4160V bus and installed in the cubicle (Figure 4).

1) This feature allows one makeup pump to be inoperable and still meet the Technical Specification requirement for two operable makeup pumps powered from separate power supplies.

e) The junction device for the power supply for MUP-1B is located in the "B" makeup pump room. Its purpose is to provide the junction where the power supply for the pump may be selected (Figure 5).

f) Kirk key interlocks between the switches on the junction device and locks located on the circuit breakers on the "A" and "B" 4160V ES buses ensure that the power supply circuit breakers are racked out and removed from their cubical before the power supplies may be changed at the junction device. This is necessary because the junction device is not designed to be a load-interrupting device. The interlocks also prevent both switches on the junction device from being closed at the same time, cross connecting the "A" and "B" 4160V ES buses.

7. Makeup Pump Control Logic (Figure 6)

a) The makeup pumps are normally operated from the Main Control Room using four-position (STOP, NORMAL-AFTER-STOP, START, and NORMAL-AFTER-START) control switches located on the ES section of the Main Control Board. Control switches for MUP-1A and -1B are on the ES A portion of the panel. The control switch for MUP-1C and a second control switch for MUP-1B are located on the ES B portion of the panel.

b) The pumps can be may be manually started, and two of the three pumps will automatically start on an HPI actuation. The pumps that auto start are determined by the positions of the start selector switches located on the circuit breakers for the "A" and "C" pumps.

1) The selector switch on the "A" pump breaker has two positions: PUMP 3A and PUMP 3B. The positions on the selector switch on the "C" pump breaker are PUMP 3C and PUMP 3B. In order for a pump to be started either manually or by an HPI actuation, it must be selected on its associated selector switch.

2) A white indicating light on the control switch for each pump, labeled SWGR TRANS PERMIT, will be on if the start selector switch is selected to that pump.

3) There is only one control handle for operating both the start selector switches. The handle cannot be removed from a switch if it is selected to the PUMP 3B position in either circuit breaker. This prevents the MUP-1B from being selected for start on both the "A" and "B" ES buses. If the selector switch is selected to a pump that does not have its circuit breaker in the cabinet and racked in, a MU PUMP OUT OF SERV alarm will annunciate in the Main Control Room.

c) Once a pump has been started, changing the position of the start selector switch will not affect normal operation of the pump other than preventing a pump that is not ES selected from being restarted should it trip or be stopped for any reason.

d) The start selector switches also prevent a selected pump from tripping on a 4160V ES bus undervoltage condition, and ensure that the non-selected pump does trip when an undervoltage condition occurs.

1) When a pump is selected, a contact in series with the contact that is closed by the undervoltage relay is opened. This prevents the trip signal from reaching the breaker-tripping device. Conversely, when a pump is <u>not</u> selected, the contact is closed and the pump breaker will be tripped if an undervoltage condition occurs.

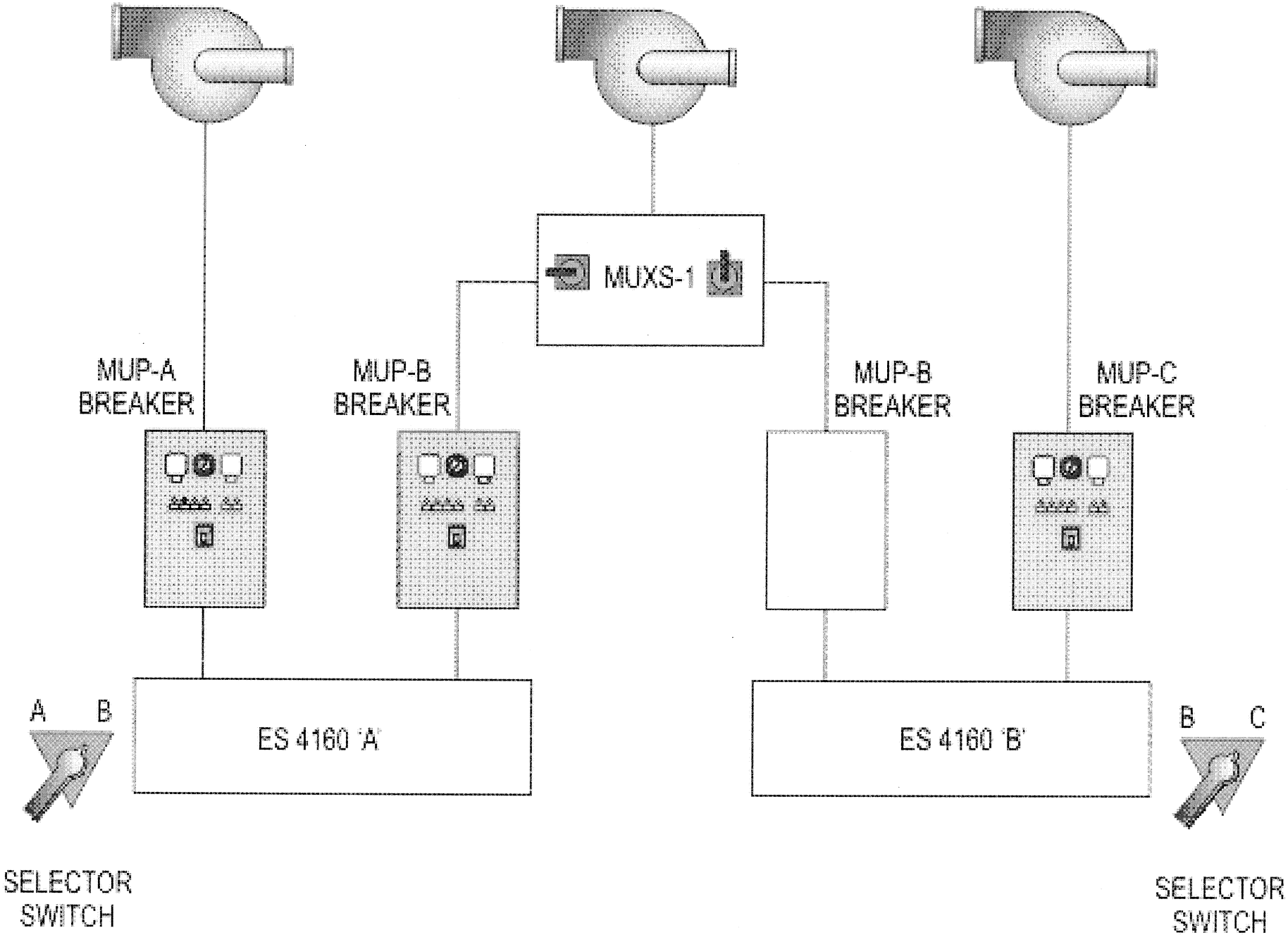

Figure 4 - Makeup Pump Power Supply Scheme

20. 022K1.04 001/2/1/RO#20/MEM 2.9/2.9/BANK/R/CR03701/4-063-008
Which ONE of the following describes the ***UNIQUE*** feature of "Mechanical" cooling mode in the Industrial Cooling System?

Passing the CI system water loop flow through the:

A.✔ RB Chiller (CIHE-4A/4B).

B. Heat Exchanger (CIHE-3).

C. Cooling Tower (CIHE-1A/1B).

D. Electric Water Heaters (CIHE-2A/2B).

Reasons:

A. Correct. The mechanical cooling mode is the only mode that has the RB chiller in operation.

B. CIHE-3 is used in the free mode only.

C. Both modes (free and mechanical) utilize the cooling tower.

D. Only water from the closed loop system can pass through the water heaters.

OPS 4-63, Obj. 3-2 & 3-3; OPS 4-63 Section 3-4.0.C.2

RO - Bank

Reference(s) provided: None

d) CI system temperature may be lowered to 55°F during outages.

2. The CI system flow is routed through the evaporator portion of the chiller (CIHE-4A) and cooling tower water is routed through the condenser portion of the chiller (CIHE-4B) in the "Mechanical" cooling mode.

a) The chiller is de-energized and isolated during the "Free" cooling mode of operation.

3. The chiller is equipped with two control systems. A MicroTech control system panel located in a panel mounted on the chiller skid, contains local START/STOP pushbuttons, chiller status indications and alarms, access to setpoints, and chiller remote trouble alarms. The Alerton control system panel located inside the Reactor Building chiller enclosure is used to control the cooling tower fans. The Alerton controller also has a remote trouble alarm output.

4. Chiller On/Off status indication is provided on the HVAC panel. Status Indication is also provided at the chiller compressor/motor starter.

a) Chiller trips:

1) Low oil pump ΔP (50 psid)
2) Low compressor suction pressure (29 psig)
3) High compressor discharge pressure (135 psig)
4) Low oil ΔT (40°F)
5) Low condenser flow (2.9 psid) or evaporator flow (1.41 psid)

5. Power to CIHE-4A/4B is provided from 4160V Reactor Auxiliary Bus 3.

a) The 4160V breaker control switch for the chiller is located on the HVAC panel.

b) Chiller OFF/ON status indicating lights are also provided on the HVAC panel.

6. Air conditioning unit CIHE-5 provides cooling to the chiller control panel

21. 024AG2.4.47 001/1/2/RO#21/C/A 3.4/3.7/BANK/R/CR03701/5-113-001
Which ONE of the following satisfies the requirements for emergency boration per AP-490 "Reactor Coolant System Boration"?

A. With the plant in Mode 1, flow is aligned from the "A" Boric Acid Storage Tank (BAST) through CAV-60 (emergency boration valve). Makeup Tank (MUT) level is constant with pressurizer level rising 5 inches over 10 minutes.

B.✔ With the plant in Mode 2 and CAV-60 inoperable, flow is aligned from the "A" BAST through the batch controller. MUT level is rising at a rate of 4 inches over 10 minutes with a constant pressurizer level.

C. With the plant in Mode 2 and no BAST available, flow is aligned from the Borated Water Storage Tank (BWST) through the running Makeup pump. MUV-31 (pressurizer level control valve) is in manual and adjusted for maximum flow. MUV-51 (letdown flow control valve) is throttled to maintain letdown temperature at 135°F.

D. With the plant in Mode 5 and CAV-60 inoperable, flow is aligned from the "A" BAST to a running Decay Heat pump through the batch controller with the PORV closed. RCS pressure maintained at 95 psig.

Reasons:

A. AP-490 requires a flow rate of at least 10 gpm. The pressurizer has 12.2 gallons/inch, thus the rate is only 6.1 gpm.

B. Correct. The alignment is per enclosure 1 of AP-490 and the flow rate is 12.3 gpm.

C. Step 3.17 of AP-490 requires that letdown temperature be maintained less than 120° F.

D. RCS pressure must be maintained less 50 psig per step 3.27 of AP-490.

OPS 5-113, Obj. 7; AP-490 Steps 3.10 thru 3.14

RO - Bank

Reference(s) provided: AP-490

3.0 FOLLOW-UP ACTIONS (CONT'D)

	ACTIONS	DETAILS
3.8 ___	IF in Mode 5, OR 6, THEN **GO TO** Step 3.26 in this procedure.	
3.9 ___	IF no BAST is available, THEN **GO TO** Step 3.15 in this procedure.	
3.10 ___	Initiate RCS boration from BAST.	1 ___ Open CAV-60 2 ___ IF CAV-60 is NOT available, THEN **PERFORM** Enclosure 1, Operation of the Batch Controller, in this procedure.
3.11 ___	Ensure all available CAPs are running.	___ CAP-1A ___ CAP-1B
3.12 ___	Ensure post-filter bypass valve is open.	• ___ Open MUV-100

3.0 FOLLOW-UP ACTIONS (CONT'D)

ACTIONS	DETAILS
3.13 ___ Determine boration flow rate.	• Determine flow rate using <u>any</u> of the following: ___ MUT level (30.8 gal/in) ___ Computer point X359 for MUT level (30.8 gal/in) ___ Computer point X201 for A BAST level See OP-103F, Tank Volumes, Figure 7 ___ Computer point X204 for B BAST level See OP-103F, Tank Volumes, Figure 7 ___ Batch controller

---

3.14 ___ <u>IF</u> boration flow rate is > 10 gpm, <u>THEN</u> **GO TO** Step 3.17 in this procedure.

3.0 FOLLOW-UP ACTIONS (CONT'D)

ACTIONS	DETAILS

STATUS

Plant in Modes 1 through 4 and any of the following exist:

- **BAST not available**
- **BAST flow rate of > 10 gpm cannot be achieved**

3.15 ___ Initiate RCS boration from BWST.	1 ___ Ensure selected MUP suction is aligned to BWST. 2 ___ IF selected MUP is NOT running, THEN start selected MUP and required cooling pumps: ___ MUP-1A ___ MUP-1B ___ MUP-1C [Rule 5, EDG Control]
3.16 ___ Throttle MUV-31 to maintain maximum flow rate for existing plant conditions.	

3.0 FOLLOW-UP ACTIONS (CONT'D)

ACTIONS	DETAILS

STATUS

RCS boration in progress

3.17 ___ Control RCS and MU inventory to compensate for boron addition.	• Maintain the following: ___ Letdown temperature < 120°F ___ PZR level based on plant conditions ___ MUT level 55 to 100 in See OP-103B, Plant Operating Curves • ___ IF letdown is available, THEN align letdown to an RCBT (as required). • ___ IF letdown is NOT available, THEN control RCS inventory based on equipment availability.

4.0 ENCLOSURE 1 OPERATION OF THE BATCH CONTROLLER

	ACTIONS	DETAILS
1.1 ___	Adjust batch controller for feed.	1 ___ Depress "STOP" 2 ___ Depress "BATCH SET" 3 ___ Enter 1200 gallons and depress "ENTER" 4 ___ Depress upper "DISPLAY" to exit the Batch Set Mode 5 ___ Depress "TOTAL" and verify "TOT GAL" is displayed.
1.2 ___	Ensure MUV-108 demand is set to "0%" (closed).	1 ___ Depress "VALVE SET" 2 ___ Depress "VALVE CE" 3 Ensure the entered value for MUV-108 is "0%" (closed): ___ Depress "0" ___ Depress "ENTER" 4 ___ Depress "RUN"
1.3 ___	Select "FEED SELECTOR SW." to BAST and pull handle up.	

4.0 ENCLOSURE 1 OPERATION OF THE BATCH CONTROLLER (CONT'D)

		ACTIONS	DETAILS
1.4	___	Open CAV-57	
1.5	___	WHEN "FEED PERMIT" is lit, THEN open MUV-541	
1.6	___	Prepare batch controller for boration.	1 ___ Set MUV-108 to 100% in batch controller and depress "ENTER" 2 ___ Depress lower "DISPLAY" 3 ___ Depress "RATE" and verify "RATE GPM" is shown.
1.7	___	**EXIT** this enclosure.	

22. 025AK2.05 001/1/1/RO#22/C/A 2.6/2.6/BANK/R/CR03701/5-099-002
The plant is in Mode 5 with the following plant conditions:

- "A" Decay Heat Removal Pump (DHP-1A) is in service.
- Indicated pressurizer level is lowering.
- The Reactor Building (RB) sump level is rising.
- RM-A6 (RB ventilation duct) is rising.
- The "A" 480V ES bus has just lost power due to a bus fault.

Of the following sets of procedures which set will contain guidance for this situation?

A. AP-404, Loss of Decay Heat Removal, and AP-770, Emergency Diesel Generator Actuation.

B.✓ AP-404, Loss of Decay Heat Removal, and AP-520, Loss of RCS Coolant or Pressure.

C. AP-520, Loss of RCS Coolant or Pressure, and AP-770, Emergency Diesel Generator Actuation

D. AP-520, Loss of RCS Coolant or Pressure, and AP-250, Radiation Monitor Actuation.

Reasons:

A. AP-770 is not required since an EDG will not have actuated. AP-520 is required due to the RCS leak.

B. Correct. DCP-1A will not be running, the "A" DH train must be secured (AP-404). AP-520 is required due to the RCS leak.

C. AP-770 is not required since an EDG will not have actuated.

D. AP-250 is not entered for RM-A6.

OPS 5-99, Obj. 4; OP-700A Enclosure 10; AP-404 Entry Conditions; AP-520 Entry Conditions

RO - Bank

Reference(s) provided: None

TITLE	480V ES BUS 3A (MTSW-3F)	**A ES 480V**
LOCATION	124' CONTROL COMPLEX	
DRAWINGS	206-011, EC-206-033	

BKR. NO.	LOAD COMPONENT IDENTIFICATION		NOR. POS.	(√)
1B	BREAKER 3311	FEED FROM 4160V ES BUS 3A (MTSW-2D)	CLOSED	
1C	BREAKER 3391	ES 480V BUS 3A TO ES 480V BUS 3B TIE	RI	
1D	BREAKER 3361	FEED TO ES MCC 3AB (A FEED)	CLOSED	
2B	BREAKER 3351	FEED TO ES MCC 3A2	CLOSED	
2C	BREAKER 3331	FEED TO ES MCC 3A3	CLOSED	
2D	FUTURE			
3A	BREAKER 3321	ES 480V BUS 3A TO REACTOR AUX BUS 3A TIE	CLOSED	
3B	DCP-1A	DECAY HEAT CLOSED CYCLE COOLING PUMP A	RI	
3C	CHHE-1A	CONTROL COMPLEX CHILLER A	RI	
3D	BREAKER 3341	FEED TO ES MCC 3A1	CLOSED	

/
Initial/Date

LOSS OF DECAY HEAT REMOVAL

1.0 ENTRY CONDITIONS

IF the running DHR train is lost,

THEN use this procedure.

2.0 IMMEDIATE ACTIONS

NOTE

There are no immediate actions for this procedure.

LOSS OF RCS COOLANT OR PRESSURE

1.0 ENTRY CONDITIONS

IF any of the following occur:

- A significant rise in RCS leakage
- An uncontrolled RCS PRESS reduction

THEN use this procedure.

2.0 IMMEDIATE ACTIONS

NOTE
There are no immediate actions for this procedure.

23. 026AG2.4.46 001/1/1/RO#23/C/A 3.5/3.6/BANK/R/CR03701/4-056-002
The pressurizer sample cooler has a significant tube leak. As the control board operator which of the following indications could you use to confirm this?

A. Nuclear Services Closed Cycle Cooling differential flow alarm and Reactor Building Sump automatic pumping frequency.

B.✔ Radiation monitoring alarm (RM-L3) and Nuclear Services Closed Cycle Cooling Surge Tank (SWT-1) level trend.

C. Nuclear Services Closed Cycle Cooling differential flow alarm and Nuclear Services Closed Cycle Cooling Surge Tank (SWT-1) level trend.

D. Radiation monitoring alarm (RM-L3) and Reactor Building Sump automatic pumping frequency.

Reasons:

A. Leakage from the sample cooler would go into the SW system, not into a collection facility which would direct it to the Reactor Bldg. sump. Also, the sample coolers are not monitored for differential flow.

B. Correct. RCS leaking into the SW system from a sample cooler would cause RML-3 to rise and also result in a change in the SW surge tank level trend.

C. SWT-1 level trend would change but the sample coolers do not have differential flow monitoring.

D. RM-L3 would detect the rise in radiation in the SW system but leakage from the sample cooler would not be collected in the Reactor Bldg. sump.

OPS 4-56, Obj. 2; OPS-4-56 1-6.0

RO - Bank

Reference(s) provided: None

1-6.0 SYSTEM INTERRELATIONS

A. AH The SW system provides cooling water to the three Reactor Building Fan Cooling Coil Assemblies and Fan Motors under emergency conditions.

B. SF The SW System provides cooling water flow to the Spent Fuel Coolant Pump Air Handling Units.

C. CA The SW System provides cooling water to the Pressurizer Sample Cooler and the two Steam Generator Sample Coolers.

D. PASS The SW System provides cooling water to the Post Accident Sampling System.

E. CH The SW System provides cooling water to the Control Complex Chilled Water System during normal operations. The Chilled Water System provides cooling to SWHE-2.

F. CI The CI System provides cooling water to the RB Fan Assemblies Cooling Coils and Fan Motors during normal operations.

G. DC The SW System can be used to provide an alternate source of cooling water to the High Pressure Injection Pump MUP-1C.

H. DO The SW System can be used to provide flush water to the DO System (applicable to the Raw Water Pumps).

I. DR The SW System provides cooling water to the Control Rod Drive Mechanism Stator Water Jacket Assembly Coolers.

J. EF The SW System provides cooling water to the Motor-Driven Emergency Feedwater Pump (EFP-1) Lube Oil Cooler and Motor Cooler.

K. ES The ES System provides the SW System with a signal to automatically start the Emergency Duty SW Pumps. The ES signal also isolates various non-essential loads from the SW System. In addition, the ES signal causes the cooling water for the RB Fans Cooling Coils and Fan Motors to switch from CI to SW.

L. IA The Instrument Air System provides motive force for pneumatic valves and instruments in the SW System.

M.	MU	The SW System provides cooling water to the three Letdown Coolers, two Seal Return Coolers, and the Make-up Pump 1B Motor and Lube Oil Coolers. SW is the normal source of cooling water to MUP-1A and can be used as an alternate source for MUP-1C (normally cooled by the DC System).
N.	NG	The Nitrogen System provides nitrogen to the SW system for Surge Tank pressurization.
O.	RC	The SW System provides cooling water to the Reactor Coolant Pumps Seal Heat Exchanger/Cover Heat Exchanger, Motor Upper Bearing Cooler, Motor Lower Bearing Cooler, and Motor Air Cooler.
P.	RM	The Radiation Monitoring System (RM) provides a means to detect radioactive contamination within the SW System.
Q.	RW	The SW System transfers heat from the various loads to the Nuclear Services and Decay Heat Seawater System (RW) through the SW Heat Exchangers. The SW System also provides cooling water for the RW Normal and Emergency Duty Pump Motors.
R.	SC	The SC System serves as an alternate source of cooling water for the Control Complex Chillers (CH), which are normally cooled by the SW System. The SW System can also be used to cool components in the SC System (IA Compressor and Water Box Priming Pumps).
S.	SF	The SW System provides cooling water to the Spent Fuel Coolers.
T.	SS	The Secondary Sampling System provides the ability to locally sample the SW System water.
U.	WD	The SW System provides cooling water to the Waste Gas Compressors. The WD-Gaseous Waste System accepts nitrogen that is bled off or relieved from the SW Surge Tank.
V.	WT	The Cycle Makeup Water System (WT) provides demineralized makeup water to the SW surge tank.

24. 026K2.02 001/2/1/RO#24/MEM 2.7/2.9/NEW/R/CR03701/
Which ONE of the following is the power supply to BSV-4, RB Spray Header Inlet Isolation Valve?

A. DPDP-8A

B. DPDP-8B

C. ES MCC 3A1

D.✔ ES MCC 3B2

Reasons:

A. DPDP-8A does provide power to a number of MOVs, but not to BSV-4.

B. DPDP-8B does provide power to a number of MOVs, but not to BSV-4.

C. This is the power supply for BSV-3 (A Train).

D. Correct. BSV-4 is the B Train valve, and is powered from ES MCC 3B2.

OPS 4-62 Obj. 3; OPS 4-62 Section 1-4.0.C.2; OP-700B Enclosure 21

RO - New

Reference(s) provided: None

located on the ES A and ES B sections of the Main Control Board.

1) Each pump can also be started locally at its respective ES 4160 Bus breaker.

b) The building spray pumps will automatically start on an ES actuation signal (Reactor Building pressure > 30 psig) coincident with a Reactor Building spray permit. In order to have a Reactor Building spray permit; ONE of the following conditions must be met:

1) HPI block 6 actuation or

2) HPI bypassed after an actuation has occurred.

- Blue indicating lights on the ESF A and ESF B sections of the Main Control Board indicate when the permit for each pump is satisfied.

- The Reactor Building spray permit, once sealed in, can be reset using the HPI Seal-In reset pushbuttons located on the ESF-A and ESF-B sections of the Main Control Board.

C. RB SPRAY HEADER INLET VALVES (BSV-3 AND -4)

1. BSV-3 and –4, which are motor operated throttle valves located on the 95' elevation of the Auxiliary Building in the Triangle Room, are used to control building spray flow.

2. Power to BSV-3 and -4 is supplied from 480V ES MCC

3. Control and Interlocks

a) The control stations for BSV-3 and –4, which are located on the ES A and ES B sections of the Main Control Board, have three modes of control: REMOTE/AUTO, LOCAL/AUTO, and MANUAL (Figure 2).

b) In REMOTE/AUTO, the flow control circuit for each valve will compare actual flow with a fixed voltage signal

TITLE	ES MCC 3B2 (MTMC-6)	**ES 3B2**
LOCATION	95' AUX BLDG	
FEEDER	480V ES BUS 3B UNIT 3D	PANEL DRAWING 206-057

BKR. NO.	LOAD COMPONENT IDENTIFICATION		NOR. POS. (√)	
1AL	AHP-1C/AHP-1D	CC AIR COMPRESSORS (NOTE 1)	OFF	
1AR	RMP-A15	480V OUTLET	ON	
1B	AHF-15B	DCP-1B AIR HANDLING UNIT	ON	
1C	AHF-44B	SAMPLE ROOM EXHAUST FAN	ON	
1D	CAHE-3B	B BAST HEATER	ON	
2A	MUV-27	NORMAL MAKEUP ISOL	ON	
2B	BSV-16	B BUILDING SPRAY PUMP SUCT ISO	LO	
2C	BSV-4	B BUILDING SPRAY PUMP FLOW CONTROL	ON	
3AL	DPBC-1B	BATTERY CHARGER	ON	
3AR	DPBC-1D	BATTERY CHARGER	ON	
3BL	DPBC-1F	BATTERY CHARGER	ON	
3BR	HTDP-2B	HEAT TRACE DIST PANEL (VIA HTTR-2B)	ON	
3C	SPACE			
3D	AHF-17B	CONTROL COMPLEX NORMAL SUPPLY FAN	ON	
4AL	VBDP-4/VBDP-10	B VITAL BUS (VIA INVERTER VBIT-1B)	ON	
4AR	VBDP-6/VBDP-11	D VITAL BUS (VIA INVERTER VBIT-1D)	ON	
4B	AHF-24B	INTERMEDIATE BUILDING SUPPLY FAN	ON	
4C	AHF-18B	CONTROL COMPLEX EMERGENCY SUPPLY FAN	ON	
5AL	HTDP-4B	HEAT TRACE DIST PANEL (VIA HTTR-4B)	ON	
5AR	ACDP-52	CONTROL COMPLEX DIST PANEL	ON	
5BL	VBDP-14	REGULATED DIST PANEL	ON	

NOTE 1: AHP-1C & 1D are selected off and de-energized to prevent cross connecting a system not rated for breathing grade air to the IA/SA system.

25. 027AK3.04 001/1/1/RO#25/C/A 2.8/3.3/NEW/R/CR03701/
The following plant conditions exist:

- The plant tripped from 100% power due to a loss of RCP-1B.
- Following the trip, ADV MSV-26 failed open.
- Prior to isolating the ADV, pressurizer level lowered to 10".
- MSV-26 has been isolated and the overcooling terminated.
- Tincore is now 546° F and stable.
- RCS pressure is 1835 psig.
- Pressurizer level has just been stabilized at 100".
- Pressurizer temperature is currently reading 590° F.

Over the next several minutes RCS pressure will:

A. rise because spray flow has been lost with the trip of RCP-1B.

B. rise because pressurizer heaters are raising pressurizer temperature.

C. lower because all heaters remain de-energized until manually reset.

D.✓ lower because subcooled liquid insurged into the pressurizer.

Reasons:

A. With RCS pressure at 1835 psig, the only spray that would normally be present is the ~ 1.5 gpm bypass flow. While this would be affected by the loss of the RCP, it would be negligible.

B. Pressurizer heaters would be adding heat to the liquid. However the liquid is currently ~ 35° F subcooled. The short term effect of this would be heat transfer from the vapor to the liquid which would result in lowering pressure.

C. Pressurizer heaters automatically de-energized when level went below 40". Now that level has been restored, banks D and E would be energized. A, B, and C would have power available, but their controller would have reverted to manual with 0 demand.

D. Correct. Pressurizer water space temperature is 590° F, which is ~ 35° F subcooled. The short term effect of this would be heat transfer from the vapor to the liquid which would result in lowering pressure.

OPS 4-60, Obj. 3; OPS 4-60 Section 1-4.0.E; SEN-248

RO - New

Reference(s) provided: Steam Tables

Reactor Scram, Safety Injection Actuation, and Rapid Cooldown Caused by Multiple Equipment Failures

Limited Distribution

March 19, 2004

Executive Summary

On January 23, 2004, Calvert Cliffs Unit 2 automatically scrammed from 100 percent power on low steam generator level when one of two turbine-driven main feedwater pumps inadvertently tripped. Following the scram, the turbine bypass valves and atmospheric dump valves opened as designed but failed to reclose, causing an excessive reactor coolant system (RCS) cooldown and pressure transient. The cooldown reduced RCS pressure to the automatic safety injection actuation setpoint. This was followed by a steam generator isolation signal that closed the main steam and main feedwater isolation valves, isolating steam to the turbine bypass valves. Operators were able to close the atmospheric dump valves by transferring control to the auxiliary shutdown panel about nine minutes after the scram.

An additional equipment failure prevented operators from resetting one channel of the safety injection actuation signal (SIAS) from the control room. That signal was reset from the engineered safety features cabinet in the cable spreading room. Approximately one hour after the SIAS was reset, a second SIAS occurred when operators were unable to stabilize RCS pressure because of the large volume of subcooled water in the pressurizer.

During the post-scram investigation, the station identified some emergency operating procedure and operator knowledge weaknesses that complicated the post-scram recovery. Additionally, several simulator fidelity deficiencies were identified.

The significant aspects of this event are as follows:

- The event was an unusual plant transient that resulted in the actuation of safety systems and involved multiple equipment malfunctions that affected the severity of the transient.
- Unusual operator actions were needed to manage the event, such as transferring control of the atmospheric dump valves to the remote shutdown panel and resetting safety injection locally at the engineered safety features panel.

Description

On January 23, 2004, with Calvert Cliffs Unit 2 operating at 100 percent power, a main feedwater pump tripped. While the reactor operator monitored primary plant parameters and steam generator levels for manual scram criteria, the control room (balance-of-plant) operator, with concurrence of the control room supervisor, attempted to reset the feedwater pump following the guidance in the feedwater system malfunction abnormal operating procedure. Three attempts by operators to reset the pump turbine controls were not successful. The crew initiated a manual reactor scram when steam generator low water level pretrip alarms were received. Because of the extremely short time between

the pretrip alarm and automatic trip setpoint, an automatic reactor scram signal was received approximately one second before the manual reactor scram signal. The crew entered the emergency operating procedure (EOP) for standard post-trip actions.

Immediately following the reactor scram, the turbine bypass valves and atmospheric dump valves (ADVs) opened to the full-open position, initiated by the steam dump control circuitry. These valves have relief capacity for up to 45 percent of rated thermal power. As stored energy is removed from the RCS, the circuitry is designed to automatically control the turbine bypass valves and ADVs to maintain RCS temperature at approximately 532 degrees Fahrenheit.

The turbine bypass valves and ADVs did not close as expected, which resulted in a rapid overcooling and reduction in RCS and steam generator pressure. An auxiliary feedwater actuation signal occurred because of lowering water levels in the steam generators. An SIAS was received on low RCS pressure of approximately 1,740 psia. All safety systems started as designed, and RCS pressure remained above the high pressure safety injection pump shutoff head throughout this event and did not inject water into the RCS. As designed, the SIAS also isolated RCS letdown and deenergized pressurizer backup heaters. The main steam isolation valves shut when steam generator pressure decreased to the steam generator isolation signal setpoint, isolating steam flow through the turbine bypass valves.

Approximately nine minutes after the reactor scram, the control room crew had control of the ADVs transferred to the auxiliary shutdown panel to remove the quick-open signal and gain control of the valves. Once control was transferred, the ADVs were manually controlled, mitigating the cause of the overcooling event and pressure transient. RCS pressure was 1,523 psia, RCS temperature was 486 degrees Fahrenheit, and pressurizer level was below scale low on narrow range indication. Because of post-scram reactor decay heat, reactor coolant pump heat, and residual heat contained within RCS piping, the plant parameters began to restore to normal post-scram values. Approximately three minutes after the ADVs were closed, pressurizer level indication increased, as expected.

The crew transitioned to the reactor trip emergency operating procedure, EOP-1. With an SIAS still present, all charging pumps were running, and RCS letdown was isolated. The crew took manual control of pressurizer main spray to control rising RCS pressure. Pressure was stabilized at 2,318 psia. The crew removed two of three charging pumps from service because pressurizer level was still increasing (~264 inches, 73 percent). Five minutes later, the third charging pump was stopped to prevent further increases in pressurizer level (~275 inches, 75 percent). At 515 degrees Fahrenheit, the RCS heatup was stopped by the operating of ADVs to preclude additional pressurizer level rise due to thermal expansion in the RCS.

The crew attempted to reset the SIAS to allow restoration of plant systems. The crew's main priority was to energize the pressurizer backup heaters to raise RCS pressure to the normal range and restore operation of the RCS letdown control valves to lower pressurizer level to the normal range. SIAS channel A was reset from the control room. However, SIAS channel B would not reset from the control room. The crew was able to reset the B signal by dispatching an operator to the engineered safety features actuation system cabinet located in the cable spreading room 10 minutes after channel A was reset.

Pressurizer backup heaters, RCS letdown, and one charging pump were placed in service. Because a large volume of subcooled water had been added to the pressurizer, RCS pressure continued to slowly decrease, despite all pressurizer heaters being in service. With RCS pressure at 1,782 psia, the crew began allowing the RCS to heat up to return parameters to within the normal post-trip temperature band of 525-535 degrees Fahrenheit.

The crew monitored the lowering pressurizer pressure and recognized that pressure was approaching the SIAS setpoint. A conservative decision was made to not block the approaching SIAS signal because the crew did not fully understand the cause of the lowering pressure. Thirty-three minutes after the heatup started, a second SIAS was received at approximately 1,750 psia because of the slow decrease in RCS pressure. The safety significance of this unplanned SIAS was minor. All SIAS equipment was already running, and the only equipment status that changed as a result of SIAS actuation was letdown isolating and safety-related pressurizer heaters turning off. The higher safety significance was the heatup and corresponding pressurizer pressure excursion. Operator intervention to stop charging pumps was necessary to prevent possibly reaching the power-operated relief valve setpoint and potential RCS inventory loss.

At this point, RCS pressure stabilized at approximately 1,745 psia for the next 30 minutes. The crew blocked and reset SIAS to restore full pressurizer heater capacity. Plant parameters were restored to normal values approximately two hours later.

Equipment Failures That Initiated or Complicated the Transient

1. The feedwater pump turbine tripped on a spurious electronic overspeed signal because a fuse holder developed a high resistance connection caused by local corrosion that resulted in degraded voltage. The fuse holder was located in an area where the cabinet is subjected to abnormally high humidity because of a previous steam leak from a nearby test valve on the steam generator feed pump suction line and the close proximity of a floor drain that collects relief valve discharge from a low-pressure feedwater heater. Abnormal environmental conditions that could affect equipment reliability were not recognized during original design.

2. The feedwater pump turbine would not reset from the control room because the electric-to-hydraulic converter did not maintain control oil pressure within the required range. The oil pressure was above the latch permissive setpoint. This out-of-specification condition was caused by a calibration shift of the electric-to-hydraulic converter.

3. The atmospheric dump and turbine bypass valves failed to close upon reaching the reset setpoint because the control relay contacts failed to reposition after the relay was deenergized. The contacts were pitted and fused together. The relay contacts failed in this manner because the operating voltage of 125 volts DC was higher than the design-rated voltage of 29 volts DC. The contact rating was not considered or accepted by an engineering evaluation

when the plant was constructed because of inadequate system design communication between the architect engineer and the NSSS vendor. In addition, a modification was made in 1993 that added another relay in the circuit, thereby doubling the current through the contact.

4. The safety injection actuation signal could not be reset from the control room because a wire came loose from the train B containment hydrogen purge handswitch. The loose lead caused an open circuit in the SIAS B remote reset circuitry. Multiple maintenance evolutions have occurred in the vicinity of this handswitch, increasing the likelihood that inadvertent contact with the handswitch wiring led to the loss of circuit continuity.

Emergency Operating Procedure Weaknesses

A second safety injection actuation signal was received while the operators were stabilizing RCS temperature. The second unplanned signal was caused by the SIAS being reset with pressurizer conditions unable to support maintaining pressure above the SIAS setpoint.

At the termination of the excess steam demand event, the crew performed a reactor coolant system heatup per post-trip emergency operating procedure EOP-0. This procedure does not have guidance to hold temperature steady; therefore, the pressurizer was allowed to fill with subcooled water, with a corresponding saturation pressure of approximately 700 psia. The crew did not take a parallel action contained in the excess steam demand emergency operating procedure, EOP-4, to hold T-cold constant. Action to correct this includes revision of EOP-0 to ensure RCS T-cold is maintained approximately constant following termination of excessive RCS cooldown.

It is the station's standard practice that the crew go through EOP-0 twice to validate diagnosis of the event. The crew implemented the reactor trip emergency operating procedure, EOP-1, approximately 30 minutes after the scram. Station management considered 30 minutes to be an excessive amount of time before transition to an optimal recovery procedure. The mitigating actions taken in EOP-1 were similar to those actions in EOP-4. The timeline for securing charging pump injection and securing RCS heatup was essentially identical no matter which EOP was chosen. The station is implementing methods of using EOP-0 to ensure timely transition to an optimal recovery procedure.

The SIAS was reset to gain control of additional pressurizer heaters and letdown. The EOPs do not contain steps to verify plant conditions that would support the resetting of the SIAS. EOP engineering safety features actuation signal/auxiliary feedwater actuation signal reset steps are being revised to include checking parameters to ensure an unplanned actuation does not recur.

Simulator Fidelity Deficiency

During the post-scram investigation, the station performed a validation run of the event on the simulator and discovered a mismatch with some plant parameters. Simulator RCS pressure and pressurizer temperature responded differently from the conditions experienced during the plant transient upon refilling of the pressurizer following the initial transient. The station determined that the fidelity issue was caused by deficiencies in the original simulator software model installed in 1985. Specifically, discrepancies between the simulator response and the plant led to the

identification of three simulator model deficiencies, as follows:

- overprediction of steam condensation on the pressurizer wall
- underprediction of pressure at the time of isolation of the atmospheric dump valve
- overprediction of the temperature of the pressurizer liquid

The station concluded that the simulator fidelity deficiencies did not contribute to the severity of the transient or to the second SIAS actuation.

References

1. Nuclear Network® Operating Experience messages OE17663 of January 27, 2004, OE17827 of February 20, 2004, and OE17928 of March 9, 2004.

Plant Information

Unit:	Calvert Cliffs Unit 2
Year Commercial:	1977
Reactor Type (Size):	PWR (918 MWe)
Reactor Manufacturer:	Combustion Engineering
Turbine Manufacturer:	Westinghouse
Plant Designer:	Bechtel
Event Date:	January 23, 2004

Event Criteria

Unusual plant transient	Multiple equipment failures affecting severity Unusual operator actions to manage the event

Cause Categories

Design	Fuse located in a high humidity environment
Design	Relay operated at a higher voltage than design
Maintenance	Wire inadvertently bumped loose
Aging/ Degradation	E/H converter out of calibration

This document is based on technical information provided by the Constellation Energy Group (Calvert Cliffs Nuclear Power Plant).

Utilities and participants are requested to provide feedback on similar occurrences and solutions at their plants or on their equipment to the information contact listed below.

Keywords
FEEDWATER PUMP, HIGH-PRESSURE SAFETY INJECTION, OVERCOOLING, POWER-OPERATED RELIEF VALVE, REACTOR SCRAM, SAFETY INJECTION, SCRAM, STEAM DUMP VALVE, TURBINE BYPASS VALVE, SIMULATOR

LIMITED DISTRIBUTION: Copyright © 2004 by the Institute of Nuclear Power Operations. Not for sale nor for commercial use. Unauthorized reproduction is a violation of applicable law. Each INPO member and participant may reproduce this document for its business use. This document should not be otherwise transferred or delivered to any third party, and its contents should not be made public, without the prior agreement of INPO. All other rights reserved.

NOTICE: This information was prepared in connection with work sponsored by the Institute of Nuclear Power Operations (INPO). Neither INPO, INPO members, INPO participants, nor any person acting on the behalf of them (a) makes any warranty or representation, expressed or implied, with respect to the accuracy, completeness, or usefulness of the information contained in this document, or that

the use of any information, apparatus, method, or process disclosed in this document may not infringe on privately owned rights, or (b) assumes any liabilities with respect to the use of, or for damages resulting from the use of any information, apparatus, method, or process disclosed in this document.

Telecopy No.: (770) 644-8121
Information Contact: Jim Mah,
(770) 644-8749, mahjs@inponn.org

B. REACTOR VESSEL

1. Refer to lesson plan OPS-4-34 for detailed information on the reactor vessel and internals.

C. ONCE THROUGH STEAM GENERATORS

1. Refer to lesson plan OPS-4-32 for detailed information on the once through steam generators.

D. NOZZLE DAMS

1. Refer to lesson plan OPS-4-32 for detailed information on the nozzle dams.

E. PRESSURIZER

1. The pressurizer serves the following functions:

a) Establishes and maintains RCS pressure

b) Provides a surge volume for limiting pressure excursions

c) Provides a water reserve to accommodate reactor coolant temperature/density changes during operation.

1) Pressurizer level will change approximately 5 inches for every 1°F change in RCS average temperature.

2. The pressurizer is a carbon steel, stainless steel clad vertical cylindrical vessel with a volume of 1500 cubic feet. Major pressurizer vessel penetrations include:

a) A 4-inch spray line

1) The spray line connects to the cold leg piping at the discharge of the "B" reactor coolant pump.

2) The line connects to a 2.5-inch cast stainless steel water spray nozzle in the upper section of the pressurizer. The nozzle is adjusted to deliver a vertical spray pattern.

3) A small bypass line containing a throttled bypass valve is provided around the motor operated pressurizer spray valve.

- The bypass line is used to maintain the pressurizer boron concentration in equilibrium with the RCS, and to minimize cooling of the water in the spray and surge lines by ensuring a small constant flow of water through the pressurizer.

- The continuous flow is set to ~1.5 gpm.

b) Three 2.5-inch pressure relief valve lines

c) A 1-inch vent line (also used to provide steam space samples)

d) A 16-inch manway

e) A 1-inch sample line (water space)

f) A 10-inch surge line

1) The surge line connects the bottom of the pressurizer to the "A" hot leg.

g) A 3/8-inch temperature well

h) Six 1-inch level sensing lines

i) Three 19 1/8-inch heater bundles

1) The heaters are removable.

3. The pressurizer is protected from thermal effects by thermal sleeves in the surge and spray lines and by an internal diffuser above the surge line entrance to the pressurizer.

4. Surge line temperature, spray line temperature, and temperatures in the tailpipes for the code safety valves and the PORV are monitored and sent to the plant computer.

1) The measurement range for each of these parameters is 0 - 700°F.

5. At a normal operating water level of 220 inches, the water volume in the pressurizer is ~930 cubic feet and the steam volume is ~570 cubic feet.

F. PRESSURIZER HEATERS

1. The pressurizer immersion heaters are arranged in three heater bundles located in the lower portion of the pressurizer.

   a) Each bundle contains 39 heater elements (for a total of 117 elements).

   b) Thirteen electric circuits serve each bundle (3 heater elements per circuit).

   c) This arrangement allows selected heaters to be used to obtain the desired water temperature/pressure without having to energize an entire bundle.

2. The total electric heater capacity is 1638 kW. Each heater element supplies 14 kW, and each bundle supplies 546 kW.

3. Power to the pressurizer heaters is supplied from the 480V Pressurizer Heater MCC 3A and 3B, which are fed from 480V Reactor Auxiliary Bus 3A and 3B, respectively.

4. Heater Arrangement and Control

   a) The heaters are arranged in five control banks as shown in the following table:

Bank	Group	# Elements	Rating (kW)	Pressure Setpoint	
				Full On	Off
A	1	9	126	2147	2155
B	2	9	126	2147	2155
C	3 - 6	36	504	2135	2155
D	7 - 9	27	378	2120	2140
E	10 - 13	36	504	2105	2125

26. 029EK1.03 001/1/1/RO#26/C/A 3.6/3.8/NEW/R/CR03701/
The following plant conditions exist:

- The plant was operating near beginning of life.
- A seismic event has occurred.
- The plant was tripped per AP-961 "Earthquake".
- While CRD groups 1-7 fully inserted, a large number of individual rods remain stuck out.
- Power range NIs indicate 4% and stable.

The required EOP-2 Immediate Action for these conditions is ___(1)___ and the reactivity effect of taking this action would be ___(2)___ negative at BOL than at EOL.

A. (1) De-energize the CRD System
(2) more

B. (1) De-energize the CRD System
(2) less

C. (1) Start emergency boration
(2) more

D.✓ (1) Start emergency boration
(2) less

Reasons:

A. This action would be required if one or more groups had failed to insert. Since only individual rods failed to insert power has already been removed from all rod groups. De-energizing the CRD system would have no added benefit.

B. This action would be required if one or more groups had failed to insert. Since only individual rods failed to insert power has already been removed from all rod groups. De-energizing the CRD system would have no added benefit.

C. DBW becomes more negative over core life.

D. Correct. The reactor is not shutdown, as indicated by power stable at 4%. All groups have already de-energized so the correct immediate action would be to initiate emergency boration. At beginning of life, DBW is less negative.

OPS 5-96, Obj. 2; OPS 1-48, Obj. 24; OPS 1-48 Table 2; EOP-2 Step 2.3; EOP-TBD cross-step document for EOP-2 Step 2.2 and 2.3

RO - New

Reference(s) provided: None

2.0 IMMEDIATE ACTIONS

ACTIONS	DETAILS

CAUTION

If Steps 2.1 through 2.3 are not performed prior to subsequent actions, adequate heat removal capability may not exist.

2.1 ___ Depress Rx trip push button.

2.2 ___ Verify CRD groups 1 through 7 are fully inserted.

___ IF any CRD group has NOT fully inserted, THEN de-energize CRD system.

1 ___ Open 480V Bkr 3305

2 ___ Open 480V Bkr 3312

3 ___ Close 480V Bkr 3305

4 ___ Close 480V Bkr 3312

2.0 IMMEDIATE ACTIONS (CONT'D)

ACTIONS	DETAILS
2.3 ___ Verify NIs indicate Rx is shutdown.	
___ IF Rx is NOT shutdown, THEN start emergency boration and ensure adequate primary to secondary heat transfer is maintained.	1 ___ Depress "HPI MAN ACT" push buttons on Trains A and B. 2 ___ Ensure EFIC has actuated. 3 ___ Attempt to match MFW to Rx power. 4 ___ IF MFW is NOT available, THEN trip Main Turbine. 5 ___ Open CAV-60 6 ___ Start CAP-1A and CAP-1B 7 ___ WHEN Rx is shutdown, THEN continue in this procedure.
2.4 ___ Depress Main Turbine trip push button.	
2.5 ___ Verify TVs and GVs are closed.	
___ IF any TV, AND any GV are NOT closed, THEN close all MSIVs.	___ MSV-412 ___ MSV-413 ___ MSV-414 ___ MSV-411

EOP Step: 2.2
TBD Step: 1.2 **Section:** III.A **Deviation Type:** None
Generic Deviation: None
Justification:
None
Step Basis:
The intent of this step is to assure the reactor is in a shutdown condition, and is not intended to address achievement or verification of adequate SDM. After completion of the immediate actions, SDM verification is performed based on individual CRD position.

This step verifies that CRD groups 1-7 are fully inserted and provides contingency actions to de-energize CRDs if they are not. This is a verification of the RPS automatic action, which should have occurred with a manual or automatic reactor trip. The criteria given in the step will identify a failure of any or all CRD breakers. Due to the power supply arrangement to the CRDs, a single rod, or random multiple rods, failing to insert is not indicative of failure of the CRD trip breakers to open and requires no action in this step.

Should Rx trip devices fail to operate, this action is taken to provide an alternate means of CRD power removal. While a single rod group being withdrawn may not prevent Rx shutdown, the selection of the indications to take this action was made to simplify the decision. The actual rod pattern that would prevent Rx shutdown upon failure of the trip devices will vary over core life. In addition, this action provides the necessary actions to affect a Rx shutdown during CRD breaker failure scenarios that have been experienced in the industry. Prior to re-energizing the buses, a short time delay (about 3 seconds) should be included. This time delay allows voltage to decay, and motors to stop. The details are numbered to build an inherent time delay in energizing the busses. If these actions are not successful in de-energizing the buses, additional breakers should be opened until CRDs are successfully de-energized.
Setpoint Code: None **Setpoint Value:** None
References: NED98-0014

EOP Step: 2.3

TBD Step:	1.3	**Section:** III.A	**Deviation Type:** None
	1.4	III.A	None
	1.5	III.A	None
	1.6	III.A	None

Generic Deviation: None
Justification:
None

b) This is not as pronounced because the fission product poisons are located in the fuel rods where the thermal neutron flux is low. Consequently, their effect on the thermal diffusion length is not as pronounced as the effect of having boron atoms dissolved in the moderator.

4. CORE LIFE (EFPD)

a) As the amount of fuel decreases and the amount of fission product poisons increase, the thermal neutron flux must increase and the concentration of boron in the moderator must be decreased in order to maintain the reactor critical with the same control rod configuration.

b) The dominant factors are the increased thermal neutron flux and the reduction in boron concentration over core life. This causes a net increase in the differential boron worth.

Variable	DBW	Reason
T_{mod} ↑	↓	Increased T_{mod} reduces the number of boron atoms in core region
ppmB ↑	↓	Decreased in φ_{th} available to each boron atom (competition)
EFPD ↑	↑	Increased φ_{th} and decreased ppmB over core life
Fission Products	↓	Decreased φ_{th} available to each boron atom (competition)

Table 2: Factors Affecting Differential Boron Worth

27. 033K3.03 001/2/2/RO#27/C/A 3.0/3.3/NEW/R/CR03701/
The following plant conditions exist:

- Plant is in Mode 6
- 480V ES Bus 3B is tagged out for planned maintenance
- A ground fault causes a loss of 480V ES Bus 3A

Which ONE of the following represents the effect of this failure and the reason for that effect?

A. RCS temperature will lower due to the DHHE temperature control failing to maximum cooling.

B. RCS temperature will rise due to the trip of DHP-1A.

C. Spent Fuel Pool temperature will lower due to the SFHE temperature control failing to maximum cooling.

D.✓ Spent Fuel Pool temperature will rise due to the loss of SFP-1A.

Reasons:

A. While the normal failure mechanism for DHHE temperature control is max cooling, this failure would not be expected to affect this component. Additionally, since DCP-1A has been lost, RCS temperature would be rising.

B. RCS temperature will rise, but it will be due to the loss of DCP-1A, not DHP-1A (which is powered from 4160V ES Bus 3A).

C. The spent fuel cooling system has no automatic temperature control.

D. Correct. SFP-1A is powered from ES MCC 3A1, which is powered from 480V ES Bus 3A. Once SFP circulation is lost, temperature will rise.

OPS 4-29, Obj. 6; OPS 4-29 Section 1-2.0.F & 1-4.0.B.6

RO - New

Reference(s) provided: None

E. The spent fuel pools are designed to withstand tornado generated missiles, and are covered with missile shields except during activities associated with handling fuel in the pools.

1. If a tornado watch is received during a fuel handling operation, installation of the shields will begin immediately.

F. There are no automatic control features, motor operated, or air operated valves associated with the system. With the exception of starting/stopping the spent fuel cooling pumps and borated water recirculation pump, all system operations are performed locally.

G. The system is designed to maintain spent fuel storage pool temperatures at ≤160°F during refueling storage conditions.

1. Refueling storage conditions assume the following:

a) A heat load of 29.65×10^6 BTU/hr generated by a full core offload (156 hours after reactor shutdown) plus all previously unloaded fuel assemblies.

b) Both heat exchangers in service with an SW flow to each heat exchanger of 1250 gpm at 100°F.

c) Spent fuel coolant flow to each heat exchanger is 1300 gpm.

d) Ultimate heat sink temperature (RW system) is 95°F.

H. Under normal storage conditions with one spent fuel cooling pump and one spent fuel coolant heat exchanger in service, the spent fuel cooling system will maintain spent fuel storage pool temperatures at ≤151°F.

1. Normal storage condition assumes the following:

a) A heat load of 8.74×10^6 BTU/hr generated by 72 newly off loaded fuel assemblies (30 days after reactor shutdown) plus all previously unloaded fuel assemblies.

b) SW flow to the in service heat exchanger is 900gpm at 110°F.

Comment: Page: 10
Excessive SW flowrate to any spent fuel heat exchanger WILL cause tube damage.

c) Spent fuel coolant flow to the in service heat exchanger is 1300 gpm.

d) Ultimate heat sink temperature (RW system) is 95°F.

5. SFP-1A and –1B are normally operated using four position (STOP, NORMAL-AFTER-STOP, START, NORMAL-AFTER-START) spring-return to normal control switches located on the PSA section of the Main Control Board.

   a) The pumps can also be operated from local control stations.

6. The 50 HP motors for SFP-1A and –1B are supplied from 480V ES MCC 3A1 and 480V ES MCC 3B1, respectively.

C. SPENT FUEL COOLANT PUMP AIR HANDLING UNITS (AHHE-29A/B AND AHF-8A/B)

1. AHHE-29A/B AND AHF-8A/B, located on the 119' elevation of the Auxiliary Building at the entrance to the spent fuel cooling pump area, provide cooling for the spent fuel cooling pump motors.

2. Each unit consists of a fan and cooling coils supplied from the nuclear services closed cycle cooling system.

   a) Each fan blows air across its cooling coils directly onto the pump motors.

   b) One unit is sufficient to supply the cooling needs of both motors.

3. AHF-8A and –8B are powered from 480V ES MCC 3A1 and 480V ES MCC 3B1, respectively.

4. The air handling fans are operated from the Main Control Room primarily or from local control stations.

Comment: Page: 16
The SW flowrate to these components is critical to the SW system flow balance (performed under PT-136A). This flowrate should not be altered without first checking with the SW system engineer for possible consequences.

D. BORATED WATER RECIRCULATION PUMP (SFP-2)

1. SFP-2 is a centrifugal, vertical shaft pump located on the 119' elevation of the Auxiliary Building. Design flow rate through SFP-2 is 180 gpm

   a) The minimum allowable flow rate through SFP-2 is15 gpm.

   b) The maximum allowable pump inlet temperature is 120°F (NPSH considerations).

2. The 15HP motor for SFP-2 is powered from 480V Reactor MCC 3A1.

3. SFP-2 is normally operated using a five position (STOP, NORMAL-AFTER-STOP, START, NORMAL-AFTER-START, PULL-TO-LOCK) spring-return to normal control switch located on the PSA section of the Main Control Board. The pull-to-lock position is engraved on the escutcheon plate but the switch can NOT be physically taken to the pull-to-lock position.

28. 034G2.4.31 001/2/2/RO#28/C/A 3.3/3.4/NEW/R/CR03701/

With the Spent Fuel Handling Bridge (FHCR-3) aligned per the picture below, the Fuel Grapple Overload light will come on at ___(1)___ pounds and the Fuel Grapple Underload light will come on at ___(2)___ pounds.

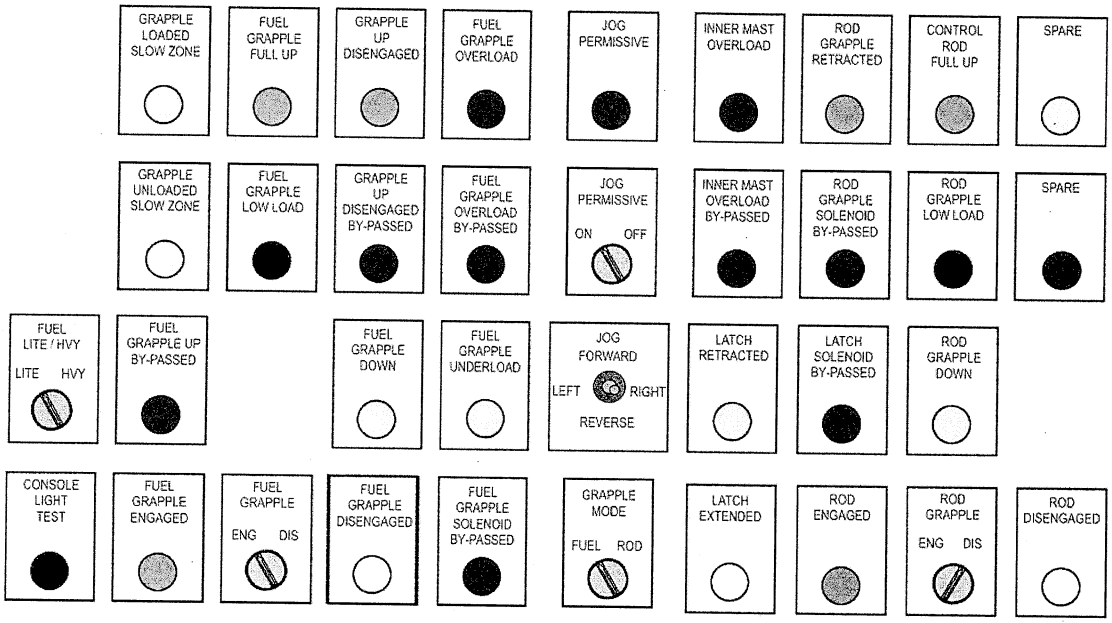

A.✓ (1) 2700
(2) 1600

B. (1) 2700
(2) 1700

C. (1) 2800
(2) 1600

D. (1) 2800
(2) 1700

FUEL HANDLING EQUIP
Knowledge of alarms and indications, and use of response instructions.

Reasons:

A. Correct. The grapple is engaged and the mode is selected to "LITE" (i.e. fuel bundle without a rod). The overload and underload setpoints in this case are 2700 lbs and 1600 lbs respectively.

B. The underload setpoint would be 1700 lbs only if "HVY" (fuel bundle with a rod) were selected.

C. The overload setpoint would be 2800 lbs only if "HVY" (fuel bundle with a rod) were selected.

D. These would be the appropriate choice if "HVY" were selected.

OPS 4-26, Obj. 3; OPS 4-26 Section 1-4.0.A.22; FP-601C Enclosure 3

RO - New

Reference(s) provided: None

VERIFYING OR CHANGING ELEVATION OR LOAD SETPOINTS

Description	Ref.	Memory	Direction Set	ROD ZZ-Tape Ft-inches	GEMCO desired	GEMCO As found	GEMCO As left
Rod Slow Zone Limit	GL-8	V224	UP	39' 1 7/8"	3050		
Rod Retracted A Rack	GL-9	V225	UP	33' 6"	2480		
Rod Retracted B Rack	GL-15	V226	UP	33' 6"	2480		
Rod Grapple Down A Rack limit	GL-5	V227	DN	22 - 9 5/8	1270		
Rod Grapple Down B Rack limit	GL-14	V228	DN	22 - 3 7/8	1200		

NOTE: GEMCO desired values are based on GEMCO value of 3000 when Tube ZZ-tape indicates elevation of 38' 9".

ZZ-Tape Desired elevations are based on a TUBE ZZ-Tape full up reading of 38' 9" or ROD full up reading of 38' 9". Change-out of a ZZ-tape during fuel handling may require application of an adjustment factor to values identified in this Enclosure and section 3.0 until procedure revision is performed.

FUEL AND ROD GRAPPLE LOAD SETPOINTS

Description	Ref.	Memory	Setpoint	As Found	As Left
Rod Lowload Limit	SW5L	V1	170		
Rod Mast Lowload Unloaded	SW6L	V2	620		
Rod Mast Lowload Loaded	SW7L	V3	660		
Rod Retracted	SW5H	V5	820		
Innermast Overload	SW9H	V6	1360		
Fuel Heavy Underload	SW9L	V7	1700		
Fuel Heavy Overload	SW10H	V8	2800		
Fuel Lite Underload	SW11L	V9	1600		
Fuel Lite Overload	SW12H	V10	2700		
Mechanical Overload Setpoint	LS-34	N/A	≤3200		

Note: All load setpoints can be field changed to different value based on field conditions with concurrence of Spent Fuel Coordinator and Reactor or Refueling Engineer.

c) The hoist has two (2) methods of speed control, Jog and Normal (variable speed).

1) Hoist operation in the variable speed mode is performed using a pistol grip switch located on the control panel. The further the switch is turned from the neutral position, the faster the hoist speed

2) The Jog speed is internally set. Jog direction (up or down is controlled using a pistol grip switch located adjacent to the normal variable speed pistol grip switch.

22. The fuel handling hoist is equipped with load cutout switches to stop assembly movement on either an underload or an overload.

a) The overload setpoint is determined by the position of the Heavy/Lite switch on the control console.

1) When selected to "Heavy" (fuel assembly with a control rod) the overload limit is set not to exceed 2800 lbs.

2) When selected to "Lite" (fuel assembly without a control rod) the overload limit is set not to exceed 2700 lbs.

3) In order to raise the hoist when disengaged, the selector switch has to be in the "Lite" position.

b) The underload limit is set at 1700 pounds (1600 pounds when the fuel assembly does not contain a control rod) when the fuel grapple is engaged and the grapple tube is not in the down position. If the grapple is disengaged, or engaged in the down position, the underload limit is set at 600 pounds.

c) The underload is intended to limit the amount of insertion force placed on a fuel assembly as it is inserted into the core. The overload limit is set to limit the amount of withdrawal force exerted.

29. 035K6.03 001/2/2/RO#29/C/A 2.6/3.0/NEW/R/CR03701/
The following plant conditions exist:

- Plant is at 100% power.
- 'A' OTSG Operate Level transmitter (SP-1A-LT2) slowly fails high.
- The pen for 'A' OTSG on SP-1A-LIR1 is observed to rise offscale high.

Assuming no operator actions are taken, actual 'A' OTSG level will:

A.✓ lower, but stabilize at approximately 30".

B. lower, and remain offscale low.

C. remain constant because SASS will transfer to a good transmitter.

D. remain constant because this instrument provides no high level control.

Reasons:

A. Correct. Since the LIR on the MCB is rising, it can be determined that the failing instrument is the selected instrument. Since this will trigger the ICS overfill circuit, actual OTSG level will lower. As level lowers, the low level limit circuit should act to maintain OTSG level at ~ 30".

B. As level lowers, the ICS low level limit circuit should maintain OTSG level at ~30".

C. Since this is a slow failure, SASS will not transfer.

D. Plausible since different instrument ranges do provide different control functions. However, the Operate Level instruments do provide the high level (overfill) control function.

OPS 4-14, Obj. 4 & 7; OPS 4-14 Section 1-4.0.H.12; OPS 4-32 Section 1-5.0.A.1.c); OPS 4-09 Section 1-4.0.A; OP-501

RO - New

Reference(s) provided: None

e) RFR will also send a signal to the feedwater valve controllers. This signal will input a negative error, which will run the valves in the closed direction. This negative error will remain in affect until OTSG level decreases to a point 2.5 inches above the low level limit. At that point normal post trip level control (low level limit) will be restored.

1) The negative error will not be re-implemented if level increases.

f) The operator can defeat RFR at any time (even while activated on a reactor trip), by placing the RFR OFF/AUTO switch (located in ICS cabinet 5 row 6 module 2) to the OFF position.

g) This will remove any signals which have been input by RFR (if activated) or prevent activation, as applicable.

h) If operator control is required in a time frame that does not allow for operation of this switch, control can be obtained by placing the feedwater pump and valve hand/auto control stations in the hand position. This will allow normal manual control of the respective components.

11. Feedwater Loop Flow Error

a) Following the feedwater master and RFR input, loop feedwater demand is compared to loop feedwater flow. The resulting error signal will be used to control either the feedwater control valves (startup and/or low load) or the feedwater pump depending on current plant conditions. This logic will be discussed below.

12. OTSG High and Low Level Limits

a) OTSG level is monitored by the operating range and startup range level instruments and the indicated level is compared to the associated level limit setpoint (adjustable in the ICS cabinets).

b) If actual level is less than the high level setpoint (operating range) and greater than the low level setpoint (startup range), the flow error signal will be passed unchanged.

However, if level exceeds either limit, the output of the associated level limit circuit will become the controlling signal until level is returned to the allowable band or the flow error signal becomes the larger signal in the required direction of change.

OTSG Level	Controlling Signal
Within Allowable Range	Flow Error
Above High Level Limit	High Level Limit Circuit or Flow Error (whichever is smaller)
Below Low Level Limit	Low Level Limit Circuit or Flow Error (whichever is larger)

c) The high and low level limits are two separate auctioneer modules.

1) The low level limiter is located downstream of the high level limit to ensure a minimum OTSG level is maintained in the event of a failure of the operating range input to the high level limit.

13. Feedwater Pump and Valve Control

a) The flow error signal from the level limit circuits is used to control either the feedwater valves or pumps depending on plant conditions. This can best be explained by following the sequence of events during a plant startup.

b) During reactor startup OTSG level is maintained at the low level limit by the level limit circuits. The error signal generated is used to position the startup feedwater control valve. During this time the feedwater pumps are controlling on a ΔP signal which is used to modify the feedforward demand sent to the main feedwater pump from the loop feedwater master.

c) OTSG Operating Range

1) Provides 0-100% level indication on the Main Control Board and Remote Shutdown Panel.

- The lower level tap is located at 102".
- The upper level tap is located at 394".

2) In addition to indication, operating level provides a signal to the ICS for OTSG level control (High Level Limits)

3) Operating range level uses lower downcomer temperature for temperature compensation.

d) OTSG Low Range Level (EFIC)

1) Provides 0-150 inch level indications on the Main Control Board.

- The lower level tap is also 6 inches above the lower tube sheet.
- The upper tap is located 277 inches above the lower tube sheet.
- The top 127 inches of the level signal is electrically suppressed.

2) In addition to indication, low range level provides a signal to the Emergency Feedwater Initiation and Control System (EFIC) system for emergency feedwater control.

3) Low range level temperature compensation is calculated by EFIC.

e) OTSG High Range Level (EFIC)

1) High range level provides 0-100% level indications on the Main Control Board.

4. These instruments are marked in the control room by a small label on the instrument front.

5. For the instruments discussed in this lesson plan, the Regulatory Guide classification will be indicated if applicable.

   a) Many of the instruments that are covered by the requirement are discussed within the specific lesson plan for their associated system.

   b) Table 1 lists the instrument areas that are addressed at CR-3 under this requirement.

1-3.0 SYSTEM FLOWPATHS

A. NOT APPLICABLE

1-4.0 MAJOR COMPONENT DESCRIPTION

A. SMART AUTOMATIC SIGNAL SELECTOR (SASS)

1. The SASS system improves plant stability by providing automatic selection of ICS and NNI control functions to an alternate signal source in the event of a failure of the selected signal.

2. The SASS system utilizes a computer based monitoring system to detect process variable malfunctions.

   a) For each monitored parameter, two input signals are compared for deviation and rate of change.

   b) When the input signals vary by more than a set amount, a variable mismatch will be indicated.

   c) If one of the two signals is changing at a rate indicative of a signal failure, SASS will automatically select the good (stable) signal and prevent transfer to the faulted (changing) signal.

   d) In addition, the system is designed to minimize the affects of a loss of NNI-X or NNI-Y.

3. SASS Racks (Figure 1)

SASS INPUTS AND REDUNDANT INDICATIONS

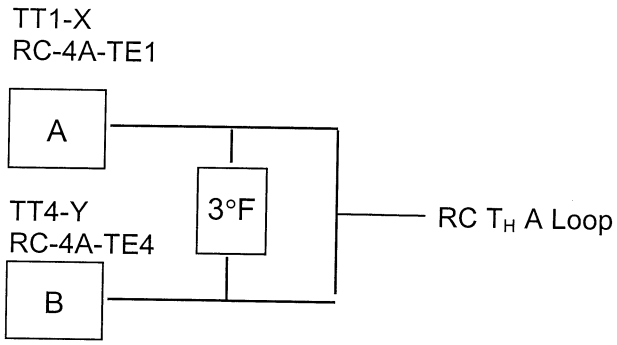

Selected indicator displayed on RC-4A-TI1;
Non-selected indicator displayed on computer point R212

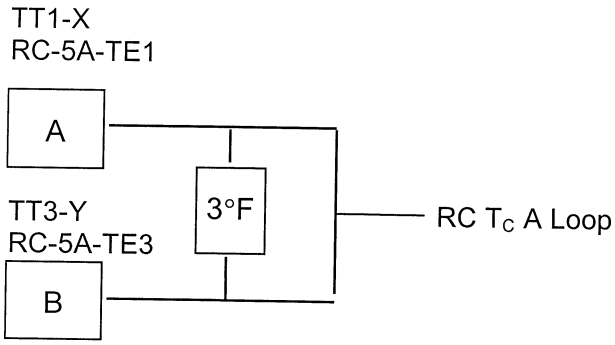

Selected RTD is displayed on RC-5A-TI2.
Computer points hardwired to:
RC-5A-TE1 R214
RC-5A-TE3 R215

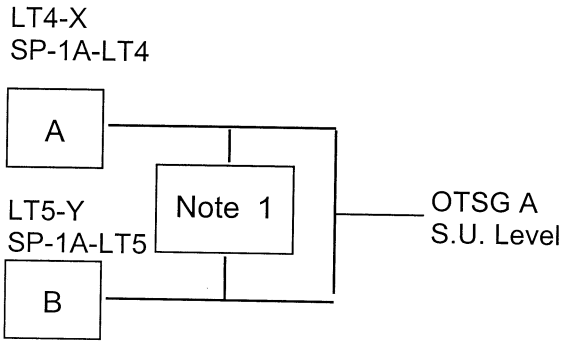

Selected transmitter displayed on SP-1A-LI2.
Non-selected transmitter displayed on computer point S287

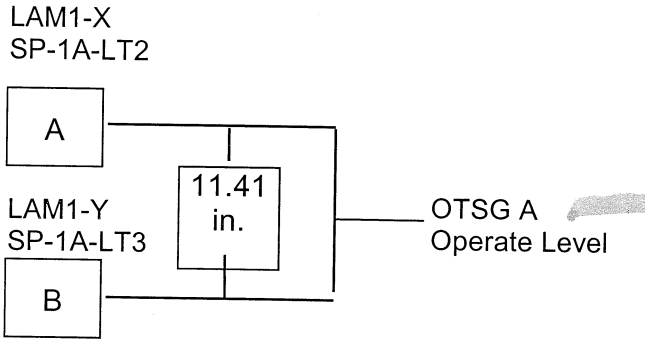

Selected transmitter displayed on SP-1A-LIR1.
Non-selected transmitter displayed on computer point S284

Note 1: > 7.81 when OTSG is ≤ 95.7" Level or > 15.63 when OTSG is > 95.7" Level.

30. 038EK3.06 001/1/1/RO#30/MEM 4.2/4.5/NEW/R/CR03701/
A step in EOP-6 "Steam Generator Tube Rupture" directs the operator to concurrently perform EOP-14, Enclosure 7, EFWP Management if EFW is required but no EFWPs are running.

For EOP-6, which ONE of the following choices represents the **least** preferred pump and the reason it is least preferred?

A.✓ EFP-2, because it can cause an undesirable cooldown at low decay heat.

B. EFP-2, because it cannot be isolated from the leaking OTSG.

C. FWP-7, because it is not safety related and lacks a safety related power supply.

D. FWP-7, because it has no auto-start and requires manual flow control.

Reasons:

A. Correct. Per the EOP-TBD cross-step document for EOP-6, EFP-2 is preferred only as a last resort since it can cause an undesirable cooldown at low decay heat rates.

B. Plausible since EFP-2 does require the use of steam from the OTSGs. However, the steam supply from the affected OTSG would already have been isolated at this point in the procedure.

C. Plausible since FWP-7 is not safety related, but it is listed in the basis document as the third preferred pump since it has an independent power source.

D. Plausible because FWP-7 does not have an auto-start and does not have automatic flow control. However, it is listed as the third preferred pump because it has an independent power source.

OPS 5-101, Obj. 3; EOP-TBD Cross-step document for EOP-6 Step 3.41; OPS 4-37 Step 1-4.0.L

RO - New

Reference(s) provided: None

EOP Step: 3.41
TBD Step: 9.2 **Section:** III.E **Deviation Type:** None
Generic Deviation: None
Justification: None
Step Basis:

This step verifies OTSG level is at or trending towards required level. OTSG level could be controlled from either MFW, EFW or AFW. If OTSG level is not at or trending toward required levels then alternate action will be required. If MFW is excessive or does not exist then EFW will be required. If EFW is not available, then Enclosure 7, EFWP Management will be performed to establish EFW. This enclosure provides instructions for ensuring that a source of EFW is in service and supplying the OTSGs, for whatever plant conditions may exist. The EFW system has two safety grade EFW pumps, both of which are completely independent of onsite or offsite AC power sources. It also includes an additional EFW pump which can be powered from onsite or offsite AC power, and a non-safety grade FW pump that can be powered from offsite AC or the Alternate AC diesel generator. Enclosure 7 provides instructions for operating all of these EFW sources. The preferred order for using the EF pumps as defined in Enclosure 7 is summarized below;

1. EFP-3 is the preferred source because it is independent of the ES diesel and offsite power.
2. EFP-1 - This pump is preferred second only if offsite power is available. If offsite power is not available, but both ES diesel are running then EFP-1 is preferred after FWP-7.
3. FWP-7 – This pump is preferred third because it also has an independent power source (AAC diesel).

EFP-2 – This is preferred only as the last resort. EFP-2 uses main steam which can cause an undesirable cooldown at low decay heat rates.

Setpoint Code: None **Setpoint Value:** None
References: None

EOP Step: 3.42
TBD Step: 17.1 **Section:** III.E **Deviation Type:** None
Generic Deviation: None
Justification:

This step is provided to support later directed GEOG actions to use SG drains to maintain SG level below the overfill setpoint. The blowdown header does not normally stay aligned to the main condenser while at power. Since this alignment involves filling and venting this line, it is started early in the event. Regarding control room actions, this step is simply a notification and does not impede EOP progression.

Step Basis:

This step directs performance of EOP-14, Enclosure 6 to align the blowdown header to the main condenser. This alignment involves filling and venting the blowdown line. It is started early in the event to support controlling OTSG levels to prevent approaching the TRACC limit.

Setpoint Code: None **Setpoint Value**: None
References: None

bearings so that residual oil does not burn and turn into carbon that could wipe the turbo charger bearings.

The other two pumps (1Ac and 1DC) circulate oil through the oil filter, oil cooler and then to the crankshaft bearings. The oil is maintained below the level of the camshaft and rocker arm assemblies.

Addition of oil to the engine should be through the square cover of the strainer box. Never open the round strainer covers while the engine is running. Hot oil is supplied to the area just below the strainer covers, under pressure to make sure that air is not sucked into the suction of the main oil and piston cooling pumps. If the round strainer covers are removed while the engine is running the engine will lose oil pressure.

If the Critical Start Oil System is shutdown for engine maintenance the oil level in the engine sump must be reduced. The engine accessories that are kept full of oil by the circulating pumps contain approximately 120 gallons of oil. When all lube oil pumps are shut down this oil will drain back to the sump and overflow the sump at the shaft seals.

L. AUXILIARY FEEDWATER PUMP (FWP-7)

1. FWP-7 is a horizontal, 9 stage, motor driven centrifugal pump located on the 95' elevation of the Turbine Building. The pump is rated at 806 gpm (6 gpm used for bearing cooling and seal injection) at 3300' TDH.

   a) Maximum runout flow during recirculation is 940 gpm.

   b) Maximum runout flow while feeding the OTSGs is 590 gpm.

2. The 900 HP motor for FWP-7 is powered from 4160V Reactor Auxiliary Bus 3.

3. FWP-7 and its associated components can be used on an "as available" basis to supply water to the OTSGs in the event of a loss of all main and emergency feedwater.

   a) Although FWP-7 is non-safety, non-seismic, non-emergency diesel generator backed, it is credited by the

NRC as a compensating feature in increasing secondary decay heat removal reliability.

4. FWP-7 is normally operated using a four position (STOP, NORMAL-AFTER-STOP, START, NORMAL-AFTER-START) spring return to NORMAL control switch located on the PSA section of Main Control Board.

   a) The pump can also be stopped from a local control station.

M. EGDG-1C (ALTERNATE AC DIESEL)

1. 4160V Reactor Auxiliary Bus 3 now has three possible power sources:

Normal:	6900V Reactor Aux Bus 3A
Alternate:	EGDG-1C
Under TSC direction:	A301 12kV line

2. OP-707C, Operation of the Alternate AC Diesel Generator, provides the guidance for powering up this bus from the Alternate AC Diesel.

N. AUXILIARY FEEDWATER CONTROL VALVES (FWV-216 AND FWV-217)

1. FWV-216 and –217 are air operated valves located on the 95' elevation of the Turbine Building.

2. The valves are used to supply flow from FWP-7 to the OTSGs. FWV-216 is used to supply the "A" OTSG and FWV-217 is used to supply the "B" OTSG.

3. The valves are normally operated using Bailey hand/auto control stations located on the PSA section of the Main Control Board.

   a) The valves are also equipped with handwheels to allow local operation.

   b) The control valves are designed to fail closed on a loss of air. The air supply for the valves is provided by a 10 HP compressor (FWP-9) located on the 95' elevation of the Turbine Building.

31. 039A4.04 001/2/1/RO#31/MEM 3.8/3.9/NEW/R/CR03701/
Which ONE of the following conditions would NOT cause the "EF Pump 2 Out of Service" alarm?

A.✓ ASV-204 closed with DC control power not available.

B. ASV-5 closed with DC control power not available.

C. MSV-56 closed.

D. MSV-55 closed.

Reasons:

A. Correct. ASV-204 closed (either with or without DC control power) will not cause an EFP-2 Out of Service alarm.

B. ASV-5 is a normally closed valve. However, with a loss of DC control power (i.e. the valve will not automatically open) the EFP-2 Out of Service alarm will be in.

C. MSV-56 is a normally open valve. Whenever it is closed the EFP-2 Out of Service alarm will be in.

D. MSV-55 is a normally open valve. Whenever it is closed the EFP-2 Out of Service alarm will be in.

OPS 4-37, Obj. 3; OPS 4-37 Section 1-4.0.E; AR-403 Window H-07-05

RO - New

Reference(s) provided: None

PSA-H ANNUNCIATOR RESPONSE	PSA-Z-07-05	**H-07-05**

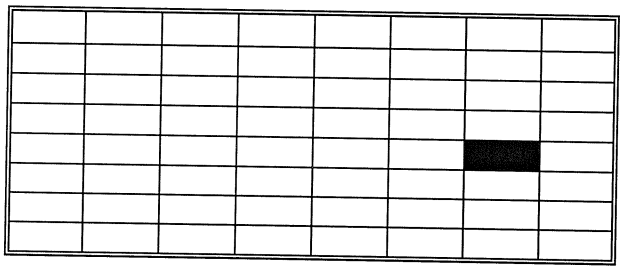

EF PUMP 2
OUT OF SERVICE

EVENT POINT 0100

INDICATED CONDITION:

- ASV-5 CLOSED WITH DC CONTROL POWER NOT AVAILABLE FOR > 5 SECONDS.
- MSV-55 CLOSED.
- MSV-56 CLOSED.

REDUNDANT INDICATION WHICH WILL VERIFY ALARM:

- ASV-5 POSITION INDICATOR.
- MSV-55 POSITION INDICATOR.
- MSV-56 POSITION INDICATOR.

OPERATOR ACTIONS FOR A VALID ALARM:

- INVESTIGATE LOSS OF CONTROL POWER TO ASV-5.
- INVESTIGATE CLOSURE OF MSV-55 OR MSV-56.
- IF EFP -2 BECOMES UNAVAILABLE IN MODES 1 THROUGH 4, THEN NOTIFY THE SECURITY SHIFT SUPERVISOR THAT EFP-2 IS UNAVAILABLE USING THE PHRASE: " THERE IS A POTENTIAL CHANGE IN DECAY HEAT REMOVAL METHODS".

DISCUSSION:

- IF THIS ALARM IS DUE TO THE ASV-5 CIRCUITRY, THEN IT MEANS ASV-5 IS CLOSED WITH NO CONTROL POWER AVAILABLE TO ALLOW AN AUTO OPEN DURING AN EFW ACTUATION.
- THE MSV-55 AND MSV-56 ALARMS ARE DUE TO FULLY CLOSED LIMIT SWITCHES. CONTROL POWER FOR ASV-5 IS SUPPLIED FROM DPDP-8B FUSE #6.

REFERENCES: DRAWING 208-008 AS-01

SENSING ELEMENT: ASV-5 LS (13), 2ASV-5 RELAY, MSV-55 LS (5) MSV-56 LS (14)

through a governor valve, which is an integral part of the turbine casing, before entering the turbine.

1) A Woodward governor that adjusts governor valve position to maintain desired speed controls turbine speed at approximately 4000 rpm.

c) In the event of an accident or transient that results in an EFIC actuation concurrent with a LOOP and a loss of "B" DC power, the "B" side emergency feedwater control valves and associated flow indications will be lost.

1) Under these conditions, a means for verifying EFP-2 flow is required to allow cross tying EFP-2 to the "A" emergency feedwater train.

2) A digital/bargraph indicator located above the PSA section of the Main Control Board provides redundant flow indication for EFP-2.

- This indicator (EF-62-FI) is powered from the "A" vital bus.

E. EFP-2 STEAM SUPPLY VALVES (MSV-55, MSV-56, ASV-5, AND ASV-204)

1. ASV-5 and ASV-204 are motor operated valves located on the 95' elevation of the Intermediate Building in the area of EFP-2

a) ASV-5 and ASV-204 are powered from DPDP-8B and DPDP-8A, respectively.

b) ASV-5 and ASV-204 are normally operated using three position (CLOSE, AUTO, OPEN) spring return to AUTO control switches located on the PSA section of the Main Control Board.

1) The valves can also be operated from local control stations located near EFP-2. The control stations consist of OPEN and CLOSE pushbuttons and red and green valve position indicating lights.

c) Interlocks:

1) ASV-5 receives an open command when the "B" emergency feedwater train is actuated, and will fail "as is" on a loss of power.

2) ASV-204, which receives no automatic signals, will fail "as is" on a loss of power.

2. MSV-55 and 56 are motor operated valves located on the 119' elevation of the Intermediate Building on the main steam lines.

a) MSV-55 and –56 are powered from DPDP-8B.

b) MSV-55 and -56 are normally operated using three position (CLOSE, AUTO, OPEN) maintain position control switches located on the PSA section of the Main Control Board.

c) Interlocks:

1) MSV-55 and MSV-56 receive open commands when the "B" emergency feedwater train is actuated. The valves will fail "as is" on a loss of power.

d) During normal operation, MSV-55 and –56 are maintained in the open position, with their control switches in AUTO.

e) Following an EFIC actuation, placing the control switches for MSV-55 and –56 to the CLOSE position will bypass the EFIC signal and isolate steam to EFP-2.

F. EFP-2 TRIP THROTTLE VALVE (ASV-50)

1. ASV-50 is the trip/throttle valve for the turbine driven emergency feedwater pump. The function of this valve is to act as a quick closing or emergency trip valve that interrupts steam flow to the turbine when an overspeed condition is sensed.

2. The valve is designed with its inlet above the valve seat and its outlet below the seat so that, in addition to the weight of the moving parts, internal pressure will assure that the valve disc seats

32. 039K5.05 001/2/1/RO#32/C/A 2.7/3.1/NEW/R/CR03701/
The following plant conditions exist:

- A 75 gpm tube leak has occurred on the 'B' OTSG.
- During the power reduction, a loss of offsite power and reactor trip occurred.
- RCS pressure is 1950 psig and rising slowly.
- RCS temperature is 555°F.

The CRS directs a cooldown be commenced per EOP-6. The cooldown should be established using ___(1)___ and the most limiting component for the specified cooldown rate limit is the ___(2)___.

A. (1) Turbine Bypass Valves
(2) pressurizer surge line

B. (1) Turbine Bypass Valves
(2) reactor vessel beltline

C. (1) Atmospheric Dump Valves
(2) pressurizer surge line

D.✔ (1) Atmospheric Dump Valves
(2) reactor vessel beltline

Reasons:

A. Plausible since the TBVs would normally be preferred during a tube rupture and the pressurizer surge line is scheduled for additional inspections.

B. Plausible since the TBVs would normally be preferred during a tube rupture.

C. Plausible since the pressurizer surge line is scheduled for additional inspections.

D. Correct. With the loss of offsite power all CWPs have been lost. As a result, the TBVs are not available and the ADVs would be used. While this event does give an existing tube leak, the cooldown rates in this event are no more limiting than any other situation. All normal cooldown rates (since ~ 8 EFPY) are based on the reactor vessel beltline region due to neutron embrittlement.

OPS 4-66, Obj. 8; OPS 4-66 Sections 1-4.0.A.2 & 1-4.0.E.6; ITS 3.4.3 Basis

RO - New

Reference(s) provided: None

BASES

BACKGROUND (continued)

Material toughness properties of the ferritic materials of the reactor vessel are determined in accordance with the NRC Standard Review Plan (Ref. 3), NRC Regulatory Guide 1.99 (Ref. 4), and additional reactor vessel requirements. These properties are then evaluated in accordance with Reference 2.

The actual shift in the nil ductility reference temperature (RT_{NDT}) of the vessel material will be established periodically by removing and evaluating the irradiated reactor vessel material specimens, in accordance with ASTM E 185 (Ref. 5) and Appendix H of 10 CFR 50 (Ref. 6). The operating P/T limit curves are adjusted, as necessary, based on the evaluation findings and the recommendations of Reference 2.

The P/T limit curves are composite curves established by superimposing limits derived from stress analyses of the reactor vessel, closure head, and steam generators. At any specific pressure, temperature, and temperature rate of change, one location within the RCS will dictate the most restrictive limit. Early in core life, different locations are more restrictive, and, thus, the curves are composites of the most restrictive regions. However, after approximately 8 EFPY of neutron embrittlement, the reactor vessel beltline became the limiting component over the entire span of the CR-3 curves.

The heatup curve represents a different set of restrictions than the cooldown curve because the directions of the thermal gradients through the vessel wall are reversed. The thermal gradient reversal alters the location of the tensile stress between the outer and inner walls. The calculation to generate the ISLH testing curve uses a different safety factor on pressure (per Ref. 2) than does the heatup and cooldown curves. The ISLH testing curve also extends to the RCS design pressure of 2500 psia.

The P/T limit curves and associated temperature rate of change limits are developed in conjunction with stress analyses for large numbers of operating cycles and provide conservative margins to nonductile failure. Although created to provide limits for normal operation, the curves also can be used to determine if an evaluation is necessary following an abnormal transient.

(continued)

d) Moisture separator reheater (MSR) 3A second stage reheat steam through motor operated isolation valve MSV-29.

e) The gland steam system through motor-operated isolation valve MSV-57.

4. Main Steam Line B-2:

a) Atmospheric Dump Valve MSV-26.

b) Turbine-driven emergency feedwater pump (EFP-2) through DC motor-operated stop check valve MSV-56.

c) Moisture separator reheater (MSR) 3C second stage reheat steam through motor-operated isolation valve MSV-31.

5. Each main steam line has installed drain traps to remove moisture from the line. The steam traps are located at low spots on the main steam piping; the trap outlets are routed to the main condenser.

1-4.0 MAJOR COMPONENT DESCRIPTION

A. ATMOSPHERIC DUMP VALVES

1. MSV-25 and MSV-26 are 6-inch, air-operated control valves located in the Intermediate Building on the 119' elevation. The atmospheric dump valves (2 ADVs) are is capable of handling approximately 7.5% of the total post-reactor trip steam flow. This corresponds to a relief capacity of 837,000 lbm/hr at steam conditions of 600°F and 900 psia, and 602,592 lbm/hr. at saturated conditions of 540°F and 948 psig.

2. The valves are used to control steam generator pressure when steam cannot be dumped to the main condenser. The main condenser is considered to be unavailable to receive steam when there are no circulating water pumps in operation or a low condenser vacuum exists (≤5 in Hg vacuum)

3. The valves may be operated from the main control room in the automatic or manual mode. In the automatic mode, the valves will open to maintain steam generator outlet pressure at 1025 psig. In the manual mode, the control room operator may position the

e) Testing SV1 and SV2 (SP-332) at Power:

1) SV5 and SV6 function identically to SV1 and SV2, and are used to maintain the MSIVs in the open position when testing SV1 and SV2 at power.

2) When SV5 and SV6 are selected for control SV4 will reposition to align control air from SV5 and SV6 to the 4-way valve.

3) A detailed discussion of this test is included in OPS- 4-31, Emergency Feedwater Initiation and Control System.

8. Each MSIV is equipped with 3-way thermal link, spring-actuated ball valves in the air supply lines that will close the valve in the event of a fire in the intermediate building. The thermal links are set to melt at 500°F.

a) When the thermal links melt, the ball valves reposition to block the air supply to the MSIV and vent off the air pressure that is holding the valve open, allowing the valve to close.

b) Both thermal link valves must actuate in order for the MSIV to close.

E. TURBINE BYPASS VALVES

1. The turbine bypass valves are located on the 119' elevation of the turbine building on the south side of the main condenser. The four are operated in pairs. MSV-9 and MSV-10 are supplied from the "A" steam generator, and MSV-11 and MSV-14 are supplied from the "B" steam generator.

2. The function of the turbine bypass valves is to control steam header pressure when the main turbine is not on line. Each pair of valves is capable of passing up to 7.5% of total steam flow.

3. The valves are controlled from the ICS section of the Main Control Board using a Bailey HAND-AUTO station for each pair of valves.

a) When a Bailey station is in HAND the operator may control the valves as required by plant conditions.

b) When a station is in AUTO, the valves are controlled by the Integrated Control System (ICS) based on an operator-adjustable setpoint.

1) The setpoint controller is on a separate Bailey station located directly above the HAND-AUTO stations.

4. The pressure setpoint that the bypass valves automatically control at is a function of plant conditions.

1) If the turbine is not on the line and the reactor is not tripped, the valves will control header pressure at setpoint (normally 885 psig).

2) If the main turbine is operating at > 15% electrical output, the bypass valve setpoint is automatically increased by 50 psig to 935 psig. This is done to prevent the bypass valves from competing with the main turbine for header pressure control.

3) When the reactor is tripped, the bypass valve control setpoint is increased by 125 psi to 1010 psig. This is done to limit the amount of primary system cooldown and associated decrease in pressurizer level following the trip.

5. Local manual operation of the bypass valves can be performed using the handwheels located on the valves.

6. The turbine bypass valves will fail closed on loss of instrument air. If a loss of all circulating water pumps or loss of condenser vacuum (<5 in Hg vacuum) occurs, the valves will close and cannot be operated from their Bailey control stations.

F. MISCELLANEOUS VALVES

1. MSV-55 and MSV-56 - Main steam supplies to the turbine driven emergency feedwater pump (EFP-2). These valves, which are normally open, receive an auto open signal on an Emergency Feedwater Initiation. Both valves are powered from DPDP-8B.

33. 041G2.4.35 001/2/2/RO#33/MEM 3.3/3.5/NEW/R/CR03701/
A step in EOP-12, Station Blackout, states:

ACTION: Align backup air supply to ADVs.

DETAIL: Notify SPO to open IAV-676 "ADV BACKUP AIR SUPPLY ISO".

IAV-676 is located on the ___(1)___ and must be opened to provide backup air to ensure the ___(2)___ hour SBO coping requirement is met.

A.✔ (1) 119' turbine building
(2) four

B. (1) 119' turbine building
(2) eight

C. (1) 95' turbine building
(2) four

D. (1) 95' turbine building
(2) eight

Reasons:

A. Correct. While the air bottles are located on the 95' elevation, the valve is located on the 119'. The SBO coping requirement is 4 hours.

B. The SBO coping requirement is 4 hours, not 8.

C. While the air bottles are located on the 95', IAV-676 is located on the 119'.

D. IAV-676 is located on the 119', and the SBO coping requirement is 4 hours, not 8.

OPS 4-66, Obj. 2 & 3; OPS 4-66 Section 1-4.0.A.6; EOP-12 Step 3.5; DBD 6/10.

RO - New

Reference(s) provided: None

3.0 FOLLOW-UP ACTIONS (CONT'D)

ACTIONS	DETAILS
3.4 ___ Verify EFW is operating and flow is controlled. [Rule 3, EFW/AFW Control]	• Ensure level in available OTSGs is at or trending toward required level. See Table 1
___ IF EFW is NOT operating, THEN ensure feedwater flow exists.	1 ___ Depress "EFW INITIATE" push buttons on EFIC channels A and B. 2 Ensure at least 1 EFWP starts and flow is controlled: ___ EFP-3 ___ EFP-2 [Rule 3, EFW/AFW Control] 3 ___ IF no EFWPs are running, THEN **CONCURRENTLY PERFORM** EOP-14, Enclosure 7, EFWP Management.
3.5 ___ Align backup air supply to ADVs.	• Notify SPO to open IAV-676 "ADV BACKUP AIR SUPPLY ISO" (119 ft TB behind FWHE-3B).

valves as required using the valve HAND-AUTO control stations located on ICS portion of the Main Control Board.

4. Local manual operation of the atmospheric dump valves can be performed using the handwheels located on the valves.

5. The atmospheric dump valves use the same type of thermal link fire protection as the MSIV. In the event of a fire in the intermediate building, the air supply to the valve operator will be blocked and vented, ensuring the dump valves close.

6. In the event of loss of instrument air, the valves can be operated for up to 4 hours using backup high-pressure air bottles. When the bottles are placed in service, pressure regulators will maintain approximately 85 psig air pressure to the valves. This is pressure is sufficient to operate the valves at the same speed as the normal instrument air supply.

B. MAIN STEAM LINE RADIATION MONITORS (RM-G25, 26, 27, 28)

1. The main steam line radiation monitors are designed to detect leakage from the primary to the secondary through the once-through steam generators. The detectors are located in the intermediate building just outside of the reactor building penetrations. RM-G25 and RM-G28 are located on the atmospheric dump valves and RM-G26 and RM-G27 are located on the B-1 and A-2 steam lines. Indications and recorders associated with the detectors are located on the back of the Main Control Board.

2. Operation of the steam line monitors is discussed in OPS-4-25, Radiation Monitoring System.

C. MAIN STEAM SAFETY VALVES

1. The four main steam safety valves (MSSVs) on each main steam line are located upstream of the main steam isolation valves within the Intermediate Building. The lowest relief setpoint valves (two per OTSG) are set at 1050 psig, with the remaining valves set at staggered lift setpoints up to 1100 psig. The use of staggered setpoints ensures that only the number of valves needed to provide the required relief capacity actuate, reduces the potential for valve chattering, and provides for a more controlled release of steam than would occur if all the valves actuated at the setpoint.

3.0 COMPONENT PARAMETERS

COMPONENT/PARAMETERS	REASON/SOURCE	INTERFACE
Atmospheric Dump Valves (ADVs) Tag Numbers: MSV-25, MSV-26		
ADV design flow capacity = 418,500 lbm/hr steam at 600°F, 900 psia (each ADV).	*The CR-3 Safety Analysis assumed this ADV flow for the Steam Generator Tube Rupture (SGTR) Loss of Electric Power, and the Steam Line Failure events. The sizing of the ADVs was based on the capability to remove RCS decay heat and RC pump heat at hot shutdown (approximately 1 minute post trip) with a single ADV. The second ADV would act as a redundant heat sink.*	The **Instrument Air (IA)** system provides compressed air for ADV motive power.
ADVs are required to have a backup source of motive power.	*To comply with the operability requirements for the 4 hour coping period following an SBO.*	Bottled Air (IA) provides a backup source of compressed gas for ADV motive power following an SBO. Key Parameters: Air Flow Rate (cfm) Air Pressure (psig)
	NOTE: Functioning of the ADVs for a SGTR was modeled to show acceptance of the worse case dose release. Per Ref. 10, failure of the ADVs during accidents will not be detrimental to the mitigation of the accident.	The **HVAC (AH)** system maintains compartment temperature within design limits. Key Parameters: Heat Removal (Btu/hr)
	References 10, 21, 45	
FSAR	**FSAR, Section 14.2.2.2, 14,1.2.8, 14.2.2.1**	

34. 045K1.18 001/2/2/RO#34/C/A 3.6/3.7/NEW/R/CR03701/

Reactor power is 70% when the A MFWP trips. During the transient the following parameters are noted:

- Rx Power	55%
- RCS Pressure	2250 psig
- Main Condenser Vacuum	6" HgA
- Autostop Oil Pressure	40 psig

Which ONE of the following represents the procedure that should be in use?

A. AP-510 Rapid Power Reduction

B. AP-545 Plant Runback

C. AP-660 Turbine Trip

D.✓ EOP-2 Vital System Status Verification

Reasons:

A. While a rapid power reduction may be useful during degrading turbine conditions to reduce power to <45%, conditions have already degraded such that a Rx trip is necessary.

B. While this procedure would have been in effect following the MFWP trip, it would now be superceded by EOP-2.

C. If Rx power were less than 45%, the turbine could be tripped without a Rx trip. However, Rx power is 55% so a Rx trip is necessary.

D. Correct. With autostop oil pressure < 45 psig and Rx power > 45% a Rx trip should have occurred and EOP-2 would be applicable.

OPS 4-12, Obj. 4; OPS 4-12 Section 2-13.0 Table 1

RO - New

Reference(s) provided: None

2-13.0 TABLE 1 – REACTOR TRIP SUMMARY

Trip Variable	Number of Sensors	Steady State Normal Range	Allowable Trip Setpoint
Nuclear Overpower	4 flux sensors	2-100%	High Setpoint: ≤ 104.9% RTP(d) Low Setpoint: ≤ 5% RTP(e)
Nuclear Overpower based on RCS flow and axial imbalance	4 two-section flux sensors, 8 ΔP flow sensors	NA	Allowable values not to exceed the limit in the COLR(f)
RCS Outlet Temperature-High	4 temperature sensors	532-604˚F	≤ 618˚F
RCS Pressure Variable Low	4 pressure sensors, 4 temperature sensors	Variable	≥ (11.59T-5037.8) psig(a)(f)
RCS Pressure	4 pressure switches	2090-2200 psig	≤ 2355 psig (high) ≥ 1900 psig (low)(f) ≤ 1820 psig (high)(shutdown bypass)(e)
Reactor Containment Vessel Pressure-High	4 pressure switches	0 psig	≤ 4 psig
Anticipatory Reactor Trip-Both Main Feedwater Pumps	4 control oil pressure switches per pump	NA	≥ 55 psig on both pumps(b)
Anticipatory Reactor Trip-Main Turbine	4 auto-stop oil pressure switches	NA	≥ 45 psig(c)
Reactor Coolant Pump Power Monitors	4 current transformers, 4 potential transformers	Variable	More than one pump drawing ≤ 1152 kW or ≥ 14,400 kW

(a) Temperature in ˚F
(b) Trip bypassed below 20% of rated thermal power
(c) Trip bypassed below 45% of rated thermal power
(d) When not in shutdown bypass operation
(e) During administratively controlled shutdown bypass operation
(f) Each channel bypassed during shutdown bypass operation

35. 054AA1.03 001/1/1/RO#35/C/A 3.5/3.7/NEW/R/CR03701/
The following plant conditions exist:

- A TS required shutdown is in progress due to both SWP-1A and SWP-1B inoperable and unavailable.
- At 50% power, the B MFWP was secured for governor maintenance.
- A tagging error caused a loss of the A MFWP and subsequent plant trip.
- On the plant trip, a Loss of Offsite Power occurred.

Which ONE of the following represents a list of components that are available based on the above conditions:

A. MUP-1A and EFP-1

B. MUP-1B and EFP-2

C. MUP-1B and EFP-1

D.✓ MUP-1A and EFP-2

Reasons:

With the LOOP, power is lost to SWP-1C. Since both SWP-1A and SWP-1B are already unavailable, a total loss of SW has occurred.

A. MUP-1A can be cooled by DC and would be available. EFP-1 is SW cooled, and would not be available.

B. MUP-1B cooling can only be provided by SW, so it would be unavailable. EFP-2 oil cooling is provided by EFW flow from its own discharge.

C. MUP-1B can only be cooled by SW. EFP-1 motor and gear unit oil are cooled by SW. Both would be unavailable.

D. Correct. MUP-1A is normally cooled by SW, but can be cooled by DC. EFP-2 oil cooling is provided by EFW from its own discharge.

OPS 4-56, Obj. 8; OPS 4-56 Section 1-6.0; OPS 4-37 Section 1-4.0.D; OPS 4-52 Section 1-4.0.S.5

RO - New

Reference(s) provided: None

1-6.0 SYSTEM INTERRELATIONS

A. AH The SW system provides cooling water to the three Reactor Building Fan Cooling Coil Assemblies and Fan Motors under emergency conditions.

B. SF The SW System provides cooling water flow to the Spent Fuel Coolant Pump Air Handling Units.

C. CA The SW System provides cooling water to the Pressurizer Sample Cooler and the two Steam Generator Sample Coolers.

D. PASS The SW System provides cooling water to the Post Accident Sampling System.

E. CH The SW System provides cooling water to the Control Complex Chilled Water System during normal operations. The Chilled Water System provides cooling to SWHE-2.

F. CI The CI System provides cooling water to the RB Fan Assemblies Cooling Coils and Fan Motors during normal operations.

G. DC The SW System can be used to provide an alternate source of cooling water to the High Pressure Injection Pump MUP-1C.

H. DO The SW System can be used to provide flush water to the DO System (applicable to the Raw Water Pumps).

I. DR The SW System provides cooling water to the Control Rod Drive Mechanism Stator Water Jacket Assembly Coolers.

J. EF The SW System provides cooling water to the Motor-Driven Emergency Feedwater Pump (EFP-1) Lube Oil Cooler and Motor Cooler.

K. ES The ES System provides the SW System with a signal to automatically start the Emergency Duty SW Pumps. The ES signal also isolates various non-essential loads from the SW System. In addition, the ES signal causes the cooling water for the RB Fans Cooling Coils and Fan Motors to switch from CI to SW.

L. IA The Instrument Air System provides motive force for pneumatic valves and instruments in the SW System.

M.	MU	The SW System provides cooling water to the three Letdown Coolers, two Seal Return Coolers, and the Make-up Pump 1B Motor and Lube Oil Coolers. SW is the normal source of cooling water to MUP-1A and can be used as an alternate source for MUP-1C (normally cooled by the DC System).
N.	NG	The Nitrogen System provides nitrogen to the SW system for Surge Tank pressurization.
O.	RC	The SW System provides cooling water to the Reactor Coolant Pumps Seal Heat Exchanger/Cover Heat Exchanger, Motor Upper Bearing Cooler, Motor Lower Bearing Cooler, and Motor Air Cooler.
P.	RM	The Radiation Monitoring System (RM) provides a means to detect radioactive contamination within the SW System.
Q.	RW	The SW System transfers heat from the various loads to the Nuclear Services and Decay Heat Seawater System (RW) through the SW Heat Exchangers. The SW System also provides cooling water for the RW Normal and Emergency Duty Pump Motors.
R.	SC	The SC System serves as an alternate source of cooling water for the Control Complex Chillers (CH), which are normally cooled by the SW System. The SW System can also be used to cool components in the SC System (IA Compressor and Water Box Priming Pumps).
S.	SF	The SW System provides cooling water to the Spent Fuel Coolers.
T.	SS	The Secondary Sampling System provides the ability to locally sample the SW System water.
U.	WD	The SW System provides cooling water to the Waste Gas Compressors. The WD-Gaseous Waste System accepts nitrogen that is bled off or relieved from the SW Surge Tank.
V.	WT	The Cycle Makeup Water System (WT) provides demineralized makeup water to the SW surge tank.

c) The pumps are qualified for up to two months post accident operation, provided flow is throttled to ≤ 545 gpm prior to 72 hours into the accident (vendor recommendation).

d) The required NPSH at 500 gpm is 30' and 34' for 600 gpm.

e) Discharge Stop check valves MUV-2 (MUP-1C), MUV-10 (MUP-1C) , and MUV-6 (MUP-1B) have their required positions listed in Enclosure 1 of OP-402. The required position is based on Emergency Diesel Generator loading considerations (flowrate through pump) and varies from partially throttled to full open as determined by testing.

2. The pumps have water lubricated mechanical seals. Water for seal lubrication is supplied from the discharge of the pump through a cyclone separator.

3. The radial and thrust bearings are forced lubricated.

4. The pumps and motors are coupled through speed increasers that have their own lubrication systems.

5. Cooling water to the pumps is supplied from nuclear services closed cycle cooling (SW) and/or decay heat closed cycle cooling (DC). The normal cooling water lineup is as follows:

a) MUP-1A - SW (Normal), DC train "A" (Alternate)

b) MUP-1B - SW only

c) MUP-1C – DC train "B" (Normal), SW (Alternate)

6. The 700 HP pump motors are powered from the following sources:

a) MUP1A – 4160V ES Bus 3A

b) MUP-1B - 4160V ES Bus 3A or 3B (normally 3A)

c) MUP-1C – 4160V ES Bus 3B

d) There is a breaker cubical for MUP-1B in both the "A" and "B" 4160V ES busses, but only one circuit breaker for the

C. HOTWELL TO EFP PUMP SUCTION VALVES (EFV-1 AND EFV-2)

1. EFV-1 and –2 are motor operated isolation valves located on the 95' elevation of the Intermediate Building in the same area as the emergency feedwater pumps.

2. During normal operation EFV-1 and –2 are maintained locked closed with their power supplies turned off. In the event the valves have to be operated, procedural guidance directs the operators to unlock and manually open the valves.

D. EMERGENCY FEEDWATER PUMPS (EFP-1 AND 2)

1. EFP-1 and EFP–2 are located side by side on the 95' elevation of the Intermediate Building.

2. The pumps are identical horizontal 7 stage pumps, each rated for 740 gpm at 1300 psig. Minimum discharge pressure required by SP-349A/B is 1410 psig for EFP-1 and 1430 psig for EFP-2.

   a) Slinger rings that sling oil from the bearing reservoirs onto the bearings lubricate the bearings on the pumps.

   b) Pump bearing oil cooling and stuffing box cooling water is supplied from the discharge of the pump.

3. An 800 HP motor powered from the "A" 4160V ES Bus drives EFP-1.

   a) The pump assembly is equipped with a speed increasing gear installed between the motor and the pump.

      1) The gear has its own lubrication system consisting of a lube oil pump driven from the gear shaft, a filter and an oil cooler.

   b) The motor air cooler and the gear unit oil cooler are cooled by the nuclear services closed cycle cooling system.

   c) EFP-1 is normally operated using a five position (STOP, NORMAL-AFTER-STOP, START, NORMAL-AFTER-START, PULL-TO-LOCK) spring return to NORMAL

control switch located on the PSA section of the Main Control Board.

d) Interlocks:

1) Engineering Safeguards will generate a trip signal to EFP-1 on a low pressure injection actuation coincident with a loss of offsite power (LOOP). This trip can be defeated if EFP-2 is unavailable and feedwater is required. Defeating this trip is accomplished by placing the trip defeat control switches in ES Actuation Cabinets 1, 2, and 3 to DEFEAT.

2) EFP-3 running will generate a trip signal to EFP-1.

- The system piping configuration prohibits having both EFP-3 and EFP-1 running simultaneously. Since EFP-3 is the preferred pump, EFP-1 will receive a trip signal whenever EFP-3 is running.

4. EFP-2 is driven by a single stage, solid wheel "Terry" turbine.

a) The turbine bearings are slinger ring lubricated and receive their cooling water from the pump discharge.

b) The pump governor is equipped with an oil cooler that is cooled by the emergency feedwater from the pump discharge.

5. The normal steam supply for the turbine is main steam through normally open DC powered valves MSV-55 and MSV-56.

a) Steam may also be supplied to EFP-2 from Units 1 and 2 through the Unit 3 auxiliary steam system. Alignment of this steam supply is a manual operation.

b) When the pump is to be started an open signal is sent to the pump steam inlet valves ASV-5 and/or ASV-204. Steam then passes through the trip/throttle valve ASV-50, which serves the purpose of isolating steam to the turbine in the event of an overspeed condition. Steam then passes

36. 055EA2.01 001/1/1/RO#36/MEM 3.4/3.7/NEW/R/CR03701/

The plant has experienced a Station Blackout and a loss of all instrument and station air. Which ONE of the following describes the effect on MUV-49 (Letdown Isolation) and MUV-51 (Letdown Orifice Bypass)?

	MUV-49	MUV-51
A.	closed	closed
B.	open	closed
C.✔	closed	as-is
D.	open	as-is

Reasons:

Various valves in the makeup system are designed with an air failure protection system. These valves are equipped with solenoid valves that de-energize on a loss of system header pressure to lock in the remaining air to hold the valve in as-is.

A. MUV-51 is air to open, but it is equipped with an air failure protection solenoid. It will remain as-is.

B. MUV-49 will fail closed. MUV-51 is air to open, but it is equipped with an air failure protection solenoid.

C. Correct. MUV-49 will fail closed on a loss of air. MUV-51 is equipped with an air failure protection solenoid (de-energized at 32 psig) which will maintain the valve as-is.

D. MUV-49 will fail closed.

OPS 4-52, Obj. 3 & 7; OPS 4-52 Section 1-4.0.E & G; OP-411 Enclosure 7

RO - New

Reference(s) provided: None

LOSS OF INSTRUMENT AIR EQUIPMENT FAILURE MODES

Equipment ID	Description	Failed Position
MSV-25, MSV-26	ADVs	Closed Note-2
MSV-59, MSV-60, MSV-61, MSV-62	MS purge to MSRs	Closed
MSV-109, MSV-110, MSV-111, MSV-112	Drain trap bypass	Open
MSV-130, MSV-148	OTSG blowdowns	Closed
MSV-411, MSV-412, MSV-413, MSV-414	MSIVs	Closed Note-1
MUV-16	Seal Injection Control	As-Is
MUV-31	PZR make-up control	As-Is
MUV-49	Letdown isolation	Closed
MUV-50	Letdown orifice isolation	Closed
MUV-51	Letdown Orifice bypass	As-Is
MUV-90, MUV-91, MUV-96, MUV-97	Post-filter isolation	Closed
MUV-108	Made-up control	Closed
MUV-116, MUV-117	MU demin	Closed
MUV-124	MU demin	Closed
MUV-133, MUV-134	MU demin	Closed
MUV-144	Cation demin bypass	Open
MUV-145, MUV-146	Cation demin isolation	Closed
MUV-200, MUV-201	MU demin bypass	Closed
MUV-242, MUV-243, MUV-244, MUV-245	Pre-filter isolation	Closed
MUV-253	RCP common bleedoff	Closed Note-1
MUV-541	MUT feed line isolation	Closed
MUV-586	A2/B1 cross tie	Open
MUV-587	A1/B2 cross tie	Open
RWV-150	RW Recirc Valve	Closed
SCV-3, SCV-4	SCP discharges	As-Is Note-1
SCV-12	SC to generator cooling	Open

Note-1: Indicated component has an Air Reservoir; time period until air is lost may vary due to reservoir size, air usage and air leaks.

Note-2: Valve has back up HP Air Bottle for operation when air is lost.

D. LETDOWN ISOLATION VALVE (MUV-567)

1. MUV-567, which is located in the "C" letdown cooler room, is a motor operated gate valve powered from ES MCC 3A3.

2. MUV-567 is operated from the Main Control Room using a three-position (CLOSE, NORMAL, and OPEN), spring-return to NORMAL control switch located on the PSA panel. The valve may also be operated from the Remote Shutdown Panel (if in service) or from its circuit breaker.

3. MUV-567 is a containment isolation valve and receives a close signal on an RBIC actuation or an HPI Diverse isolation signal.

   a) Due to the fact that it is not affected by a loss of NNI or ICS power, MUV-567 can be used to isolate letdown on a loss of NNI or ICS power.

E. LETDOWN ISOLATION VALVE (MUV-49)

1. MUV-49 is an air operated (air to open and spring with air assist to close) valve located in the overhead of the 95'elevation of the Auxiliary Building next to the containment wall.

2. MUV-49 is normally operated from the Main Control Room using a three position (CLOSE, NORMAL, OPEN) spring-return to NORMAL control switch located on the ES "B" section of the Main Control Board. It can also be operated from a local control station near the valve. Or from the Remote Shutdown Panel if in service, using a two position (OPEN, CLOSE) maintain position switch. MUV-49 is powered from DPDP 8B.

3. MUV-49 is a containment isolation valve and receives a close signal on an RBIC actuation or an HPI Diverse isolation. MUV-49 will also automatically close if letdown temperature exceeds 135°F for $\geq$ 1 seconds.

   a) This interlock protects the demineralizers and filters from high temperatures in the event that cooling is lost to the letdown coolers.

   b) A bypass switch for the high temperature interlock is located on the Main Control Board next to MUV-49. This switch allows MUV-49 to be reopened after the high

temperature interlock actuates without having to wait for the water in the lines to cool below 135°F.

c) MUV-49 is equipped with an air accumulator to ensure there is sufficient air to close the valve if containment isolation is required.

F. BLOCK ORIFICE

1. The block orifice is located on the 119' elevation of the Auxiliary Building in the valve area near the penetration area. It is designed for a pressure drop of 2115 psid that provides a controlled letdown flow of 45 gpm when RCS pressure is 2155 psig.

a) The 45-gpm-flow rate allows approximately one RCS volume to be processed through the makeup and purification system every 24 hours.

The block orifice has two bypass lines to allow letdown flow in excess of 45 gpm. One line has a manually operated bypass valve; flow through the second line is controlled by MUV-51. If it is desired to reduce letdown flow to less than 45 gpm, MUV-50 is shut to isolate the block orifice, and flow is adjusted using one of the bypass lines.

b) MUV-50 is an air-operated valve located in the block orifice room on the 119' elevation of the Auxiliary Building. It is normally operated from the PSA section of the Main Control Board using a three position (CLOSE, NORMAL, OPEN) spring return to normal control switch.

2. Two relief valves (MUV-76 and MUV-150) are located downstream of the block orifice and the bypass valves The valves, which are located in the same area as the block orifice, have a lift setpoint of 150 psig to provide overpressure protection due to an inadvertently blocked letdown flow path.

a) The valves relieve to the Auxiliary Building sump.

b) The internals of check valve MUV-252 have been removed to ensure that MUV-76 and MUV-150 will protect against over pressure when the makeup system is cross-connected with the decay heat system.

G. LETDOWN FLOW CONTROL VALVE (MUV-51)

1. MUV-51 is an air operated flow control valve located in the same area as the block orifice. Its purpose is to allow additional letdown flow in excess of the 45 gpm that normally flows through the block orifice.

2. MUV-51 is operated from the Main Control Room using a control station located on the PSA section of the Main Control Board. The control station has a loading knob that can be set to position the valve between 0 and 100%. Minimum allowable flow through the valve is 10 gpm; however, < 10 gpm is allowed for 5 minutes each time letdown is initiated.

   a) MUV-51 may also be operated from the Remote Shutdown Panel (if in service).

3. MUV-51 has an air failure protection scheme that will allow limited operation of the valve in the event of a loss of its instrument air supply.

   a) If the air pressure to the valve positioner decreases <32 psig or <28 psig to the E/P controller, the solenoid valve that admits air to the valve positioner will de-energize, locking the valve in place, to prevent a high letdown flow rate or a loss of letdown flow. Under these conditions, the air pressure signal to the valve operating diaphragm is locked in and will not change regardless of what happens to upstream air pressure.

   b) When the solenoid de-energizes, a Main Control Room annunciator alarm will actuate and the AIR FAIL RESET pushbutton next to the valve control station will backlight.

   c) While in the air failure mode, the position of the valve can be changed by pressing and holding the AIR FAIL RESET pushbutton. This allows remaining air pressure to be supplied to the valve. The operator can then attempt to position the valve from its control station.

      1) When the AIR FAIL RESET pushbutton is released, the system will revert to its air failure mode.

d) When air pressure is restored, the air failure system will automatically reset.

4. An orifice installed in the bypass line downstream of MUV-51 will restrict letdown flow in the event MUV-51 fails open.

5. Letdown flow indication is available on the PSA and RIP sections of the Main Control Board. Indication is also available on the Remote Shutdown Panel.

H. RADIATION MONITOR (RM-L1)

1. RM-L1 is a NaI crystal scintillation detector located in the area above the prefilter room. Its purpose is to detect the presence of fission products in the letdown that are indicative of fuel clad failure.

   a) Flow through RM-L1 is controlled at 15-20 gph by flow controller FC-101.

2. Prior to entering RM-L1, the letdown flows through a delay coil to allow approximately three minutes for the N-16 in the fluid to decay before the letdown enters the radiation monitor.

3. N-16 delay coil is a 250-foot section of piping located in the prefilter room.

I. PREFILTERS (MUFL-2A AND MUFL-2B)

1. The prefilters, which are replaceable cartridge-type filters, are located on the 119' elevation of the Auxiliary Building. Their purpose is to remove suspended solid particle contaminants to prevent their buildup on the demineralizer resin beds.

2. Filter differential pressure indication is available on the PSA section of the Main Control Board. A high filter differential pressure will actuate a Main Control Room annunciator.

   a) A high differential pressure indicates the filter should be isolated and changed. Filters may be changed prior to reaching the alarm setpoint if radiation levels become excessive (≈200 R/Hr).

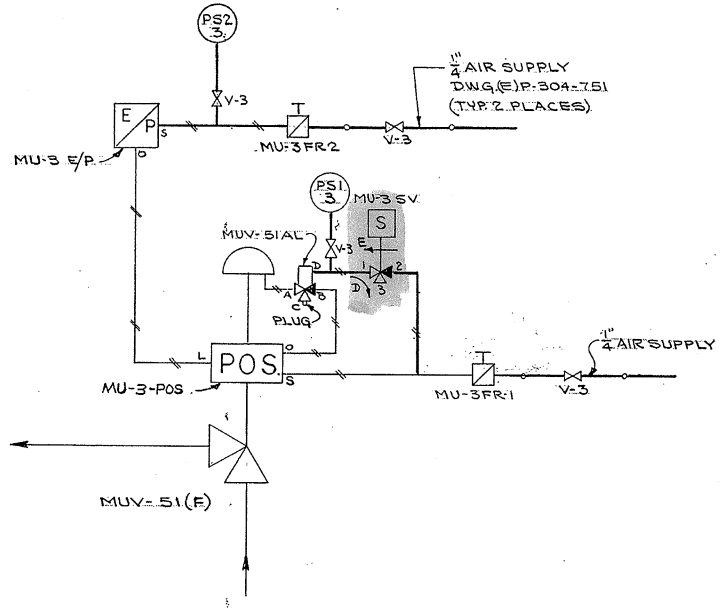

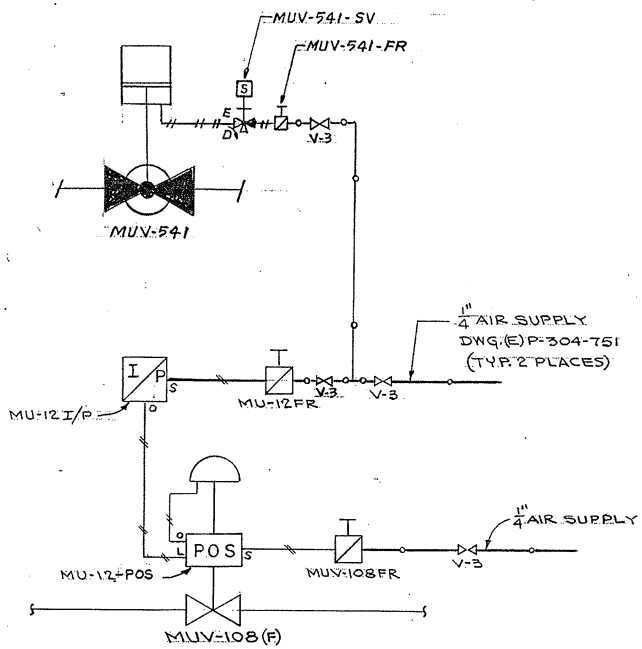

NOTE:
- 1 = ANSI N 18.2, 1975, SAFETY CLASS 1
- 2 = ANSI N 18.2, 1975, SAFETY CLASS 2
- 3 = ANSI N 18.2, 1975, SAFETY CLASS 3
- 4 = ANSI N 18.2, 1975, NON-NUCLEAR SAFETY

NOTES:

1. ALL MATERIAL PER TUBING.
   LINE SPECIFICATIONS : T-3(RO-2891).
2. ALL TUBING SEISMIC CLASS S-III.
3. ALL INSTRUMENTS, TUBING, AND INSTRUMENT VALVES, SAFETY CLASS 4. IMPULSE LINES EXCLUDED.

10-31-72	CONSTRUCTION	T.R.
	LIMITED CONSTRUCTION: AS NOTED	
	PRELIMINARY NOT FOR CONSTRUCTION	
	BIDDING PURPOSES ONLY	
DATE	RELEASED FOR	ENGR.

NO.	REVISIONS	BY	CK	APP	DATE
5	REVISED PER DCN 99-200	PRG	TDF	LJS	9/13/99
4	AS BUILT PER MAR 97-02-07-03	DK	AM	SS	9-12-97
3	REVISED PER DCN 88-115B	GK	TH	PHR	5/31/89
2	REVISED PER MAR 78-11-05	DCK	MP	GK	2-12-79
1	REVISED NOTES	LKA	DM	JBH	2-15-74
0	RELEASED FOR CONSTRUCTION	RD.	AB	TR	10-31-72

FLORIDA POWER CORPORATION

ST. PETERSBURG, FLORIDA

CRYSTAL RIVER PLANT

UNIT NO. 3 — 855,000 KW

AUXILIARY BLDG. — M.U. SYS. PNEUMATIC DIAGRAM
MAKEUP & PURIFICATION SYSTEM
VALVES
AIR SUPPLY

READING, PENNA. — GILBERT ASSOCIATES, INC. ENGINEERS AND CONSULTANTS

DRAFTING			ENGINEER APPROVAL	
MADE	CHECKED	APP		
RD.	A.J.B. 10-30-72	AJS	T.C. Reitz 10-31-72	E.R. Hartenstein 11-1-72

APPROVED
FOR CONSTRUCTION BY
FLORIDA POWER CORPORATION
NUCLEAR CONSTRUCTION MANAGER

SCALE	WORK ORDER	SIZE	DRAWING	REV.	FPC DRAWING NUMBER
NONE	4203	B-308-827		5	IC-308-827

DIETZGEN 129 10634

C-10-8

37. 056AK3.02 001/1/1/RO#37/MEM 4.4/4.7/BANK/R/CR03701/ROT-5-091-035
EOP-14, Enclosure 14 (Main Generator Purging) directs the SPO to purge the Main Generator with nitrogen. Why does this procedure direct the use of nitrogen instead of the normal source (carbon dioxide)?

A. The Main Generator can be purged faster using nitrogen. This allows the purge to be completed before depletion of the Non-1E battery.

B. The nitrogen tanks are further from the Main Generator than the carbon dioxide tank. This prevents ice migration from the nitrogen tanks to the Main Generator.

C. The power supply to the carbon dioxide Hex Vaporizer will not be available during a LOOP. The nitrogen tank Vaporizer can be supplied by EGDG-1C.

D.✓ The power supply to the carbon dioxide Hex Vaporizer will not be available during a LOOP. The nitrogen tank Vaporizer requires no power.

Reasons:

A. Plausible since the pressure reducer for CO2 regulates at 35 psig while the N2 header is maintained at 100 psig. Also, preventing the depletion of the Non-1E battery is the primary reason for performing this enclosure. However, the rate of purge is not the reason for the step.

B. Plausible since the N2 tanks are further away than the CO2 tank. Also, the vaporizers are needed to prevent ice migration to the Main Generator. However, distance from the Main Generator is not a factor.

C. Plausible since the CO2 hex vaporizer will not be available during a LOOP. Incorrect because the nitrogen vaporizer requires no power.

D. Correct. During a LOOP, the CO2 hex vaporizer will be unavailable. The N2 system vaporizer uses heat transfer to atmosphere, so it will be available following a LOOP. To prevent ice intrusion in the main generator, the N2 system is used during LOOP conditions to perform the generator purge.

OPS 5-116, Obj. 2; OPS 5-91, Obj. 1; OPS 4-82, Obj. 9; OPS ; EOP-TBD cross-step document for EOP-14 Step 14.4

RO - Bank

Reference(s) provided: None

EOP STEP	ELEMENT	TBD STEP	ELEMENT	DEVIATION TYPE
14 . 3	ACTION			Add

GENERIC JUSTIFICATIONS: GD-29, GD-32

JUSTIFICATION: The TBD does not address various plant equipment concerns that may exist during a LOOP condition. This enclosure is performed to ensure that Hydrogen is vented and purged from the main generator such that combustible mixtures do not exist. Combustible mixtures may evolve during a loop condition if the Non-1E battery is depleted such that operation of main generator seal oil is lost allowing Hydrogen to escape. This may occur since the Non-1E chargers cannot be powered from the ES buses due to transformer and EDG loading concerns. Since the Non-1E battery will eventually become incapable of powering the Hydrogen seal oil pump, actions of this enclosure remove the fire and explosion concern by venting and purging the main generator.

BASIS: This step is performed by the operator in the field (SPO) because there are no controls for the Air Side Seal Oil Backup Pump (TBP-10) in the Control Room. Shutdown of this DC powered pump will conserve battery capacity. The sequential details of this step have the SPO open the control power switch first which ensures that motor power is not secured under load. Opening the control power first (which is not under significant load), results in de-energizing the motor by "dropping out" the motor starter relay. Performing this action first allows opening the motor power switch under a "no load" condition.

REFERENCES: EEE-99-009
B-208-057 TB-13
NOCS 100114

---

14 . 4	ACTION			Add

GENERIC JUSTIFICATIONS: GD-29, GD-32

JUSTIFICATION: The TBD does not address various plant equipment concerns that may exist during a LOOP condition. This enclosure is performed to ensure that Hydrogen is vented and purged from the main generator such that combustible mixtures do not exist. Combustible mixtures may evolve during a loop condition if the Non-1E battery is depleted such that operation of main generator seal oil is lost allowing Hydrogen to escape. This may occur since the Non-1E chargers cannot be powered from the ES buses due to transformer and EDG loading concerns. Since the Non-1E battery will eventually become incapable of powering the Hydrogen seal oil pump, actions of this enclosure remove the fire and explosion concern by venting and purging the main generator.

BASIS: This step, initiates nitrogen flow from the liquid nitrogen storage tanks to the generator and records two parameters essential for determining purge termination in a later step. This step ensures the nitrogen storage tanks are not isolated by ensuring the tank outlet valves are open. The two nitrogen tanks and their associated vaporizers must be in service to satisfy the analyzed number of generator gas volume exchanges needed to ensure sufficient purging is accomplished. The next sequentially performed detail is to record the inventory volume in each tank. This initial pre-purge total volume must be known (recorded) because, once the purge is established, a specified reduction in nitrogen inventory represents a purge termination point. The next sequentially performed detail establishes purge flow by opening the two in-series cross-tie valves (NGV-325 and NGV-326). These valves were installed to provide an isolatable piping connection between the Generator Gas System (GG) and the Nitrogen System (NG) specifically for this evolution. The valve positioning required to align the Generator Gas System (GG) for this flowpath was performed in a previous step. The final sequential detail in this step is to record the time the purge was started. This provides a documented reference for the second of the two purge termination criteria which is referenced in the next step.

During normal operation, the main generator is purged with carbon dioxide (CO_2). The Cardox Hex Vaporizer is used to prevent ice from getting to the main generator during purging. However, without AC power the Cardox Hex Vaporizer is not available. The nitrogen system vaporizers to not require power, thus, simplifying purging for the operators.

REFERENCES:

ENCLOSURE 14 MAIN GENERATOR PURGING (CONT'D)

ACTIONS	DETAILS
14.4 ___ Start N_2 purge of Main Generator.	1 Ensure both N_2 tank outlet valves are open (119 ft Berm at N_2 tanks): ___ NGV-260 "LP N2 TANK (NORTH) ISO" ___ NGV-261 "LP N2 TANK (SOUTH) ISO" 2 Record initial N_2 tank levels: NG-97-LI "NGT-2 LEVEL": _____ in (south tank) NG-98-LI "NGT-1 LEVEL": _____ in (north tank) 3 Open N_2 purge supply valves (119 ft TB west of Cardox tank): ___ NGV-325 "NG TO GG CROSS-TIE ROOT ISO" ___ NGV-326 "NG TO GG CROSS-TIE ISO" 4 Record purge start time: _____:_____

38. 057AA1.04 001/1/1/RO#38/C/A 3.5/3.6/NEW/R/CR03701/
With the plant operating at 100% power, an electrical transient occurs. The following indications are observed on the NNI and ICS Power Supply Monitors. What is the status of PZR level control valve MUV-31(assume no operator actions)? [WHITE INDICATES LIGHT IS ON]

NNI-X **NNI-Y** **ICS-POWER**

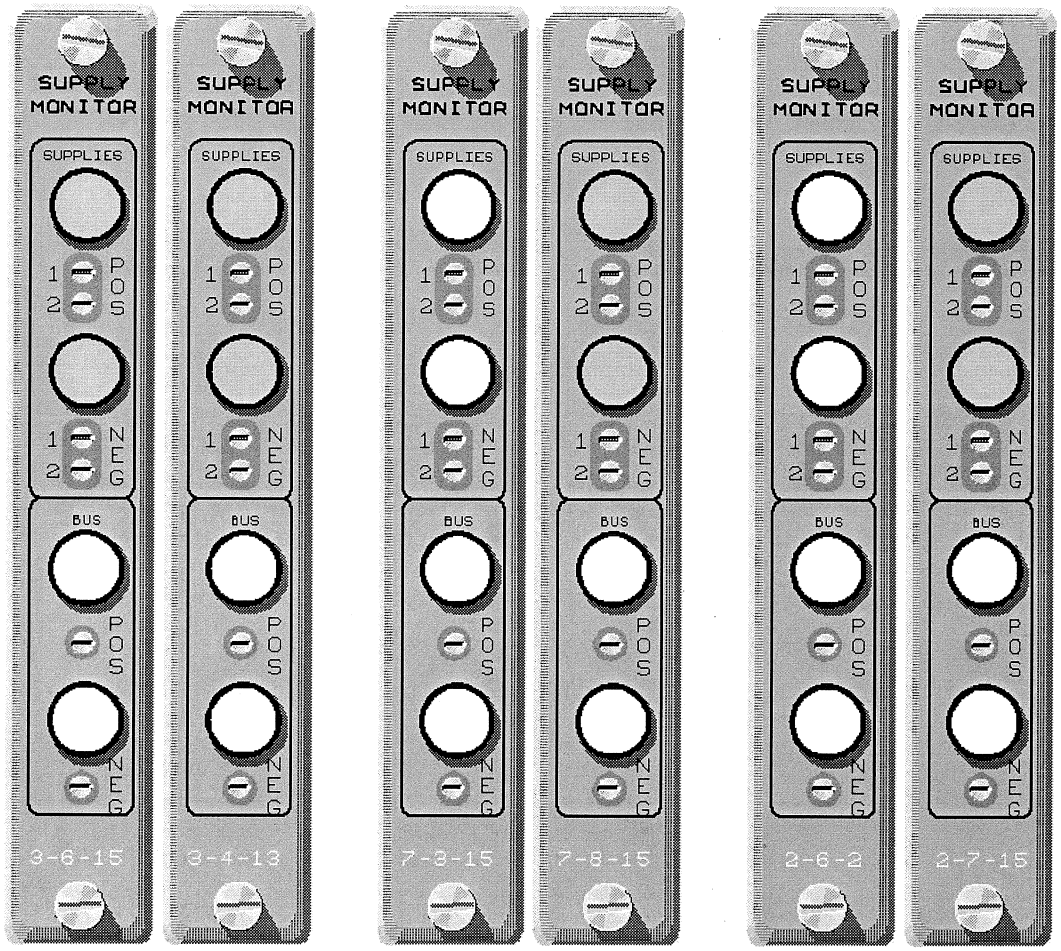

A. Failed closed

B. Failed as-is

C. Automatic control failed, but manual available.

D.✓ Both manual and automatic control available.

Reasons:

A. Plausible since this would be a normally expected failure mechanism for this type of valve.

B. Plausible since this would represent a possible failure mechanism (i.e. both manual and automatic control lost). Loss of Air - Fails as-is

C. Plausible since this would be the failure mechanism on a loss of NNI-X DC power.

D. Correct. This condition represents a failure of VBDP-1 (one of two power supplies to NNI-X. In this case, NNI-X would remain powered and MUV-31 would have both automatic and manual control available.

OPS 4-09, Obj. 3; OPS 4-52, Obj. 3, 7; OPS 4-09 Section 1-4.0.I.6; OPS 4-52 Section 1-4.0.X

RO - New

Reference(s) provided: None

d) The operations of these power supplies are the same as that described above for NNI-X.

e) Voltage and amp indications are provided for each of the four power supplies. A single indication is provided with a switch to swap between volts and amps. The normal position for these switches is selected to display amps. This allows the operator to verify that both power supplies for each bus is providing a portion of the load.

6. Power Supply Monitors

INST. NOTE: Objective 3

a) The power supply monitors, which are located in NNI cabinets 3 and 7, are used to alert the operator to a potential loss of either the positive or negative DC supplies and to prevent continued operation with a degraded voltage being supplied to the NNI cabinets.

b) The NNI-X and NNI-Y power supplies are each provided with a primary and a redundant monitor.

1) If the output of any of the four regulated DC supplies (inputs to the Current Sharing Circuit) falls below setpoint (±23.5 VDC), the primary power supply monitor will activate an annunciator alarm to alert the operator.

2) A failure of one supply will not affect the operation of the NNI system.

c) The primary monitor also evaluates the + and – 24VDC buses. If the voltage on either bus drops to ± 22VDC a bus low voltage alarm will annunciate on the events recorder.

d) The redundant monitor only evaluates the voltages on the + and – 24VDC buses. It will also actuate the events recorder bus low voltage alarm if the voltage on either bus drops to ± 22 VDC.

e) If both monitors sense an undervoltage condition (± 22VDC) on the + 24VDC or –24VDC bus, relays in the power supply monitors will close, activating the trip coils

W. COMMON MAKEUP AND SEAL INJECTION ISOLATION VALVE (MUV-596)

1. MUV-596 is a motor operated isolation valve located on the 95' elevation of the Auxiliary Building in the makeup pump valve alley.

2. During normal operation, MUV-596 is maintained in the open position to allow flow to the makeup and seal injection lines.

3. MUV-596 is powered from ES MCC 3A1

4. MUV-596 is normally using a three position (CLOSE, NORMAL, OPEN) spring return to NORMAL control switch located on the ESA section of the Main Control Board. This valve can also be operated using the breaker mounted open/close pushbuttons.

   a) MUV-596 receives a close signal on an RBIC actuation or an HPI Diverse isolation signal.

X. PRESSURIZER LEVEL CONTROL VALVE (MUV-31)

1. MUV-31 is an air operated control valve located on the 95' elevation of the Auxiliary Building in the makeup pump valve alley.

2. MUV-31 is used to control makeup flow to maintain the water level in the pressurizer at the operator-selected setpoint.

3. The valve may be operated in auto or manually from its Bailey HAND/AUTO (H/A) station on the ICS section of the Main Control Board. MUV-31 can also be operated using a Bailey station on the Remote Shutdown Panel (if in service)

   a) In the event of an NNI-X DC power is loss, MUV-31 can only be operated in the manual mode.

4. A 20-36-gpm minimum bypass flow (25 gpm preferred) is maintained around MUV-31 to ensure that there is always water flowing through the normal makeup nozzle to the RCS. This bypass flow prevents thermally shocking the welds and thermal sleeve at the penetration of the makeup line to the RCS piping. MUV-114-FIT provides local indication of bypass flow.

a) Bypass flow is maintained in this range due to industry operating experience showing that total MU flow rates maintained greater than 35 gpm provide improved thermal protection for the HPI/MU thermal sleeve by pushing the mixing area into the RCS flow stream. A previous concern with flows in excess of 36 gpm concurrent with a single failure of MUV-27, has been eliminated by the installation of MUV-596, an upstream isolation valve.

5. MUV-31 has an air failure protection scheme similar to that for MUV-51, with two major differences:

   a) The scheme will only actuate if positioner air pressure decreases to <32 psig.

   b) An air failure will cause the Bailey control station MUV-31 to go to MANUAL. When the air failure resets, the station will not automatically return to AUTO.

6. Makeup flow indications are available on the PSA and RIP sections of the Main Control Board and on the Remote Shutdown Panel.

Y. MAKEUP ISOLATION VALVE (MUV-27)

1. MUV-27 is a motor operated is located in the overhead of the 95' elevation of the Auxiliary Building near the HPI injection valves.

2. MUV-27 is normally operated from the Main Control Room using a three-position (CLOSE, NORMAL, OPEN) spring return to normal control switch located on the ES AB section of the Main Control Board.

   a) MUV-27 automatically closes to isolate the normal makeup flowpath on an RBIC actuation or an HPI Diverse isolation signal.

3. MUV-27 is powered from ES MCC 3B2.

Z. RCP SEAL INJECTION CONTROL VALVE (MUV-16)

1. MUV-16 is an air operated control valve located on the 95' elevation of the Auxiliary Building in the makeup pump valve alley.

39. 059A1.03 001/2/1/RO#39/C/A 2.7/2.9/NEW/R/CR03701/
The following plant conditions exist:

- Plant is at 80% power.
- FWV-2 (B Main Feedwater Booster Pump Suction Valve) open limit switch fails such that the valve no longer indicates full open.

Which ONE of the following represents the required actions for this failure?

A. Initiate a Work Request and maintain plant power at 80%.

B. Reduce power to < 75% and monitor the Main Feedwater Pumps for signs of cavitation.

C. ✔ Trip one Main Feedwater Pump and ensure the plant runs back to ≤ 52%.

D. Verify the B Main Feedwater Pump has automatically tripped and ensure the plant runs back to ≤ 52%.

Reasons:

A. While a work request would be a good action to take, it would not be acceptable to maintain power at 80%.

B. The limit & precaution mentions a concern for possible cavitation with only one booster pump with power between 60% and 75%. However, with a trip of a booster pump above 75% power one MFWP must be tripped. Also a power reduction to 52% power is required.

C. Correct. With the failure indicated the B MFW Booster Pump would trip. Per Limit and Precaution 3.2.1, if one booster pump trips while > 75% power one MFWP must be tripped. Also, with a loss of either MFWP or MFWBP a runback to 52% is expected.

D. There is no automatic trip of a MFWP on a loss of a MFW Booster Pump.

OPS 4-68, Obj. 1-3, 1-5, 1-7; OPS 4-68 Section 1-4.0.B.4; OP-0605 Step 3.2.1

RO - New

Reference(s) provided: None

3.2 Limits and Precautions

	LIMIT	BASIS
3.2.1	IF one FW Booster Pump trips AND Thermal power is > 75%, THEN trip one MFWP	Severe pump cavitation with one MFWBP at > 75% Thermal power. Some cavitation may occur when operating with one MFWBP between 60 and 75% power
3.2.2	DO NOT admit Gland steam to the Main Feedwater Pump Turbine rotor if standing idle without System Engineer concurrence	To prevent bowing of the shaft due to uneven heating
3.2.3	Long Cycle Cleanup shall be completed before feeding OTSGs	To prevent fouling of the OTSGs and obtain proper FW system chemistry
3.2.4	FW Booster Pumps are limited to two starts in succession from ambient temperature or one start from operating temperature. Run 30 min at full speed before additional starts	To prevent damage to the FW Booster Pump windings
3.2.5	Large swings in feedwater may occur when feedwater heaters are removed from or returned to service while at power	To prepare Operators for variations in feedwater
3.2.6	All drains in the FW train, or going to the FW train, which may have high solids during startup, should be recycled back to the condenser for filtering until the quality reaches normal FW specifications	To ensure that Chemistry requirements are met prior to feeding the OTSGs
3.2.7	During cycle cleanup at greater than 120°F, the condenser must be in service to protect demineralizers	To prevent heat damage to the demineralizer resin
3.2.8	FW Booster Pumps maximum bearing temperature rise is 104°F above ambient	To prevent damage to the FW Booster Pump bearings

B. FEEDWATER BOOSTER PUMP SUCTION VALVES (FWV-1 and –2)

1. The FW booster pump suction valves are motor-operated gate valves located on the 119' level of the Turbine Building beside FWHE-3A.

2. FWV-1 and FWV-2 are powered from 480 V Turbine MCC 3A And 480V Turbine MCC 3B, respectively.

3. The valves are normally operated using three-position (CLOSE, NORMAL, OPEN) spring return to NORMAL control switches located on the ICS section of the Main Control Board.

   a) The valves can also be operated from their MCCs using three push buttons (OPEN-CLOSE-STOP). The STOP button will stop the valve at current position.

4. Control/Interlocks

   a) Each valve supplies a start interlock for its associated FW booster pump. The pump will not start if its associated suction valve is closed. In addition, the pump will trip if its associated suction valve leaves its full open position.

C. FEEDWATER BOOSTER PUMPS (FWP-1A and -1B)

   a) FWP-1A and -1B, which are located on the southwest corner of the 95' elevation of the Turbine Building, are horizontal, double bearing centrifugal pumps rated at 12,760 gpm at 710' TDH at 305°F. Pump minimum flow is 3000 gpm.

   b) Sealing water for the pumps is supplied from the gland water system (GW).

   c) Normal full power suction pressure for the booster pumps is ≈60 psig, and normal discharge pressure is ≈300-350 psig (actual pressures are load dependant).

2. The 2500 HP air-cooled motors for FWP-1A and –1B are powered from 4160V Unit Bus 3A and 4160V Unit Bus 3B, respectively.

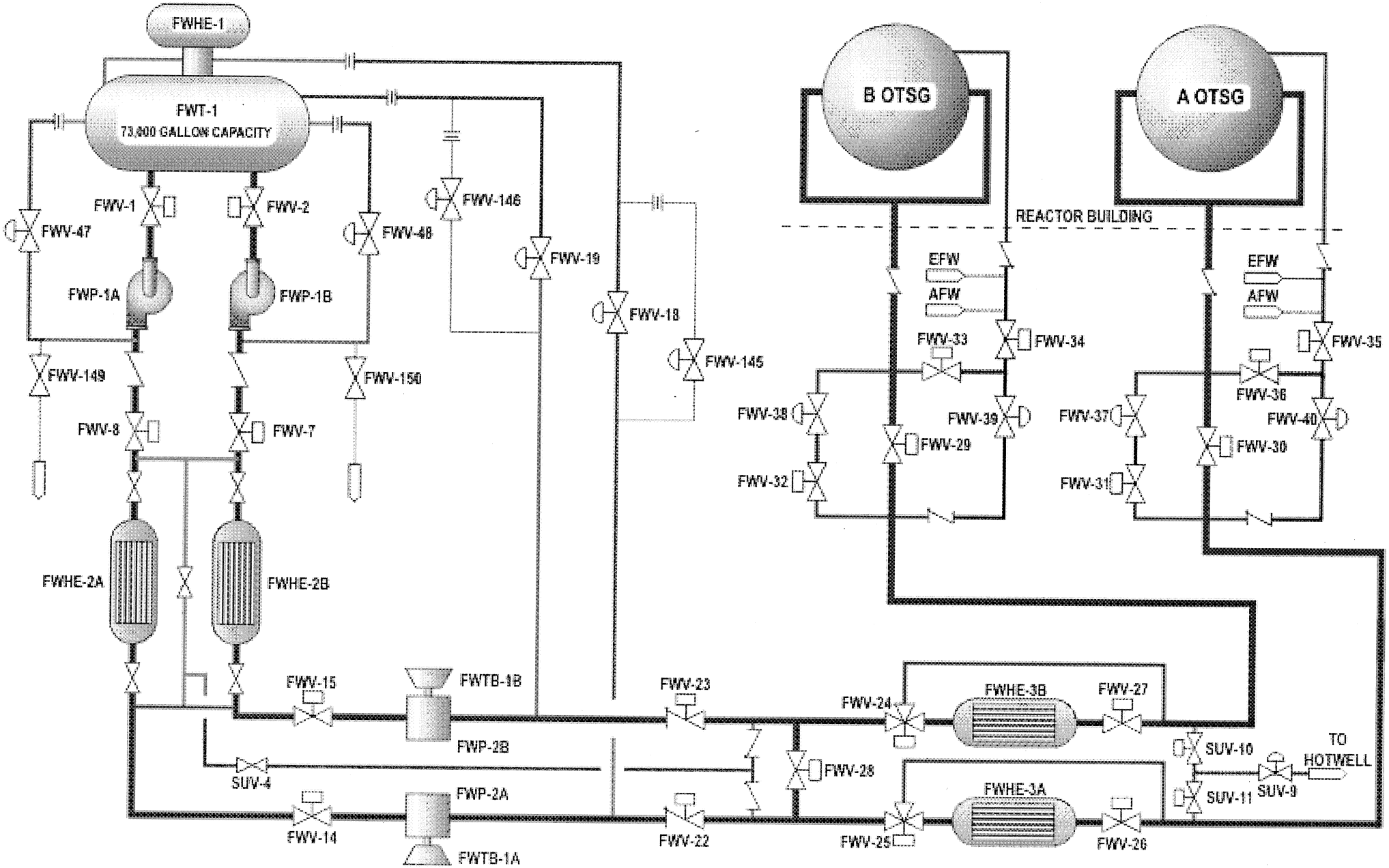

Figure 1 - Rev 2 Main Feedwater System

40. 059K4.19 001/2/1/RO#40/MEM 3.2/3.4/BANK/R/CR03701/ROT-4-068-016
Which ONE of the following lists of Main Feedwater valves receive a close command from a Main Feedwater Isolation signal?

A.	Both main block valves	FWV-29 & 30
	Both startup control valves	FWV-39 & 40
	Both low load control valves	FWV-37 & 38
	Both MFWP suction valves	FWV-14 & 15
	MFW cross connect valve	FWV-28
B.	Both main block valves	FWV-29 & 30
	Both startup block valves	FWV-33 & 36
	Both low load block valves	FWV-31 & 32
	Both MFWP discharge valves	FWV-22 & 23
	MFW cross connect valve	FWV-28
C.	Both emergency block valves	FWV-34 & 35
	Both startup block valves	FWV-33 & 36
	Both low load block valves	FWV-31 & 32
	Both MFWP suction valves	FWV-14 & 15
	MFW cross connect valve	FWV-28
D.	Both main block valves	FWV-29 & 30
	Both startup block valves	FWV-33 & 36
	Both low load block valves	FWV-31 & 32
	Both MFWP suction valves	FWV-14 & 15
	MFW cross connect valve	FWV-28

A. SUCV's and LLCV's (FWV-39, 40, 37, & 38) do not get a FWI signal.

B. MFWP discharge valves (FWV-22 & 23) do not get a FWI signal.

C. Emergency Block Valves FWV-34 & 35) do not get a FWI signal.

D. Correct. All the valves listed get FWI signal.

OPS 4-68, Obj. 1-4; OPS 4-68 Section 1-9.0.A.3

RO - Bank

Reference(s) provided: None

3. The low OTSG pressure signal (<600 psig), will cause a main feedwater isolation (MFWI) to occur by actuating the following components:

   a) Closing the main block valve(s).

   b) Closing the startup block valve(s).

   c) Closing the low load block valve(s).

   d) Closing the main feedwater pump suction valve(s).

   e) Closing the main feedwater cross connect valve (FWV-28).

   f) Tripping the main feedwater pump(s).

4. The main steam and feedwater isolation functions initiated by low OTSG pressures are bypassed during plant shutdown and cooldown using bypass pushbuttons on the PSA section of the Main Control Board.

   a) Outlet pressure in at least one OTSG must be below 725 psig before bypassing can be performed.

   b) In order to prevent an initiation from occurring, the system must be bypassed before OTSG pressure decreases to 600 psig.

   c) The bypass will be automatically reset when steam pressure in both OTSGs increases above 725 psig.

   d) Reset may also be accomplished using the manual reset toggle switches on each MSLI/MFWI trip module, located within the EFIC cabinets.

5. MFWI Key Lock Switches

   a) Two key lock switches ensure that main feedwater is isolated from a faulted OTSG should FWV-28 fail to close.

   b) The two switches, labeled EFIC CHANNEL "A" ("B"), MN FW ISOLATION, MN FW PUMP TRIP, are located

41. 061AA1.01 001/1/2/RO#41/MEM 3.6/3.6/BANK/R/CR03701/5-060-002
The plant is in a refueling outage with fuel movement in progress. The Fuel Handling Building (Spent Fuel floor) ventilation duct radiation monitor, RM-A4, goes in to high alarm. Assuming all automatic actions occur correctly and no manual actions are taken, which of the following would correctly describe the effect on the plant ventilation?

A. No effect. There are no automatic actions associated with RM-A4.

B.✔ The Fuel Handling Area supply fan, AHF-10 would trip.

C. The Auxiliary Building supply fans, AHF-11A and AHF-11B, would trip.

D. The running Auxiliary Building exhaust fans, either AHF-14A and AHF-14C OR AHF-14B and AHF-14D, would trip.

Reasons:

A. RM-A4 has an automatic action, AHF-10 will trip.

B. Correct, RM-A4 in high alarm will trip AHF-10.

C. Other radiation monitors, not RM-A4, trip AHF-11A and AHF-11B.

D. Auxiliary Building exhaust fans are not tripped by any radiation monitor, they also exhaust the Spent Fuel floor.

OPS 5-60, Obj. 8; OPS 4-25, Obj. 4; AP-250 Table 1; OPS 4-25 Section 1-4.0.F.5.e

RO - Bank

Reference(s) provided: None

Table 1:
RM Auto Actions

RM-A2 GAS		
Stopped:	___ AHF-11A	___ AHF-11B
	___ AHF-9A	___ AHF-9B
	___ AHF-30	___ AHF-10
RM-A3		
Stopped:	___ AHF-11A	___ AHF-11B
RM-A4		
Stopped:	___ AHF-10	
RM-A5 GAS/IODINE		
Closed:	___ AHD-17	___ AHD-2C
	___ AHD-22	___ AHD-2E
	___ AHD-12	___ AHD-1C
	___ AHD-12D	___ AHD-1E
Open:	___ AHD-3	
Stopped:	___ AHF-19A	___ AHF-19B
	___ AHF-17A	___ AHF-17B
Stopped, or slow speed.	___ AHF-20A	___ AHF-20B
IF AHF-20A and AHF-20B are stopped, THEN ensure stopped.	___ AHF-44A	___ AHF-44B
	___ AHF-30	

activity concentration is diluted by increasing ventilation system flow. Figure 2 in lesson plan OPS-4-86 (Auxiliary Building Ventilation) can be used to illustrate this concept.

INST. NOTE: Objective 4

d) RM-A3 interlocks (high radiation alarm)

1) Trips Trips AHF 11-A and 11B (Auxiliary Building supply fans)

2) Closes dampers D-29 and 36 (WGDT area supply and exhaust dampers)

e) RM-A4 interlocks (high radiation alarm)

1) Trips AHF-10 (Fuel handling area supply fan)

f) There are no interlocks associated with RM-A7 and RM-A8.

INST. NOTE: Objective 3

6. Group Three consists of RM-A5 (Control Room Ventilation Return Duct) and RM-A6 (Reactor Building Ventilation Duct).

a) RM-A5 is located on the 154' elevation of the Control Complex in the heating and ventilation area

b) RM-A6 is located on the 119' elevation of the Auxiliary Building at the penetration area

INST. NOTE: Figure 9 (Group 3 RMA Flow Diagram)

c) The Group Three monitors have a gas channel and either an iodine channel (RM-A5) or a particulate channel (RM-A6) (Figure 9).

1) The particulate/iodine monitor uses both a paper and a charcoal filter. The paper filter collects particulates and the charcoal filter, which is located downstream of the paper filter, collects iodine. Both filters are located in the same chamber, adjacent to the detector face.

42. 061K1.10 001/2/1/RO#42/MEM 2.6/2.7/NEW/R/CR03701/
Which ONE of the following describes the fuel supply for Diesel Driven EFW Pump EFP-3? During normal full load operation fuel is supplied via a pump that is driven by ___(1)___ and takes suction on the ___(2)___.

A. (1) a DC motor
(2) Fuel Oil Day Tank which is filled from the Fuel Oil Storage Tank

B. (1) the diesel engine
(2) Fuel Oil Day Tank which is filled from the Fuel Oil Storage Tank

C. (1) a DC motor
(2) Fuel Oil Storage Tank

D.✓ (1) the diesel engine
(2) Fuel Oil Storage Tank

Reasons:

A. EFP-3 fuel oil system is equipped with a DC motor driven fuel oil priming pump, but it is only needed during startup. EFP-3 is not equipped with a fuel oil day tank.

B. EFP-3 is not equipped with a fuel oil day tank.

C. EFP-3 fuel oil system is equipped with a DC motor driven fuel oil priming pump, but it is only needed during startup.

D. Correct. The diesel engine driven fuel pump would normally be supplying the fuel oil while EFP-3 is in service, and it takes suction from the Fuel Oil Storage Tank

OPS 4-37, Obj. 3; OPS 4-37 Section 1-4.0.K.13 & Figure 6

RO - New

Reference(s) provided: None

The coolant system also utilizes an immersion heater to maintain a minimum coolant temperature during cold weather. The heated coolant is used to heat the oil in the Lube Oil Cooler (now operating as a heater). The coolant is circulated by natural convection.

13. FUEL SYSTEM

Fuel is drawn out of the fuel storage tank through a duplex fuel strainer by either the engine driven fuel pump or the DC driven fuel pump. The fuel then passes through a duplex fuel filter to the engine supply manifold. From the supply manifold fuel flows to each of the fuel injectors. A small portion of the fuel that is supplied to the injector is injected into the cylinder by the injector pump under very high pressure. The amount injected depends on the position of the injector rack that is controlled by the governor. Excess fuel that is not injected serves to cool and lubricate the moving parts. The excess fuel is then returned back to the fuel storage tank.

The DC driven fuel pump is operational during engine startup. The DC fuel pump will also start on loss of fuel pressure from the engine driven fuel pump.

If the engine has been running at >400 rpm for longer than 60 seconds and the fuel discharge pressure drops to < 20 psig then the DC fuel pump will be commanded to start.

The manual operated fuel pump can be used to prime the fuel system if the engine has not been run for a long period of time. It can also be used to remove trapped air from the fuel strainers and filters after changing.

Note: Never use a zinc coated container of fitting with either the fuel oil or lube oil system. Zinc will damage the silver bearings used in the piston pins and in the turbo charger.

EFP-3, Diesel Driven Emergency Feedpump Fuel Oil System Simplified

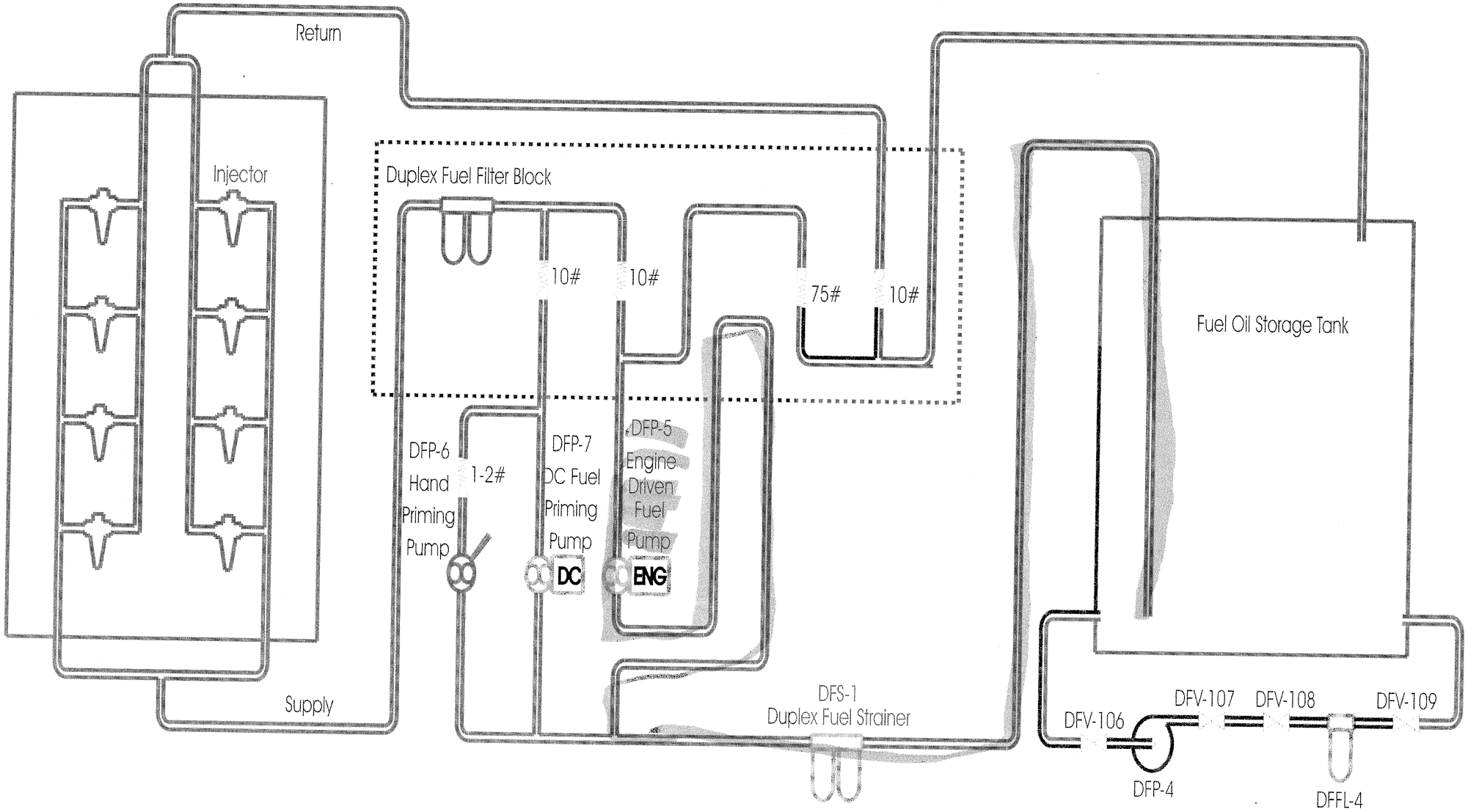

FIGURE 6 - EFP-3 Fuel Oil System

43. 062A2.12 001/2/1/RO#43/C/A 3.2/3.6/NEW/R/CR03701/
The following plant conditions exist:

- At time 0205 the "4160V ES BUS 3B OVRCUR LK/OT 86B-3206" relay actuated.
- The crew entered AP-770 "Emergency Diesel Generator Actuation".
- Enclosure 1 "Recovery of Faulted ES Bus" is in progress.
- Electrical Maintenance reports that the fault will be isolated and the bus ready for restoration by 0330.

Before Enclosure 1 is begun the B EDG will be ___(1)___ and when Enclosure 1 is completed the B EDG will be ___(2)___.

A. (1) running
(2) running

B.✔ (1) running
(2) shut down

C. (1) shut down
(2) running

D. (1) shut down
(2) shut down

Reasons:

A. Plausible if the student does not realize that the ES Diesel ventilation fans are powered from the ES MCC.

B. Correct. With this fault present the EDG would be running unloaded. Since the time for repairs will take > 1 hour, the EDG must be shutdown in step 1.2. At this point step 1.3 would be performed and step 1.4 would be N/A with step 1.5 being the end of the enclosure.

C. Plausible if the student mistakenly believes that this lockout would cause a diesel trip (can be caused by the 86DG lockout relay).

D. Plausible if the student mistakenly believes that this lockout would cause a diesel trip (can be caused by the 86DG lockout relay).

OPS 5-30, Obj. 7; OPS 4-06, Obj. 7; OPS 4-86, Obj. 3; OPS Section 1-4.0.M; OPS 4-86 Section 1-4.0.L; AP-770 Enclosure 1

RO - New

Reference(s) provided: AP-770 Enclosure 1

2) Only the digital display is high accuracy. The bar graph is for information only.

M. PROTECTIVE RELAYING

1. Protective relays prevent damage to the EGDG due to faults and prolonged overcurrent conditions.

   a) The relays are designed to prevent the EGDG from tripping during overcurrent excursions resulting from block loading, but will protect the EGDG from damage due to prolonged overload or short circuit conditions by tripping the respective EGDG lockout relay.

2. When the EGDG is being operated in parallel with the switchyard, power directional relays monitor the EGDG output and will trip the 4160V ES bus feeder breakers from the switchyard if EGDG load increases to >3500KW.

   a) The relays are only armed for operation when the diesel is being operated in parallel with one of the other sources available to the ES bus.

3. Lockout relays 86B/B1 prevent an EGDG output breaker from closing onto a faulted bus.

   a) The 86B relays provide protection when the EGDG is being operated from the Main Control Room. The 86B1 relays provide protection when control is transferred to the remote shutdown panel.

4. Actuation of the generator neutral ground relay (64DG) will also trip the lockout relays, preventing an EGDG from reclosing onto a ground fault.

5. Should the current on two of the three output phases of the generator differ from each other by a specified amount the 87 relay (Generator Differential Current) will actuate. Actuation of the 87 relay will actuate the 86DG lockout which will energize Governor Stop Solenoid which places the fuel rack to the NO fuel position and the EDG will stop.

5. Start Permissives/Trip Signals:

   a) Only one of the fans can be run at a time.

      1) The running fan must be stopped to start the alternate fan.

6. The air flow across the spent fuel pool provided by these fans captures gases released by the spent fuel and transports the gases to the auxiliary building exhaust system. This ensures that any fission gases released are discharged through the filtered exhaust system instead of being released into the fuel handling building atmosphere.

L. DIESEL GENERATOR ROOM SUPPLY FANS (AHF-22A, -22B, -22C, AND -22D)

1. Each diesel is equipped with two air handling fans used to supply air to the diesel engine compartment.

   a) AHF-22A and –22B supply the "A" EDG. AHF-22C and –22D supply the "B" EDG

   b) Anytime either diesel is operating both of its respective air handling fans must start and remain running.

2. The fans, which are located in their associated diesel rooms on the 119' elevation of the Auxiliary Building are rated at >45,000 cfm per fan pair.

   a) This capacity provides adequate room cooling for all credible operating conditions.

3. The 15 HP motors for the fans are powered from the following sources:

   a) AHF-22A - ES MCC 3A2
   b) AHF-22B - ES MCC 3A2
   c) AHF-22C - ES MCC 3B1
   d) AHF-22D - ES MCC 3B1

4. The fans are normally operated using five position (STOP, NORMAL-AFTER-STOP, START, NORMAL-AFTER-START,

4.0 ENCLOSURE 1 RECOVERY OF FAULTED ES BUS

ACTIONS	DETAILS
1.1 ___ Notify Maintenance to repair fault on affected bus.	

CAUTION

Diesel operation for ≥ 1 hour without ventilation may result in Diesel failure.

1.2 ___ IF at any time, ES Diesel has been running ≥ 1 hour AND ES Diesel ventilation is NOT available, THEN ensure affected ES Diesel is shut down.	• Notify PPO to shut down affected ES Diesel: 1 ___ Depress "EMERGENCY STOP" push button (119 ft AB A(B) ES Diesel Control Room). 2 ___ Trip ES Diesel fuel rack (119 ft AB A(B) ES Diesel Engine Room).

1.3 ___ WHEN fault is repaired, THEN reset lockouts for affected bus.

A ES Bus	B ES Bus
___ 86B-3205	___ 86B-3206
___ 86B-3207	___ 86B-3208
___ 86B-3211	___ 86B-3212

BLANK PAGE

ACTIONS	DETAILS
1.4 ___ IF affected ES 4160V bus is de-energized, AND ES Diesel is running, THEN reset affected ES Diesel lockout.	1 ___ Dispatch PPO to affected ES 4160V ES bus SWGR Room. 2 Place and maintain affected ES Diesel output Bkr control switch in the "TRIP" position: ___ Bkr 3209 ___ Bkr 3210 3 Notify PPO to reset affected ES Diesel lockout: ___ "86B-3209 A EDG LOCKOUT RELAY" (A ES 4160V SWGR Room) ___ "86B-3210 B EDG LOCKOUT RELAY" (B ES 4160V SWGR Room) 4 ___ WHEN affected ES Diesel lockout is reset, THEN close affected ES Diesel output Bkr: ___ Bkr 3209 ___ Bkr 3210

1.5 ___ **EXIT** this enclosure.

BLANK PAGE

3.2 Limits and Precautions

	ACTION	DETAILS
3.2.5	Any time a start failure or automatic shutdown occurs, the local alarms must be logged and recorded on the Work Request. Do NOT reset any alarms until problem resolved	Ensure conditions are the same for troubleshooting
3.2.6	EDG operation at zero load should be limited to less than 2 hours. Reduced load operation (< 1400 kw) should be minimized	Prevent accumulation of unburned fuel and lube oil in the exhaust manifold
3.2.7	Operation of EDG loaded should be minimized in inclement weather conditions (e.g. lightning) (SOER 99-1) [NOCS 100336]	The EDG can be affected by off-site load disturbances when synchronized with the grid
3.2.8	Personnel should be verified clear of switchgear rooms during breaker operations	Personnel Safety
3.2.9	Any time EDG is started or run per this procedure, Enclosure 8, Emergency Diesel Generator Operating Log, must be completed	Allow NPSE to maintain trend
3.2.10	Feeder sources to the ES 4160V A Bus OR ES 4160V B Bus should NOT be changed while its associated ES EDG is paralleled to the bus	Due to possible large changes in MVAR loading
3.2.11	Plant 6900V or 4160V buses should NOT be transferred to or from a transformer operating in parallel with an EDG	Voltage variations due to transformer loading or unloading may cause excessive EDG reactive loading
3.2.12	IF emergency need for EDG is required while operating per this procedure, THEN the "High Crankcase Pressure Trip Enable" switch must immediately be returned to the "Normal" position	To prevent an inadvertent shutdown of EDG during emergency conditions

44. 062AA2.04 001/1/1/RO#44/C/A 2.5/2.9/BANK/R/CR03701/5-061-002
The following plant conditions exist:

- o SW-RW flow is significantly reduced due to heat exchanger blockage
- o SWP-1C is in service
- o RCP SW return temperatures:
  RCP-1A - 163°F
  RCP-1B - 170°F
  RCP-1C - 181°F
  RCP-1D - 168°F
- o CRDM stator temperatures:
  ROD 2-1 160°F
  ROD 2-3 165°F
  ROD 3-4 162°F
  ROD 3-5 173°F
  ROD 4-3 182°F
  ROD 4-7 175°F
  ROD 5-2 167°F
  ROD 6-2 153°F
  ROD 6-5 181°F
  ROD 7-4 177°F

Which ONE of the following describes the action that should be taken?

A. Reduce power and shut down RCP-1C.

B. Reduce power and de-energize ROD 4-3.

C.✔ Trip the reactor.

D. Start SWP-1A and trip SWP-1C.

Reasons:

A. Plausible since RCP-1C should be secured per OP-302. However, with more than 1 CRD > 180°F, a reactor trip is required, not a power reduction.

B. More than 1 CRD has a high motor temperature which would require a reactor trip.

C. Correct. Per AP-330 the reactor must be tripped with more than one CRD with temperature > 180°F.

D. Plausible since SWP-1A would provide more cooling flow than SWP-1C. However, with SW-RW degraded the SW system lacks an adequate heat sink. Raising SW flow would have no real impact on heat removal from the SW system.

OPS 5-61, Obj. 5; OP-502 Step 4.15.5 / AP-330 Step 3.3

RO - Bank

Reference(s) provided: None

3.0 FOLLOW-UP ACTIONS (CONT'D)

ACTIONS	DETAILS
NOTE **CRD stator computer points X211 through X279 alarm at ≥ 160°F.**	
3.3 ___ IF at any time, multiple CRD stator TEMPs are ≥ 180°F, THEN trip the Rx.	• ___ IF in Modes 1 through 4, THEN **CONCURRENTLY PERFORM** EOP-2, Vital System Status Verification, beginning with Step 2.1 • ___ IF in Mode 5, THEN perform the following in order: ___ Depress Rx trip push button. ___ Ensure CRD groups 1 through 7 are fully inserted.
3.4 ___ IF CRD stator TEMPs are the only TEMPs high AND rising, THEN **GO TO** Step 3.19 in this procedure.	
3.5 ___ IF SW system leak exists, THEN **GO TO** Step 3.25 in this procedure.	

3.2 Limits And Precautions

	LIMIT	BASIS
3.2.1	Maximum allowable temperature of cooling water entering the CRDs is 120°F	Ensures that the CRD will NOT over heat during normal operations
3.2.2	A minimum lubricating flow of 1 gpm Demineralized Water into the top of the APSR motor tube must be provided at least 5 min prior to and during the operation of APSR for coupling or decoupling	This is the minimum water flow required to lubricate the lead screw and roller nuts during coupling and decoupling
3.2.3	Maximum Continuous Travel is 420 in/hr.	Prevents excessive heat generation and rising temperature which could cause the mechanism to over heat
3.2.4	Maximum CRD running time is 30 min/hr.	Prevents excessive heat generation and rising temperature which could cause the mechanism to over heat
3.2.5	Maximum current to each coil of a drive is 17 amps	Prevents excessive heat generation and insulation break down
3.2.6	Maximum Stator temperature is 180°F with CRD energized	Temperature limits which protect the CRDM components from break down or distortion
3.2.7	Minimum RCS PRESS for tripping CRDs must be ≥ 500 psig except if required for core protection. APSRs may be operated below 350 psig for coupling and uncoupling	Prevents gasses from coming out of solution which could damage CRDM components
3.2.8	Groups 5, 6, and 7 overlap shall be 20 - 30% [NOCS 001778]	Provides a uniform rate of reactivity addition over their entire length of travel

4.15 High Control Rod Stator Temperature (Reference)

ACTION	DETAILS

NOTE

If it is desired NOT to allow the affected rod to drop, the CRDM may be de-energized per Section 4.10.

4.15.4	IF any one CRD stator reaches 180°F, THEN NOTIFY SSO/CRS to determine if rod should be tripped	• IF rod is to be tripped, THEN PERFORM the following: 1. __ IF time allows, THEN REDUCE Rx power to ≤ 60% FP 2. __ OPEN individual feeder breaker for affected CRDM (REFER TO Enclosure 3) 3. __ PERFORM AP-545, Plant Runback, if appropriate ____/____ Initial/Date
4.15.5	IF two or more CRDM stator temps reach 180°F, THEN trip Rx, AND GO TO EOP-02	____/____ Initial/Date

END OF SECTION

4.7.4 Abnormal Nuclear Services Cooling (SW) Flow

ACTION	DETAILS

NOTE

The "RCP CLG WTR FLOW LOW" alarm will actuate if SW flow to any RCP is < 260 gpm.

4.7.4.1	IF "RCP CLG WTR FLOW LOW" annunciator alarms, THEN MONITOR system parameters	1. __ VERIFY normal SW system operation 2. MONITOR RCP seal conditions __ RCP seal leakage __ second stage cavity pressure __ third stage cavity pressure __ upper seal outlet temperature 3. __ Seal injection flow / Initial/Date
4.7.4.2	IF a Loss of Nuclear Services Cooling has occurred to more than one RCP, THEN EXIT this section AND GO TO AP-330, Loss of Nuclear Services Cooling	/ Initial/Date

NOTE

SW temperature leaving the RCPs is monitored by gauges located in the overhead 119' AB, RM-A6 penetration area.

4.7.4.3	IF SW has been lost to a RCP OR IF cooling water temperature leaving affected RCP is approaching 180 °F, THEN REDUCE power to ≤ 72% per AP-510, Rapid power Reduction and Trip Affected RCP	1. __ MONITOR SW temperature leaving affected RCP 2. __ REDUCE power to ≤ 72% per AP-510, Rapid Power Reduction 3. __ STOP Affected RCP 4. __ GO TO AP-545, Plant Runback / Initial/Date
4.7.4.4	RESTORE SW cooling to RCP per Section 4.9.2	/ Initial/Date

END OF SECTION

45. 063K3.01 001/2/1/RO#45/C/A 3.7/4.1/BANK/R/CR03701/4-006-019
What effect will the loss of DPDP-5A have on the "A" Emergency Diesel Generator, EGDG-1A?

EGDG-1A will:

A.✓ immediately start and go to 900 rpm with no indication of voltage.

B. immediately start and go to 900 rpm with proper voltage and frequency.

C. remain in a standby condition. If an undervoltage condition occurs EGDG-1A will start and energize the bus.

D. remain in a standby condition. If an undervoltage condition occurs EGDG-1A will start, but will *not* energize the bus.

Reasons:

A. Correct. Loss of DPDP-6A, breaker 12 will start diesel.

B. The diesel will start but will have no DC power to flash the field.

C. Generator differential current relays are not functional with the loss of DPDP-6A, breaker 14.

D. Undervoltage relays are defeated with the loss of DPDP-5A, breaker 10.

OPS 4-06, Obj. 1-4 & 1-7; OPS 4-06 Section 1-4.0.L.3.; OP-700E

RO - Bank

Reference(s) provided: None

TITLE	125/250 V.D.C. E.S. DIESEL GENERATOR DC PANEL 'A'	**DPDP-6A**
LOCATION	119' AUX BLDG IN 'A' EGDG CONTROL ROOM	
FEEDER	DPDP-5A SWITCH 12	PANEL DRAWING 201-071 DP-9A

BKR. NO.	LOAD COMPONENT IDENTIFICATION		NOR. POS. (√)	
1	DFP-3A	125V CONTROL POWER FOR DC FUEL OIL AUXILIARY PUMP 3A	ON	
2	SPARE		ON	
3	EGM-2A	125V CONTROL POWER	ON	
4	DIESEL DAY TANK RELAYS	LOSS OF DC POWER WILL PREVENT AUTO START OF FUEL OIL TRANSFER PUMPS	ON	
5	SPARE		ON	
6	DFP-1C	125V CONTROL POWER FOR DC FUEL OIL TRANSFER PUMPS	ON	
7	DFP-1C	250V MOTOR POWER	ON	
8	DFP-3A	250V MOTOR POWER	ON	
9	EGM-2A	250V MOTOR POWER	OFF	
10	EGCP-1A	125V CONTROL FOR ANNUNCIATOR PANEL	ON	
11	SPARE		ON	

TITLE	125/250 V.D.C. E.S. DIESEL GENERATOR DC PANEL 'A'		**DPDP-6A**
LOCATION	119' AUX BLDG IN 'A' EGDG CONTROL ROOM		
FEEDER	DPDP-5A SWITCH 12	PANEL DRAWING 201-071 DP-9A	

BKR. NO.	LOAD COMPONENT IDENTIFICATION		NOR. POS. (√)	
	CAUTION: BREAKERS 12 AND 14 ARE ELECTRICALLY CROSSTIED. BOTH BREAKERS MUST BE PLACED IN OFF TO GUARANTEE ELECTRICAL ISOLATION AND PERSONNEL SAFETY.			
	CAUTION: OPENING BREAKER 12 WILL START DIESEL.			
12	EGDG-1A CONTROL POWER	LOSS OF DC POWER WILL START DIESEL DISABLE ALARMS AND DEFEAT THE SHUT DOWN RELAY FOR EGDG-1A	ON	
13	SPARE		ON	
	CAUTION: BREAKERS 12 AND 14 ARE ELECTRICALLY CROSSTIED. BOTH BREAKERS MUST BE PLACED IN OFF TO GUARANTEE ELECTRICAL ISOLATION AND PERSONNEL SAFETY.			
14	EGDG-1A DIFFERENTIAL LOCKOUT AND AUX RELAYS	LOSS OF DC POWER WILL DEFEAT DIFFERENTIAL CURRENT, PHASE TO PHASE FREQUENCY, AND PHASE TO PHASE VOLTAGE RELAYS	ON	

* Caution is replicated in the field. If Caution changes, the field label must change.

_____ /
Initial/Date

when the EDG is run at slow speed. Because of the concerns with overheating and damage to the clutch assembly operation of the EDG at slow speed (500 rpm) is limited not to exceed 5 minutes.

L. DIESEL GENERATOR

1. Each EGDG supplies electrical power to its associated ES buses using a three phase, 4160VAC,fixed 8-pole stator type generator.

2. A rotating DC powered field provides magnetomotive excitation of the generator stator windings, resulting in an AC output.

3. When the EGDG is running, the generator is self-exciting. A portion of the generator output is stepped down and rectified for use as the power supply to the rotating DC field.

   a) With the EGDG at zero/low speed, an external power source is required to supply the field current needed to initiate generator output. This field flash current is provided by the safety related (1E) station batteries.

4. Generator voltage regulation is accomplished by varying the DC current applied to the field. Changes in current result in corresponding changes in field strength, generator stator excitation, and generator output voltage.

5. Generator Field Flash Control (Figure 17)

   a) With the EGDG in ES standby status, the following sequence will take place on receipt of a EGDG start signal:

      1) With the START MODE SELECT switch in AUTO, power will be supplied to the K-1 (Field Short) relay when engine speed reaches 250 rpm.

         - With the START MODE SELECT switch in MANUAL, power will not be supplied to the K-1 relay until engine speed reaches 810 rpm or jacket coolant pressure (indicative of engine speed) reaches 14 psig.

46. 064A2.02 001/2/1/RO#46/C/A 2.7/2.9/NEW/R/CR03701/

EGDG-1B is being operated in parallel with the grid per SP-354B with a load of 2700 KW and 1.2 MVAR out. A grid disturbance occurs that causes grid voltage to lower slightly. This disturbance would cause generator ___(1)___ to rise and the operator would need to adjust generator ___(2)___ to maintain desired loading.

A. (1) KW
(2) voltage

B. (1) KW
(2) frequency

C.✓ (1) VARs
(2) voltage

D. (1) VARs
(2) frequency

Reasons:

A. The impact on KW loading of the generator would be minimal since grid voltage changed, not frequency.

B. The impact on KW loading of the generator would be minimal since grid voltage changed, not frequency. However, if KW had been affected, generator frequency would have been the appropriate parameter to adjust.

C. Correct. A lowering of grid voltage would cause a rise in VAR loading (more VARs out). This could challenge the 1.5 MVAR out limit. Adjusting generator voltage (down) would reduce MVAR loading.

D. Adjusting frequency would change real (KW) loading, not reactive loading.

OPS 4-06, Obj. 1-4 & 1-7; OPS 2-16, Obj. 44; OPS 4-06 Section 1-4.0.L.6.; OPS 2-16 1-7.0.O.2; SP-354B

RO - New

Reference(s) provided: None

11. In summary, stable operation of paralleled AC generators depends on maintaining the power angle between the generator and its load at less than 90 degrees. This power angle depends upon:

    a) the amount of power output (power angle increases as power output increases).

    b) the field strength of the generator rotor.

    c) the transmission voltage on the system.

    d) the electrical distance between the generator and the load.

O. OPERATOR CONTROL OF REACTIVE POWER

1. With an electrical system carrying inductive or capacitive load, the system power factor is lower than unity (1.0). For most electrical systems the loads are mainly inductive and the power factor is a lagging one. The power factor can be improved by switching in capacitors or synchronous motors. If the system power factor is not improved the generators carrying the load will have to share the reactive load.

2. Assume a multiple generator system where your generator is operating with a power factor of 1.0 (i.e., true power = apparent power) and the other generators are carrying all the reactive load (megavars) and their power factors are less than 1.0. You receive an order to pick up 200 megavars lagging (megavars out).

    a) In order to pick up a reactive load the generator power factor must be adjusted. The power factor for a generator may be adjusted by altering the field current. For over-excited (or lagging power factor) operation, increasing the field current, which in turn increases the generator voltage, will lower the generator power factor and pick up a portion of the system inductive load. When the generator is carrying inductive (lagging) load, decreasing the field current, thereby lowering the generator voltage, will shed inductive load and improve the generator power factor as it moves toward unity.

    b) If more reactive power is picked up by the generator that exists on the system, the excess current will be circulated

6. Generator Voltage Regulation (Figure 18)

a) Voltage regulation for each EGDG is provided by a solid state (static) exciter-regulator located in its associated EGDG Generator Control Cabinet.

b) With the VOLTAGE ADJUST MODE SELECT switch in AUTO, voltage regulation is accomplished by comparing the generator output to a reference (setpoint).

1) Any difference between the actual output and setpoint results in an error signal being developed.

2) The error signal, which is supplied to the control windings of three saturable reactor transformers, is used to adjust the output of the transformers by varying the coupling between the transformer primary and secondary windings.

3) The outputs of the saturable reactor transformers are vectorially summed with the outputs of three current transformers, rectified and used to supply the generator field windings.

- The current transformers (power type) are connected in series with the generator output. Their output is directly proportional to generator load.

INST. NOTE: Excitation requirements vary directly with load, i.e., increasing load requires increasing excitation, and vice versa. Using the output of the CTs to supply a portion of the excitation current results in a natural "coarse" voltage adjustment with changing load (As generator load increases, the output of the CTs (excitation current) increases). The saturable reactor output represents a "fine" adjustment based on the voltage error.

4) When the generator is being operated in AUTO in parallel with another source, the UNIT/PARALLEL switch inside the Generator Control Panel is placed in PARALLEL. This will allow the EGDG to share reactive load (Kilovars or Megavars) with the other source, and prevent the voltage regulator from over

4.5 EDG Loading

4.5.1 Slowly ADJUST governor "SPEED DROOP" to position "60" (located on EGDG-1B engine governor). [ ]

4.5.2 SELECT "UNIT-PARALLEL" switch in "PARALLEL " position (located in EGDG-1B Control Panel). [ ]

NOTE

In order to satisfy ITS SR 3.8.1.3 (one hour loaded run), this section must be preceded by and immediately follow, without shutdown, a successful EDG start (slow or fast).

4.5.3 TRANSFER voltage control to Control Room by Selecting "EDG B EXC VOLT ADJ SELECT" switch to "CONT RM" position (located on MCB). [ ]

4.5.4 VERIFY "DIESEL GEN B VOLTAGE ADJ IN CONTROL RM" annunciates on MCB. [ ]

4.5.5 PLACE synchroscope in service for EDG Output Breaker 3210 (located on MCB). [ ]

NOTE

Breaker 3210 will not close if the synchroscope is moving > 1/2 revolution per minute. The synchroscope speed should be very slow for correct breaker closure.

4.5.6 Using "EDG B SPEED" control, ADJUST engine speed until synchroscope is rotating slowly in "Fast" direction (located on MCB). [ ]

4.5.7 Using "EDG B EXC VOLT ADJUST" rheostat, MATCH "INCOMING" and "RUNNING" voltage (located on the MCB). [ ]

CAUTION

MVARs should not be allowed to exceed 1.5 out. MVAR response is sensitive to rheostat operation.

NOTE

"EDG B EXC VOLT ADJUST" rheostat (located on MCB) should be used, as required, to adjust reactive loading (MVARs).

4.5.8 SYNCHRONIZE
AND CLOSE EDG Output Breaker 3210.
AND RECORD Date/Time breaker 3210 closed on Enclosure 2 block 12 and below:
Date/Time: _____/_____ [ ]

4.5.9 PERFORM adjustments as necessary using "EDG B EXC VOLT ADJUST" rheostat (located on MCB). [ ]

4.5.10 SECURE synchroscope for EDG Output Breaker 3210 (located on MCB). [ ]

47. 064K6.07 001/2/1/RO#47/C/A 2.7/2.9/BANK/R/CR03701/4-006-009
Maintenance workers in the "A" Diesel Generator Control Room accidentally damaged the relief valve on one of the air receivers causing it to fail in the open position. The air compressor has started and is maintaining pressure in the receivers at 96 psig. If an "A" Diesel start were necessary at this time, which of the following operator actions would be required, if any?

A. Isolate the affected receiver and open the crosstie valves to the station air system.

B.✔ Isolate the affected receiver and open the crosstie valves to the "B" side air receivers.

C. Isolate the relief valve and allow air pressure to recover sufficiently to start the diesel.

D. No operator actions are required. The minimum required pressure for a diesel start is ≥ 75 psig.

Reasons:

A. The receivers do not have a crosstie with station air. However, station air is supplied to the compressor unloader valve.

B. Correct. These actions would align air to the "A" Diesel.

C. The relief valve cannot be isolated.

D. The minimum starting air pressure is 150 psig (single start).

OPS 4-06, Obj. 1-3 & 1-7; OPS 4-06 Section 1-4.0.D.2.b); EDBD Tab 6/15, Section 3.5

RO - Bank

Reference(s) provided: None

d) In AUTO, each compressor will cycle on and off to maintain starting air pressure for its associated EGDG between 230 psig and 250 psig. The start and stop signals for each compressor motor are supplied from independent pressure switches

2. Air Reservoirs (EGT-1A, -1B, -2A and -2B)

a) The two starting air reservoirs for each EGDG (EGT-1A and –1B for EGDG-A and EGT-2A and –2B for EGDG B) are located in their associated EGDG control rooms.

b) The minimum air pressure in each reservoir is required to be >225 psig.

1) This air pressure ensures six (6) successive start attempts on each EGDG.

2) A single start is ensured with air pressure as low as 150 psig.

3) Each air reservoir is equipped with a relief valve (EGV-5, -6, -7, or -8) set to open at 275 psig.

c) Each pair of reservoirs is connected to a common manifold, allowing either or both (normal) reservoirs to supply starting air to their EGDG.

1) Air reservoir cross tie valves (EGV-25 and 26) are provided to cross connect the EGDG A and EGDG B air start systems.

2) The cross tie valves are required to be closed during normal operation to provide separate and independent EGDG systems (required by Technical Specifications).

d) Two normally open manual air shut off valves (EGV-35 and 39) located downstream of the air reservoirs can be used to isolate the reservoirs or the diesel engine for maintenance. Each valve is equipped with a limit switch

3.0 COMPONENT PARAMETERS

COMPONENTS/PARAMETERS	REASON/SOURCE	INTERFACES
Air Pressure Switches (EG-11-PS, EG-12-PS) must be set at 225 psig decreasing and reset at 245 psig increasing.	These switches alert the operators to an Air Receiver low pressure condition. References 33, 36	
Cranking Air Pressure Switches (EG-13-PS, EG-14-PS, EG-15-PS, EG-16-PS) must be set at 150 psig increasing and reset at 100 psig decreasing.	These pressure switches alert operators to an EDG cranking condition. The set pressure is based on minimum pressure known from manufacturer's testing to ensure an EDG start. References 10, 26, 33	
Main Bearing Oil Booster Isolation Valves (EGV-60, EGV-61) *are required to be normally open.*	*These valves are required to be open to ensure proper bearing lubrication during EDG starting. They are closed only during EDG air barring.* *Reference 37*	
The Air Compressor Unloader Valves are required to receive air from the Service Air System.	The Air Compressors are non-safety related. Therefore a failure of the Unloader, if supplied from the EDG Air Start system, could cause discharge of the Air Receivers and resultant EDG inoperability. References 38, 20	
Air Compressors (EGP-1A, EGP-1B) *must have both AC and DC motors.*	*This ensures the ability to recharge the receivers via primary or emergency power.* *Reference 26*	**Electric Power:** 480 VAC EGM-1A ACDP-5, Fuse 11 EGM-1B ACDP-6, Fuse 11 125/250 VDC EGM-2A DPDP-6A, Fuses 9&3 EGM-2B DPDP-6B, Fuses 9&3
The Air Compressor Relief Valves (EGV-1, EGV-3) *are required to open at 275 psig.*	*The pressure is required to prevent over-pressurization of the Air Start piping.* *References 33, 26*	

48. 072K1.04 001/2/2/RO#48/MEM 3.3/3.5/BANK/R/CR03701/4-087-004
Which ONE of the following conditions will send a trip signal to the control complex normal duty supply fans (AHF-17A/B)?

A. Toxic gas actuation.

B. 4 psi Engineered Safeguards actuation.

C.✓ RM-A5 (Control Complex) gas actuation.

D. Placing a Control Complex Isolate/Reset switch in "Isolate".

Reasons:

A. Toxic gas actuation has been removed.

B. The RBIC signal will shift the damper into the recirc lineup but will not trip the fans.

C. Correct. The running 17 and 19 fans will trip.

D. This switch will only realign dampers, not trip fans.

OPS 4-87, Obj. 4; OPS 4-87 Section 1-3.0.F

RO - Bank

Reference(s) provided: None

2. Air exhausted from the 95' elevation, including the sampling hood exhaust from AHF-44A or -44B, is discharged to the Auxiliary Building ventilation charcoal filters by controlled access area exhaust fan AHF-20A or -20B.

3. This arrangement ensures that the air from this area is filtered and monitored prior to discharge through the plant vent.

D. Additional air is supplied to the chemistry and reagent labs from the Turbine Building by the controlled access area supply fan AHF-30. AHF-30 provides a separate source of supply air to the areas on the 95'elevation that contain the chemistry labs and the sampling room exhaust hoods.

E. On an Engineered Safeguards (ES) actuation on a Reactor Building 4 psig isolation signal, the system dampers will automatically switch to the recirculation mode (Figure 3).

1. Outside air intake dampers AHD-1C and -1E will close, outside air discharge damper AHD-2E will close (AHD-2C is normally closed) and return damper AHD-3 will fully open.

2. The normal duty supply fan will remain in operation as long as offsite power is available.

3. The supply dampers to the 95' elevation (AHD-12 and -12D) will also close.

4. These actions will establish the boundary for the Control Complex habitability envelope.

F. On receipt of a high radiation signal from RMA-5, the normal duty supply fans, AHF-17A and -17B, and the return fans, AHF-19A and -19B, will receive a trip signal.

1. Outside air intake dampers AHD-1C and -1E will close, outside air discharge damper AHD-2E will close (AHD-2C is normally closed) and return damper AHD-3 will fully open.

2. The supply dampers to the 95' elevation, AHD-12 and -12D, will also close.

3. Emergency fans AHF-18A and AHF-18B must be manually started from the Control Room.

49. 073A1.01 001/2/1/RO#49/C/A 3.2/3.5/BANK/R/CR03701/4-025-012
The following plant conditions exist:

- The plant has been tripped for 30 minutes; no cooldown is in progress.
- Pressurizer level is lowering.
- The makeup valve to the pressurizer, MUV-31, is 100% open.
- Makeup tank level is lowering.
- Reactor Building (RB) pressure is 0.5 psig and steady.
- The "A" OTSG is at low level limits.
- The "B" OTSG is at 50 inches and rising.
- Both OTSGs have a pressure of 1010 psig.

Which of the following sets of radiation monitors, if any, would be in alarm or rising?

A. For these parameters no radiation monitors would be in alarm or rising towards an alarm setpoint.

B. The RB high radiation monitors, RM-G29 and RM-G30.

C. The "B" atmospheric dump valve radiation monitor, RM-G28 and fuel handling building ventilation duct radiation monitor, RM-A4.

D.✔ The condenser off-gas radiation monitor, RM-A12, and the Auxiliary Building exhaust line monitor, RM-A2.

Reasons:

A. These parameters indicate an OTSG tube leak is in progress, some radiation monitors will be in alarm or rising.

B. Parameters indicate a "B" OTSG tube leak; no RB radiation monitors would be in alarm.

C. The atmospheric dump valves are not open, and therefore RM-G28 will not be in alarm.

D. Correct. Both RM-A12 and RM-A2 will be in alarm due to the tube leak in 'B' OTSG.

OPS 4-25, Obj. 3; OPS 3-24 Section 1-6.0.A

RO - Bank

Reference(s) provided: None

1-6.0 DIAGNOSIS AND MITIGATION

A. Identification

1. The initial indication is usually radiation alarms on condenser or the main steam lines. Confirmatory or alternate indication would include RCS leak rate, SG chemistry, FW flow variations, SG level variations and changes in steam exit conditions.
   a) In any case, if a SGTR is suspected, sample both SGs as soon as possible to verify your suspicions and identify the SG that is leaking.

B. End Point

1. Hot shutdown is not a safe end point for a SGTR. The leak from a failed tube cannot be isolated and will continue to be a concern until the RCS is cooled down and drained below the level of the leak or the steam generator is isolated and allowed to fill.

50. 073A4.03 001/2/1/RO#50/MEM 3.1/3.2/NEW/R/CR03701/
Which ONE of the following represents the effect of depressing the "CHECK SOURCE" button on RM-L2 and the reason for having a check source?

Pressing this button ___(1)___. A check source is used to ___(2)___.:

A.✔ (1) exposes the detector to a radioactive source
(2) verify proper monitor response

B. (1) injects an electronic signal downstream of the detector
(2) verify proper monitor response

C. (1) exposes the detector to a radioactive source
(2) provide a signal for monitor calibration

D. (1) injects an electronic signal downstream of the detector
(2) provide a signal for monitor calibration

Reasons:

A. Correct. The RM-Ls are equipped with radioactive sources for source check. The purpose of the check source is to verify proper monitor and detector operation.

B. Plausible since some RM-Gs have electronic check sources. RM-L2 is equipped with an actual radioactive source.

C. RM-L2 is calibrated using an external source using CHE-220R.

D. Plausible since some RM-Gs have electronic check sources. RM-L2 is equipped with an actual radioactive source. RM-L2 is calibrated using an external source using CHE-220R.

OPS 4-25, Obj. 3 & 4; OPS 4-25 Section 1-4.0.G.

RO - New

Reference(s) provided: None

1) The monitors consist of shielded gas detectors, sample lines containing the measured gas (full system flow for RM-A11 and partial flow for RM-A12), and solenoid actuated check sources.

e) RM-A12 has a Heat Trace circuit on the detector shield which eliminates condensation from ARP-1A discharge.

- Without the Heat Trace, condensate in the form of water and ammonia collect on the detector probe. The ammonia causes radioactive material to plate out on the probe resulting in an increased trend in measured radioactivity.

- The Heat Trace circuit is powered from ACDP-31.

f) Alarm and control features are the same as the Group One detectors. In addition to the Radiation Monitoring Panel, the channel readings are displayed on a multipoint recorder located on the back of the Main Control Board.

g) RM-A11 interlocks (high radiation alarm)

1) Closes WDV-393, 394, and 395 (Waste gas recycle isolation valves)

2) Closes WDV-439 (Waste gas release isolation)

h) There are no interlocks associated with RM-A12.

i)

G. LIQUID RADIATION MONITORING CHANNELS (RM-L1, L2, L3, L5, L6, L7)

1. The liquid radiation monitors employ gamma sensitive Sodium Iodide (NaI) scintillation detectors with photomultiplier tubes.

a) The detectors are located within lead shielded samplers and have Cs^{137} check sources.

2. The detectors monitor radiation levels in the following process streams:

Detector	Location	Sample Point
RM-L1	Auxiliary Building 119' elevation above the makeup and purification system Prefilter Room	Primary coolant letdown
RM-L2	Auxiliary Building 95' elevation - Sea Water Room	Plant discharge line prior to dilution
RM-L3	Auxiliary Building 95' elevation - Sea Water Room	Nuclear services closed cycle cooling system
RM-L5	Auxiliary Building 95' elevation - Sea Water Room	Decay heat closed cycle cooling system "A" train
RML-6	Auxiliary Building 95' elevation - Sea Water Room	Decay heat closed cycle cooling system "B" train
RML-7	Auxiliary Building 95' elevation - Sea Water Room	Waste neutralizer tank (SDT-1) discharge to the discharge canal

3. The liquid radiation monitors are partial flow samplers. Only a portion of the process flow is directed through the sampler enclosure by means of an adjustable bypass line.

   a) The sample flow rates are verified and adjusted as required by SP-300.

4. Controls and indications for the liquid radiation monitors are located on bays 3 and 4 of the Radiation Monitoring Panel and are similar to those associated with the RMA channels. In addition to the Radiation Monitoring Panel, the detector readings are displayed on a recorder located on the back of the Main Control Board.

5. The ratemeter for RM-L1 is similar to those used by the atmospheric radiation monitors.

   a) The readout for RM-L1 equates to microcuries/cc of I^{131}

6. RM-L2, -L3, -L5, -L6, -L7 use Victoreen digital ratemeters with the following indications and controls on the Radiation Monitoring Panel (Figure 10):

   a) Meter – A five digit display that equates to microcuries/cc of Co^{60}.

   b) Bar Graph – 10 to 10^7 cpm

      1) The bar graph display is normally a solid green line. If the WARN or HIGH setpoint is reached, the bar graph will begin flashing amber (WARN), or red (HIGH). Acknowledging the alarm will cause to display to change to steady on.

   c) Alarm Indicators

      1) HIGH alarm (red LED) – once actuated, the indicator will flash until acknowledged.

      2) WARN alarm (amber LED) once actuated, the indicator will flash until acknowledged.

      3) AUX alarm (red LED - once actuated, the indicator will flash until acknowledged

      4) FAIL alarm (red) – does not flash, and is not manually acknowledged

      5) RANGE alarm (red LED) – overrange/underrange. Does not flash.

   d) HV, HIGH, WARN, AUX pushbuttons - used to display the associated parameter/limit on the meter.

   e) CHECK source pushbutton and associated green LED indicator.

   f) ALARM ACK – resets the alarm relay outputs and causes the alarm indicators to stop flashing.

   g) POWER ON/OFF – alternate action pushbutton.

h) A sixteen (16) position rotary FUNCTION switch and three momentary contact pushbuttons labeled ENTER, VALUE, and DIGIT, that are used to set the WARN and HIGH alarm setpoints. To change a WARN or HIGH alarm setpoint:

1) Select the setpoint to be changed using the FUNCTION switch ("0" for the HIGH alarm or "1" for the WARN).

2) Depress the ENTER pushbutton. The current value for the setpoint will be displayed with the left most digit flashing.

3) The value of the flashing digit is changed using the VALUE pushbutton.

4) Depressing the DIGIT pushbutton will cause the next digit to flash and the previously flashing digit to stop flashing.

5) When the desired value is displayed, depress the ENTER pushbutton to store the new setpoint.

7. RM-L2 interlocks (high radiation alarm)

1) Closes WDV-891, liquid release isolation valve.

2) Closes WDV-892, liquid release isolation valve.

8. RM-L7 interlocks (high radiation alarm)

1) Closes SDV-90, SDT-1 release isolation valve.

9. The RM-L2/L7 VALVE/PUMP INTERLOCK BYPASS key switch is located on bay 3

a) In the bypass position, this switch allows valve SDV-90 to be opened without any DC Raw water pumps running, and allows valve WDV-892 to be opened without any SW Raw water pumps running.

b) This feature is provided to allow releases from SDT-1 using the SW Raw water flow path during periods when the

DC Raw water system is not in operation, or to allow RM-L2 releases when the SW Raw water system in not in operation.

c) This switch is normally in the NORMAL (not bypassed) position with the key removed.

1) The key is maintained under the administrative control of the SSOD.

2) Placing the switch in the bypass position will actuate a Main Control Board annunciator and generate an events recorder printout.

1-5.0 INSTRUMENTS AND CONTROLS

A. INDICATING INSTRUMENTATION

Instrument	Function	Range
RM-A01-RIR1	Atmospheric Radiation Recorder for RM-A1 and A2 (P/G/I), RM-A3, A4, A7, and A8 (G), RM-A5 and A6 (P/I and G). Liquid Radiation Monitor Recorder for RM-L1, L2, L3, L5, L6 and L7 (Back of MCB)	$10 - 1 \times 10^6$ cpm
RM-G01-RIR	Area Gamma Monitor Recorder for RM-G1thru G18 (Back of MCB)	$0.1 - 1 \times 10^5$ mR/hr
RM-G29-RIR	RM-G29 Recorder (Back of MCB)	$1 - 1 \times 10^{10}$ R/hr
RM-07-RR	RM-G25 and 28 Recorder (Back of MCB)	$0.1 - 1 \times 10^7$ mR/hr
RM-08-RR	RM-G26 and 27 Recorder (Back of MCB)	$0.1 - 1 \times 10^7$ mR/hr

1. RM-A01-RIR1 Operation (Westronics SV180 Recorder)

SCREEN BUTTON – (small box with symbols) Select view to be displayed.

PROGRAM MENU BUTTON – (PGM) Programming Function. Date/Time is the only one available to operators.

51. 074EK3.06 001/1/2/RO#51/MEM 3.9/4.2/NEW/R/CR03701/
EOP-7 "Inadequate Core Cooling" contains the following step:

> IF at any time, RCS PRESS is > 2400 psig, THEN cycle PORV to lower RCS PRESS.

Which ONE of the following is **NOT** a reason for this step:

A. minimizes PORV cycling

B. ✓ eliminates RCS to OTSG D/P

C. prevents lifting pressurizer safety valves

D. maximizes high pressure injection flow

Reasons:

A, C, D. All of these are reasons for performing this step, per the EOP-TBD cross-step document for EOP-7.

B. Correct. While this action would reduce RCS to OTSG D/P, the EOP limits the RCS pressure lowering so that the RCS remains at least 100 psig above OTSG pressure to promote RCS to OTSG heat transfer.

OPS 5-97, Obj. 3; EOP-TBD Cross-Step document for EOP-7

RO - New

Reference(s) provided: None

EOP Step: 3.7

TBD Step:	**Section:**	**Deviation Type:**
1.0	III.F	Add
1.2	III.F	Add

Generic Deviation: None

Justification:

The GEOG initiates HPI/LPI/CF in one major step with three details that are tied to Rule 1/2, maintaining full HPI/LPI flow and ensuring CFTs are not isolated. CR3 performs this verification over several steps to allow the EOP steps to provide adequate details, while avoiding making the step too large or complex. CR3 does not give distinct actions to maintain full HPI/LPI flow, but based on ensuring proper valve configuration along with EOP-13 Rule 2 this requirement is accomplished.

Step Basis:

This step is a verification that the LPI system is functioning properly, when the conditions for an actuation are present. This step ensures that the system is correctly aligned to provide maximum flow.

Most postulated ICC scenarios involve failure of HPI/LPI. Restoration of HPI/LPI at the onset of ICC will likely restore saturated or subcooled conditions. It should be noted that most of the ICC Region 2 guidance is the same guidance prescribed for loss of SCM. This is because the successful completion of these actions will restore adequate core cooling and the actions are not detrimental if ICC guidelines are entered inadvertently due to instrument errors.

Setpoint Code:	**Setpoint Value:**
RC020	< 500 psig RCS PRESS
DH19	2000 gpm LPI Flow each line
DH16	3000 gpm LPI/DH Flow

References: None

EOP Step: 3.8

TBD Step:	**Section:**	**Deviation Type:**
2.0	III.F	Add
2.1	III.F	None
2.2	III.F	None

Generic Deviation: None

Justification:

Instructions are added to close the PORV block valve if the PORV fails to close. Closing the PORV block valve is a contingency action which is an alternate method of isolating the flow path. The intent of the step is to minimize PORV cycling, prevent lifting pressurizer safety valves and maximize HPI/CFT/LPI flow to help cool the core and refill the RCS while maintaining adequate positive primary to secondary delta T.

Step Basis:

If RC pressure increases to the PORV setpoint, then the PORV should be opened and RC pressure reduced to about 100 psi above SG pressure or 100 psi greater than the next higher region. When RC pressure has been reduced to within 100 psi of SG pressure, then the PORV should be re-closed. This action minimizes PORV cycling, prevents lifting pressurizer safety valves and maximizes HPI/ CFT/LPI flow. Maximizing HPI/ CFT/LPI flow helps cool the core and refill the RCS (which will help lead to faster restoration of primary to secondary heat transfer) while maintaining adequate positive primary to secondary delta T (maintains SGs as a heat sink). Closing the PORV 100 psi above the next higher ICC region curve ensures operator action, to control RC pressure, does not cause the RCS to degrade into a more severe region.

Setpoint Code:	**Setpoint Value:**
RC009	100 psig RCS PRSS>OTSG PRESS
RC060	100 psig > next higher ICC region RCS PRESS
RC064	2400 psig RCS PRESS

References:

1. EDBD, Reactor Coolant System

3.0 FOLLOW-UP ACTIONS (CONT'D)

ACTIONS	DETAILS
3.8 ___ IF at any time, RCS PRESS is > 2400 psig, THEN cycle PORV to lower RCS PRESS.	• Lower RCS PRESS to the higher of the following: ___ 100 psig above OTSG PRESS ___ 100 psig above next ICC Region curve See Figure 1 • ___ IF PORV fails to close, THEN close RCV-11
3.9 ___ IF at any time, either OTSG PRESS is < 725 psig, THEN bypass EFIC isolation actuations.	• Depress "< 725 PSI STM GEN PRESS EFIC ACT BYPASS" push buttons: ___ Channel A ___ Channel B ___ Channel C ___ Channel D

52. 075K1.01 001/2/2/RO#52/MEM 2.5/2.5/BANK/R/CR03701/ROT-4-075-006
If the Nuclear Services Intake Screen (CWTS-2) becomes clogged with debris from the intake which of the following pump's suction will be affected?

A. RWP-1, RWP-2A & RWP-3A.

B. CWP-1A, CWP-1B, CWP-1C & CWP-1D.

C.✓ RWP-1, RWP-2B & RWP-3B.

D. CWP-1B, CWP-1D, RWP-1, RWP-2B & RWP-3B.

Reasons:

A. While RWP-1 draws suction from a separate intake via CWTS-2, RWP-2A and 3A draw suction from the forebay area which is supplied via CWTS-1A thru 1G.

B. The CWPs draw suction from the forebay area which is supplied via CWTS-1A thru 1G.

C. Correct. RWP-1, RWP-2B, and RWP-3B all draw suction from a separate intake via CWTS-2.

D. While RWP-1, 2B, and 3B draw suction from a separate intake via CWTS-2, CWP-1B and 1D draw suction from the forebay area which is supplied via CWTS-1A thru 1G.

OPS 4-75, Obj. 4-2; OPS 4-75 Section 4-2.0.B, OPS 4-57 Section 1-3.0.A & B

RO - Bank

Reference(s) provided: None

CHAPTER 4

INTAKE SUPPORT SYSTEMS

4-1.0 SYSTEM PURPOSE AND FUNCTIONS

A. INTAKE SUPPORT SYSTEMS FUNCTIONS

1. Remove large and small debris that could cause damage to rotating machinery or form blockage in the main condenser, secondary services closed cycle cooling heat exchangers, nuclear services closed cycle cooling heat exchangers or decay heat closed cycle cooling heat exchangers.

2. Protect submerged metal equipment from corrosion.

4-2.0 SYSTEM DESCRIPTION, Figure 11

A. The intake support systems consist of a bar trash rack, a trash rake, eight (8) traveling screens, a screen wash system and a cathodic protection system.

1. The intake structure, which is located at the intake canal, supports the seawater cleaning system, and serves as the mounting foundation for the circulating water pumps.

B. In addition to the circulating water system, the nuclear services and decay heat raw water systems draw seawater from the intake structure through two separate trains. The "A" raw water train draws seawater from the forebay area, which is common to all of the circulating water pumps. The "A" train supplies water to RWP-2A and RWP-3A. The "B" raw water train draws seawater from a separate intake through its own traveling screen. The "B" train supplies water to RWP-1, RWP-2B, and RWP-3B.

1. Detailed information on these systems is contained in lesson plan OPS-4-57, "Nuclear Services and Decay Heat Raw Water System"

9. SW system temperature is maintained ≥ 80°F during the winter months by recirculating a portion of the RW system, using RWP-1, back to the "B" RW pump pit after it has been heated by the SW heat exchangers.

10. To protect RW system carbon steel piping from the effects of saltwater corrosion, a lining of urethane is applied to the inside surface of the pipe. Urethane was chosen due to its superior bonding characteristics and high abrasion resistance.

11. The SW and DC heat exchangers heads and tubesheets are provided with cathodic protection to eliminate (or minimize) corrosion damage.

1-3.0 SYSTEM FLOWPATHS (Figure 1)

A. DECAY HEAT RAW WATER FLOWPATH

1. RWP-3A and -3B take a suction on their respective RW pit and pump the seawater to their associated heat exchanger (DCHE).

   a) RWP-3A draws seawater from the area of the intake structure that is common to all of the circulating water pumps (forebay area). The water travels though an underground pipe from the forebay to the "A" RW pit.

   b) RWP-3B draws seawater from a separate intake through its own traveling screen. The water travels though an underground pipe to the "B" RW pit.

2. The seawater makes one pass through the tubeside of the heat exchanger and flows to the discharge manifold on the west side of the seawater room.

   a) The seawater is delivered to the discharge canal through either one or both of the underground discharge lines, depending upon the lineup of valves RWV-32, -33, -40, and -41.

   b) The vertical and horizontal piping runs of the RW System form a "loop seal" at each end of the DCHE. This piping arrangement permits wet lay-up of the heat exchanger without any valves having to be closed. As a result, the DC system is always ready for use in the event of an ES

actuation. Domestic or demineralized water is normally used for wet lay-up purposes to inhibit marine growth.

B. NUCLEAR SERVICES RAW WATER FLOWPATH

1. The SW/RW pumps (RWP-1, -2A, and -2B) take a suction on their respective RW pits and discharge to a common header to the four parallel SW heat exchangers (SWHE).

   a) RWP-2A draws seawater from the area of the intake structure that is common to all of the circulating water pumps (forebay area). The water travels though an underground pipe from the forebay to the "A" RW pit.

   b) RWP-1 and RWP-2B draw seawater from a separate intake through its own traveling screen. The water travels though an underground pipe to the "B" RW pit.

2. RW enters the tube side of the double pass SWHEs. Heat is removed from the SW water flowing through the shell side. Raw water from the outlet of the SW heat exchangers is routed to the discharge header between RWV-32 and RWV-33.

C. NUCLEAR SERVICES RAW WATER RECIRCULATION FLOWPATH

1. A portion of the SW/RW flow downstream of the SWHEs is recirculated to the "B" RW pit. The amount of recirculation flow is controlled using RWV-150 to maintain SW temperature at the desired setpoint of 82°F.

1-4.0 MAJOR COMPONENT DESCRIPTION

A. RAW WATER PUMP PITS

1. Two rectangular shaped concrete rooms located below the 95'elevation of the seawater room of the Auxiliary Building form the "A" and "B" raw water pump pits. A permanently closed gate (RWG-3) separates the pits. The "A" pit (north pit) houses RWP-2A and RWP-3A. The "B" pit (south pit) houses RWP-1, RWP-2B, and RWP-3B. The tops of the pits are at the 95' elevation and the bottoms of the pits are at the 61' elevation.

53. 076AG2.2.22 001/1/2/RO#53/C/A 3.4/4.1/MOD/R/CR03701/5-078-002
The following plant conditions exist:

- The plant is operating at 100% reactor power.
- RCS Dose Equivalent I-131 (DEI) is 110 μCi/gm.

Which ONE of the following statements describes the required actions for this condition?

A. Maintain current power, verify DEI is within the acceptable region and restore DEI to within limits in 48 hours.

B. Reduce power to 70%, verify DEI is within the acceptable region and restore DEI to within limits in 48 hours.

C.✓ Shut down the plant and be in Mode 3 with Tave less than 500° F within 6 hours.

D. Perform SR 3.4.15.2 within 4 hours and be in Mode 3 with Tave less than 500° F within 6 hours.

Reasons:

A. This would be the applicable action if DEI were within the acceptable region. However, the value as given exceeds the acceptable region for 100% power.

B. This choice could be selected if the candidate mistakenly applied LCO 3.0.2. In this case, the reactor power level is not part of the Mode of applicability, but rather part of the graph. Even with power reduced, the LCO is still not met and it still remains applicable. Therefore, the required actions must be completed.

C. Correct. With DEI in the unacceptable region, the plant must be shutdown to Mode 3 with Tave less than 500° F within 6 hours per LCO 3.4.15 Required Action B.1.

D. This action would be required if gross specific activity was not within limits. No information is given which could lead to this conclusion.

OPS 5-78, Obj. 7; OPS 5-78 Section 1-4.0.J; TS 3.4.15

RO - Modified

Reference(s) provided: ITS 3.4.15

QUESTION PRIOR TO MODIFICATION

5-78 002/8//0020402002/076AK3.05/2.9/3.6/11-[1]/

The following plant conditions exist:

- The plant is operating at 100% reactor power.
- RCS Specific Activity is 59 μCi/gm Dose Equivalent I-131.

Which of the following statements describes the required actions for this condition?

A.✔ Operation may continue at 100% power for up to 48 hours.

B. Operation may continue for up to 48 hours if reactor power is decreased to 80%.

C. The unit must be in Hot Standby with Tave less than 500° F within 6 hours.

D. The unit must be in Hot Shutdown with Tave less than 280° F within 6 hours.

Reasons:

A. Correct. 48 hours is allowed to reduce activity as long as the activity vs power plot remains in the acceptable region of the curve.

B. Power does not have to be decreased to 80% for this activity level.

C. If activity was greater than 60 this would be the correct action.

D. If activity was greater than 60 then Mode 3 (Hot Standby) is required not Mode 4 (Hot Shutdown).

OPS 5-78 Section 1-4.0.J; TS 3.4.15; Task # 1190302001

LOI01-FPCF

3.4 REACTOR COOLANT SYSTEM (RCS)

3.4.15 RCS Specific Activity

LCO 3.4.15 The specific activity of the reactor coolant shall be within limits.

APPLICABILITY: MODES 1 and 2,
MODE 3 with RCS average temperature (T_{avg}) ≥ 500°F.

ACTIONS

CONDITION	REQUIRED ACTION	COMPLETION TIME
A. DOSE EQUIVALENT I-131 > 1.0 μCi/gm.	----------NOTE---------- LCO 3.0.4.c is applicable. ----------	
	A.1 Verify DOSE EQUIVALENT I-131 within the acceptable region of Figure 3.4.15-1.	Once per 4 hours
	AND	
	A.2 Restore DOSE EQUIVALENT I-131 to within limit.	48 hours
B. Required Action and associated Completion Time of Condition A not met. OR DOSE EQUIVALENT I-131 in the unacceptable region of Figure 3.4.15-1.	B.1 Be in MODE 3 with T_{avg} < 500°F.	6 hours

(continued)

ACTIONS (continued)

CONDITION	REQUIRED ACTION	COMPLETION TIME
C. Gross specific activity of the coolant not within limit.	C.1 Perform SR 3.4.15.2.	4 hours
	AND	
	C.2 Be in MODE 3 with T_{avg} < 500°F.	6 hours

SURVEILLANCE REQUIREMENTS

SURVEILLANCE		FREQUENCY
SR 3.4.15.1	Verify reactor coolant gross specific activity ≤ 100/Ē μCi/gm.	7 days
SR 3.4.15.2	----------NOTE---------- Only required to be performed in MODE 1. ---------- Verify reactor coolant DOSE EQUIVALENT I-131 specific activity ≤ 1.0 μCi/gm.	14 days AND Between 2 and 6 hours after THERMAL POWER change of ≥ 15% RTP within a 1 hour period

(continued)

SURVEILLANCE REQUIREMENTS (continued)

SURVEILLANCE		FREQUENCY
SR 3.4.15.3	----------NOTE---------- Not required to be performed until 31 days after a minimum of 2 EFPD and 20 days of MODE 1 operation have elapsed since the reactor was last subcritical for ≥ 48 hours. ---------- Determine $\bar{E}$.	184 days

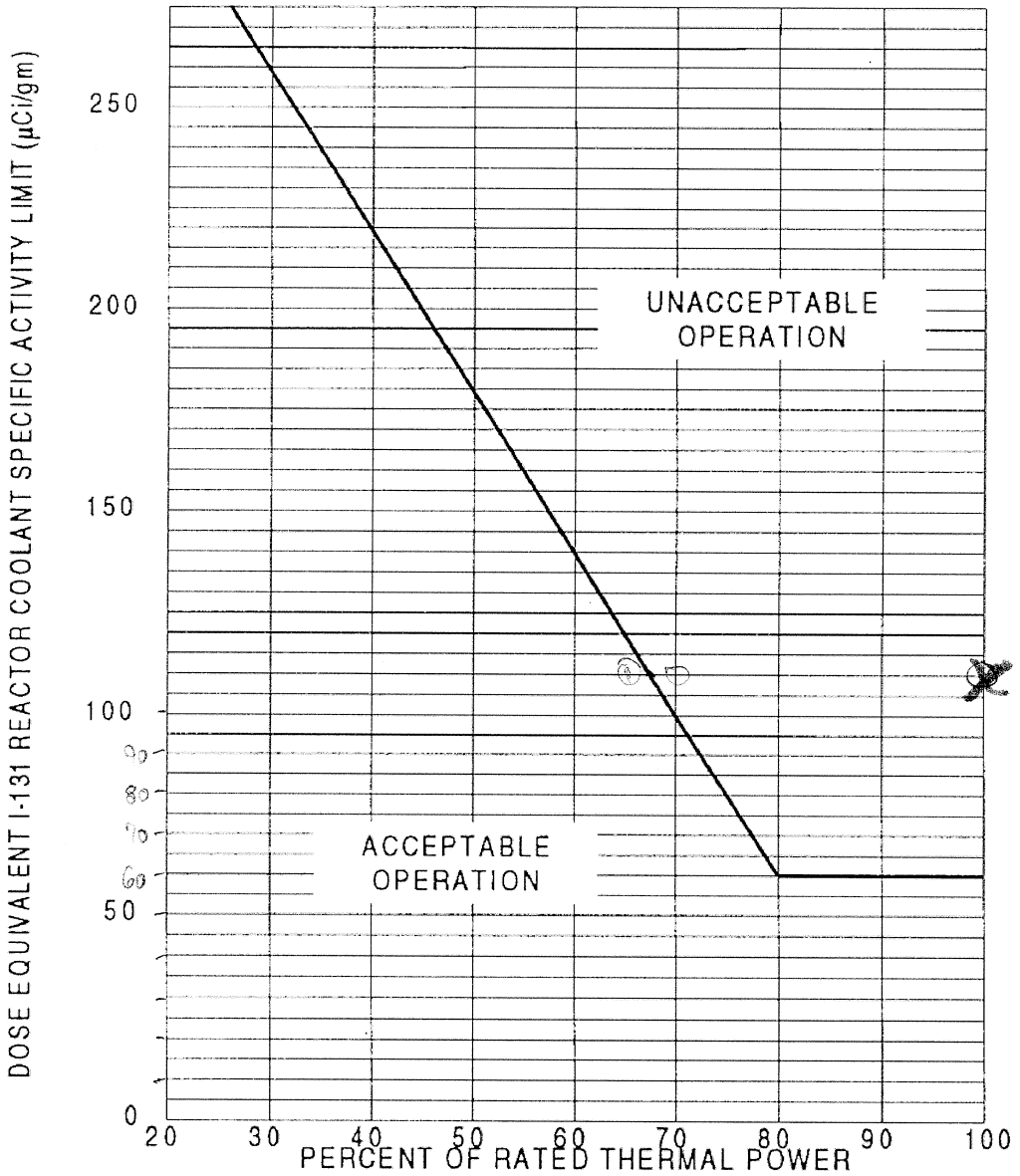

Figure 3.4.15-1 (page 1 of 1)
Reactor Coolant DOSE EQUIVALENT I-131 Specific Activity Limit
Versus Percent of RATED THERMAL POWER With Reactor Coolant
Specific Activity >1.0 µCi/gm DOSE EQUIVALENT I-131

3.6 **Acceptance Criteria**

3.6.1 The acceptable range for Dose Equivalent I-131 specific activity in the RCS is ≤1.0 μCi/g.

3.7 **Prerequisites**

None

4.0 **INSTRUCTIONS**

4.1 ✓ OBTAIN a Reactor Coolant sample in accordance with approved sampling procedure.

4.2 ✓ PERFORM a Dose Equivalent I-131 analysis in accordance with approved analytical procedure.

Dose Equivalent I-131 = 2.307E-3 μCi/g
The acceptable range is ≤ 1.0 μCi/g

4.3 ✓ RECORD the Dose Equivalent I-131 result on the applicable log sheet

4.4 ✓ RECORD the Dose Equivalent I-131 result in the Chemistry Data Management System under sample point CE-119.

TD / 4-10-07
Section 4.0 Complete Initial / Date

5.0 **FOLLOW-UP ACTIONS**

5.1 **Restoration Actions**

None

5.2 **Contingencies**

5.2.1 IF the RCS Dose Equivalent I-131 activity is outside the acceptance criteria, THEN PERFORM the following:

1. ___ NOTIFY the following personnel that the requirements of Technical Specification 3.4.15.2 have been exceeded, and that this event will require that a report be submitted to the NRC within 30 days per CP-151, External Reporting Requirements: [NOCS 062249]
   - ___ CRS
   - ___ E&C Supervision
2. ___ PERFORM RCS Dose Equivalent I-131 every 4 hours.
3. ___ FOLLOW the reporting requirements of CAP-NGGC-0200, Corrective Action Program.

4.0 **INSTRUCTIONS**

NOTE
The required sampling and analyses may be performed in any order necessary for timely completion of this surveillance.

4.1 ✓ OBTAIN a Reactor Coolant Strip Gas sample in accordance with approved sampling procedures.

4.2 ✓ PERFORM a gas gamma analysis in accordance with approved analytical procedures.

Gas gamma scan sample ID = 20070410005

4.3 ✓ OBTAIN a Reactor Coolant Liquid sample in accordance with approved sampling procedures.

4.4 ✓ PERFORM a liquid gamma analysis in accordance with approved analytical procedures.

Liquid gamma scan sample ID = 20070410003

4.5 ✓ PERFORM a Gross Specific Activity analysis in accordance with approved analytical procedures.

Gross Specific Activity = 1.283E-1 µCi/g

The acceptable range is ≤100/E-bar µCi/g

100/E-BAR = 6.207E2 µCi/g

4.6 ✓ RECORD the Gross Specific Activity result in the Chemistry Data Management System under sample point CE-119 for the sample obtained in Step 4.1.

Section 4.0 Complete Initial / Date 14-10-07

e) Notify Health Physics and vent Pressurizer and hot legs to RB atmosphere.

f) When RCS fill is desired, close RCS vents.

g) Remove charcoal canisters.

h) Align RCS vents to Waste Gas header.

i) Ensure water requirements for fill source are met.

j) Verify source range indication and record initial reading.

k) Notify Health Physics of fill and venting RCS is in progress.

l) Align N_2 to Pressurizrer.

m) Align Makeup and Purification System to fill RCS.

n) Go to appropriate step in OP-301.

J. HIGH RCS ACTIVITY

1. During this portion of OP-301, the following major activities are accomplished.

a) If RM-L1 is in alarm, notify Chemistry to sample RCS for specific activity and notify the CRS/SSO.

NOTE: Power maneuvers can cause specific activity to exceed these limits.

b) If an unexplainable increase in primary coolant activity occurs causing the activity level to reach or exceed > 0.1 μCi/gram I-131, then make notification to Chemistry to increase RCS sampling, Health physics, CRS/SSO, and Reactor Engineering.

NOTE: Anytime RM-L1 is in alarm and/or failed fuel is indicated by RCS sample, EM-202, Duties of the Emergency Coordinator, shall be reviewed to determine if action levels have been reached or

exceeded.

c) If a valid RM-L1 high alarm exists, notify Chemistry that a determination of percentage of failed fuel and RCS activity must be made.

d) If any of the following specific activities of the primary coolant are reached, then see TS 3.4.15, Reactor Coolant System Specific Activity, for action statement applicability.

1) $\geq$ 1.0 μCi/gram dose equivalent I-131,

2) $\geq$ 100/E μCi/gram,

K. OPERATION OF RCV-8, 9, 10 VALVE AUDIO MONITOR

1. During this portion of OP-301, the following major activities are accomplished.

CAUTION: MCB operator should be aware "PORV/SAFETY VALVE OPEN" alarm may occur while readings are being taken.

a) Notify CRS/SSO of intent to obtain readings.

b) Open the "PORV POSITION IND. & TSAT CABINET" door in the B ES 4160 switchgear room.

c) After readings are obtained, re-position the full scale range selector to the 30g setting for RCV-8, 9, and 10.

d) If valve monitoring module is in alarm, depress the RESET pushbutton.

L. FILL OF RCS J-LEGS TO < 134 FT FROM RCBT AFTER NOZZLE DAM REMOVAL

1. During this portion of OP-301, the following major activities are accomplished.

NOTE: It will take approximately 25,000 Gal. to fill all 4 cold legs.

54. 076K4.02 001/2/1/RO#54/C/A 2.9/3.2/BANK/R/CR03701/4-057-002
The following plant conditions exist:

- Plant startup is in progress.
- Main Turbine is ready to roll.
- Backup ES Transformer is supplying the "A" ES bus.
- Offsite Power Transformer is supplying the "B" ES bus.
- A sudden pressure fault on the Startup transformer has just occurred.

Based on the above conditions which of the following Raw Water Pumps (RWPs), if any, would be in operation?

A. "A" Emergency Duty Nuclear Services RWP, RWP-2A.

B.✔ "B" Emergency Duty Nuclear Services RWP, RWP-2B.

C. Normal Duty RWP, RWP-1.

D. No RWPs would be operating.

Reasons:

A. There is no low pressure start for RWP-2A and no ES actuation has occurred and power has been lost to the A ES Bus.

B. Correct. "B" ES bus still has power. RWP-2B will start on low pressure.

C. RWP-1 is powered from the "A" Unit 4160V bus which is lost due to the Startup transformer failure.

D. RWP-2B will auto-start on low pressure.

OPS 4-57, Obj. 4; OPS 4-57 Section 1-4.0.C.5; OPS 4-88 Section 1-4.0.K.3; OP-408 Step 3.1.7

RO - Bank

Reference(s) provided: None

5. Pump discharge header pressure and temperature indications are available on the ES "B" section of the Main Control Board.

6. Pump discharge pressure can be used as an indication of problems associated with total flow and heat exchanger blockage. Minimum and maximum pressure limits have been established for pump discharge pressure. Refer to the latest revision of SP-300 for the minimum and maximum discharge pressures for RWP-1. If pump discharge pressure is outside of the acceptable range contact the system engineer to determine if the SW Raw Water System is still capable of performing its intended safety function.

C. EMERGENCY DUTY NUCLEAR SERVICES RAW WATER PUMPS (RWP-2A AND RWP-2B)

1. The emergency duty nuclear services raw water pumps are located on the 95' elevation of the Auxiliary Building in the Seawater Room. The pumps are vertical, single stage centrifugal pumps rated at 14,100 gpm at 143' TDH.

   a) Required pump flow rates vary based on conditions during design bases hurricane conditions. Refer to the RW System Enhanced Design Basis Document for details.

2. The 700 HP motors for RWP-2A and RWP-2B are powered from 4160V ES Bus 3A and 4160V ES Bus 3B, respectively. Cooling for the pump motors is supplied by SW.

3. Each pump contains 7 bushings along the shaft (serving the same function as bearings) that require flushing/lube water. The location of the bushings and the flush water piping is the same as RWP-1.

4. RWP-2A and RWP-2B are normally operated from the Main Control Room. The pump control switches, which are located on the ES "A" and ES "B" section of the Main Control Board, have five positions: STOP, NORMAL-AFTER-STOP, START, NORMAL-AFTER-START, and PULL-TO-LOCK.

5. RWP-2A/-2B Interlocks:

   a) RWP-2A and RWP-2B receive an automatic start signal on an Engineered Safeguards actuation signal on low RCS pressure and/or high Reactor Building pressure. The "A" ES train actuates RWP-2A and the "B" ES train actuates

RWP-2B. These pumps sequentially load on their respective ES Buses as block #2 loads (5 second time delay).

b) RWP-2B will automatically start if SW/RW system pressure decreases to ≤ 7 psig and remains low for 2 seconds. RWP-2A does not receive a start signal based on low SW/RW pressure.

1) The low SW/RW pressure start of RWP-2B is defeated if the "B" Emergency Diesel Generator is supplying power to the "B" 4160 ES Bus. Under these conditions, the low pressure auto start is defeated to prevent RWP-2B from loading on the 4160V ES bus prior to its proper block loading sequence.

c) If the SW/RW system is in recirculation using RWP-1 and RWV-150, an automatic or manual start of RWP-2B will close RWV-150 if the "RW RECIRC CONTROL SURVEILLANCE SWITCH" is not in the "TEST" position.

1) This interlock is intended to prevent overheating the "B" RW Pit.

6. Pump discharge header pressure and temperature indications are available on the ES "B" section of the Main Control Board.

7. Pump discharge pressure can be used as an indication of problems associated with total flow and heat exchanger blockage. Minimum and maximum pressure limits have been established for pump discharge pressure. Refer to the latest revision of SP-300 for the minimum and maximum discharge pressures for RWP-2A & 2B. If pump discharge pressure is outside of the acceptable range contact the system engineer to determine if the SW Raw Water System is still capable of performing its intended safety function.

D. DECAY HEAT RAW WATER PUMPS (RWP-3A and RWP-3B)

1. The decay heat raw water pumps are located on the 95' elevation of the Auxiliary Building in the Seawater Room. The pumps are vertical, single stage centrifugal pumps rated at 9700 gpm at 75' TDH.

3) Emergency power alarm
4) Auto throwover alarm (indicates auxiliary and control power has transferred to the backup power source)
5) Pressure relief relay alarm
6) Liquid temperature alarm
7) Winding temperature alarm
8) Low liquid level alarm
9) Gas detector relay alarm

K. BACKUP ES TRANSFORMER (MTTR-6)

1. The BEST is a three phase, oil-filled transformer located outside the north wall of the CR-3 Turbine Building.

2. The BEST, along with the OPT, provides two full capacity, redundant, dedicated offsite power feeds to the 4160V ES buses.

3. The OPT is the normal source of power to the "A" ES 4160V bus, and the BEST is the normal source of power to the "B" ES 4160V bus.

   a) This arrangement was chosen because a loss of the startup transformer or Plant Line 4 will result in a loss of the BEST.

      1) Under these conditions power would still be available to EFP-1, which is supplied from the "A" 4160V ES bus.

4. An automatic gas control system maintains an atmosphere of dry nitrogen under a slight pressure between the top oil surface and the transformer cover.

   a) The cover gas isolates the oil in the transformer from the outside air preventing oxygen, moisture and other contaminates from being absorbed.

   b) The automatic control system consist of:

      1) A three stage gas regulator;
      2) A sump is used to prevent the oil vapor that condenses in the gas piping from entering the regulating equipment.

3.0 PERSONNEL INDOCTRINATION

3.1 Setpoints

	DESCRIPTION	VALUE
3.1.1	SW Surge Tank high/low level alarms	• High – 10' 0" • Low – 8' 6"
3.1.2	SW Surge Tank high/low pressure alarms	• High – 90 psig • Low – 77 psig
3.1.3	SWP-1B Emergency Nuclear Services Closed Cycle Cooling Pump auto starts	• SW pressure ≤ 110 psig <u>and</u> > 2 sec time delay
3.1.4	SWP-1A Emergency Nuclear Services Closed Cycle Cooling Pump auto starts	• SW pressure ≤ 110 psig <u>and</u> 8 sec time delay on start command to SWP-1B
3.1.5	SWP-1C Normal Duty Nuclear Services Closed Cycle Cooling Pump auto stop	• Either SWP-1A or SWP-1B starts <u>and</u> 15 sec time delay
3.1.6	Low SW System pressure alarm	• ≤ 110 psig
3.1.7	RWP-2B Emergency Nuclear Services Sea Water Pump auto start	• RW pressure ≤ 7 psig
3.1.8	RWP-1 Normal Nuclear Services Sea Water Pump auto stop	• Either RWP-2A <u>or</u> RWP-2B starts <u>and</u> 15 sec time delay
3.1.9	SWP-2A or SWP-2B standby SW Booster Pump auto start	• Discharge flow of running pump is < 140 gpm <u>and</u> 2 sec time delay

55. 078K1.04 001/2/1/RO#55/MEM 2.6/2.9/NEW/R/CR03701/
Which of the following automatic actions would be expected on a total loss of SC?

A. FWP-1A trip on high oil cooler temperature at 160°F.

B. FWP-2A trip on high oil cooler temperature at 180°F.

C. IAP-3A trip on high oil cooler temperature at 170°F.

D.✔ IAP-3A trip on high 2nd stage air temperature at 125°F.

Reasons:

A. Plausible since FWP-1A oil is cooled by SC. However, no high oil temperature trip exists.

B. Plausible since FWP-2A oil is cooled by SC. However, no high oil temperature trip exists.

C. Plausible since IAP-3A is cooled by SC and does have a high oil temperature trip. However, this trip is set at 180°F.

D. Correct. IAP-3A high air temperature trip (both 1st and 2nd stage) is set at 125°F.

OPS 4-81, Obj 2 & 3; OPS 4-81 Section 1-4.0.A.5

RO - New

Reference(s) provided: None

c) IAP-3C – the 12KV Crystal River Site distribution line (normal supply) or 480V Reactor Auxiliary Bus 3B (alternate supply).

3. The compressors are water cooled machines. Both the compressed air and the compressor are cooled through the use of water cooled intercoolers, aftercoolers and oil coolers. The source of this cooling water is as follows:

1) IAP-3A: Secondary Services Closed Cycle Cooling System

- When a start signal is generated for IAP-3A the SC inlet solenoid valve will open.

2) IAP-3B: Evaporative Cooler IAHE-6B

3) IAP-3C: Evaporative Cooler IAHE-6C

4. Interlocks and Controls (IAP-3A, 3B, and 3C)

a) Local Panel Indications/Controls

1) Trouble Light: The Red Trouble light will be on when any parameter is in the alarm condition.

2) Prelude Pump Running: The amber Prelube Pump Running light will be on any time the prelube pump is running.

3) Control Power ON/OFF Switch

4) Emergency Stop Push Button

5) Remote Enable: The Remote Enable white light is not used.

6) Auto Hot Start Enable: The Auto Hot Start white light will be on when the Auto Hot Start switch is in the Enable position.

7) Remote Function Switch: Not used.

5. Compressor trips:

   a) First stage high air temperature 125°F

   b) Second stage high air temperature 125°F

   c) Low oil pressure 8 psig

   d) High oil temperature 180°F

   e) Low oil temperature 35°F

   f) First stage high vibration 0.85 mils

   g) Low seal air 6 psig

6. CMC Microprocessor Controls

INST. NOTE: TP-05 Figure 4 should be used at this time.

   a) The heart of the CENTAC compressor is the CMC Microprocessor control panel. All functions performed by the compressor, including starting and stopping are controlled through the CMC panel.

   b) The CMC panel is comprised of nine buttons and a digital readout screen.

   c) The LCD screen is comprised of three windows style file folders:

      - System Folder,
      - Information Folder,
      - Settings Folder.

      1) The dotted line around the top of a file folder indicates that you are in that particular file. As with windows style folders, when a new folder is selected it is placed on top of the previous folder.

   d) Systems Folder:

56. 078K2.01 001/2/1/RO#56/C/A 2.7/2.9/BANK/R/CR03701/4-081-004
A loss of offsite power has occurred causing a plant trip. The 230kv switchyard and 12kv line are de-energized. Both EDGs have started and are powering their respective ES 4160V busses. Prior to the loss of offsite power IAP-3C was in lead, IAP-3B was in first lag, IAP-3A was in second lag and IAP-4 was in auto. Shortly after the loss of offsite power the control board operator observed that instrument air pressure lowered to ≈83 psig and began to slowly recover. Which ONE of the following accurately states the status of the instrument air system?

A. IAP-3C running loaded
IAP-3B running loaded
IAP-3A running loaded
IAP-4 running loaded
IADR-2 energized with one tower in service

B. IAP-3C not running
IAP-3B not running
IAP-3A not running
IAP-4 running loaded
IADR-2 de-energized with both towers in service and purge valve closed

C. IAP-3C running loaded
IAP-3B not running
IAP-3A running loaded
IAP-4 running loaded
IADR-2 de-energized with both towers in service and purge valve closed

D. IAP-3C not running
IAP-3B not running
IAP-3A not running
IAP-4 running loaded
IADR-2 energized with one tower in service

Reasons:

A. Incorrect due to IAP-3A,3B,3C have no power immediately following a LOOP concurrent with a loss of the 12kv line. IAP-3A powered from 480V Rx Aux. Bus 3A, IAP-3C powered from 480V Rx Aux. Bus 3B and IAP-3B powered from 480V Rx Aux. Bus 3B. Additionally IADR-2 would have both towers in service.

B. Correct. See reasons for 'A' above.

C. Same as 'A' above for air compressors.

D. IAV-647 would be open and IADR-2 would be de-energized with both towers in service.

OPS 4-81, Obj. 3; OPS 4-81 Section 1-4.0.A.2 & 1-4.0.H.7; OP-411 Steps 3.1.5, 3.1.6, 3.1.11 & 4.2.3

RO - Bank

Reference(s) provided: None

D. Air demand is directly related to system pressure, as pressure drops more air is required. The system maintains a header pressure of ≈110 psig. This air system is distributed throughout the plant for various uses.

1-3.0 SYSTEM FLOWPATHS

A. Instrument air compressors IAP-3A, -3B,and -3C) discharge through duplex prefilters, air dryers, and duplex after filters to three air receivers. From the air receivers, air is distributed throughout the plant.

B. Diesel driven air compressor IAP-4) discharges to IAT-4. From IAT-4 the air passes through prefilters, an air dryer and after filters and is distributed throughout the plant.

C. The distribution portion of the system consist of separate loops identified by plant building and floor elevation.

1. There is a 95' loop for the Turbine building, and also a 95' loop for the Auxiliary building.

2. Two loops exist for the 119' level, one for each building.

3. Off of each of these loops are root valves which then supply the various end loads of the air system.

1-4.0 MAJOR COMPONENT DESCRIPTION

A. AIR COMPRESSORS IAP-3A, -3B, AND -3C

1. IAP-3A, -3B, and –3C are Ingersoll-Rand CENTAC Model CVO compressors rated at 490 scfm at 110 psig based on an inlet air temperature of 95°F at 70% relative humidity.

   a) Motor: 175 HP and 460 VAC

2. The 175 HP motors for IAP-3A, -3B, and -3C are supplied from the following sources:

   a) IAP-3A - 480V Reactor Auxiliary Bus 3A

   b) IAP-3B - 480V Reactor Auxiliary Bus 3B (normal supply), or the 12KV Crystal River Site distribution line (alternate supply)

c) IAP-3C – the 12KV Crystal River Site distribution line (normal supply) or 480V Reactor Auxiliary Bus 3B (alternate supply).

3. The compressors are water cooled machines. Both the compressed air and the compressor are cooled through the use of water cooled intercoolers, aftercoolers and oil coolers. The source of this cooling water is as follows:

   1) IAP-3A: Secondary Services Closed Cycle Cooling System

      - When a start signal is generated for IAP-3A the SC inlet solenoid valve will open.

   2) IAP-3B: Evaporative Cooler IAHE-6B

   3) IAP-3C: Evaporative Cooler IAHE-6C

4. Interlocks and Controls (IAP-3A, 3B, and 3C)

   a) Local Panel Indications/Controls

      1) Trouble Light: The Red Trouble light will be on when any parameter is in the alarm condition.

      2) Prelude Pump Running: The amber Prelube Pump Running light will be on any time the prelube pump is running.

      3) Control Power ON/OFF Switch

      4) Emergency Stop Push Button

      5) Remote Enable: The Remote Enable white light is not used.

      6) Auto Hot Start Enable: The Auto Hot Start white light will be on when the Auto Hot Start switch is in the Enable position.

      7) Remote Function Switch: Not used.

psig and will provide modulating control of air pressure between 100 psig and 110 psig.

3) Local starting is accomplished by placing the toggle switch in the test position.

4) After a start, IAP-4 must be manually shutdown.

5) Indicating lights are available on the Control Room switch to indicate if IAP-4 is off or running.

H. IADR-2

1. IADR-2 is used to dry the air supplied to the Instrument Air System from IAP-4, the diesel driven compressor.

2. IADR-2 is an air reactivated, dual tower unit filled with activated Alumina desiccant.

3. Keeping one tower in operation while the other tower is in the reactivation mode provides continuous moisture removal.

4. Moisture in the air passing through the dryer adheres to the large surface area exposed by the desiccant in the absorber tower.

5. This dryer is rated for 1200 SCFM, and is powered from ACDP 30 Breaker 18.

6. Indication of system pressures are indicated on the gages above the control console. These gages will identify which tower is pressurized and what system pressure is reading. The control console has the red LED lights on the black cabinet, to turn this dryer (on), a toggle switch on the lower right hand corner of the control console must be positioned either forward (ON) or backwards (OFF). That is the power supply connection, the dryer is normally in a standby mode and will turn on when IAP-4 starts.

7. The fail safe condition for this dryer is de-energized with both towers in service drying air and the purge valve is closed

8. During the IADR-2 reactivation process, an "AMLOC" probe senses the moisture content of the tower that is off line (in the reactivation mode).

3.0 PERSONNEL INDOCTRINATION

3.1 Setpoints

	DESCRIPTION	VALUE
3.1.1	IAP-3A/B/C pre-load start interlock	• Seal air pressure > 6 psig
3.1.2	Instrument Air Compressor (IAP-3A/B/C) Alarms. REFER TO Enclosure 8, IAP-3A/B/C Alarm Response	• 1st stage high air temperature 120 °F • 2nd stage high air temperature 120 °F • Low oil pressure 10 psig • High oil temperature 170 °F • Low oil temperature 40 °F • 1st stage high vibration 0.65 mils
3.1.3	Instrument Air Compressor (IAP-3A/B/C) Trips. REFER TO Enclosure 8, IAP-3A/B/C Alarm Response	• 1st stage high air temperature 125 °F • 2nd stage high air temperature 125 °F • Low oil pressure 8 psig • High oil temperature 180 °F • Low oil temperature 35 °F • 1st stage high vibration 0.85 mils • Low seal air pressure 6 psig
3.1.4	Instrument Air System High Dew Point Alarm	• 20 °F
3.1.5	IA/SA Crosstie Auto Isolation Valve, IAV-30, Auto Closes	• 80 psig
3.1.6	Back up air supply control valve open	• 85 psig decreasing
3.1.7	Instrument Air Low Pressure Alarm	• 90 psig
3.1.8	Station Air Low Pressure Alarm	• 90 psig
3.1.9	First Lag Instrument Air Compressor (IAP-3A/B/C) Auto Start	• 105 psig

3.1 Setpoints

	DESCRIPTION	VALUE
3.1.10	Second Lag Instrument Air Compressor (IAP-3A/B/C) Auto Start	• 100 psig
3.1.11	IAP-4 Diesel Air Compressor Autostart	• 90 psig
3.1.12	Back Up air supply is stored in a bank of high pressure 2400 psig cylinders	• Pressure is maintained between 2250 and 2400 psig

57. 103A4.06 001/2/1/RO#57/MEM 2.7/2.9/NEW/R/CR03701/
The plant is operating at 100% power with an RB entry planned for this shift. If the entry team fails to notify the Control Room prior to entry, what indications are available that the entry has begun?

A. Security Central Alarm Station alarm only

B. MCB alarm only

C. MCB indicating lights and a Security Central Alarm Station alarm

D.✔ MCB indicating lights and a MCB alarm

Reasons:

A. There are no security alarms for the airlock doors.

B. Control Room indications consist of both an alarm and indicating lights.

C. There are no security alarms for the airlock doors.

D. Correct. Alarm PSA-X-06-08 "REACTOR BLDG PERSONNEL DOOR OPEN" and indicating lights on the RB Door Indication Panel on the PSA section of the MCB will indicate when either the inner or outer door are open.

OPS 4-63, Obj. 3 & 4; OPS 4-63 Section 1-8.0.A.2; AR-401 Window F-06-08

RO - New

Reference(s) provided: None

PSA-F ANNUNCIATOR RESPONSE	PSA-X-06-08	F-06-08

REACTOR BLDG PERSONNEL DOOR OPEN

EVENT POINT 1212

INDICATED CONDITION:

- REACTOR BUILDING PERSONNEL OR EQUIPMENT HATCH INNER OR OUTER DOOR NOT CLOSED.

REDUNDANT INDICATION WHICH WILL VERIFY ALARM:

- RB DOOR INDICATION PANEL MCB PSA SECTION.

OPERATOR ACTIONS FOR A VALID ALARM:

- INVESTIGATE OPEN HATCH.
- REFER TO OP-417.

DISCUSSION:

- REFER TO TS FOR ADMINISTRATIVE REQUIREMENTS.

REFERENCES: DRAWING 208-064 SHEET ME-04

SENSING ELEMENT: ME-1,3,5,7,23,24,25, & 26-KS

c) Provides guidance for implementation of Containment Closure, to comply with ITS 3.9.3, ITS 3.9.4, ITS 3.9.5, License Amendment Request # 272.

d) Provides guidance for implementation of Containment Closure and the time requirements for protecting the public in the event of a High radiation levels sensed by RM-A1G, Loss of Decay Heat Removal, Refueling Canal / Spent Fuel Pool Level Lowering or Fuel Handling accidents.

1-8.0 ABNORMAL OPERATIONS

A. ALARM RESPONSE PROCEDURES

1. Refer to AR-305, ESE Annunciator Response, for the following Annunciator Windows:

Window	Alarm	Setpoint
E-03-01	REACTOR BLDG PRESS HIGH (2 PSIG)	≥ 2 psig
E-03-02	REACTOR BLDG TEMP HIGH	≥123.6°F

2. Refer to AR-401, PSA F Annunciator Response, for the following Annunciator Windows:

Window	Alarm	Setpoint
F-06-08	REACTOR BLDG PERSONNEL DOOR OPEN	RB personnel or equipment inner or outer door not closed

B. AP-250, RADIATION MONITOR ACTUATION

1. In the event of an RM-A1 actuation with the containment equipment hatch or outage equipment hatch open, AP-250, Radiation Monitor Actuation, directs the operator to close the hatch once the Reactor Building purge has been terminated.

58. BW/A01AA2.2 001/1/2/RO#58/C/A 3.5/3.8/BANK/R/CR03701/4-014-003
The following plant conditions exist:

- The reactor is producing 1842 $MW_{thermal}$.
- Three reactor coolant pumps are operating.
- Control rod group 7 is 60% withdrawn.

Which of the following describes the ICS response, and required additional operator action(s), if any, if control rod 7-3 dropped fully into the core?

A. ICS will automatically run back to ≈ 54% ULD demand. No additional operator actions are required.

B. ICS, using an NI signal, will automatically run back to ≈ 60% reactor power. No additional operator actions are required.

C.✓ ICS will automatically run back to ≈ 54% ULD demand. The operator must ensure that reactor power is maintained less than 45%.

D. ICS, using an NI signal, will automatically run back to ≈ 60% reactor power. The operator must ensure that reactor power is maintained less than 45%.

Reasons:

A. With only three RCPs in operation the operator must reduce and maintain reactor power less than 45% when there is a dropped rod.

B. ICS runback is based on ULD demand and with only three RCPs in operation the operator must reduce and maintain reactor power less than 45%.

C. Correct. ICS runback is based on ULD demand. The ULD demand of ≈ 54% is approx. 60% Rx Power. Operator must reduce power to less than 45% due to 3 RCP operation.

D. ICS runback is based on ULD demand.

OPS 5-68, Obj. 7; OPS 4-14 Section 1-4.0.F.4; AP-545 Step 3.33

RO - Bank

Reference(s) provided: None

load depending on conditions within the limited subsystem.

- For example, if the unit is in the tracking mode due to having the diamond panel in manual and the rods are withdrawn, turbine header pressure will increase due to the increased power production. The turbine will open the throttle valves to maintain header pressure at setpoint and increase MWg. As MWg increases, MWd will increase.

- The opposite response will occur on a rod insertion.

4. Runbacks

a) The ULD will implement a runback (i.e. an automatic decrease in load demand) whenever the plant is above a limiting value as determined by plant component restrictions.

b) If the demand is lower than a runback limit, the ULD will restrict the demand from being increased above the limiting value. Each runback has a specific, independent limit value and runback rate.

c) Runbacks are accomplished by "locking up" the ULD (i.e. manual controls are switched out of the circuit), and decreasing demand at a preset specific rate to a predetermined maximum value.

d) When the demand is below the limiting value the ULD will revert to its manual mode and the operator input for rate of change and power level are placed back in the circuit.

e) The following are the currently active ICS runbacks:

ICS RUNBACKS			
Cause	**Limit**	**Rate**	**ULD**
4 RCPs	100.5%	50%/min	≈90%
3 RCPs	75%	50%/min	≈68%
2 RCPs	43%	50%/min	?
Loss of One MFWP or MFWBP	52%	50%/min	≈47%
Asymmetric Rod	60%	30%/min	≈54%

1) The four RCP runback does not normally occur because the plant should not be operating at this high of power level.

2) The two RCP runback to 43% should not occur due to a valid signal input since an RPS trip based on RCPs will not allow operation with less than three RCPs. However, if signal malfunctions within the ICS indicate that a two RCP pump combination exists, the ICS will respond to that input.

3) The asymmetric rod limit is based upon ULD demand. To ensure compliance with Technical Specifications, actual reactor power must be verified below the applicable limit and ULD demand further reduced if required.

4) The current runback rates exceed the rate at which the reactor control subsystem can reduce reactor power. This can result in upsets within the ICS (cross limits, etc).

f) Should more than one runback condition exist at the same time the one with the fastest rate of change will take precedence. When the load limit is reached for this runback condition, the runback with the next highest rate of change will take place, etc.

g) The runback with the lowest allowable demand will determine the maximum ULD demand allowed.

h) A runback or high load limit will take priority over a true "track" condition.

5. Load Limits

a) In the absence of either a runback or tracking condition unit load is determined by the operator using the AULD or the ULD hand/auto station in the manual mode.

b) Two Bailey modules located directly beneath the ULD hand/auto station are used to set the high and low demand limits. These limits are normally set for 13.6% (low) and 92.1% (high) (based on 0 – 1000 MWe) but may be set at any value the operator desires by adjusting the setpoint knob on the respective station to the desired limit.

c) Once set these limits will prevent the operator set demand from exceeding these values.

d) If either limit is adjusted to a value that would cause the current demand to be outside the new limit, demand will be modified at the operator set rate to a value within the new limit.

e) If demand is reduced by a tracking, runback, or high load limit to a value below the low load limit, the low load limit will be memorized (bypassed) and load will reduce to the value determined by the high limiting condition.

f) The low limit will not be re-instated until:

1) The high limiting condition clears, and

2) Either the low limit is adjusted to a value below the current demand or demand is increased above the low load limit setting.

3.0 FOLLOW-UP ACTIONS (CONT'D)

ACTIONS	DETAILS

STATUS

Asymmetric rod runback condition exists.

3.32 ___ Ensure RCS PRESS is stable.

- Control RCS PRESS between 2130 and 2180 psig using:

  ___ PZR Htrs

  ___ PZR spray

3.33 ___ Ensure Rx power is ≤ maximum power based on RCPs running.

RCPs Running	Maximum Rx Power	Maximum Rx Thermal Power
4	60%	1540 MWt
3	45%	1155 MWt

3.34 ___ Ensure vital plant parameters are approaching stability.

- ___ PZR level
- ___ Tave
- ___ MS Hdr PRESS

3.35 ___ Notify Reactor Engineer of plant conditions.

59. BW/A05AK1.3 001/1/2/RO#59/C/A 3.8/3.7/BANK/R/CR03701/4-090-006

The following light indications are present on the main control board. (Dark filled in circles indicate the light is ON.)

Startup	3203	3204
BEST	3205	3206
Unit Aux	3207	3208
EDG	3209	3210
OPT	3211	3212

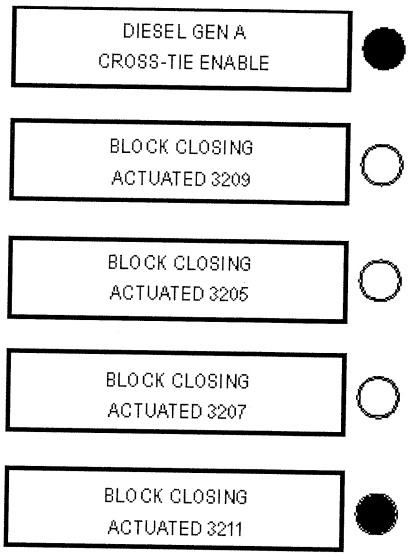

Which of the following sets of conditions will cause the above indication? Assume sufficient time for automatic actions to have occurred.

A. SP-354A is in progress with Breaker 3209 closed.
The offsite power transformer is OOS (tagged out) for oil leak repair.
A spurious 'A' train ES actuation has just occurred.

B. SP-354A is in progress with Breaker 3209 closed.
The Startup Transformer is OOS (tagged out) for oil leak repair.
A loss of Off-Site power has just occurred, Bkr 3211 has failed to open.

C.✔ SP-354B is in progress with Breaker 3210 closed.
The Startup Transformer is OOS (tagged out) for oil leak repair.
A loss of Off-Site power has just occurred, Bkr 3212 has failed to open.

D. SP-354B is in progress with Breaker 3210 closed.
The offsite power transformer is OOS (tagged out) for oil leak repair.
A spurious 'B' train ES actuation has just occurred.

Reasons:

A. These conditions have 3205, 3206 and 3209 closed. 3210 will be blocked.

B. These conditions have 3209, 3211 and 3212 closed. 3210 will be blocked.

C. Correct. These conditions have 3209, 3210 and 3212 closed. 3211 will be blocked.

D. These conditions have 3205, 3206 and 3210 closed. 3209 will be blocked.

OPS 4-90, Obj. 4; OPS 4-90 Section 1-4.0.O.1 & Figure 11; AR-702 EP 1183

RO - Bank

Reference(s) provided: None

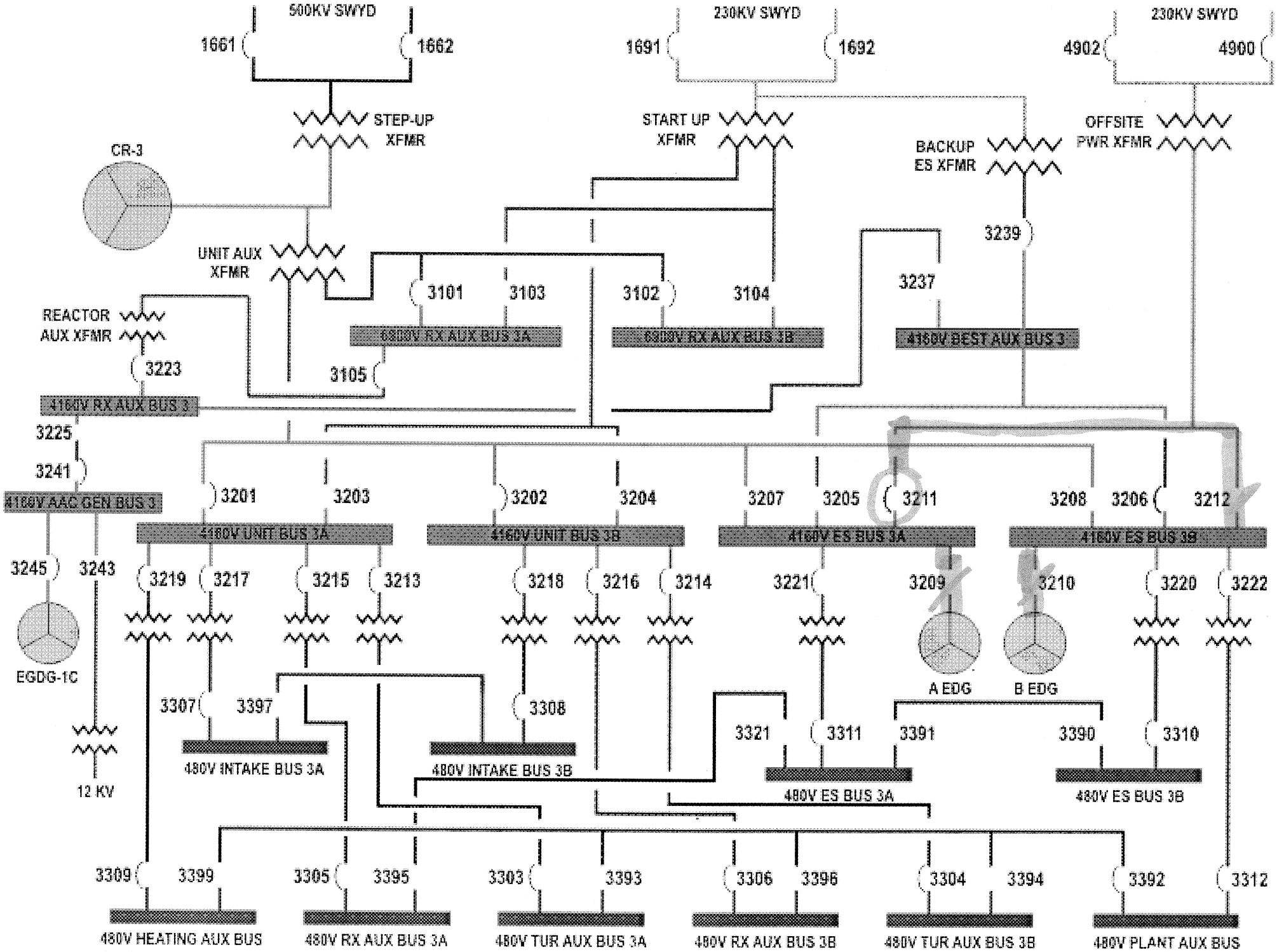

Figure 1, Rev 2 - A Electrical Distribution System

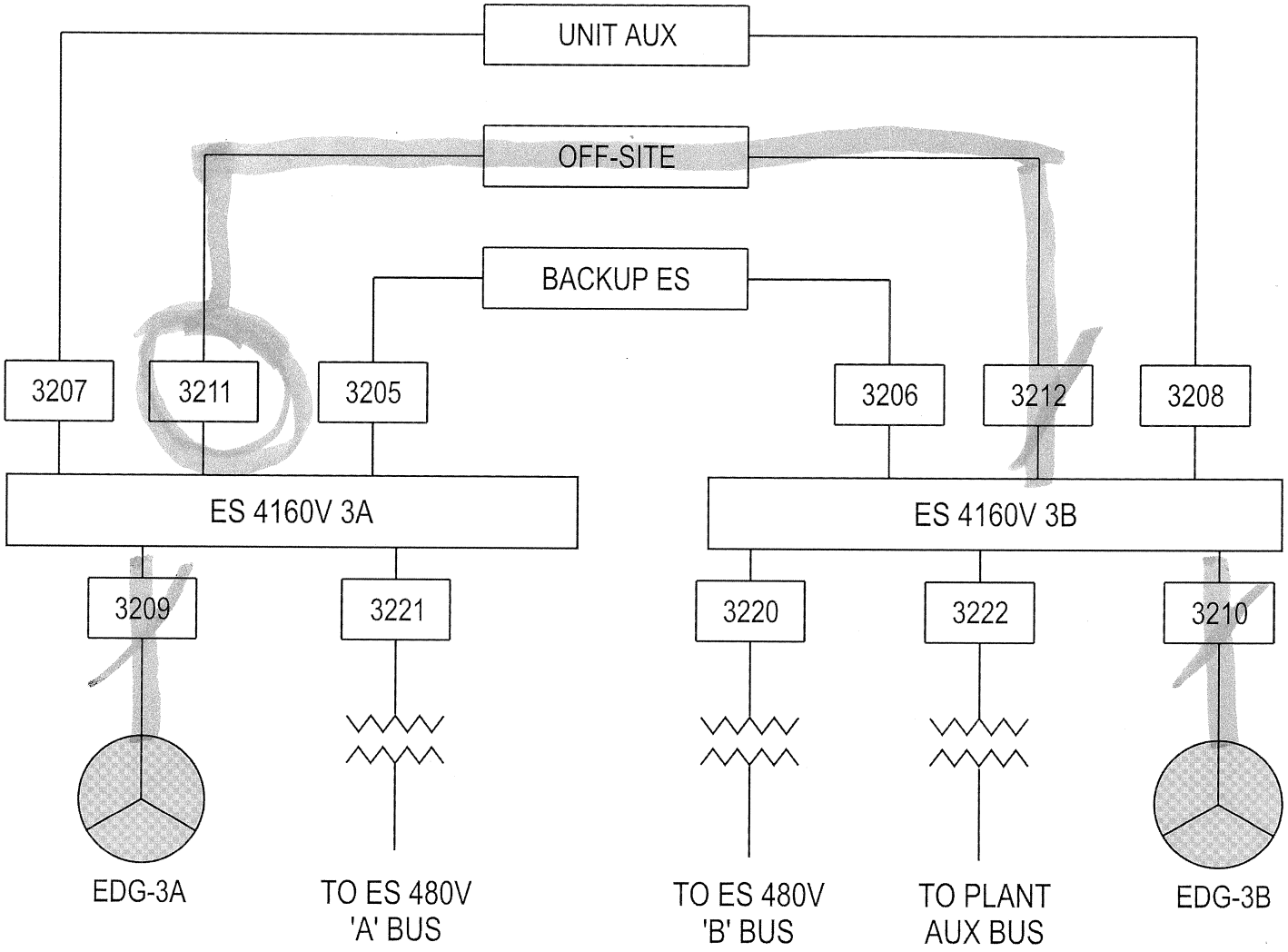

FIGURE 2 - ES 4160V BUSES 3A AND 3B

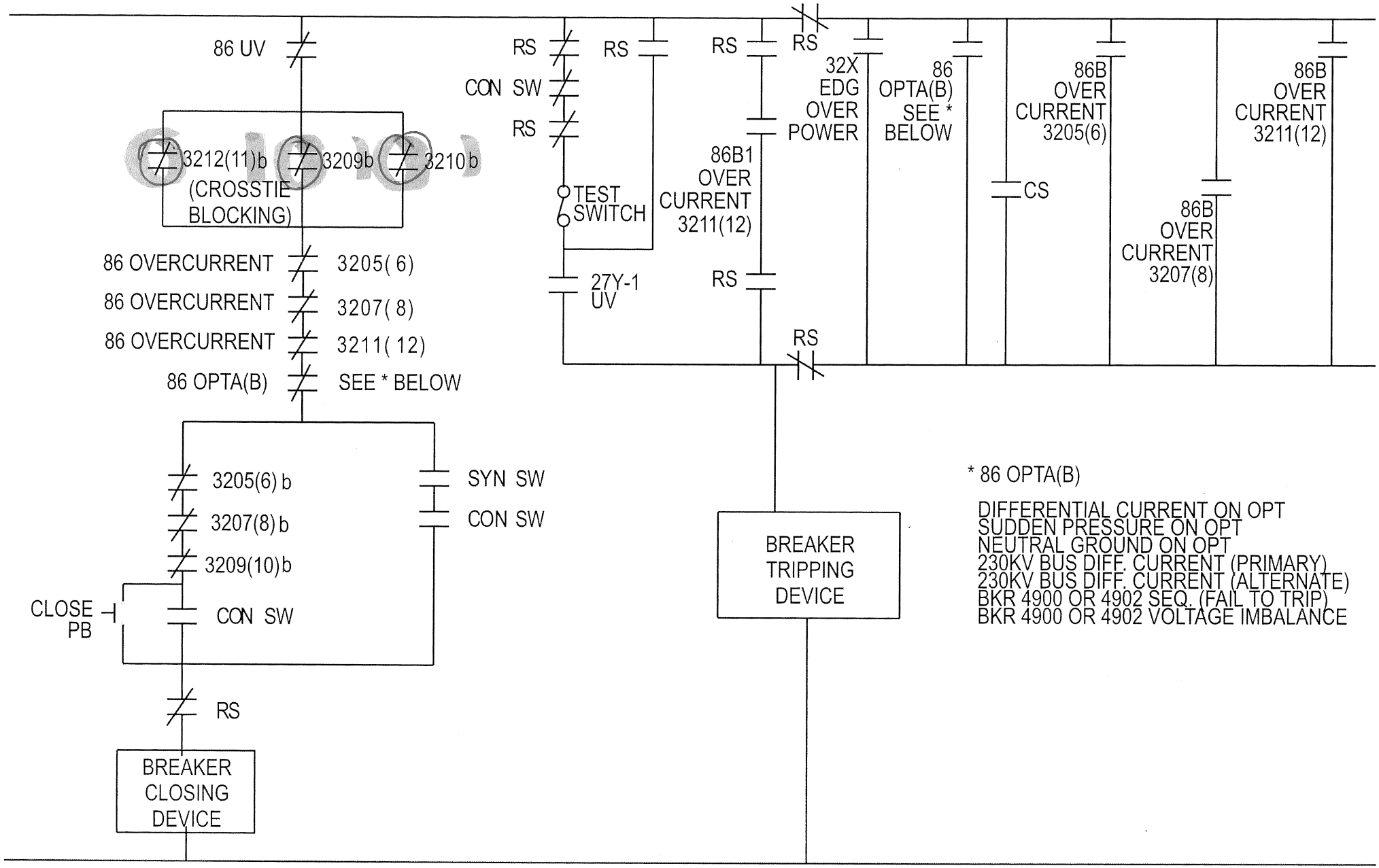

FIGURE 3 - BREAKER 32 (12) CONTROL SCHEME

3. ES MCC 3AB supplies ES loads which are either common to both ES trains or are capable of being selected to either train.

   a) Transferring power supplies for ES MCC 3AB can be accomplished from either the Main Control Room or the "A" ES 480V switchgear room. Push buttons and light indications are provided at both locations.

   b) There are no automatic transfers associated with ES MCC 3AB. An electrical interlock prevents transferring the MCC to a dead bus.

      1) Guidance for swapping power supplies to ES MCC 3AB is provided in OP-703.

O. INTERLOCKS/PROTECTION SCHEMES

1. Cross-tie Blocking (Figure 11)

   a) Crosstie blocking interlocks are a protective scheme associated with all ES 4160V bus feeder breakers. The primary function of the crosstie blocking interlocks is to prevent the emergency diesel generators from being operated in parallel, where a single malfunction could disable both generators.

   b) Crosstie blocking is accomplished by monitoring breaker contacts and blocking the close circuit of any breaker that, if closed, would cause the EDGs to be crosstied. "Crosstie blocking not in effect" is a close permissive for all of the breakers that can supply power to the ES 4160V buses.

      1) As an example, if breaker 3210 ("B" EDG output breaker) is closed and any pair of breakers from a single transformer (Backup ES, Offsite Power or Unit Auxiliary) is closed, relay AZ is energized.

         - Energizing relay AZ will open a contact in the close string for breaker 3209, preventing closure of the breaker.

   c) The crosstie blocking indications (Figure 12) located on the SSF section of the Main Control Board display the status of the crosstie blocking circuit.

1) Under normal conditions, none of the ES feeder breakers are blocked and the "Diesel Gen A (B) Cross-tie Enable" light is illuminated.

2) If the crosstie logic is satisfied for any of the feeder breakers, its associated "Block Closing Actuated" light will come on and breaker closure will be prohibited. The "Diesel Gen A (B) Cross-tie Enable" light may or may not extinguish. This light is dependant on the breaker combination that establishes the crosstie logic.

- The "Diesel Gen A (B) Cross-tie Enable" light will remain on if the crosstie logic is satisfied with both EDG output breakers closed. If both EDG breakers are not closed, and the crosstie logic is satisfied, then the "Diesel Gen A (B) Cross-tie Enable" light will extinguish.

d) Breakers 3391 and 3390, the ES 480V bus crosstie breakers, and the ES 480V bus 3A and 3B feeder breakers (3311 and 3310) are interlocked such that at least one of the breakers must be open at all times. This prevents the EDGs from being operated in parallel through the 480V ES distribution system.

2. Loss of Voltage Protection (FLUR) (Figure 13)

a) Each ES 4160V bus is provided with three loss-of-voltage relays referred to as First Level Undervoltage Relaying (FLUR). When an undervoltage condition is detected on 2 out of 3 undervoltage relays, the following sequence occurs:

1) After ≈7.8 seconds a set of auxiliary relays will actuate, causing the affected diesel to receive a start command, the affected bus feeder and load breakers to be stripped (except for running Block 1 loads), and a 3 second timer for EDG breaker closure to be started.

2) Although it requires 2 of the 3 undervoltage relays to cause a FLUR actuation, a single undervoltage relay will cause an alarm in the Main Control Room

SSF ANNUNCIATOR RESPONSE	SF-A2-02-04	Q-02-04

4KV ES A CROSS-TIE BLOCKED

EVENT POINT 1183

INDICATED CONDITION:

- BREAKERS 3209 AND 3210 CLOSED WITH EITHER 3206, 3208, OR 3212 CLOSED.

REDUNDANT INDICATION WHICH WILL VERIFY ALARM:

- DIESEL GEN "A" CROSS-TIE LIGHT EXTINGUISHED.
- IF 3206 CLOSED, THEN BLOCK CLOSING ACTUATED 3205 LIGHT IS ON.
- IF 3208 CLOSED, THEN BLOCK CLOSING ACTUATED 3207 LIGHT IS ON.
- IF 3212 CLOSED, THEN BLOCK CLOSING ACTUATED 3211 LIGHT IS ON.

OPERATOR ACTIONS FOR A VALID ALARM:

DISCUSSION:

REFERENCES: DRAWING 208-040 MT-129

SENSING ELEMENT: 3-52-1, 3-52S CONTACTS

60. BW/A08AK2.1 001/1/2/RO#60/MEM 4.0/3.8/NEW/R/CR03701/
AP-1080 "Refueling Canal/Spent Fuel Pool Level Lowering" contains the following step:

> IF refueling canal level is lowering, THEN notify PPO to close fuel transfer tube valves as far as possible.

Which ONE of the following represents the reason this step directs the valves to be closed "as far as possible" vice closed completely?

A.✓ Fuel transfer carriage cable interference if cables are connected.

B. Manual blocks installed to ensure redundant makeup paths available.

C. Postulated high D/P in the event of a leak in the SFP side.

D. Postulated high D/P in the event of a leak in the RB side.

Reasons:

A. Correct. AP-1080 contains a caution box that reminds the operator that the valves cannot be fully closed when the fuel transfer carriage cables are connected.

B. While certain shutdown conditions require redundant makeup capabilities, no path requires blocking open the fuel transfer tube valves.

C/D. The D/P due to leakage on either side of the valves would be negligible.

OPS 5-72, Obj. 6; AP-1080 Step 3.11

RO - New

Reference(s) provided: None

3.0 FOLLOW-UP ACTIONS (CONT'D)

ACTIONS	DETAILS

CAUTION

- **Fuel transfer tube valves cannot be fully closed when fuel transfer carriage cables are connected.**
- **Damage to fuel transfer tube valves and carriage cables may result from over tightening.**

3.11 ___	IF refueling canal level is lowering, THEN notify PPO to close fuel transfer tube valves as far as possible (162 ft AB west end of SF pool).	• ___ SFV-119 "FUEL TRANSFER TUBE ISO" • ___ SFV-120 "FUEL TRANSFER TUBE ISO"
3.12 ___	IF refueling canal level is lowering, THEN notify the WCC SRO or Penetration Coordinator to establish Containment Non Pressure Retaining Capability.	• See CP-341, Containment Penetration Control.
3.13 ___	IF RCS, OR DHR leak is suspected, THEN **CONCURRENTLY PERFORM** AP-520, Loss of RCS Coolant or Pressure, beginning with Step 3.1	

61. BW/E02EK2.1 001/1/1/RO#61/C/A 3.8/4.0/BANK/R/CR03701/4-012-003
The following plant conditions exist:

PARAMETER	DATA
Rx power	90%
Linear amp power range	top 45% bottom 45%
RCS T_{hot}	601
RCS pressure	1955
RCS flow	1.47×10^8 lbm/hr
RB pressure	+0.5 psig
RCP monitor	A 8,300 kw
	B 7,100 kw
	C 9,500 kw
	D 8,000 kw
Turbine auto stop oil	99 psig
MFW control oil	114 psig

Based on the above data which ONE of the following parameter changes will require immediate entry into EOP-2, Vital System Status Verification? (consider each option independently)

A. Linear amp power range top 40 bottom 60

B.✓ RCS pressure 1920 psig

C. RCP monitor B 2152 kw

D. MFW control oil 90 psig

Reasons:

A. For this power level axial imbalance would need to be approximately 30.

B. Correct. Variable low pressure trip setpoint is 1928 psig.

C. Setpoint for loss of an RCP is < 1152 kw or >14,400 on two RCPs.

D. MFW conrol oil trip setpoint is 55 psig.

OPS 4-12, Obj. 4; TS Table 3.3.1-1; COLR

RO - Bank

Reference(s) provided: None

Reactor Protection System (RPS) Instrumentation

RCS Variable Low Pressure Setpoint Equation

$P_{Trip} \geq (11.59 * T_{HOT} - 5037.8)$ psig

This limit is referred to by ITS Table 3.3.1-1, Item 5

Table 3.3.1-1 (page 1 of 1)
Reactor Protection System Instrumentation

FUNCTION	APPLICABLE MODES OR OTHER SPECIFIED CONDITIONS	CONDITIONS REFERENCED FROM REQUIRED ACTION D.1	SURVEILLANCE REQUIREMENTS	ALLOWABLE VALUE
1. Nuclear Overpower -				
a. High Setpoint	1,2[a]	F	SR 3.3.1.1 SR 3.3.1.2 SR 3.3.1.5 SR 3.3.1.7	≤ 104.9% RTP
b. Low Setpoint	2[b],3[b] 4[b],5[b]	G	SR 3.3.1.1 SR 3.3.1.5	≤ 5% RTP
2. RCS High Outlet Temperature	1,2	F	SR 3.3.1.1 SR 3.3.1.4 SR 3.3.1.6	≤ 618°F
3. RCS High Pressure	1,2	F	SR 3.3.1.1 SR 3.3.1.4 SR 3.3.1.6 SR 3.3.1.7	≤ 2355 psig
4. RCS Low Pressure	1,2[a]	F	SR 3.3.1.1 SR 3.3.1.4 SR 3.3.1.6 SR 3.3.1.7	≥ 1900 psig
5. RCS Variable Low Pressure	1,2[a]	F	SR 3.3.1.1 SR 3.3.1.4 SR 3.3.1.6	RCS Variable Low Pressure equation in COLR
6. Reactor Building High Pressure	1,2,3[c]	F	SR 3.3.1.1 SR 3.3.1.4 SR 3.3.1.6	≤ 4 psig
7. Reactor Coolant Pump Power Monitor (RCPPM)	1,2[a]	F	SR 3.3.1.1 SR 3.3.1.4 SR 3.3.1.6 SR 3.3.1.7	More than one pump drawing ≤ 1152 or ≥ 14,400 kW
8. Nuclear Overpower RCS Flow and Measured AXIAL POWER IMBALANCE	1,2[a]	F	SR 3.3.1.1 SR 3.3.1.3 SR 3.3.1.5 SR 3.3.1.6 SR 3.3.1.7	Nuclear Overpower RCS Flow and AXIAL POWER IMBALANCE setpoint envelope in COLR
9. Main Turbine Trip (Control Oil Pressure)	≥ 45% RTP	H	SR 3.3.1.1 SR 3.3.1.4 SR 3.3.1.6	≥ 45 psig
10. Loss of Both Main Feedwater Pumps (Control Oil Pressure)	≥ 20% RTP	I	SR 3.3.1.1 SR 3.3.1.4 SR 3.3.1.6	≥ 55 psig
11. Shutdown Bypass RCS High Pressure	2[b],3[b] 4[b],5[b]	G	SR 3.3.1.1 SR 3.3.1.4 SR 3.3.1.6	≤ 1820 psig

(a) When not in shutdown bypass operation.

(b) During shutdown bypass operation with any CRD trip breakers in the closed position and the CRD Control System (CRDCS) capable of rod withdrawal.

(c) With any CRD trip breaker in the closed position and the CRDCS capable of rod withdrawal.

62. BW/E03EA2.1 001/1/2/RO#62/C/A 3.0/4.0/BANK/R/CR03701/5-085-006
Following a reactor trip and completion of EOP-2, Vital System Status Verification, Immediate Actions, the SPDS screens display a "-11" with a yellow background. What does this display mean and what action should follow?

A. Reactor Coolant temperature and pressure have entered the Inadequate Core Cooling Region; EOP-3, Inadequate Subcooling Margin, should be entered.

B. Reactor Coolant temperature and pressure have entered the Inadequate Core Cooling Region; EOP-2, Vital System Status Verification, should be completed.

C.✔ Subcooling Margin has been lost; EOP-3, Inadequate Subcooling Margin, should be entered.

D. Subcooling Margin has been lost; EOP-2, Vital System Status Verification, should be completed.

Reasons:

A. and B. The SPDS background would be red if an ICC region had been entered.

C. Correct. Adequate SCM has been lost, EOP-3 should be entered.

D. Once immediate actions are completed in EOP-02, EOP-02 should be exited for EOP-03.

OPS 5-85, Obj. 1 & 5; EOP-2; EOP-3; OPS-4-21 Section 1-4.0.D.7

RO - Bank

Reference(s) provided: None

6) Radiation

- The Radiation alert will actuate to warn the operator of increasing radiation levels or a low failure in one or more of the monitored release paths.

- For Alert values, see OP-509.

7) DHRS

- The DHRS alert is only operational during the decay heat mode. This ALERT is armed when RCS pressure is less than 284 psig and Tcold in both loops is less than 300°F.

- Once armed, the alert will alarm if either DHP is running, flow is verified to be <2800 gpm or >4000 gpm, OR Tcold is <283°F in both loops and pressurizer level is >220 inches.

7. Subcooling Margin

a) The SPDS also provides a subcooling margin display. During normal operation (adequate SCM), the SPDS display indicates SCM and the temperature source (Thot or Tincores) in a small box at the top of the screen (Figure 9).

1) The box also contains an ALARMED or NOT ALARMED message. The message indicates whether the display will perform its alarm function on a loss of SCM. This function is toggled using the F12 key on the keyboard, when SPDS is the displayed program (F or G on Keyboard Commander on the Operators Console).

b) Following a reactor trip, the SCM alarm function will be armed following a 5 second delay. If at any time following arming of the function adequate SCM is lost, the SCM display will increase in size to fill the screen with a negative value for SCM, a small box indicating the temperature source, and a timer showing the elapsed time since the loss of adequate SCM. This display will have a yellow background as long as an inadequate SCM exists. (Figure 10)

c) If the ALERT ACK button is depressed, the SPDS display will reappear on the screen and the SCM window will move to the lower portion of the screen. If inadequate SCM still exists, the background of the SCM window will remain yellow. (Figure 11)

d) A 10 minute timer is started when the alarm is acknowledged. If adequate SCM regained and then lost again within that 10 minute interval, the window will return to the yellow background, but the display will not return to the full screen window.

e) If the pressure/temperature point moves to the ICC curve, the display will again go full screen but with a red background. The displayed number will be positive indicating the degrees of superheat. Again, acknowledging the alarm will move the display to the lower portion of the screen.

f) Anytime adequate SCM exists, the display can be toggled between the normal operating window and the larger display at the bottom of the screen by depressing the Thot/INCORE button twice (rapidly). This feature can be used to provide a more convenient display when monitoring SCM.

g) On the PSA panel, there are two additional SCM indications. These indicators are slaves to the SPDS displays. These monitors will reflect any selections made on the SPDS.

3.0 FOLLOW-UP ACTIONS

ACTIONS	DETAILS
3.1 ___ Perform symptom scan.	1 ___ Station Blackout 2 ___ Inadequate SCM 3 ___ Inadequate Heat Transfer 4 ___ Excessive Heat Transfer 5 ___ SG Tube Rupture
3.2 ___ Notify personnel of entry into EOP-02	• PA announcement: ___ Reactor trip • ___ STA • ___ Plant Operators • ___ SSO (evaluate plant conditions for potential entry into Emergency Plan)
3.3 ___ Notify SPO to **CONCURRENTLY PERFORM** EOP-14, Enclosure 1, SPO Post-Trip Actions.	

INADEQUATE SUBCOOLING MARGIN

1.0 ENTRY CONDITIONS

IF in one of the following modes:

- Mode 3
- Mode 4

AND adequate subcooling margin does NOT exist,

THEN use this procedure.

63. BW/E04EK3.3 001/1/1/RO#63/MEM 4.2/3.8/BANK/R/CR03701/ROT-5-102-013
EOP-4 requires the RCPs be stopped when incore temps rise 50°F above the value recorded when the EOP was entered.

What is the basis for this requirement?

A.✓ Limit OTSG tube to shell stresses.

B. Adequate SCM will soon be lost.

C. Protects RCP seals.

D. Maintains RCS less than 70% void fraction.

Reasons:

A. Correct. With no FW supplies to the OTSGs, they are assumed to be dry. With no inventory to thermally couple the shell with the tubes, the shell will be cooling down at ~ 6 degrees per hr. The tubes will heat up at the same rate as the RCS. This can lead to excessive compressive stresses. Stopping RCPs will slow the rate of temperature rise of the tubes.

B. Plausible since heatup is in progress. If cooling cannot be restored, a loss of SCM will eventually result which would require a trip of the RCPs.

C. Plausible since RCP seals can be damaged by thermal stresses. However, cooling to the RCP seals will likely still exist.

D. Plausible since RCPs are tripped on a loss of SCM to ensure they are tripped before the RCS reaches a 70% void fraction.

OPS 5-102, Obj. 3; EOP-TBD cross-step document for EOP-4 Step 3.9

RO - Bank

Reference(s) provided: None

EOP STEP	ELEMENT	TBD STEP	ELEMENT	DEVIATION TYPE
3 . 9	ACTION			Add

GENERIC JUSTIFICATIONS: GD-24

JUSTIFICATION: This action is taken to prevent excessive OTSG tube stresses. With no primary to secondary heat transfer the OTSGs are probably dry, so the OTSG shell is cooling down. HPI cooling has not yet been established, so the RCS and thus the OTSG tubes are heating up. Tripping the RCPs under these conditions is discussed in Volume 3 of the TBD, chapters IV.A section 2.3, and III.C section 2.3. Also discussed in Volume 3, Chapter IV.A, Section 2.2, is the exception for not tripping the RCPs if running because they were not tripped immediately following loss of adequate SCM.

BASIS: This step is provided to protect the OTSG tubes from excessive compressive stresses. At this time, there is no RCS cooling so a heatup will be occurring. Since there is no FW supply for the OTSGs, they are assumed dry. In a dry OTSG, there is no thermal communication between the tubes and the shell. This results in the shell cooling down at a rate of about 6°F/Hr due to insulation losses. The tubes are in direct contact with the RCS and RCPs are running, so the tubes will heat up with the RCS. FTI has established a limit of 60°F difference in temperature between the tubes and shell when the tubes are hotter than the shell.

Tripping the RCPs reduces the flow through the OTSG tubes, and thus reduces their heatup rate. This serves to slow further increases in tube to shell temperature differences. Ultimately the tube to shell temperature difference can only be limited by stopping the RCS heatup or providing FW to the OTSG, to re-establish thermal communication between the tubes and shell.

The requirement that adequate SCM exists as a condition for stopping the RCPs is to avoid an inappropriate trip of the RCPs. The requirement to keep the RCPs running in this case is based on the contingency action for failure to stop RCPs within 1 minute of loss of adequate SCM. This contingency is to run all operating RCP until adequate SCM is restored or LPI flow is adequate in each injection line. (See Rule 1).

REFERENCES: 3F0404-09
FSAR change 2003-0019
NTM 96591 assignment 45

---

3 . 10	ACTION	III.C	1.0	DETAIL	Add Sequence

GENERIC JUSTIFICATIONS: GD-24

JUSTIFICATION: The GEOG step requires that feedwater is available before proceeding while the EOP requires that feedwater flow exists, OTSG integrity exists, and the OTSG is not isolated for TRACC. While not included in the GEOG, these additional criteria are also necessary for an OTSG to be used for heat transfer. Failure to meet either of these two additional criteria would make the OTSG unavailable, even if FW was available.

BASIS: The purpose of this step is to determine whether an OTSG is available for heat removal. If one is, then this step routes to the instructions for establishing the available OTSG(s) as a heat sink. This procedure could be entered from another EOP, due to inadequate heat transfer. For this condition, the branch provides instructions for venting the hot legs, lowering OTSG pressure and raising OTSG levels in an attempt to establish OTSG heat transfer.

The conditional statement for feedwater says "EFW or AFW flow". This requires that the available EFW or AFW pump be running and providing flow to the OTSG before this requirement is met. This is important because, if it is determined that an OTSG is available, then the branching in this step bypasses the instructions for establishing HPI cooling.

This step differs from the GEOG step in that it requires that the OTSG have integrity and not be isolated for TRACC before the transition is made to instructions for feeding the OTSG and establishing heat transfer. An OTSG that has been isolated for TRACC is not available because it has been isolated and level may be above the point where water enters the steam lines. An OTSG that does not have integrity is not available because the leak makes heat transfer hard to control and may endanger personnel or plant equipment.

REFERENCES: FSAR Sections 10.1, 10.2, 10.6

---

64. BW/E05EK1.2 001/1/1/RO#64/C/A 4.0/4.2/BANK/R/CR03701/5-094-001
The plant is in Mode 3. A reactor trip occurred from 100% power. The plant had been at 100% power for the last 150 days. EOP-2, Vital System Status Verification, immediate actions are complete and verified. The following plant conditions exist:

- Reactor Coolant (RCS) pressure is 1912 psig.
- SPDS indicates green +93 subcooling margin and subcooling margin is rising.
- Pressurizer level is 33 inches.
- "A" OTSG pressure is 890 psig.
- "B" OTSG pressure is 1029 psig.
- RM-A12 reads 5000 cpm.
- ARP-1B is in service
- Letdown flow is 70 gpm.
- Flow through MUV-31 is 95 gpm.
- Tincore has dropped from 555° F to 536° F in 5 minutes.

Which of the following transitions should be made, if any?

A. None, remain in EOP-2.

B. EOP-6, Steam Generator Tube Rupture.

C.✓ EOP-5, Excessive Heat Transfer.

D. EOP-4, Inadequate Heat Transfer

Reasons:

A. Excessive heat transfer is in progress, EOP-5 has the higher priority.

B. While OTSG tube leakage is > 1 gpm, EOP-5 would be applicable since the overcooling event is the higher priority symptom.

C. Correct. The parameters indicate that excessive heat transfer is in progress.

D. Plausible because 'B' OTSG pressure is higher than normal, but the actual symptom (based on Tincore change) is excessive heat transfer.

OPS 5-94, Obj. 1; EOP-5 Section 1.0; AI-505 Sections 3.1.4 & 4.1.2

RO - Bank

Reference(s) provided: RM-A12 Conversion Table (Simulator Version)

4.1.2 **Guidelines for Emergency Operating Procedures** [NOCS 008660]

1. The PROCEDURE DIRECTOR is expected to proceed through the EOP without unnecessary delay.

2. The reactor must be shutdown prior to entering any EOP except EOP-02, EOP-06, or EOP-12.

   a. If CRD breakers were initially closed, EOP-02 Immediate Actions are completed prior to symptom mitigation. This action ENSURES the highest priority of reactivity control is completed prior to symptom mitigation.

3. Priority of Symptoms: [NOCS 100305]

   a. EOPs are used to mitigate symptoms resulting from an upset in-plant parameters. Symptoms are treated in the following order:

      - Reactivity Control (EOP-02 Immediate Actions)
      - Inadequate Subcooling Margin (EOP-03)
      - Upset in Heat Transfer (EOP-04, or EOP-05)
        - Inadequate and excessive heat transfer are mutually exclusive.
        - If inadequate heat transfer exists following the termination of excessive heat transfer, then transition to EOP-04.
        - If excessive heat transfer exists following the termination of inadequate heat transfer, then transition to EOP-05.
      - Steam Generator Tube Rupture (EOP-06)

4. If an AP entry condition is met during performance of an EOP, the PROCEDURE DIRECTOR performs the following:

   - Remains focused on the EOP performance.
   - Immediately enter AP-880 (if applicable) using available personnel
   - Determine operator availability to perform the APs, unless explicitly prohibited by the governing EOP.
   - Direct a CONTROL BOARD OPERATOR to concurrently perform the actions of APs while an EOP is in progress.
     - Under these conditions, the operator performing the AP coordinates control board activities with the PROCEDURE DIRECTOR and other CONTROL BOARD OPERATORS.

3.0 PERSONNEL INDOCTRINATION

3.1 Definitions

3.1.1 **ABNORMAL EVENT -** Transient plant operation requiring the use of Abnormal Procedures (AP).

3.1.2 **CONCURRENCE -** Obtaining permission to perform an action before initiating the action.

3.1.3 **EMERGENCY EVENT -** Transient plant operation requiring the use of Emergency Operating Procedures (EOP).

3.1.4 **EXCESSIVE HEAT TRANSFER (EHT) –** Primary to secondary heat transfer causing an RCS cooldown rate > ITS limits.

3.1.5 **ENSURE -** Evaluate conditions and, if the condition does not exist, take the necessary actions to establish the condition.

3.1.6 **EVENT PROCEDURE -** Consists of either Abnormal Procedures (AP) or Emergency Operating Procedures (EOP).

3.1.7 **FULL HPI –** The conditions necessary to ensure ≥ the minimum required HPI flow assumed in the plant design basis.
These conditions include: at least 1 MUP running with HPI flow through all 4 HPI nozzles (all 4 HPI valves open, or HPI crossties open with 1 train of HPI valves open) with one of the following:

- HPI recirc to sump, MUP recirc, MU flowpath to the RCS, and RCP seal injection flowpaths isolated.
- Total HPI flow is in the "Acceptable Region" of the "Minimum Required HPI Flow" figure.

3.1.8 **HPI COOLING –** A method of core heat removal that relies on HPI injection flow and a RCS leak path. HPI-PORV cooling, HPI Safety cooling, and HPI-RCS Leak cooling are forms of HPI Cooling.

3.1.9 **NORMAL MAKEUP CAPABILITY -** Flow from 1 makeup pump through MUV-31, with recirc valves open and normal letdown isolated.

3.1.10 **NORMAL OPERATION -** Plant conditions where Operating and Annunciator Response Procedures apply.

3.1.11 **NOTIFY -** Inform an individual or group.

3.1.12 **OTSG HEAT TRANSFER –** The minimum requirements necessary to meet the function of having primary to secondary cooling available which are: at least 1 OTSG available (secondary integrity or SAFE STEAMING PATH) with a feedwater source available, and not isolated for TRACC.

EXCESSIVE HEAT TRANSFER

1.0 ENTRY CONDITIONS

IF in one of the following modes:

- Mode 3
- Mode 4

AND excessive primary to secondary heat transfer exists,

THEN use this procedure.

2.0 IMMEDIATE ACTIONS

NOTE
There are no immediate actions for this procedure.

RM-A12 Conversion Table

Simulator Version

NOTE: This aid for use when ARP-1B is running by itself

RM-A12 count rate is in gross cpm. For low count rates (<200 cpm), the count rate should be derived from a 10 to 15 minute average of REDAS or PICS data.

Leakage = (Gross Count Rate - 30) x Conversion Factor

RM-A12 Background Counts (cpm)	**30**

RM-A12 Conversion Factor (gpd/cpm)	**0.40043**

RM-A12 Gross cpm	Leak Rate (gpd)
30	0.0
31	0.4
32	0.8
33	1.2
34	1.6
35	2.0
36	2.4
37	2.8
38	3.2
39	3.6
40	4.0
54	9.6
42	4.8
43	5.2
44	5.6
45	6.0
46	6.4
47	6.8
48	7.2
49	7.6
50	8.0
51	8.4
52	8.8
53	9.2
54	9.6
55	10.0
56	10.4
57	10.8
58	11.2
59	11.6
60	12.0
61	12.4
62	12.8
63	13.2
64	13.6
65	14.0
66	14.4
67	14.8
68	15.2
69	15.6
70	16.0
71	16.4
72	16.8
73	17.2
74	17.6
75	18.0

RM-A12 Gross cpm	Leak Rate (gpd)
76	18.4
77	18.8
78	19.2
79	19.6
80	20.0
81	20.4
82	20.8
83	21.2
84	21.6
85	22.0
86	22.4
87	22.8
88	23.2
89	23.6
90	24.0
91	24.4
92	24.8
93	25.2
94	25.6
95	26.0
96	26.4
97	26.8
98	27.2
99	27.6
100	28.0
101	28.4
102	28.8
103	29.2
104	29.6
105	30.0
106	30.4
107	30.8
108	31.2
109	31.6
110	32.0
111	32.4
112	32.8
113	33.2
114	33.6
115	34.0
116	34.4
117	34.8
118	35.2
119	35.6
120	36.0
121	36.4

RM-A12 Gross cpm	Leak Rate (gpd)
122	36.8
123	37.2
124	37.6
125	38.0
126	38.4
127	38.8
128	39.2
129	39.6
130	40.0
131	40.4
132	40.8
133	41.2
134	41.6
135	42.0
136	42.4
137	42.8
138	43.2
139	43.6
140	44.0
141	44.4
142	44.8
143	45.2
144	45.6
145	46.0
146	46.4
147	46.9
148	47.3
149	47.7
150	48.1
151	48.5
152	48.9
153	49.3
154	49.7
155	50.1
156	50.5
157	50.9
158	51.3
159	51.7
160	52.1
161	52.5
162	52.9
163	53.3
164	53.7
165	54.1
166	54.5
167	54.9

RM-A12 Gross cpm	Leak Rate (gpd)
168	55.3
169	55.7
170	56.1
171	56.5
172	56.9
173	57.3
174	57.7
175	58.1
176	58.5
177	58.9
178	59.3
179	59.7
180	60.1
181	60.5
182	60.9
183	61.3
184	61.7
185	62.1
186	62.5
187	62.9
188	63.3
189	63.7
190	64.1
191	64.5
192	64.9
193	65.3
194	65.7
195	66.1
196	66.5
197	66.9
198	67.3
199	67.7
200	68.1
201	68.5
202	68.9
203	69.3
204	69.7
205	70.1
206	70.5
207	70.9
208	71.3
209	71.7
210	72.1
211	72.5
212	72.9
213	73.3

RM-A12 Conversion Table

Simulator Version

RM-A12 Gross cpm	Leak Rate (gpd)
214	73.7
215	74.1
220	76.1
225	78.1
230	80.1
235	82.1
240	84.1
245	86.1
250	88.1
255	90.1
260	92.1
265	94.1
270	96.1
275	98.1
280	100.1
285	102.1
290	104.1
295	106.1
300	108.1
305	110.1
310	112.1
315	114.1
320	116.1
325	118.1
330	120.1
335	122.1
340	124.1
345	126.1
350	128.1
355	130.1
360	132.1
365	134.1
370	136.1
375	138.1
380	140.2
385	142.2
390	144.2
395	146.2
400	148.2
405	150.2
410	152.2
415	154.2
420	156.2
425	158.2
430	160.2
435	162.2
440	164.2

RM-A12 Gross cpm	Leak Rate (gpd)
445	166.2
450	168.2
460	172.2
470	176.2
480	180.2
490	184.2
500	188.2
510	192.2
520	196.2
530	200.2
540	204.2
550	208.2
560	212.2
570	216.2
580	220.2
590	224.2
600	228.2
610	232.2
620	236.3
630	240.3
640	244.3
650	248.3
660	252.3
670	256.3
680	260.3
690	264.3
700	268.3
710	272.3
720	276.3
730	280.3
740	284.3
750	288.3
760	292.3
770	296.3
780	300.3
790	304.3
800	308.3
810	312.3
820	316.3
830	320.3
840	324.3
850	328.4
860	332.4
870	336.4
880	340.4
890	344.4
900	348.4

RM-A12 Gross cpm	Leak Rate (gpd)
910	352.4
920	356.4
930	360.4
940	364.4
950	368.4
960	372.4
970	376.4
980	380.4
990	384.4
1000	388.4
1010	392.4
1020	396.4
1030	400.4
1040	404.4
1050	408.4
1060	412.4
1070	416.4
1080	420.5
1090	424.5
1100	428.5
1110	432.5
1120	436.5
1130	440.5
1140	444.5
1150	448.5
1160	452.5
1170	456.5
1180	460.5
1190	464.5
1200	468.5
1210	472.5
1220	476.5
1230	480.5
1240	484.5
1250	488.5
1260	492.5
1270	496.5
1280	500.5
1290	504.5
1300	508.5
1310	512.6
1320	516.6
1330	520.6
1340	524.6
1350	528.6
1360	532.6
1370	536.6

RM-A12 Gross cpm	Leak Rate (gpd)
1380	540.6
1390	544.6
1400	548.6
1410	552.6
1420	556.6
1430	560.6
1440	564.6
1450	568.6
1460	572.6
1470	576.6
1480	580.6
1490	584.6
1500	588.6
1510	592.6
1520	596.6
1530	600.6
1540	604.6
1550	608.7
1560	612.7
1570	616.7
1580	620.7
1590	624.7
1600	628.7
1610	632.7
1620	636.7
1630	640.7
1640	644.7
1650	648.7
1660	652.7
1670	656.7
1680	660.7
1690	664.7
1700	668.7
1710	672.7
1720	676.7
1730	680.7
1740	684.7
1750	688.7
1760	692.7
1770	696.7
1780	700.8
1790	704.8
1800	708.8
1810	712.8
1820	716.8
1830	720.8
1840	724.8

RM-A12 Conversion Table

Simulator Version

RM-A12 Gross cpm	Leak Rate (gpd)
1850	728.8
1860	732.8
1870	736.8
1880	740.8
1890	744.8
1900	748.8
1910	752.8
1920	756.8
1930	760.8
1940	764.8
1950	768.8
1960	772.8
1970	776.8
1980	780.8
1990	784.8
2000	788.8
2010	792.9
2020	796.9
2030	800.9
2040	804.9
2050	808.9
2060	812.9
2070	816.9
2080	820.9
2090	824.9
2100	828.9
2110	832.9
2120	836.9
2130	840.9
2140	844.9
2150	848.9
2160	852.9
2170	856.9
2180	860.9
2190	864.9
2200	868.9
2210	872.9
2220	876.9
2230	880.9
2240	885.0
2250	889.0
2260	893.0
2270	897.0
2280	901.0
2290	905.0
2300	909.0

RM-A12 Gross cpm	Leak Rate (gpd)
2310	913.0
2320	917.0
2330	921.0
2340	925.0
2350	929.0
2360	933.0
2370	937.0
2380	941.0
2390	945.0
2400	949.0
2410	953.0
2420	957.0
2430	961.0
2440	965.0
2450	969.0
2460	973.0
2470	977.0
2480	981.1
2490	985.1
2500	989.1
2510	993.1
2520	997.1
2530	1001.1
2540	1005.1
2550	1009.1
2560	1013.1
2570	1017.1
2580	1021.1
2590	1025.1
2600	1029.1
2610	1033.1
2620	1037.1
2630	1041.1
2640	1045.1
2650	1049.1
2660	1053.1
2670	1057.1
2680	1061.1
2690	1065.1
2700	1069.1
2710	1073.2
2720	1077.2
2730	1081.2
2740	1085.2
2750	1089.2
2800	1109.2

RM-A12 Gross cpm	Leak Rate (gpd)
2850	1129.2
2900	1149.2
2950	1169.3
3000	1189.3
3050	1209.3
3100	1229.3
3150	1249.3
3200	1269.4
3250	1289.4
3300	1309.4
3350	1329.4
3400	1349.4
3450	1369.5
3500	1389.5
3550	1409.5
3600	1429.5
3650	1449.6
3700	1469.6
3750	1489.6
3800	1509.6
3850	1529.6
3900	1549.7
3950	1569.7
4000	1589.7
4050	1609.7
4100	1629.8
4150	1649.8
4200	1669.8
4250	1689.8
4300	1709.8
4350	1729.9
4400	1749.9
4450	1769.9
4500	1789.9
4550	1809.9
4600	1830.0
4650	1850.0
4700	1870.0
4750	1890.0
4800	1910.1
4850	1930.1
4900	1950.1
4950	1970.1
5000	1990.1
5050	2010.2
5100	2030.2

RM-A12 Gross cpm	Leak Rate (gpd)
5150	2050.2
5200	2070.2
5250	2090.2
5300	2110.3
5350	2130.3
5400	2150.3
5450	2170.3
5500	2190.4
5550	2210.4
5600	2230.4
5650	2250.4
5700	2270.4
5750	2290.5
5800	2310.5
5850	2330.5
5900	2350.5
5950	2370.5
6000	2390.6
6050	2410.6
6100	2430.6
6150	2450.6
6200	2470.7
6250	2490.7
6300	2510.7
6350	2530.7
6400	2550.7
6450	2570.8
6500	2590.8
6550	2610.8
6600	2630.8
6650	2650.8
6700	2670.9
6750	2690.9
6800	2710.9
6850	2730.9
6900	2751.0
6950	2771.0
7000	2791.0
7050	2811.0
7100	2831.0
7150	2851.1
7200	2871.1
7250	2891.1
7300	2911.1
7350	2931.1
7400	2951.2

RM-A12 Conversion Table

Simulator Version

RM-A12 Gross cpm	Leak Rate (gpd)
7450	2971
7500	2991
7550	3011
7600	3031
7650	3051
7700	3071
7750	3091
7800	3111
7850	3131
7900	3151
7950	3171
8000	3191
8050	3211
8100	3231
8150	3251
8200	3272
8250	3292
8300	3312
8350	3332
8400	3352
8450	3372
8500	3392
8550	3412
8600	3432
8650	3452
8700	3472
8750	3492
8800	3512
8850	3532
8900	3552
8950	3572
9000	3592
9050	3612
9100	3632
9150	3652
9200	3672
9250	3692
9300	3712
9350	3732
9400	3752
9450	3772
9500	3792
9550	3812
9600	3832
9650	3852
9700	3872

RM-A12 Gross cpm	Leak Rate (gpd)
9800	3912
9900	3952
10000	3992
10100	4032
10200	4072
10300	4112
10400	4152
10500	4193
10600	4233
10700	4273
10800	4313
10900	4353
11000	4393
11100	4433
11200	4473
11300	4513
11400	4553
11500	4593
11600	4633
11700	4673
11800	4713
11900	4753
12000	4793
12100	4833
12200	4873
12300	4913
12400	4953
12500	4993
12600	5033
12700	5073
12800	5113
12900	5154
13000	5194
13100	5234
13200	5274
13300	5314
13400	5354
13500	5394
13600	5434
13700	5474
13800	5514
13900	5554
14000	5594
14100	5634
14200	5674
14300	5714

RM-A12 Gross cpm	Leak Rate (gpd)
14400	5754
14500	5794
14600	5834
14700	5874
14800	5914
14900	5954
15000	5994
15100	6034
15200	6075
15300	6115
15400	6155
15500	6195
15600	6235
15700	6275
15800	6315
15900	6355
16000	6395
16100	6435
16200	6475
16300	6515
16400	6555
16500	6595
16600	6635
16700	6675
16800	6715
16900	6755
17000	6795
17100	6835
17200	6875
17300	6915
17400	6955
17500	6996
17600	7036
17700	7076
17800	7116
17900	7156
18000	7196
18100	7236
18200	7276
18300	7316
18400	7356
18500	7396
18600	7436
18700	7476
18800	7516
18900	7556

RM-A12 Gross cpm	Leak Rate (gpd)
19000	7596
19200	7676
19400	7756
19600	7836
19800	7917
20000	7997
20200	8077
20400	8157
20600	8237
20800	8317
21000	8397
21200	8477
21400	8557
21600	8637
21800	8717
22000	8797
22200	8878
22400	8958
22600	9038
22800	9118
23000	9198
23200	9278
23400	9358
23600	9438
23800	9518
24000	9598
24200	9678
24400	9758
24600	9839
24800	9919
25000	9999
25200	10079
25400	10159
25600	10239
25800	10319
26000	10399
26200	10479
26400	10559
26600	10639
26800	10720
27000	10800
27200	10880
27400	10960
27600	11040
27800	11120
28000	11200

RM-A12 Conversion Table

Simulator Version

RM-A12 Gross cpm	Leak Rate (gpd)
28500	11400
29000	11600
29500	11801
30000	12001
30500	12201
31000	12401
31500	12602
32000	12802
32500	13002
33000	13202
33500	13402
34000	13603
34500	13803
35000	14003
35500	14203
36000	14403
36500	14604
37000	14804
37500	15004
38000	15204
38500	15405
39000	15605
39500	15805
40000	16005
40500	16205
41000	16406
41500	16606
42000	16806
42500	17006
43000	17206
43500	17407
44000	17607
44500	17807
45000	18007
45500	18208
46000	18408
46500	18608
47000	18808
47500	19008
48000	19209
48500	19409
49000	19609
49500	19809
50000	20009
50500	20210
51000	20410

RM-A12 Gross cpm	Leak Rate (gpd)
51000	20410
51500	20610
52000	20810
52500	21011
53000	21211
53500	21411
54000	21611
54500	21811
55000	22012
55500	22212
56000	22412
56500	22612
57000	22812
57500	23013
58000	23213
58500	23413
59000	23613
59500	23814
60000	24014
60500	24214
61000	24414
61500	24614
62000	24815
62500	25015
63000	25215
63500	25415
64000	25616
64500	25816
65000	26016
65500	26216
66000	26416
66500	26617
67000	26817
67500	27017
68000	27217
68500	27417
69000	27618
69500	27818
70000	28018
70500	28218
71000	28419
71500	28619
72000	28819
72500	29019
73000	29219
73500	29420

RM-A12 Gross cpm	Leak Rate (gpd)
74000	29620
74500	29820
75000	30020
75500	30220
76000	30421
76500	30621
77000	30821
77500	31021
78000	31222
78500	31422
79000	31622
79500	31822
80000	32022
80500	32223
81000	32423
81500	32623
82000	32823
82500	33023
83000	33224
83500	33424
84000	33624
84500	33824
85000	34025
85500	34225
86000	34425
86500	34625
87000	34825
87500	35026
88000	35226
88500	35426
89000	35626
89500	35826
90000	36027
90500	36227
91000	36427
91500	36627
92000	36828
92500	37028
93000	37228
93500	37428
94000	37628
94500	37829
95000	38029
95500	38229
96000	38429
96500	38629

RM-A12 Gross cpm	Leak Rate (gpd)
97000	38830
97500	39030
98000	39230
98500	39430
99000	39631
99500	39831
100000	40031
100500	40231
101000	40431
101500	40632
102000	40832
102500	41032
103000	41232
103500	41432
104000	41633
104500	41833
105000	42033
105500	42233
106000	42434
106500	42634
107000	42834
107500	43034
108000	43234
108500	43435
109000	43635
109500	43835
110000	44035
110500	44236
111000	44436
111500	44636
112000	44836
112500	45036
113000	45237
113500	45437
114000	45637
114500	45837
115000	46037
115500	46238
116000	46438
116500	46638
117000	46838
117500	47039
118000	47239
118500	47439
119000	47639
119500	47839

Originator Signature _____ _____ Date

.ependent Review _____ _____ Date

SSO Approval _____ _____ Date

65. BW/E09EK3.1 001/1/2/RO#65/MEM 3.2/3.4/BANK/R/CR03701/5-098-002
EOP-09, Natural Circulation Cooldown, contains a table which provides limits on natural circulation cooldown rates.

For RCS pressure maintained above the Natural Circulation curve of Figure 1 & 2 in the EOP, the cooldown rate limit is ≤ 25° F per 1/2 hour.

Which ONE of the following describes the basis for this limit?

A. To limit thermal stress on the OTSG tubesheet.

B.✔ To limit voiding in the reactor vessel head region.

C. To maintain a stable or lowering core ΔT.

D. To conserve EFT-2 inventory.

Reasons:

A. Plausible since tube to shell limits can be of concern. However, these are addressed by the data in Table 3.

B. Correct. See discussion below.

C. Plausible since this is an indication natural circulation is in progress but not a reason for the cooldown limit.

D. Plausible since a minimum cooldown rate (2.5° F per 1/2 hour) is specified if secondary makeup is not available. However, this is not the case specified in this question.

The referenced table includes different cooldown rate requirements depending on whether RCS pressure is being maintained above or below the Nat Circ Curve shown on Figure 1 and Figure 2. The difference is based on analysis of reactor head cooldown rate. If pressure is being maintained above the Nat Circ Curve then further void formation is not expected with a cooldown rate of 25 deg F/half hour. If pressure is below the Nat Circ Curve, then cooldown rate must be limited to prevent further head voiding. Head voiding is not expected to cause loss of natural circulation, however, the operators should be aware of and deal with the condition.

OPS 5-98, Obj. 3; EOP-TBD cross-step document for EOP-9; ESBD-01; EOP-9 Table 2

RO - Bank

Reference(s) provided: None

Table 1:
Required OTSG levels

"LLL"	> 20 in	≥ 1 RCP running with adequate SCM
"NAT CIRC"	> 70%	No RCPs running with adequate SCM
"ISCM"	> 90%	Inadequate SCM

Table 2:
Nat Circ cooldown rate limits

RCS Tincore	Cooldown limit
RCS PRESS maintained above Nat Circ curve of Figure 1 and Figure 2	≤ 25°F/½ hr
RCS TEMP > 150°F and RCS PRESS below Nat Circ curve of Figure 1 and Figure 2	≤ 5°F/½ hr

Table 3:
OTSG Tube to Shell ΔT Limits

Tensile ΔT Limit (Avg Tshell – Tcold)					≤ 100°F
Compressive ΔT Limit (Thot – Avg Tshell)					≤ 60°F
A OTSG	A730	A731	A732	A733	A734
Tshell	Avg = R771				
B OTSG	A735	A736	A737	A738	A739
Tshell	Avg = R772				

EOP Step: Table 1
TBD Step: None **Section:** None **Deviation Type:** Add
Generic Deviation: None
Justification:

Required OTSG level table adds information that is referenced within the body of the procedure

Step Basis:

Table 1 defines the required OTSG levels that are need for situation when ≥ 1 RCP(s) operating, no RCP operating and Inadequate SCN exists.

Setpoint Code:	SG01	**Setpoint Value**:	>90% OTSG High Range Level
:	SG02	:	>70% OTSG High Range Level
:	SG22		LLL (>20) Inches OTSG Level (Low Level Limit)

References: I-93-0002 'EFIC S/G Level Instrumentation Loop String Accuracy and Setpoints"

EOP Step: Table 2
TBD Step: None **Section:** None **Deviation Type:** Add
Generic Deviation: None
Justification:

Cooldown rate limit table adds information that is referenced within the body of the procedure

Step Basis:

The cooldown limits, as specified in the Pressure Temperature Limit Report (PTLR) are applicable for forced and natural circulation without a reactor vessel head void. Per the TBD, if a head void does form, cooldown must be maintained to less than or equal to 50 ° F/hr. The TBD also defines conditions when emergency cooldown rate should be used during a SGTR to cooldown to 500°F to prevent lifting the MSSV.

Setpoint Code: RC014 **Setpoint Value**: No RCP Running:
> NAT CIRC CURVE cooldown at ≤ 25 °F/ ½ hr
< NAT CIRC CURVE cooldown at ≤ 5 °F/ ½ hr

References:

1. Calc F97-0013, Pressure/Temperature Limits Report

EOP Step: Table 3
TBD Step: None **Section:** None **Deviation Type:** None
Generic Deviation: None
Justification:

OTSG Tube to shell ΔT limit table adds information that is referenced within the body of the procedure

Step Basis:

Temperature differentials between the OTSG shell and tubes develop thermal stresses on the OTSG tubes. The table defines the maximum allowable compressive and tensile limits for the OTSG. Also the table shows the computer points for the Tshell thermocouples and defines the formula to calculate the tensile and compressive limits.

Setpoint Code:	SG05	**Setpoint Value**:	≤ 100 °F
	SG33		≤ 60 °F

References: None

ENCLOSURE 1

ESBD-01
EOP SETPOINT BASES DOCUMENT
REVIEW AND APPROVAL DOCUMENTATION

SETPOINT CODE: RC014

REV: 1

TITLE: NATURAL CIRCULATION COOLDOWN LIMITS WHEN IN A NON-EMERGENCY CONDITION

ORIGINATED BY:

Kenneth C. Rass / 7-12-1999

Name/Date

ENGINEERING REVIEW

Systems Engineering (SE):

M. J. Fitzgerald 7-15-1999

Name/Date

Design Engineering (DE):

T. V. Austin / 8-7-1999

Name/Date

APPROVAL BY MNPO:

D. Porter for M. Annacone / 10-29-1999

Name/Date

SETPOINT BASES SECTION

SETPOINT CODE: RC014 **REVISION** 1 **REVISION DATE:** 7/12/99

SETPOINT: NO RCP RUNNING:(<=25 ° F/half hr @ RC PRESS > NAT CIRC CURVE> 150 ° F(<=5 ° F/half hr @ RC PRESS < NAT CIRC CURVE >150 ° F RCS TEMP

RCS COOLDOWN RATE

NATURAL CIRCULATION COOLDOWN LIMITS WHEN IN A NON-EMERGENCY CONDITION

PURPOSE: To define the limitations for natural circulation cooldown when in Non-Emergency Condition (EOP-09). These limits will reduce the probability of forming a steam void in the reactor vessel head region, which could lead to complication during the natural circulation cooldown process.

BASIS:

Head voids can form during natural circulation conditions due to the lack of adequate flow and mixing in the head region. The RV head fluid remains stagnant and does not communicate with the rest of the RCS. Generic letter 81-21 identified the concern of drawing a void in the reactor vessel head during natural circulation. Part of the response to the GL, was to demonstrate that a controlled natural circulation cooldown would not result in reactor vessel voiding. TMI-1 performed some analysis and the results were documented in Topical Report 017, "Natural Circulation Cooldown Analysis Without Vessel Upper Head Void Formation". The analysis shows that if the RCS pressure is maintained outside of the natural circulation curve (above and to the left), a cooldown of 25 ° F / 1/2 hr or less will decrease the chance of voiding in the head. The lower the cooldown rate the less likely a void will form. Inside the natural circulation curve and above the saturation curve, the analysis showed a cooldown of 5 ° F / 1/2 hr will minimize the chance of voiding in the reactor vessel head region. The analysis took the RCS down to 204 ° F and 134.5 psig and this is why the natural circulation curve is straight at this point. The formation of a void in the reactor vessel head region during natural circulation cooldown is not a safety concern, but just needs to be recognized and controlled. If a void does form, maintaining cooldown less than 25 ° F / 1/2 hr will prevent the RV head stresses from exceeding the design stress limits.

When in EOP-09, the GPUN analysis maximum cooldown rates of 5° F/1/2 hr and 25° F/1/2 hr will be the cooldown restraints. The 5° F/1/2 hr is applicable when operating between the ASCM curve and Natural Circulation Curve. The Natural Circulation Curve is equivalent to the 25° F/1/2 hr cooldown boundary limits. The 25° F/1/2 hr is applicable when operating between the Natural Circulation Curve and the NDT Curve. These cooldown limits are applicable when the RCS temperature is above 150° F. When the RCS temperature is below 150° F the PTLR of 5° F/ 1/2 hr is more restrictive and is used.

For condition outside EOP-09 the PTLR limitation will apply if a head void has not formed. If a RX vessel head void forms the cooldown limit is reduced to 25 ° F/ 1/2 hr.

The cooldown limits are a comparison of temperatures over time, therefore the errors associated with the differences will cancel each other out. The natural circulation curve is a transition boundary between > 5 ° F/ 1/2 hr and < 5 ° F/ 1/2 hr cooldown limits. This boundary does not affect any safety parameters and just reduces the potential of forming a void in the reactor vessel head. The curve is not required to take into account the existing accuracy of the RCS temperature and pressure instrumentation. Instrument uncertainty is not factored into these values.

SETPOINT BASES SECTION

SETPOINT CODE: RC014 **REVISION** 1 **REVISION DATE:** 7/12/99

HISTORY:

The cooldown limit for RCS temperatures between 280 - 150° F was changed from 2.5 degree/ 1/2 hr to 25 deg/1/2 hr (outside the natural circulation curve) and 5° F/1/2 hr (inside the natural circulation curve). The original bases for the 2.5° F / 1/2 hr could not be found (Ref. OP96-0073 and NL96-0049).

The original natural cooldown limits were added to procedure AP-530, "Natural Circulation", Rev 0 to comply with Generic Letter 81-21. These limits were 10° F/hr (RCS greater than equal to 280 degrees), 5° F/hr (RCS between 280 to 150 degrees) and 2.5° F /hr (RCS less than equal to 150 degree). AP-530 Rev. 6 added the 50° F/hr outside the natural circulation cooldown curve. In response to several question from the NRC about the natural circulation cooldown method, G. R. Westafer response states that AP-530 Rev. 0 "could not be demonstrated that the use of this procedure will not result in upper head voiding". The 2.5 ° F /hr was deleted from AP-530, when it stopped addressing RCS temperatures below 150° F.

PC99-0428 was written to have licensing evaluate the requirements for GL 81-21 and the restrictions for cooldown rate. The response to the PC stated that the cooldown limitation for GL 81-21 did not apply to emergency situation (i.e SGTR, LOCA, Inadequate Heat transfer, Inadequate Core Cooling and Excessive Heat Transfer). For these situation the normal ITS limits apply. If a head void does form, the cooldown must be reduced to 25° F/1/2 hr to limit the stress on the RX head. (Ref. Setpoint code RC105)

REFERENCES:

Letter from G.R. Westafer (FPC) to John F. Stolz (NRC), dated 07/28/83, "Generic Letter No. 81-21-Natural Circulation Cooldown", (Doc View 99011-0948)

B&W Document 74-1152414-08, Emergency Operating Procedures Technical Bases Document, Vol 2 section IV.NC, Vol 3 III G 3.3 and 3.7

Generic Letter 81-21, "Natural Circulation Cooldown", (Doc View 00377-0197)

Letter from P.Y. Baynard (FPC) to John F. Stolz (NRC), dated 05/23/84, "Generic Letter 81-21, Natural Circulation Cooldown", (Doc View 99011-9575)

Letter from John F. Stolz (NRC) to Walter S. Wilgus (FPC) , dated 6/6/86, "Safety Evaluation Report on Generic Letter 81-21", (SEEK= 3644-0433)

Letter from NRC to all holders of operating Licenses, dated 3/6/92, "Unanalyzed reactor vessel (PWR) Thermal Stress During natural Convection Cooldown" , Generic Letter 92-02, (SEEK=6604-2178)

Letter from E. C. Simpson (FPC) to John F. Stolz (NRC), dated 12/20/85, "Response To NRC Generic Letter 81-21 Natural Circulation Cooldown), (SEEK=3385-1805)

Pressure/Temperature Limits Report, Rev. 0 (historical information)

IOC from Brain Gutherman to Kenneth Rass, " Natural Circulation Cooldown Head Void Prevention", NL96-0049, dated 3/28/96

IOC from Kenneth C Rass to B. Gutherman, "Natural Circulation Cooldown Requirements", OP96-0073, dated 6/20/96

PC 97-3877, "Amount of Water to Support A Natural Circulation Cooldown"

Letter from L.M. Lesniak (FTI) to G. Nyberg (FPC), "Natural Circulation Cooldown Requirements", dated 7/14/97, INS 97-2783

PC 99-0428, Licensing question on GL 81-21 requirements

Letter from Harley Silver (NRC) to Percy M. Beard (FPC), dated 2/7/91, "Issuance of Amendment RE: Pressure/Temperature Curves"

Letter from Harley Silver (NRC) to Walter S. Wilgus (FPC), dated 9/23/85, "Amendment 82", (SEEK 3255-0556)

INSTRUMENTS USED:

RC-171-TR, RC-172-TR (Tincore) [RG 1.97]

Clock

RC-158-PI2, RC-158-PIR, or RC-159-PI2 [RG 1.97]

3.0 FOLLOW-UP ACTIONS (CONT'D)

ACTIONS	DETAILS
3.28 ___ IF at any time, indications of head voiding exist, THEN ensure RCS cooldown rate is ≤ 25°F/½ hr. See Table 2	• Head void indications: ___ Sudden rise in PZR level. ___ Sudden lowering of Rx Vessel level indication. ___ PZR level rise not consistent with changes in RCS makeup or temperature. • ___ Adjust TBVs (preferred) or ADVs to achieve applicable cooldown rate.
3.29 ___ Maintain Tube to Shell ΔT within limits. See Table 3	• ___ IF tensile limit is approached, THEN stabilize RCS TEMP. _____ - _____ = _____ Avg T_{shell} T_{cold} ΔT • ___ IF compressive limit is approached, THEN lower RCS TEMP using TBVs (preferred) or ADVs without exceeding cooldown limits. _____ - _____ = _____ T_{hot} Avg T_{shell} ΔT See Table 2 • ___ IF any OTSG shell instrument is NOT available, THEN notify TSC.

EOP-TBD Cross-Step Document
EOP-09, Natural Circulation Cooldown

EOP Step: 3.28

TBD Step: None **Section:** None **Deviation Type:** Add

Generic Deviation: None

Justification:

The GEOG does not have a specific cooldown section for Natural Circulation Cooldown. Refer to justification for Step 1.0..

Step Basis:

This step provides instructions for responding to RCS head voids. The details require that RCS cooldown rates be maintained within limits. Although these limits are the same as those already referred to, awareness of the potential of head voids to form is important. The "normal" limitations are restated here to ensure that if head voids have occurred, the user checks that the limits have been maintained.

The referenced table includes different cooldown rate requirements depending on whether RCS pressure is being maintained above or below the Nat Circ Curve shown on Figure 1 and Figure 2. The difference is based on analysis of reactor head cooldown rate. If pressure is being maintained above the Nat Circ Curve then further void formation is not expected with a cooldown rate of 25 deg F/half hour. If pressure is below the Nat Circ Curve, then cooldown rate must be limited to prevent further head voiding. Head voiding is not expected to cause loss of natural circulation, however, the operators should be aware of and deal with the condition.

The following are system parameters that can give indication of head voiding:

- Sudden rise in pressure level due the placement of the water resulting in the development of the RCS head bubble.
- Sudden lowering of reactor vessel level indication.
- Pressurizer level rise that is not consistent with changes in RCS temperature and/or RCS makeup.

Setpoint Code: RC105 **Setpoint Value**: ≤ 25° F/ ½ hr RCS Cooldown

References:

1. FPC Interoffice correspondence NL96-0049 and OP96-0073
2. Generic Letter 81-21, "Natural Circulation Cooldown", (Doc View 00377-0197)
3. Letter from G.R. Westafer (FPC) to John F. Stolz (NRC), dated 07/28/83, "Generic Letter No. 81-21-Natural Circulation Cooldown", (Doc View 99011-0948)
4. Letter from P.Y. Baynard (FPC) to John F. Stolz (NRC), dated 05/23/84, "Generic Letter 81-21, Natural Circulation Cooldown", (Doc View 99011-9575)
5. Letter from E. C. Simpson (FPC) to John F. Stolz (NRC), dated 12/20/85, "Response To NRC Generic Letter 81-21 Natural Circulation Cooldown), 3F1285-12 (SEEK=3385-1805)
6. Letter from John F. Stolz (NRC) to Walter S. Wilgus (FPC) , dated 6/6/86, "Safety Evaluation Report on Generic Letter 81-21", (SEEK= 3644-0433)
7. Letter from NRC to all holders of operating Licenses, dated 3/6/92, "Unanalyzed reactor vessel (PWR) Thermal Stress During natural Convection Cooldown" , Generic Letter 92-02, (SEEK=6604-2178)

66. G2.1.16 001/GENERIC/1/RO#66/MEM 2.9/2.8/BANK/R/CR03701/4-092-001
A step in AP-880, Fire Protection, directs the operator to maintain plant communications using Plant Line 1 and portable radios. Which ONE of the following describes the reason Plant Line 1 is used and how it can be accessed?

A.✔ Plant Line 1 is the dedicated emergency line and can be accessed from the 4 Digit Telephone System by dialing 12.

B. Plant Line 1 is the dedicated emergency line and can be accessed from the 4 Digit Telephone System by dialing 5555.

C. Plant Line 1 is the only line that services the entire plant and can be accessed from the 4 Digit Telephone System by dialing 12.

D. Plant Line 1 is the only line that services the entire plant and can be accessed from the 4 Digit Telephone System by selecting 5555.

Reasons:

A. Correct. Per OP-704 PL-1 is reserved for emergency communications during an emergency. OP-704 also directs dialing 12 to access PL-1.

B. Dialing 5555 will get the emergency phone in the control room only.

C. Plant Line 1, 2, PAX and the system all service the entire plant.

D. Plant Line 1, 2, PAX and the system all service the entire plant. Dialing 5555 will get the emergency phone in the control room only.

OPS 4-92, Obj. 2; OPS 4-92 Sections 1-4.0.I.8 & 1-4.0.J.6; OP-704 Step 4.2

RO - Bank

Reference(s) provided: None

8. The intra-plant communications system can be accessed from the four digit system as follows:

   a) Dial "11" for paging.

   b) Dial "12" for PL-1.

   c) Dial "14" for PL-2.

   d) Dial "71" for PAX.

      1) When a dial tone is received, dial the appropriate PAX number.

9. In the event of an emergency condition, dialing 5555 will ring a dedicated emergency phone in the Control Room.

10. The system can be used to activate personnel pager units or to contact any agency that cannot be reached using established emergency communications channels.

J. INTRA-PLANT COMMUNICATION SYSTEM

1. The intra plant communication system is used for transmitting alarms and information between personnel within CR-3.

2. The system consists of a network of phone stations and speakers located throughout the Control Complex, Turbine Building, Auxiliary Building, Containment Building, office buildings, Technical Support Center, and Intake Area.

   a) Each station consists of a phone handset, dial, ringer, and channel selector switch. At present, new pushbutton dial phone stations are being systematically installed that do not include a rotary selector switch.

3. The standard intra-plant phone station has the following four (4) channels.

   a) PAX (Private Automatic Exchange)

      1) The PAX system operates as a standard telephone system with calls routed through an automatic

4. Each phone station in the Intra-Plant Communication System will accept speech input to any one of the four channels.

5. PA Channel Operation:

   a) Most phones do not have access to the PA channel. For those that do have this capability, the speaker's voice is broadcast over the intra-plant communication speakers.

   b) Page can be accessed on the older stations by rotating the selector switch to the PA position or by selecting the PAX position and dialing 80. Use of the PA should be minimized to reduce plant background noise.

6. Party Line 1 and 2 (PL-1 and PL-2) Operation:

   a) The party line channels are used to establish communications between any number of PAX stations (any stations selected to that party line). The party line channels are separated from each other and allow conversation on each line to take place simultaneously without interference. Any operator who desires to hold a party line conversation with another operator must check the availability of the party lines, page the individual, and instruct them to come up on the selected party line.

      1) Party lines are selected by either rotating the selector switch to the desired line or by selecting the PAX position and dialing 81 for PL-1 or 82 for PL-2.

   b) During emergency conditions PL-1 is reserved for use by the Control Room and the Emergency Teams.

   c) During a shutdown from outside the Control Room (AP-990), Operations personnel will use PL-1 or UHF radios to communicate between vital areas.

7. PAX Operation:

   a) To establish communications using the PAX private line phone system, select the handset selector switch to PAX and dial the three-digit number for the desired PAX station.

4.2 Plant 4 Digit Phone (UTF) (Information)

ACTION	DETAILS

CAUTION

Emergency communication may be established with the Control Room by dialing 5555 or 311 on any UTF phone.

4.2.1	ESTABLISH communications using United Telephone of Florida (UTF) for Intra-plant use	• LIFT handset, LISTEN for dial tone, then DIAL four digit number of desired handset station (Intra-phone phone service)

NOTE

This operation has a short duration time for use, ~ 15 seconds.

NOTE

The use of the "PA" feature should be minimized to reduce plant background noise.

4.2.2	ESTABLISH communications using UTF for Page Call	1. DIAL 11 2. MAKE announcement
4.2.3	ESTABLISH communications using UTF for Party Line Access	• DIAL 12 to access PL-1 • DIAL 14 to access PL-2
4.2.4	ESTABLISH communications using UTF for PAX System Access	1. DIAL 71 to access PAX Stations 2. <u>WHEN</u> dial tone is received, <u>THEN</u> DIAL appropriate PAX number
4.2.5	ESTABLISH communications using UTF for access to Commercial Telephone System (LOCAL)	1. DIAL 9 and wait for dial tone 2. DIAL local 7-digit number
4.2.6	ESTABLISH communications using UTF for access to VoiceNet	1. DIAL 8 2. DIAL 7-digit VoiceNet number, (e.g. 770-2050 for NGG Help Desk)

3.0 PERSONNEL INDOCTRINATION

3.1 Setpoints

	DESCRIPTION	VALUE
3.1.1	Reactor Bldg Evacuation Alarm	• Steady Tone of 750 Hz
3.1.2	Site Evacuation Alarm	• Pulse Tone of 425 Hz at a rate of 4-5 Hz
3.1.3	Fire Alarm	• Wailing Siren Tone of 600 to 1450 Hz
3.1.4	Aux Bldg Evacuation Alarm	• Pulse Tone at ~ 1,000 Hz

3.2 Limits and Precautions

	LIMIT	BASIS
3.2.1	During an Emergency, PL-1 is reserved for emergency communications only	To ensure an open communications line during emergency conditions
3.2.2	CSP-NGGC-2600, Wireless Communications Equipment, and AI-412, Verbal Communication Standards, should be referenced when determining radio exclusion areas	Prohibit transmission from portable radios and cellular phones in areas where radio frequency interference may affect plant equipment

67. G2.1.32 001/GENERIC/1/RO#67/MEM 3.4/3.8/BANK/R/CR03701/4-087-002
A Limit and Precaution in OP-409, Plant Ventilation System, states that only one Chilled Water pump and one Control Complex chiller may run at a time. What is the basis for this statement?

Ensures:

A.✔ proper SW system flow balance.

B. proper CH system flow balance.

C. proper SC system flow balance.

D. a minimum heat load is available for the running chiller to prevent excessive cycling.

Reasons:

A. Correct. Step 3.2.1 of OP-409. SW flow is balanced for EDG calculations.

B. & C. CH and SC system flow is not balanced.

D. The hot gas recirc valve is used to prevent excessive cycling (surging) under low heat load conditions.

OPS 4-87, Obj. 5; OP-409 Step 3.2.1; OPS 4-87 Section 2-4.0.A.3

RO - Bank

Reference(s) provided: None

3.2 Limits and Precautions

	LIMIT	BASIS
3.2.1	Chilled Water Pumps and Chillers are under Administrative Control. ONLY one pump (CHP-1A/1B) and Chiller (CHHE-1A/1B) may run at a time	Ensures proper SW System flow balance
3.2.2	Feeder breaker should never be used to START/STOP a chiller. All starts and stops should be from local control panel	Ensures proper system operation by controlling functions locally
3.2.3	IF Upper Sightglass indicates full (lube oil), OR, IF Lower Sightglass indicates NOT full, THEN SHUTDOWN Unit	Proper lubrication of chiller unit This L&P may be waived for several days following chiller maintenance provided concurrence of maintenance and engineering are obtained.
3.2.4	NOTIFY Health Physics when Aux. Bldg. Ventilation System configuration is changed	
3.2.5	IF CHHE-2 trips off line due to a low inlet flow of 50 gpm, THEN ENSURE CHP-2 is STOPPED	Prevent Pump Damage
3.2.6	Maximum Switchgear Room Temp is 104°F	
3.2.7	Do not run purge unit unless purge unit oil level sightglass is full	To prevent purge unit damage
3.2.8	For work located in Radiation Controlled Areas, due consideration must be given to the ALARA program. This may result in a determination that special precautions and/or preparations are necessary	Personnel Protection

68. G2.2.13 001/GENERIC/2/RO#68/MEM 3.6/3.8/NEW/R/CR03701/
Which of the following represents a case where it is acceptable to manipulate a piece of equipment with a clearance tag on it per OPS-NGGC-1301, Equipment Clearance?

A. A PPO performing a startup checklist checks a valve that is tagged "OPEN".

B. The mechanic briefly opens a leaking boundary valve that is tagged "CLOSED" to flush the seat.

C. The SPO racks a tagged "OPEN & NOT RACKED IN" RCP breaker into the "Test" position.

D.✔ Two electricians remove a breaker on ES MCC 3A1 for PM that is tagged "OPEN & NOT RACKED IN"

Reasons:

A. Checking a valve open requires manipulating it slightly in the closed direction. The only person permitted to manipulate a valve to check its position is the clearance Independent Verifier.

B. A leaking valve can be torqued with WCC concurrence. Opening a valve to flush its seat would be unnacceptable.

C. This activity would be allowed only if a concurrent verification is performed while placing the breaker in test.

D. Correct. MCC and power panel breakers can be removed and installed as long as concurrent verification is performed while the breaker is installed.

OPI1301N, Obj. 4; OPS-NGGC-1301 Section 9.1.17

RO - New

Reference(s) provided: None

9.1 General Administration (Cont.)

9.1.16 Maintenance will be allowed on boundary isolation components provided that the work activity will not alter the ability of the boundary isolation component to perform its isolation function.

Examples of work activities that can be performed on boundary isolation devices are as follows:

- Limit switch grease inspection
- Flex conduit repairs
- Relugging of wire connections
- Electrical disconnect and reconnect of motor
- Limitorque grease inspection for rising stem and gate valves
- Anti-rotation device inspection
- Work on breakers

9.1.17 Clearance tagged or ground tagged equipment shall not be operated for any purpose while under clearance. The following are exceptions to this requirement:

1. Verification of required valve position by the clearance Independent Verifier.

2. Additional torquing of boundary valves to gain adequate isolation. If personnel determine that torquing of boundary valves is needed, the WCC must be notified. The WCC will determine how best to perform and to document the additional valve torquing.

3. Removal and installation of MCC or power panel breakers where the breaker remains open. Concurrent verification is required to verify the breaker is open prior to installation.

4. 6.9 kV, 4160 volt and 480 volt breakers may be pulled out of their cubicle or placed in test as required if the breaker is tagged as "Not Racked In". WCC SRO concurrence is required prior to starting jobs that require placing a breaker in the test position. Concurrent verification is required to place the breaker in the test position.

69. G2.2.28 001/GENERIC/2/RO#69/C/A 2.6/3.5/NEW/R/CR03701/

FP-203 "Defueling and Refueling Operations" contains a limit and precaution that states:

"Core reload/offload refueling patterns shall be arranged such that no more than one fuel assembly is in an uncoupled condition at any time during offload and reload of the fuel assemblies.

The definition of uncoupled is when a fuel assembly has no combination of face adjacent or diagonally adjacent loaded core fuel assembly locations back to closest core loaded fuel assembly locations in the area of the core region associated with a source range instrument."

Which ONE of the following choices represents an **unacceptable** assembly configuration [gray area=assembly loaded]?

A.

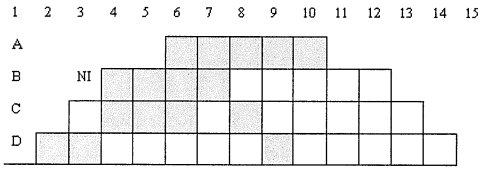

B.

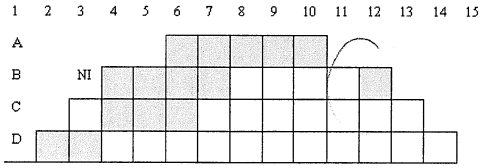

C.

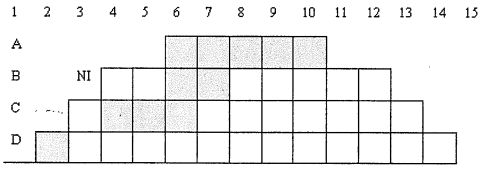

D.✔

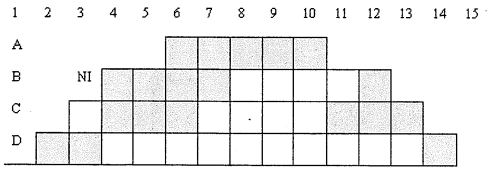

69. G2.2.28 001/GENERIC/2/RO#69/C/A 2.6/3.5/NEW/R/CR03701/

Reasons:

A. C8 and D9 might appear to be uncoupled, but they are in fact coupled diagonally.

B. B12 is uncoupled, but one assembly is permitted to be uncoupled.

C. D2 is uncoupled, but one assembly is permitted to be uncoupled.

D. Correct. While the bundles in B12, C11, C12, C13, and D14 are coupled with each other, they are not coupled back to the assembly locations closest to the NI (located in quadrant B3 in this drawing).

Step	Limit and Precaution	Basis
3.2.20	Core reload/offload refueling patterns shall be arranged such that no more than one fuel assembly is in an uncoupled condition at any time during offload and reload of the fuel assemblies. The definition of uncoupled is when a fuel assembly has no combination of face adjacent or diagonally adjacent loaded core fuel assembly locations back to closest core loaded fuel assembly locations in the area of the core region associated with an source range instrument. 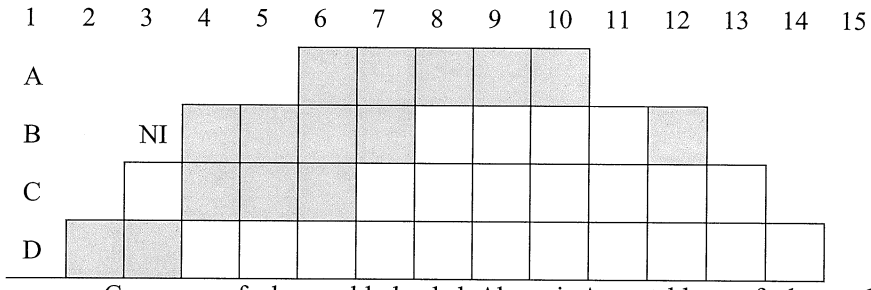 Gray area = fuel assembly loaded: Above is Acceptable one fuel assembly at B12 uncoupled. 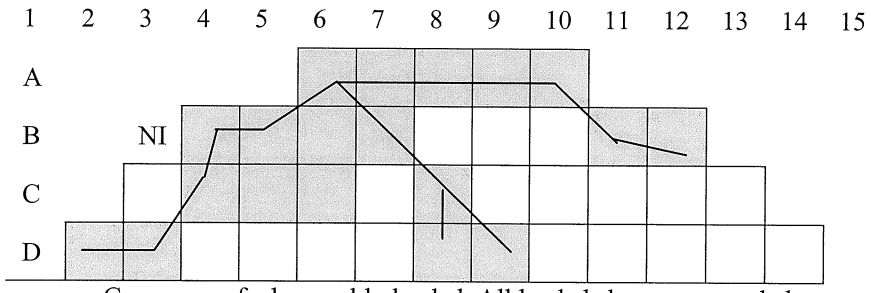 Gray area = fuel assembly loaded: All loaded above are coupled. Line shows coupling paths.	To assure representative neutron count rate during fuel load.

3.2.20 Core reload/offload refueling patterns shall be arranged such that no more than one fuel assembly is in an uncoupled condition at any time during offload and reload of the fuel assemblies.

- The definition of uncoupled is when a fuel assembly has no combination of face adjacent or diagonally adjacent loaded core fuel assembly locations back to closest core loaded fuel assembly locations in the area of the core region associated with an source range instrument.

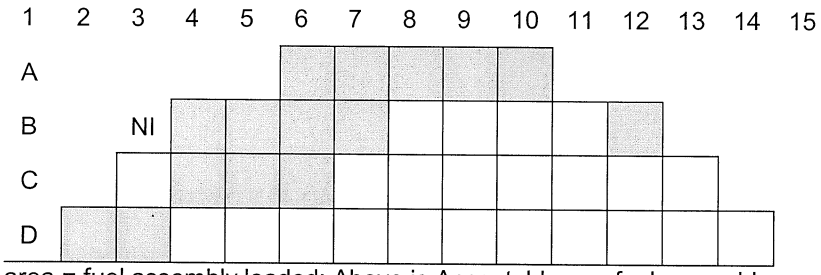

Gray area = fuel assembly loaded: Above is Acceptable one fuel assembly at B12 uncoupled.

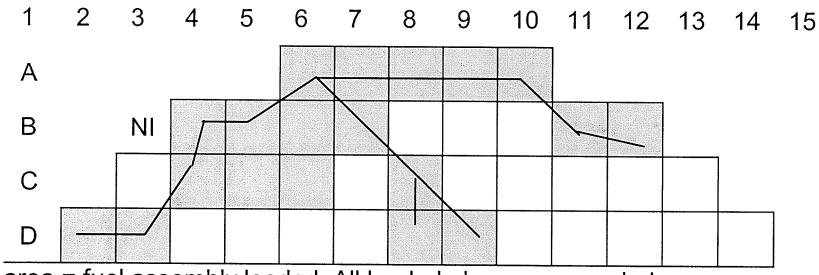

Gray area = fuel assembly loaded: All loaded above are coupled.
Line shows coupling paths.

3.2.21 Under NO circumstances shall spent fuel be placed in the new fuel elevator in Spent Fuel Pool B.

3.2.22 Prior to performing refueling operations, ensure that a Foreign Material Exclusion area has been established around the new fuel, new fuel pit, the spent fuel pits, fuel transfer canal, and the reactor vessel, as applicable, per MNT-NGGC-0007, Foreign Material Exclusion (FME) Program.

3.2.23 Core alterations shall not occur, or shall cease if in progress, if the Refueling Supervisor is required to divert his/her attention from the core alterations. This includes approving changes to movesheets. Other movement within the Refueling Canal may continue, at the Refueling Supervisor's discretion. [NOCS 001714]

3.2.24 All individuals shall review the responsibilities associated with a position or station prior to assuming that station. Turnover of information shall be performed each time a station is to be re-manned.

70. G2.2.33 001/GENERIC/2/RO#70/MEM 2.5/2.9/BANK/R/CR03701/4-028-011
Which ONE of the following describes when two groups of regulating rods move simultaneously during normal operations?

A. Only the first and last 25% of Group 5 rod movement.

B.✔ Only the first and last 25% of Group 6 rod movement.

C. Only the first and last 25% of Group 7 rod movement.

D. The first and last 25% of all regulating rod group movement.

Reasons:

A. The first 25% of group 5 has no overlap with any other group.

B. Correct. The first 25% of group 6 overlaps with the last 25% of group 5. The last 25% of group 6 overlaps with the first 25% of group 7.

C. The last 25% of group 7 has no overlap with any other group.

D. The first 25% of group 5 and the last 25% of group 7 have no overlap with any other group.

OPS 4-28, Obj. 4; OPS-4-28 1-4.0.F.6.e

RO - Bank

Reference(s) provided: None

Group average = ((7x100%)+(1x0%))/8

= 87.5%

7) Since the group average has dropped to 87.5%, the 7-inch fault lights for each rod in the group will illuminate.

- The dropped rod is 87.5% below the group average, and the rods that are still fully withdrawn are 12.5% above the group average of 87.5%.

8) Since the 9-inch deviation condition is also satisfied, the asymmetric fault light on the diamond control panel will also illuminate.

d) Feed and Bleed Permits

1) In order to satisfy the makeup and purification system feed and bleed permits, the following conditions must be satisfied:

- The safety rods must be out (group 1-4 out limits).
- The group 5 average position must be <80% or the group 6 average position must be >95%.
- The regulating group permit may be bypassed with a key lock.
- The safety rod permit cannot be bypassed.

e) Sequence Enable Circuit

1) The regulating rod groups are normally operated with 25% overlap to ensure that reactivity insertion rates are as uniform as possible over the full length of rod travel.

2) The 25% overlap is accomplished through the use of the sequence enable circuit.

3) The sequence enable circuit functions to actuate the regulating groups in the proper sequence with the proper overlap.

- The circuit has no fault sensing capabilities.

4) A group 5 sequence enable (group 5 permitted to withdraw) will be present if:

- The safety rods are out (group out limits exist),
- Group 6 is <25% withdrawn, and
- Group 7 is at its in limit.

5) A group 6 sequence enable (group 6 permitted to withdraw) will be present if:

- The safety rods are out,
- Group 5 is >75% withdrawn, and
- Group 7 is <25% withdrawn.

6) A group 7 sequence enable (group 7 permitted to withdraw) will be present if:

- The safety rods are out,
- Group 6 is >75% withdrawn, and
- Group 5 is at its out limit.

7. ZONE REFERENCE and IN and OUT LIMIT switch assemblies.

a) Each PI tube also contains separate ZONE REFERENCE (0%, 25%, 50%, 75%, and 100%) switches and IN and OUT LIMIT reed switch assemblies.

71. G2.3.2 001/GENERIC/3/RO#71/C/A 2.5/2.9/BANK/R/CR03701/2-032-001
Which ONE of the following is the required posting for a space where it is estimated that an individual could receive 200 mr in any hour at ***15*** centimeters from a point source hot spot?

A. Vital Area

B. ✔ Radiation Area

C. High Radiation Area

D. Locked High Radiation Area

Reasons:

A. While some vital areas can be Radiation Areas, there are also vital areas that are not.

B. Correct. At 30 centimeters the dose rate should be 50 mr/hr. This meets the 5 to 100 mr/hour definition of a radiation area.

C. A high radiation area is 100 mr/hr to 1000 mr/hr.

D. A locked high radiation area is greater than 1000 mr/hr.

OPS 2-32, Obj. 12 & 17; OPS 2-32 Section 1-7.0.B; RSP-101 Step 3.2.28

RO - Bank

Reference(s) provided: None

DOSE = (DOSE RATE) (TIME)

B. Distance

1. Another way of reducing the total dose accumulated is to increase the distance between the worker and the source of the radiation. We all have noticed that the farther away from a campfire we get, the less heat we feel from the fire. The infrared radiation from the fire diminishes in intensity as we move away from it.

2. Radiation is very similar. In a nuclear facility, we deal with several types of radiation. An alpha particle can travel only a few centimeters in air so if the source were purely alpha, we would only have to be a few feet from it and the dose rate would drop to zero. If the source were emitting beta particles, we would have to be several yards from the source for the dose rate to be zero.

3. For a gamma or neutron source, the distance might be as great as a few miles, depending on the strength of the source. The point here is that even though the gammas and neutrons are very long distance travelers, just increasing the distance between the source and the worker can reduce their effect.

4. Since gamma travels farthest, we will discuss gamma sources and the effect of distance on the dose rate. Gamma sources are considered to have three different shapes and are named accordingly. These are plane source, line source and point source.

5. A plane source would be the side of a tank containing radioactive fluid; a line source would be a pipe. All sources, no matter how large, reach a point where they may be considered a point source for dose calculations. As a general rule, an object will take on the characteristics of a point source at a distance three times the largest dimension of the source.

6. For example, if a tank measures 20 feet tall and 10 feet in diameter, it would be considered a point source at 60 feet from the tank. Inside the 60 foot distance, the dose rate increases, as we get closer to it, but not with the characteristics of a point source. In this range, the tank would be considered a plane source.

7. Of the three types of sources, the point source most commonly used to illustrate the dramatic decrease in the exposure rate with distance. For a point source the dose rate decreases as a function of the square of the distance from the source. The formula is written as follows:

$$\frac{I_1}{I_2} = \frac{D_2^2}{D_1^2}$$

Where : I_1 = The dose rate (intensity) at initial distance
D_1 = The distance from the source where I_1 is taken
I_2 = The dose rate at final distance
D_2 = The final distance from the source

C. Shielding

1. Gamma radiation is the largest contributor to radiation levels in the plant. Alpha radiation cannot penetrate the outer layer of dead skin, so it is not a problem outside the body. The material in safety glasses can shield beta radiation. Neutrons are only found inside the biological shield during reactor operation and shielded by materials containing a large number of small atoms, water is a good example. Gamma radiation dose rates are not reduced to zero by the shielding provided by the pipes and other components in the plant.

2. The manner that gamma rays react with matter was discussed in section 2.0. A good shield for gamma rays should be dense to increase the probability of an interaction between a molecule in the shield and a gamma ray passing through it. Lead is good for this application. There are instances where other types of shielding may be used.

3. Water is used as a shield for the people on the fuel transfer bridges. Water would normally be a poor choice for a gamma shield because it is not very dense; in this case we are able to have a large quantity of water between the radiation source, a fuel assembly, and the person on a bridge.

4. Shield performance is measured by its ability to absorb the incident radiation and thus reduce the exposure on the other side of the shield.

5. Another factor, which must be taken into consideration, is the energy of the incident radiation. As the energy of the incident radiation increases, it takes a thicker shield to absorb the radiation.

3.2.21 Personnel Dosimetry Devices - devices designed to be worn or carried by an individual for the purpose of measuring absorbed dose.

3.2.22 Personal Hand Carried Items - Personal items such as radios, pens/pencils, clipboards, flashlights, PPE, etc. Tools are not considered personal items.

3.2.23 "Progress Energy dose" is defined as annual dose received at Progress Energy facilities. Total dose is defined as annual dose received all licensed facilities combined.

3.2.24 Protective Clothing (PCs) - the clothing worn for the purpose of protecting individuals from loose-surface contamination.

3.2.25 Personnel Protective Equipment (PPE) – Any equipment worn to protect personnel from workplace hazards (e.g., protective clothing, face shields, respirators).

3.2.26 Radiation Work Permits (RWP) - a Radiation Work Permit/ALARA Task is the administrative control which, upon approval, authorizes entry into an RCA.

3.2.27 RAM - Radioactive Material - any licensed material meeting one or more of the following criteria:

- Detectable fixed-contamination as identified by appropriate survey instrumentation,
- Detectable loose-surface contamination as identified by appropriate survey instrumentation.

3.2.28 Radiologically Defined Areas:

- Restricted Area – the plant areas where access is limited (restricted) for protection against radiation and radioactive materials. The CR-3 restricted areas are restricted by use of physical barriers, but are not visually posted as a "Restricted Area". These areas include the CR-3 fenced-in Security Protected Area, the 'D' and 'G' Radioactive Materials Storage Warehouse area. Other areas may be set up and access controls established, either on a temporary or long-term basis as needed.
- Radiation Control Area (RCA) – areas:
  - areas where dose rates are sufficient to cause an individual to receive 500 mrem TEDE in one year or 2 mrem in any one hour
  - areas where authorization for entry is required under an RWP
  - areas where radiological controls are established to track personnel entrance and exit times and electronic dosimetry readings
  - areas where personnel monitoring is normally required prior to exiting (unless the RCA does not have radioactive materials, e.g., rooftops)
- Radioactive Materials Area (RMA) - any room or area, normally within an RCA, and that is normally posted as a "Radioactive Materials Area". The RMA contains radioactive material (above a specified level) that is being

used or stored. Personnel contamination monitoring is normally required upon exit.

- ALARA Control Area - A CR-3 term used for areas which are locked and/or posted to warn and restrict occupation of an area with elevated dose rates. There are no regulatory required postings or demarcations associated with its use,
- Radiation Area - An accessible area, posted as a "Radiation Area", where radiation levels exceed 5 mrem in an hour at 30 cm (1 foot),
- High Radiation Area – An accessible area, posted as a "High Radiation Area", where radiation levels exceed 100 mrem in an hour at 30 cm (1 foot),
- Locked High Radiation Area – An accessible area, posted as a "Locked High Radiation Area", where radiation levels are ≥1000 mrem in an hour at 30 cm (1 foot),
- Very High Radiation Area – An accessible area, posted as a "Grave Danger, Very High Radiation Area," where radiation levels exceed 500 rad per hour at 1 meter,
- Contaminated Area – an area, posted a "Caution, Contaminated Area", where removable surface contamination levels are >1000 dpm/100 cm^2 readily detectable beta-gamma activity or > 20 dpm/100 cm^2 alpha activity,
- Airborne Radioactivity Area – an area where airborne radioactivity exists in excess of the derived air concentrations (DACs) specified in Appendix B, to 10 CFR 20, or to such a degree that an individual present in the area without respiratory protective equipment could exceed, during the hours an individual is present in a week, an intake of 0.6 % of the annual limit on intake (ALI) or 12 DAC-hours,
- Hot Particle Area – an area where Hot Particles are suspected or known to exist,
- Hot Spot – a localized spot where contact dose rate is greater than 300 mrem/hr and more than 5 times the dose rate at 30 cm (1 foot),

3.2.29 Modesty clothing – Garments that are worn under protective clothing for purposes of modesty while performing dress and undress into protective clothing.

3.2.30 Quality factor – the factor used to convert the rad to rem. The quality factor is used as a multiplier to adjust the absorbed dose (rad) into dose equivalent (rem). The quality factor is:

- 1 for gamma and beta radiation,
- 2 - 11 for neutrons, depending on energy, and
- 20 for alpha particles.

3.2.31 Rad – the absorbed dose (energy absorbed, excludes quality factor).

3.2.32 Rem – the dose equivalent (the rad multiplied by the quality factor).

3.2.33 Step-Off-Pad (SOP) - the clean portion of a Contaminated Area boundary which denotes the exit location.

72. G2.3.4 001/GENERIC/3/RO#72/C/A 2.5/3.1/BANK/R/CR03701/5-043-003
Work is to be completed in a radiation area. This work requires a team of two employees. The following information is provided on the employees:

Employee ONE, TEDE = 2.0 Rem.
Area that employee ONE will be in has a dose rate of 250 mr/hr.

Employee TWO, TEDE = 1.0 Rem.
Area that employee TWO will be in has a dose rate of 500 mr/hr.

What is the maximum amount of time this team can work without exceeding the Federal (10CFR20) occupational dose limits? (Assume approval from the Site Vice President to exceed 2.0 Rem has been received and Lifetime Dose is not a factor)

A. 4 hours

B. 6 hours

C.✔ 8 hours

D. 12 hours

Reasons:

Employee TWO has 4.0 Rem left to equal the Federal (10CFR20) Limit of 5.0 Rem.

4.0 divided by 500 mr/hr = 8 hours (C is correct answer).

OPS 5-43, Obj. 2; DOS-NGGC-0004 Step 9.1

RO - Bank

Reference(s) provided: None

5.0 PREREQUISITES

N/A

6.0 PRECAUTIONS AND LIMITATIONS

N/A

7.0 SPECIAL TOOLS AND EQUIPMENT

N/A

8.0 ACCEPTANCE CRITERIA

N/A

9.0 INSTRUCTIONS

R2.1 9.1 Adult Occupational Dose Limits

9.1.1 Whole Body - The more limiting of a total effective dose equivalent equal to 5 rem or the sum of the deep dose equivalent and the committed dose equivalent to any individual organ or tissue other than the lens of the eye equal to 50 rem.

9.1.2 Skin - A shallow dose equivalent equal to 50 rem.

9.1.3 Lens of Eye - A lens dose equivalent equal to 15 rem.

9.1.4 Extremities - A shallow dose equivalent equal to 50 rem.

9.2 Occupational Dose to Minors

Minors shall not be employed to work in radiation control areas, although they may enter as visitors.

9.3 Progress Energy Annual Administrative Dose Limits

9.3.1 0.5 rem Progress Energy dose if non-Progress Energy dose for the current year has not been determined. No dose extension is permitted.

9.3.2 2 rem Progress Energy dose not to exceed 4 rem total dose if non-Progress Energy dose for the current year has been determined.

73. G2.4.10 001/GENERIC/4/RO#73/MEM 3.0/3.1/NEW/R/CR03701/
For which ONE of the following alarms is the Reactor Operator **required** to refer to the appropriate Main Control Board Annunciator Response procedure?

A. G-08-08, "Waste Disposal Panel Trouble"

B. O-05-09, "Hydrogen Panel Alarm"

C. N-01-08, "Cond Demin Panel Trouble"

D.✔ B-07-06, "H2 Sampling Panel A Trouble"

Reasons:

A, B, C: Per AI-500 Appendix 3, these alarms are specifically excluded from the AI-500 requirement to review and perform the applicable AR.

D. Correct. Nothing in the stem would indicate this was an expected alarm. Per AI-500 Appendix 3, the AR must be reviewed for each unexpected alarm.

OPS 5-38, Obj. 31; AI-500 Appendix 3, Sections 5.1 and 5.2

RO - New

Reference(s) provided: None

CONTROL ROOM ACTIVITIES

5.0 Annunciator Alarm Response (AR) [NOCS 097935]

5.1 General Requirements for Annunciator Response protocol:

5.1.1 Operations personnel shall know the reason why each illuminated annunciator in their area of responsibility is in alarm.

5.1.2 During normal operation, three-way communication of alarms and use of Annunciator Response procedures is required unless specifically exempted.

5.1.3 During Abnormal Events, Emergency Events, AI-505 – "Conduct of Operations During Abnormal and Emergency Events", provides additional annunciator response protocol guidance.

5.1.4 The use of the global alarm silence function is limited to the initial entry into EOP-02 per the provisions covered in AI-505, "Conduct of Operations During Abnormal and Emergency Events".

5.1.5 "Expected Alarm" – is an alarm that is specifically identified in the associated activity procedure, or has been previously discussed between the acknowledging operator and the CRS as part of the pre-job / evolution briefing. All other alarms are "Unexpected Alarms".

5.1.6 The CRS will not announce the receipt or clearing of alarms to the Main Control Board Operators.

5.1.7 During evolutions away from the main control board, operators performing the evolution will communicate expected alarms to a Main Control Board Operator prior to creating the control board alarm condition.

5.1.8 Upon receipt of an alarm the acknowledging operator will scan associated annunciator panels for any additional concurrent alarms prior to alarm acknowledgement and then view the displayed event point description.

5.1.9 Main Control Board AR's do not need to be pulled for the following:

- During Modes 5, 6 or Defueled for alarms received on out of service systems or equipment
- Alarms caused by a known equipment deficiency documented in the Degraded Equipment Log (DEL) or Degraded Annunciator Log (DAL), provided the deficiency is discussed between the CRS and control board operator.
- Operator selected computer alarms,
- The MCB Computer Alarm,
- Fire System Trouble,
- Hydrogen Panel Alarm,
- Cond Demin Panel Trouble and
- Waste Disposal Trouble

CONTROL ROOM ACTIVITIES

5.1.10 The acknowledging operator is to differentiate 'clearing' alarms from 'incoming' alarms by indicating, in addition to the alarm description, that the alarm is "clear" or words to that effect.

5.1.11 During Modes 5, 6 or Defueled, the normal Annunciator Alarm Response Protocol is only required for systems related to:

- Key Safety Functions as defined in AI-504, Guidelines for Cold Shutdown and Refueling including;
- RCS Inventory
- RCS Temperature and Pressure
- Plant Electrical
- Core Cooling
- Other Critical Parameters as defined by the Control Room Supervisor

All other systems and equipment that are removed from service during this time do not require normal Annuciator/Alarm Response Protocol i.e. no announcement or AR usage required.

5.2 Normal Alarm Response Protocol

5.2.1 Normal Alarm Response Protocol in the Main Control Room:

- The control board operator acknowledging an Unexpected Alarm is to communicate the alarm to the CRS by announcing at least a paraphrase of the alarm window or event point wording.
- In cases of concurrent alarms, the acknowledging operator will announce any Level 1 (red) alarms first.
- An operator will review and perform the applicable AR for each Unexpected Alarm. The operator will comply with the applicable portions of the AR Sections addressing "Redundant Indication Which Will Verify Alarm" and "Operator Actions For A Valid Alarm".
- AR's do not have to be reviewed for recurring alarms that have been previously pulled (that shift) and complied with. However, the AR specified actions for valid alarms will be re-performed or verified.
- If an alarm clears before all annunciator response actions are completed, then the remaining AR actions shall be taken or properly dispositioned.
- The Control Board operators will ensure AR procedure actions for a valid alarm are promptly performed or properly dispositioned by the CRS.
- The CRS will ensure that annunciator alarms are investigated and corrective actions necessary to clear the alarm are taken. The evaluation of alarm conditions will be made based on reasonably available pertinent instruments and information sources.

74. G2.4.18 001/GENERIC/4/RO#74/MEM 2.7/3.6/BANK/R/CR03701/5-097-001
The following conditions exist:

- The plant has undergone a loss of adequate subcooling margin
- The situation deteriorated into an inadequate core cooling event
- Incore temperatures entered region 3.
- OTSG heat transfer and adequate subcooling margin have been recovered.
- Reactor Coolant Pumps (RCPs) are not running.

EOP-7, Inadequate Core Cooling, requires that, under these conditions, a 5° F/½ hr cooldown rate be maintained.

Which one of the following is the basis for limiting the cooldown rate to less than 5° F/½ hr cooldown rate?

A. Aids in maintaining PTS limits on the reactor vessel head.

B. Ensures secondary water sources are not depleted.

C.✔ Prevents loss of natural circulation.

D. Limits thermal stresses on the fuel assemblies.

Reasons:

Choices A, B and D are all parameters that are effected by the lower cooldown rate but are not the basis of the action. The basis of the action is to maintain non-condensible gases that may have been generated while in Region 3 in solution. These non-condensible gases could collect in the upper regions of the hot legs and disrupt natural circulation cooling.

The EOP step specifies that the cooldown rate be limited to 5°F per half hour. Because CR-3 does not have a reactor vesselhead vent, the EOPs limit cooldown rate while in natural circulation following entry into ICC region 3. This limit on cooldown rate prevents the RCS from being depressurized so rapidly that noncondensible gasses expand from the head bubble into the loops faster than they can be removed by the hot leg high point vents, resulting in an interruption in natural circulation.

OPS 5-97 Obj. 3; EOP-TBD Cross-Step Document for EOP-7 Step 3.35.

RO - Bank

Reference(s) provided: None

EOP-TBD Cross-Step Document
EOP-07, Inadequate Core Cooling

EOP Step: 3.35

TBD Step: None **Section:** None **Deviation Type:** Add

Generic Deviation: None

Justification:

The GEOG transitions to LOCA cooldown tab once RCS reaches saturated conditions. CR3 stays in the ICC procedure to establish plant control (i.e. contol cooldown, close PORV) prior to transitioning. The TBD states that when heat transfer is restored, the RCS should be cooled at the maximum rate attainable until saturated RCS conditions are reached. Once the RCS is saturated, the cooldown rate should be reduced as necessary to maintain overall control. The GEOG also states that if ASCM does not exist, then maintaining ITS cooldown rates are not required. CR3 tries to establish ITS cooldown limts and also restricts to 5°F per half hour if ICC region 3 was entered. CR3 does not have a reactor vessel head vent, and is limited to a 5°F per half hour cooldown while in natural circulation following entry into ICC region 3. This limit on cooldown rate prevents the RCS from being depressurized so rapidly that non-condensable gasses expand from the head bubble into the loops faster than they can be removed by the hot leg high point vents, resulting in an interruption in natural circulation. This is a commitment to the NRC. Adding the limitation to the cooldown rate does not deviate from the GEOG mitigation strategy for LOCA cooldown once saturated condition is reestablished as defined in TBD (Ref Vol 3, III.F step 3.4).

Step Basis:

Previous steps in this procedure directed lowering OTSG pressures to establish a strong secondary heat sink. In order to reach this step the RCS must have been restored to saturated or subcooled conditions. With the RCS saturated or subcooled, OTSG steaming should be reduced to control cooldown to within limits, if possible. The Loss of SCM rule requires that full HPI is established and maintained until SCM is regained. HPI may produce a cooldown rate in excess of Tech Spec limits, even with OTSG steaming stopped.

The EOP step specifies that the cooldown rate be limited to 5°F per half hour. Because CR-3 does not have a reactor vessel head vent, the EOPs limit cooldown rate while in natural circulation following entry into ICC region 3. This limit on cooldown rate prevents the RCS from being depressurized so rapidly that non-condensable gasses expand from the head bubble into the loops faster than they can be removed by the hot leg high point vents, resulting in an interruption in natural circulation.

Setpoint Code: RC111 **Setpoint Value**: 5°F/1/2 hr RCS Cooldown

References:

1. Letter to NRC 3F1084-11
2. Letter 3N0785-19, "Granting of Exemption from 10 CFR 50.44 (c)(3)(iii), Reactor Vessel Head Vent"

75. G2.4.25 001/GENERIC/4/RO#75/MEM 2.9/3.4/BANK/R/CR03701/5-069-004
A member of the plant security force calls the control room and reports a fire in the Cable Spreading Room.

Which of the following describes the actions, if any, required by the operating crew at this time?

A.✓ Enter AP-880, Fire Protection, only.

B. Enter AP-990, Shutdown from Outside the Control Room, only.

C. Enter AP-880, Fire Protection, and AP-990, Shutdown from Outside the Control Room.

D. No Abnormal Procedures are applicable at this time.

Reasons:

A. Correct. The entry conditions for AP-880, Fire Protection, states "If notified of a fire use this procedure."

B. The entry conditions for AP-990, Shutdown from Outside the Control Room, only apply if control room habitability is affected or a loss of plant control.

C. No information is provided that meets the entry conditions of AP-990, Shutdown from Outside the Control Room.

D. The entry conditions for AP-880, Fire Protection, are present when notified of a fire.

OPS 5-69, Obj. 2; AP-880 Entry Condition; OPS 5-69 Att. 1

RO - Bank

Reference(s) provided: None

FIRE PROTECTION

1.0 ENTRY CONDITIONS

IF notified of a fire in protected area,

THEN use this procedure.

2.0 IMMEDIATE ACTIONS

NOTE
There are no immediate actions for this procedure.

SHUTDOWN FROM OUTSIDE THE CONTROL ROOM

1.0 ENTRY CONDITIONS

IF a fire exists in any of the following areas:

- Control Room
- Cable spreading room
- Control Complex HVAC

which affects Control Room habitability,

OR results in loss of plant control,

THEN use this procedure.

2.0 IMMEDIATE ACTIONS

NOTE

There are no immediate actions for this procedure.

1.0 ENTRY CONDITIONS

IF notified of a fire in protected area,

THEN use this procedure.

Definition of fire can be subjective. However, the definition in EM-202 provides some guidance to when the procedure should be entered.

Fire - *Combustion characterized by heat and light. Sources of smoke such as slipping drive belts or overheated electrical equipment do NOT constitute fires. Observation of flame is preferred but is NOT required if large quantities of smoke and heat are observed.*

Reports of fires located outside the PA should be immediately relayed to the Site Emergency Response Coordinator. AP-880 is NOT entered. The Site ERC's monitor radio channel 7. It is not an expectation of the Fire Brigade to fight fires outside of the PA.

2.0 IMMEDIATE ACTIONS

A. NOTE

There are no immediate actions for this procedure.