TRANSNUCLEAR
AN AREVA COMPANY

December 21, 2007
E-25820

U. S. Nuclear Regulatory Commission
Attn: Document Control Desk
One White Flint North
11555 Rockville Pike
Rockville, MD 20852

Subject: Revision 1 to Transnuclear, Inc. (TN) Application for Amendment 11 to the Standardized NUHOMS® System (Docket No. 72-1004; TAC NO. L24080)

References:
1. Letter from Joseph M. Sebrosky (NRC) to Donis Shaw (TN), "REQUEST FOR ADDITIONAL INFORMATION FOR REVIEW OF AMENDMENT 11 TO THE STANDARDIZED NUHOMS® SYSTEM (TAC NO. L24080)," October 22, 2007
2. Letter from Robert Grubb (TN) to Document Control Desk, "Supplemental Information Regarding the Application for Amendment 11 of the NUHOMS® Certificate of Compliance No. 1004 for Spent Fuel Storage Casks, Revision 0, Docket No. 72-1004, (TAC No. L24080)", August 23, 2007

Gentlemen:

This submittal provides responses to the request for additional information (RAI) forwarded by Reference 1. Enclosure 2 herein provides each of the NRC staff RAI followed by a TN response. Enclosure 3 provides and updated cross reference list between proposed Amendment 10 and proposed Amendment 11 Technical Specifications. Enclosure 4 provides Amendment 11 Revision 1 proposed changes to the NUHOMS® CoC 1004 (Amendment 9), the associated Technical Specifications, and the Standardized NUHOMS® System UFSAR (Revision 9). Enclosure 5 provides updated sheets listing the changed UFSAR pages.

In the Technical Specifications, the Amendment 11 Revision 1 changed areas are indicated by revision bars in the right margin. For the UFSAR, replacement and new Amendment 11 pages are provided, annotated as Revision 1, with changes indicated by italicized text and revision bars. Certain changes on these pages had been made through the 10 CFR 72.48 process. Those changes are indicated by double revision bars and "72.48" in the right margin.

To facilitate staff review of certain RAI responses, three shielding calculations are included as Enclosures 6, 7, and 8. Previous revisions of two of these calculations were submitted, via Reference 2, without their associated computer disks, per agreement with the NRC staff. Accordingly, the enclosed calculations also do not include their disks; however, Enclosure 9 is a compact disk containing certain proprietary computer files from the Enclosure 8 calculation. Enclosure 10 provides a hardcopy listing of those computer files. These calculations are provided as a convenience to the staff and are not considered part of the amendment application submittal under review.

7135 Minstrel Way, Suite 300, Columbia, MD 21045
Phone: 410-910-6900 • Fax: 410-910-6902

NMSS01
NMSS

Transnuclear, Inc. believes that RAI 7-3 is equivalent to CoC 1004 Amendment 10 RAI 9-18 (TAC NO. L24052). In response to Amendment 10 RAI 9-18, TN had committed to providing associated changes to the NRC by January 28th 2008. As discussed in the meeting with the NRC staff on November 20, 2007, TN will incorporate those same changes from the CoC Amendment 10 Technical Specifications into the Amendment 11 Technical Specifications and submit them to NRC one week following receipt of the preliminary CoC/SER for CoC 1004 Amendment 10.

This submittal includes proprietary information which may not be used for any purpose other than to support NRC staff review of the application. In accordance with 10 CFR 2.390, I am providing an affidavit (Enclosure 1) specifically requesting that you withhold this proprietary information from public disclosure. The two UFSAR drawings included herein contain security-related information. Accordingly, both a proprietary, security-related version and a non-proprietary, non-security-related version of this submittal are provided.

Should the NRC staff require additional information to support review of this application, please do not hesitate to contact Mr. Don Shaw at 410-910-6878 or me at 410-910-6930.

Sincerely,

Robert Grubb
Senior Vice President - Engineering

cc: Jennifer Davis (NRC SFST) (11 paper copies of this cover letter and Enclosures 1 through 5, 1 paper copy of Enclosures 6, 7, 8, and 10, and 1 copy of the Enclosure 9 compact disk, all provided in a separate mailing)

Enclosures:

1. Affidavit Pursuant to 10 CFR 2.390
2. RAI Responses
3. Technical Specifications Cross Reference Table between proposed Amendment 10 and proposed Amendment 11
4. Amendment 11 Revision 1 Proposed changes to the NUHOMS® CoC 1004 Certificate of Compliance (Amendment 9), the associated Technical Specifications, and the UFSAR (Revision 9)
5. Lists of Changed UFSAR Pages Associated with Amendment 11
6. Transnuclear, Inc. Calculation NUH06L-0501, "OS197L 75 Ton Transfer Cask As-Built Configuration Shielding Analysis," Revision 3 (without disks)
7. Transnuclear, Inc. Calculation NUH06L-0503, "OS197L Occupational Exposure due to Remote Handling Device Failure," Revision 2 (without disks)
8. Transnuclear, Inc. Calculation NUH06L-0504, "Shielding Analysis for On-Site Transfer Cask OS197L due to 32PT DSC Design Basis Fuel at selected transfer and loading operations," Revision 0 (without disks)
9. Proprietary Compact Disk Containing the Computer Files Listed on Enclosure 8 Listing of Proprietary Computer Files Enclosed
10. Listing of Proprietary Computer Files Enclosed

AFFIDAVIT PURSUANT TO 10 CFR 2.390

Transnuclear, Inc.)
State of Maryland) SS.
County of Howard)

I, Robert Grubb, depose and say that I am Senior Vice President of Transnuclear, Inc., duly authorized to make this affidavit, and have reviewed or caused to have reviewed the information which is identified as proprietary and referenced in the paragraph immediately below. I am submitting this affidavit in conformance with the provisions of 10 CFR 2.390 of the Commission's regulations for withholding this information.

The information for which proprietary treatment is sought is contained in Enclosures 6, 7, 8 and 9 and as listed below:

1. Transnuclear, Inc. Calculation NUH06L-0501, "OS197L 75 Ton Transfer Cask As-Built Configuration Shielding Analysis," Revision 3 (proprietary version, without disks)
2. Transnuclear, Inc. Calculation NUH06L-0503, "OS197L Occupational Exposure due to Remote Handling Device Failure," Revision 2 (proprietary version, without disks)
3. Transnuclear, Inc. Calculation NUH06L-0504, "Shielding Analysis for On-Site Transfer Cask OS197L due to 32PT DSC Design Basis Fuel at selected transfer and loading operations," Revision 0 (proprietary version, without disks)
4. Compact Disk Containing Certain Computer Files Associated with Item 3 above

These documents have been appropriately designated as proprietary.

I have personal knowledge of the criteria and procedures utilized by Transnuclear, Inc. in designating information as a trade secret, privileged or as confidential commercial or financial information.

Pursuant to the provisions of paragraph (b) (4) of Section 2.390 of the Commission's regulations, the following is furnished for consideration by the Commission in determining whether the information sought to be withheld from public disclosure, included in the above referenced document, should be withheld.

1) The information sought to be withheld from public disclosure are OS197L Transfer Cask shielding calculations, plus certain computer files associated with one of those calculations, which are owned and have been held in confidence by Transnuclear, Inc.

2) The information is of a type customarily held in confidence by Transnuclear, Inc. and not customarily disclosed to the public. Transnuclear, Inc. has a rational basis for determining the types of information customarily held in confidence by it.

3) The information is being transmitted to the Commission in confidence under the provisions of 10 CFR 2.390 with the understanding that it is to be received in confidence by the Commission.

4) The information, to the best of my knowledge and belief, is not available in public sources, and any disclosure to third parties has been made pursuant to regulatory provisions or proprietary agreements which provide for maintenance of the information in confidence.

5) Public disclosure of the information is likely to cause substantial harm to the competitive position of Transnuclear, Inc. because:

a) A similar product is manufactured and sold by competitors of Transnuclear, Inc.

b) Development of this information by Transnuclear, Inc. required expenditure of considerable resources. To the best of my knowledge and belief, a competitor would have to undergo similar expense in generating equivalent information.

c) In order to acquire such information, a competitor would also require considerable time and inconvenience related to the development of a design and analysis of a dry spent fuel storage system.

d) The information required significant effort and expense to obtain the licensing approvals necessary for application of the information. Avoidance of this expense would decrease a competitor's cost in applying the information and marketing the product to which the information is applicable.

e) The information consists of descriptions of the design and analysis of dry spent fuel storage and transportation systems, the application of which provide a competitive economic advantage. The availability of such information to competitors would enable them to modify their product to better compete with Transnuclear, Inc., take marketing or other actions to improve their product's position or impair the position of Transnuclear, Inc.'s product, and avoid developing similar data and analyses in support of their processes, methods or apparatus.

f) In pricing Transnuclear, Inc.'s products and services, significant research, development, engineering, analytical, licensing, quality assurance and other costs and expenses must be included. The ability of Transnuclear, Inc.'s competitors to utilize such information without similar expenditure of resources may enable them to sell at prices reflecting significantly lower costs.

Further the deponent sayeth not.

Robert Grubb
Senior Vice President, Transnuclear, Inc.

Subscribed and sworn ~~to me~~ before this 20th day of December, 2007.

Notary Public

My Commission Expires 10 / 14 / 2008

Enclosure 2 to TN E-25820

RAI Responses

CHAPTER 1 General Information

1-1 Update the Certificate of Compliance, the Technical Specifications and the Safety Analysis Report for the Standardized NUHOMS® Amendment 11 application to reflect changes that are being made to Amendment 10 to the Standardized NUHOMS® design.

The Amendment 11 application is based on the proposed Amendment 10 application being approved. The staff issued a request for additional information (RAI) associated with Amendment 10 on August 29, 2007 (see ADAMS accession number ML072410348). The staff believes that these RAIs will lead to changes in the Standardized NUHOMS® Safety Analysis Report and to the Technical Specifications and Certificate of Compliance. Because Amendment 11 is based on Amendment 10, the application for Amendment 11 should be updated to reflect the changes made to the Amendment 10 application.

This information is required by the staff to assess compliance with 10 CFR 72.11

Response to 1-1:

The Amendment 11 Certificate of Compliance, the Technical Specifications (TS) and Safety Analysis Report (SAR) pages 1.3-7, T.8-5, T.8-6, T.8-8, T.8-12, T.9-6, U.8-5, U.8-6, U.8-8, U.8-12, and U.9-6 are updated to reflect changes that were made to these same documents as a result of the Amendment 10 RAIs. Whenever Technical Specifications are referred to from SAR pages, the Amendment 11 TS is cited.

CHAPTER 2 Structural Evaluation

Note: RAI 2-1 through 2-3 apply to the structural review of the General Description of the Updated Final Safety Analysis Report (UFSAR)

2-1 Identify and describe Appendix V that is referenced on proposed UFSAR Page 7.1-1.

References in the UFSAR to other portions of the final safety analysis report should be to information that is currently available and not be to something that may be provided in the future.

This information is needed to confirm compliance with 10 CFR 72.11.

Response to 2-1:

TN added a modified version of the HSM-H module, designated as HSM Model 202, to the Standardized NUHOMS system, under the provisions of the 10 CFR 72.48 rule (72.48). This occurred subsequent to TN's latest submittal of UFSAR to the NRC (Revision 9). The HSM Model 202 72.48 evaluation is documented in Appendix V of the UFSAR.

The reference to Appendix V cited in this RAI is not in the Amendment 11 application, but rather is in a separate submittal, forwarded by TN letter E-24900, which provided Appendix W and other associated UFSAR pages from the 72.48 evaluation which added the OS197L transfer cask to the UFSAR, to facilitate NRC staff review of the Amendment 11 application. The 72.48 evaluation involving HSM Model 202 (Appendix V) was completed prior to the 72.48 evaluation involving the OS197L (Appendix W), so the reference to Appendix V is required to be reflected on any associated UFSAR pages. These two 72.48 evaluations along with others will be incorporated into the UFSAR Revision 10.

2-2 Provide justification for the omission of detailed drawings of the Trailer Shielding that is classified in Table W.2-1 as Important to Safety. In addition, provide information regarding the design conditions that apply to these shielding structures and components.

Figure W.1-3 and the text on Page W.1-3 indicate that a portion of the shielding is permanently mounted to the cask support skid and that additional shielding plates can be bolted to the skid to provide additional skid shielding in the bottom area of the skid. The top area of the skid shielding is provided by two separate "lid" type structures that are apparently attached to the cask support skid with a "leg and slot" configuration near the four corners.

This information is needed to confirm compliance with 10 CFR 72.11.

Response to 2-2:

The requested drawings have been added to Section W.1.5. The only design condition that the Supplemental Trailer Shielding provides is to limit the exposure of the plant workers and public to doses that are ALARA during normal conditions of transfer. Because of their massive nature the Supplemental Trailer Shielding will provide some

protection of the cask from environmental effects such as tornado, wind and missile loads. However, no credit is taken for the Supplemental Trailer Shielding in evaluation of these accident conditions for the OS197L TC. As discussed in Chapter W.2 the OS197L cask is designed and built to the same criteria as the OS197 cask described in Chapter 2. The OS197L cask is fully capable of resisting all environmental and accident loads described in W.2 with no assistance from the Supplemental Trailer Shielding carried on the trailer. Therefore, the design conditions that pertain to the structural aspects of the shielding are to support its self weight, lifting loads and those loads transmitted to it during transfer operations only. See response to RAI 2-4 for additional details.

2-3 Provide drawings in Section W.1.5 comparable to those for the transfer cask for the Important to Safety trailer shielding that is identified and classified with respect to safety in Table W.2-1. (See also RAI 5-1)

Figures W.1-3 and W.1-4 provide a general overview of the additional shielding that is to be used with the OS197L transfer cask (TC), however only material thicknesses are provided. Other dimensional details and interface connections with the trailer assembly are not provided.

This information is needed to confirm compliance with 72.236(d).

Note: RAI 2-4 applies to the structural review of the principal design criteria

Response to 2-3:

The requested drawings have been added to Section W.1.5

2-4 Identify the design criteria that are to be used for environmental conditions and natural phenomena design conditions for the skid/trailer additional shielding noted in Section W.1.1 as being required with the use of the OS197L TC system.

While Section W.2.2 states for the OS197L TC system that, " The environmental conditions, natural phenomena and design criteria are the same as described for the NUHOMS OS197 TC in Chapter 3, Section 3.2.5.3 only addresses the TC design based on the ASME Code, Subsection NC for Class 2. Additional required shielding for use on the skid/trailer is not addressed.

This information is needed to confirm compliance with 10 CFR 72.236(b).

Note: RAIs 2-5 and 2-6 apply to the structural review of the installation design

Response to 2-4:

The environmental conditions, natural phenomena, and design criteria described in Chapter 3 are applicable to the OS197L TC.

The massive steel plate components that make up the Supplemental skid-mounted Trailer Shielding provide a significant measure of protection of the cask from environmental conditions and natural phenomena, such as tornado and missile loads.

However, the structural and shielding evaluations of the OS197L TC described in Sections W.3 and W.5 do not take credit for the skid-mounted Trailer Shielding for these accident conditions. The 2.68" thickness of the structural shell of the OS197L TC exceeds the 2.00" total thickness of the OS197 TC (inner shell of 0.5" plus structural shell of1.5"). Hence, the tornado missile protection capacity of the OS197L is bounded by that of the OS197 TC.

The main purpose of the skid-mounted Trailer Shielding is to limit doses ALARA to plant personnel during transfer operations. Thus, the skid-mounted Trailer Shielding is evaluated for normal conditions of transfer (dead weight, transfer inertia loads). The stress criteria used for the structural evaluation are from the AISC Code, Manual of Steel Construction, Ninth Edition. The stress criteria are summarized in new SAR Section W.3.10.

Technical Specification 4.2.3 is also revised to add the design code for the Supplemental Trailer Shielding.

2-5 Identify the material properties of the aluminum material that is to be used in the design and fabrication of the interim aluminum lid of the OS197L TC that can be used during the transfer from the decontamination area to the transfer trailer and the downending operations.

Section W.3.4 indicates that the material properties for the OS197L TC are specified in Section 8.1, Table 8.1-3, however there is no information contained therein for aluminum.

This information is needed to confirm compliance with 10 CFR 72.236(b).

Response to 2-5:

The interim top cover (lid) is fabricated from aluminum type 6061-T651. Section W.3.4 has been revised to add a paragraph describing the mechanical properties of the aluminum material used for the fabrication of the interim cask cover.

2-6 Provide the comparable information for the interim aluminum cask top lid (cover) that is contained in Tables 8.2.21 through 8.2.23 that reflect the stress analysis results for the stainless steel top lid (cover) relative to the design load conditions listed in Table 3.2-7 and relevant stress criteria comparable to Table 3.2-11.

No information relative to the analyses of the OS197L for the conditions that could exist when the interim aluminum top lid (cover) for the cask is in use appear to be provided.

This information is needed to confirm compliance with 10 CFR 72.236(b).

Note: RAI 2-7 applies to the structural review of the conduct of operations

Response to 2-6:

The interim aluminum cask top cover (lid) is used only inside the fuel building when the OS197L TC is lifted from the decontamination area to the transfer trailer, where it is

down-ended to its horizontal position onto the transfer trailer skid. Furthermore, its use is limited only in the scenario when the neutron shield is to be drained (to reduce total cask weight during this lift), and, consequently, the cask/DSC annulus is to remain filled.

The interim aluminum cover's sole function is to retain the DSC/cask annulus water during the cask down-ending operation. The aluminum cover is installed with a gasket and bolted to the cask with 16 bolts. If a single failure proof crane is used there is no drop accident loads postulated for the interim cover. Furthermore, no built up of internal pressure is possible since the annulus space is vented through fittings in the interim cask cover. Thus, the only stresses on the interim cask top cover are due to the small hydraulic pressure of the cask/DSC annulus water. This hydraulic pressure and the resulting stresses are minimal, on the order of 3 ksi. If a single failure proof crane is not used, the general licensee (utility) is to evaluate accident drop scenario under 10FCR50.59 and 10CFR 72.212 and evaluate consequences of the drop.

Section W.3.9 has been revised to clarify the function and limited use of the interim cask top cover and to document the results of the stress evaluation.

2-7 Identify both limiting conditions relative to water removal from the dry shielded canister (DSC) just prior to the OS197L TC being lifted from the fuel pool.

The current statement on Page W.8-4 addresses the maximum limit of water to be removed, however the minimum amount (that which will allow the limit of a single-failure proof crane to not be exceeded) is not included in the statement. Both conditional limits should be defined.

This information is needed to confirm compliance with 10 CFR 72.11.

Response to 2-7:

The statement on Page W.8-4 has been modified to include both the minimum water removed to meet the 75 ton crane capacity limit and the maximum water removed to empty the DSC.

Note: RAI 2-8 through 2-11 apply to the structural review of the technical specifications

2-8 Specify the ASME B&PV Code, Section III, Division 1 edition and the relevant addenda that are to be used in the design and fabrication of the DSCs and the TCs utilizing the Subsections identified in the proposed Technical Specifications in Sections 4.2.2 and 4.2.3.

As proposed these specifications do not identify the year of the Code edition or the addenda that apply. If there is a variation in the Code edition or addenda that apply to the various models of the DSCs and TCs then a listing should be used to identify the specific model with the Code edition and relevant addenda. Since these Technical Specifications are intended to be Standard Technical Specifications for the Standardized NUHOMS System, they should be consistent with the guidance provided in NUREG-1745, "Standard Format and Content for Technical Specifications for 10 CFR Part 72 Cask Certificates of Compliance." As proposed the Technical Specifications are not consistent with Section 4.2, Codes and Standards of that document.

This information is needed to confirm compliance with 10 CFR 72.236(b).

Response to 2-8:

Sections 4.2.2 and 4.2.3 of the Technical Specifications have been revised to include the ASME Code Edition and relevant Addenda for the various DSCs and TCs.

2-9 Identify any alternatives to the governing codes for the design of the cask system and the individual components that are referenced in the proposed Technical Specifications in Sections 4.2.2 and 4.2.3.

As proposed these specifications do not provide any alternatives to the ASME Boiler and Pressure Vessel Code, Section III, that is referenced as the code of record for the cask system. Since these Technical Specifications are intended to be Standard Technical Specifications for the Standardized NUHOMS System, they should be consistent with the guidance provided in NUREG-1745, "Standard Format and Content for Technical Specifications for 10 CFR Part 72 Cask Certificates of Compliance." As proposed the Technical Specifications are not consistent with Section 4.2, Codes and Standards, of that document.

This information is needed to confirm compliance with 10 CFR 72.236(b).

Response to 2-9:

NUREG-1745 defines Cask System as OVERPACK and its integral Canister. The Transfer Cask is not part of the storage "cask system". Its use is limited during short duration loading and transfer operations. Therefore, Section 4.2.4 of the Technical Specifications is added to include the Alternatives to the ASME Code Edition and relevant Addenda for the various DSCs.

2-10 Justify the omission in the proposed Technical Specifications of an important site foundation consideration that should be made by the user of the cask system that appears to be missing from Section 4.3.3, Site Specific Parameters and Analyses.

As proposed these specifications address the considerations that must be made for potential foundation conditions relevant to liquefaction, but do not address the foundations of sites where soil-structure interaction may be considered important to the response of the storage pad. The response may be such as to require that an amplified response spectra will be produced at the center of gravity of the supported horizontal storage module.

This information is needed to confirm compliance with 10 CFR 72.236(b).

Response to 2-10:

The following statement has been added to Section 4.3.3 of the Technical Specifications.

11. The storage pad location shall be evaluated for the effects of soil structure interaction which may affect the response of the loaded horizontal storage modules.

2-11 Correct the omission of an Important to Safety component, the trailer shielding, identified in Table W.2-1, of the OS197L TC system from Section 4.2, Codes and Standards.

As proposed these specifications do not address the trailer shielding structural design criteria or the fabrication standards that are to be used for this component of the OS197L TC system.

This information is needed to confirm compliance with 10 CFR 72.236(b).

Response to 2-11:

Section 4.2.3 of the Technical Specifications and SAR Chapters W.2 and W.3 are revised to add the trailer shielding structural design criteria and fabrication standards.

CHAPTER 3 Thermal Evaluation

Note: RAI 3-1 and 3-2 are general thermal evaluation questions

3-1 Review and apply all appropriate RAI questions received for Amendment 10 to the NUHOMS® system that also apply to the Amendment 11 application. (Note: The Amendment 10 RAIs are contained in an August 29, 2007, letter (ADAMS accession number ML072410348))

The applicant should carefully evaluate whether the thermal issues identified for the transfer cask and storage designs in Amendment 10 apply to the OS197L transfer cask system and proposed changes to technical specifications in Amendment 11.

This information is needed to satisfy the provisions of 10 CFR 72.11

Response to 3-1:

TN has evaluated all the thermal and other RAI questions received for Amendment 10 and made all the appropriate changes to the technical specifications and UFSAR pages. All the proposed revisions to Amendment 10 Technical Specification and Certificate of Compliance in TN Responses to RAI have been incorporated in Amendment 11 technical specifications. The changes made to operating procedures of 32PTH1 or 61BTH DSCs in Amendment 10 Revision 1 have also been evaluated for other canisters and changes are made to the operating procedures of other canisters and submitted as part of this RAI response.

3-2 Provide a discussion of off-normal events and operational anomalies that could impact the thermal condition of the DSC/TC during transfer operations. These may include (but are not limited to) crane hangup, failure of remote handling equipment, etc. If necessary, provide a thermal analysis of the DSC/TC that demonstrates fuel cladding temperatures remain within applicable limits during these events.

As discussed in RAI question 5-49(b), there are many potential operational occurrences that could affect the DSC/TC during loading and transfer operations. None of these potential occurrences appear to have been evaluated in the SAR for their potential thermal impact on the thermal performance of the components of the DSC/TC system, including fuel cladding.

This information is needed to satisfy the provisions of 10 CFR 72.11 and 10 CFR 72.2.36(f).

Response to 3-2:

Amendment 10, response to RAI 4-1 addressed the revisions made to Operating Procedures to address a case of malfunction of the equipment used for the movement of the cask. These same changes are added to Appendix W, Chapter W.8.

Note: RAI 3-3 and 3-4 apply to SAR Appendix W Chapter 8, "Operating Procedures"

3-3 Provide a thermal analysis of DSCs for which procedures instruct operators to drain water from the DSC following removal from the spent fuel pool. Demonstrate that peak fuel cladding temperature limits are not exceeded for the maximum heat loads for the respective DSCs.

Amendment 11 procedures instruct operators to drain DSCs, prior to sealing of the DSC, in order to accommodate removal with cranes that may have a weight limit imposed. The SAR does not provide an analysis of this operating condition. The staff requires such an analysis to have reasonable assurance that fuel cladding temperatures are not exceeded for the DSCs in question.

This information is needed to satisfy the provisions of 10 CFR 72.11 and 10 CFR 72.236(f).

Response to 3-3:

Amendment 10, response to RAI 8-5 addressed the revisions made to Operating Procedures SAR Sections T.8.1.2 for the 61BTH DSC and U.8.1.2 for the 32PTH1 DSC to add a note to assure that air will not enter the DSC cavity and helium will be present in the DSC cavity during movement of the transfer cask from the fuel pool to the decon area in case of a malfunction of the equipment used for the movement of the cask. Therefore, helium will replace the water drained from these DSCs. In addition, Appendix T, Section T.8.1.2 Step 17 and Appendix U, Section U.8.1.2 Step 18 are revised to add a new step to refill the DSC cavity back with appropriate type of water if water was drained from the DSC cavity to meet the crane weight limits.

With use of helium during water removal and refilling the DSC cavity back after the cask is moved to decontamination area and provisions to keep helium in place during movement of the transfer cask assure that the initial conditions used for the thermal analyses are met and the cladding temperatures will be below the cladding temperature limits. These same changes are added to Appendix W, Chapter W.8.

3-4 Provide an analysis and/or detailed discussion of the potential thermal effect of transfer operations that take place when the liquid neutron shield on the TC is drained (for transfer of the 32PT DSC). Include a discussion of specific instances when the neutron shield would need to be drained.

Chapter W.8, Page W.8-7 discusses the potential for draining of the liquid neutron shield to meet weight requirements for lower capacity handling crane systems. This condition is not analyzed in the SAR, and a discussion of how this condition is bounded by other analyzed conditions has not been provided.

This information is needed to satisfy the provisions of 10 CFR 72.11 and 10 CFR 72.236(f).

Note: RAI 3-5 and 3-6 apply to the DSC Transfer Analyses contained in SAR Appendix W Section W.4.1

Response to 3-4:

When the loaded, vacuum dried, helium backfilled and cover plates welded 32PT DSC is transferred from the decontamination/cask handling area to the transfer trailer, in order to meet the weight limit on the crane, water in the neutron shield is drained. However, the DSC/TC annulus contains water and provisions are made to replenish the water if necessary during this short term operation and also during any crane or other malfunction. With helium in the DSC cavity and water in the DSC/TC annulus, the fuel cladding temperatures are bounded by the cladding temperatures calculated for vacuum drying conditions.

Chapter W.8, Section W.8.1.4 is revised to add the requirements of provisions for replenishing the annulus water in case of remotely operated devices including crane malfunction.

3-5 Provide a justification for crediting a 100% helium environment in the DSC for the thermal analysis of the cask loading evolution. Add a Technical Specification (TS) that requires the use of helium during DSC blowdown.

Between the removal of the cask from the spent fuel pool, and the completion of the seal weld on the inner lid of the DSC (as described in Chapter 8, for many of the DSC systems), a helium environment is being credited for the thermal analysis. Because the DSC is not leak-tight following the blowdown, there does not appear to be a mechanism to prevent leakage and therefore maintain a 100% helium environment in the DSC. In addition, there is no TS provided to specify the use of helium during blowdown of the DSCs, when the application states that helium is credited (in Section W.4.1) to maintain the fuel cladding below applicable temperature limits.

This information is needed to satisfy the provisions of 10 CFR 72.11 and 10 CFR 72.236(f).

Response to 3-5:

Amendment 10, RAI Response 4-1 addressed this question. Changes made to Operating Procedures in response to Amendment 10 RAI Response 4-1 are also made to Appendix W, Section W.8. Technical Specification 3.1.1 requires the use of helium during the DSC bulk water removal (blowdown or draindown) operations.

3-6 Provide a sensitivity study of the effective conductivity of the OS-197L transfer cask (TC) liquid neutron shield (NS) for both vertical and horizontal orientations and report the results of fuel and DSC temperatures when the DSC is within the transfer cask. Include a discussion of Nusselt numbers calculated for the NS region of the TC.

Values for the effective conductivity of the liquid neutron shield have a direct impact on fuel cladding temperatures. Derivation of these values take into account the geometry of the neutron shield cavity, the temperature difference across the cavity, and the hydrodynamic properties (such as the Nusselt number) of the fluid within the cavity. There is uncertainty in any derivation of effective properties, and thus, the study of the variation in the properties calculated is warranted. The staff's preliminary confirmatory analyses indicate that the Nusselt number for the neutron shield region of the TC is on

the order of 10. The Nusselt number for the shield region will have a direct impact on the effective conductivity calculated for this region. Use of non-conservative conductivity values could lead to an indication of greater heat removal capacity than actually exists in the system. This would lead to an underestimate of the actual DSC and fuel cladding temperatures. A sensitivity study of the impact of this value on the fuel temperature cladding of the DSC will provide the staff with the necessary information to determine if the effective conductivity used for the OS-197L thermal analyses is appropriate.

This information is needed to satisfy the provisions of 10 CFR 72.11 and 10 CFR 72.236(f).

Response to 3-6:

Amendment 10, response to RAI 4-2 addressed the results of Keffective of water in the neutron shield of the Transfer Cask in vertical and horizontal orientation. SAR Appendix T, Section 4.8.5 and Appendix U, Section U.4.8.5 were revised in Response to Amendment 10 RAIs to include the results of the sensitivity studies. Since the geometry of the neutron shield in the OS197L cask is similar to the OS197 cask, the results of the sensitivity analysis are also applicable to the OS197L cask.

Note: RAIs 3-7 through 3-12 apply to the Technical Specifications

3-7 Provide a justification for the removal of the requirement to assess and report the thermal performance of the first DSC placed in service under the applicable amendment (in this case amendment 11). This requirement appears in Amendment 10, TS 1.1.7.

This information is needed to satisfy the provisions of 10 CFR 72.11 and 10 CFR 72.236(f).

Response to 3-7:

Amendment 11 did not add any new Canisters or storage modules to the standardized NUHOMS® System. As allowed by the original Technical Specification 1.1.7 "The NRC will accept the use of artificial thermal loads other than spent fuel, to satisfy the above requirement".

TN performed a full scale thermal test of the HSM-H with a full scale DSC mockup. Heat loads of 32 to 44 kW were used for the thermal test. The methodology employed in the design basis analysis of NUHOMS® HSM-H thermal performance was validated by the full scale testing of the HSM-H for heat loads up to 44 kW. The test report was submitted to NRC (Transnuclear, Inc. Letter to USNRC, "Submittal of Revision 1 of Thermal Test Report of the NUHOMS® Horizontal Storage Module, Model HSM-H (TN Report E-21625) and Revision 4 of Application No. 8 to the NUHOMS® Certificate of Compliance (CoC) No. 1004 (TAC No. L23653), Letter # NUH03-05-06, dated January 14, 2005.

The basic design of the Standardized NUHOMS® System is in use since the first fuel load at the Davis Besse ISFSI in 1995. Since then more than 297 NUHOMS® Systems have been loaded at 17 ISFSI Sites by the Utilities. The basic designs and of the NUHOMS® System components (Horizontal Storage Modules, Dry Shielded Canisters

and Transfer Cask) remains essentially the same through out these amendment processes. Therefore, TS 1.1.7 was requested to be removed from Amendment 11.

3-8 Provide a justification for the removal of the vacuum drying time limits for the 61BT, 32PT, 24PHB, and 24PTH DSCs from the Technical Specifications (TSs). Vacuum drying limits appear in Amendment 10, TSs 1.1.17, 1.1.17a, 1.1.17b, and 1.1.17c.

The staff needs additional technical justification of the thermal performance of DSCs for which vacuum drying time limits are being removed.

This information is needed to satisfy the provisions of 10 CFR 72.11 and 10 CFR 72.236(f).

Response to 3-8:

In Amendment 10, air or nitrogen are allowed for the drainage of bulk water (blowdown or draindown) from the DSC for the 61BT, 32PT, and 24PHB DSCs. The thermal analysis documented in UFSAR Chapters K.4, M.4, and N.4 for the 61BT, 32PT and 24PHB DSCs respectively, required the use of time limit for vacuum drying when using air or nitrogen due to very low conductivity of air or nitrogen in comparison with helium. Note that the 24PTH DSC did not require any time limit as documented in Amendment 8 Technical Specification for vacuum drying as only helium is allowed for water removal.

TN had proposed to add a new Technical Specification 3.1.1 in Amendment 11 which removed the use of air or nitrogen option for the drainage of bulk water from these DSCs and now only helium is allowed for water drain down operation. With helium in the DSC cavity during vacuum drying operations instead of air or nitrogen, the steady state cladding temperatures are below the fuel cladding temperature limits. Therefore, Technical Specifications 1.1.17, 1.1.17a, 1.1.17b, and 1.1.17c are no longer applicable and hence were removed from the proposed technical specifications of Amendment 11.

3-9 Provide a revised definition of TRANSFER OPERATIONS or provide additional clarification of the relationship between TRANSFER OPERATIONS and "time limit for completion of a DSC transfer" in Section 3.1.3 note 3.1-5.

According to Section 1.1, Definitions, (Page 1.1-2) TRANSFER OPERATIONS are defined to "include all licensed activities involving the movement of a TRANSFER CASK loaded with a DSC containing fuel assemblies. TRANSFER OPERATIONS begin when the TRANSFER CASK is placed horizontal on the transfer trailer following LOADING OPERATIONS and end when the DSC is located in an horizontal storage module (HSM) on the storage pad within the ISFSI perimeter."

The note on Page 3.1-5, Section 3.1.3 states: "The time limit for completion of a DSC transfer is defined as the time elapsed in hours after the completion of draining of TC/DSC annulus water and removal of the TC top cover plate for insertion of the DSC into the HSM." This does not appear to agree with the definition given above for TRANSFER OPERATIONS. In addition, these definitions appear to differ from those presented in the NUHOMS® Amendment 10 Technical Specifications.

This information is needed to satisfy the provisions of 10 CFR 72.11 and

10 CFR 72.236(f).

Response to 3-9:

Due to the renumbering of the pages in the Technical Specifications, page 3.1-5 is now page 3-7.

The definition of "TRANSFER OPERATIONS" given in Technical Specification 1.1 is revised to clarify the beginning of "TRANSFER OPERATIONS". This definition is not related or connected to the DSC transfer defined in the note to LCO 3.1.3.

In response to RAIs 12-2 and 12-3 in Amendment 10, TN had revised the definition of "transfer time" in Amendment 10 Technical Specifications 1.2.18, 1.2.18a and 1.2.18b. Amendment 11, Technical Specification 3.1.3 is revised to make it consistent with the Amendment 10 RAI responses.

3-10 Justify the definition of transfer time provided in the note on Page 3.1-5, Section 3.1.3 Technical Specifications.

The "time limit for completion of a DSC transfer" is defined as the time from completion of the draining of the TC/DSC annulus (in the fuel handing building) to removal of the TC top cover plate. This implies that the transfer time does not include the time required to maneuver the DSC trailer up into position, perform the final alignment of the DSC with the HSM door, and actually insert the DSC into the module by means of a hydraulic ram. During this interval, the DSC is still within the TC, and is subject to the heat transfer conditions of transit within additional shielding. If the time required to insert the DSC into the HSM is to be considered negligible, this must be justified.

This information is needed to satisfy the provisions of 10 CFR 72.11 and 10 CFR 72.236(f).

Response to 3-10:

Please see the response to RAI # 3-9 above.

3-11 Provide more detailed description of the alternate means of cooling the transfer cask if forced air circulation is unavailable as described in Section 3.1.3 of the Technical Specifications.

If the transfer time limit is exceeded, the list of possible actions that can be taken includes initiating external cooling of the cask by means of forced air circulation, or "by other means". The thermal analyses described in the SAR do not provide details of any other means of cooling the DSC than natural convection or forced air circulation. The SAR does not describe how the effectiveness of these 'other means' will be evaluated or how much more time they would provide before the fuel cladding temperature limit is reached.

This information is needed to satisfy the provisions of 10 CFR 72.11 and 10 CFR 72.236(f).

Response to 3-11:

In response to RAIs 12-4 in Amendment 10, TN had proposed the deletion of "Initiate appropriate external cooling of the cask outer surface by other means to limit the temperature increase or". Amendment 11, Technical Specification 3.1.3 is revised to make it consistent with the Amendment 10 RAI responses.

3-12 Clarify the meaning of the transfer time limit as defined in the note on Page 3.1-5, Section 3.1.3 of the Technical Specifications.

"The time limit for completion of a DSC transfer is defined as the time elapsed in hours after the completion of draining of TC/DSC annulus water and removal of the TC top cover plate for insertion of the DSC into the HSM." It is unclear whether this means that the time limit starts from the moment the plug on the annulus drain port is replaced after draining, or if it ends when the last bolt on the TC top cover has been removed. The time taken in the process of removing the TC lid should be included in the time limit (if it is not already), as there will be thermal effects on the DSC, because it is in the transfer cask environment for the full duration of this evolution. A general clarification of exactly when the start and finish of the transfer evolution are would aid the staff.

This information is needed to satisfy the provisions of 10 CFR 72.11 and 10 CFR 72.236(f).

Response to 3-12:

In response to RAIs 12-2 and 12-3 in Amendment 10, TN had revised the definition of "transfer time" in Amendment 10 Technical Specifications 1.2.18, 1.2.18a and 1.2.18b. Amendment 11, Technical Specification 3.1.3 is revised to make it consistent with the Amendment 10 RAI responses.

CHAPTER 5 Shielding Evaluation

Note: RAI 5-1 through 5-3 apply to the Certificate of Compliance (CoC)

5-1 Provide materials and nominal dimensions of major radiation shielding features for the various TC designs. The staff believes that this is consistent with the guidance contained on Page 2 of NUREG-1745, "Standard Format and Content for 10 CFR Part 72 Cask Certificates of Compliance." (See RAI 2-3)

This information is required by the staff to assess compliance with 10 CFR 72.11

Response to 5-1:

Page 2 of NUREG-1745 for an example of CoC includes only a very generic description of TC "multi-walled (carbon steel/lead/carbon steel) cylindrical vessel with a water jacket attached to the exterior". It does not include any nominal dimensions. The description given in CoC 1004 for the TC is consistent with this guidance. Note that a new Technical Specification TS 5.2.4.e is added to require measurement of the Transfer Cask dose rate.

5-2 Add a Condition to the proposed CoC that general licensees using the OS197L TC must handle the bare TC using a single-failure proof crane. The staff believes that lifting the light-weight transfer cask with a non-single failure proof crane could more likely lead to scenarios that are hard to recover from without exceeding occupational dose limits.

This information is required by the staff to assess compliance with 10 CFR 72.11

Response to 5-2:

The Heavy Loads Program requirement is being added as CoC Condition 6 in response to RAI 9-19. The trunnions on the OS197L TC are designed to meet the requirements of ASME/ANSI N14.6 code allowables including load testing.

Transnuclear also recommends the use of single failure proof crane for the movement of OS197L TC and supplemental shielding inside the fuel building. However, TN believes that this requirement should not be imposed in 10CFR72 Technical Specifications for the following reasons:

- Any lifting inside the fuel building is subjected to the plant's heavy loads program under the requirements of 10CFR50 and is not a part of 10CFR72 regulations. This is also consistent with NUREG-1745.
- Requirements for lifting and handling of the OS197L TC outside the fuel building are already included in Technical Specification 5.3.1.A fourth bullet.
- If a single failure proof crane is not used inside the fuel building then the general licensee will have to evaluate drop accidents inside the fuel building under 10CFR50.59 and 10CFR 72.212 and evaluate the consequences.

5-3 Revise CoC Condition 3.d, "Basic Components," to list the supplemental shielding (for the OS197L TC) on the transfer trailer and in the decontamination area as important to safety. This is consistent with other important to safety equipment that is listed in this CoC Condition. Additionally, SAR Table W.2-1 classifies the trailer shielding as

important to safety.

This information is required by the staff to assess compliance with 10 CFR 72.11

Response to 5-3:

CoC Condition 3.d, "Basic Components" list the major components of NUHOMS System on a global level. They are not intended to list every item that is important to safety like the supplemental trailer shield on the transfer trailer during TRANSFER OPERATIONS. Note that technical specification 4.4.2 already requires the use of supplemental shielding like the trailer shields and decontamination area shields for all loading and transfer operations when the OS197L TC is not in the pool or suspended on the crane. Also, Technical Specifications 4.2.3, 4.4.4 and 4.4.5 are also either revised or added to list the Supplemental Trailer Shield.

The Supplemental Trailer shielding is used for ALARA purpose only. The trailer shielding is not credited during any of the 10CFR72 accidents, including the dose rates after loss of neutron shielding and cask drops, and dose rates are below the 10CFR72.106 limits for accident conditions. NUREG-1536 defines Important to Safety as a "function or condition required to store spent fuel of high level waste safely. To prevent damage to the spent fuel or the high level waste container during handling and storage, to provide reasonable assurance that that sent fuel or high level radioactive waste can be received, handles, packaged, stored and retrieved without undue risk to the health and safety of the public." The supplemental Trailer Shield does not meet these requirements.

Since we have already revised the proposed Technical Specifications (which carry the same regulatory requirements for any changes via 10CFR72.48 process as the CoC) to incorporate the trailer shielding for the OS197L cask, its inclusion in the CoC also is not necessary.

See response to RAI 5-25 discussion for Decontamination Area Shielding.

Note: RAI 5-4 through 5-14 apply to the Technical Specifications

5-4 Clarify the definition of TRANSFER CASK.

The technical specifications define the TRANSFER CASK (TC) as the "...TC (Standardized TC, OS197, OS197H, OS197L, OS197FC, OS197FC-b, OS200, OS200FC TC or other models enveloped by these designs)..." Delete the text "or other models enveloped by these designs". Additionally, add text describing the supplemental shielding that must be used with the OS197L TC. Also specify which DSCs may be used in each TC.

This information is necessary to verify compliance with 10 CFR 72.11.

Response to 5-4:

The definition of TRANSFER CASK is revised to delete the text "or other models enveloped by these designs". Technical Specification 4.4.2 already requires the use of temporary shielding like the trailer shields and decontamination area shields for all loading and transfer operations when the OS197L TC is not in the pool or suspended on

the crane. Technical Specifications 4.2.3, 4.4.3 and 4.4.4 are also either revised or added to list the Supplemental Trailer Shield. Therefore, including the supplemental shields would be redundant.

The UFSAR lists which DSCs may be used in each TC. This level of details is not necessary in the definition section of TC.

5-5 Clarify the definitions of LOADING OPERATIONS and TRANSFER OPERATIONS.

Specify whether LOADING OPERATIONS or TRANSFER OPERATIONS include down-ending of the TC onto the transfer trailer. Clarify whether there is a period of time that may exist between the end of LOADING OPERATIONS and the beginning of TRANSFER OPERATIONS (i.e., revise the definition of TRANSFER OPERATIONS to include down-ending of the transfer trailer.) Preferably, no such period of time may exist.

This information is necessary to verify compliance with 10 CFR 72.11. Also see the guidance in NUREG-1745.

Response to 5-5:

The definition of LOADING OPERATIONS is revised to include the down-ending of the TC onto the trailer.

5-6 Revise TS 4.3 to require the system user to perform the verifications and evaluations in accordance with 10 CFR 72.212.

This information is necessary to ensure compliance with 10 CFR 72.236.

Response to 5-6:

Technical Specification 4.3.3 is revised to add "The potential Standardized NUHOMS System user (general licensee) shall perform the verifications and evaluations in accordance with 10 CFR 72.212 before the use of the system under the general license."

5-7 Revise TS 4.4 to specify the following (or other appropriate technical specifications):

a. Specify that a single-failure proof crane must be used for all movements of the bare OS197L TC and its supplemental shielding. If this is not specified in the TS, an accident analysis must be presented in Chapter W.11 analyzing drops of the supplemental shielding (in both the decontamination area and on the trailer) on the OS197L TC.

b. Section W.5.3 states that, during normal operations, use of the OS197L TC is not expected to have any significant adverse impact on personnel dose rates since crane operations will be performed remotely. Specify in TS 4.4 that remote operations, including the use of a laser/optical targeting system and cameras for confirmation of the cask location without the need for personnel in the vicinity of the cask, are to be used at all times that the OS197L TC is not shielded by temporary shielding (e.g., during the lift from the pool to the decontamination

area, and also during transfer from the decontamination area to the transfer trailer). Additionally, specify that users of the OS197L TC must have contingency procedures in place, prior to loading the OS197L TC with fuel, in case of failure of the remote operations. (See RAI 5-42)

c. Provide specifics (such as condition of use, design criteria, and operational parameters) regarding the use of the decontamination area and trailer supplemental shielding for the OS197L TC. State that this shielding must be used at all times that remote operations are not in use.

d. Chapter W.8 indicates that an interim cask cover may be installed on the OS197L TC during downending. Revise TS 4.4 to address the conditions under which the interim cask cover may be used (state that the interim cask cover may not be used unless necessary due to weight constraints), and state that the interim cask cover must be replaced with the standard cask top cover. If necessary, due to the dose analysis of the interim cask cover, specify a time limit for how long the interim cover may be installed.

e. Chapter W.8 indicates that placement of the outer trailer shield may be delayed for some period of time, due to load limits within the building. Revise TS 4.4 to address the conditions under which the placement of the outer trailer shield may be delayed (state that the placement of the outer trailer shield may not be delayed unless building load limits would be exceeded). Specify a time limit, based on the surface and 100-meter dose rates (see RAI 5-31) for completing placement of the outer trailer shield once the trailer exits the building.

f. If a period of time may exist between LOADING OPERATIONS and TRANSFER OPERATIONS, specify that the OS197L TC must be either shielded by temporary shielding or used in conjunction with remote operations during this time. Preferably, no such space of undefined time would exist between LOADING OPERATIONS and TRANSFER OPERATIONS (see RAI 5-5).

g. Include the caution on Page W.8-11 regarding monitoring of the outer top trailer shield vents and the openings around the cask ends for signs of steaming. Include a time limit for taking the appropriate corrective actions. This information is necessary to assure compliance with 10 CFR 72.236.

Response to 5-7:

a. As described in the response to RAI 5-2 above, Transnuclear also recommends the use of single failure proof crane for the movement of OS197L TC and supplemental shielding inside the fuel building. However, TN believes that this requirement should not be imposed in 10CFR72 Technical Specifications. The accidental drop of the Outer Top Trailer shield is evaluated in Appendix W.11.1.5. Appendix W.8 is also revised to add the limitations on the lifted height of the outer top trailer shield.
b. A new Technical Specification 4.4.3 is proposed to add requirements for remote operations. Technical Specification 5.2.4 contains the requirements for preparing contingency procedures before the use of OS197L TC.
c. The decontamination area and trailer supplementary shielding are designed to resist the normal operating dead weight and handling loads in accordance with the requirements of the ninth Edition of AISC (Manual of Steel Construction, Allowable Stress Design). See responses to RAI 5-3 and RAI 5-25 for additional details on the supplemental shielding.

d. Technical Specification 4.4.4 is added to include this requirement. The dose analysis documented in Section W.5 in Response to RAI 5-21 shows that no time limit is required for how long the interim cover may be installed as the doses at 100 meters from the OS197L cask are less than 0.3 mrem/hour. Note that this shielding analysis does not take any credit for shielding provided by the decontamination area or fuel building structure.
e. Technical Specification 4.4.5 is added to include this requirement. The dose analysis documented in Section W.5 in Response to RAI 5-21 shows that no time limit is required for how long the Outer Top Trailer Shield of the Trailer Shielding may be installed.
f. Technical Specification 4.4.2 requires the use of OS197L TC with supplemental shielding when the OS197L TC is not in the pool or suspended on the crane. Technical Specification 4.4.3 requires the use of remote operations.
g. Technical Specification 4.4.6 is added to include this requirement.

5-8 Revise TS 5.2.2 to include the loading operations as described in Chapter W.8.

Several loading operations chapters are listed in TS 5.2.2; however, those described in Chapter W.8 have been omitted. Revise TS 5.2.2 to include the loading operations as described in Chapter W.8.

This change is necessary to satisfy the requirements of 10 CFR 72.11.

Response to 5-8:

The Technical Specification 5.2.2 is revised to include Chapter W.8.

5-9 Revise the dose assessment described by TS 5.2.4(a) to address the following:

a. Account for occupational exposures during TRANSFER OPERATIONS and any period of time that may exist between LOADING OPERATIONS and TRANSFER OPERATIONS (see RAI 5-5)

b. Account for occupational and public exposures from off-normal and accident conditions

c. An ALARA assessment to verify that licensee use of the OS197L (versus upgrading the crane) is consistent with ALARA principles. TS 5.2.4(a) should specify that the ALARA assessment should include assessment of occupational and public exposures associated with (but not necessarily be limited to) the following:

1. normal and off-normal conditions
2. malfunction of remote handling equipment
3. crane hang-up during movement of OS197L from the spent fuel pool to the decontamination area
4. crane hang-up during movement of OS197L from the decontamination area to the transfer trailer
5. surface and 100-meter dose rates on the transfer trailer without the outer trailer shielding in place
6. worker doses associated with use of the interim cask cover

7. worker doses associated with visual inspection off the openings at the top and bottom of the decontamination area

e. Assess whether use of the OS197L (in normal, off-normal, or accident conditions) may set off radiation alarms in the fuel handling building

f. Assess whether use of the OS197L (in normal, off-normal, or accident conditions) may impact any plant operations requiring access to the fuel handling building or other locations at the facility critical to protecting public health and safety, including the control room.

g. Add a discussion of the remote operations that must be used with the OS197L TC. Specify when remote operations must be used, whether redundant trains of equipment are necessary, and whether there are any quality standards for the remote handling equipment.

These changes are necessary to ensure compliance with 10 CFR 72.236(d).

Response to 5-9:

Technical Specification 5.2.4 is revised to add the requirements requested in this RAI.

5-10 Revise TS 5.2.4.d to require the check of the smearable surface contamination levels to occur prior to welding the DSC.

TS 5.2.4.d indicates that if the surface contamination levels are not met, the user is to "...remove the fuel assemblies from the DSC and put them back in the fuel pool..." If the user may need to remove the fuel assemblies, the smearable surface contamination levels should be checked prior to welding the DSC. Additionally, an early check of the surface contamination levels will help to ensure that occupational doses remain ALARA.

This information is necessary to ensure compliance with 10 CFR 72.236.

Response to 5-10:

Technical Specification 5.2.4.d is revised to require this check before the welding on the DSC shell.

5-11 Revise TS 5.3.1 to clarify the applicability of 10 CFR Parts 50 and 72.

TS 5.3.1 states "The requirements of 10 CFR Part 72 apply outside the FUEL BUILDING. The requirements of 10 CFR Part 50 apply inside the FUEL BUILDING." Clarify that this statement is only valid with respect to lifting/handling height limits.

This revision is necessary to ensure compliance with 10 CFR 72.11.

Response to 5-11:

Technical Specification 5.3.1 is revised to clarify this requirement.

5-12 Revise TS 5.3.2 to address drops of the supplemental shielding for the OS197L TC.

Revise the technical specification to address required inspections of the DSC after drops of the supplemental shielding onto the OS197L TC.

This revision is necessary to comply with 10 CFR 72.236.

Response to 5-12:

TS Section 5.3.4 has been added to require inspection for damage and evaluation of the DSC and TC for further use in the event of an accidental drop of the supplemental shield onto the OS197L TC itself.

5-13 Justify why TS 5.4.1 allows the HSM front surface dose rate limits to be measured at 3 feet from the HSM front surface. Similarly, justify why no dose rate limit is specified on the HSM front surface for the 24P, the 52B, and the 61BT DSCs in TS 5.4.2.

TS 5.4.1 states that the HSM front surface dose rates may be measured at 3 feet from the HSM front surface. Table 5.4.2 provides HSM front surface dose rate limits for all DSC models excepting the 24P, the 52B, and the 61BT. As stated in the guidance provided in NUREG-1745, "Standard Format and Content for Technical Specifications for 10 CFR Part 72 Cask Certificates of Compliance," the administrative controls are to include a cask loading, unloading and preparation program that establishes criteria that need to be verified to address FSAR commitments and regulatory requirements. These criteria include surface dose rates to assure proper loading and consistency with the offsite dose analysis.

This information is necessary to ensure compliance with 10 CFR 72.236.

Response to 5-13:

Note (1) on the "HSM Front Surface" column was added to clarify that for only the 24P, 52B and 61BT DSCs, the value of 400 mrem/hour corresponds to the value at 3 feet from the HSM front surface. The general licensee has to measure the dose rate at 3 feet from the HSM front surface of the loaded module and compare the measured value against the 400 mrem/hour requirement included here for the 24P, 52B and 61BT DSCs.

The Technical Specification 5.4.1 also includes the dose rate limits on the surface of the HSM door and HSM end shield wall exterior surface. TS 5.4.1 dose rate limits for the 24P, 52B and the 61BT DSCs were established prior to the publication of NUREG-1745. Several 24P, 52B and 61BT NUHOMS® systems have been loaded at various ISFSI using these Technical Specifications on dose rate limits. From a technical standpoint, dose rates measured at 3 feet from the HSM surface along with the dose rates on the HSM door and the HSM end shield wall exterior surfaces are equally effective to "assure proper loading and consistency with the offsite dose analysis." as suggested by NUREG-1745. Therefore, it is requested that the TS 5.4.1 dose rate limits for these three DSCs continue to be measured at 3 feet from the HSM surface.

5-14 Revise TS 5.4.3 to indicate that each of the actions described in 5.4.3 (a-c) should be taken to achieve compliance.

TS 5.4.3.a states, "Ensure proper installation of the HSM door, or" and TS 5.4.3.b states

"Administratively verify ..., or." The corresponding Amendment 10 technical specification (TS 1.2.7) does not contain the "or" logic for each of these actions. Each action should be performed to ensure compliance with the technical specification. Additionally, consider revising TS 5.4.3.a to instruct the user to check for streaming after ensuring proper installation of the HSM door.

This information is necessary to ensure compliance with 10 CFR 72.236.

Note: RAI 5-15 through RAI 5-17 apply to the main safety analysis report Chapters

Response to 5-14:

Technical Specification 5.4.3 is revised to add "AND" for actions a through c and also added requirement to check for streaming.

5-15 Clarify the description of the on-site TC in Sections 3.1.2.1, 4.2.3.3, and 4.7.3.2. Clarify other sections that describe the on-site TC, as necessary.

Section 3.1.2.1 describes the on-site TC as providing "neutron and gamma shielding adequate for biological protection at the outer surface of the cask." This statement does not apply to the OS197L TC, which must be used in conjunction with remote handling and additional shielding to provide adequate biological protection.

Section 4.2.3.3 states "the transfer cask provides the principal biological shielding ... for the DSC and SFAs during handling in the fuel/reactor building, DSC closure operations, transport to the ISFSI, and transfer to the HSM." This statement does not apply to the OS197L, which relies on the use of remote operations in conjunction with supplemental shielding during handling, transport, and transfer operations to provide biological shielding.

Section 4.2.3.3 states "The transfer cask may be fitted with a shielded collar to extend the cask cavity length to accommodate the longer NUHOMS -52B DSC..." However, Appendix W (which describes the OS197L TC and lists the NUHOMS -52B DSC as a DSC that the OS197L is designed to accommodate) does not address use of the shielded collar. Clarify whether the statement in Section 4.2.3.3 applies to the OS197L TC.

Section 4.2.3.3 states "The transfer cask is constructed from three concentric cylindrical shells to form an inner and outer annulus. These are filled with lead..." This description is not applicable to the OS197L TC, which does not contain any lead.

Section 4.7.3.2 states "The [transfer] cask's cylindrical walls are formed from three concentric steel shells with lead poured between the inner liner and the structural shell to provide gamma shielding during DSC transfer operations." This description is not applicable to the OS197L TC, which does not contain any lead.

This information is necessary to ensure compliance with 10 CFR 72.11.

Response to 5-15:

As noted in FCN 721004-321 Rev. 2, UFSAR Section 3.1.2.1 was revised to indicate that Appendix W provides the detailed description of the OS197L TC.

UFSAR Section 4.2.3.3 has been revised to describe that the OS197L TC relies on the use of remote operations in conjunction with supplemental shielding during handling operations, transport to the ISFSI, and DSC transfer into the HSM operations to provide biological shielding, and to point to Appendix W for detailed description of the OS197L transfer cask system and to Appendix W, Section W.1.5 for the drawings of the OS197L and the supplemental shielding.

Section 4.2.3.3, second paragraph, first sentence, has been revised as follows: *"The standardized (with solid neutron shield) transfer cask...."* to indicate that the collar extension applies only to the Standardized Transfer Cask.

Additional clarifications have been made in Sections 4.2.3.3 and 4.7.3.2 to address the differences in the OS197L relative to the Standardized or the OS197 TC.

5-16 Justify that the design and use of the OS197L TC is consistent with ALARA principles. (See RAI 8-5)

The conclusion that use the design of the NUHOMS DSC and HSM comply with ALARA requirements is predicated on the following statements in Section 7.1-2:

"Features of the NUHOMS system design that are directed toward ensuring ALARA are ... Use of a heavy shielded transfer cask for DSC handling and transfer operations to ensure that the dose to plant and ISFSI workers is minimized."

"Fuel loading procedures which follow accepted practice and build on existing experience."

These statements are not applicable to the OS197L TC, which is not heavily shielded, and relies on the use of remote operations in conjunction with supplemental shielding in order to minimize dose to plant and ISFSI workers. Therefore, the design and use of the OS197L appears to contradict conclusions reached in Section 7.1.2 that ALARA principles are followed.

This information is necessary to ensure compliance with 10 CFR 72.236(d).

Response to 5-16:

The OS197L TC is designed to provide adequate structural, thermal and radiation protection to the DSC and its contents. In addition, the OS197L TC is designed to maintain dose rates ALARA on and around the TC during loading and transfer operations. This includes selection of appropriate shielding geometry, materials, supplemental shields and remote handling devices as documented in the Technical Specifications and UFSAR Appendix W.

The methodology for performing an ALARA evaluation during the design of the OS197L TC is outlined below:

- Identify various design requirements of the OS197L TC,
- determine the limiting design features that are absolutely necessary to maintain the "protection" functions of the OS197L TC,

- determine if there is additional allowance in design to enhance ALARA if available, then identify alternate material and geometric designs for this purpose, and
- perform sensitivity shielding calculations to determine the effect of alternate designs, and implement the design that results in dose rates ALARA and also satisfies the requirements of other disciplines.

The primary design requirements of the OS197L TC are:

The maximum weight of the TC and its contents shall be below 75 Tons, the minimum inner diameter of the TC is approximately the same as that for the OS197 TC – 68 inches, and use of liquid neutron shield to satisfy the 32PT DSC thermal performance requirements.

The limiting design features that are absolutely necessary to maintain the "protection" functions of the OS197L TC are listed below:

The UFSAR requires that the TC (based on the OS197 TC design) is designed with, at a minimum, a stainless steel inner shell with a thickness of 0.5 inches and a stainless steel outer shell with a thickness of 1.5 inches, to provide adequate structural protection. The two-piece neutron shielding design of the OS197L TC requires a total stainless steel thickness of 0.45 that includes the inner and outer neutron shield shells.

Since the design of the OS197L TC contains a stainless steel thickness of 2.68 inches for the inner shell and structural shell (excluding the neutron shielding steel thickness), only 0.68 inches of steel (or material equivalent by weight) is available to enhance ALARA. Due to the requirement of enhanced gamma shielding, the materials for consideration are steel and lead. The OS197L TC design consists of a single stainless steel shell with a thickness of 2.68 inches that provides structural and radiation protection of the DSC and its contents.

Design Alternative Considered for OS197L TC

Based on meeting the required structural and thermal performance requirements described above, an alternative design of the OS197L TC can be conceptualized for enhancing ALARA. For this alternative design, the TC could consist of a stainless steel inner shell with a thickness of 0.5 inches, a lead gamma shield shell with a thickness of 0.45 inches (maximum) and a stainless steel outer shell with a thickness of 1.5 inches. This alternate design is equivalent to the current design of the OS197L TC (Configuration "B" in Calculation NUH06L.0500) from a weight standpoint.

Sensitivity calculations were performed to determine the effect of lead thickness on the dose rates for the OS197L TC with the 32PT DSC. Two configurations were investigated: one with a lead shell thickness of 0.50 inches (configuration "A" in Calculation NUH06L.0500) and another with a lead shell thickness of 0.75 inches (configuration "C" in calculation NUH06L.0500). Both these configurations considered an inner steel shell with a thickness of 0.5 inches and an outer steel shell with a thickness of 1.5 inches. Due to the relatively insignificant contribution of the neutron dose rates to the total dose rates, only the results from the gamma dose rates calculations are utilized to perform the dose rate comparison for these different configurations. The results for these sensitivity calculations are obtained from Table 8 of Calculation NUH06L.0500 and are shown below:

Configuration A, Gamma Dose rate = 86.3 rem/hour
Configuration B, Gamma Dose rate = 95.6 rem/hour
Configuration C, Gamma Dose rate = 47.7 rem/hour

As concluded in calculation NUH06L.0500, Configuration C provides the best option for shielding as the dose rates are approximately 50% of those from either Configuration A or Configuration B. However, Configuration C that results in the lowest dose rates is not considered for ALARA enhancement because the thickness of lead far exceeds the maximum allowable thickness of 0.45 inches to meet the weight requirement. The steel thickness would have to be reduced below 2" to meet the weight and therefore does not meet the structural performance requirements.

The results for Configuration A indicate that the dose rates with a lead thickness of 0.5 inches are only slightly lower (approximately 10%) than that for Configuration B. A simple exponential extrapolation for lead thickness indicates that the dose rates with a lead thickness of 0.45 inches are expected to be within the same range as those for Configuration B. These dose rates are calculated assuming that the density of lead within the TC at 100% of theoretical density with no porosity. In actual practice, porosity free pouring of lead at a thickness of 0.45 inches or less over a 150 inch length is difficult to achieve and will likely result in an effective lead thickness of 0.40 inches or lower due to lead pouring effectiveness and/or lead slump assumptions. Also, pouring of lead in a 0.45" cavity causes fabrication challenges and is not normally recommended.

In addition, use of a three shell configuration (inner, lead and outer) results in the degradation of the thermal performance of the TC due to introduction of additional thermal resistance introduced by the presence of extra gaps between the various "layers" or shells.

In conclusion, during the design phase of the OS197L TC, various design options were considered. The design option with 2.68" of shielding was selected for the OS197L TC because it resulted in a optimum cask design for the thermal, structural, shielding and fabrication disciplines.

In order to keep the dose rates ALARA, the planned operations and implementation at the general licensee were very carefully considered. The ALARA requirements of 10 CFR 72.104(b) deals with the radioactive materials in effluents and direct radiation levels associated with ISFSI or MRS operations. There are no effluents associated with the OS197L TC. The direct radiation levels from the OS197L TC are even lower than those of the regular weight OS197 TC with the use of supplemental shielding in the decontamination area and on the transfer trailer and use of remote handling equipments. Regulatory Guide 8.8 includes the specific objectives for radiation dose managements in:

1. Establishing a program to maintain occupational radiation exposures ALARA; 2. Designing facilities and selecting equipment; 3. Establishing a radiation control program, plans, and procedures; and 4. Making supporting equipment, instrumentation, and facilities available.

These above requirements are applicable for the general licensee when selecting the use of OS197L TC at their ISFSI. The OS197L TC design is based on the use of supplemental shielding in the decontamination area and on the transfer trailer along with

remote operations when handling bare OS197L TC. With the use of these supplemental shields and remote operations, the dose rates on the surfaces of these shields are lower than the full weight transfer cask as demonstrated when the OS197L TC was used to load four DSCs at Fort Calhoun Station of OPPD. The occupational exposures for loading 4 canisters were lower than what would be expected with a full weight transfer cask.

The movement of the bare OS197L TC is performed with the use of remote handling equipment and an optical targeting system with remote camera monitoring due to high dose rates to keep occupational exposures ALARA. The time in transit with no temporary shielding on the OS197L TC is minimal and operations are performed remotely. The bare OS197L TC is only handled inside the fuel pool area and decontamination/fuel building area. Although a single failure proof crane is recommended for the movement of the bare OS197L TC, the movement of the bare OS197L TC is governed under the plant's heavy loads program. The general licensee is required to meet the specific radiation protection requirements of the technical specifications before and during the use of the OS197L TC. The dose assessment by the general licensee includes recovery from a potential malfunction of the remote handling devices.

The user is required to provide appropriate training for the personnel performing these operations. They are also trained on possible repair/recovery operations. Dry runs are performed before the actual fuel load for the workers to train the workers, build experience and identify any process improvements. These remote operations follow accepted practice and build on existing experience. Therefore, ALARA principles are implemented in the design, planned operation and implementation of the OS197L TC.

5-17 Revise SAR Chapter 10 to provide a cross-reference index of the technical specification bases in the Amendment 10 CoC and their current location in the SAR that supports Amendment 11 to CoC 1004.

The location of all the information previously included in the Tech Spec bases is not easily determined in the revised SAR.

This information is necessary to verify compliance with 10 CFR 72.11.

Note: RAI 5-18 through 5-55 apply to SAR Appendix W of the Amendment 11 application.

Note: RAI 5-18 through RAI 5-22 apply to Chapter 1, "General Description" of SAR Appendix W.

Response to 5-17:

Information is added to SAR Chapter 10, including a cross-reference index of the technical specification bases in the Amendment 10 CoC and their current location in the SAR that supports Amendment 11 to CoC 1004.

5-18 Clarify which DSCs may be loaded into the OS197L TC.

a. Clarify whether the OS197L TC accommodates the NUHOMS -52B DSC. Section 4.2.3.3 states "The transfer cask may be fitted with a shielded collar to

extend the cask cavity length to accommodate the longer NUHOMS -52B DSC..." However, Appendix W does not address use of the shielded collar.

b. Reconcile the apparently conflicting statements: Chapter W.1 states that the OS197L TC accommodates the 24P, 52B, 24PT2, 61BT, 32PT, and 24PHB DSCs. However, the statements on Pages W.3-1, W.4-1, and W.5-1 indicate that the OS197L TC accommodates "DSCs currently licensed under CoC 1004," which includes other DSC designs not listed in Chapter W.1. This information is necessary to ensure compliance with 10 CFR 72.11.

Response to 5-18:

a. The OS197L TC is also designed to accommodate the NUHOMS-52B DSC. The text of SAR Section 4.2.3.3 regarding the addition of a shielded collar to the transfer cask to accommodate 52B DSC is applicable to the Standardized Cask *only* which is a shorter length transfer cask. UFSAR Section 4.2.3.3 is revised to provide this clarification.

b. The statement in Chapter W.1 is correct where all the currently licensed DSCs with a heat load of 24 kW or less are listed. The statements on SAR pages W.3-1, W.4-1, and W.5-1 are revised to say that the OS197L TC accommodates all "currently licensed DSCs with a heat load of 24 kW or less".

5-19 Clarify Section W.1.2 regarding the general description of the TC.

Section W.1.2 states, "The OS197L TC ... provides shielding and protection from potential hazards during the DSC fuel loading/unloading operations..." However, the OS197L TC does not provide shielding and protection unless it is used in conjunction with remote handling operations and supplemental shielding. Further, this section references Figure W.1-1, which shows the OS197L TC. This figure does not show the additional shielding that must be used in the decontamination area or on the transfer trailer. Revise Section W.1.2 to reflect the fact that the OS197L TC, used on its own, does not provide adequate shielding.

Additionally, clarify that item 2 on Page W.1-3 refers to shielding on the OS197L TC support skid.

This revision is necessary to ensure compliance with 10 CFR 72.11.

Response to 5-19:

SAR Section W.1.2 is revised to add the clarification that the OS197L TC, when used in conjunction with the supplemental shielding provided (see Figures W.1-2 and W.1-3) and the remote handling procedures (described in SAR Chapter W.8), provides shielding and protection from potential hazards during the DSC fuel loading/unloading operations.

In addition, the last paragraph of SAR Section W.1.2 is revised to clarify that Figure W.1-1 provides an overview of the bare OS197L TC without the supplemental shielding.

Bullet 2 on Page W.1-3 of the SAR is revised to provide the requested clarification.

5-20 Revise Section W.1.2.2 to indicate that the OS197L TC must be shielded by supplemental shielding at all times that remote handling operations are not in use.

"Lifting Cask from Pool" in Section W.1.2.2 describes the differences in primary operations for the OS197L TC as compared to the operations described in Section 1.3.3 of the main SAR. This includes a description of the use of remote crane operations. However, this section does not mention the decontamination area supplemental shielding, which must be used to maintain doses ALARA during all operations, that are not performed remotely, within the fuel handling building (not including those operations involving the TC on the transfer trailer, which has additional shielding).

This information is necessary to ensure compliance with 10 CFR 72.11, 72.230(a), and 72.236(d).

Response to 5-20:

SAR Section W.1.2.2 is revised to provide the requested clarification regarding the use of decontamination area shielding.

5-21 State whether a time limit exists for how long the OS197L TC may be in place on the transfer trailer without the outer top additional shielding installed.

Section W.1.2.2 states "The outer top additional shielding is to be installed inside the fuel handling building if the floor loads can accommodate it (if floor loading is a concern, the additional shielding may be placed on the skid outside the fuel handling building). It does not appear a time limit exists for how long the OS197L TC may be in place on the transfer trailer without the outer top additional shielding installed. Additionally, there does not appear to be a dose assessment that was performed to verify that doses will be within the limits of 72.104 (see RAI 5-31). A time limit should be established to ensure worker doses remain ALARA and public doses remain within the limits of 10 CFR 72.104. This time limit should also be addressed in Section W.8 and in the technical specifications.

This information is necessary to ensure compliance with 10 CFR 72.236(d).

Response to 5-21:

No time limits are required for transfer of DSC without outer trailer shield, based on the following:

Additional calculations are performed without the outer top trailer shield to calculate the dose rates as a function of distance from the OS197L TC with only the inner top trailer shield in place outside the decontamination area. The results show that the dose rates are 0.26 mrem/hr at 100 meters. The outer top trailer shield is normally installed within four hours after the cask is moved outside the decontamination area.

The 0.26 mrem/hr dose rate is based on conservative methodology using conservative assumptions and design basis source terms. Measured dose rate data from numerous loaded ISFSIs have confirmed the conservative nature of the shielding analysis methods where factors of 2 to 10 are observed between measured vs. calculated dose rates. Therefore, the actual measured dose rates at 100 meters from the OS197l TC without

the outer top trailer shield are expected to be even less than the calculated 0.26 mrem/hr.

The general licensee is required to perform a 10CFR72.212 evaluation to confirm that they meet the requirements of 10CFR72.104 and 10CFR72.106 during the use of OS197L TC at their ISFSI site. These evaluations will determine if any additional measures are needed to meet the requirements of 10CFR72.104 and 10CFR72.106.

Appendix W.5 of the SAR is revised to include the dose analysis without the outer top trailer shield. The proprietary dose calculation along with the appropriate input/output computer run files is also included with the submittal.

5-22 Justify why fabrication of the transfer trailer and the decontamination area supplemental shielding will not also be performed by one or more qualified fabricators under TN's quality assurance program.

Section W.1.3 states that fabrication of the OS197L TC will be done by one or more qualified fabricators under TN's quality assurance program. Figure W.1-1 shows that the OS197L TC does not include the transfer trailer and the decontamination area supplemental shielding, therefore it is not clear that these components will be fabricated under TN's quality assurance program.

This information is necessary to satisfy the requirements of 10 CFR 72.144.

Response to 5-22:

The drawings of the supplemental trailer and decontamination area shields are included in the SAR Appendix W.1. The fabrication of the OS197L TC supplemental shields will be fabricated under the appropriate quality procedures of the TN's quality assurance program.

Note: RAI 5-23 through 5-25 apply to SAR appendix W Section W.2, "Principal Design Criteria"

5-23 Revise Section W.2.2 to address the discussion in Chapter W.8.

Page W.2-1 states that the "... OS197L TC is handled and utilized in the same manner as the existing ... OS197 TC System." This does not appear to be consistent with the Operating Procedures in W.8, as there are several differences noted. For example, discuss the drainage of the DSC during the lift from the pool, the remote crane handling operations, any differences in handling/utilization with regards to decontamination operations, and the use of supplemental shielding in the decontamination area and on the transfer trailer.

This information is necessary for compliance with 10 CFR 72.11.

Response to 5-23:

Section W.2 (on page W.2-1) is revised to clarify that the OS197L TC is "in general" handled and utilized in the same manner as the existing OS197 TC system and provided a bulletized list of the differences in operation/handling of the OS197L TC.

5-24 Revise Section W.2.3.5, "Radiological Protection," to address the discussion in Chapter W.10.

The statement that there is "no change" for the OS197L in Section W.2.3.5 appears to be inconsistent with the analysis of a failure of the remote handling equipment provided in Chapter W.10, "Radiation Protection." Further, there are changes in the radiological protection with respect to the use of remote handling equipment and supplemental shielding in the decontamination area and on the transfer trailer.

This information is necessary to demonstrate compliance with 10 CFR 72.11.

Response to 5-24:

Section W.2.3.5 is revised to reference the remote handling and supplemental shielding used in conjunction with the OS197L TC.

5-25 Justify why Table W.2-1 does not classify the decontamination area shield as important to safety, when the transfer trailer shielding is classified as such.

The supplemental shielding in the decontamination area is being used as an integral part of the OS197L transfer system during loading, in a similar manner as the bare transfer cask. The shielding is required by general licensees to meet the requirements of 10 CFR 72.104(a) regarding the dose limits for normal conditions of operation. Supplemental shielding used to meet the requirements of 10 CFR 72.104(a) regarding the dose limits for normal conditions of operation should be classified as important to safety. Table W.5-1 indicates that the 100-meter dose rate from the bare OS197L TC is 4.53 mrem/hr. 10 CFR 72.236(d) requires the cask system to meet the requirements in 10 CFR 72.104. Therefore, without the supplemental shielding in place, and depending on the layout of the fuel handling building with respect to the controlled area boundary, the limits of 10 CFR 72.104 may be exceeded at 100 meters in less than 6 hours for loading of a single cask, and the limits of 10 CFR 20.1301(a) may easily be challenged.

As indicated in Interim Staff Guidance - 13, "Real Individual," at least 20 casks should be considered when evaluating compliance with 10 CFR 72.104.

Additionally, Figure W.1-2 illustrates how the Decontamination Area Shielding surrounds the OS 197L TC but since there are no detailed drawings, it is unclear what the configuration of the TC bottom to the lower cask shield interface is and there is no discussion regarding the behavior of the assemblage under all loading scenarios. It is noted that on Page W.8-5 it is stated that the shielding will be nominally 6" of carbon steel.

Finally, in Section W.1.1, it is stated that the additional shielding in the decontamination area is required because of the configuration of the OS197L TC. Removal of shielding from the body of the TC, an Important to Safety component, does not necessarily make the shielding Not Important to Safety.

Therefore, the decontamination area supplemental shielding should be classified as important to safety.

This information is necessary to satisfy the requirements of 10 CFR 72.236(b) and 10 CFR 20.1301(a).

RAI 5-26 applies to SAR Appendix W Chapter W.3, "Structural Evaluation"

Response to 5-25:

The supplemental shielding in the decontamination area is used only during the draining, drying, sealing and testing portions of the fuel transfer inside the fuel building or cask decontamination area. Once the DSC has been sealed and is ready for transfer to the ISFSI the supplemental shielding has no other functions. Therefore it is subjected to the requirements of 10CFR50 components. As such the shielding is designed to bring the occupational dose ALARA and to meet the plant 10CFR Part 50 criteria for the safety of the workers and plant personnel in the fuel handling and surrounding buildings.

It is not designed to meet 10CFR Part 72.104(a) criteria as these do not apply until the loaded transfer cask actually leaves the fuel handling building at which time the supplementary shielding is provided by the trailer. The adequacy of the supplementary shielding in the decontamination area will be addressed by the licensee in their 10 CFR 50.59 and 10 CFR 72.212 evaluations that must be prepared prior to utilizing the OS197L transfer cask. The 72.212 evaluation will address the dose consequences of all operations inside the fuel building, including the handling of the bare OS197L TC and the use of supplemental shielding in the decontamination area. The 10 CFR 72.212 evaluation will also address the controlled area boundary dose evaluation based on the layout of their fuel building and distance to the controlled area boundary and assign appropriate requirements on the decontamination area supplemental shielding.

The requirement of 10 CFR Part 72.104 to consider 20 such "casks" is not applicable to the supplementary shielding as this is a temporary item that is used only during the transfer operations for each DSC. The requirements of 10CFR 72.104 described in Interim Staff Guidance-13 are shown to be satisfied for 20 loaded "casks" once the DSC's have been placed within the HSM's at the ISFSI site.

NUREG-1536 defines Important to Safety as a "function or condition required to store spent fuel of high level waste safely. To prevent damage to the spent fuel or the high level waste container during handling and storage, to provide reasonable assurance that that sent fuel or high level radioactive waste can be received, handles, packaged, stored and retrieved without undue risk to the health and safety of the public." The supplemental decontamination area shield does not meet any of these requirements for Important to Safety.

All operations associated with the placement of the transfer cask within the decontamination area shielding, including placement of the top portion of the shield, are handled remotely. Once the top shield is in place dose measurements will demonstrate that the shielding is correctly installed prior to any worker access and exposure.

Drawings of the decontamination area shielding are provided in Section W.1.1.

5-26 Revise Section W.3.9 to address the performance of the interim cask cover during the postulated drop scenarios.

Address the performance of the interim cask cover during the postulated drop scenarios. Section W.3.9 and Chapter W.8 (Page W.8-9) indicate that the interim cask cover may be installed for movement of the TC from the decontamination area to the

trailer. Section W.3.9 should be revised to address whether the interim cask cover survives the postulated drop scenarios such that the water is maintained in the annulus and also such that DSC remains inside the TC. Describe the functionality of the gasket during the postulated drop scenarios as well. If necessary, address gasket failure and interim cask cover failure in the shielding and accident analyses in Chapters W.5 and W.11, as appropriate.

This information is necessary to verify compliance with 10 CFR 72.236(d).

Response to 5-26:

Please see response to RAI 2-6.

Note: RAI 5-27 through RAI 5-41 apply to SAR Chapter W.5, "Shielding Evaluation"

5-27 Revise the shielding evaluation in Chapter W.5 to provide justification that the 32PT DSC is the bounding source term for the OS197L TC.

The application reports dose values considering the OS197L TC loaded with a 32PT DSC. However, Section W.11.1.4 states that the 24PHB provides the highest 100-meter dose rate. Therefore, it appears that the bounding source term was not analyzed for the OS197L TC.

If there is justification for why the 32PT DSC source term bounds the 24PHB source term, additional justification is needed to show that the previously-determined design-basis fuel for the 32PT DSC remains bounding for the 32PT DSC inside the OS197L TC. Appendix M, Chapter M.5 states that the design-basis fuel for the 32PT DSC was selected based on the OS197/OS197H TC. The OS197/OS197H TC designs have lead shielding. It is not clear that the previously-determined design-basis is valid, due to the significant shielding differences between the OS197L TC and the OS197/OS197H TC.

The revised discussion should also address the drainage of the DSC/TC annulus and the neutron shield during downending onto the transfer trailer, and whether these evolutions impact the design-basis source term.

This information is necessary to verify compliance with 10 CFR 72.104 and 10 CFR 72.106. Additionally, NRC guidance in NUREG-1536, "Standard Review Plan for Dry Cask Storage Systems," directs the shielding reviewer to verify that the applicant calculated the source term on the basis of the fuel that will actually provide the bounding source. Further, this information is necessary for the staff to ensure that occupational radiation exposures satisfy the limits of 10 CFR Part 20 and meet the objective of maintaining exposures ALARA.

Response to 5-27:

Chapter W.5 has been revised in its entirety to provide a detailed discussion of the shielding evaluation performed for the OS197L TC.

The source term evaluations (including bounding source terms and bounding DSC) for the OS197L are discussed in detail in the revised Section W.5.2. In summary, the dose rate contribution to the OS197L TC is almost entirely due to primary gamma sources. A

comparison of the results of the source term and shielding calculations documented in Appendix M, Section M.5 for the 32PT DSC in the OS197 TC and in Appendix N, Section N.5 for the 24PHB DSC in the OS197 TC show that the gamma source terms and dose rates for the 32PT DSC are higher. Therefore, the 32PT DSC source terms are considered bounding for the OS197L TC as the gamma dose rates are maximized.

The accident condition dose rate calculations in W.11.1.4 are highly conservative and beyond the design basis because credit for the inner and outer neutron shield shell is not taken. Further, the accident condition dose estimates are derived by conservatively employing a scaling factor based on 24PHB/OS197 TC accident dose rates considering the higher neutron source term even though the contribution of neutron dose rates is within 5% (within the statistical uncertainty of the MCNP calculations) of the total dose rates.

5-28 Revise the shielding evaluation to address the impact of the use of the interim cask top cover.

Section W.3.9 and Chapter W.8 indicate that an interim cask top cover may be installed for movement of the TC from the decontamination area to the trailer. However, neither Section W.5.3 nor Table W.5-1 provides an estimate of the increased dose rate anticipated due to use of the interim cask top cover. Additionally, address any impact on the shielding analysis from the structural evaluation of the performance of the interim cask cover during the postulated drop scenarios.

This information is necessary to verify compliance with 10 CFR 72.236(d).

Response to 5-28:

Chapter W.5 has been revised in its entirety to provide a detailed discussion of the shielding evaluation performed for the OS197L TC.

The new section W.5.4.10 describes the shielding evaluation performed during loading and transfer operations. The shielding evaluation using the temporary cask top cover prior to transfer is described in Section W.5.4.10.4.

5-29 Clarify which DSCs are authorized for transfer within the OS197L TC.

Section W.5 (Page W.5-1) states "This Appendix presents the shielding evaluation of the OS197L TC when used for fuel loading and transfer of the DSCs currently licensed under CoC 1004...." and then lists a subset of the DSCs currently licensed under CoC 1004. Clarify whether the OS197L TC is intended for use of all DSCs currently licensed under CoC 1004, or whether it is intended only for use with the listed DSCs.

This information is necessary to verify compliance with 10 CFR 72.11.

Response to 5-29:

The DSCs that are authorized for transfer with the OS197L TC are the 52B, 24P, 61BT, 32PT and 24PHB. This information is now provided in the first paragraph of the revised Chapter W.5.

5-30 Correct and/or clarify the apparent discrepancies between Section W.5.3 and Table

W.5-1.

Section W.5.3 states that OS197L TC surface dose rates are 54 rem/hr and 57 rem/hr during the lifts from the pool to the decontamination area and from the decontamination area to the trailer, respectively. However, Table W.5-1 states that the OS197L TC surface dose rate is 53.249 rem/hr. Explain the apparent discrepancy.

This information is necessary to verify compliance with 10 CFR 72.11.

Response to 5-30:

Chapter W.5 has been revised in its entirety to provide a detailed discussion of the shielding evaluation performed for the OS197L TC.

The new section W.5.4.10 describes the shielding evaluation performed during loading and transfer operations. The dose rates presented in Table W.5-1 are for normal conditions with water in the neutron shield and are applicable to lifts during decontamination. The maximum surface dose rate is 53.249 rem/hour and this has been rounded up to 54 rem/hour. The dose rates for the lifts from the decontamination area to the trailer are calculated with no water in the neutron shield and are now shown in the new Table W.5-2. The maximum surface dose rate is 86.691 rem/hour. This discrepancy is therefore, eliminated.

5-31 Revise Chapter W.5 to describe the various shielding configurations and corresponding dose rates anticipated during normal, off-normal, and accident conditions.

List in explicit detail all shielding configurations and corresponding dose rates (both axial and radial) anticipated during normal, off-normal, and accident conditions; and provide the corresponding OS197L TC surface dose rates. Chapter W.8 indicates that, at various times, the DSC/TC annulus may be drained, the neutron shield may be drained, and an interim cask cover may be used. Additionally, Chapter W.8 indicates that placement of the 3" outer shield on the transfer trailer may be delayed. Revise Chapter W.5 to describe each of these configurations, using both text and figures. For each configuration, provide the estimated surface and 100-meter dose rates, for both axial and radial directions. Currently, Chapter W.5 does not provide axial dose rates.

This information is necessary to demonstrate compliance with 10 CFR 72.236(d).

Response to 5-31:

Chapter W.5 has been revised in its entirety to provide a detailed discussion of the shielding evaluation performed for the OS197L TC.

The new section W.5.4 describes the shielding evaluation performed during normal, off-normal and accident conditions during loading and transfer operations of the OS197L cask. This section also includes a discussion of the methodology, computer code, assumptions and cross section data utilized in this shielding evaluation.

5-32 Revise Sections W.5.2 and W.5.3 to describe the shielding calculations performed for the OS197L TC.

a. Discuss the material densities used and the dimensions assumed for the OS197L TC, the decontamination area shielding, and the trailer shielding.

b. Revise Figure W.5-1 to provide a level of detail similar to Figure M.5-24, showing all axial and radial dimensions modeled in the 3-D MCNP analysis.
c. Provide a figure, similar to the revised Figure W.5-1, showing the model used for the 3-D analysis of the OS197L TC inside the transfer trailer. If no such analysis was performed, justify why it was not necessary. Such justification must address dose rates anticipated for the duration of time that the top trailer shielding is not installed.
d. Describe the spatial source distribution assumed.
e. Describe all assumptions used for the normal, off-normal, and accident condition shielding analyses, including whether the neutron jacket was full or empty, the annulus full or empty, the interim cask cover was used, etc.
f. Specify the flux-to-dose rate conversion factors used
g. Specify cross-section data used
h. Specify general assumptions used in the analysis
i. Describe the MCNP calculations performed
j. Provide a 3-D analyses similar to Section M.5.4.12.1 for the bounding DSC, including:

    i. Dose rate distribution along OS197L TC side for the various configurations of the TC (i.e., DSC/TC annulus full/empty, neutron shield full/empty, quantifying the increased neutron source term along the neutron shield weld)

    ii. Dose rates expected during decontamination operations (i.e., OS197L TC top-end dose rates, dose rate distribution along the decontamination area supplemental shielding side, including contributions from the openings in the upper and lower shield bells depicted in Figure W.1-2. Section W.8.1.3 contains a step to visually inspect these openings to assure no significant blockage.

    iii. Dose rate profiles expected during welding of the inner and outer covers of the DSC. Specifically address whether the manual welding operations mentioned in the UFSAR (Page 4.7 5) may be performed when using the OS197L TC. If manual welding operations are allowed, provide expected dose rate profiles that would be encountered during such operations.

This information is necessary to demonstrate compliance with 10 CFR 72.236(d).

Response to 5-32:

Chapter W.5 has been revised in its entirety to provide a detailed discussion of the shielding evaluation performed for the OS197L TC. This evaluation is presented in adequate detail along the same lines as described in this RAI.

The cask decontamination operations are described in the revised section W.5.4.10.2. The bare cask dose rates are utilized to estimate dose rates at the top and bottom ends of the decontamination shield to determine the exposure due to the additional step involving a visual inspection of vents for "blockage". The occupational exposure for this step is also evaluated in the revised Chapter W.10.2

Since the axial shielding configuration of the OS197L TC is no different compared to the OS197 TC, the axial dose rate profiles expected during manual operations described in the shielding evaluation sections for the respective DSCs are applicable. This information is provided in the revised section W.5.4.10.

5-33 Revise Section W.5.3 to clarify what is meant by "the UFSAR configuration above," "the specific model used in the UFSAR," "the UFSAR analysis," and "the OS197 TC configurations shown above."

These statements (see 2nd full paragraph of Page W.5-2) refer to configurations, analyses, and models that were not discussed earlier in Chapter W.5. Clarification is needed regarding each of these statements. Additionally, these statements imply that figures are needed depicting additional configurations. Revise Chapter W.5 to add in these figures, as appropriate.

This information is necessary to satisfy the requirements of 10 CFR 72.11 and 72.236.

Response to 5-33:

Chapter W.5 has been revised in its entirety to provide a detailed discussion of the shielding evaluation performed for the OS197L TC.

The requested information, originally in section W.5.3, is currently described in section W.5.4. A summary of the various calculational models employed in the shielding evaluations is provided in the new section W.5.4.7. All appropriate tables and figures corresponding to these configurations are also included.

5-34 Justify that the relative effect on dose rates of the OS197L TC configuration and the decontamination area/trailer shielding configurations with respect to the OS197 TC are applicable to "all CoC 1004 licensed DSC payloads."

Sections W.5.3 and W.11.1.4 state that relative effect on dose rates of the OS197L TC configuration and the decontamination area/trailer shielding configurations with respect to the OS197 TC are applicable to "all CoC 1004 licensed DSC payloads for the OS197L TC." Justify this statement.

This information is necessary to satisfy the requirements of 10 CFR 72.11 and 72.236(d).

Response to 5-34:

This statement has been revised in Section 11.1.4 to state "DSC payloads authorized for transfer with the OS197L TC". The justification for the "relative effect" statement is included in the revised section W.5.2 that discusses the design basis source terms and DSC for evaluation. Above all, this is only utilized to obtain conservative accident dose rate results based on previously calculated dose rates with other DSCs and the OS197 TC.

5-35 Justify the conclusion in Section W.5.3 that the loss of neutron shield accident dose rates bound the doses from the accident fire condition.

Section W.5.3 states "[The loss of neutron shield] dose rates bound the doses from accident fire condition [stet] because the shielding on the trailer is not affected by the fire condition." This statement does not address whether the loss of neutron shield accident dose rates bound the doses from the accident fire condition in the decontamination area. Justify that the loss of neutron shield accident dose rates are bounding for the fire, regardless of where the OS197L TC is located (on the crane, in the decontamination area, in the trailer) during the accident fire condition.

This information is necessary to determine compliance with 10 CFR 72.236(d).

Response to 5-35:

The analysis conclusion in Appendix W.5 is only related to 10CFR72 accident evaluations which consider accidents that apply to the OS197L cask after it leaves the fuel building. Any accidents including Fire inside the fuel building are subjected to 10CFR Part 50 evaluation and not a part of 10 CFR 72 evaluation. General Licensee is required to perform a 10 CFR 72.212 evaluation before the use of any cask and analyze all applicable 10CFR50 events including any Fire accident inside the fuel building

The requested information, originally in section W.5.3, is currently described in the new section W.5.4.9. The dose rates from a loss of neutron shielding accident as calculated that include a loss of water and the inner and outer neutron shields bound the dose rates from fire accidents because the fire accident is not expected to result in the loss of any steel material from the cask i.e., only the neutron shield water will be lost during the fire event.

5-36 Revise Section W.5.3.2 to analyze neutron streaming through the seams of the neutron shield, and to justify the conclusion that the dose rate (including both gammas and neutrons) in the vicinity of the seams would not increase due to the lack of neutron shielding at the seams.

Section W.5.3.2 states that the neutron dose would increase at the seams joining the two halves of the neutron shield. It also states that the gamma dose would decrease at the seams due to the increased amount of steel. Revise Section W.5.3.2 to quantify the increase in neutron dose and decrease in gamma dose at the neutron shield seams. Provide a table with these results similar to Table W.5-2.

This information is necessary to verify compliance with 10 CFR 72.236.

Response to 5-36:

Chapter W.5 has been revised in its entirety to provide a detailed discussion of the shielding evaluation performed for the OS197L TC.

The requested information, originally in section W.5.3.2, is currently described in section W.5.4.8.3. The effect of the absence of neutron shielding in the vicinity of the weld seams of the neutron shield shells on the dose rates around the same area are discussed therein. The maximum dose rate at the surface of the OS197L cask with water in the neutron shield is approximately 54,000 mrem/hour. The maximum dose rate at the surface of the OS197L cask (using 2.5 inches of steel instead of 3 inches) without water in the neutron shield – this configuration conservatively bounds that in the vicinity of the seams - is approximately 4,000 mrem/hour.

As described in the revised section W.5.2, the dose rates on and around a bare OS197L cask are dominated by gamma sources so much so that the calculated neutron dose rates (even during accidents) are within the uncertainty of the calculated gamma dose rates. This implies that the dose rate increase in the vicinity of the weld seams due to absence of neutron shielding is more than compensated by a corresponding dose rate

reduction (order of magnitude) due to presence of steel instead of water neutron shield. This is demonstrated by the results presented in this response.

5-37 Provide a reference for the OS197 TC dose rates listed in Table W.5-1.

Table W.5-1 lists dose rates for an "OS197 TC" configuration. Provide a reference for these dose rates, and/or revise Chapter W.5 to add a discussion of the analysis performed determining these dose rates, as appropriate.

This information is necessary to verify compliance with 10 CFR 72.236.

Response to 5-37:

Chapter W.5 has been revised in its entirety to provide a detailed discussion of the shielding evaluation performed for the OS197L TC.

The new Section W.5.4.7 describes the various TC configurations including the OS197 TC configuration as analyzed as requested.

5-38 Clarify what shielding configurations were modeled to obtain the "OS197L TC with Decon Area or Trailer Additional Shielding" dose rates in Table W.5-1.

Figure W.1-2 indicates that the decontamination area supplemental shielding is 6-inches thick. Figure W.1-3 indicates that the trailer supplemental shielding is 5.5-inches thick. Neither figure specifies the amount of air gap between the OS197L TC and the supplemental shielding. Revise Table W.5-1 and add discussion to Chapter W.5, as appropriate, to clarify what configuration was modeled to determine the "OS197L TC with Decon Area or Trailer Additional Shielding" dose rates in Table W.5-1.

This information is necessary to verify compliance with 10 CFR 72.236.

Response to 5-38:

The supplemental decontamination area shield is 6 inches thick while the supplemental trailer shield is 5.5 inches thick. All calculations were conservatively performed assuming a supplemental shield thickness of 5.5 inches. The new section W.5.4.7 provides a detailed description of the various shielding evaluations performed during loading and transfer operations.

5-39 Clarify the apparent discrepancy between Figure W.5-1 and Figure W.1-2.

Figure W.5-1 shows that the decontamination area shielding was modeled as 5.5-inches of steel. However, Figure W.1-2 indicates that the decontamination area supplemental shielding is 6-inches thick. Clarify this apparent discrepancy.

This information is necessary to verify compliance with 10 CFR 72.11.

Response to 5-39:

See response to 5-38 above. Figure W.5-1 describes the configuration as modeled.

5-40 Clarify the statement regarding the bounding condition from a dose perspective.

Page W.8-10 states "The OS197L TC system shielding ... provides a level of shielding equivalent to that provided by the standard OS197 TC (with lead shielding) and is the bounding condition of the two from a dose perspective (decon area and transfer trailer)." This statement is not justified with dose rate values, and it is not clear what is meant by "bounding." Justification and clarification is necessary.

This information is necessary to verify compliance with 10 CFR 72.236.

Response to 5-40:

Under normal conditions of operation, the OS197L TC with the supplemental shielding results in a lower calculated dose rate (122 mrem/hour on the radial surface of the supplementary shielding with the 32PT DSC in OS197L TC) for the same DSC payload than the OS197 cask (346 mrem/hour on the radial surface of the OS197 TC with the 32PT DSC). "Bounding" , therefore means that the dose rates calculated for the OS197 TC can be applied to the OS197L TC when inside the decontamination area shield or inside the supplemental trailer shielding.

5-41 Justify that the dose limits of 10 CFR 72.104 and 10 CFR 20.1301(a)(2) will be met.

Table W.5-1 indicates that the dose rate from the bare OS197L TC is 4.53 mrem/hr at 100 meters, the regulatory minimum distance to the controlled area boundary. 10 CFR 72.104 specifies annual dose limits of 0.25 Sv (25 mrem) to the real individual (also see the other dose limits) during normal operations and anticipated occurrences. Therefore, depending on the layout of the fuel handling building and also on the type of containment structure (e.g., the building structure above the spent fuel pool in a Mark I containment provides very little radiation shielding), the limits of 10 CFR 72.104 may be exceeded to a real individual at 100 meters in less than 5 hours for loading of a single cask. As stated in Interim Staff Guidance - 13, "Real Individual," at least 20 casks should be considered when evaluating compliance with 10 CFR 72.104 (less than 20 cask maybe appropriate if applicable restrictions are applied). Also as stated in the staff guidance, "It is important to note that the general ISFSI licensee is permitted to use additional engineering features, such as berms, to mitigate doses to real individuals near the site. If such features are used in the cask SAR to show compliance with the regulations, they should be included in the cask conditions of use. In addition the SAR should determine the degree to which the normal condition dose rates could change for the identified off-normal conditions." Therefore, the applicant should analyze a theoretical 20-cask loading campaign, considering both the normal conditions and the off-normal conditions (i.e., anticipated occurrences) for movements of the bare OS197L TC. The off-normal conditions should include crane hang-up, failure of remote handling equipment, and other factors unique to the OS197L. Additionally, the analysis should include discussion of all assumptions regarding the amount of time the OS197L TC is on the crane during normal and off-normal conditions, and the amount of shielding (if any) provided by the fuel handling building structure. Based on the results of the analysis, any necessary conditions to the certificate should be identified; e.g., time limits for normal condition crane moves, annual limits on the number of times the OS197L TC may be used to move fuel, specifications of containment type/fuel handling building structure, and/or minimum distance to the controlled area boundary of greater than 100 meters.

The regulations in 10 CFR 20.1301(a)(2) state: "The dose in any unrestricted area from external sources, exclusive of the dose contributions from patients administered radioactive material and released in accordance with § 35.75, does not exceed 0.002

rem (0.02 millisievert) in any one hour." Table W.5-1 indicates that the dose rate from the bare OS197L TC is 4.53 mrem/hr at 100 meters, the regulatory minimum distance to the controlled area boundary. Justify that the dose limits of 20.1301(a)(2) will be met. In order to assure compliance with the dose limits of 10 CFR 20.1301(a)(2) consider the following:

-specify a condition of use of the controlled area boundary, or other boundary as appropriate, of greater than 100 meters, if necessary.

-specify other mitigative measures such as operational controls (e.g. closed fuel building structures) that do not create a direct beam of radiation to the unrestricted area.

This information is necessary to ensure compliance with 10 CFR 72.104 and 20.1301(a)(2).

Note: RAI 5-42 through RAI 5-47 apply to SAR appendix W Chapter W.8, "Operating Procedures"

Response to 5-41:

The dose rate limits of 10 CFR 72.104 apply to the loaded HSM out at the ISFSI pad. The 100 meter regulatory minimum distance to the controlled area boundary is for the array of casks (HSMs) at the ISFSI, not the transfer cask. The guidance given in ISG-13 for the consideration of at least 20 casks when evaluating compliance to 10 CFR 72.104 applies to the 20 HSMs with loaded DSCs at the ISFSI pad. They do not apply to the loading and transfer operations which are short term in nature.

The dose rate and exposure limits during loading and transfer operations are governed by the plants existing 10 CFR 50 license commitments and 10 CFR 20. The 10 CFR 20.1301(a) requires each Part 50 license holder to develop, document, and implement a radiation protection program to ensure compliance with the provisions of the 10 CFR 20. Therefore, each reactor site has a program in place to assure compliance with the 10 CFR 20 limits. How each site complies with the requirements of 10 CFR 20 is different depending on their individual programs. Therefore the existing site radiation protection program will assure that the dose limits of 10 CFR 20.1301(a)(2) will be met. The specific measures taken will depend on each sites radiation protection program, in general however, the area with dose rates above the limits set forth under 10 CFR 20 will be posted to keep members of the general public and non-radiation workers out of the areas with dose rates exceeding the limits. In addition, the Radiation Work Permits and associated ALARA evaluations will protect the health and safety of the radiation workers.

5-42 Revise Chapter W.8 to require the licensee to develop and have in place procedures for recovery from a crane malfunction and failure of other remote operations equipment such as the optical targeting system, cameras, etc.

Section W.5.3 states "Should a failure of the crane occur during [remote crane operation using a laser/optical targeting system and cameras], procedures will be in place to either repair the crane using proper ALARA practices and resume remote operations, or manually position the load in a safe, shielded location." The operating procedures must be revised to direct the licensee to have such contingency procedures in place prior to loading the OS197L TC with fuel.

This revision is necessary to satisfy the requirements of 10 CFR 72.236.

Response to 5-42:

Section W.8.1 is revised to require that procedures for recovery from a crane malfunction and failure of other remote operations equipment be developed and be in place prior to lifting of the loaded bare cask.

5-43 Revise the caution on Page W.8-4 regarding licensee development of appropriate measures to keep dose rates ALARA during recover from a potential malfunction of "these devices."

Clarify what "these devices" means. Remove the words "if needed." Additionally, move the caution to appear earlier in the operating procedures so that licensees are instructed to develop these measures prior to loading the OS197L TC with fuel.

This revision is necessary to satisfy the requirements of 72.236.

Response to 5-43:

Appendix W.8, Page W.8-4 is revised to delete “if needed”. Clarification is added to describe “these devices”.

Technical Specification 5.2.4 provides the requirements of the individual site's radiation protection program to be considered for use of the OS197L TC, including its ALARA Program and recovery from potential malfunctions. The general licensee (utility) has ultimate responsibility for determining when measures are required in implementation and operation. This will dictate the additional measures to be considered and evaluated.

5-44 Justify that OS197L TC dose rates during "Sequence 6" on Page W.8-6 are ALARA.

Justify that TC dose rates during this operation are ALARA. Revise Chapter W.10 to include a dose assessment of anticipated occupational exposures. The assessment should discuss both axial and radial dose rates and their contribution to occupational exposures.

This information is necessary for compliance with 10 CFR 72.11.

Response to 5-44:

As stated in Chapter W.10, the use of the OS197L TC is not expected to have any significant impact on personnel dose rates during normal operation since the operations for placement and removal of bare OS197L TC from the fuel pool into the decontamination area shielding sleeve, placement and removal of the decontamination area shielding bell, engagement of the yoke to the cask trunnions, movement of the cask to the trailer, lowering of the cask onto the trailer and placement of the trailer shielding on the cask will be performed remotely using cameras and laser/target positioning.

Chapter W.10 is revised to include calculation of occupational exposure for all operations of the OS197L TC including the installation of the top shielding bell.

5-45 Clarify how much water will be present in the DSC/TC annulus during the downending operations.

Page W.8-7 states "... the DSC/TC annulus will essentially remain filled ... during downending operations." Quantify what "essentially" means. If there is any potential impact on the shielding and thermal calculations, revise the thermal, shielding, and radiation protection sections as appropriate.

This information is necessary to satisfy the requirements of 10 CFR 72.11 and 72.136.

Response to 5-45:

"Essentially" is equivalent to "normal full level". The use of the word "essentially" is to reflect the fact that there will be a small ("negligible") air volume above the DSC and below the TC lid when in the vertical position. As the TC is rotated from the vertical to the horizontal on the transfer trailer, the gas space will move to the "side" of the DSC which is now the "top." This small "air" gap has negligible impact on the thermal evaluation as it is very small and the rest of the annulus volume is still full of water. No additional shielding evaluations or occupational exposure evaluations are required because water in the annulus is not credited when calculating occupational exposure during downending operations or other operations required for removing the interim cask lid and replacing it with regular lid as documented in revised Chapter W.10.

5-46 Revise Section W.8.1.2 to specify use of remote operations when handling the bare OS197L TC.

Revise the 5th bullet in Section W.8.1.2 to specify use of remote operations when placing the bare OS197L TC into the decontamination area shielding sleeve and for lowering the shielding bell.

This information is necessary to demonstrate compliance with 10 CFR 72.11 and 72.236(d).

Response to 5-46:

Section W.8.1.2 and W.8.1.5 are revised to add a note to recommend use of remote operations or other mitigating ALARA practices when handling the bare OS197L TC as required by the sites ALARA program.

5-47 Revise Section W.8.1.3 to require verification of TC dose rates to assure compliance with the technical specifications.

Section W.8.1.3 requires verification of TC dose rates to assure consistency with the analysis provided in the UFSAR. Revise this section to require verification of TC dose rates to assure compliance with TS 5.2.4 (see RAI 8-2).

This information is necessary to demonstrate compliance with 10 CFR 72.236(d).

Response to 5-47:

Section W.8.1.3 is revised to require verification of TC dose rates to assure compliance with TS 5.3.4 (See response to RAI 8-2).

Note: RAI 5-48 applies to SAR appendix W Chapter 9, "Acceptance Criteria and Maintenance Program"

5-48 Clarify whether any changes to the acceptance criteria and maintenance requirements described throughout the UFSAR are necessary for the supplemental shielding (both the decontamination area and trailer shielding) for the OS197L TC.

Chapter W.9 states that the acceptance criteria and maintenance requirements described throughout the UFSAR for the OS197 and OS197H TCs are identical to the acceptance criteria and maintenance requirements for the OS197L TC. However, Chapter W.9 does not state whether additional or different acceptance criteria and maintenance requirements are necessary for the supplemental shielding that must be used in conjunction with the OS197L TC in the decontamination area and on the transfer trailer. Additionally, clarify if the statement in Chapter W.9 is applicable to the interim cask cover.

This information is necessary to satisfy the requirements of 10 CFR 72.11.

Response to 5-48:

There are no additional or different acceptance criteria and/or maintenance requirements necessary for the supplemental shielding used in the decontamination area and on the transfer trailer. These items are made of materials and codes of construction similar to those used for the HSM support steel. The supplemental shielding is made of heavy steel plate which is coated for corrosion protection (similar to the HSM support structure carbon steel components) and is passive requiring no special acceptance criteria or maintenance criteria. The statement in W.9 is also applicable to the interim cask cover which has no special acceptance criteria or maintenance requirements.

Note: RAI 5-49 and RAI 5-50 apply to SAR Chapter 10, "Radiation Protection"

5-49 Expand the discussion of how worker doses were obtained. Provide all assumptions used to determine the worker doses.

a. The backscatter correction factor, derived in calculation NUH06L-503, was used to determine the 1,600 man-mrem dose reported as the additional occupational exposure associated with a recovery from a remote handling device failure. Discuss the impact to worker doses on changes in the backscatter correction factor, noting sensitivities such as whether this factor will be larger or smaller for different size rooms.

b. Provide worker doses for each of the scenarios discussed in NUH06L-503, including off-normal conditions such as crane hangup, failure of remote handling equipment, etc. (See RAI 9-27)

c. Provide doses for the trailer without the outer top shield installed.

d. Provide occupational doses associated with visually checking that the openings in the supplemental shielding are not blocked.

e. Provide all assumptions for each analysis (e.g., the 1,600 man-mrem reported assumes that no workers have to get within 10 meters of the TC).

f. Justify the statement "...use of the OS197L TC does not significantly affect personnel dose rates (during closure operations, handling, or storage) or site boundary dose rates." This statement appears to only apply to normal conditions of operation. Address the crane hang-up scenario (and other off-normal conditions such as remote handling operations failure scenarios)

g. Provide worker doses for the activity described on Page W.8-7 involving installation of the necessary equipment to provide makeup to the DSC/TC annulus during movement of the cask from the decontamination area to the trailer.

Response to 5-49:

a. Chapter W.10 is revised to include a detailed discussion, in new Section W.10.1, on the impact of room geometry on the backscatter correction factor and subsequently on the estimated worker doses.

b. Chapter W.10 is revised to provide worker doses to each of the various scenarios considered for off-normal events involving the bare OS197L cask.

c. The dose rates as a function of distance for a configuration with the OS197L TC in the transfer trailer prior to the installation of the outer top trailer shielding are calculated in Chapter W.5. The models, methods and results are discussed in Section W.5.4.

d. Chapter W.10 is revised to include the occupational doses associated with visually checking the decontamination shield for blockage. This calculation is provided in the new Section W.10.2.

e. Chapter W.10 is revised to include a detailed discussion in Section W.10.1, on the methodology and assumptions utilized in the calculation of the occupational doses for malfunction events involving the bare OS197L cask.

f. During normal conditions of loading and transfer, the OS197L (with remtote handled operations) does result in reduced worker doses. The additional occupational exposure due to off-normal events and operations unique to OS197L cask are calculated in Chapter W.10 and are shown to be within an acceptable range.

g. The operational sequence involving the movement of the bare cask from the decontamination area to the trailer requires the installation of necessary equipment (as an example: long hoses with Swedge Lock quick connect fittings) to ensure that the DSC/TC annulus is essentially full of water and makeup can be provided in case of a malfunction during the movement of the OS197L TC. The required equipment is installed prior to the installation of the OS197L TC Interim top cover. The OS197L TC is in the decontamination area shield and therefore occupational exposure received for this activity is low. It is estimated that it will take one worker approximately 10 minute to connect the necessary equipment that will result in 20 mrem total exposure based on using side average surface dose rate of 120 mrem/hour on the decontamination area shield.

   Transfer of the OS197L TC from the decontamination area to the trailer is a short duration activity which normally takes less than an hour. The makeup is required only if there is a malfunction during the movement of the bare OS197L TC from the decontamination area to the transfer skid. Proper ALARA practices will be used

during any potential malfunction. In such a case, the OS197L TC will be suspended on the crane and dose rates from the side of the bare OS197L TC are very high. However, to connect the makeup water supply, the workers will be approaching the vertically suspended OS197L TC from the bottom where the dose rates are the same as OS197 TC due to same shielding configurations of both casks in the axial bottom direction. Since all the required equipment is pre staged before any movement of the cask, it is estimate that it will take less than 2 minutes to connect the makeup water supply to the quick connect fittings on the hoses. Using an average bottom surface dose rate of 300 mrem/hour, additional exposure for this activity is 10 mrem. Chapter W.10 is revised to add this occupational exposure. Note that the general licensee is already required to evaluate this activity during the Radiation Protection Program dose evaluation per Technical Specification 5.2.4.

5-50 Revise the first sentence to clarify that personnel and site boundary dose rates are not affected for normal conditions of operation.

The first sentence of Chapter W.10 states "... the OS197L TC does not significantly affect personnel dose rates ... or site boundary dose rates." This statement is true for normal conditions, but may not be true for off-normal and accident conditions. Revise this statement to reflect that it only applies to normal conditions.

This information is necessary to demonstrate compliance with 10 CFR 72.11.

Response to 5-50:

The first sentence in Chapter W.10 is revised to include "normal conditions."

Note: RAI 5-51 through RAI 5-55 applies to SAR appendix W Chapter 11, "Accident Analyses"

5-51 Clarify whether the accident analyses consider the impact of the supplemental shielding and the interim top cover for the OS197L TC.

It is not clear that the missile impact analysis, the earthquake analysis, or the drop analyses would not change due to the presence of the supplemental shielding either in the decontamination area or on the trailer. Since the supplemental shielding is not optional and must be used in conjunction with the OS197L TC, as noted in Section W.1.2, the accident analyses must consider the presence of the shielding. Unless a single-failure proof crane is required in the certificate or technical specifications, assess the impact of dropping the supplemental shielding.

Additionally, address any impact of the interim top cask cover for the OS197 TC on the accident analysis. In addition to providing any relevant analyses, discuss the performance of the interim cask cover during the missile impact, the earthquake, and the accidental drop.

This information is necessary to demonstrate compliance with 10 CFR 72.236.

Response to 5-51:

TN recommends that the supplemental shielding components and the interim top cover for the OS197L TC be handled using a single failure proof crane when these components are handled inside the fuel/reactor building. If a single failure proof crane is not used, the licensee is to evaluate the accidental drop of these components in

accordance with the plant's heavy load procedures under 10CFR50.59 and 10CFR 72.212, and evaluate the consequences of the accident drops.

Supplemental Outer Top Trailer Shield

In the case when fuel building floor load loads limit placement of the supplemental outer top trailer shield inside the fuel building, it may be placed outside the fuel building. Section W.11.1.5 has been added to the SAR to summarize the evaluation of the accidental drop of the outer top trailer shield. Based on this evaluation, Section W.8.1.5, Step 15, has been modified to restrict the lifting height of the outer top trailer shield when it is been placed on top of the inner top trailer shield. Furthermore, a new section to the Technical Specifications has also been added (Section 5.3.4) to require inspection for damage and evaluation for further use of the DSC and TC after an accident drop of the supplemental shields.

As stated in response to RAI 2-4, the missile impact resisting capability of the OS197L TC is improved relative to that of the OS197 TC due to the use of a thicker structural shell in the OS197L TC. When considering the massive steel plate components that make up the supplemental trailer shield, the OS197L TC provides for a significantly increased measure of protection against missile impact relative to that of the OS197 TC. Furthermore, they are precluded to become missiles themselves because of their massive nature.

The decontamination area shield which is used only inside the fuel building has been evaluated for conservatively estimated seismic loads. Maximum stresses are summarized in Section W.3.10, Table W.3-6.

Interim Cask Top Cover

The interim aluminum top cask cover is used only inside the fuel building when the OS197L TC is lifted from the decontamination area to the transfer trailer, where it is down-ended to its horizontal position onto the transfer trailer skid. While the OS197L TC is in the reactor/fuel building, the interim cask cover is replaced with the standard cask cover. Thus, there are no missile loads or drop loads to consider. This assumes that the interim aluminum cover is handled using a single failure proof crane. If a single failure proof crane is not used, the licensee is to evaluate the effects and consequences of postulated accident drop of the interim cover inside the fuel/reactor building.

5-52 Clarify the tables in Section W.11.1.4.

a. Clarify the difference between the "UFSAR" and the "OS197 TC" configuration. The text states that the UFSAR configuration is the OS197 TC loaded with a 32PT DSC. For the OS197 TC configuration, specify for which DSC the dose rates apply.

b. State all assumptions made regarding the configuration of the OS197 TC and its supplemental shielding. Be sure to address whether the DSC/TC annulus was assumed to be full or drained.

c. Revise the table on Page W.11-3 to indicate whether the contact dose rate is radial or axial. This information is necessary to demonstrate compliance with 10 CFR 72.11.

Response to 5-52:

a. The UFSAR configuration is the OS197 TC loaded with a 32PT DSC as modeled in Appendix M.5 using the 2D DORT computer code. The OS197 TC configuration is the OS197 TC with a 32PT DSC as modeled in MCNP including the DSC basket compartment and peripheral rails. Section W.11.1.4 is revised to include this clarification.

b. It is assumed that the TC is OS197L and not OS197. The accident condition calculations utilize a dry DSC and no water in the DSC/TC annulus. These calculations also do not include any supplemental shielding and conservatively exclude the inner and outer neutron shield shells of the TC. Chapter W.5 describes the accident condition models and Section W.11.1.4 is also revised to provide a similar description.

c. The contact dose rates provided are radial dose rates and the table is revised to include this information. Typically, the radial dose rates are more limiting than axial dose rates at distances below 50m. At greater distances, the cask more or less behaves like a point source and spatial variations are not expected.

5-53 Clarify the general recovery actions for the loss of neutron shield accident described in Section W.11.1.4.

Clarify the general recovery actions and assumed exposure times for the loss of neutron shield accident. Include a discussion of the anticipated worker doses and the distances and locations assumed to calculate the anticipated doses.

This information is necessary to determine compliance with 10 CFR 72.236.

Response to 5-53:

Section W.11.1.4 is modified to provide additional details, including occupational exposure calculations, for recovery actions associated with the loss of neutron shield accident.

5-54 Revise the wording on Page W.11-3 to indicate that the total dose at 100 meters is at the controlled area boundary, not the "site boundary."

Page W.11-3 reports the total dose at the "site boundary," which is a term defined in 10 CFR Part 20 and is not necessarily the same as the controlled area boundary, which is defined in 10 CFR Part 72.

This information is required to comply with 10 CFR 72.11.

Response to 5-54:

The wording in Section W.11.1.4 is revised to state “controlled area boundary.”

5-55 Correct the typo on Page W.11-3.

The last paragraph on Page W.11-3 states: "... results in a total person-dose of 18x18=144 mrem." It appears that this should report a person-dose of 18x8=144 mrem.

This information is necessary to demonstrate compliance with 10 CFR 72.11.

Response to 5-55:

The typo "18x18" on Page W.11-3 is corrected as "18x8".

Note: RAI 5-56 and RAI 5-57 apply to Calculation NUH06L-503

5-56 Justify why the peaking factor from Configuration E in Calculation NUH06L-0500 applies to the OS197L TC.

The shielding of Configuration E includes 4.25 inches of steel and 1.88 inches of lead shielding in the radial direction, whereas the OS197L only has 3.18 inches of steel and no lead shielding in the radial direction. Therefore, the energy spectrum of the gamma. radiation on the surface of Configuration E would differ from the energy spectrum of the gamma radiation on the surface of the OS197L TC. Justification is needed to demonstrate that the difference in energy spectrums does not impact the peaking factor. Additionally, justify that the peaking factor for the OS197L would follow the same trend as the peaking factor for Configuration E; i.e., justify that the peaking factor approaches. 1.0 at distances greater than 10 meters from the surface of the OS197L TC. This information is necessary to verify compliance with 10 CFR 72.236(d).

Response to 5-56:

The peaking factor was utilized to determine the radial dose rate distribution at a distance of 1.5 ft from the cask top utilizing an axial distribution based on results from Configuration E. The calculation is revised to utilize the actual dose rate distribution from accident configuration B and therefore no additional peaking factors are necessary.

5-57 Clarify how the backscatter correction factor was derived.

It appears that a factor of 5 or higher (instead of the factor of 2 assumed for the calculation) may be more appropriate for some scenarios and some plant layouts. Explain how the position of the TC (i.e., horizontal or vertical) impacts the correction factor. Additionally, explain how the layout of the fuel handling building impacts this factor. State whether the factor is expected to increase or decrease for smaller rooms.

This information is necessary to verify compliance with 10 CFR 72.236(d).

Response to 5-57:

The calculation is revised to include further discussion on the backscatter factor(s) utilized in the dose evaluation. The effect of the room size, cask position and distance on the backscatter factor is discussed along with the conservatism and applicability of the actual backscatter factors utilized in the calculation.

5-58 Justify the assumption that the loading/transfer operations will not involve workers coming nearer than 10 meters to the bare TC during normal and off-normal operations.

The calculation reports dose values assuming that workers will not come nearer than 10 meters to the bare TC during normal and off-normal operations. Justify that this assumption is valid. If necessary, provide a revised calculation that addresses worker doses considering off-normal conditions, including (but not limited to) scenarios involving

crane hangup, failure of remote handling equipment, or difficulty engaging/disengaging the yolk.

This information is required by the staff to assess compliance with 10 CFR 72.236(d).

Response to 5-58:

During normal operations where the bare cask is handled remotely, workers are not expected to be in the vicinity of the bare cask. This calculation discusses the occupational exposure associated with a malfunction during the remote handling operation – crane hangup/remote device failure etc. It is expected that workers are in the vicinity of the crane or the malfunctioning device and not the OS197LTC when performing recovery actions. Further, the calculation determines exposure assuming distances as close as 1 m from cask top surface for certain scenarios.

CHAPTER 6 Criticality Evaluation

6-1 Justify the assertion that the changes proposed in Appendix W are of insignificant importance to criticality safety.

Although the changes do not impact the orientation of the fuel or the contents allowed, the modifications to the outer surface of the cask may affect the reactivity of the system when modeled as an infinite cask array. No calculations were provided with the application to provide a comparison of the relative reactivity change.

This information is necessary to determine compliance with 10 CFR Parts 72.236(c).

Response to 6-1:

The criticality of the DSC/TC system is almost entirely dependent on the fuel assembly and basket design. Outside of the basket, even in a hypothetical infinite array, the TC material layout will not influence the reactivity of the system. The significant differences between the OS197 and the OS197L TC are due to the absence of lead (gamma shield) and the presence of a larger amount of steel in the OS197L TC. The amount of water (in the neutron shield) in both the casks is identical at 3.00". Therefore, no criticality calculations are performed since the cask geometry and material designs are similar and above all, the OS197L TC with larger amount of steel in the cask body offers an increased potential for neutron absorption in the cask body in comparison to the OS197 TC.

In summary, the modifications to the outer surfaces of the cask do not result in any significant changes to the system reactivity.

6-2 Technical Specification Table 1-1h should be reformatted to clearly indicate the four applicable basket types similar to the other Tables specified in Tech Spec 4.1.

This comment is intended to make the tables consistent with each other but to also ensure that the required information is readily available in the Tech Specs.

This information is necessary to determine compliance with 10 CFR 72.11.

Response to 6-2:

Table 1-1h is modified to specify the poison loading as a function of basket type, consistent with other Tables specified in Tech Spec 4.1.

CHAPTER 7 Materials Evaluation

7-1 Clarify where the TS bases associated with Amendment 10 TS 1.2.5 exists in Amendment 11.

Amendment 10 Sec 1.2.5 DSC Dye Penetrant Test of Closure welds was moved to TS 5.2.4b of the amendment 11 TS verbatim. It is not clear where the bases of the TS exists in Chapter 10 of the Amendment 11 FSAR.

This information is needed to determine compliance with 10 CFR 72.11.

Response to 7-1:

SAR Section B.10.5.2.4B (page 10-29) shows the bases of Amendment 10 TS 1.2.5 DSC Dye penetrant Test of Closure welds.

7-2 Clarify where the TS bases associated with Amendment 10 TS 1.2.1 exists in Amendment 11.

TS 1.2.1 Fuel Specifications for Amendment 10 consists of a number of tables that were transferred verbatim to Sec 2.1 of the new tech specs. The basis for the Tech Spec was moved to chapter 10 of the FSAR in the form of a table that guides one to the appropriate appendices for the details. Some of the detail in the basis write up indicating what went into each cask was dropped from the revision and should be added back for clarity.

This information is needed to determine compliance with 10 CFR 72.11.

Response to 7-2:

SAR Section B.10.2 is revised to add back the inadvertently omitted bases of Amendment 10 TS 1.2.1.

7-3 Add footnotes requiring testing of the boron content, similar to current footnotes (2) and (3), to the other models in the table in Section 4.1 of Amendment 11.

The boron in the plates is used for criticality control. Inadequate boron in the plates could allow unexpected criticality to occur.

This information is necessary to determine compliance with 10 CFR Parts 72.236(c).

Response to 7-3:

This question is the same as CoC 1004 Amendment 10, RAI 9-18. In response to this RAI 9-18, TN had committed to providing the Technical Specification changes and affected UFSAR pages to the NRC by January 28th 2008. TN will incorporate those same changes from the CoC Amendment 10 Technical Specifications into the Amendment 11 Technical Specifications and submit them to NRC one week following receipt of the preliminary CoC/SER for CoC Amendment 10.

CHAPTER 8 Radiation Protection Evaluation

8-1 Justify the sampling protocol described in TS 5.1 which checks for helium, but not radioactivity.

It is not clear how checking only for helium accounts for potential contaminants in the cask cavity.

This information is necessary to determine compliance with10 CFR 72.11.

Response to 8-1:

TS 5.1 is revised to add the requirement to check perform radioactivity check for the presence of airborne radioactive particulates.

8-2 Revise proposed TS 5.2.4 to specify the following:

a. Provide both radial and axial surface dose rate limits for the transfer cask/DSC combinations in the proposed Technical Specification (TS) 5.2.4, "Radiation Protection Program." Propose and justify the confirmatory measurements and locations chosen.

The applicant has proposed a modified radiation protection program in TS 5.2.4 that does not include transfer cask dose rate limits. The staff believes that the radiation protection program should include transfer cask dose limits based on the following discussion. As stated in the guidance provided in NUREG 1745, "Standard Format and Content for Technical Specifications for 10 CFR Part 72 Cask Certificates of Compliance," the administrative controls are to include a cask loading, unloading and preparation program that establishes criteria that need to be verified to address FSAR commitments and regulatory requirements. One of the criteria listed in Section 5.1.2 of NUREG 1745 that the applicant "shall establish" is "Surface dose rates to assure proper loading and consistency with the offsite dose analysis." The guidance further states that the program requirements are to be completed prior to the cask's removal from the 10 CFR Part 50 structure; for the Standardized NUHOMS system, this means establishing TS surface dose rate limits for the transfer cask.

10 CFR 72.236(d) requires the provision of radiation shielding features sufficient to meet the requirements of 10 CFR 72.104. 10 CFR 72.104(b) requires licensees to establish operational restrictions to meet as low as reasonably achievable objectives for direct radiation levels associated with ISFSI operations. 10 CFR 20.1101(b) also requires licensees to use procedures and engineering controls based upon sound radiation protection principles to achieve doses that are ALARA. TS dose rate limits for the transfer cask, therefore, ensure that transfer cask features remain sufficient to enable the licensee to meet these regulatory requirements. Also, TS dose rate limits for the transfer cask provide the licensee with the information necessary to perform a thorough ALARA evaluation and establish appropriate operational restrictions for anticipated cask work to minimize personnel exposure, thus aiding the effectiveness of the licensee's implementation of its 10 CFR Part 50 and Part 20 programs with respect to spent fuel handling

(such as ensuring that TS affecting operations in the fuel handling building are met). Additionally, the transfer cask surface dose rate limits also serve as a check against potential misloadings of a DSC. Staff further notes that licensee radiation protection personnel will be making multiple measurements during cask loading operations; therefore, measurements that verify compliance with TS dose rate limits will be among those performed by these personnel and will thus be readily available.

b. Justify the number and selection of dose rate measurement locations for the surface dose rate limits for the transfer cask in the proposed TS 5.2.4, "Radiation Protection Program," and revise the operating procedures to incorporate measurements as appropriate. Dose rate limits for the surface of the transfer cask, along with the number and locations of dose rate measurements and cask configuration (e.g. prior to DSC closure) when performing measurements (consistent with the shielding analysis and package operations), should be specified as part of the applicant's radiation protection program in proposed TS 5.2.4. Surface dose rate limits should be provided for each transfer cask DSC combination that are proposed in the CoC. The dose rate limits for all transfer cask configurations will ensure transfer cask features remain sufficient to enable the licensee to meet 10 CFR 72.104(b) and 10 CFR 20.1101(b) requirements for future operations involving all DSCs under this amendment.

This information is needed to confirm compliance with 10 CFR 72.104(b) and 72.236(d).

Response to 8-2:

Technical Specification 5.2.4 is revised to add the dose rate limits for the transfer cask dose Rates and their location on the transfer cask. The number and selection of dose rate measurement location is also added to this technical specification. NUHOMS CoC 1004 and associated technical specifications are currently used at numerous NUHOMS users at various ISFSI sites. These users are currently operating to the dose rate limits on the transfer cask form the technical specifications in Amendment 9. Therefore, values selected for the transfer cask dose rate limits are the same as those from Amendment 9 and 10 technical specifications.

In order to simplify the configuration of the cask and location, only radial (side) dose rate limits are specified. The axial dose rate limits were calculated in the existing TC dose rate technical specifications with various configurations for various DSCs (e.g., DSC cavity partially or completely drained, DSC/cask annulus with or without water, inner top cover plate with or without temporary shielding, etc.). Therefore to avoid confusion with respect to configuration of the DSC and TC in the axial direction, only the radial dose rate limits are selected.

Note: RAI 8-3 applies to the base SAR Chapter 5, "Operation Systems"

8-3 Clarify statements in the SAR "dry unloading" or "removal of fuel "outside the fuel reactor building." Revise the procedures for unloading the DSC to clarify which actions may be performed outside the fuel/reactor building. Justify how these operations meet the dose requirements of 10 CFR 72.104 and 10 CFR 72.106.

There are multiple locations in the UFSAR pages submitted with this application where the following statement appears relating to removal of fuel from a DSC: "If the work is performed outside the fuel/reactor building, a tent may be constructed over the work area which may be kept under a negative pressure to control airborne particulates." There is no clear indication of what portion of the work is considered appropriate for being performed in a tent outside of the fuel/reactor building.

This information is needed to confirm compliance with 10 CFR 72.104(b) and 72.236(d).

Response to 8-3:

As stated in the UFSAR all fuel transfer operations at a reactor site, whether inside the reactor building or through use of some kind of a dry transfer apparatus are to be controlled under the reactors 10CFR50 license (See last paragraph before step 14 on page 5.1-14).

The tenting option is to be considered anytime the containment boundary is breached as part of the unloading operations, i.e. when the vent and siphon port covers are removed to allow sampling of the DSC contents. See Steps 15, 22, 25 in Section 5.1.1.9 for example. Similar to the response to RAI 5-41, 10 CFR 72.104 regulation applies only to the ISFSI (DSCs stored in the HSMs). As stated in response to RAI 5-41 compliance with 10 CFR 50 and 10 CFR 20 assure that radiation workers, non-radiation workers and members of the public are protected during all the transfer, unloading, fuel transfer operations and disposition of the used DSC components. During the transfer operation back to the "unloading" site, all potential accidents which are the same as that during the loading operations are already evaluated through-out the UFSAR in "Accident Analysis" Chapters and demonstrated to meet the requirements of 10 CFR 72.106 for accident conditions.

Note: RAI 8-4 applies to the base SAR Chapter 7, "Radiation Protection"

8-4 Explain Transnuclear's commitment to an ALARA policy for the NUHOMS system, and how it influenced the proposed design features and operating procedures of the OS197L transfer cask system.

The ALARA policy should consider the design, planned operations, and implementation at the general licensee. The ALARA statements in Chapter 7 (Radiation Protection) of the Updated Final Safety Analysis Report for the Standardized NUHOMS Horizontal Modular Storage System for Irradiated Nuclear Fuel seem to focus on a general licensee's ALARA program without commenting on Transnuclear's ALARA policy. Statements regarding ALARA in calculation NUH06L-0500 (Proprietary) also require the same explanation.

This is needed to show compliance with ALARA requirements in 10 CFR Part 20, 10 CFR 72.104(b), and consistent with the guidance in Regulatory Guide 8.8, "Information Relevant to Ensuring that Occupational Radiation Exposures at Nuclear Power Stations Will Be as Low as Is Reasonably Achievable."

Response to 8-4:

Please see response to RAI 5-16 above.

8-5 Explain how ALARA was applied to the design of the OS197L transfer cask system (i.e., the transfer cask plus all the supplemental shielding for the decontamination area and the transfer trailer) for normal and off-normal operations. Clarify the specific ALARA considerations and other operational criteria that were applied when evaluating comparable design alternatives of the OS197 transfer cask for use by general licensees.

From the review of Appendix W and calculation NUH06L-0500, it is not clear where and how ALARA was considered in the design process, when comparing different 75-ton transfer cask designs that resulted in different dose fields. The application of ALARA principles should consider many factors as defined in 10 CFR 20.1003, and be consistent with the guidance in Regulatory Guide 8.8.

This information is necessary to verify compliance with 10 CFR 72.11 and 72.236.

Response to 8-5:

Please see response to RAI 5-16 above.

Note that Calculation NUH06L-0501 "OS197L 75 Ton Transfer Cask As-Built Configuration Shielding Analysis" is revised to include the ALARA practices considered in the selection of the final design of the OS197L TC.

8-6 Explain and justify how the dose rates for the TC on the transfer trailer were calculated. Provide additional dose evaluations for the inner supplemental shield and transfer trailer as appropriate.

From the review of Appendix W and calculation NUH06L-0500, it is not clear how these doses were assessed. Since the transfer cask can have only the inner supplemental top shield (at least for some period of time), there needs to be an assessment of the potential dose rate with only the inner shield installed. The model(s) for assessing the dose rate for the TC on the transfer trailer need to take into account the (apparent) lack of shielding beneath the TC. If there is a limited time assumed between the time when the transfer trailer is moved outside and when the outer shield is placed, this needs to be incorporated into the proposed technical specifications.

This information is needed to confirm compliance with 10 CFR 72.236(d) which requires that sufficient shielding be provided to meet the requirements of 10 CFR 72.104 and 10 CFR 72.106. Specifically, 10 CFR 72.104(a) gives specific limits on the annual dose to any individual beyond the controlled area boundary. 10 CFR 20.1201 specifies the occupational dose limits.

Response to 8-6:

Chapter W.5 has been revised in its entirety to provide a detailed discussion of the shielding evaluation performed for the OS197L TC.

The new Section W.5.4.7 describes the various TC configurations that are evaluated for calculating dose rates including those expected during the various (significant) evolutions of the OS197L TC in the transfer trailer. Dose rates are calculated with a

detailed model of the transfer trailer and OS197L TC with only the inner shield in place and no shielding at the bottom of the trailer. Results from these calculations indicate that the dose rates are low enough to not require any time limits to be incorporated in the technical specifications for placement of the outer top trailer shielding.

Note RAI 8-7 through RAI 8-10 apply to SAR appendix W Chapter 8, "Operating Procedures"

8-7 Clarify the meaning of the phrase "if selected" with respect to the inner and outer shields on the skid. If there is some expectation that either (or both) of these shields may be optional, revise the proposed technical specifications to include a clear statement of the criteria that would govern their use. If these shields are both required, clarify the wording in Chapter W.8 (and elsewhere as necessary).

On Pages W.8-8 and W.8-13 (and possibly in other locations), the phrase "if selected" is used with respect to the inner and outer shields on the skid. There are no apparent criteria for either of these shields being optional.

This information is necessary to confirm compliance with 10 CFR 72.236.

Response to 8-7:

The affected steps in W.8 are revised to eliminate the ambiguity, i.e. "if selected" is removed from the text. No other similar statements involving the inner and outer top trailer shields were identified.

8-8 Provide a complete set of operating procedures for both loading and unloading operations that are specific to the unique operations of the OS197L transfer cask system.

The current operating procedures for the OS197L appear to reference three sets of procedures (the OS197, the OS197L, and a canister). Cross referencing three different sets of procedures is unnecessarily complex and confusing and increases the risk of human error. The OS197L procedures should stand alone and not refer back to the OS197. They may refer to DSC-specific procedures. Care needs to be taken to develop procedures that are clear with respect to any differences in decontamination process, welding, transfer cask lid or interim lid attachment or removal, and any other areas where differences between the OS197 and the OS197L are dictated due to either dose rates or the supplemental shielding required for the OS197L.

This revision is necessary for compliance with 10 CFR 72.11.

Response to 8-8:

Chapter W.8 is revised to provide a complete set of operating procedures for loading operations that are specific to the unique operations of the OS197L transfer cask system. The operational differences specified for loading operations also apply for unloading operations.

8-9 Reword the sentences containing the text "remote crane operation and/or an optical targeting system" wherever it appears with respect to OS197L operations (e.g., Pages W.8 4, W.8 5, W.8 7).

The use of "and/or" implies that remote crane operation is not required, or a remotely-used targeting system is not required. Both of these aspects of operation must be accomplished remotely when using the OS197L, and this is correctly reflected elsewhere in Appendix W.

This information is necessary for compliance with 10 CFR 72.11 and for internal consistency of the UFSAR.

Response to 8-9:

The affected steps in W.8 (pages W.8-4, W.8-5, W.8-7 and W.8-12 are revised to eliminate the ambiguity, i.e. “and/or” is replaced with “and”.

CHAPTER 9 Technical Specifications and Operating Procedures

9-1 Change the table of contents for the technical specifications to be consistent with the contents contained in the technical specification.

The staff performed a check of the Amendment 11 TS Table of Contents versus the referenced TS LCO, Tables and Figures and identified several errors as well as inconsistencies. Examples of these errors and inconsistencies include the following:

a. Section 2, Functional and Operating Limits references Page 1.4-1; this should reference Page 2.1-1

b. Section 5, Administrative Controls, references Page 4.4-1; this should reference Page 5.1-1

c. The List of Tables index table descriptions do not match the full titles of the actual referenced tables; this is in contrast to the List of Figures where the index figure titles fully match the referenced figure, even in cases where the figure title is quite long.

d. TS Table index for Tables 1-2d through 2m all reference with/without CC's; the actual tables reference BPRAs, not CCs. Similarly, the index for Tables 1-5a through 5f should state "w/o CC's" in order to be consistent with previous tables and to match the actual tables' titles.

e. Tables on Pages T-11, 14, 18, 22, 27, 30, and 32 have the term "(concluded)". Should this be (continued)? If (concluded) is correct, then the staff believes that the preceding page(s) should be marked "(continued)" such as on page T-32?

This information is required by the staff to assess compliance with 10 CFR 72.11.

Response to 9-1:

The page numbering format in the Technical Specification is changed to indicate the appropriate section number only – for example, Page 3-1, 3-2 etc represent page numbering in section 3.

The information specified in items a. through c. is corrected in the Technical Specifications.

For item d., the TS Table index is modified to match the actual Table titles, however, the Tables 1-5a through 1-5f continue to state “without CCs” since it conveys the same intent.

For item e., TN’s practice for Tables with multiple pages is to include the term “concluded” on the final page of the table, include the term “continued” for any interim pages, and include neither term on the first page of the table. This convention is applied consistently in the Technical Specifications, with no changes made.

9-2 The definition of Loading Operations and Storage Operations should be changed to be consistent with NUREG-1745.

TS Page 1.1-1 provides definitions of Loading Ops and Storage Ops that do not agree with those in NUREG-1745 in that the last sentence of the same definitions in the NUREG is missing. Also, there is no definition of INTACT FUEL unlike in the NUREG.

This information is required by the staff to assess compliance with 10 CFR 72.11.

Response to 9-2:

In Technical Specification 1.1, definitions of LOADING and STORAGE OPERATIONS are revised appropriately.

The definitions of intact fuel are already included in the respective Technical Specification Tables 1-1a through 1-1ff for the various DSC designs.

9-3 Change or justify the reason for the difference between the definition for Transfer Operations contained in Amendment 11 and the definition contained in NUREG-1745.

NUREG-1745 uses the term TRANSPORT OPERATION but TN uses the term TRANSFER OPERATIONS. Also, TN's definition is quite different than the one in NUREG-1745.

This information is required by the staff to assess compliance with 10 CFR 72.11.

Response to 9-3:

In Technical Specification 1.1, definition of TRANSFER OPERATIONS is revised appropriately. To be consistent, definition of UNLOADING OPERATIONS is also revised.

9-4 Change or justify the text associated with the term description to be consistent with NUREG-1745.

On Page 1.3-1 the text associated with the term DESCRIPTION, uses the word "facility" is several times; however, NUREG-1745 uses the term "cask system."

This information is required by the staff to assess compliance with 10 CFR 72.11.

Response to 9-4:

On the newly re-numbered Technical Specification (page 1.3-1 is now page 1-5), the term "facility" is replaced with "Cask System" to be consistent with NUREG-1745.

9-5 Change or justify the use of the term "perform" in example 1.3-2.

On Page 1.3-2, TN uses the term "perform" under REQUIRED ACTION column. NUREG-1745 uses the term "complete" which would appear to be the proper term. Same comment applies to Page 1.3-3 for example 1.3-3.

This information is required by the staff to assess compliance with 10 CFR 72.11.

Response to 9-5:

The term "perform" is changed to "complete" in all described areas. (Page 1.3-2 and Page 1.3-3 are renumbered as Page 1-6 and Page 1-7 respectively).

9-6 Clarify the phrase on Page 1.4-2 that "performance of the Surveillance initiates the subsequent interval"

It is unclear to the staff if the time clock for the subsequent interval begin at the time that the previous surveillance commenced or when it was completed and signed off as acceptable.

This information is required by the staff to assess compliance with 10 CFR 72.11.

Response to 9-6:

The term "Performance" is changed to "Commencement" to be clear. (Page 1.4-2 is renumbered as Page 1-9).

9-7 Justify why the example on Page 1.4-4 is needed.

The example on Page 1.4-4 is not contained in NUREG-1745.

This information is required by the staff to assess compliance with 10 CFR 72.11.

Response to 9-7:

The example referenced above is removed. This results in the removal of the Page after the renumbered Page 1-10.

9-8 Clarify or justify the wording in LCO 3.0.2.

LCO 3.0.2 refers to "except as provided in LCO 3.0.5." However, LCO 3.0.5 states it is not applicable to a spent fuel storage cask. If so, then why is it referenced by LCO 3.0.2?

This information is required by the staff to assess compliance with 10 CFR 72.11.

Response to 9-8:

The phrase ", except as provided in LCO 3.0.5" is deleted.

9-9 Clarify or justify the wording in LCO 3.1.1.

LCO 3.1.1 contains the statement "Helium shall be used for drainage of bulk water from the DSC." This would seem to imply that other media could be used to perform non-bulk drainage of water. Also, the term "bulk water" is undefined. To clear up any confusion, the staff suggests this be reworded as "Helium shall be used for all drainage of water from the DSC."

This information is required by the staff to assess compliance with 10 CFR 72.11.

Response to 9-9:

LCO 3.1.1 is revised to state "all drainage of liquid water"

9-10 Clarify or justify the wording associated with "CONDITION" and the REQUIRED ACTION A.1.2 found on Page 3.1-2.

On Page 3.1-2 under CONDITION, it appears that a note that is included in subsequent LCOs, see 3.1.2 for example, is missing.

With regard to REQUIRED ACTION A.1.2, if the inability to obtain the required vacuum pressure is indeed the result of a leak in the weld, then once the vacuum system is secured, the DSC is now at a lower pressure than ambient pressure and air will start being drawn into the DSC. This will expose hot dry fuel elements to air. This is an undesirable condition. Given that the completion time is 30 days, perhaps consideration should be given to requiring the DSC be filled with helium to at least ambient pressure while weld repair is pursued so as to preclude drawing air into the DSC upwards of 30 days.

This information is required by the staff to assess compliance with 10 CFR 72.11.

Response to 9-10:

Page 3.1-2 is renumbered as Page 3-4.

REQUIRED ACTION A.2 for LCO 3.1.1 is revised to change the minimum pressure from 0.5 to 1.0 atmosphere. A new note is also added under the "CONDITION".

9-11 Clarify and justify the DSCs that are applicable to the proposed LCO 3.1.2 on Page 3.1-3. Clarify how this LCO is applied to canister design variations with new model designations, that may have been added by Transnuclear or the general licensee to the FSAR under 10 CFR 72.48 change authority.

On Page 3.1-3 when the LCO refers to DSCs such as the 24P, 52B, 61BT, 32PT, 24PTH,61BTH, etc..., does this include all of the various subtypes as well such as 24PTH-S-LC, 61-BTH Type 1 or 61-BTH Type 2 for example?

This information is required by the staff to assess compliance with 10 CFR 72.11.

Response to 9-11:

Page 3.1-3 is renumbered as Page 3-5.

The note is applicable to all the DSC designs as listed in the LCO 3.1.2 including any subtypes. As an example 24PTH-S-LC DSC has to meet the requirements applicable to the 24PTH DSC listed in this LCO. If the canister design variation with new model designations is added under 10 CFR 72.48 change authority, then by the rule of 10CFR72.48, the LCO is also applicable to those model numbers.

9-12 Clarify and justify the required actions in proposed LCO 3.1.4 on page 3.1.8.

The required action for B.1 appears to require further detail on additional actions. The additional actions after unloading the DSC should be clarified to address temporary placement of the DCS into a transfer cask (for a certain amount of time), or transfer of the DSC back to the fuel handling building.

This information is required by the staff to assess compliance with 10 CFR 72.11.

Response to 9-12:

Page 3.1-8 is renumbered as Page 3-10.

The REQUIRED ACTION B.1 in LCO 3.1.4 is revised to add additional details as requested.

9-13 Specify the year for the ASME code reference contained on Page 5.2-3.

On Page 5.2-3 under 5.2.4.b) reference is made to ASME Code Article NB-5000. The year is missing in this reference and should be specified.

This information is required by the staff to assess compliance with 10 CFR 72.11.

Response to 9-13:

Page 5.2-3 is renumbered as Page 5-6.

The ASME code edition and applicable addenda for each DSC is provided in revised TS Section 4.2.2.

9-14 Specify how often the HSM-H concrete testing is expected to be performed and identify the components that exceed 350°F in proposed technical specification 5.5.

There should be a clarification on how often testing is performed and for which modules, such every module or batches of modules. The staff believes that this technical specification requirement should be more specific as this is an attribute that clearly needs to be reviewed by the NRC inspectors.

This information is required by the staff to assess compliance with 10 CFR 72.11.

Response to 9-14:

Technical Specification 5.5 has been revised to specify when testing is required. Since the concrete mix is the same for all components of the HSM-H module (base, door and roof) there is no need to specify in the TS which HSM-H components exceed 350°F.

9-15 Correct reference on Page T-2.

On Page T-2 under specifications for burnup, it refers to Figure 1.1. There is no such figure. The staff believes the correct reference should be to Table 1-2b.

This information is required by the staff to assess compliance with 10 CFR 72.11.

Response to 9-15:

There is no need to reference any figure or table. The reference to "Figure 1.1" is deleted in Technical Specifications Table 1-1b. The corresponding table in the UFSAR (Table 3.1-2) is also changed to match.

9-16 Justify or correct the wording on Page T-8.

Regarding Page T-8, Page 4-2 for the 32PT DSC refers to Basket Type A, B, C or D. Table 1-1h on Page T-8 makes no reference to the 4 basket types. This seems inconsistent with the way that Table 1-1k is laid out with regard to the 61BT DSC with Basket Type A, B or C.

This information is required by the staff to assess compliance with 10 CFR 72.11.

Response to 9-16:

Table 1-1h is modified to specify the poison loading as a function of basket type, consistent with Table 1-1k.

9-17 Justify or correct the wording on Page T-35.

Regarding Page T-35, Table 1-1ff refers to Basket Types 1A or 2B through 1E or 2E. The table on Page 4-2 for the 32PTH should be modified to reflect the 1 or 2 option just as that table does for the 24PTH DSC.

This information is required by the staff to assess compliance with 10 CFR 72.11.

Response to 9-17:

The table on Page 4.2 for the 32PTH1 is modified to reflect the 1 or 2 option.

9-18 Justify or correct the wording on Page F-15, F-16, F-18, F-20, F-21, F-22, F-23, and F-24 that refers to Note 2 on these pages.

On Page F-15 where is the (2) superscript on this page that refers one to Note 2? Same comment on F-16 for Notes 1,2 and 3. Same comment for Note 1 on F-18, F-20, F-21, F-22, F-23, and F-24.

This information is required by the staff to assess compliance with 10 CFR 72.11.

Response to 9-18:

The notes not called out with superscripted indicators are applicable to the entire figure. To be clear, they are added to the figure title.

9-19 Provide a cross reference and a draft Certificate of Compliance to demonstrate how Amendment 10 technical specifications 1.1.3, 1.1.4, and 1.1.6 are to be incorporated into the Amendment 11 CoC.

TN's Amendment 11 application contains a cross-reference table between the proposed Amendment 10 and proposed Amendment 11. The Amendment 11 application also includes a partial markup of the Amendment 10 CoC showing changes associated with Amendment 11. The cross reference table notes that TS 1.1.3, "Quality Assurance," TS 1.1.4, "Heavy Loads," and TS 1.1.6, "Preoperational Testing and Training Exercise," have been deleted from the Amendment 11 TSs and placed in the CoC. TN's Amendment 11 application does not contain a markup for how these TS items have been addressed in the CoC. While the QA TS may have a reference to an existing CoC condition it is not clear that all attributes in the old TS are covered by the CoC condition. In addition, the proposed CoC Conditions for replacement of TS 1.1.4 and TS 1.1.6 were not provided in the Amendment 11 application.

This information is required by the staff to assess compliance with 10 CFR 72.11.

Response to 9-19:

The CoC is annotated with conditions reflecting the provisions of Amendment 10 technical specifications (TS) 1.1.3, 1.1.4, and 1.1.6, as follows:

TS 1.1.3 becomes CoC Condition 4, "QUALITY ASSURANCE"
TS 1.1.4 becomes CoC Condition 6, "HEAVY LOADS REQUIREMENTS"
TS 1.1.6 becomes CoC Condition 7, "PRE-OPERATIONAL TESTING AND TRAINING EXERCISE"

These new conditions are made consistent with corresponding CoC 1030 NUHOMS® HD conditions.

Note: RAIs 9-20 through RAI 9-26 are associated with the thermal review of the technical specifications

9-20 Provide a detailed definition for Independent Spent Fuel Storage Installation (ISFSI) that conforms to the definition given in NUREG-1745 Page 1 of 32 or justify why this language is not included.

This information is required by the staff to assess compliance with 10 CFR 72.11.

Response to 9-20:

Based on discussions with the NRC staff the definition of ISFSI is modified based on the definition found in 10 CFR 72.3, "Definitions."

9-21 Provide the criterion for the 30 days COMPLETION TIME for the CONDITION, "If the required vacuum pressure cannot be obtained" contained in Section 3.1 Fuel Integrity (Page 3.1-2) (see also RAI 9-10).

The criterion for 30 days COMPLETION TIME for the CONDITION, "If the required vacuum pressure cannot be obtained" should be provided. This information should also be captured in the Technical Specification Bases for this TS.

This information is required by the staff to assess compliance with 10 CFR 72.11.

Response to 9-21:

LCO 3.1.1 requires the use of helium for all water removal from the DSC before vacuum drying. Therefore, vacuum drying operations are carried out with water replaced by helium. The UFSAR thermal analysis demonstrates that if helium is used as a cover gas for water removal, the conductivity of helium during vacuum drying operations assures that cladding temperatures remain below the cladding temperature limit. The DSC/TC annulus also contains water during vacuum drying process. Because the cladding temperatures are below the cladding temperature limits, the criterion of 30 days is used as a reasonable time period for identifying and repairing vacuum drying system or seal welds.

The UFSAR Chapter 10 Bases are revised to add this clarification.

9-22 Provide the criterion for selection of 14 days COMPLETION TIMES for Condition A, "The required backfill pressure cannot be obtained or stabilized." Refer to Section 3.1.2 DSC Helium Backfill Pressure (Page 3.1-3)

The criterion for selection of 14 days COMPLETION TIMES for Condition A, "The required backfill pressure cannot be obtained or stabilized," should be provided. This information should also be captured in the Technical Specification Bases for this TS.

This information is required by the staff to assess compliance with 10 CFR 72.11.

Response to 9-22:

With helium atmosphere in the DSC cavity, the UFSAR thermal analysis demonstrates that the cladding temperatures remain below the cladding temperature limit. Note that no credit is taken for any convection of helium in the DSC cavity. Because the cladding temperatures are below the cladding temperature limit, the criterion of 14 days is used as a reasonable time period for identifying and repairing vacuum drying system or seal welds.

The UFSAR Chapter 10 Bases are revised to add this clarification.

9-23 Explain in TS Bases document, why 24 PHB DSC is not included in the LCO 3.1.3. Refer to Section 3.1.3 Time Limit for Completion of DSC Transfer (24PTH, 61BTH, Type2 or 32 PTH1 DSC Only) (Page 3.1-5, 3.1-6).

Explain in TS Bases document, why 24 PHB DSC is not included in the LCO 3.1.3.

This information is required by the staff to assess compliance with 10 CFR 72.11.

Response to 9-23:

The 24PHB DSC is only authorized for a maximum heat load of 24 kW/DSC. The thermal analysis performed for the 24PHB as documented in Appendix N.4 demonstrates that the steady state cladding temperatures during TRANSFER OPERATIONS are below the cladding temperature limit. Therefore, there is no time limit for completion of the 24PHB DSC transfer.

The UFSAR Chapter 10 Bases are revised to add this clarification.

9-24 Provide in the TS bases what the basis is for the 24 hours limit on COMPLETION TIME for LCO 3.1.4 "The air temperature rise is greater than the above specification." Refer to Section 3.1.4 HSM Maximum Air Exit Temperatures with a Loaded DSC (Page 3.1-8)

For cases A.2 and B.1 the COMPLETION Time is 'Determined by the analysis'. Please specify a time for completion of analysis.

This information is required by the staff to assess compliance with 10 CFR 72.11.

Response to 9-24:

The air temperature rise of greater than the specified amount can occur if the inlet and/or outlet vents are blocked. The blocked vent analysis documented in various thermal analysis sections of the UFSAR for the various canisters show that concrete and fuel cladding temperatures are below the analyzed limits if the surveillance frequency of once per day (daily) is used to inspect for the blockage. Therefore, 24 hour completion time was selected for REQUIRED ACTION A.1.

COMPLETION TIME for REQUIRED ACTIONS A.2 and B.1 is revised to add a time limit of 30 days to perform the analysis. 30 days time limit is selected because with the vents open, there is significant margin to the accident condition temperature limits on the concrete and fuel cladding temperatures. The UFSAR Chapter 12, Bases is revised to add this clarification.

9-25 Provide in the TS Bases document the detailed TS Bases for various items 1 through 10 under Section 4.3.3. Refer to Section 4.3.3, "Site Specific Parameters and Analyses" (Pages 4-5, 4-6)

This information is required by the staff to assess compliance with 10 CFR 72.11.

Response to 9-25:

TS Bases are provided for items 1 through 10 under Section 4.3.3.

9-26 Include detailed sections on "Cask Loading, Unloading, and Preparation Program" and "ISFSI Operations Program" as specified in NUREG-1745. Refer to Section 5.0 Administrative Control (Page 5.1-1)

NUREG-1745 states that the Standard TS include sections on Cask Loading, Unloading, and Preparation Program (under 5.1.2) and ISFSI Operations Program (Under 5.1.3). These specific sections are missing from the proposed Standard Technical Specifications associated with Amendment 11.

This information is required by the staff to assess compliance with 10 CFR 72.11.

Note: Question 9-27 applies to SAR appendix W Chapter W.8, "Operating Procedures"

Response to 9-26:

Section 5.1 is revised to add the generic verbage from Sections 5.1.2 and 5.1.3 of NUREG-1745. The requirements listed in the NUREG are already contained in the LCOs or other portions of the Design and Administrative Control sections of CoC 1004 Technical Specifications as discussed below:

Section 5.1.2: Cask Loading, Unloading and Preparation Program:

1. Vacuum Drying Times and Pressure - included in LCO 3.1.1.
2. Inerting Pressure and Purity – included in LCO 3.1.2 (NA on purity as air is not allowed for water removal from the DSC cavity no credit is taken for any convection due to helium in the DSC cavity).
3. Leak Testing – included in Section 5.2.4.c
4. Surface Dose Rates – included in Section 5.4.
5. Ambient Temperature and Spent Fuel Temperature – included in Section 4.3.3 for ambient temperature limits (NA for SFP water temperature).
6. Spent Fuel Pool Boron Concentration Limits – included in LCO 3.2.1.
7. High burn-up fuel requirement per ISG11- Fuel Specification Tables of LCO 1.2.1 demonstrate that ISG-11 cladding temperature limits are satisfied for all conditions.

5.1.3: ISFSI Operations Program:

1. Minimum cask center-to-center spacing – No minimum spacing requirements required for the NUHOMS system other than the required HSM storage configuration included in Section 4.3.1.
2. Pad Parameters – included in the site specific parameters specified in Section 4.3.3.
3. Maximum Lifting Heights for the Cask System – included in Section 5.3.1.

Note: Question 9-27 applies to SAR appendix W Chapter W.8, "Operating Procedures"

9-27 Provide a discussion in the SAR regarding expectations for the remote handling equipment design and reliability.

The reliability and operation of the remote handling device are crucial to worker safety from an ALARA perspective, and to safety of the cask system. TN should consider providing a discussion in the SAR regarding a description of the design and operational criteria that is expected of the remote handling devices associated with the lifting and manipulation of the 75-ton cask system. TN should also consider operational parameters for the handling device that are being assumed in the dose analyses for an event in which the remote handling system "hangs" and the canister has to be recovered. (See also RAI 5-9(g) and 5-42).

In addition, the potential frequency of malfunctions is not clear for remote handling operations of the OS197L TC at any potential general licensee, and should be considered an off-normal event in accordance with Design Event criteria in ANSI/ANS 57.9. This is important because one primary bases for safety during this handling phase of the storage canister relies on distance between individuals and the bare transfer cask. This premise may not be true during recovery from an anticipated occurrence, malfunction, or other event with the remote handling equipment.

This information is needed to assess compliance with 10 CFR 72.11 and 10 CFR 72.236(d).

Response to 9-27:

Technical Specification 4.4 and Appendix W.8 are revised to include the requirement for the use of remote handling of the bare OS197L TC and also use of laser/optical targeting and camera or similar equipment. Technical Specification 5.2.4 is also revised to add the requirement of considerations for the redundancy of remote operations equipment including quality standards. This technical specification also contains the requirement for the dose assessment of recovery from a potential malfunction of the remote handling devices. The ALARA aspect of using remote handling and observation tools is also controlled under the licensee's 10 CFR 50 license and health physics program, including their program to comply with 10 CFR 20. Therefore, TN believes that remote operations are adequately covered in the Technical Specifications and SAR for the OS197L TC.

Technical Specifications Cross Reference Table between proposed Amendment 10 and proposed Amendment 11

Amendment 10 Tech Spec	Amendment 11 Tech Spec
1.1.1 Reg. Requirement of General License, Site Parameters	4.3.2 and 4.3.3 Site Specific Parameters and Analyses
1.1.2 Operating Procedures	5.1 Procedures
1.1.4 Quality Assurance	Part of CoC
1.1.5 Heavy Loads	Part of CoC
1.1.5 Training Module	5.2.2 Training Program
1.1.6 Pre-Operational Testing and Training Exercise	Part of CoC
1.1.7 Special Requirements for First System in Place	Not in STS
1.1.8 Surveillance Requirement Applicability	3.0 Limiting Condition for Operation (LCO) and Surveillance Requirements (SR) Applicability
1.1.9 Supplement Shielding	4.3.3 Site Specific Parameters and Analyses
1.1.10 HSM-H Storage Configuration	4.3.1 Storage Configuration
1.1.11 Hydrogen Gas Monitoring for 61BTH and 32PTH1 DSCs	5.2.6 Hydrogen Gas Monitoring for 24P, 52B, 24PHB, 61BT, 32PT, 24PTH, 61BTH and 32PTH1 DSCs
1.1.12 Codes and Standards	4.2 Codes and Standards
1.2.1 Fuel Specifications	2.1 Fuel to be stored in the standardized NUHOMS® System and 4.3 – Canister Criticality control
1.2.2 DSC Vacuum Pressure During Drying	3.1.1 DSC Bulk Water Removal Medium and Vacuum Drying Pressure
1.2.3, 1.2.3a DSC Helium Backfill Pressure for Various DSCs	3.1.2 DSC Helium Backfill Pressure for various DSCs
1.2.4, 1.2.4a DSC Helium Leak Rate of Inner Seal Weld for Various DSCs	5.2.4c Leak Test
1.2.5 DSC Dye Penetrant Test of Closure Welds	5.2.4b DSC Dye Penetrant Test of Closure Welds
1.2.6 Deleted	N/A
1.2.7, 1.2.7a, 1.2.7b, 1.2.7c, 1.2.7d, 1.2.7e, 1.2.7f, 1.2.7g HSM Dose Rates Loaded with Various DSC's	5.4.1 and 5.4.2 Dose Rate Limits for HSM with various DSCs
1.2.8, 1.2.8a, 1.2.8b, 1.2.8c HSM Maximum Exit Air Temperature with Various Loaded DSC's	3.1.4 HSM Maximum Air Exit Temperature with Various Loaded DSCs
1.2.9 Transfer Cask Alignment with HSM or HSM-H	5.3.3 Transfer Cask Alignment with HSM or HSM-H
1.2.10, 1.2.13, 1.2.14 and 1.2.14a TC/DSC Lifting Heights and Ambient Temperatures for Various DSCs	5.3.1 A and 5.3.1 B TC/DSC Lifting / Handling Height Limits
1.2.11, 1.2.11a through e TC Dose Rates Loaded with Various DSCs	5.2.4e Transfer Cask Dose Rates
1.2.12 Maximum DSC Removable Surface Contamination	5.2.4d Maximum DSC Removable Surface Contamination

Technical Specifications Cross Reference Table between proposed Amendment 10 and proposed Amendment 11 (continued)

Amendment 10 Tech Spec	Amendment 11 Tech Spec
1.2.13 See line above for 1.2.10, which includes 1.2.13	—
1.2.14 See line above for 1.2.10, which includes 1.2.14 and 14a	—
1.2.15, 1.2.15a, 1.2.15b, 1.2.15c, 1.2.15d Boron Concentration in the DSC Cavity Waters for Various DSCs	3.2.1 Boron Concentration of Spent Fuel Pool Water and Water Added to DSC Cavity for Various DSCs
1.2.16 Provisions of TC Seismic Restraint inside the Spent Fuel Pool Building	4.3.3 Site Specific Parameters and Analysis
1.2.17, 1.2.17a, 1.2.17b, 1.2.17c Vacuum Drying Duration Limits for Various DSCs	Deleted due to use of Helium
1.2.18, 1.2.18a, 1.2.18b Time Limit for Completion of 24PTH, 61BTH Type 2 or 32PTH1 DSC Transfer Operations	3.1.3 Time Limit for Completion of TRANSFER OPERATIONS (24PTH, 61BTH Type 2 or 32PTH1 DSC Only)
1.2.19 61BTH and 32PTH1 DSC Bulkwater Removal Medium	3.1.1 DSC Bulkwater Removal Medium and Vacuum Drying Pressure
1.3.1 Visual Inspection of HSM Air Inlets and Outlets (front wall and roof birdscreens)	5.2.5a Daily visual inspection of HSM Air Inlets and Outlets (front wall and roof birdscreens)
1.3.2 HSM Thermal Performance	5.2.5b Daily HSM Temperature Measurements
From CoC condition 7, concrete testing for HSM-H	5.5 Concrete testing for HSM-H
From CoC condition 8, HSM-H configuration changes	5.6 HSM-H configuration changes
TN's commitment to NRC in 1/25/07 meeting: OS197L (75 ton version) cask shall not be used for plants with 100 ton crane capacity	Included in new Section 4.4.1
NRC Request: supplement shielding shall be used with OS197L (75 ton version) cask	Included in new Section 4.4.2
NRC Request: modify TN's proposed wording on "Contingency Planning" for abnormal events, eliminate terms contingency planning, abnormal events, high dose rates	Added to Section 5.2.4 "Radiation Protection Program"
NRC Request: include a requirement for user to perform dose assessment ahead of time and augment Part 20 program and address recovery from a potential malfunction of a remote handling device	Added to Section 5.2.4 "Radiation Protection Program" and also modified Appendix W.10 Occupational Exposure Section to include exposure due to recovery operations from a potential malfunction of a remote handling device (Crane failure)
NRC Request: include the requirement of dose assessment for cases when Transfer cask requires use of remote operations.	Added to Section 5.2.4 "Radiation Protection Program"

Enclosure 4 to TN E-25820

Amendment 11 Revision 1 Proposed changes to the NUHOMS® CoC 1004 Certificate of Compliance (Amendment 9), the associated Technical Specifications, and the UFSAR (Revision 9)

NRC FORM 651
(10-2004)
10 CFR 72

U.S. NUCLEAR REGULATORY COMMISSION

CERTIFICATE OF COMPLIANCE FOR SPENT FUEL STORAGE CASKS

The U.S. Nuclear Regulatory Commission is issuing this Certificate of Compliance pursuant to Title 10 of the Code of Federal Regulations, Part 72, "Licensing Requirements for Independent Storage of Spent Nuclear Fuel and High-Level Radioactive Waste" (10 CFR Part 72). This certificate is issued in accordance with 10 CFR 72.238, certifying that the storage design and contents described below meet the applicable safety standards set forth in 10 CFR Part 72, Subpart L, and on the basis of the Final Safety Analysis Report (FSAR) of the cask design. This certificate is conditional upon fulfilling the requirements of 10 CFR Part 72, as applicable, and the conditions specified below.

Certificate No.	Effective Date	Expiration Date	Docket No.	Amendment No.	Amendment Effective Date	Package Identification No.
1004	1/23/95	1/23/2015	72-1004	~~9~~ 11	~~April 17, 2007~~ tbd	USA/72-1004

Issued To: (Name/Address)

Transnuclear, Inc.
7135 Minstrel Way, Suite 300
Columbia, Maryland 21045

Safety Analysis Report Title

Transnuclear, Inc., "Final Safety Analysis Report for the Standardized NUHOMS® Horizontal Modular Storage System for Irradiated Nuclear Fuel"

CONDITIONS

1. Casks authorized by this certificate are hereby approved for use by holders of 10 CFR Part 50 licenses for nuclear power reactors at reactor sites under the general license issued pursuant to 10 CFR Part 72.210 subject to the conditions specified by 10 CFR 72.212 and the attached Technical Specifications.

2. The holder of this certificate who desires to change the certificate or Technical Specifications shall submit an application for amendment of the certificate or Technical Specifications.

3. CASK:

a. Model Nos. Standardized NUHOMS®-24P, -52B, -61BT, -32PT, -24PHB, and -24PTH, -61BTH and -32PTH1

The two digits refer to the number of fuel assemblies stored in the dry shielded canister (DSC), the character P for pressurized water reactor (PWR) or B for boiling water reactor (BWR) is to designate the type of fuel stored, and T is to designate that the DSC is intended for transportation in a 10 CFR Part 71 approved package. The characters H or HB refer to designs qualified for fuel with burnup greater than 45 GWd/Mtu.

b. Description

The Standardized NUHOMS® System is certified as described in the final safety analysis report (FSAR) and in the NRC's Safety Evaluation Report (SER). The Standardized NUHOMS® System is a horizontal canister system composed of a steel dry shielded canister (DSC), a reinforced concrete horizontal storage module (HSM), and a transfer cask (TC). The welded DSC provides confinement and criticality control for the storage and transfer of irradiated fuel. The concrete module provides radiation shielding while allowing cooling of the DSC and fuel by natural convection during storage. The TC is used for transferring the DSC from/to the Spent Fuel Pool Building to/from the HSM.

The principal component subassemblies of the DSC are the shell with integral bottom cover plate, bottom shield plug or shield plug assemblies, ram/grapple ring, top shield plug or shield plug assemblies, top cover plate, and basket assembly. The shell length is fuel-specific. The internal basket assembly for the 24P, 24PHB, and 52B DSCs is composed of guide sleeves, support rods, and spacer disks. This assembly is designed to hold 24 PWR fuel assemblies or 52 BWR assemblies.

An alternate basket assembly configuration, consisting of assemblies of stainless steel fuel compartments held in place by basket rails and a holdown ring, is designed to hold 61 BWR assemblies. The 32PT DSC basket assembly configuration is similar, consisting of welded stainless steel plates or tubes that make up a grid of fuel compartments supported by aluminum basket rails, and is designed to accommodate 32 PWR assemblies. The 24 PTH DSC basket assembly configuration consists of stainless steel tubes supported by basket rails and is designed to accommodate 24 PWR assemblies.

The basket assembly aids in the insertion of the fuel assemblies, enhances subcriticality during loading operations, and provides structural support during a hypothetical drop accident. The DSC is designed to slide from the transfer cask into the HSM and back without undue galling, scratching, gouging, or other damage to the sliding surfaces.

The HSM is a reinforced concrete unit with penetrations located at the top and bottom of the walls for air flow, and is designed to store DSCs with up to 24.0 kW decay heat. The penetrations are protected from debris intrusions by wire mesh screens during storage operation. The DSC Support Structure, a structural steel frame with rails, is installed within the HSM. An alternate version of the HSM design, designated as HSM-H, provided with enhanced shielding and heat rejection features, is designed to store DSCs with up to 40.8 kW decay heat.

The TC is designed and fabricated as a lifting device to meet NUREG-0612 and ANSI N14.6 requirements. It is used for transfer operations within the Spent Fuel Pool Building and for transfer operations to/from the HSM. The TC is a cylindrical vessel with a bottom end closure assembly and a bolted top cover plate. Two upper lifting trunnions are located near the top of the cask for downending/uprighting and lifting of the cask in the Spent Fuel Pool Building. The lower trunnions, located near the base of the cask, serve as the axis of rotation during downending/uprighting operations and as supports during transport to/from the Independent Spent Fuel Storage Installation (ISFSI). The 32PT DSC is transferred in a TC with a radial liquid neutron shield.

With the exception of the TC, fuel transfer and auxiliary equipment necessary for ISFSI operations are not included as part of the Standardized NUHOMS® System referenced in this Certificate of Compliance (CoC). Such site-specific equipment may include, but is not limited to, special lifting devices, the transfer trailer, and the skid positioning system.

c. Drawings

The drawings for the Standardized NUHOMS® System are contained in Appendices E, K, M, N, and P of the FSAR.

, T and U

d. Basic Components

The basic components of the Standardized NUHOMS® System that are important to safety are the DSC, HSM, and TC. These components are described in Section 4.2, Table K.2-8 (Appendix K), Table M.2-18 (Appendix M), and Table P.2-17 (Appendix P) of the FSAR.

, Section T.2.3 (Appendix T) and Section U.2.3 (Appendix U)

CERTIFICATE OF COMPLIANCE
FOR SPENT FUEL STORAGE CASKS
Supplemental Sheet

Certificate No. 1004
Amendment No. 11 ~~9~~

4. Fabrication activities shall be conducted in accordance with a Commission approved quality assurance program which satisfies the applicable requirements of 10 CFR Part 72, Subpart G, and which is established, maintained, and executed with regard to the cask system.

5. Notification of fabrication schedules shall be made in accordance with the requirements of 10 CFR 72.232(d).

6. All Standardized NUHOMS® Systems must be fabricated and used in accordance with CoC No. 1004, Amendment No. 9. Standardized NUHOMS® Systems that were previously fabricated and put into operation by general licensees in accordance with the original CoC, or Amendment Nos. 1, 2, 3, 4, 5, 6, 7, and 8 may continue to be used under the appropriate CoC or Amendment.

~~7.~~ 6 HSM-H concrete shall be tested for elevated temperatures to verify that there are no significant signs of spalling or cracking and that the concrete compressive strength is greater than that assumed in the structural analysis. Tests shall be performed at or above the calculated peak temperature and for a period no less than the 40 hour duration of HSM-H blocked vent transient for components exceeding 350 degrees F.

~~8.~~ 7 The use of HSM-H thermal performance methodology is allowed for evaluating HSM-H configuration changes except for changes to the HSM-H cavity height, cavity width, elevation and cross-sectional areas of the HSM-H air inlet/outlet vents, total outside height, length and width of HSM-H if these changes exceed 8% of their nominal design values shown on the approved CoC Amendment No. 8 drawings.

FOR THE NUCLEAR REGULATORY COMMISSION

Robert A. Nelson, Chief
Licensing Branch
Division of Spent Fuel Storage and Transportation
Office of Nuclear Material Safety
and Safeguards

INSERT A
INSERT B
INSERT C
SEE ATTACHED

Attachment: A. Technical Specifications

Dated: ~~April 17, 2007~~ TBD

Insert C

QUALITY ASSURANCE

Activities in the areas of design, purchase, fabrication, assembly, inspection, testing, operation, maintenance, repair, modification of structures, systems and components and decommissioning shall be conducted in accordance with a quality assurance program that satisfies the applicable requirements of 10 CFR Part 72, Subpart G, and that is established, maintained, and executed with regard to the cask system.

Insert B

HEAVY LOADS REQUIREMENTS

Each lift of a DSC and TC must be made in accordance with the existing heavy loads requirements and procedures of the licensed facility at which the lift is made. A plant-specific safety review (under 10 CFR 50.59 or 10 CFR 72.48, if applicable) is required to show operational compliance with NUREG-0612 and/or existing plant-specific heavy loads requirements.

Insert A

PRE-OPERATIONAL TESTING AND TRAINING EXERCISE

A dry run training exercise of the loading, closure, handling, unloading, and transfer of the standardized NUHOMS® System shall be conducted by each licensee prior to the first use of the system to load spent nuclear fuel assemblies. The training exercise shall not be conducted with spent nuclear fuel in the canister. The dry run may be performed in an alternate step sequence from the actual procedural guidelines in the SAR. The dry run shall include but not be limited to the following:

Loading Operations

a. Fuel Loading
b. DSC sealing, drying, and backfilling operations
c. TC downending and transport to the ISFSI
d. DSC transfer to the HSM

Unloading Operations

a. DSC retrieval from the HSM
b. Flooding of the DSC
c. Opening of the DSC

AMENDMENT NO. 11 TO COC 1004

TECHNICAL SPECIFICATIONS FOR THE STANDARDIZED NUHOMS® HORIZONTAL MODULAR STORAGE SYSTEM

DOCKET 72-1004

Table of Contents **Page**

1.0 Use and Application 1-1

1.1 Definitions 1-1

1.2 Logical Connectors 1-3

1.3 Completion Times 1-5

1.4 Frequency 1-8

2.0 Functional and Operating Limits 2-1

2.1 Fuel to be Stored in the Standardized NUHOMS® System 2-1

2.2 Functional and Operating Limits Violations 2-2

3.0 Limiting Condition for Operation (LCO) and Surveillance Requirement (SR) Applicability 3-1

3.1 Fuel Integrity 3-3

3.1.1 DSC Bulkwater Removal Medium and Vacuum Drying Pressure 3-3

3.1.2 DSC Helium Backfill Pressure 3-5

3.1.3 Time Limit for Completion of DSC Transfer (24PTH, 61BTH Type 2 or 32PTH1 DSC Only). 3-7

3.1.4 HSM Maximum Air Exit Temperature with a Loaded DSC 3-9

3.2 Cask Criticality Control 3-11

4.0 Design Features 4-1

4.1 Canister Criticality Control 4-2

4.2 Codes and Standards 4-3

4.2.1 Horizontal Storage Module (HSM) 4-3

4.2.2 Dry Shielded Canister (DSC) 4-3

4.2.3 Transfer Cask (TC) 4-3

4.2.4 ASME Code Alternatives 4-4

4.3 Storage Location Design Features 4-25

4.3.1 Storage Configuration 4-25

4.3.2 Concrete Storage Pad Properties to Limit DSC Gravitational Loadings Due to Postulated Drops 4-25

4.3.3 Site Specific Parameters and Analyses 4-26

4.4 TRANSFER CASK Design Features 4-28

5.0 Administrative Controls 5-1
5.1 Procedures 5-1
5.1.1 DSC Loading, Unloading and Preparation Program 5-2
5.1.2 ISFSI Operations Program 5-2
5.2 Programs 5-3
5.2.1 10CFR72.48 Evaluation Program 5-3
5.2.2 Training Program 5-4
5.2.3 Radiological Environmental Monitoring Program 5-4
5.2.4 Radiation Protection Program 5-5
5.2.5 HSM or HSM-H Thermal Monitoring Program 5-8
5.2.6 Hydrogen Gas Monitoring for 61BT, 32PT, 24PTH, 61BTH and 32PTH1 DSCs 5-9
5.3 Cask TRANSFER Controls 5-10
5.3.1 TC/DSC Lifting/Handling Height Limits 5-10
5.3.2 Cask Drop 5-11
5.3.3 TRANSFER CASK Alignment with HSM or HSM-H 5-11
5.3.4 *Supplemental Shielding Drop onto OS197L TC* 5-11
5.4 HSM or HSM-H Dose Rate Evaluation Program 5-12
5.5 Concrete Testing for HSM-H 5-14
5.6 HSM-H Configuration Changes 5-15

List of Tables

Table 1-1a *PWR Fuel Specifications for Fuel to be Stored in the Standardized NUHOMS®-24P DSC* *T-1*
Table 1-1b *BWR Fuel Specifications for Fuel to be Stored in the Standardized NUHOMS®-52B DSC* *T-2*
Table 1-1c *BWR Fuel Specifications for Fuel to be Stored in the Standardized NUHOMS®-61BT DSC* *T-3*
Table 1-1d *BWR Fuel Assembly Design Characteristics(1)(2) for the NUHOMS®-61BT DSC* *T-4*
Table 1-1e *PWR Fuel Specifications for Fuel to be Stored in the NUHOMS®-32PT DSC* *T-5*
Table 1-1f *PWR Fuel Assembly Design Characteristics for the NUHOMS®-32PT DSC* *T-6*
Table 1-1g *Initial Enrichment and Required Number of PRAs and Minimum Soluble Boron Loading (NUHOMS®-32PT DSC)* *T-7*

Table 1-1h	*B10 Specification for the NUHOMS®-32PT Poison Plates*	*T-8*
Table 1-1i	*PWR Fuel Specification for Fuel to be Stored in the Standardized NUHOMS®-24PHB DSC*	*T-9*
Table 1-1j	*BWR Fuel Specification of Damaged Fuel to be Stored in the Standardized NUHOMS®-61BT DSC*	*T-10*
Table 1-1k	*B10 Specification for the NUHOMS®-61BT Poison Plates*	*T-12*
Table 1-1l	*PWR Fuel Specification for the Fuel to be Stored in the NUHOMS®-24PTH DSC*	*T-13*
Table 1-1m	*PWR Fuel Assembly Design Characteristics for the NUHOMS®-24PTH DSC*	*T-15*
Table 1-1n	*Thermal and Radiological Characteristics for Control Components Stored in the NUHOMS®-24PTH DSC*	*T-16*
Table 1-1p	*Maximum Assembly Average Initial Enrichment v/s Neutron Poison Requirements for the NUHOMS®-24PTH DSC (Intact Fuel)*	*T-17*
Table 1-1q	*Maximum Assembly Average Initial Enrichment v/s Neutron Poison Requirements for the NUHOMS®-24PTH DSC (Damaged Fuel)*	*T-19*
Table 1-1r	*B10 Specification for the NUHOMS®-24PTH Poison Plates*	*T-20*
Table 1-1s	*Specification for the Metal Matrix Composite (MMC) for the NUHOMS®-24PTH Poison Plates*	*T-20*
Table 1-1t	*BWR Fuel Specification for the Fuel to be Stored in the NUHOMS®-61BTH DSC*	*T-21*
Table 1-1u	*BWR Fuel Assembly Design Characteristics(1) for the NUHOMS®-61BTH DSC*	*T-23*
Table 1-1v	*BWR Fuel Assembly Lattice Average Enrichment v/s Minimum B10 Requirements for the NUHOMS®-61BTH DSC Poison Plates (Intact Fuel)*	*T-24*
Table 1-1w	*BWR Fuel Assembly Lattice Average Enrichment v/s Minimum B10 Requirements for the NUHOMS®-61BTH DSC Poison Plates (Damaged Fuel)*	*T-25*
Table 1-1aa	*PWR Fuel Specification for the Fuel to be Stored in the NUHOMS®-32PTH1 DSC*	*T-26*
Table 1-1bb	*PWR Fuel Assembly Design Characteristics for the NUHOMS®-32PTH1 DSC*	*T-28*
Table 1-1cc	*Maximum Assembly Average Initial Enrichment v/s Neutron Poison Requirements for 32PTH1 DSC (Intact Fuel)*	*T-29*
Table 1-1dd	*Maximum Assembly Average Initial Enrichment v/s Neutron Poison Requirements for 32PTH1 DSC (Damaged Fuel)*	*T-31*
Table 1-1ee	*Thermal and Radiological Characteristics for Control Components Stored in the NUHOMS®-32PT and NUHOMS®-32PTH1 DSCs*	*T-34*
Table 1-1ff	*B10 Specification for the NUHOMS®-32PTH1 Poison Plates*	*T-35*
Table 1-2a	*PWR Fuel Qualification Table for the Standardized NUHOMS®-24P DSC (Fuel Without BPRAs)*	*T-36*

Table 1-2b	*BWR Fuel Qualification Table for the Standardized NUHOMS®-52B DSC*	T-37
Table 1-2c	*PWR Fuel Qualification Table for the Standardized NUHOMS®-24P DSC (Fuel with BPRAs)*	T-38
Table 1-2d	*PWR Fuel Qualification Table* for 1.2 kW *per Assembly Fuel without BPRAs for the NUHOMS®-32PT DSC*	T-39
Table 1-2e	*PWR Fuel Qualification Table for 0.87 kW per Assembly Fuel without BPRAs for the NUHOMS®-32PT DSC*	T-40
Table 1-2f	*PWR Fuel Qualification Table for 0.7 kW Fuel without BPRAs per Assembly for the NUHOMS®-32PT DSC*	T-41
Table 1-2g	*PWR Fuel Qualification Table for 0.63 kW per Assembly Fuel without BPRAs for the NUHOMS®-32PT DSC*	T-42
Table 1-2h	*PWR Fuel Qualification Table for 0.6 kW per Assembly Fuel without BPRAs for the NUHOMS®-32PT DSC*	T-43
Table 1-2i	*PWR Fuel Qualification Table for 1.2 kW per Assembly Fuel with BPRAs for the NUHOMS®-32PT DSC*	T-44
Table 1-2j	*PWR Fuel Qualification Table for 0.87 kW per Assembly Fuel with BPRAs for the NUHOMS®-32PT DSC*	T-45
Table 1-2k	*PWR Fuel Qualification Table for 0.7 kW per Assembly Fuel with BPRAs for the NUHOMS®-32PT DSC*	T-46
Table 1-2l	*PWR Fuel Qualification Table for 0.63 kW per Assembly Fuel with BPRAs for the NUHOMS®-32PT DSC*	T-47
Table 1-2m	*PWR Fuel Qualification Table for 0.6 kW per Assembly Fuel with BPRAs for the NUHOMS®-32PT DSC*	T-48
Table 1-2n	*PWR Fuel Qualification Table for Zone 1 with 0.7 kW per Assembly, Fuel with or without BPRAs, for the NUHOMS®-24PHB DSC*	T-49
Table 1-2o	*PWR Fuel Qualification Table for Zone 2 with 1.0 kW per Assembly, Fuel with or without BPRAs, for the NUHOMS®-24PHB DSC*	T-50
Table 1-2p	*PWR Fuel Qualification Table for Zone 3 with 1.3 kW per Assembly, Fuel with or without BPRAs, for the NUHOMS®-24PHB DSC*	T-51
Table 1-2q	*BWR Fuel Qualification Table for NUHOMS®-61BT DSC*	T-52
Table 1-3a	*PWR Fuel Qualification Table for Zone 1 Fuel with 1.7 kW per Assembly for the NUHOMS®-24PTH DSC (Fuel w/o CCs)*	T-53
Table 1-3b	*PWR Fuel Qualification Table for Zone 2 Fuel with 2.0 kW per Assembly for the NUHOMS®-24PTH DSC (Fuel w/o CCs)*	T-54
Table 1-3c	*PWR Fuel Qualification Table for Zone 3 Fuel with 1.5 kW per Assembly for the NUHOMS®-24PTH DSC (Fuel w/o CCs)*	T-55
Table 1-3d	*PWR Fuel Qualification Table for Zone 4 Fuel with 1.3 kW per Assembly for the NUHOMS®-24PTH DSC (Fuel w/o CCs)*	T-56
Table 1-3e	*PWR Fuel Qualification Table for Zone 1 Fuel with 1.7 kW per Assembly for the NUHOMS®-24PTH DSC (Fuel w/ CCs)*	T-57
Table 1-3f	*PWR Fuel Qualification Table for Zone 2 Fuel with 2.0 kW per Assembly for the NUHOMS®-24PTH DSC (Fuel w/ CCs)*	T-58

Table 1-3g *PWR Fuel Qualification Table for Zone 3 Fuel with 1.5 kW per Assembly for NUHOMS®-24PTH DSC (Fuel w/ CCs)* T-59
Table 1-3h *PWR Fuel Qualification Table for Zone 4 Fuel with 1.3 kW per Assembly for the NUHOMS®-24PTH DSC (Fuel w/ CCs)* T-60
Table 1-4a *BWR Fuel Qualification Table for Zone 1 Fuel with 0.22 kW per Assembly for the NUHOMS®-61BTH DSC* T-62
Table 1-4b *BWR Fuel Qualification Table for Zone 2 Fuel with 0.35 kW per Assembly for the NUHOMS®-61BTH DSC* T-63
Table 1-4c *BWR Fuel Qualification Table for Zone 3 Fuel with 0.393 kW per Assembly for the NUHOMS®-61BTH DSC* T-64
Table 1-4d *BWR Fuel Qualification Table for Zone 4 Fuel with 0.48 kW per Assembly for the NUHOMS®-61BTH DSC* T-65
Table 1-4e *BWR Fuel Qualification Table for Zone 5 Fuel with 0.54 kW per Assembly for the NUHOMS®-61BTH DSC* T-66
Table 1-4f *BWR Fuel Qualification Table for Zone 6 Fuel with 0.7 kW per Assembly for the NUHOMS®-61BTH DSC* T-67
Table 1-5a *PWR Fuel Qualification Table for Zone 1 Fuel with 0.6 kW per Assembly for the NUHOMS®-32PTH1 DSC (Fuel without CCs)* T-69
Table 1-5b *PWR Fuel Qualification Table for Zone 2 Fuel with 0.8 kW per Assembly for the NUHOMS®-32PTH1 DSC (Fuel without CCs)* T-70
Table 1-5c *PWR Fuel Qualification Table for Zone 3 or Zone 4 Fuel with 1.0 kW per Assembly for the NUHOMS®-32PTH1 DSC (Fuel without CCs)* .. T-71
Table 1-5d *PWR Fuel Qualification Table for Zone 5 Fuel with 1.3 kW per Assembly for the NUHOMS®-32PTH1 DSC (Fuel without CCs)* T-72
Table 1-5e *PWR Fuel Qualification Table for Zone 5 with Damaged Fuel with 1.2 kW per Assembly for the NUHOMS®-32PTH1 DSC (Fuel without CCs)* T-73
Table 1-5f *PWR Fuel Qualification Table for Zone 6 Fuel with 1.5 kW per Assembly for the NUHOMS®-32PTH1 DSC (Fuel without CCs)* T-74

List of Figures

Figure 1-1 PWR Fuel Criticality Acceptance Curve F-1
Figure 1-2 Heat Load Zoning Configuration 1 for the NUHOMS®-32PT DSC F-2
Figure 1-3 Heat Load Zoning Configuration 2 for the NUHOMS®-32PT DSC F-3
Figure 1-4 Heat Load Zoning Configuration 3 for the NUHOMS®-32PT DSC F-4
Figure 1-5 Required PRA Locations for the NUHOMS®-32PT DSC Configuration with Four PRAs F-5
Figure 1-6 Required PRA Locations for the NUHOMS®-32PT DSC Configuration with Eight PRAs F-6
Figure 1-7 Required PRA Locations for the NUHOMS®-32PT DSC Configuration with Sixteen PRAs F-7
Figure 1-8 Heat Load Zoning Configuration for Fuel Assemblies (with or without BPRAs) Stored in NUHOMS®-24PHB DSC – Configuration 1 ..... F-8
Figure 1-9 Heat Load Zoning Configuration for Fuel Assemblies (with or without BPRAs) Stored in NUHOMS®-24PHB DSC – Configuration 2 ..... F-9

Figure 1-10 Soluble Boron Concentration vs. Fuel Initial U-235 Enrichment for the 24PHB System F-10
Figure 1-11 Heat Load Zoning Configuration No. 1 for 24PTH-S and 24PTH-L DSCs (with or without Control Components) F-11
Figure 1-12 Heat Load Zoning Configuration No. 2 for 24PTH-S and 24PTH-L DSCs (with or without Control Components) F-12
Figure 1-13 Heat Load Zoning Configuration No. 3 for 24PTH-S and 24PTH-L DSCs (with or without Control Components) F-13
Figure 1-14 Heat Load Zoning Configuration No. 4 for 24PTH-S and 24PTH-L DSCs (with or without Control Components) F-14
Figure 1-15 Heat Load Zoning Configuration No. 5 for 24PTH-S-LC DSC (with or without Control Components) F-15
Figure 1-16 Location of Damaged Fuel Inside 24PTH DSC F-16
Figure 1-17 Heat Load Zoning Configuration No. 1 for Type 1 or Type 2 61BTH DSCs F-17
Figure 1-18 Heat Load Zoning Configuration No. 2 for Type 1 or Type 2 61BTH DSCs F-18
Figure 1-19 Heat Load Zoning Configuration No. 3 for Type 1 or Type 2 61BTH DSCs F-19
Figure 1-20 Heat Load Zoning Configuration No. 4 for Type 1 or Type 2 61BTH DSCs F-20
Figure 1-21 Heat Load Zoning Configuration No. 5 for Type 2 61BTH DSCs F-21
Figure 1-22 Heat Load Zoning Configuration No. 6 for Type 2 61BTH DSCs F-22
Figure 1-23 Heat Load Zoning Configuration No. 7 for Type 2 61BTH DSCs F-23
Figure 1-24 Heat Load Zoning Configuration No. 8 for Type 2 61BTH DSCs F-24
Figure 1-25 Location of Damaged Fuel Inside 61BTH DSC F-25
Figure 1-26 Heat Load Zoning Configuration No. 1 for 32PTH1-S, 32PTH1-M and 32PTH1-L DSCs (Type 1 Baskets) F-26
Figure 1-27 Heat Load Zoning Configuration No. 2 for 32PTH1-S, 32PTH1-M and 32PTH1-L DSCs (Type 1 or Type 2 Baskets) F-27
Figure 1-28 Heat Load Zoning Configuration No. 3 for 32PTH1-S, 32PTH1-M and 32PTH1-L DSCs (Type 1 or Type 2 Baskets) F-28

1.0 USE AND APPLICATION

1.1 Definitions

---------- NOTE ----------

The defined terms of this section appear in capitalized type and are applicable throughout these Technical Specifications and Bases.

Term	Definition
ACTIONS	ACTIONS shall be that part of a Specification that prescribes Required Actions to be taken under designated Conditions within specified Completion Times.
HORIZONTAL STORAGE MODULE (HSM)	The HSM (Standardized HSM, HSM-H, high seismic option for HSM-H or other models enveloped by these designs) is a reinforced concrete structure for storage of a loaded DSC at a spent fuel storage installation. e.g., Standardized HSM includes HSM Model 80, Model 102, Model 152 or Model 202 as described in the UFSAR.
DRY SHIELDED CANISTER (DSC)	A DSC (Model 24P, 52B, 61BT, 32PT, 24PHB, 24PTH, 61BTH, 32PTH1 or other models enveloped by these designs) is a welded vessel that provides confinement of fuel assemblies in an inert atmosphere.
INDEPENDENT SPENT FUEL STORAGE INSTALLATION (ISFSI)	*A complex designed and constructed for the interim storage of spent nuclear fuel, solid reactor-related GTCC waste, and other radioactive materials associated with spent fuel and reactor-related GTCC waste storage.*
LOADING OPERATIONS	LOADING OPERATIONS include all licensed activities on a DSC in a TRANSFER CASK while it is being loaded with fuel assemblies. LOADING OPERATIONS begin when the first fuel assembly is placed in the DSC and end when the TRANSFER CASK is ready for TRANSFER OPERATIONS *(i.e., when the cask is in a horizontal position on the trailer). LOADING OPERATIONS does not include DSC transfer between the TC and the HSM.*
STORAGE OPERATIONS	STORAGE OPERATIONS include all licensed activities that are performed at the ISFSI while a DSC containing fuel assemblies is located in an HSM on the storage pad within the ISFSI perimeter. *STORAGE OPERATIONS does not include DSC transfer between the TC and the HSM.*

1.1 Definitions (continued)

TRANSFER CASK (TC)	The TC (Standardized TC, OS197, OS197H, OS197L, OS197FC, OS197FC-B, OS200, OS200FC TC) consists of a licensed NUHOMS® onsite transfer cask.
TRANSFER OPERATIONS	TRANSFER OPERATIONS include all licensed activities involving the movement of a TRANSFER CASK loaded with a DSC containing fuel assemblies. TRANSFER OPERATIONS begin when the TRANSFER CASK is placed horizontal on the transfer trailer *ready for TRANSFER* OPERATIONS and end when the *TC is at its destination and no longer secured on the transfer trailer. TRANSFER OPERATIONS include transfer of a DSC between the HSM and the TC.*
UNLOADING OPERATIONS	UNLOADING OPERATIONS include all licensed activities on a DSC to unload fuel assemblies. UNLOADING OPERATIONS begin when the *TC is no longer secured on the transfer trailer* and end when the last fuel assembly has been removed from the DSC. *UNLOADING OPERATIONS does not include DSC transfer between the TC and the HSM.*
FUEL BUILDING	The FUEL BUILDING is the site-specific area or a facility governed by the 10CFR50 regulations, where the LOADING OPERATIONS take place.

1.2 Logical Connectors

PURPOSE

The purpose of this section is to explain the meaning of logical connectors.

Logical connectors are used in Technical Specifications (TS) to discriminate between, and yet connect, discrete Conditions, Required Actions, Completion Times, Surveillances, and Frequencies. The only logical connectors that appear in TS are AND and OR. The physical arrangement of these connectors constitutes logical conventions with specific meanings.

BACKGROUND

Several levels of logic may be used to state Required Actions. These levels are identified by the placement (or nesting) of the logical connectors and by the number assigned to each Required Action. The first level of logic is identified by the first digit of the number assigned to a Required Action and the placement of the logical connector in the first level of nesting (i.e., left justified with the number of the Required Action). The successive levels of logic are identified by additional digits of the Required Action number and by successive indentions of the logical connectors.

When logical connectors are used to state a Condition, Completion Time, Surveillance, or Frequency, only the first level of logic is used, and the logical connector is left justified with the statement of the Condition, Completion Time, Surveillance, or Frequency.

EXAMPLES

The following examples illustrate the use of logical connectors:

EXAMPLE 1.2-1

ACTIONS

CONDITION	REQUIRED ACTION	COMPLETION TIME
A. LCO (Limiting Condition for Operation) not met.	A.1 Verify... AND A.2 Restore...	

In this example the logical connector AND is used to indicate that when in Condition A, both Required Actions A.1 and A.2 must be completed.

(continued)

1.2 Logical Connectors (concluded)

EXAMPLES (continued)

EXAMPLE 1.2-2

ACTIONS

CONDITION	REQUIRED ACTION	COMPLETION TIME
A. LCO not met.	A.1 Stop... OR A.2 A.2.1 Verify... AND A.2.2 A.2.2.1 Reduce... OR A.2.2.2 Perform... OR A.3 Remove...	

This example represents a more complicated use of logical connectors. Required Actions A.1, A.2, and A.3 are alternative choices, only one of which must be performed as indicated by the use of the logical connector OR and the left justified placement. Any one of these three Actions may be chosen. If A.2 is chosen, then both A.2.1 and A.2.2 must be performed as indicated by the logical connector AND. Required Action A.2.2 is met by performing A.2.2.1 or A.2.2.2. The indented position of the logical connector OR indicates that A.2.2.1 and A.2.2.2 are alternative choices, only one of which must be performed.

1.3 Completion Times

PURPOSE	The purpose of this section is to establish the Completion Time convention and to provide guidance for its use.
BACKGROUND	Limiting Conditions for Operation (LCOs) specify the lowest functional capability or performance levels of equipment required for safe operation of the facility. The ACTIONS associated with an LCO state Conditions that typically describe the ways in which the requirements of the LCO are not met. Specified with each stated Condition are Required Action(s) and Completion Times(s).
DESCRIPTION	The Completion Time is the amount of time allowed for completing a Required Action. It is referenced to the time of discovery of a situation (e.g., equipment or variable not within limits) that requires entering an ACTIONS Condition unless otherwise specified, providing the *Cask System* is in a specified condition stated in the Applicability of the LCO. Required Actions must be completed prior to the expiration of the specified Completion Time. An ACTIONS Condition remains in effect and the Required Actions apply until the Condition no longer exists or the *Cask System* is not within the LCO Applicability. Once a Condition has been entered, subsequent subsystems, components, or variables expressed in the Condition, discovered to be not within limits, will <u>not</u> result in separate entry into the Condition unless specifically stated. The Required Actions of the Condition continue to apply to each additional failure, with Completion Times based on initial entry into the Condition.

(continued)

1.3 Completion Times (continued)

EXAMPLES

The following examples illustrate the use of Completion Times with different types of Conditions and Changing Conditions.

EXAMPLE 1.3-1

ACTIONS

CONDITION	REQUIRED ACTION	COMPLETION TIME
B. Required Action and associated Completion Time not met.	B.1 *Complete* Action B.1 AND B.2 *Complete* Action B.2	12 hours 36 hours

Condition B has two Required Actions. Each Required Action has its own separate Completion Time. Each Completion Time is referenced to the time that Condition B is entered.

The Required Actions of Condition B are to complete action B.1 within 12 hours AND complete action B.2 within 36 hours. A total of 12 hours is allowed for completing action B.1 and a total of 36 hours (not 48 hours) is allowed for completing action B.2 from the time that Condition B was entered. If action B.1 is completed within 6 hours, the time allowed for completing action B.2 is the next 30 hours because the total time allowed for completing action B.2 is 36 hours.

EXAMPLES

EXAMPLE 1.3-2

ACTIONS

CONDITION	REQUIRED ACTION	COMPLETION TIME
A. One system not within limit.	A.1 Restore system to within limit.	7 days
B. Required Action and associated Completion Time not met.	B.1 *Complete* Action B.1. AND B.2 *Complete* Action B.2.	12 hours 36 hours

When a system is determined to not meet the LCO, Condition A is entered. If the system is not restored within 7 days, Condition B is also entered and the Completion Time clocks for Required Actions B.1 and B.2 start. If the system is restored after Condition B is entered, Condition A and B are exited, and therefore, the Required Actions of Condition B may be terminated.

(continued)

1.3 Completion Times (concluded)

EXAMPLES (continued)

EXAMPLE 1.3-3

ACTIONS

----------NOTE----------
Separate Condition entry is allowed for each component.

CONDITION	REQUIRED ACTION	COMPLETION TIME
A. LCO not met.	A.1 Restore compliance with LCO.	4 hours
B. Required Action and associated Completion Time not met.	B.1 *Complete* Action B.1. AND B.2 *Complete* Action B.2.	6 hours 12 hours

The Note above the ACTIONS Table is a method of modifying how the Completion Time is tracked. If this method of modifying how the Completion Time is tracked was applicable only to a specific Condition, the Note would appear in that Condition rather than at the top of the ACTIONS Table.

The Note allows Condition A to be entered separately for each component, and Completion Times tracked on a per component basis. When a component is determined to not meet the LCO, Condition A is entered and its Completion Time starts. If subsequent components are determined to not meet the LCO, Condition A is entered for each component and separate Completion Times start and are tracked for each component.

IMMEDIATE COMPLETION TIME

When "Immediately" is used as a Completion Time, the Required Action should be pursued without delay and in a controlled manner.

1.4 Frequency

PURPOSE	The purpose of this section is to define the proper use and application of Frequency requirements
DESCRIPTION	Each Surveillance Requirement (SR) has a specified Frequency in which the Surveillance must be met in order to meet the associated Limiting Condition for Operation (LCO). An understanding of the correct application of the specified Frequency is necessary for compliance with the SR. The "Specified Frequency" is referred to throughout this section and each of the Specifications of Section 3.0, Limiting Condition for Operation (LCO) and Surveillance Requirement (SR) Applicability. The "Specified Frequency" consists of the requirements of the Frequency column of each SR, as well as certain Notes in the Surveillance column that modify performance requirements. Situations where a Surveillance could be required (i.e., its Frequency could expire), but where it is not possible or not desired that it be performed until sometime after the associated LCO is within its Applicability, represent potential SR 3.0.4 conflicts. To avoid these conflicts, the SR (i.e., the Surveillance or the Frequency) is stated such that it is only "required" when it can be and should be performed. With a SR satisfied, SR 3.0.4 imposes no restriction. (continued)

1.4 Frequency (continued)

EXAMPLES (continued)

The following examples illustrate the various ways that Frequencies are specified:

EXAMPLE 1.4-1

SURVEILLANCE REQUIREMENTS

SURVEILLANCE	FREQUENCY
Verify pressure within limit.	12 hours

Example 1.4-1 contains the type of SR most often encountered in the Technical Specifications (TS). The Frequency specifies an interval (12 hours) during which the associated Surveillance must be performed at least one time. *Commencement* of the Surveillance initiates the subsequent interval. Although the Frequency is stated as 12 hours, an extension of the time interval to 1.25 times the stated Frequency is allowed by SR 3.0.2 for operational flexibility. The measurement of this interval continues at all times, even when the SR is not required to be met per SR 3.0.1 (such as when the equipment is determined to not meet the LCO, a variable is outside specified limits, or the unit is outside the Applicability of the LCO). If the interval specified by SR 3.0.2 is exceeded while the facility is in a condition specified in the Applicability of the LCO, the LCO is not met in accordance with SR 3.0.1.

If the interval as specified by SR 3.0.2 is exceeded while the facility is not in a condition specified in the Applicability of the LCO for which performance of the SR is required, the Surveillance must be performed within the Frequency requirements of SR 3.0.2 prior to entry into the specified condition. Failure to do so would result in a violation of SR 3.0.4.

(continued)

1.4 Frequency (concluded)

EXAMPLES (continued)

EXAMPLE 1.4-2

SURVEILLANCE REQUIREMENTS

SURVEILLANCE	FREQUENCY
Verify flow is within limits.	Once within 12 hours prior to starting activity AND 24 hours thereafter

Example 1.4-2 has two Frequencies. The first is a one-time performance Frequency, and the second is of the type shown in Example 1.4-1. The logical connector "AND" indicates that both Frequency requirements must be met. Each time the example activity is to be performed, the Surveillance must be performed prior to starting the activity.

The use of "once" indicates a single performance will satisfy the specified Frequency (assuming no other Frequencies are connected by "AND"). This type of Frequency does not qualify for the 25% extension allowed by SR 3.0.2.

"Thereafter" indicates future performances must be established per SR 3.0.2, but only after a specified condition is first met (i.e., the "once" performance in this example). If the specified activity is canceled or not performed, the measurement of both intervals stops. New intervals start upon preparing to restart the specified activity.

2.0 FUNCTIONAL AND OPERATING LIMITS

2.1 Fuel to be Stored in the Standardized NUHOMS® System

The spent nuclear fuel to be stored in the Standardized NUHOMS® System is specific to each DSC model as listed below and shall meet all the requirements of the applicable Fuel Specification Tables, including the cross-referenced figures and tables listed in their applicable Fuel Specification Tables.

DSC MODEL	Applicable Fuel Specification
24P	Table 1-1a
52B	Table 1-1b
61BT	Table 1-1c and Table 1-1j
32PT	Table 1-1e
24PHB	Table 1-1i
24PTH	Table 1-1l
61BTH	Table 1-1t
32PTH1	Table 1-1aa

2.2 Functional and Operating Limits Violations

If any Functional and Operating Limit of 2.1 is violated, the following actions shall be completed:

2.2.1 The affected fuel assemblies shall be placed in a safe condition.

2.2.2 Notify the NRC Operations Center per the requirements of 10CFR72.75.

2.2.3 Within 30 days, submit a separate report which describes the cause of the violation and the actions taken to restore compliance and prevent recurrence.

3.0 LIMITING CONDITION FOR OPERATION (LCO) AND SURVEILLANCE REQUIREMENT (SR) APPLICABILITY

LCO 3.0.1	LCOs shall be met during specified conditions in the Applicability, except as provided in LCO 3.0.2.
LCO 3.0.2	Upon discovery of a failure to meet an LCO, the Required Actions of the associated Conditions shall be met. If the LCO is met or is no longer applicable prior to expiration of the specified Completion Time(s), completion of the Required Action(s) is not required, unless otherwise stated.
LCO 3.0.3	Not applicable to a spent fuel storage cask.
LCO 3.0.4	When an LCO is not met, entry into a specified condition in the Applicability shall not be made except when the associated ACTIONS to be entered permit continued operation in the specified condition in the Applicability for an unlimited period of time. This Specification shall not prevent changes in specified conditions in the Applicability that are required to comply with ACTIONS, or that are related to the unloading of a DSC. Exceptions to this Specification are stated in the individual Specifications. These exceptions allow entry into specified conditions in the Applicability when the associated ACTIONS to be entered allow operation in the specified condition in the Applicability only for a limited period of time.
LCO 3.0.5	Not applicable to a spent fuel storage cask.

(continued)

3.0 Limiting Condition for Operation (LCO) and Surveillance Requirement (SR) Applicability (continued)

SR 3.0.1	SRs shall be met during the specified conditions in the Applicability for individual LCOs, unless otherwise stated in the SR. Failure to meet a Surveillance, whether such failure is experienced during the performance of the Surveillance or between performances of the Surveillance, shall be failure to meet the LCO. Failure to perform a Surveillance within the specified Frequency shall be failure to meet the LCO except as provided in SR 3.0.3. Surveillances do not have to be performed on equipment or variables outside specified limits.
SR 3.0.2	The specified Frequency for each SR is met if the Surveillance is performed within 1.25 times the interval specified in the Frequency, as measured from the previous performance or as measured from the time a specified condition of the Frequency is met. For Frequencies specified as "once," the above interval extension does not apply. If a Completion Time requires periodic performance on a "once per . . ." basis, the above Frequency extension applies to each performance after the initial performance. Exceptions to this Specification are stated in the individual Specifications.
SR 3.0.3	If it is discovered that a Surveillance was not performed within its specified Frequency, then compliance with the requirement to declare the LCO not met may be delayed, from the time of discovery, up to 24 hours or up to the limit of the specified Frequency, whichever is less. This delay period is permitted to allow performance of the Surveillance. If the Surveillance is not performed within the delay period, the LCO must immediately be declared not met, and the applicable Condition(s) must be entered. When the Surveillance is performed within the delay period and the Surveillance is not met, the LCO must immediately be declared not met, and the applicable Condition(s) must be entered.
SR 3.0.4	Entry into a specified condition in the Applicability of an LCO shall not be made unless the LCO's Surveillances have been met within their specified Frequency. This provision shall not prevent entry into specified conditions in the Applicability that are required to comply with ACTIONS or that are related to the unloading of a DSC. (concluded)

3.1 Fuel Integrity

3.1.1 DSC Bulkwater Removal Medium and Vacuum Drying Pressure

LCO 3.1.1	Medium: Helium shall be used for *all drainage of liquid water* from the DSC. Pressure: The DSC vacuum drying pressure shall be sustained at or below 3 Torr (3 mm Hg) absolute for a period of at least 30 minutes following evacuation.
APPLICABILITY:	During LOADING OPERATIONS but before TRANSFER OPERATIONS.

(continued)

3.1 Fuel Integrity (continued)

ACTIONS

CONDITION	REQUIRED ACTION	COMPLETION TIME
Note: Not applicable until SR 3.1.1 is performed. A. If the required vacuum pressure cannot be obtained.	A.1 A.1.1 Confirm that the vacuum drying system is properly installed. Check and repair the vacuum drying system as necessary. OR A.1.2 Check and repair the seal weld between the inner top cover plate/ top shield plug assembly and the DSC shell. OR A.2 Establish helium pressure of at least 1.0 atm and no greater than 15 psig in the DSC. OR A.3 Flood the DSC with spent fuel pool water or water meeting the requirements of LCO 3.2.1 if applicable submerging all fuel assemblies.	30 days 30 days 30 days

SURVEILLANCE REQUIREMENTS

SURVEILLANCE		FREQUENCY
SR 3.1.1	Verify that the DSC vacuum pressure is less than, or equal to, 3 Torr (3 mm Hg) absolute for at least 30 minutes following evacuation.	Once per DSC, after an acceptable NDE of the inner top cover plate/top shield plug assembly.

(continued)

3.1 Fuel Integrity (continued)

3.1.2 DSC Helium Backfill Pressure

LCO 3.1.2 (a) 24P or 52B DSC helium backfill pressure shall be 2.5 psig ± 2.5 psig (stable for 30 minutes after filling) after completion of vacuum drying.

(b) 61BT, 32PT, 24PHB, 24PTH, 61BTH or 32PTH1 DSC helium backfill pressure shall be 2.5 psig ± 1.0 psig (stable for 30 minutes after filling) after completion of vacuum drying.

APPLICABILITY: During LOADING OPERATIONS but before TRANSFER OPERATIONS.

ACTIONS

CONDITION	REQUIRED ACTION	COMPLETION TIME
Note: Not applicable until SR 3.1.2 is performed. A. The required backfill pressure cannot be obtained or stabilized.	A.1 A.1.1 Maintain helium atmosphere in the DSC cavity. AND A.1.2 Confirm, check and repair or replace as necessary the vacuum drying system, helium source and pressure gauge. AND A.1.3 Check and repair as necessary the seal weld between the inner top cover plate/top shield plug assembly and the DSC shell.	14 days
	OR A.2 Establish the DSC helium backfill pressure to within the limit. If pressure exceeds the criterion, release a sufficient quantity of helium to lower the DSC cavity pressure.	14 days (continued)

CONDITION	REQUIRED ACTION	COMPLETION TIME
	OR	
	A.3 Flood the DSC with spent fuel pool water or water meeting the requirements of LCO 3.2.1 if applicable submerging all fuel assemblies.	14 days

SURVEILLANCE REQUIREMENTS

SURVEILLANCE		FREQUENCY
SR 3.1.2	(a) Verify that the 24P or 52B DSC helium backfill pressure is 2.5 psig ± 2.5 psig stable for 30 minutes after *filling*. (b) Verify that the 61BT, 32PT, 24PHB, 24PTH, 61BTH or 32PTH1 DSC helium backfill pressure is 2.5 psig ± 1 psig stable for 30 minutes after *filling*	Once per DSC, after the completion of LCO 3.1.1 actions.

(continued)

3.1 Fuel Integrity (continued)

3.1.3 Time Limit for Completion of DSC Transfer (24PTH, 61BTH Type 2 or 32PTH1 DSC Only).

LCO 3.1.3

DSC Model	Basket Type	Heat Load Zoning Configuration No. (HLZC)	Time Limit (hours)
24PTH-S or 24PTH-L DSC	1A, 1B or 1C (with Aluminum Inserts)	4	No limit
	1A, 1B or 1C	1, 2 or 3	9.5
	2A, 2B or 2C (without Aluminum Inserts)	1, 2, 3 or 4	25
61BTH, Type 2 DSC Only	NA	1, 2, 3, or 4	No limit
		5, 6 or 8	26
		7	13
32PTH1 DSC	NA	3	No limit
		1	13
		2	14 (Intact Fuel) 10 (Damaged Fuel)

NOTE

The time limit for completion of a DSC transfer is defined as the time elapsed in hours after the initiation of draining of TC/DSC annulus water until the completion of insertion of the DSC into the HSM-H.

APPLICABILITY: During LOADING OPERATIONS AND TRANSFER OPERATIONS.

(continued)

ACTIONS

CONDITION	REQUIRED ACTION	COMPLETION TIME
Note: Not applicable until SR 3.1.3 is performed. A. The required time limit for completion of a DSC transfer not met.	A.1 If the TC is in the cask handling area in a vertical orientation, remove the TC top cover plate and fill the TC/DSC annulus with clean water.	2 hours
	OR	
	A.2 If the TC is in a horizontal orientation on transfer skid, initiate air circulation in the TC/DSC annulus by starting one of the blowers provided on the transfer skid.	2 hours
	OR	
	A.3 Return the TC to the cask handling area and follow action A.1 above.	2 hours

SURVEILLANCE REQUIREMENTS

SURVEILLANCE		FREQUENCY
SR 3.1.3	Verify that the time limit for completion of DSC transfer is met.	Once per DSC, after the completion of LCO 3.1.2 actions or after the completion of draining of TC/DSC annulus water.

(continued)

3.2 Fuel Integrity (continued)

3.2.1 HSM Maximum Air Exit Temperature with a Loaded DSC

LCO 3.1.4 The maximum air temperature rise through the HSM allowed is a function of the decay heat load of the DSC and the HSM model as listed below:

HSM	DSC Model	Maximum Decay Heat Load, kW	Maximum Air Temperature Rise Allowed, °F
Standardized HSM	24P, 52B, 61BT, 32PT, 24PHB, 24PTH-S-LC or 61BTH, Type 1	24.0	100
HSM-H	24PTH-S or 24PTH-L	40.8	100
	24PTH-S-LC	24.0	70
	61BTH, Type 2	31.2	90
	61BTH, Type 1	22.0	70
	32PTH1	40.8	110

APPLICABILITY: During STORAGE OPERATIONS

---------- NOTE ----------

If a DSC placed within a HSM has a heat load less than the maximum heat load listed above, the maximum air temperature rise allowed shall be determined by a calculation using the same methodology and input documents in the FSAR. Air temperatures must be measured in such a manner as to obtain representative values of inlet and outlet air temperatures.

(continued)

ACTIONS

CONDITION	REQUIRED ACTION	COMPLETION TIME
Note: Not applicable until SR 3.1.4 is performed.		
A. The air temperature rise is greater than the above specification.	A.1 Check the inlets and outlets for any blockage and remove blockage if found.	24 hours
	AND	
	A.2 If the inlets or outlets were not blocked, determine if environmental factors are causing the temperature rise to exceed limits. If environmental factors are the cause then take additional measurements and perform analysis to assess the actual performance of the system.	Determined by the analysis. *The analysis completion time is 30 days.*
B. Excessive temperatures cause the system to perform in an unacceptable manner and/or the temperatures cannot be controlled to acceptable limits.	B.1 Unload the DSC from the HSM *into the TC for a certain amount of time. Verify that condition of HSM interior cavity is not the cause of excessive temperatures and correct if necessary.*	Determined by the analysis. *The analysis completion time is 30 days.*
	OR	
	B.2 Return the DSC/TC to the FUEL BUILDING.	*Determined by the analysis. The analysis completion time is 30 days.*

SURVEILLANCE REQUIREMENTS

SURVEILLANCE		FREQUENCY
SR 3.1.4	The temperature rise between the ambient temperature and the vent outlet temperature will be measured and recorded verifying that HSM maximum air temperature rise limit is satisfied.	24 hours after DSC insertion into the HSM. These measurements are repeated on a daily basis after insertion into the HSM or every 24 hours following the occurrence of an accident event, until an equilibrium condition is achieved.

(continued)

3.3 Cask Criticality Control

LCO 3.2.1 The boron concentration of the spent fuel pool water and the water added to the cavity of a loaded DSC (24P, 32PT, 24PHB, 24PTH, or 32PTH1) shall be greater than or equal to the boron concentration below:

DSC Model	Minimum Boron Concentration
24P	a. 2000 ppm for fuel with an equivalent unirradiated assembly average enrichment of less than or equal to 1.45 wt. % U-235 per Figure 1-1. b. 2350 ppm for fuel with an equivalent unirradiated assembly average enrichment of greater than 1.45 wt. % U-235 per Figure 1-1.
32PT	Per Table 1-1g
24PHB	a. 2350 ppm for fuel with an assembly average enrichment of less than or equal to 4.0 wt. % U-235 based on the spent fuel assembly with the highest assembly average initial enrichment in the DSC. b. Per Figure 1-10 for fuel with an assembly average initial enrichment of greater than 4.0 wt. % U-235 based on the spent fuel assembly with the highest assembly average initial enrichment in the DSC.
24PTH	Per Table 1-1p or Table 1-1q
32PTH1	Per Table 1-1cc or Table 1-1dd

APPLICABILITY: During LOADING OPERATIONS and UNLOADING OPERATIONS with fuel and *liquid* water in the DSC Cavity.

(continued)

ACTIONS

CONDITION	REQUIRED ACTION	COMPLETION TIME
A. Dissolved boron concentration limit not met.	A.1 Suspend loading of fuel assemblies into DSC AND A.2	Immediately
	A.2.1 Add boron and re-sample, and test the concentration until the boron concentration is shown to be greater than that required OR	Immediately
	A.2.2 Remove all fuel assemblies from DSC	Immediately

SURVEILLANCE REQUIREMENTS

SURVEILLANCE		FREQUENCY
SR .2.1	Verify dissolved boron concentration limit in spent fuel pool water and water to be added to the DSC cavity is met using two independent measurements (two samples analyzed by different individuals) for LOADING OPERATIONS.	Within 4 hours before insertion of the first fuel assembly into the DSC AND Every 48 hours thereafter while the DSC is in the spent fuel pool or until the fuel has been removed from the DSC.
SR .2.2	Verify dissolved boron concentration limit in spent fuel pool water and water to be added to the DSC cavity is met using two independent measurements (two samples analyzed by different individuals) for UNLOADING OPERATIONS.	Once within 4 hours prior to flooding DSC during UNLOADING OPERATIONS AND Every 48 hours thereafter while the DSC is in the spent fuel pool or until the fuel has been removed from the DSC.

4.0 DESIGN FEATURES

The specifications in this section include the design characteristics of special importance to each of the physical barriers and to maintenance of safety margins in the Standardized NUHOMS® System design. The principal objective of this section is to describe the design envelope that may constrain any physical changes to essential equipment. Included in this section are the site environmental parameters that provide the bases for design, but are not inherently suited for description as LCOs.

(continued)

4.1 Canister Criticality Control

The Standardized NUHOMS® DSC models listed below are designed to take credit of the boron content in the neutron absorber plates provided in the DSC basket and/or soluble boron in the spent fuel pool per LCO 3.2. The DSCs have multiple basket configurations, based on the absorber material type (Borated Aluminum alloy, Metal Matrix Composite or Boral®), number of Poison Rod Assemblies or PRAs (for 32PT DSC only) and boron content in the absorber plates, as listed below.

DSC Model	Basket Type	Minimum B10 Areal Density for Poison Plates
61BT	A,B or C	Per Table 1-1k
32PT	A, B, C or D	Per Table 1-1h
24PTH(1)	1A, 1B, or 1C 2A, 2B or 2C	Per Table 1-1r
61BTH(2)	A, B, C, D, E or F	Per Table 1-1v and Table 1-1w
32PTH1(3)	*1A, 1B, 1C, 1D,* or *1E* *2A, 2B, 2C, 2D,* or *2E*	Per Table 1-1ff

NOTES:

(1) Specification for the Metal Matrix Composite (MMC) for the 24PTH DSC poison plates is per Table 1-1s.

(2) For the 61BTH DSC, Borated Aluminum, MMCs, or Boral® shall be supplied in accordance with UFSAR Sections T.9.1.7.1, T.9.1.7.2, T.9.1.7.3, T.9.1.7.5, T.9.1.7.6.5 and T.9.1.7.7.3, with the minimum B10 areal density specified in Table 1-1v or Table 1-1w. These sections of the UFSAR are hereby incorporated into the NUHOMS® 1004 CoC.

(3) For the 32PTH1 DSC, Borated Aluminum, MMCs, or Boral® shall be supplied in accordance with UFSAR Sections U.9.1.7.1, U.9.1.7.2, U.9.1.7.3, U.9.1.7.5, U.9.1.7.6.5 and U.9.1.7.7.3, with the minimum B10 areal density in Table 1-1ff. These sections of the UFSAR are here by incorporated into the NUHOMS® 1004 CoC.

4.2 Codes and Standards

4.2.1 Horizontal Storage Module (HSM)

The Standardized HSM and HSM-H reinforced concrete are designed to meet the requirements of ACI 349-85 and ACI 349-97 Editions respectively.

Load combinations specified in ANSI 57.9-1984, Section 6.17.3.1 are used for combining normal operating, off-normal, and accident loads for the HSM.

If an independent spent fuel storage installation site is located in a coastal salt water marine atmosphere, then any load-bearing carbon steel DSC support structure rail components of any associated HSM shall be procured with a minimum of 0.20 percent copper content *or stainless steel material shall be used* for corrosion resistance.

4.2.2 Dry Shielded Canister (DSC)

The DSCs are designed, fabricated and inspected to the maximum practical extent in accordance with ASME Boiler and Pressure Vessel Code Section III, Division 1, Subsections NB, NF, and NG for Class 1 components and supports. The ASME code edition years and any addenda *for the various DSC types are provided in the table below. The Code alternatives are discussed in Section 4.2.4.*

DSC Type	*Applicable Code*	*Edition/Year*
24P/52B/ 24PHB	*ASME B&PV Code, Section III, Division 1, Subsections NB and NF*	*1983 Edition with Winter 1985 Addenda*
61BT	*ASME B&PV Code, Section III, Division 1, Subsections NB, NG and NF, including Code Case N-595-1*	*1998 Edition with 1999 Addenda*
32PT, 24PTH	*ASME B&PV Code, Section III, Division 1, Subsections NB, NG and NF, including Code Case N-595-2*	*1998 Edition with Addenda through 2000*
61BTH, 32PTH1	*ASME B&PV Code, Section III, Division 1, Subsections NB, NG and NF*	*1998 Edition with Addenda through 2000*

4.2.3 Transfer Cask (TC)

The Transfer Cask is designed, to the maximum practical extent in accordance with ASME Boiler and Pressure Vessel Code Section III, Subsection NC for Class 2 vessels.

The ASME Code edition *year* and *any* addenda *are provided in the table below.*

Transfer Cask	*Applicable Code*	*Edition/Year*
OS197/OS197H OS197FC/OS197HFC OS197L/OS197FC-B	*ASME B&PV Code, Section III, Division 1, Subsection NC*	*1983 Edition with Winter 1985 Addenda*
OS200 OS200FC	*ASME B&PV Code, Section III, Division 1, Subsection NC*	*1998 Edition with Addenda through 2000*

For the OS197L TC, the supplementary trailer shield is designed to resist the normal operating dead weight and handling loads in accordance with "Manual of Steel Construction Allowable Stress Design", 9th Edition, American Institute of Steel Construction Inc.

4.2.4 ASME Code Alternatives

ASME Code Alternatives for NUHOMS®-24P, 24PHB and 52B DSC Pressure Boundary Components

Reference ASME Code Section/Article	Code Requirement	Alternatives, Justification and Compensatory Measures
NCA	All	Not compliant with NCA. Quality Assurance is provided according to 10 CFR 72 Subpart G in lieu of NCA-4000.
NCA-1140	Use of Code editions and addenda	Code edition and addenda other than those specified in Section 4.2.2 may be used for construction, but in no case earlier than 3 years before that specified in the Table. Materials produced and certified in accordance with ASME Section II material specification from Code Editions and Addenda other than those specified in Section 4.2.2 may be used, so long the materials meet all the requirements of Article 2000 of the applicable Subsection of the Section III Edition and Addenda used for construction.
NB-1100	Requirements for Code Stamping of Components, Code reports and certificates, etc.	Code Stamping is not required. As Code Stamping is not required, the fabricator is not required to hold an ASME "N" or "NPT" stamp, or to be ASME Certified.
NB-1132	Attachments with a pressure retaining function, including stiffeners, shall be considered part of the component.	Bottom shield plug and outer bottom cover plate are outside code jurisdiction; these components together are much larger than required to provide stiffening for the inner bottom cover plate; the weld that retains the outer bottom cover plate and with it the bottom shield plug is subject to root and final PT examination.
NB-2130 NB-4121	Material must be supplied by ASME approved material suppliers. Material Certification by Certificate Holder	Material is certified to meet all ASME Code criteria but is not eligible for certification or Code Stamping if a non-ASME fabricator is used. As the fabricator is not required to be ASME certified, material certification to NB-2130 is not possible. Material traceability and certification are maintained in accordance with TN's NRC approved QA program.
NB-4240 NB-5230	Full penetration welds are required for pressure boundary closure joints Weld examination shall be UT or RT with surface PT	<u>DSC Pressure Boundary Welds:</u> The joint details at the top and bottom end of the DSCs are not full penetration welds and thus do not comply with the requirements of figure NB-4243-1 for Category C flat head closure pressure and containment boundary welds. Volumetric weld inspection (RT or UT) is not practical due to the DSC geometry at the top and bottom closures and due to high radiation at the top closure after fuel loading (ALARA consideration). The inner and outer cover plate closure welds provide redundant closure welds, which are required by the 10CFR72 license. These welds are partial penetration welds that have been designed using a conservative "weld efficiency" factor of 0.6. Breach of the DSC confinement barriers due to an undetected flaw in any single weld layer is implausible due to the requirement for multi-layer welds. The top and bottom outer cover plate to shell welds and the inner bottom cover plate to shell weld receive a root and final PT. The top inner cover plate to shell weld, which is leak tested, has a final PT only.

ASME Code Alternatives for NUHOMS®-24P, 24PHB and 52B DSC Pressure Boundary Components (continued)

Reference ASME Code Section/Article	***Code Requirement***	***Alternatives, Justification and Compensatory Measures***
NB-6111	*All completed pressure retaining systems shall be pressure tested*	*The pressure retaining system of the DSC consists of the following components: shell, bottom inner cover plate, siphon and vent block siphon and vent port covers, and top inner cover plates. The bottom cover plates are welded to the shell at the fabricator shop, whereas the top cover plates are field-welded to the shell at the nuclear power plant, following the loading of irradiated nuclear fuel. All other welds made to the pressure boundary, such as the support ring to shell weld, are not part of the pressure boundary and, thus, are not pressure tested.* *DSC Shell and Bottom Cover Plate Welds:* *The DSC Shell and inner bottom cover plate are pressure tested during fabrication to the requirements of NB-6000. A helium leak test is performed to demonstrate leakage integrity of this boundary. Since the outer bottom cover plate is installed after the inner bottom cover plate is installed, it cannot be pressure tested.* *DSC Top Cover Plates Closure Welds:* *The top closure welds are not completed until the DSC is loaded with irradiated nuclear fuel; therefore, a pressure test is not performed. Multi-layer welds are used for these joints to eliminate potential leakage paths. The inner and outer top closure welds are tested as follows:* *Inner Top Confinement Boundary Welds:* *The inner top confinement boundary welds include the following: (1) field weld of inner cover plate to shell weld (including inner top cover plate to vent and siphon block), (2) top of siphon and vent block to shell weld, and (3) field weld of siphon and vent port cover plates to vent and siphon block ports. Weld (1) is helium leak tested in the field. Weld (2) is made in the fabricator shop under controlled conditions and receives a final PT. A pressure test and helium leak test are not practical because of its location. A field leak test of weld (2) is not performed because the current 10CFR72 license does not require it. Weld (3) is performed in the field with a final PT and without a leak test. A helium leak test cannot be performed on these welds because the vent and siphon ports are covered by the plates. Pressurization would require cutting a hole in the DSC creating a potential leakage point for the long-term storage canister.* *Outer Top Cover Plate Weld:* *The outer top cover plate to shell weld receives a root and final PT. It is not leak tested because it is installed following the inner top cover plate.*

ASME Code Alternatives for NUHOMS®-24P, 24PHB and 52B DSC Pressure Boundary Components

(continued)

Reference ASME Code Section/Article	***Code Requirement***	***Alternatives, Justification and Compensatory Measures***
NB-7000	*Overpressure Protection*	*No overpressure protection is provided for the NUHOMS® DSCs. The function of the DSC is to contain radioactive materials under normal, off-normal and hypothetical accident conditions postulated to occur during transportation and storage. The DSC is designed to withstand the maximum possible internal pressure considering 100% fuel rod failure at maximum accident temperature.*
NB -8000	*Requirements for nameplates, stamping & reports per NCA-8000*	*The NUHOMS® DSC nameplate provides the information required by 10CFR71, 49CFR173 and 10CFR72 as appropriate. Code stamping is not required for the DSC. QA data packages are prepared in accordance with the requirements of TN's approved QA program.*

ASME Code Alternatives for NUHOMS®-24P, 24PHB, and 52B DSC Basket Assembly

Reference ASME Code Section/Article	***Code Requirement***	***Alternatives, Justification and Compensatory Measures***
NCA	*All*	*Not compliant with NCA. Quality Assurance is provided according to 10 CFR 72 Subpart G in lieu of NCA-4000.*
NCA-1140	*Use of Code editions and addenda*	*Code edition and addenda other than those specified in Section 4.2.2 may be used for construction, but in no case earlier than 3 years before that specified in the Table.* *Materials produced and certified in accordance with ASME Section II material specification from Code Editions and Addenda other than those specified in Section 4.2.2 may be used, so long the materials meet all the requirements of Article 2000 of the applicable Subsection of the Section III Edition and Addenda used for construction.*
NF-2130	*Material must be supplied by ASME approved material suppliers*	*All DSC Basket Assembly sub-components designated as ASME on the DSC drawings are obtained from TN approved suppliers with Certified Material Test Reports (CMTR's). The DSC basket subcomponents listed below have been designated as non-Code.* • *Guide Sleeves, Oversleeves, and extraction stops (PWR only)* • *Neutron Absorber Plates and misc. hardware, such as anti-rotation pin, screws and locknuts, (BWR Only)* • *Coating for Spacer Discs*
NF-4121	*Material Certification by Certificate Holder*	*Material traceability and certification are maintained in accordance with TN's NRC approved QA program*
NF -8000	*Requirements for nameplates, stamping & reports per NCA-8000*	*The NUHOMS® DSC nameplate provides the information required by 10CFR71, 49CFR173 and 10CFR72 as appropriate. Code stamping is not required for the DSC. QA data packages are prepared in accordance with the requirements of TN's approved QA program.*
NF-5000	*NDE Personnel must be qualified to edition of SNT-TC-1A*	*Permit use of more recent edition of SNT-TC-1A.*

ASME Code Alternatives for the NUHOMS®-61BT DSC Confinement Boundary

Reference ASME Code Section/Article	*Code Requirement*	*Alternatives, Justification & Compensatory Measures*
NCA	*All*	*Not compliant with NCA. Quality Assurance is provided according to 10 CFR 72 Subpart G in lieu of NCA-4000.*
NCA-1140	*Use of Code editions and addenda*	*Code edition and addenda other than those specified in Section 4.2.2 may be used for construction, but in no case earlier than 3 years before that specified in the Table.* *Materials produced and certified in accordance with ASME Section II material specification from Code Editions and Addenda other than those specified in Section 4.2.2 may be used, so long the materials meet all the requirements of Article 2000 of the applicable Subsection of the Section III Edition and Addenda used for construction.*
NB-1100	*Requirements for Code Stamping of Components, Code reports and certificates, etc.*	*Code Stamping is not required. As Code Stamping is not required, the fabricator is not required to hold an ASME "N" or "NPT" stamp, or to be ASME Certified.*
NB-1132	*Attachments with a pressure retaining function, including stiffeners, shall be considered part of the component.*	*Bottom shield plug and outer bottom cover plate are outside code jurisdiction; these components together are much larger than required to provide stiffening for the inner bottom cover plate; the weld that retains the outer bottom cover plate and with it the bottom shield plug is subject to root and final PT examination.*
NB-2130	*Material must be supplied by ASME approved material suppliers.*	*Material is certified to meet all ASME Code criteria but is not eligible for certification or Code Stamping if a non-ASME fabricator is used. As the fabricator is not required to be ASME certified, material certification to NB-2130 is not possible. Material traceability and certification are maintained in accordance with TN's NRC approved QA program.*
NB-4121	*Material Certification by Certificate Holder*	
NB-4243 and NB-5230	*Category C weld joints in vessels and similar weld joints in other components shall be full penetration joints. These welds shall be examined by UT or RT and either PT or MT*	*The joints between the top outer and inner cover plates and containment shell are designed and fabricated per ASME Code Case N-595-1. This includes the inner top cover plate weld around the vent and siphon block. The welds are partial penetration welds and the root and final layer are PT examined. The weld between the vent and siphon block and the shell is made at the fabricator's shop and receives a final PT examination.*
NB-6100 and 6200	*All completed pressure retaining systems shall be pressure tested*	*The vent and siphon block is not pressure tested due to the manufacturing sequence. The siphon block weld is helium leak tested when fuel is loaded and then covered with the outer top closure plate.*
NB-7000	*Overpressure Protection*	*No overpressure protection is provided for the NUHOMS® DSCs. The function of the DSC is to contain radioactive materials under normal, off-normal and hypothetical accident conditions postulated to occur during transportation and storage. The DSC is designed to withstand the maximum possible internal pressure considering 100% fuel rod failure at maximum accident temperature.*

ASME Code Alternatives for the NUHOMS®-61BT DSC Confinement Boundary
(Concluded)

Reference ASME Code Section/Article	***Code Requirement***	***Alternatives, Justification & Compensatory Measures***
NB -8000	*Requirements for nameplates, stamping & reports per NCA-8000*	*The NUHOMS® DSC nameplate provides the information required by 10CFR71, 49CFR173 and 10CFR72 as appropriate. Code stamping is not required for the DSC. QA data packages are prepared in accordance with the requirements of TN's approved QA program.*
NB-5000	*NDE Personnel must be qualified to edition of SNT-TC-1A*	*Permit use of more recent edition of SNT-TC-1A.*

ASME Code Alternatives for the NUHOMS®-61BT DSC Basket

Reference ASME Code Section/Article	*Code Requirement*	*Alternatives, Justification & Compensatory Measures*
NCA	*All*	*Not compliant with NCA. Quality Assurance is provided according to 10 CFR 72 Subpart G in lieu of NCA-4000.*
NCA-1140	*Use of Code editions and addenda*	*Code edition and addenda other than those specified in Section 4.2.2 may be used for construction, but in no case earlier than 3 years before that specified in the Table.* *Materials produced and certified in accordance with ASME Section II material specification from Code Editions and Addenda other than those specified in Section 4.2.2 may be used, so long the materials meet all the requirements of Article 2000 of the applicable Subsection of the Section III Edition and Addenda used for construction.*
NG-1100	*Requirements for Code Stamping of Components, Code reports and certificates, etc.*	*Code Stamping is not required. As Code Stamping is not required, the fabricator is not required to hold an ASME "N" or "NPT" stamp, or to be ASME Certified.*
NG-2000	*Use of ASME Code Material*	*Some baskets include neutron absorber and aluminum plates that are not ASME Code Class 1 material. They are used for criticality safety and heat transfer, and are only credited in the structural analysis with supporting their own weight and transmitting bearing loads through their thickness.*

Alternatives to the ASME Code for the NUHOMS®-32PT DSC Confinement Boundary

Reference ASME Code Section/Article	Code Requirement	Alternatives, Justification & Compensatory Measures
NCA	All	Not compliant with NCA. Quality Assurance is provided according to 10 CFR 72 Subpart G in lieu of NCA-4000.
NCA-1140	Use of Code editions and addenda	Code edition and addenda other than those specified in Section 4.2.2 may be used for construction, but in no case earlier than 3 years before that specified in the Table. Materials produced and certified in accordance with ASME Section II material specification from Code Editions and Addenda other than those specified in Section 4.2.2 may be used, so long the materials meet all the requirements of Article 2000 of the applicable Subsection of the Section III Edition and Addenda used for construction.
NB-1100	Requirements for Code Stamping of Components, Code reports and certificates, etc.	Code Stamping is not required. As Code Stamping is not required, the fabricator is not required to hold an ASME "N" or "NPT" stamp, or to be ASME Certified.
NB-1132	Attachments with a pressure retaining function, including stiffeners, shall be considered part of the component.	Bottom shield plug and outer bottom cover plate are outside code jurisdiction; these components together are much larger than required to provide stiffening for the inner bottom cover plate; the weld that retains the outer bottom cover plate and with it the bottom shield plug is subject to root and final PT examination.
NB-2130	Material must be supplied by ASME approved material suppliers.	Material is certified to meet all ASME Code criteria but is not eligible for certification or Code Stamping if a non-ASME fabricator is used. As the fabricator is not required to be ASME certified, material certification to NB-2130 is not possible. Material traceability and certification are maintained in accordance with TN's NRC approved QA program.
NB-4121	Material Certification by Certificate Holder	
NB-4243 and NB-5230	Category C weld joints in vessels and similar weld joints in other components shall be full penetration joints. These welds shall be examined by UT or RT and either PT or MT	The joints between the top outer and inner cover plates and containment shell are designed and fabricated per ASME Code Case N-595-2, which provides alternative requirements for the design and examination of spent fuel canister closures. This includes the inner top cover plate weld around the vent & siphon block and the vent and siphon block welds to the shell. The closure welds are partial penetration welds and the root and final layer are subject to PT examination (in lieu of volumetric examination) in accordance with the provisions of ASME Code Case N-595-2. The 32PT closure system employs austenitic stainless steel shell, lid materials, and welds. Because austenitic stainless steels are not subject to brittle failure at the operating temperatures of the DSC, crack propagation is not a concern. Thus, multi-level PT examination provides reasonable assurance that flaws of interest will be identified. The PT examination is done by qualified personnel, in accordance with Section V and the acceptance standards of Section III, Subsection NB-5000. This alternative does not apply to other shell confinement welds, i.e., the longitudinal and circumferential welds applied to the DSC shell, and the inner bottom cover plate-to-shell weld which comply with NB-4243 and NB-5230.

Alternatives to the ASME Code for the NUHOMS®-32PT DSC Confinement Boundary
(Concluded)

Reference ASME Code Section/Article	***Code Requirement***	***Alternatives, Justification & Compensatory Measures***
NB-6100 and 6200	*All pressure retaining components and completed systems shall be pressure tested. The preferred method shall be hydrostatic test.*	*The NUHOMS®-32PT DSC is pressure tested in accordance with ASME Code Case N-595-2. The shield plug support ring and the vent and siphon block are not pressure tested due to the manufacturing sequence. The support ring is not a pressure-retaining item and the vent and siphon block weld is helium leak tested after fuel is loaded to the same criteria as the inner top closure plate-to-shell weld (ANSI N14.5-1997 leaktight criteria).*
NB-7000	*Overpressure Protection*	*No overpressure protection is provided for the NUHOMS® DSCs. The function of the DSC is to contain radioactive materials under normal, off-normal and hypothetical accident conditions postulated to occur during transportation and storage. The DSC is designed to withstand the maximum possible internal pressure considering 100% fuel rod failure at maximum accident temperature.*
NB -8000	*Requirements for nameplates, stamping & reports per NCA-8000*	*The NUHOMS® DSC nameplate provides the information required by 10CFR71, 49CFR173 and 10CFR72 as appropriate. Code stamping is not required for the DSC. QA data packages are prepared in accordance with the requirements of TN's approved QA program.*
NB-5000	*NDE Personnel must be qualified to edition of SNT-TC-1A*	*Permit use of more recent edition of SNT-TC-1A.*

Alternatives to the ASME Code Exceptions for the NUHOMS®-32PT DSC Basket Assembly

Reference ASME Code Section/Article	Code Requirement	Alternatives, Justification & Compensatory Measures
NCA	All	Not compliant with NCA. Quality Assurance is provided according to 10 CFR 72 Subpart G in lieu of NCA-4000.
NCA-1140	Use of Code editions and addenda	Code edition and addenda other than those specified in Section 4.2.2 may be used for construction, but in no case earlier than 3 years before that specified in the Table. Materials produced and certified in accordance with ASME Section II material specification from Code Editions and Addenda other than those specified in Section 4.2.2 may be used, so long the materials meet all the requirements of Article 2000 of the applicable Subsection of the Section III Edition and Addenda used for construction.
NG-1100	Requirements for Code Stamping of Components, Code reports and certificates, etc.	Code Stamping is not required. As Code Stamping is not required, the fabricator is not required to hold an ASME "N" or "NPT" stamp, or to be ASME Certified.
NG-2000	Use of ASME Material	Some baskets include neutron absorber and aluminum plates that are not ASME Code Class 1 material. They are used for criticality safety and heat transfer, and are only credited in the structural analysis with supporting their own weight and transmitting bearing loads through their thickness. Material properties in the ASME Code for Type 6061 aluminum are limited to 400°F to preclude the potential for annealing out the hardening properties. Annealed properties (as published by the Aluminum Association and the American Society of Metals) are conservatively assumed for the solid aluminum rails for use above the Code temperature limits.
NG-2130	Material must be supplied by ASME approved material suppliers.	Material is certified to meet all ASME Code criteria but is not eligible for certification or Code Stamping if a non-ASME fabricator is used. As the fabricator is not required to be ASME certified, material certification to NB-2130 is not possible. Material traceability and certification are maintained in accordance with TN's NRC approved QA program.
NG-4121	Material Certification by Certificate Holder	
NG -8000	Requirements for nameplates, stamping & reports per NCA-8000	The NUHOMS® DSC nameplate provides the information required by 10CFR71, 49CFR173 and 10CFR72 as appropriate. Code stamping is not required for the DSC. QA data packages are prepared in accordance with the requirements of TN's approved QA program.
NG-3000/ Section II, Part D, Table 2A	Maximum temperature limit for XM-19 plate material is 800°F	Not compliant with ASME Section II Part D Table 2A material temperature limit for XM-19 steel for the postulated transfer accident case (117°F, loss of sunshade, loss of neutron shield). This is a post-drop accident scenario, where the calculated maximum steady state temperature is 852°F, the expected reduction in material strength is small (less than 1 ksi by extrapolation), and the only primary stresses in the basket grid are deadweight stresses. The recovery actions following the postulated drop accident are as described in Section 8.2.5 of the FSAR.

Alternatives to the ASME Code for the NUHOMS®-24PTH DSC Confinement Boundary

Reference ASME Code Section/Article	*Code Requirement*	*Alternatives, Justification & Compensatory Measures*
NCA	*All*	*Not compliant with NCA. Quality Assurance is provided according to 10 CFR 72 Subpart G in lieu of NCA-4000.*
NCA-1140	*Use of Code editions and addenda*	*Code edition and addenda other than those specified in Section 4.2.2 may be used for construction, but in no case earlier than 3 years before that specified in the Table.* *Materials produced and certified in accordance with ASME Section II material specification from Code Editions and Addenda other than those specified in Section 4.2.2 may be used, so long the materials meet all the requirements of Article 2000 of the applicable Subsection of the Section III Edition and Addenda used for construction.*
NB-1100	*Requirements for Code Stamping of Components, Code reports and certificates, etc.*	*Code Stamping is not required. As Code Stamping is not required, the fabricator is not required to hold an ASME "N" or "NPT" stamp, or to be ASME Certified.*
NB-1132	*Attachments with a pressure retaining function, including stiffeners, shall be considered part of the component.*	*Bottom shield plug assembly, outer bottom cover plate, lifting posts, grapple ring, grapple ring support are outside code jurisdiction; these components together are much larger than required to provide stiffening for the inner bottom cover plate; the weld that retains the outer bottom cover plate and with it the bottom shield plug is subject to root and final PT examination.*
NB-2130	*Material must be supplied by ASME approved material suppliers.*	*Material is certified to meet all ASME Code criteria but is not eligible for certification or Code Stamping if a non-ASME fabricator is used. As the fabricator is not required to be ASME certified, material certification to NB-2130 is not possible. Material traceability and certification are maintained in accordance with TN's NRC approved QA program.*
NB-4121	*Material Certification by Certificate Holder*	
NB-4243 and NB-5230	*Category C weld joints in vessels and similar weld joints in other components shall be full penetration joints. These welds shall be examined by UT or RT and either PT or MT*	*The joints between the top outer and inner cover plates (or top forging assembly for the 24PTH-S-LC) and containment shell are designed and fabricated per ASME Code Case N-595-2, which provides alternative requirements for the design and examination of spent fuel canister closures. This includes the inner top cover plate weld around the vent & siphon block and the vent and siphon block welds to the shell. The closure welds are partial penetration welds and the root and final layer are subject to PT examination (in lieu of volumetric examination) in accordance with the provisions of ASME Code Case N-595-2.* *The 24PTH closure system employs austenitic stainless steel shell, lid materials, and welds. Because austenitic stainless steels are not subject to brittle failure at the operating temperatures of the DSC, crack propagation is not a concern. Thus, multi-level PT examination provides reasonable assurance that flaws of interest will be identified. The PT examination is done by qualified personnel, in accordance with Section V and the acceptance standards of Section III, Subsection NB-5000. This alternative does not apply to other shell confinement welds, i.e., the longitudinal and circumferential welds of the DSC shell, and the inner bottom cover plate-to-shell weld (or bottom forging to shell weld, as applicable) which comply with NB-4243 and NB-5230.*

Alternatives to the ASME Code for the NUHOMS®-24PTH DSC Confinement Boundary
(Concluded)

Reference ASME Code Section/Article	***Code Requirement***	***Alternatives, Justification & Compensatory Measures***
NB-6100 and 6200	*All pressure retaining components and completed systems shall be pressure tested. The preferred method shall be hydrostatic test.*	*The NUHOMS®-24PTH DSC is pressure tested in accordance with ASME Code Case N-595-2. The shield plug support ring and the vent and siphon block are not pressure tested due to the manufacturing sequence. The support ring is not a pressure-retaining item and the vent and siphon block weld is helium leak tested after fuel is loaded to the same criteria as the inner top closure plate-to-shell weld (ANSI N14.5-1997 leaktight criteria).*
NB-7000	*Overpressure Protection*	*No overpressure protection is provided for the NUHOMS® DSCs. The function of the DSC is to contain radioactive materials under normal, off-normal and hypothetical accident conditions postulated to occur during transportation and storage. The DSC is designed to withstand the maximum possible internal pressure considering 100% fuel rod failure at maximum accident temperature.*
NB -8000	*Requirements for nameplates, stamping & reports per NCA-8000*	*The NUHOMS® DSC nameplate provides the information required by 10CFR71, 49CFR173 and 10CFR72 as appropriate. Code stamping is not required for the DSC. QA data packages are prepared in accordance with the requirements of TN's approved QA program.*
NB-5000	*NDE Personnel must be qualified to edition of SNT-TC-1A*	*Permit use of more recent edition of SNT-TC-1A.*

Alternatives to the ASME Code for the NUHOMS®-24PTH DSC Basket Assembly

Reference ASME Code Section/Article	Code Requirement	Alternatives, Justification & Compensatory Measures
NCA	All	Not compliant with NCA. Quality Assurance is provided according to 10 CFR 72 Subpart G in lieu of NCA-4000.
NCA-1140	Use of Code editions and addenda	Code edition and addenda other than those specified in Section 4.2.2 may be used for construction, but in no case earlier than 3 years before that specified in the Table. Materials produced and certified in accordance with ASME Section II material specification from Code Editions and Addenda other than those specified in Section 4.2.2 may be used, so long the materials meet all the requirements of Article 2000 of the applicable Subsection of the Section III Edition and Addenda used for construction.
NG-1100	Requirements for Code Stamping of Components, Code reports and certificates, etc.	Code Stamping is not required. As Code Stamping is not required, the fabricator is not required to hold an ASME "N" or "NPT" stamp, or to be ASME Certified.
NG-2000	Use of ASME Material	Some baskets include neutron absorber and aluminum plates that are not ASME Code Class 1 material. They are used for criticality safety and heat transfer, and are only credited in the structural analysis with supporting their own weight and transmitting bearing loads through their thickness. Material properties in the ASME Code for Type 6061 aluminum are limited to 400°F to preclude the potential for annealing out the hardening properties. Annealed properties (as published by the Aluminum Association and the American Society of Metals) are conservatively assumed for the aluminum transition rails for use above the Code temperature limits.
NG-2130	Material must be supplied by ASME approved material suppliers.	Material is certified to meet all ASME Code criteria but is not eligible for certification or Code Stamping if a non-ASME fabricator is used. As the fabricator is not required to be ASME certified, material certification to NB-2130 is not possible. Material traceability and certification are maintained in accordance with TN's NRC approved QA program.
NG-4121	Material Certification by Certificate Holder	
NG -8000	Requirements for nameplates, stamping & reports per NCA-8000	The NUHOMS® DSC nameplate provides the information required by 10CFR71, 49CFR173 and 10CFR72 as appropriate. Code stamping is not required for the DSC. QA data packages are prepared in accordance with the requirements of TN's approved QA program.
NG-3000/ Section II, Part D, Table 2A	Maximum temperature limit for Type 304 plate material is 800°F	Not compliant with ASME Section II Part D Table 2A material temperature limit for Type 304 steel for the postulated transfer accident case (117°F, loss of sunshade, loss of neutron shield). This is a post-drop accident scenario, where the calculated maximum steady state temperature is 862°F, the expected reduction in material strength is small (less than 1 ksi by extrapolation), and the only primary stresses in the basket grid are deadweight stresses. The recovery actions following the postulated drop accident are as described in Section 8.2.5 of the FSAR.

Alternatives to the ASME Code for the NUHOMS®-24PTH DSC Basket Assembly
(Concluded)

Reference ASME Code Section/Article	***Code Requirement***	***Alternatives, Justification & Compensatory Measures***
NG-3352	*Table NG 3352-1 lists the permissible welded joints*	*The fusion (spot) type welds between the stainless steel insert plates (straps) and the stainless steel fuel compartment tube are not permissible welds per Table NG-3352-1. These welds are qualified by testing. The required minimum tested capacity of the welded connection (at each side of the tube) shall be 36 Kips (at room temperature). This value is based on a margin of safety (test-to-design) of 1.6, which is larger than the Code-implied margin of safety for Level D loads. The minimum capacity shall be determined by shear tests of individual specimens made from production material. The tests shall be corrected for temperature differences (test-to-design) and for material properties (actual-to-ASME Code minimum values) to demonstrate that the capacity of the welded connection with ASME minimum properties, tested at design temperatures, will meet the 36 Kips test requirement. The capacity of the welded connection is determined from the test of the weld pattern of a typical insert plate to the tube connection. A joint efficiency (quality) factor of 1.0 is utilized for the fuel compartment longitudinal seam welds. Table NG-3352-1 permits a joint efficiency (quality) factor of 0.5 to be used for full penetration weld examined by ASME Section V visual examination (VT). For the 24PTH DSC ,the compartment seam weld is thin and the weld will be made in one pass. Both surfaces of weld (inside and outside) will be fully examined by VT and therefore a factor of 2 x 0.5=1.0, will be used in the analysis. This is justified as both surfaces of the single weld pass/layer will be fully examined, and the stainless steel material that comprises the fuel compartment tubes is very ductile.*

Alternatives to the ASME Code for the NUHOMS® 32PTH1 DSC Confinement Boundary

Reference ASME Code Section/Article	*Code Requirement*	*Alternatives, Justification & Compensatory Measures*
NCA	*All*	*Not compliant with NCA. Quality Assurance is provided according to 10 CFR 72 Subpart G in lieu of NCA-4000.*
NCA-1140	*Use of Code editions and addenda*	*Code edition and addenda other than those specified in Section 4.2.2 may be used for construction, but in no case earlier than 3 years before that specified in the Table.* *Materials produced and certified in accordance with ASME Section II material specification from Code Editions and Addenda other than those specified in Section 4.2.2 may be used, so long the materials meet all the requirements of Article 2000 of the applicable Subsection of the Section III Edition and Addenda used for construction.*
NB-1100	*Requirements for Code Stamping of Components, Code reports and certificates, etc.*	*Code Stamping is not required. As Code Stamping is not required, the fabricator is not required to hold an ASME "N" or "NPT" stamp, or to be ASME Certified.*
NB-2130	*Material must be supplied by ASME approved material suppliers.*	*Material is certified to meet all ASME Code criteria but is not eligible for certification or Code Stamping if a non-ASME fabricator is used. As the fabricator is not required to be ASME certified, material certification to NB-2130 is not possible. Material traceability and certification are maintained in accordance with TN's NRC approved QA program.*
NB-4121	*Material Certification by Certificate Holder*	
NB-4243 and NB-5230	*Category C weld joints in vessels and similar weld joints in other components shall be full penetration joints. These welds shall be examined by UT or RT and either PT or MT*	*The shell to the outer top cover weld, the shell to the inner top cover/shield plug weld (including optional design configurations for the inner top cover as described in the 32PTH1 DSC drawings), the siphon/vent cover welds, and the vent and siphon block welds to the shell are all partial penetration welds. As an alternative to the NDE requirements of NB-5230, for Category C welds, all of these closure welds are multi-layer welds and receive a root and final PT examination, except for the shell to the outer top cover weld. The shell to the outer top cover weld will be a multi-layer weld and receive multi-level PT examination in accordance with the guidance provided in ISG-15 for NDE. The multi-level PT examination provides reasonable assurance that flaws of interest will be identified. The PT examination is done by qualified personnel, in accordance with Section V and the acceptance standards of Section III, Subsection NB-5000. All of these welds are designed to meet the guidance provided in ISG-15 for stress reduction factor.*
NB-1132	*Attachments with a pressure retaining function, including stiffeners, shall be considered part of the component.*	*Bottom shield plug and outer bottom cover plate are outside code jurisdiction; these components together are much larger than required to provide stiffening for the inner bottom cover plate; the weld that retains the outer bottom cover plate and with it the bottom shield plug is subject to root and final PT examination.*

Alternatives to the ASME Code for the NUHOMS® 32PTH1 DSC Confinement Boundary (Concluded)

Reference ASME Code Section/Article	*Code Requirement*	*Alternatives, Justification & Compensatory Measures*
NB-6100 and 6200	*All pressure retaining components and completed systems shall be pressure tested. The preferred method shall be hydrostatic test.*	*The NUHOMS® 32PTH1 DSC is not a complete vessel until the top closure is welded following placement of fuel assemblies within the DSC. Due to the inaccessibility of the shell and lower end closure welds following fuel loading and top closure welding, as an alternative, the pressure testing of the DSC is performed in two parts. The DSC shell and inner bottom plate/forging (including all longitudinal and circumferential welds), are pressure tested and examined at the fabrication facility.* *The shell to the inner top cover/shield plug closure weld (including optional design configurations for the inner top cover as described in the 32PTH1 DSC drawings) is pressure tested and examined for leakage in accordance with NB-6300 in the field.* *The siphon/vent cover welds are not pressure tested; these welds and the shell to the inner top cover/shield plug closure weld (including Optional design configurations for the inner top cover as described in the 32PTH1 DSC drawings) are helium leak tested after the pressure test.* *Per NB-6324 the examination for leakage shall be done at a pressure equal to the greater of the design pressure or three-fourths of the test pressure. As an alternative, if the examination for leakage of these field welds, following the pressure test, is performed using helium leak detection techniques, the examination pressure may be reduced to ≥1.5 psig. This is acceptable given the significantly greater sensitivity of the helium leak detection method.*
NB-7000	*Overpressure Protection*	*No overpressure protection is provided for the NUHOMS® DSCs. The function of the DSC is to contain radioactive materials under normal, off-normal and hypothetical accident conditions postulated to occur during transportation and storage. The DSC is designed to withstand the maximum possible internal pressure considering 100% fuel rod failure at maximum accident temperature.*
NB-8000	*Requirements for nameplates, stamping & reports per NCA-8000*	*The NUHOMS® DSC nameplate provides the information required by 10CFR71, 49CFR173 and 10CFR72 as appropriate. Code stamping is not required for the DSC. QA data packages are prepared in accordance with the requirements of TN's approved QA program.*
NB-5000	*NDE Personnel must be qualified to edition of SNT-TC-1A*	*Permit use of more recent edition of SNT-TC-1A.*

Alternatives to the ASME Code for the NUHOMS® 32PTH1 DSC Basket Assembly

Reference ASME Code Section/Article	*Code Requirement*	*Alternatives, Justification & Compensatory Measures*
NCA	*All*	*Not compliant with NCA. Quality Assurance is provided according to 10 CFR 72 Subpart G in lieu of NCA-4000.*
NCA-1140	*Use of Code editions and addenda*	*Code edition and addenda other than those specified in Section 4.2.2 may be used for construction, but in no case earlier than 3 years before that specified in the Table.* *Materials produced and certified in accordance with ASME Section II material specification from Code Editions and Addenda other than those specified in Section 4.2.2 may be used, so long the materials meet all the requirements of Article 2000 of the applicable Subsection of the Section III Edition and Addenda used for construction.*
NG/NF-1100	*Requirements for Code Stamping of Components, Code reports and certificates, etc.*	*Code Stamping is not required. As Code Stamping is not required, the fabricator is not required to hold an ASME "N" or "NPT" stamp, or to be ASME Certified.*
NG-2000	*Use of ASME Material*	*Some baskets include neutron absorber and aluminum plates that are not ASME Code Class 1 material. They are used for criticality safety and heat transfer, and are only credited in the structural analysis with supporting their own weight and transmitting bearing loads through their thickness. Material properties in the ASME Code for Type 6061 aluminum are limited to 400°F to preclude the potential for annealing out the hardening properties. Annealed properties (as published by the Aluminum Association and the American Society of Metals) are conservatively assumed for the aluminum transition rails for use above the Code temperature limits.*
NG/NF-2130 *NG/NF-4121*	*Material must be supplied by ASME approved material suppliers.* *Material Certification by Certificate Holder*	*Material is certified to meet all ASME Code criteria but is not eligible for certification or Code Stamping if a non-ASME fabricator is used. As the fabricator is not required to be ASME certified, material certification to NB-2130 is not possible. Material traceability and certification are maintained in accordance with TN's NRC approved QA program.*
NG-8000	*Requirements for nameplates, stamping & reports per NCA-8000*	*The NUHOMS® DSC nameplate provides the information required by 10CFR71, 49CFR173 and 10CFR72 as appropriate. Code stamping is not required for the DSC. QA data packages are prepared in accordance with the requirements of TN's approved QA program.*
NG-3000/ Section II, Part D, Table 2A	*Maximum temperature limit for Type 304 plate material is 800°F.*	*Not compliant with ASME Section II Part D Table 2A material temperature limit for Type 304 steel for the postulated transfer accident case (117°F, loss of sunshade, loss of neutron shield) and blocked vent accident (117°F, 40 hr). The calculated maximum steady state temperatures for transfer accident case and blocked vent accident case are less than 1000°F. The only primary stresses in the basket grid are deadweight stresses. The ASME Code allows use of SA240 Type 304 stainless steel to temperatures up to 1000°F, as shown in ASME Code, Section II, Part D, Table 1A. In the temperature range of interest (near 800°F), the S_m values for SA240 Type 304 shown in ASME Code, Section II Part D, Table 2A are identical to the allowable S values for the same material shown in Section B, Part D, Table 1A. The recovery actions following these accident scenarios are as described in the UFSAR.*

Alternatives to the ASME Code for the NUHOMS® 32PTH1 DSC Basket Assembly (Concluded)

Reference ASME Code Section/Article	*Code Requirement*	*Alternatives, Justification & Compensatory Measures*
NG-3352	*Table NG 3352-1 lists the permissible welded joints.*	*The fusion welds between the stainless steel insert plates and the stainless fuel compartment tube are not included in Table NG-3352-1. These welds are qualified by testing. The required minimum tested capacity of the welded connection (at each side of the tube) shall be 45 kips (at room temperature). The capacity shall be demonstrated by qualification and production testing. Testing shall be performed using, or corrected to, the lowest tensile strength of material used in the basket assembly or to minimum specified tensile strength. Testing may be performed on individual welds, or on weld patterns representative of one wall of the tube.* *ASME Code Section IX does not provide tests for qualification of these type of welds. Therefore, these welds are qualified using Section IX to the degree applicable together with the testing described here.* *The welds will be visually inspected to confirm that they are located over the insert plates, in lieu of the visual acceptance criteria of NG-5260 which are not appropriate for this type of weld.*
		A joint efficiency (quality) factor of 1.0 is utilized for the fuel compartment longitudinal seam welds. Table NG-3352-1 permits a joint efficiency (quality) factor of 0.5 to be used for full penetration weld examined by ASME Section V visual examination (VT). For the 32PTH1 DSC, the compartment seam weld is thin and the weld will be made in one pass. Both surfaces of weld (inside and outside) will be fully examined by VT and therefore a factor of 2 x 0.5=1.0, will be used in the analysis. This is justified as both surfaces of the single weld pass/layer will be fully examined, and the stainless steel material that comprises the fuel compartment tubes is very ductile.

ASME Code Alternatives for the NUHOMS®-61BTH DSC Confinement Boundary

Reference ASME Code Section/Article	*Code Requirement*	*Alternatives, Justification & Compensatory Measures*
NCA	*All*	*Not compliant with NCA. Quality Assurance is provided according to 10 CFR 72 Subpart G in lieu of NCA-4000.*
NCA-1140	*Use of Code editions and addenda*	*Code edition and addenda other than those specified in Section 4.2.2 may be used for construction, but in no case earlier than 3 years before that specified in the Table.* *Materials produced and certified in accordance with ASME Section II material specification from Code Editions and Addenda other than those specified in Section 4.2.2 may be used, so long the materials meet all the requirements of Article 2000 of the applicable Subsection of the Section III Edition and Addenda used for construction.*
NB-1100	*Requirements for Code Stamping of Components, Code reports and certificates, etc.*	*Code Stamping is not required. As Code Stamping is not required, the fabricator is not required to hold an ASME "N" or "NPT" stamp, or to be ASME Certified.*
NB-1132	*Attachments with a pressure retaining function, including stiffeners, shall be considered part of the component.*	*Bottom shield plug and outer bottom cover plate are outside code jurisdiction; these components together are much larger than required to provide stiffening for the inner bottom cover plate; the weld that retains the outer bottom cover plate and with it the bottom shield plug is subject to root and final PT examination.*
NB-2130	*Material must be supplied by ASME approved material suppliers.*	*Material is certified to meet all ASME Code criteria but is not eligible for certification or Code Stamping if a non-ASME fabricator is used. As the fabricator is not required to be ASME certified, material certification to NB-2130 is not possible. Material traceability and certification are maintained in accordance with TN's NRC approved QA program.*
NB-4121	*Material Certification by Certificate Holder*	
NB-4243 and NB-5230	*Category C weld joints in vessels and similar weld joints in other components shall be full penetration joints. These welds shall be examined by UT or RT and either PT or MT.*	*The shell to the outer top cover weld, the shell to the inner top cover/weld, the siphon/vent cover welds and the vent and siphon block welds to the shell are all partial penetration welds.* *As an alternative to the NDE requirements of NB-5230 for Category C welds, all of these closure welds will be multi-layer welds and receive a root and final PT examination, except for the shell to the outer top cover weld. The shell to the outer top cover weld will be a multi-layer weld and receive multi-level PT examination in accordance with the guidance provided in ISG-15 for NDE. The multi-level PT Examination provides reasonable assurance that flaws of interest will be identified. The PT examination is done by qualified personnel, in accordance with Section V and the acceptance standards of Section III, Subsection NB-5000. All of these welds will be designed to meet the guidance provided in ISG-15 for stress reduction factor.*

ASME Code Alternatives for the NUHOMS®-61BTH DSC Confinement Boundary
(Concluded)

Reference ASME Code Section/Article	***Code Requirement***	***Alternatives, Justification & Compensatory Measures***
NB-6100 and 6200	*All completed pressure retaining systems shall be pressure tested*	*The 61BTH is not a complete or "installed" pressure vessel until the top closure is welded following placement of Fuel Assemblies with the DSC. Due to the inaccessibility of the shell and lower end closure welds following fuel loading and top closure welding, as an alternative, the pressure testing of the DSC is performed in two parts. The DSC shell (including all longitudinal and circumferential welds) is pressure tested and examined at the fabrication facility.* *The shell to the inner top cover closure weld are pressure tested and examined for leakage in accordance with NB-6300 in the field.* *The siphon/vent cover welds are not pressure tested; these welds and the shell to the inner top cover closure weld are helium leak tested after the pressure test.* *Per NB-6324 the examination for leakage shall be done at a pressure equal to the greater of the design pressure or three-fourths of the test pressure. As an alternative, if the examination for leakage of these field welds, following the pressure test, is performed using helium leak detection techniques, the examination pressure may be reduced to ≥ 1.5 psig. This is acceptable given the significantly greater sensitivity of the helium leak detection method.*
NB-7000	*Overpressure Protection*	*No overpressure protection is provided for the NUHOMS® DSCs. The function of the DSC is to contain radioactive materials under normal, off-normal and hypothetical accident conditions postulated to occur during transportation and storage. The DSC is designed to withstand the maximum possible internal pressure considering 100% fuel rod failure at maximum accident temperature.*
NB-8000	*Requirements for nameplates, stamping & reports per NCA-8000*	*The NUHOMS® DSC nameplate provides the information required by 10CFR71, 49CFR173 and 10CFR72 as appropriate. Code stamping is not required for the DSC. QA data packages are prepared in accordance with the requirements of TN's approved QA program.*

ASME Code Alternatives for the NUHOMS®-61BTH DSC Basket

Reference ASME Code Section/Article	*Code Requirement*	*Alternatives, Justification & Compensatory Measures*
NCA	*All*	*Not compliant with NCA. Quality Assurance is provided according to 10 CFR 72 Subpart G in lieu of NCA-4000.*
NCA-1140	*Use of Code editions and addenda*	*Code edition and addenda other than those specified in Section 4.2.2 may be used for construction, but in no case earlier than 3 years before that specified in the Table.* *Materials produced and certified in accordance with ASME Section II material specification from Code Editions and Addenda other than those specified in Section 4.2.2 may be used, so long the materials meet all the requirements of Article 2000 of the applicable Subsection of the Section III Edition and Addenda used for construction.*
NG-1100	*Requirements for Code Stamping of Components, Code reports and certificates, etc.*	*Code Stamping is not required. As Code Stamping is not required, the fabricator is not required to hold an ASME "N" or "NPT" stamp, or to be ASME Certified.*
NG-2000	*Use of ASME Material*	*Some baskets include neutron absorber and aluminum plates that are not ASME Code Class 1 material. They are used for criticality safety and heat transfer, and are only credited in the structural analysis with supporting their own weight and transmitting bearing loads through their thickness. Material properties in the ASME Code for Type 6061 aluminum are limited to 400°F to preclude the potential for annealing out the hardening properties. Annealed properties (as published by the Aluminum Association and the American Society of Metals) are conservatively assumed for the aluminum transition rails for use above the Code temperature limits.*
NG/NF-2130 *NG/NF-4121*	*Material must be supplied by ASME approved material suppliers.* *Material Certification by Certificate Holder*	*Material is certified to meet all ASME Code criteria but is not eligible for certification or Code Stamping if a non-ASME fabricator is used. As the fabricator is not required to be ASME certified, material certification to NB-2130 is not possible. Material traceability and certification are maintained in accordance with TN's NRC approved QA program.*
NG-3352	*Table NG 3352-1 lists the permissible welded joints and quality factors.*	*The fuel compartment tubes may be fabricated from sheet with full penetration seam weldments. Per Table NG-3352-1 a joint efficiency (quality) factor of 0.5 is to be used for full penetration weldments examined in accordance with ASME Section V visual examination (VT). A joint efficiency (quality) factor of 1.0 is utilized for the fuel compartment longitudinal seam welds (if present) with VT examination. This is justified because the compartment seam weld is thin and the weldment is made in one pass; and both surfaces of the weldment (inside and outside) receive 100% VT examination. The 0.5 quality factor, applicable to each surface of the weldment, results is a quality factor of 1.0 since both surfaces are 100% examined. In addition,the fuel compartments have no pressure retaining function and the stainless steel material that comprises the fuel compartment tubes is very ductile.*
NG -8000	*Requirements for nameplates, stamping & reports per NCA-8000*	*The NUHOMS® DSC nameplate provides the information required by 10CFR71, 49CFR173 and 10CFR72 as appropriate. Code stamping is not required for the DSC. QA data packages are prepared in accordance with the requirements of TN's approved QA program.*

4.3 Storage Location Design Features

The following storage location design features and parameters shall be verified by the system user to assure technical agreement with the FSAR.

4.3.1 Storage Configuration

HSMs are placed together in single rows or back to back arrays. An end shield wall is placed on the outside end of any loaded outside HSM. A rear shield wall is placed on the rear of any single row loaded HSM.

A minimum of two (2) HSM-H modules are required to be placed adjacent to each other for stability during design basis flood loads.

A minimum of three (3) high seismic option HSM-H modules are to be connected with each other.

4.3.2 Concrete Storage Pad Properties to Limit DSC Gravitational Loadings Due to Postulated Drops

The TC/DSC has been evaluated for drops of up to 80 inches onto a reinforced concrete storage pad.

(continued)

4.3 Storage Location Design Features (continued)

4.3.3 Site Specific Parameters and Analyses

The potential Standardized NUHOMS® System user (general licensee) shall perform the verifications and evaluations in accordance with 10 CFR 72.212 before the use of the system under the general license. The following parameters and analyses shall be verified by the system user for applicability at their specific site. Other natural phenomena events, such as lightning (damage to electrical system, e.g., thermal performance monitoring), tsunamis, hurricanes, and seiches, are site specific and their effects are generally bounded by other events, but they should be evaluated by the user.

1. The analyzed Flood conditions of 50 ft. height of water (full submergence of the loaded HSM with DSC) and water velocity of 15 fps.

2. One-hundred year roof snow load of 110 psf.

3. The maximum yearly average temperature shall be 70°F for the 24P, 52B and 61BT DSCs only. The average daily ambient temperature shall be 100°F or less for the 52B, 61BT, 32PT, 24PHB, 24PTH, and 61BTH DSCs. For the 32PTH1 DSC, the average daily average ambient temperature shall be 106°F or less.

4. The temperature extremes either of 125°F (for the 24P, 52B and 61BT DSCs) or 117°F (for the 32PT, 24PHB, 24PTH, 61BTH and 32PTH1 DSCs). The 117°F extreme ambient temperature corresponds to a 24 hour calculated average temperature of 102°F for the 32PT DSC only. The extreme minimum ambient temperature is –40°F for storage of the DSC inside HSM.

5. The potential for fires and explosions shall be addressed, based on site-specific considerations.

6. Supplemental Shielding: In cases where supplemental shielding and engineered features (i.e., earthen berms, shield walls) are used to ensure that the requirements of 10CFR 72.104(a) are met, such features are to be considered important to safety and must be evaluated to determine the applicable Quality Assurance Category.

7. Seismic restraints shall be provided to prevent overturning of a loaded TC in a vertical orientation in the plant's FUEL BUILDING during a seismic event if a certificate holder determines that the horizontal acceleration is 0.4g or greater. The determination of the horizontal acceleration acting at the center of gravity (CG) of the loaded TC must be based on a peak horizontal ground acceleration at the site.

8. Site design spectra seismic Zero Period Acceleration (ZPA) levels of 0.25g horizontal and 0.17g vertical for the systems using the Standardized HSMs. Site design spectra seismic ZPA for systems using the HSM-H modules are payload specific as follows:

(continued)

- 0.3g horizontal and 0.2g vertical for the 24PTH and 61BTH DSCs
- 0.3g horizontal and 0.25g vertical for the 32PTH1 DSC,
- Site design spectra seismic ZPA levels for the 32PTH1 DSC systems when stored within the "high seismic option" HSM-H modules are 1.0g horizontal and 1.0g vertical.

9. The storage pad location shall have no potential for liquification at the site-specific Safe Shutdown Earthquake (SSE) level.

10. Any other site parameters or considerations that could decrease the effectiveness of cask systems important to safety.

11. The storage pad location shall be evaluated for the effects of soil structure interaction which may affect the response of the loaded HSMs.

4.4 TRANSFER CASK Design Features

The following TRANSFER CASK design features and parameters *for the OS197L TC* shall be verified by the system user to assure technical agreement with the FSAR.

4.4.1 The OS197L (Light Weight, 75 ton Version) *TC* shall not be used at the license site if the existing plant FUEL BUILDING crane is certified to 100 ton or higher.

4.4.2 *The* OS197L (Light *W*eight, 75 ton Version) *TC* temporary shielding shall be used for all LOADING OPERATIONS and TRANSFER OPERATIONS to keep the dose rates ALARA when the TC is not in the pool or suspended on the crane.

4.4.3 *The bare OS197L (Light Weight, 75 ton Version) TC shall be handled using remote operations, including the use of laser/optical targeting and camera or similar equipment for confirmation of the cask location.*

4.4.4 *The Interim Cask Cover for the OS197L TC shall not be used unless necessary due to weight constraints during lifting of the TC. This cover shall be replaced with the standard OS197L TC top cover before the OS197L TC leaves the Cask handling area.*

4.4.5 *The placement of the Outer Top Shield of the Transfer Trailer Shield on the loaded OS197L TC shall not be delayed (i.e., placement takes place outside the building) unless building load limits would be exceeded.*

4.4.6 *During TRANSFER OPERATION of a loaded OS197L TC, every one hour, visually monitor the Outer Top Trailer Shield vents and the opening around the cask ends for any sign of steaming which may indicate leakage of water from the cask neutron shield. If steaming is determined to be due to leakage of neutron shield water and not due to any rain or snow or other ambient conditions, then licensee must take appropriate corrective actions including use of supplemental cooling or replenishing the neutron shield water or terminating the transfer operation and returning the loaded cask to the FUEL BUILDING for further assessment.*

5.0 ADMINISTRATIVE CONTROLS

5.1 Procedures

Each user of the standardized NUHOMS® System shall prepare, review, and approve written procedures for all normal operations(cask handling, loading movement and surveillance) and maintenance at the ISFSI prior to its operation. The operating procedures suggested generically in the FSAR should provide the basis for the user's written operating procedures. Written procedures shall be established, implemented, and maintained covering the following activities that are important to safety:

- Organization and management
- Routine ISFSI operations
- Alarms and annunciators
- Emergency operations
- Design control and facility change/modification
- Control of surveillances and tests
- Control of special processes
- Maintenance
- Health physics, including ALARA practices
- Special nuclear material accountability
- Quality assurance, inspection, and audits
- Physical security and safeguards
- Records management
- Reporting
- All programs specified in Section 5.2

The fuel removal procedure which shall be part of the users operating procedures as a minimum shall include:

If fuel needs to be removed from the DSC, either at the end of service life or for inspection after an accident, precautions must be taken against the potential for the presence of damaged or oxidized fuel and to prevent radiological exposure to personnel during this operation. This can be achieved with this design by the use of the purge and fill valves which permit a determination of the atmosphere within the DSC before the removal of the inner top cover and shield plugs, prior to filling the DSC cavity with water(borated water for the 24P or 32PT or 24PHB or 24PTH or 32PTH1). If the atmosphere within the DSC is helium *and radioactivity check of the atmosphere in the DSC cavity did not detect presence of any airborne radioactive particulates*, then operations should proceed normally with fuel removal either via the transfer cask or in the pool. However, if air *or airborne radioactive particulates are* present within the DSC, then appropriate filters should be in place to preclude the uncontrolled release of any potential airborne radioactive particulate from the DSC via the purge-fill valves. This will protect both personnel and the operations area from potential contamination. For the accident case, personnel protection in the form of respirators or supplied air should be considered in accordance with licensee's Radiation Protection Program.

5.1.1 DSC Loading, Unloading and Preparation Program

Each user of the standardized NUHOMS® System shall establish a program to implement the FSAR requirements for loading fuel and components into the DSC, unloading fuel and components from the DSC, and preparing the DSC for storage. The requirements of the programs for loading and preparing the DSC shall be complete prior to removing the DSC from the 10 CFR Part 50 structure. At a minimum, the program shall establish criteria that need to be verified to address FSAR commitments and regulatory requirements for LCOs listed in Technical Specifications 3.1.1, 3.1.2, 3.2.1, 4.3.3, 5.2.4c and 5.4.

The program shall include compensatory measures and appropriate completion times if the program requirements are not met.

5.1.2 ISFSI Operations Program

A program shall be established to implement the FSAR requirements for ISFSI operations.

At a minimum, the program shall verify that:

1. The HSMs are placed together in single rows or back-to-back arrays in accordance with the storage configuration specified in Technical Specification 4.3.1.
2. The concrete storage pad parameters are consistent with the FSAR analysis.
3. The maximum lifting heights for the cask system meet Technical Specification 5.3.1 requirements.

(continued)

5.2 Programs

Each user of the NUHOMS System will implement the following programs:

- 10CFR72.48 Evaluation Program
- Training Program
- Radiological Environmental Monitoring Program
- Radiation Protection Program
- HSM Thermal Monitoring Program

5.2.1 10CFR72.48 Evaluation Program

Users shall conduct evaluations in accordance with 10CFR 72.48 to determine whether proposed changes, tests, and experiments require NRC approval before implementation. Changes to the Technical Specification Bases and other licensing basis documents shall be conducted in accordance with approved administrative procedures.

Changes may be made to Technical Specification Bases and other licensing basis documents without prior NRC approval, provided the changes meet the criteria of 10CFR 72.48.

The evaluation process shall contain provisions to ensure that the Technical Specification Bases and other licensing basis documents are maintained consistent with the FSAR.

Proposed changes that do not meet the criteria above shall be reviewed and approved by the NRC before implementation. Changes to the Technical Specification Bases implemented without prior NRC approval shall be provided to the NRC in accordance with 10CFR 72.48.

(continued)

5.2 Programs (continued)

5.2.2 Training Program

Training modules shall be developed as required by 10CFR 72. Training modules shall require a comprehensive program for the operation and maintenance of the standardized NUHOMS® System and the independent spent fuel storage installation (ISFSI). The training modules shall include the following elements, at a minimum:

- Standardized NUHOMS® System design (overview)
- ISFSI Facility design (overview)
- Systems, Structures, and Components Important to Safety (overview)
- NUHOMS® System Updated Final Safety Analysis Report (overview)
- NRC Safety Evaluation Report (overview)
- Certificate of Compliance conditions (overview)
- NUHOMS® System Technical Specifications
- Applicable Regulatory Requirements (e.g.,10CFR 72, Subpart K, 10CFR 20, 10 CFR Part 73)
- Required Instrumentation and Use
- Operating Experience Reviews
- NUHOMS® System and Maintenance procedures, including:
  - Fuel qualification and loading,
  - Rigging and handling,
  - Loading Operations as described in Chapters 5, K.8, M.8, N.8, P.8, R.8, T.8, U.8, *and W.8* of the UFSAR,
  - Unloading Operations including reflooding,
  - Auxiliary equipment operations and maintenance (i.e., welding operations, vacuum drying, helium backfilling and leak testing, reflooding),
  - Transfer operations including loading and unloading of the Transfer Vehicle,
  - ISFSI Surveillance operations,
  - Radiation Protection,
  - Maintenance, as described in the UFSAR,
  - Security, and
  - Off-normal and accident conditions, responses and corrective actions.

5.2.3 Radiological Environmental Monitoring Program

a) A radiological environmental monitoring program shall be implemented to verify that the annual dose equivalent to an individual located outside the ISFSI controlled area does not exceed the annual dose limits specified in 10CFR 72.104(a).

b) Operation of the ISFSI does not create any radioactive materials or result in any credible liquid or gaseous effluent release.

(continued)

5.2.4 Radiation Protection Program

The Radiation Protection Program shall establish administrative controls to limit personnel exposure to As Low As Reasonably Achievable (ALARA) levels in accordance with 10CFR Part 20 and Part 72.

a) As part of its evaluation pursuant to 10CFR 72.212, the licensee shall perform an analysis to confirm that the limits of 10CFR 20 and 10CFR 72.104 will be satisfied under the actual site conditions and configurations considering the planned number of DSCs/HSMs to be used and the planned fuel loading conditions.

A dose assessment shall also be performed to account for occupational exposures during normal LOADING *and TRANSFER* OPERATIONS. If remote handling devices are used for movement of a TRANSFER CASK during LOADING OPERATIONS then the dose assessment shall include recovery from a potential malfunction of these devices. The licensee shall perform this dose assessment *including occupational and public exposures from off-normal and accident conditions* as a part of their 10CFR72.212 evaluations and augment their 10CFR20 radiation protection plan as required. The licensee shall develop appropriate measures (such as use of remote camera monitoring, use of temporary shielding etc.) to keep the dose rates ALARA during recovery from these potential malfunctions if needed. The licensee shall provide appropriate training to personnel involved in the possible repair/recovery operations.

When using OS-197L TC, the ALARA assessment shall include at least the assessment of occupational and public exposures associated with the following:

1. *Cask handling crane hangup during the movement of a loaded OS197L TC from the spent fuel pool to the decontamination area and from the decontamination area to the transfer trailer.*
2. *Surface and 100-meter dose rates on the transfer trailer without the top outer trailer shield in place for their impact on compliance with 10CFR72.104 dose rate values.*
3. *Worker doses associated with use of the Interim Cask Cover.*
4. *Worker doses associated with visual inspection of the openings at the top and bottom of the decontamination area shields.*
5. *Any other operation that has credible potential for high worker or public exposure.*

During the use of the OS197L TC (in normal, off-normal, or accident conditions), if a potential exists for setting off radiation alarms in the fuel handling building, appropriate measures shall be in place to address them. Impact on any normal plant operations requiring access to the fuel building or other locations at the facility critical to protecting public health and safety, including the control room shall be addressed.

(continued)

Remote operations or appropriate ALARA practices shall be used due to very high dose rates during movement of the loaded OS197L TC from fuel pool to the decontamination area and from the decontamination area to the transfer trailer. When remote operations are used redundancy of equipment and their quality standards shall be considered and appropriate quality standards for the remote handling equipment shall be assigned.

b) All DSC closure welds except those subjected to full volumetric inspection shall be dye penetrant tested in accordance with the requirements of the ASME Boiler and Pressure Vessel Code Section III, Division 1, Article NB-5000. The liquid penetrant test acceptance standards shall be those described in Subsection NB-5350 of the Code.

This criteria is applicable to all DSCs. The welds include inner and outer top and bottom covers, and vent and siphon port covers.

If the liquid penetrant test indicates that the weld is unacceptable:

1. The weld shall be repaired in accordance with approved ASME procedures, and

2. The new weld shall be re-examined in accordance with this specification.

c) Following completion of the seal weld of the DSC inner top cover plate/top shield plug assembly, *(including vent and siphon port cover)* this weld shall be leak tested with a helium leak detection device. The leak testing is performed to the criteria as listed below:

DSC Model	Leak Test Criterion	Reference
24P, 52B	$\leq 1 \times 10^{-4}$ atm.cm^3/sec	ANSI N14.5-1987
61BT, 32PT, 24PHB, 24PTH, 61BTH or 32PTH1	$\leq 1 \times 10^{-7}$ atm.cm^3/sec	"Leak-Tight" as defined in ANSI N14.5-1997

If the leakage rate of the inner seal weld exceeds the specified criterion, check and repair (a) the inner seal welds (b) the inner top cover *and port covers* for any surface indications resulting in leakage.

d) Following placement of each loaded TC/DSC into the cask decontamination area but prior to *seal weld of the DSC inner top cover plate/top shield plug assembly to DSC shell*, the DSC smearable surface contamination levels on the outer top 1 foot surface of the DSC shall be less than 2,200 dpm/100 cm^2 from beta and gamma sources, and less than 220 dpm/100 cm^2 from alpha sources.

(continued)

If the required limits are not met, any available commercial decontamination technique may be used to reduce the DSC surface contamination levels to below the required limits. If contamination levels are still not met, remove the fuel assemblies from the DSC and put them back in the fuel pool and remove the DSC from the TC Decon as necessary. Insert the clean DSC back in the TC. Check and replace the TC/DSC annulus seal if needed and repeat canister loading process.

e) *The TRANSFSR CASK (TC) total dose rate except for the OS197L TC shall be less than or equal to the value specified below for the various DSCs. The location of the dose rate measurement shall be at approximately 3 feet from the TC outside surface in the radial direction at the approximate centerline of the TC. The TC configuration at the time of dose measurement shall be after the TC is removed from the spent fuel pool and water is drained from the DSC cavity. The dose rates should be measured as soon possible after the TC is removed from the spent fuel pool when in the configuration defined above but before the TC is downended on the transfer trailer to be transferred to the ISFSI.*

Applicable DSC Model with TC (Except OS197L TC)	***TC Dose Rate (mrem/hour)***
24P, 52B, 61BT, or 32PT	*500*
24PHB	*500*
24PTH-S or 24PTH-L	*600*
24PTH-S-LC	*250*
61BTH	*500*
32PTH1	*300*

For the OS197L TC the total dose rate shall be less than or equal to the value specified below for the various DSCs. The location of the dose rate measurement shall be at approximate outside surface of the supplementary decontamination area shield at the approximate centerline of the shield in the radial direction used in the FUEL BUILDING. The OS197L TC configuration at the time of dose measurement shall be after the OS197L TC is removed from the spent fuel pool and water is drained from the DSC cavity and the OS197L TC is inside the decontamination area shield in the FUEL BUILDING. The dose rates should be measured as soon possible after the TC is removed from the spent fuel pool when in the configuration defined above but before the TC is downended on the transfer trailer to be transferred to the ISFSI.

Applicable DSC Model with Only OS197L TC	***TC Dose Rate (mrem/hour)***
24P, 52B, 61BT, or 32PT	*250*
24PHB	*250*

(continued)

The TC dose rate limits are specified to maintain dose rates as-low-as-reasonably-achievable during DSC TRANSFER OPERATIONS. These dose rate limits are based on the shielding analysis for the various DSCs included in the UFSAR Chapter 7 and Appendix J, Appendix K, Appendix M, Appendix N, Appendix P, Appendix T, Appendix U, and Appendix W with some added margin for uncertainty.

If the measured dose rates exceed above values, place temporary shielding around the affected areas of the transfer cask and review plant records of the fuel assemblies which have been placed in the DSC to ensure that they conform to the fuel specification of Technical Specification 2.1 for the applicable DSCs. Submit a letter report to the NRC within 30 days summarizing actions taken and the results of the surveillance, investigation and findings. The report must be submitted using instructions in 10 CFR 72.4 with a copy sent to the administrator of the appropriate NRC regional office.

5.2.5 HSM or HSM-H Thermal Monitoring Program

This program provides guidance for temperature measurements that are used to monitor the thermal performance of each HSM.

Note: Only one of the two alternate surveillance activities listed below (5.2.5a or 5.2.5b) shall be performed for monitoring the HSM or HSM-H thermal performance.

a) Daily Visual Inspection of the HSM or HSM-H Air Inlets and Outlets (Front Wall and Roof Bird Screens)

A daily visual surveillance shall be conducted of the exterior of the air inlets and outlets to ensure that HSM air vents are not blocked for periods longer than assumed in the safety analysis.

In addition, a visual inspection shall be performed to ensure that no materials accumulate between the modules (only applicable for HSM designs with gap between adjacent modules) that could block the air flow.

If the surveillance shows blockage of air vents (inlets or outlets), they shall be cleared. If the bird screen is damaged, it shall be replaced.

b) Daily HSM or HSM-H Temperature Measurement

Verify the thermal performance of each HSM or HSM-H via a direct temperature measurement on a daily basis. The temperature measurement could be any parameter such as (1) a direct measurement of the HSM or HSM-H temperatures, (2) a direct measurement of the DSC temperatures, (3) a comparison of the inlet and outlet temperature

(continued)

difference to predicted temperature differences for each individual HSM or HSM-H, or (4) other means that would identify and allow for the correction of off-normal thermal conditions that could lead to exceeding the concrete and fuel clad temperature criteria. If air temperatures are measured, they must be measured in such a manner as to obtain representative values of inlet and outlet air temperatures. Also, due to the proximity of adjacent HSM or HSM-H modules, care must be exercised to ensure that measured air temperatures reflect only the thermal performance of an individual module, and not the combined performance of adjacent modules.

If the temperature measurement shows a significant unexplained difference, so as to indicate the approach of materials to the concrete or fuel clad temperature criteria, take appropriate action to determine the cause and return the canister to normal operation. If the measurement or other evidence suggests that the concrete accident temperature criteria (350°F for HSM or the elevated temperature used in Section 5.5 to perform concrete testing for HSM-H) has been exceeded for more than 24 hours, the licensee can provide analysis results and/or test results in accordance with ACI-349, appendix A.4.3, demonstrating that the structural strength of the HSM or HSM-H has an adequate margin of safety. Take additional appropriate actions if necessary based on the results of the evaluation above.

The temperature measurement program should be of sufficient scope to provide the licensee with a positive means to identify conditions which threaten to approach temperature criteria for proper HSM or HSM-H operation and allow for the correction of off-normal thermal conditions that could lend to exceeding the concrete and fuel clad temperature criteria.

5.2.6 *Hydrogen Gas Monitoring for 24P, 52B, 24PHB, 61BT, 32PT, 24PTH, 61BTH and 32PTH1 DSCs*

For the 24P, 52B, 24PHB, 61BT, 32PT, 24PTH, 61BTH, and 32PTH1 DSCs, while welding the inner top cover plate during loading operations, and while cutting the outer or inner top cover plates during unloading operations, hydrogen monitoring of the space under the shield plug in the DSC cavity is required, to ensure that the combustible mixture concentration remains below the flammability limit.

(concluded)

5.3 Cask TRANSFER Controls

5.3.1 TC/DSC Lifting/Handling Height Limits

The requirements of 10 CFR Part 72 apply *to TC/DSC lifting/handling height limits* outside the FUEL BUILDING. The requirements of 10 CFR Part 50 apply *to TC/DSC lifting/handling height limits* inside the FUEL BUILDING.

A. TC/DSC Lifting/Handling Height at Low Temperature and Location

Confirm the basket temperature and ambient temperature before the TRANSFER OPERATIONS of the loaded TC/DSC.

The lifting/handling height of a loaded TC/DSC, is limited as a function of location and low temperature as follows:

- No lifts or handling of the TC/DSC at any height are permissible at DSC basket temperatures below -20°F inside the FUEL BUILDING.
- The maximum lift height of the TC/DSC shall be 80 inches if the basket temperature is below 0°F but higher than -20°F inside the FUEL BUILDING.
- No lift height restriction is imposed on the TC/DSC if the basket temperature is higher than 0°F inside the FUEL BUILDING.
- When handling a loaded TC/DSC at a height greater than 80 inches outside the FUEL BUILDING, a special lifting device that has at least twice the normal stress design factor for handling heavy loads, or a single failure proof handling system shall be used and the basket temperature may not be lower than 0°F.

The requirements of 10CFR Part 72 apply when the TC/DSC is in horizontal orientation on the transfer trailer. The requirements of 10CFR Part 50 apply when the TC/DSC is being lifted/handled using the cask handling crane/hoist. If calculation or measurement of the basket temperature is unavailable, then the ambient temperature may be conservatively used.

B. TC/DSC TRANSFER OPERATIONS at High Ambient Temperatures

- The ambient temperature for TRANSFER OPERATIONS of a loaded TC/DSC (24P, 52B, 61BT, 32PT, 24PHB, 24PTH, or 61BTH DSC) shall not be greater than 100°F (when the cask is exposed to direct insolation). The corresponding ambient temperature limit for a TC with a loaded 32PTH1 DSC is 106°F.
- For TRANSFER OPERATIONS when ambient temperature exceeds 100°F (106°F for 32PTH1 TC/DSC), a solar shield shall be used to provide protection against direct solar radiation.
- This ambient temperature limit applies to all TRANSFER OPERATIONS of a loaded TC/DSC outside the FUEL BUILDING.
- Confirm what the ambient temperature is before transfer of the TC/DSC *and every 2 hours when the loaded cask is exposed to direct insolation during transfer operations if the ambient temperature before the transfer operation is greater than 100 °F* and provide appropriate solar shade if the ambient temperature is expected to exceed the above limits.

5.3 Cask TRANSFER Controls (continued)

5.3.2 Cask Drop

Inspection Requirement

The DSC shall be inspected for damage after any transfer cask drop of fifteen inches or greater. In the event of a drop of a loaded TC/DSC from height greater than 15 inches outside the FUEL BUILDING:

The DSC shall be inspected to ensure that it will continue to provide confinement of fuel. If the inspection reveals that above requirement is not satisfied, then fuel in the DSC shall be returned to the reactor spent fuel pool, the DSC shall be removed from the service and evaluated for further use, and the TC shall be inspected for damage and evaluated for further use.

5.3.3 TRANSFER CASK Alignment with HSM or HSM-H

The TRANSFER CASK shall be aligned with respect to the HSM or HSM-H such that the longitudinal centerline of the DSC in the transfer cask is within ± ⅛ inch of its true position when the transfer cask is docked with the HSM front access opening. This specification is applicable during the insertion and retrieval of all DSCs from the TRANSFER CASK to HSM and back.

If the alignment tolerance is exceeded, the following actions should be taken:

a. Confirm that the transfer systems is properly configured,
b. Check and repair the alignment equipment, or
c. Confirm the locations of the alignment targets on the transfer cask and HSM.

5.3.4 Supplemental Shielding Drop onto OS197L TC

The DSC and the OS197L TC shall be inspected for damaged and evaluated for further use after the accident drop of the supplemental shielding onto the OS197L TC.

5.4 HSM or HSM-H Dose Rate Evaluation Program

5.4.1 The licensee shall establish a set of HSM dose rate limits which are to be applied to DSCs used at the site to ensure the limits of 10CFR20 and 10CFR72.104 are met. Limits shall establish peak dose rates at the following three locations:

a. HSM front surface or 3 feet from the HSM front surface.
b. Outside HSM door at the HSM door centerline, and
c. End shield wall exterior.

5.4.2 Notwithstanding the limits established in 5.4.1, the dose rate limits listed below for the Standardized HSM and HSM-H shall be met when a specific DSC model loaded with fuel is stored within a module:

Dose Rate Limits for the Standardized HSM and HSM-H

DSC Model	Dose Rates, mrem/hr			
	HSM Front Surface	Outside HSM Door, at door Centre Line	@ End Shield Wall Exterior Surface	HSM Model
24P, 52B, 61BT	400(1)	100	20	Standardized HSM
32PT	800	200	8	Standardized HSM
24PHB	500	20	300	Standardized HSM
24PTH-S-LC	500	70	300	Standardized HSM or HSM-H
61BTH Type 1	700	100	20	Standardized HSM or HSM-H
24PTH-S, 24PTH-L	1300	5	10	HSM-H
61BTH Type 2	700	5	10	HSM-H
32PTH1	500	5	10	HSM-H

Note (1): This corresponds to Dose rate limit at 3 feet from the HSM front surface. There is no dose rate limit specified on the HSM front surface for these DSCs.

5.4.3 If the measured dose rates do not meet the limits of 5.4.1 or 5.4.2, whichever are lower, the licensee shall take the following actions until compliance is achieved:

a. Ensure proper installation of the HSM door *and check for any streaming around the door, AND*
b. Administratively verify that the spent fuel assemblies loaded in the DSC meet Section 2.0 limits, *AND*

(continued)

c. Ensure that the DSC is properly positioned on the support rails. If compliance is not achieved then proceed to d and e.
d. Perform an analysis to determine that placement of the as-loaded DSC at the ISFSI will not cause the ISFSI to exceed the radiation exposure limits of 10 CFR Part 20 and 72.104(a) and ALARA and/or provide additional temporary or permanent shielding to assure exposure limits are not exceeded, and
e. Notify the U.S. Nuclear Regulatory Commission (Director of the Office of Nuclear Material Safety and Safeguards) within 30 days, summarizing the actions taken and the results of the surveillance, investigation and findings. This report must be submitted using instructions in 10CFR 72.4 with a copy sent to the administrator of the appropriate NRC regional office.

(concluded)

5.5 Concrete Testing for HSM-H

HSM-H concrete shall be tested during the fabrication process for elevated temperatures to verify that there are no significant signs of spalling or cracking and that the concrete compressive strength is greater than that assumed in the structural analysis. Tests shall be performed at or above the calculated peak temperature and for a period no less than the 40 hour duration of HSM-H blocked vent transient for components exceeding 350 degrees F.

HSM concrete temperature testing shall be performed whenever there is a significant change in the cement, aggregates or water-cement ratio of the concrete mix design.

5.6 HSM-H Configuration Changes

The use of HSM-H thermal performance methodology is allowed for evaluating HSM-H configuration changes except for changes to the HSM-H cavity height, cavity width, elevation and cross-sectional areas of the HSM-M air inlet/outlet vents, total outside height, length and width of HSM-H if these changes exceed 8% of their nominal design values shown on the approved CoC Amendment No. 8 drawings.

Table 1-1a
PWR Fuel Specifications for Fuel to be Stored in the Standardized NUHOMS®-24P DSC

Title or Parameter	Specifications
Fuel	Only intact, unconsolidated PWR fuel assemblies (with or without BPRAs) with the following requirements.
Physical Parameters (without BPRAs)	
Maximum Assembly Length (unirradiated)	165.75 in (standard cavity) 171.71 in (long cavity)
Nominal Cross-Sectional Envelope	8.536 in
Maximum Assembly Weight	1682 lbs
No. of Assemblies per DSC	≤ 24 intact assemblies
Fuel Cladding	Zircaloy-clad fuel with no known or suspected gross cladding breaches
Physical Parameters (with BPRAs)	
Maximum Assembly + BPRA Length (unirradiated)	
With Burnup > 32,000 and ≤ 45,000 MWd/MTU	171.71 in (long cavity)
With Burnup ≤ 32,000 MWd/MTU	171.96 in (long cavity)
Nominal Cross-Sectional Envelope	8.536 in
Maximum Assembly + BPRA Weight	1682 lbs
No. of Assemblies per DSC	≤ 24 intact assemblies
No. of BPRAs per DSC	≤ 24 BPRAs
Fuel Cladding	Zircaloy-clad fuel with no known or suspected gross cladding breaches
Nuclear Parameters	
Fuel Initial Enrichment	≤ 4.0 wt. % U-235
Fuel Burnup and Cooling Time	Per Table 1-2a (without BPRAs) or Per Table 1-2c (with BPRAs)
BPRA Cooling Time (Minimum)	5 years for B&W Designs 10 years for Westinghouse Designs
Alternate Nuclear Parameters	
Initial Enrichment	≤ 4.0 wt. % U-235
Burnup	≤ 40,000 MWd/MTU
Decay Heat (Fuel + BPRA)	≤ 1.0 kW per assembly
Neutron Fuel Source	≤ 2.23×10^{8} n/sec per assy with spectrum bounded by that in Chapter 7 of FSAR
Gamma (Fuel + BPRA) Source	≤ 7.45×10^{15} g/sec per assy with spectrum bounded by that in Chapter 7 of FSAR

Table 1-1b
BWR Fuel Specifications for Fuel to be Stored in the Standardized NUHOMS®-52B DSC

Title or Parameter	Specifications
Fuel	Only intact, unconsolidated BWR fuel assemblies with the following requirements
Physical Parameters	
Maximum Assembly Length (unirradiated)	176.16 in
Nominal Cross-Sectional Envelope*	5.454 in
Maximum Assembly Weight	725 lbs
No. of Assemblies per DSC	≤ 52 intact channeled assemblies
Fuel Cladding	Zircaloy-clad fuel with no known or suspected gross cladding breaches
Nuclear Parameters	
Fuel Initial Lattice Enrichment	≤ 4.0 wt. % U-235
Fuel Burnup and Cooling Time	Per Table 1-2b
Alternate Nuclear Parameters	
Initial Enrichment	≤ 4.0 wt. % U-235
Burnup	≤ 35,000 MWd/MTU
Decay Heat	≤ 0.37 kW per assembly
Neutron Source	≤ 1.01×10^{8} n/sec per assy with spectrum bounded by that in Chapter 7 of FSAR
Gamma Source	≤ 2.63×10^{15} g/sec per assy with spectrum bounded by that in Chapter 7 of FSAR

*Cross-Sectional Envelope is the outside dimension of the fuel channel.

Table 1-1c
BWR Fuel Specifications for Fuel to be Stored in the Standardized NUHOMS®-61BT DSC

Physical Parameters	
Fuel Design	7x7, 8x8, 9x9, or 10x10 BWR fuel assemblies manufactured by General Electric or equivalent reload fuel that are enveloped by the fuel assembly design characteristics listed in Table 1-1d.
Cladding Material	Zircaloy
Fuel Damage	Cladding damage in excess of pinhole leaks or hairline cracks is not authorized to be stored as "Intact BWR Fuel."
Channels	Fuel may be stored with or without fuel channels
Maximum Assembly Length	176.2 in
Nominal Assembly Width (excluding channels)	5.44 in
Maximum Assembly Weight	705 lbs
Radiological Parameters: No interpolation of Radiological Parameters is permitted between Groups.	
Group 1	
Maximum Burnup	27,000 MWd/MTU
Minimum Cooling Time	5-years
Maximum Lattice Average Initial Enrichment	See Minimum Boron Loading below.
Minimum Initial Bundle Average Enrichment	2.0 wt. % U-235
Maximum Initial Uranium Content	198 kg/assembly
Maximum Decay Heat	300 W/assembly(1)
Group 2	
Maximum Burnup	35,000 MWd/MTU
Minimum Cooling Time	8-years
Maximum Lattice Average Initial Enrichment	See Minimum Boron Loading below.
Minimum Initial Bundle Average Enrichment	2.65 wt. % U-235
Maximum Initial Uranium Content	198 kg/assembly
Maximum Decay Heat	300 W/assembly(1)
Group 3	
Maximum Burnup	37,200 MWd/MTU
Minimum Cooling Time	6.5-years
Maximum Lattice Average Initial Enrichment	See Minimum Boron Loading below.
Minimum Initial Bundle Average Enrichment	3.38 wt. % U-235
Maximum Initial Uranium Content	198 kg/assembly
Maximum Decay Heat	300 W/assembly(1)
Group 4	
Maximum Burnup	40,000 MWd/MTU
Minimum Cooling Time	10-years
Maximum Lattice Average Initial Enrichment	See Minimum Boron Loading below.
Minimum Initial Bundle Average Enrichment	3.4 wt. % U-235
Maximum Initial Uranium Content	198 kg/assembly
Maximum Decay Heat	300 W/assembly(1)
Minimum Boron Loading	
Lattice Average Enrichment (wt. % U-235)	Minimum B-10 Content in Poison Plates
4.4	Type C Basket
4.1	Type B Basket
3.7	Type A Basket
Alternate Radiological Parameters:	
Maximum Initial Enrichment:	See Minimum Boron Loading Above
Fuel Burnup, Initial Bundle Average Enrichment, and Cooling Time:	See Table 1-2q
Maximum Initial Uranium Content:	198 kg/assembly
Maximum Decay Heat:	300 W/assembly(1)

(1) For FANP9 9x9-2 fuel assemblies, the maximum decay heat is limited to 0.21 kW/assembly

Table 1-1d
BWR Fuel Assembly Design Characteristics (1) (2)
for the NUHOMS®-61BT DSC

Transnuclear, ID	**7x7-49/0(5)**	**8x8-63/1(5)**	**8x8-62/2(5)**	**8x8-60/4(5)**	**8x8-60/1(5)**	**9x9-74/2**	**10x10-92/2**	**7x7-49/0(5)**	**7x7-48/1Z(5)**	**8x8-60/4Z(5)**	**9x9-79/2**
GE Designations	GE1 GE2 GE3	GE4	GE-5 GE-Pres GE-Barrier GE8 Type I	GE8 Type II	GE9 GE10	GE11 GE13	GE12	ENC III-A	ENC III(3)	ENC Va & ENC Vb	FANP9 9x9-2
Max Length (in) (Unirradiated)	176.2	176.2	176.2	176.2	176.2	176.2	176.2	176.2	176.2	176.2	176.2
Nominal Width (in) (excluding channels)	5.44	5.44	5.44	5.44	5.44	5.44	5.44	5.44	5.44	5.44	5.44
Fissile Material	UO_2	UO_2	UO_2	UO_2	UO_2	UO_2	UO_2	UO_2	UO_2	UO_2	UO_2
Number of Fuel Rods	49	63	62	60	60	66 – Full 8 – Partial	78 – Full 14 – Partial	49	48	60	79
Number of Water Holes	0	1	2	4	1	2	2	0	1(4)	4(4)	2

(1) Any fuel channel thickness from 0.065 to 0.120 inch is acceptable on any of the fuel designs.
(2) Maximum fuel assembly weight with channel is 705 lb.
(3) Includes ENC III-E and ENC III-F.
(4) Solid Zirc rods instead of water holes.
(5) May be stored as damaged fuel.

Table 1-1e
PWR Fuel Specifications for Fuel to be Stored in the NUHOMS®-32PT DSC

PHYSICAL PARAMETERS:	
Fuel Assembly Class	Only intact (including reconstituted) B&W 15x15, WE 17x17, CE 15x15, WE 15x15, CE 14x14 and WE 14x14 class PWR assemblies or equivalent reload fuel manufactured by other vendors that are enveloped by the fuel assembly design characteristics listed in Table 1-1f.
Reconstituted Fuel Assemblies	≤ 32 assemblies per DSC with up to 56 stainless steel rods per assembly or unlimited number of lower enrichment UO_2 rods per assembly.
Fuel Cladding Material	Zircaloy
Fuel Damage	Cladding damage in excess of pinhole leaks or hairline cracks is not authorized to be stored as "Intact PWR Fuel."
Control Components (CCs)	• Up to 32 CCs are authorized for storage with all fuel assemblies except CE 15x15 class assemblies. • Authorized CCs include Burnable Poison Rod Assemblies (BPRAs), Thimble Plug Assemblies (TPAs), Control Rod Assemblies (CRAs), Rod Cluster Control Assemblies (RCCAs), Axial Power Shaping Rod Assembly (APSRAs), Orifice Rod Assemblies (ORAs), Vibration Suppression Inserts (VSIs), Neutron Source Assemblies (NSAs) and Neutron Sources. • Design basis thermal and radiological characteristics for the CCs are listed in Table 1-1ee.
Maximum Assembly plus CC Weight	-1365 lbs for 32PT-S100 & 32PT-L100 System -1682 lbs for 32PT-S125 & 32PT-L125 System
CC Damage	CCs with cladding failures are acceptable for loading.
THERMAL/RADIOLOGICAL PARAMETERS:	
Fuel Burnup and Cooling Time without CCs[1]	Per Table 1-2d, Table 1-2e, Table 1-2f, Table 1-2g, Table 1-2h, and Figure 1-2 or Figure 1-3 or Figure 1-4.
Fuel Burnup and Cooling Time with CCs[1]	Per Table 1-2i, Table 1-2j, Table 1-2k, Table 1-2l, Table 1-2m and Figure 1-2 or Figure 1-3 or Figure 1-4.
Initial Enrichment	Per Table 1-1g and Figure 1-5 or Figure 1-6 or Figure 1-7.

[1] BPRAs are considered as being representative of all CCs.

Table 1-1f
PWR Fuel Assembly Design Characteristics for the NUHOMS®-32PT DSC

Assembly Class	B&W 15x15	WE 17x17	CE 15x15[3], [4]	WE 15x15	CE 14x14	WE 14x14
DSC Configuration	**Max Unirradiated Length (in)**					
32PT-S100/32PT-S125	165.75[1]	165.75[1]	165.75	165.75[1]	165.75[1]	165.75[1]
32PT-L100/32PT-L125	171.71[1]	171.71[1]	171.71	171.71[1]	171.71[1]	171.71[1]
Fissile Material	UO_2	UO2	UO_2	UO_2	UO_2	UO_2
Maximum MTU/assembly[2]	0.475	0.475	0.475	0.475	0.475	0.475
Maximum Number of Fuel Rods	208	264	216	204	176	179
Maximum Number of Guide/ Instrument Tubes	17	25	9	21	5	17

(1) Maximum Assembly + CC Length (unirradiated)
(2) The maximum MTU/assembly is based on the shielding analysis. The listed value is higher than the actual.
(3) CE 15x15 assemblies with stainless steel plugging clusters installed are acceptable.
(4) Control Components are not authorized for storage with CE 15x15 class assemblies.

Table 1-1g
Initial Enrichment and Required Number of PRAs and Minimum Soluble Boron Loading (NUHOMS®-32PT DSC)

Assembly Class	Soluble Boron Loading (ppm)	No PRAs (Type A)			4 PRAs (Type B)		8 PRAs (Type C)		16 PRAs (Type D)	
		Poison Plate Configuration			Poison Plate Configuration		Poison Plate Configuration		Poison Plate Configuration	
		16	20	24	20	24	20	24	20	24
WE 17x17 Fuel Assembly(1)	2500	3.40	3.40	3.40	4.00	4.00	4.50	4.50	5.00	5.00
B&W 15x15 Mark B Fuel Assembly(1)	2500	3.30	3.30	3.30	3.90	3.90	NE	NE	5.00	5.00
WE 15x15 Fuel Assembly (without CC)	2500	3.40	3.40	3.40	4.00	4.00	4.60	4.60	5.00	5.00
WE 15x15 Fuel Assembly (with CC)	2500	3.40	3.35	3.40	4.00	4.00	4.55	4.55	5.00	5.00
CE 14x14 Fuel Assembly (without CC)	1800	3.35	NE	3.50	NE	4.00	NE	4.35	NE	NE
	2000	3.50	NE	3.70	NE	4.20	NE	4.55	NE	NE
	2100	3.60	NE	3.80	NE	4.30	NE	4.70	NE	NE
	2200	3.70	NE	3.90	NE	4.40	NE	4.80	NE	NE
	2300	3.75	NE	4.00	NE	4.50	NE	4.90	NE	NE
	2400	3.80	NE	4.05	NE	4.60	NE	5.00	NE	NE
	2500	3.90	3.80	4.15	4.60	4.70	--	--	NE	NE
CE 14x14 Fuel Assembly (with CC)	1800	3.30	NE	3.45	NE	3.90	NE	4.25	NE	NE
	2000	3.45	NE	3.65	NE	4.10	NE	4.50	NE	NE
	2100	3.55	NE	3.75	NE	4.20	NE	4.60	NE	NE
	2200	3.60	NE	3.80	NE	4.30	NE	4.70	NE	NE
	2300	3.65	NE	3.90	NE	4.40	NE	4.80	NE	NE
	2400	3.80	NE	4.00	NE	4.50	NE	4.90	NE	NE
	2500	3.90	3.70	4.05	4.45	4.60	4.95	5.00	NE	NE
WE 14x14 Fuel Assembly (with and without CC)	1800	3.55	NE	3.75	NE	4.40	NE	NE	NE	NE
	2000	3.75	NE	3.90	NE	4.60	NE	NE	NE	NE
	2100	3.80	NE	4.00	NE	4.75	NE	NE	NE	NE
	2200	3.90	NE	4.10	NE	4.85	NE	NE	NE	NE
	2300	4.00	NE	4.20	NE	5.00	NE	NE	NE	NE
	2400	4.10	NE	4.30	NE	--	NE	NE	NE	NE
	2500	4.15	4.00	4.40	5.00	--	NE	NE	NE	NE
CE 15x15 Fuel Assembly	1800	3.00	NE	3.15	NE	NE	NE	NE	NE	NE
	2000	3.15	NE	3.30	NE	NE	NE	NE	NE	NE
	2100	3.20	NE	3.40	NE	NE	NE	NE	NE	NE
	2200	3.30	NE	3.50	NE	NE	NE	NE	NE	NE
	2300	3.35	NE	3.55	NE	NE	NE	NE	NE	NE
	2400	3.40	NE	3.60	NE	NE	NE	NE	NE	NE
	2500	3.50	3.40	3.70	NE	NE	NE	NE	NE	NE

NOTES:
(1) With or without CCs. CCs shall not be stored in basket location where a PRA is required.
NE = Not Evaluated

Table 1-1h
B10 Specification for *the NUHOMS®-32PT* Poison Plates

NUHOMS®-32PT DSC Basket Type	*Minimum B-10 Areal Density (gm/cm²)*
A	*0.007*
B	*0.007*
C	*0.007*
D	*0.007*

Table 1-1i
PWR Fuel Specification for Fuel to be Stored in the Standardized NUHOMS®-24PHB DSC

Title or Parameter	Specifications
Fuel	Only intact, unconsolidated B&W 15x15 (with or without BPRAs), WE 17x17, WE 15x15, CE 14x14, and WE 14x14 (all without BPRAs) Class PWR fuel assemblies or equivalent reload fuel manufactured by other vendor, with the following requirements
Maximum No. of Reconstituted Assemblies per DSC with Stainless Steel rods	4
Maximum No. of Stainless Steel Rods per Reconstituted Assembly	10
Maximum No. of Reconstituted Assemblies per DSC with low enriched uranium oxide rods	24
Physical Parameters (without BPRAs)	
Maximum Assembly Length (unirradiated)	165.785 in (standard cavity) 171.96 in (long cavity)
Nominal Cross-Sectional Envelope	8.536 in
Maximum Assembly Weight	1682 lbs
No. of Assemblies per DSC	≤ 24 intact assemblies
Fuel Cladding	Zircaloy-clad fuel with no known or suspected gross cladding breaches
Physical Parameters (with BPRAs)	
Maximum Assembly + BPRA Length (unirradiated)	171.96 in (long cavity)
Nominal Cross-Sectional Envelope	8.536 in
Maximum Assembly + BPRA Weight	1682 lbs
No. of Assemblies per DSC	≤ 24 intact assemblies
No. of BPRAs per DSC	≤ 24 BPRAs
Fuel Cladding	Zircaloy-clad fuel with no known or suspected gross cladding breaches
Nuclear Parameters	
Maximum Fuel Initial Enrichment	4.5 wt. % U-235
Maximum Initial Uranium loading per assembly	0.490 MTU
Allowable loading configurations for each 24PHB DSC	As specified in Figure 1-8 or 1-9
Burnup, Enrichment, and Minimum Cooling Time for Configuration 1 (Figure 1-8)	Table 1-2n for Zone 1 fuel; Table 1-2o for Zone 2 fuel; Table 1-2p for Zone 3 fuel
Burnup, Enrichment, and Minimum Cooling Time for Configuration 2 (Figure 1-9)	Table 1-2p for Zone 3 fuel
Minimum Cooling Time for BPRAs	5 years
Total Decay Heat per DSC	24 kW
Decay Heat Limits for Zone 1, 2 and 3 fuel	As specified in Figures 1-8 and 1-9.

Table 1-1j
BWR Fuel Specification of Damaged Fuel to be Stored in the Standardized NUHOMS®-61BT DSC

PHYSICAL PARAMETERS:	
Fuel Design:	7x7, 8x8 BWR damaged fuel assemblies manufactured by General Electric or Exxon/ANF or equivalent reload fuel that are enveloped by the Fuel assembly design characteristics listed in Table 1-1d for the 7x7 and 8x8 designs only.
Cladding Material:	Zircaloy
Fuel Damage:	Damaged BWR fuel assemblies are fuel assemblies containing fuel rods with known or suspected cladding defects greater than hairline cracks or pinhole leaks. Missing cladding and/or crack size in the fuel pins is to be limited such that a fuel pellet is not able to pass through the gap created by the cladding opening during handling and retrievability is assured following Normal/Off-Normal conditions. Damaged fuel shall be stored with Top and Bottom Caps for Failed Fuel. Damaged fuel may only be stored in the 2x2 compartments of the "Type C" NUHOMS®-61BT Canister.
Channels:	Fuel may be stored with or without fuel channels.
Maximum Assembly Length (unirradiated)	176.2 in
Nominal Assembly Width (excluding channels)	5.44 in
Maximum Assembly Weight	705 lbs
RADIOLOGICAL PARAMETERS:	No interpolation of Radiological Parameters is permitted between groups.
Group 1:	
Maximum Burnup:	27,000 MWd/MTU
Minimum Cooling Time:	5-years
Maximum Initial Lattice Average Enrichment:	4.0 wt. % U-235
Maximum Pellet Enrichment:	4.4 wt. % U-235
Minimum Initial Bundle Average Enrichment:	2.0 wt. % U-235
Maximum Initial Uranium Content:	198 kg/assembly
Maximum Decay Heat:	300 W/assembly
Group 2:	
Maximum Burnup:	35,000 MWd/MTU
Minimum Cooling Time:	8-years
Maximum Initial Lattice Average Enrichment:	4.0 wt. % U-235
Maximum Pellet Enrichment:	4.4 wt. % U-235
Minimum Initial Bundle Average Enrichment:	2.65 wt. % U-235
Maximum Initial Uranium Content:	198 kg/assembly
Maximum Decay Heat:	300 W/assembly
Group 3:	
Maximum Burnup:	37,200 MWd/MTU
Minimum Cooling Time:	6.5-years
Maximum Initial Lattice Average Enrichment:	4.0 wt. % U-235
Maximum Pellet Enrichment:	4.4 wt. % U-235
Minimum Initial Bundle Average Enrichment:	3.38 wt. % U-235
Maximum Initial Uranium Content:	198 kg/assembly
Maximum Decay Heat:	300 W/assembly

Table 1-1j
BWR Fuel Specification of Damaged Fuel to be Stored in the Standardized NUHOMS®-61BT DSC

(Concluded)

RADIOLOGICAL PARAMETERS:	
Group 4:	
Maximum Burnup:	40,000 MWd/MTU
Minimum Cooling Time:	10-years
Maximum Initial Lattice Average Enrichment:	4.0 wt. % U-235
Maximum Pellet Enrichment:	4.4 wt. % U-235
Minimum Initial Bundle Average Enrichment:	3.4 wt. % U-235
Maximum Initial Uranium Content:	198 kg/assembly
Maximum Decay Heat:	300 W/assembly
ALTERNATE RADIOLOGICAL PARAMETERS:	
Maximum Initial Lattice Average Enrichment:	4.0 wt. % U-235
Fuel Burnup, Initial Bundle Average Enrichment, and Cooling Time:	See Table 1-2q
Maximum Pellet Enrichment:	4.4 wt. % U-235
Maximum Initial Uranium Content:	198 kg/assembly
Maximum Decay Heat:	300 W/assembly

Table 1-1k
B10 Specification for the NUHOMS®-61BT Poison Plates

NUHOMS®-61BT DSC Basket Type	Minimum B10 Areal Density, gm/cm^2	
	Enriched Boron Aluminum Alloy or Boralyn®(1)	Boral® or Metamic®(2)
A	.021	.025
B	.032	.038
C	.040	.048

Note 1: An alternate metal matrix composite with properties equivalent to Boralyn® is acceptable.
Note 2: An alternate metal matrix composite with properties equivalent to Metamic® is acceptable.

Table 1-1l
PWR Fuel Specification for the Fuel to be Stored in the NUHOMS®-24PTH DSC

PHYSICAL PARAMETERS:	
Fuel Class	Intact or damaged unconsolidated B&W 15x15, WE 17x17, CE 15x15, WE 15x15, CE 14x14 and WE 14x14 class PWR assemblies (with or without control components) that are enveloped by the fuel assembly design characteristics listed in Table 1-1m. Equivalent reload fuel manufactured by other vendors but enveloped by the design characteristics listed in Table 1-1m is also acceptable.
Fuel Damage	Damaged PWR fuel assemblies are assemblies containing missing or partial fuel rods or fuel rods with known or suspected cladding defects greater than hairline cracks or pinhole leaks. The extent of cladding damage in the fuel rods is to be limited such that a fuel pellet is not able to pass through the damaged cladding opening during handling and retrievability is assured following normal and off-normal conditions.
Partial Length Shield Assemblies (PLSAs)	WE 15x15 class PLSAs *which have only ever been irradiated in peripheral core locations* with following characteristics are authorized: • Maximum burnup, 40 GWd/MTU • Minimum cooling time, 6.5 years • Maximum decay heat, 900 watts
Reconstituted Fuel Assemblies: • Maximum No. of Reconstituted Assemblies per DSC with Irradiated Stainless Steel Rods • Maximum No. of Irradiated Stainless Steel Rods per Reconstituted Fuel Assembly • Maximum No. of Reconstituted Assemblies per DSC with unlimited number of low enriched UO_2 rods and/or Unirradiated Stainless Steel Rods and/or Zr Rods or Zr Pellets	4 10 24
Control Components (CCs)	• Up to 24 CCs are authorized for storage in 24PTH-L and 24PTH-S-LC DSCs only. • Authorized CCs include Burnable Poison Rod Assemblies (BPRAs), Thimble Plug Assemblies (TPAs), Control Rod Assemblies (CRAs), Rod Cluster Control Assemblies (RCCAs), Axial Power Shaping Assembly Rods (APSRAs), Orifice Rod Assemblies (ORAs), Vibration Suppression Inserts (VSIs), Neutron Source Assemblies (NSAs), and Neutron Sources. • Design basis thermal and radiological characteristics for the CCs are listed in Table 1-1n.
Nominal Assembly Width	8.536 inches
No. of Intact Assemblies	≤24
No. and Location of Damaged Assemblies	Maximum of 12 damaged fuel assemblies. Balance may be intact fuel assemblies, empty slots, or dummy assemblies depending on the specific heat load zoning configuration. Damaged fuel assemblies are to be placed in Location A and/or B as shown in Figure 1-16. The DSC basket cells which store damaged fuel assemblies are provided with top and bottom end caps to assure retrievability.
Maximum Assembly plus CC Weight	1682 lbs

Table 1-1l
PWR Fuel Specification for the Fuel to be Stored in the NUHOMS®-24PTH DSC
(Concluded)

THERMAL/RADIOLOGICAL PARAMETERS:	
Allowable Heat Load Zoning Configurations for each 24PTH DSC	Per Figure 1-11 or Figure 1-12 or Figure 1-13 or Figure 1-14 or Figure 1-15.
Burnup, Enrichment, and Minimum Cooling Time for Configuration 1 (Without CCs)	Per Table 1-3a for Zone 1 fuel.
Burnup, Enrichment, and Minimum Cooling Time for Configuration 2 (Without CCs)	Per Table 1-3b for Zone 2 fuel.
Burnup, Enrichment, and Minimum Cooling Time for Configuration 3 (Without CCs)	Per Table 1-3b for Zone 2 fuel and Table 1-3c for Zone 3 fuel.
Burnup, Enrichment, and Minimum Cooling Time for Configuration 4 (Without CCs)	Per Table 1-3d for Zone 4 fuel.
Burnup, Enrichment, and Minimum Cooling Time for Configuration 5 (Without CCs)	Per Table 1-3c for Zone 3 fuel and Table 1-3d for Zone 4 fuel.
Burnup, Enrichment, and Minimum Cooling Time for Configuration 1 (With CCs)	Per Table 1-3e for Zone 1 fuel.
Burnup, Enrichment, and Minimum Cooling Time for Configuration 2 (With CCs)	Per Table 1-3f for Zone 2 fuel.
Burnup, Enrichment, and Minimum Cooling Time for Configuration 3 (With CCs)	Per Table 1-3f for Zone 2 fuel and per Table 1-3g for Zone 3 fuel.
Burnup, Enrichment, and Minimum Cooling Time for Configuration 4 (With CCs)	Per Table 1-3h for Zone 4 fuel.
Burnup, Enrichment, and Minimum Cooling Time for Configuration 5 (With CCs)	Per Table 1-3g for Zone 3 fuel and per Table 1-3h for Zone 4 fuel.
Maximum Initial Fuel Enrichment	5.0 wt. % U-235
Decay Heat	Type 1 Basket: ≤ 40.8 kW for 24PTH-S and 24PTH-L DSCs with decay heat limits for Zones 1, 2, 3 and 4 as specified in Figure 1-11 or Figure 1-12 or Figure 1-13 or Figure 1-14.
	Type 2 Basket: Same as Type 1 Basket except ≤ 31.2 kW/DSC and ≤ 1.3 kW/fuel assembly for 24PTH-S and 24PTH-L DSCs. ≤ 24.0 kW for 24PTH-S-LC DSC with decay heat limits as specified in Figure 1-15.
Minimum Boron Loading in the Poison Plates	Per Table 1-1r

Table 1-1m
PWR Fuel Assembly Design Characteristics for the NUHOMS®-24PTH DSC

Assembly Class		B&W 15x15	WE 17x17	CE 15x15	WE 15x15	CE 14x14	WE 14x14
Maximum Unirradiated Length (in) (1)	24PTH-S	165.75	165.75	165.75	165.75	165.75	165.75
	24PTH-L	171.93	171.93	171.93	171.93	171.93	171.93
	24PTH-S-LC	171.93	N/A(3)	N/A(3)	N/A(3)	N/A(3)	N/A(3)
Fissile Material		UO_2	UO_2	UO_2	UO_2	UO_2	UO_2
Maximum MTU/Assembly(2)		0.49	0.49	0.49	0.49(4)	0.49	0.49
Maximum Number of Fuel Rods		208	264	216	204	176	179
Maximum Number of Guide/ Instrument Tubes		17	25	9	21	5	17

(1) Maximum Assembly + Control Component Length (unirradiated)
(2) The maximum MTU/assembly is based on the shielding analysis. The listed value is higher than the actual.
(3) Not authorized for storage.
(4) The maximum MTU/assembly for WE 15x15 PLSA = 0.33.

Table 1-1n
Thermal and Radiological Characteristics for Control Components Stored in the NUHOMS® -24PTH DSC

Parameter	BPRAs, NSAs, CRAs, *RCCAs, VSIs, Neutron Sources* and APSRAs	TPAs and ORAs
Maximum Gamma Source (γ/sec/DSC)	9.3E+14	9.8E+13
Decay Heat (Watts/DSC)	192.0	192.0

Table 1-1p
Maximum Assembly Average Initial Enrichment v/s Neutron Poison Requirements for the NUHOMS® -24PTH DSC (Intact Fuel)

Fuel Assembly Class	Maximum Assembly Average Initial Enrichment (wt. % U-235) as a Function of Soluble Boron Concentration and Basket Type (Fixed Poison Loading)			
	Minimum Soluble Boron (ppm)	Basket Type		
		1A or 2A	1B or 2B	1C or 2C
CE 14x14 (1)	2100	4.50	4.90	NR
	2200	4.60	5.00	NR
	2300	4.70	NR	NR
	2400	4.80	NR	NR
	2500	4.90	NR	NR
	2600	5.00	NR	NR
WE 14x14 (2)	2100	4.80	5.00	NR
	2200	4.90	NR	NR
	2300	5.00	NR	NR
CE 15x15 (2)	2100	3.90	4.20	4.60
	2200	4.00	4.40	4.70
	2300	4.10	4.50	4.80
	2400	4.20	4.60	4.90
	2500	4.30	4.70	5.00
	2600	4.40	4.80	NR
	2700	4.50	4.90	NR
	2800	4.50	5.00	NR
	2900	4.60	NR	NR
	3000	4.70	NR	NR
WE 15x15 (2)	2100	3.80	4.20	4.60
	2200	3.90	4.30	4.70
	2300	4.00	4.40	4.80
	2400	4.10	4.50	4.90
	2500	4.20	4.60	5.00
	2600	4.30	4.70	NR
	2700	4.30	4.80	NR
	2800	4.40	4.90	NR
	2900	4.50	5.00	NR
	3000	4.60	NR	NR

Table 1-1p
Maximum Assembly Average Initial Enrichment v/s Neutron Poison Requirements for the NUHOMS® -24PTH DSC (Intact Fuel)
(Concluded)

Fuel Assembly Class	Maximum Assembly Average Initial Enrichment (wt. % U-235) as a Function of Soluble Boron Concentration and Basket Type (Fixed Poison Loading)			
	Minimum Soluble Boron (ppm)	Basket Type		
		1A or 2A	1B or 2B	1C or 2C
WE 17x17 (2)	2100	3.80	4.10	4.50
	2200	3.90	4.20	4.60
	2300	4.00	4.30	4.70
	2400	4.00	4.40	4.80
	2500	4.10	4.50	4.90
	2600	4.20	4.60	5.00
	2700	4.30	4.70	NR
	2800	4.40	4.80	NR
	2900	4.50	4.90	NR
	3000	4.60	5.00	NR
B&W 15x15 (2)	2100	3.60	4.00	4.30
	2200	3.70	4.10	4.50
	2300	3.80	4.20	4.60
	2400	3.90	4.30	4.70
	2500	4.00	4.40	4.80
	2600	4.10	4.50	4.90
	2700	4.20	4.60	5.00
	2800	4.20	4.70	NR
	2900	4.30	4.80	NR
	3000	4.40	4.90	NR

Notes:

(1) When CCs that extend into the active fuel region are stored, the maximum assembly average initial enrichment shall be reduced by 0.2 wt. %.
(2) When CCs that extend into the active fuel region are stored, the maximum assembly average initial enrichment shall be reduced by 0.05 wt. % or the soluble boron concentration shall increased by 50 ppm.

NR = Not Required.

Table 1-1q
Maximum Assembly Average Initial Enrichment v/s Neutron Poison Requirements for the NUHOMS® -24PTH DSC (Damaged Fuel)

Assembly Class	Maximum Number of Damaged Fuel Assemblies per DSC	Maximum Assembly Average Initial Enrichment (wt. % U-235) as a Function of Soluble Boron Concentration and Basket Type (Fixed Poison Loading)			
		Minimum Soluble Boron (ppm)	Basket Type		
			1A or 2A	1B or 2B	1C or 2C
CE 14x14 (1)	8	2150	NR	4.80	NR
	12	2150	NR	4.70	NR
	12	2450	4.50	5.00	NR
WE 14x14 (2)	12	2150	4.50	5.00	NR
CE 15x15 (2)	12	2150	NR	NR	4.50
	12	2550	NR	NR	5.00
WE 15x15 (2)	8	2150	NR	NR	4.50
	12	2250	NR	NR	4.50
	8	2550	NR	NR	5.00
	12	2650	NR	NR	5.00
B&W 15x15 (2)	12	2350	NR	NR	4.50
	12	2800	NR	NR	5.00
WE 17x17 (2)	12	2250	NR	NR	4.50
	12	2650	NR	NR	5.00

Notes:

(1) When CCs that extend into the active fuel region are stored, the maximum assembly average initial enrichment shall be reduced by 0.2 wt. %.

(2) When CCs that extend into the active fuel region are stored, the maximum assembly average initial enrichment shall be reduced by 0.05 wt. % or the soluble boron concentration shall increased by 50 ppm.

NR = Not Required.

Table 1-1r
B10 Specification for the NUHOMS®-24PTH Poison Plates

NUHOMS®-24PTH DSC Basket Type(1)	Minimum B10 Areal Density, gm/cm^2	
	Natural or Enriched Boron Aluminum Alloy / Metal Matrix Composite (MMC)	Boral®
1A or 2A	.007	.009
1B or 2B	.015	.019
1C or 2C	.032	.040

(1) Basket Type 1 contains aluminum inserts in the R45 transition rails of the basket, Type 2 does not contain aluminum inserts.

Table 1-1s
Specification for the Metal Matrix Composite (MMC) for the NUHOMS®-24PTH Poison Plates

No.	Specification
1	The metal matrix composite shall consist of boron carbide powder in an aluminum alloy matrix.
2	The boron carbide content shall be limited to a maximum 40% by volume.
3	No more than 10 wt % of the boron carbide powder shall be larger than 60 microns.
4	The product shall be at least 98% of theoretical density.
5	The composite final product form shall have the tensile properties: • Minimum yield strength, 0.2% offset: 1.5 ksi • Minimum ultimate strength: 5.0 ksi • Minimum elongation in 2 inches: 1%

Table 1-1t
BWR Fuel Specification for the Fuel to be Stored in the NUHOMS®-61BTH DSC

PHYSICAL PARAMETERS:	
Fuel Class	Intact or damaged 7x7, 8x8, 9x9 or 10x10 BWR assemblies manufactured by General Electric or Exxon/ANF or FANP or reload fuel manufactured by other vendors that are enveloped by the fuel assembly design characteristics listed in Table 1-1u. *Damaged fuel assemblies beyond the definition contained below are not authorized for storage.*
Fuel Damage	Damaged BWR fuel assemblies are assemblies containing fuel rods with known or suspected cladding defects greater than hairline cracks or pinhole leaks. The extent of damage in the fuel assembly is to be limited such that the fuel assembly will still be able to be handled by normal means and retrievability is assured following normal and off-normal conditions. Missing fuel rods are allowed.
RECONSTITUTED FUEL ASSEMBLIES:	
• Maximum No. of Reconstituted Assemblies per DSC with Irradiated Stainless Steel Rods	4
• Maximum No. of Irradiated Stainless Steel Rods per Reconstituted Fuel Assembly	10
• Maximum No. of Reconstituted Assemblies per DSC with unlimited number of low enriched UO2 rods or Zr Rods or Zr Pellets or Unirradiated Stainless Steel Rods	61
No. of Intact Assemblies	≤ 61
No. and Location of Damaged Assemblies	Up to 16 damaged fuel assemblies, with balance intact or dummy assemblies, are authorized for storage in 61BTH DSC. Damaged fuel assemblies may only be stored in the 2x2 compartments as shown in Figure 1-25. The DSC basket cells which store damaged fuel assemblies are provided with top and bottom end caps to assure retrievability.
Channels	Fuel may be stored with or without channels, channel fasteners, or finger springs
Maximum Initial Uranium Content	198 kg/assembly
Maximum Assembly Weight with Channels	705 lbs

Table 1-1t
BWR Fuel Specification for the Fuel to be Stored in the NUHOMS®-61BTH DSC
(Concluded)

THERMAL/RADIOLOGICAL PARAMETERS:	
Allowable Heat Load Zoning Configurations for each Type 1 61BTH DSC	Per Figure 1-17 or Figure 1-18 or Figure 1-19 or Figure 1-20.
Allowable Heat Load Zoning Configurations for each Type 2 61BTH DSC:	Per Figure 1-17 or Figure 1-18 or Figure 1-19 or Figure 1-20 or Figure 1-21 or Figure 1-22 or Figure 1-23 or Figure 1-24.
Burnup, Enrichment, and Minimum Cooling Time for Heat Load Zoning Configuration 1	Per Table 1-4c for Zone 3 fuel.
Burnup, Enrichment, and Minimum Cooling Time for Heat Load Zoning Configuration 2	Per Table 1-4b for Zone 2 fuel, Table 1-4d for Zone 4 fuel, and Table 1-4e for Zone 5 fuel.
Burnup, Enrichment, and Minimum Cooling Time for Heat Load Zoning Configuration 3	Per Table 1-4b for Zone 2 fuel.
Burnup, Enrichment, and Minimum Cooling Time for Heat Load Zoning Configuration 4	Per Table 1-4a for Zone 1 fuel, Table 1-4b for Zone 2 fuel, Table 1-4d for Zone 4 fuel, and Table 1-4e for Zone 5 fuel.
Burnup, Enrichment, and Minimum Cooling Time for Heat Load Zoning Configuration 5	Per Table 1-4b for Zone 2 fuel and Table 1-4e for Zone 5 fuel.
Burnup, Enrichment, and Minimum Cooling Time for Heat Load Zoning Configuration 6	Per Table 1-4a for Zone 1 fuel, Table 1-4d for Zone 4 fuel, Table 1-4e for Zone 5 fuel, and Table 1-4f for Zone 6 fuel.
Burnup, Enrichment, and Minimum Cooling Time for Heat Load Zoning Configuration 7	Per Table 1-4d for Zone 4 fuel and Table 1-4e for Zone 5 fuel.
Burnup, Enrichment, and Minimum Cooling Time for Heat Load Zoning Configuration 8	Per Table 1-4b for Zone 2 fuel, Table 1-4c for Zone 3 fuel, Table 1-4d for Zone 4 fuel, and Table 1-4e for Zone 5 fuel.
Maximum Initial Lattice Average Enrichment	5.0 wt. % U-235
Maximum Pellet Enrichment	5.0 wt. % U-235
Maximum Decay Heat Limits for Zones 1, 2, 3, 4, 5 and 6 Fuel	Per Figure 1-17 or Figure 1-18 or Figure 1-19 or Figure 1-20 or Figure 1-21 or Figure 1-22 or Figure 1-23 or Figure 1-24
Decay Heat per DSC	≤ 22.0 kW for Type 1 DSC
	≤ 31.2 kW for Type 2 DSC
Minimum B10 Content in Poison Plates	Per Table 1-1v or Table 1-1w

Table 1-1u
BWR Fuel Assembly Design Characteristics(1) for the NUHOMS®-61BTH DSC

Transnuclear ID	7x7-49/0	8x8-63/1	8x8-62/2	8x8-60/4	8x8-60/1	9x9-74/2	10x10-92/2	7x7-49/0	7x7-48/1Z	8x8-60/4Z	8x8-62/2	9x9-79/2	Siemens QFA	10x10-91/1
Initial Design or Reload Fuel Designation	GE1 GE2 GE3	GE4	GE-5 GE-Pres GE-Barrier GE8 Type I	GE8 Type II	GE9 GE10	GE11 GE13	GE12 GE14	ENC-IIIA	ENC-III(2)	ENC Va ENC Vb	FANP 8x8-2	FANP9 9x9-2	9x9	ATRIUM-10
Max Length (in) (Unirradiated)	176.51	176.51	176.51	176.51	176.51	176.51	176.51	176.51	176.51	176.51	176.51	176.2	176.51	176.51
Fissile Material	UO2	UO_2	UO_2	UO_2	UO_2	UO_2	UO_2	UO_2	UO_2	UO_2	UO_2	UO_2	UO_2	UO_2
Maximum No. of Fuel Rods	49	63	62	60	60	74	92	49	48	60	62	79	72	91

(1) Any fuel channel thickness from 0.065 to 0.120 inch is acceptable on any of the fuel designs.
(2) Includes ENC-IIIE and ENC-IIIF.

Table 1-1v
BWR Fuel Assembly Lattice Average Enrichment v/s Minimum B10 Requirements for the NUHOMS®-61BTH DSC Poison Plates (Intact Fuel)

61BTH DSC Type	Basket Type	Maximum Lattice Average Enrichment (wt% U-235)	Minimum B10 Areal Density, *gram*/cm^2	
			Borated Aluminum/MMC	Boral®
1	A	3.7	***0.021***	***0.025***
	B	4.1	***0.032***	***0.038***
	C	4.4	***0.040***	***0.048***
	D	4.6	***0.048***	***0.058***
	E	4.8	***0.055***	***0.066***
	F	5.0	***0.062***	***0.075***
2	A	3.7	***0.022***	***0.027***
	B	4.1	***0.032***	***0.038***
	C	4.4	***0.042***	***0.050***
	D	4.6	***0.048***	***0.058***
	E	4.8	***0.055***	***0.066***
	F	5.0	***0.062***	***0.075***

Table 1-1w
BWR Fuel Assembly Lattice Average Enrichment v/s Minimum B10 Requirements for the NUHOMS®-61BTH DSC Poison Plates (Damaged Fuel)

61BTH DSC Type	Basket Type	Maximum Lattice Average Enrichment (wt% U-235)		Minimum B10 Areal Density, *gram*/cm^2	
		Up to 4 Damaged Assemblies(1)	Five or More Damaged Assemblies(1) (16 Maximum)	Borated Aluminum/MMC	Boral®
1	A	3.7	2.80	***0.021***	***0.025***
	B	4.1	3.10	***0.032***	***0.038***
	C	4.4	3.20	***0.040***	***0.048***
	D	4.6	3.40	***0.048***	***0.058***
	E	4.8	3.50	***0.055***	***0.066***
	F	5.0	3.60	***0.062***	***0.075***
2	A	3.7	2.80	***0.022***	***0.027***
	B	4.1	3.10	***0.032***	***0.038***
	C	4.4	3.20	***0.042***	***0.050***
	D	4.6	3.40	***0.048***	***0.058***
	E	4.8	3.50	***0.055***	***0.066***
	F	5.0	3.60	***0.062***	***0.075***

Note 1: See Figure 1-25 for the location of damaged fuel assemblies within the 61BTH DSC.

Table 1-1aa
PWR Fuel Specification for the Fuel to be Stored in the NUHOMS®-32PTH1 DSC

PHYSICAL PARAMETERS:	
Fuel Class	Intact or damaged unconsolidated B&W 15x15, WE 17x17, CE 15x15, WE 15x15, CE 14x14, WE 14x14 and CE 16x16 class PWR assemblies (with or without control components) that are enveloped by the fuel assembly design characteristics listed in Table 1-1bb. Reload fuel manufactured by other vendors but enveloped by the design characteristics listed in Table 1-1bb is also acceptable. *Damaged fuel assemblies beyond the definition contained below are not authorized for storage.*
Fuel Damage	Damaged PWR fuel assemblies are assemblies containing missing or partial fuel rods or fuel rods with known or suspected cladding defects greater than hairline cracks or pinhole leaks. The extent of damage in the fuel assembly is to be limited such that the fuel assembly will still be able to be handled by normal means and retrievability is assured following normal and off-normal conditions.
Reconstituted Fuel Assemblies:	
• Maximum No. of Reconstituted Assemblies per DSC With Irradiated Stainless Steel Rods	4
• Maximum No. of Irradiated Stainless Steel Rods per Reconstituted Fuel Assembly	10
• Maximum No. of Reconstituted Assemblies per DSC with unlimited number of low enriched UO_2 rods, or Zr Rods or Zr Pellets or Unirradiated Stainless Steel Rods	32
Control Components (CCs)	• Up to 32 CCs are authorized for storage in 32PTH1-S, 32PTH1-M and 32PTH1-L DSCs . • Authorized CCs include Burnable Poison Rod Assemblies (BPRAs), Thimble Plug Assemblies (TPAs), Control Rod Assemblies ((CRAs), Rod Cluster Control Assemblies (RCCAs), Axial Power Shaping Rod Assemblies (APSRAs), Orifice Rod Assemblies (ORAs), Vibration Suppression Inserts (VSIs), Neutron Source Assemblies (NSAs) and Neutron Sources. • Design basis thermal and radiological characteristics for the CCs are listed in Table 1-1ee.
No. of Intact Assemblies	≤ 32
No. and Location of Damaged Assemblies	Up to 16 damaged fuel assemblies with balance intact fuel assemblies, or dummy assemblies are authorized for storage in 32PTH1 DSC. Damaged fuel assemblies are to be placed in the center 16 locations as shown in Figures 1-26 through 1-28. The DSC basket cells which store damaged fuel assemblies are provided with top and bottom end caps to assure retrievability.
Maximum Assembly plus CC Weight	1715 lbs

Table 1-1aa
PWR Fuel Specification for the Fuel to be Stored in the NUHOMS®-32PTH1 DSC
(Concluded)

THERMAL/RADIOLOGICAL PARAMETERS:	
Allowable Heat Load Zoning Configurations for each 32PTH1 DSC	Per Figure 1-26 or Figure 1-27 or Figure 1-28.
Burnup, Enrichment, and Minimum Cooling Time for Configuration 1	Per Table 1-5a for Zone 1 fuel, Per Table 1-5d and Table 1-5e for Zone 5 fuel, and Per Table 1-5f for Zone 6 fuel.
Burnup, Enrichment, and Minimum Cooling Time for Configuration 2	Per Table 1-5c for Zone 4 and Zone 3 fuel.
Burnup, Enrichment, and Minimum Cooling Time for Configuration 3	Per Table 1-5b for Zone 2 fuel.
Maximum Assembly Average Initial Fuel Enrichment	5.0 wt. % U-235
Maximum Decay Heat Limits for Zones 1, 2, 3, 4, 5 and 6 Fuel	Per Figure 1-26 or Figure 1-27 or Figure 1-28.
Decay Heat per DSC	≤ 40.8 kW for 32PTH1-S, 32PTH1-M and 32PTH1-L DSCs (Type 1 Basket)
	≤ 31.2 kW for 32PTH1-S, 32PTH1-M and 32PTH1-L DSCs (Type 2 Basket)
Maximum Boron Loading	Per Table 1-1cc or Table 1-1dd

Table 1-1bb
PWR Fuel Assembly Design Characteristics for the NUHOMS®-32PTH1 DSC

Assembly Class		B&W 15x15	WE 17x17	CE 15x15	WE 15x15	CE 14x14	WE 14x14	CE 16x16
Max Unirradiated Length (in)(1)	32PTH1-S	165.75	165.75	165.75	165.75	165.75	165.75	165.75
	32PTH1-M	171.93	171.93	171.93	171.93	171.93	171.93	171.93
	32PTH1-L	178.3	178.3	178.3	178.3	178.3	178.3	178.3
Fissile Material		UO_2	UO_2	UO_2	UO_2	UO_2	UO_2	UO_2
Maximum MTU/Assembly(2)		0.49	0.49	0.49	0.49	0.49	0.49	0.49
Maximum Number of Fuel Rods		208	264	216	204	176	179	236
Maximum Number of Guide/ Instrument Tubes		17	25	9	21	5	17	5

Notes:
(1) Maximum Assembly + Control Component Length (unirradiated)
(2) The maximum MTU/assembly is based on the shielding analysis. The listed value is higher than the actual.

Table 1-1cc
Maximum Assembly Average Initial Enrichment v/s Neutron Poison Requirements for 32PTH1 DSC (Intact Fuel)

Fuel Assembly Class	Maximum Assembly Average Initial Enrichment (wt. % U-235) as a Function of Soluble Boron Concentration and Basket Type (Fixed Poison Loading)					
	Minimum Soluble Boron (ppm)	Basket Type				
		1A or 2A	1B or 2B	1C or 2C	1D or 2D	1E or 2E
WE 17x17 Assembly Class[4]	2000	3.40	3.80	3.90	4.10	4.30
	2300	3.70	4.00	4.20	4.40	4.70
	2400	3.70	4.10	4.30	4.50	4.80
	2500	3.80	4.20	4.40	4.60	4.90
	2800	4.00	4.50	4.70	5.00	5.00
	3000	4.20	4.60	4.80	5.00	5.00
CE 16x16 Assembly Class[5]	2000	3.90	4.30	4.50	4.80	5.00
	2300	4.10	4.60	4.80	5.00	5.00
	2400	4.20	4.70	4.90	5.00	5.00
	2500	4.30	4.80	5.00	5.00	5.00
	2800	4.60	5.00	5.00	5.00	5.00
	3000	4.70	5.00	5.00	5.00	5.00
BW 15x15 Assembly Class[5]	2000	3.30	3.60	3.80	4.00	4.20
	2300	3.50	3.90	4.10	4.30	4.60
	2400	3.60	4.00	4.20	4.40	4.70
	2500	3.70	4.10	4.30	4.50	4.80
	2800	3.90	4.30	4.50	4.80	5.00
	3000	4.10	4.50	4.70	5.00	5.00
CE 15x15 Assembly Class[5]	2000	3.50	3.90	4.00	4.20	4.40
	2300	3.80	4.10	4.30	4.60	4.80
	2400	3.90	4.30	4.40	4.70	4.90
	2500	3.90	4.35	4.50	4.80	5.00
	2800	4.20	4.60	4.80	5.00	5.00
	3000	4.30	4.80	5.00	5.00	5.00

Table 1-1cc
Maximum Assembly Average Initial Enrichment v/s Neutron Poison Requirements for 32PTH1 DSC (Intact Fuel)
(Concluded)

Fuel Assembly Class	Maximum Assembly Average Initial Enrichment (wt. % U-235) as a Function of Soluble Boron Concentration and Basket Type (Fixed Poison Loading)					
	Minimum Soluble Boron (ppm)	Basket Type				
		1A or 2A	1B or 2B	1C or 2C	1D or 2D	1E or 2E
WE 15x15 Assembly Class(5)	2000	3.50	3.80	3.90	4.20	4.40
	2300	3.70	4.10	4.20	4.50	4.80
	2400	3.80	4.20	4.40	4.60	4.90
	2500	3.90	4.30	4.50	4.70	5.00
	2800	4.10	4.50	4.70	5.00	5.00
	3000	4.20	4.70	4.90	5.00	5.00
CE 14x14 Assembly Class(6)	2000	3.90	4.40	4.60	4.90	5.00
	2300	4.20	4.70	5.00	5.00	5.00
	2400	4.30	4.80	5.00	5.00	5.00
	2500	4.40	5.00	5.00	5.00	5.00
	2800	4.60	5.00	5.00	5.00	5.00
	3000	4.80	5.00	5.00	5.00	5.00
WE 14x14 Assembly Class(7)	2000	4.20	4.70	4.90	5.00	5.00
	2300	4.50	5.00	5.00	5.00	5.00
	2400	4.60	5.00	5.00	5.00	5.00
	2500	4.70	5.00	5.00	5.00	5.00
	2800	5.00	5.00	5.00	5.00	5.00
	3000	5.00	5.00	5.00	5.00	5.00

Notes:

(1) Not used.
(2) Not used.
(3) Not used.
(4) Reduce Enrichment by 0.05 wt. % U-235 for assemblies with CCs that extend into the active fuel region.
(5) Reduce Enrichment by 0.10 wt. % U-235 for assemblies with CCs that extend into the active fuel region.
(6) Reduce Enrichment by 0.25 wt. % U-235 for assemblies with CCs that extend into the active fuel region.
(7) No reduction in Enrichment required for assemblies with CCs that extend into the active fuel region.

Table 1-1dd
Maximum Assembly Average Initial Enrichment v/s Neutron Poison Requirements for 32PTH1 DSC (Damaged Fuel)

Fuel Assembly Class	Maximum Assembly Average Initial Enrichment (wt. % U-235) as a Function of Soluble Boron Concentration and Basket Type (Fixed Poison Loading)					
	Minimum Soluble Boron (ppm)	Basket Type				
		1A or 2A	1B or 2B	1C or 2C	1D or 2D	1E or 2E
WE 17x17 Assembly Class (without CCs)	2000	3.40	3.70	3.80	4.05	4.25
	2300	3.60	3.95	4.10	4.35	4.65
	2400	3.70	4.05	4.20	4.45	4.75
	2500	3.75	4.15	4.30	4.55	4.85
	2800	4.00	4.40	4.60	4.85	5.00
	3000	4.15	4.55	4.75	5.00	5.00
WE 17x17 Assembly Class (with CCs)	2000	3.35	3.65	3.75	4.00	4.20
	2300	3.55	3.90	4.05	4.30	4.55
	2400	3.65	4.00	4.15	4.40	4.70
	2500	3.70	4.10	4.25	4.50	4.75
	2800	3.95	4.35	4.55	4.80	5.00
	3000	4.10	4.50	4.70	5.00	5.00
WE 16x16 Assembly Class (without CCs)	2000	3.65	4.05	4.20	4.50	4.75
	2300	3.90	4.30	4.50	4.80	5.00
	2400	4.00	4.40	4.60	4.90	5.00
	2500	4.05	4.50	4.70	5.00	5.00
	2800	4.30	4.80	5.00	5.00	5.00
	3000	4.50	4.95	5.00	5.00	5.00
WE 16x16 Assembly Class (with CCs)	2000	3.60	3.95	4.10	4.40	4.65
	2300	3.80	4.20	4.40	4.70	4.90
	2400	3.90	4.30	4.50	4.80	5.00
	2500	4.00	4.40	4.60	4.80	5.00
	2800	4.20	4.70	4.90	5.00	5.00
	3000	4.40	4.85	5.00	5.00	5.00
BW 15x15 Assembly Class (without CCs)	2000	3.30	3.60	3.75	3.95	4.20
	2300	3.50	3.90	4.05	4.30	4.50
	2400	3.60	4.00	4.15	4.40	4.65
	2500	3.65	4.05	4.20	4.50	4.75
	2800	3.90	4.30	4.50	4.75	5.00
	3000	4.05	4.45	4.65	5.00	5.00

Table 1-1dd
Maximum Assembly Average Initial Enrichment v/s Neutron Poison Requirements for 32PTH1 DSC (Damaged Fuel)
(continued)

Fuel Assembly Class	Maximum Assembly Average Initial Enrichment (wt. % U-235) as a Function of Soluble Boron Concentration and Basket Type (Fixed Poison Loading)					
	Minimum Soluble Boron (ppm)	Basket Type				
		1A or 2A	1B or 2B	1C or 2C	1D or 2D	1E or 2E
BW 15x15 Assembly Class (with CCs)	2000	3.20	3.50	3.65	3.90	4.10
	2300	3.40	3.80	3.95	4.20	4.40
	2400	3.50	3.90	4.05	4.30	4.55
	2500	3.60	4.00	4.15	4.40	4.65
	2800	3.80	4.20	4.40	4.65	4.90
	3000	3.95	4.40	4.55	4.90	5.00
CE 15x15 Assembly Class (without CCs)	2000	3.35	3.70	3.80	4.05	4.25
	2300	3.60	3.95	4.10	4.30	4.60
	2400	3.65	4.05	4.20	4.45	4.70
	2500	3.75	4.15	4.30	4.55	4.80
	2800	4.00	4.40	4.60	4.85	5.00
	3000	4.15	4.55	4.75	5.00	5.00
CE 15x15 Assembly Class (with CCs)	2000	3.30	3.65	3.80	4.00	4.20
	2300	3.55	3.90	4.05	4.30	4.55
	2400	3.65	4.00	4.15	4.45	4.65
	2500	3.70	4.10	4.25	4.50	4.80
	2800	3.95	4.35	4.55	4.80	5.00
	3000	4.10	4.55	4.70	5.00	5.00
WE 15x15 Assembly Class (without CCs)	2000	3.40	3.75	3.90	4.15	4.30
	2300	3.65	4.00	4.20	4.45	4.70
	2400	3.75	4.10	4.30	4.55	4.80
	2500	3.80	4.20	4.40	4.65	4.90
	2800	4.05	4.45	4.60	4.90	5.00
	3000	4.20	4.60	4.80	5.00	5.00

Table 1-1dd
Maximum Assembly Average Initial Enrichment v/s Neutron Poison Requirements for 32PTH1 DSC (Damaged Fuel)
(Concluded)

Fuel Assembly Class	Maximum Assembly Average Initial Enrichment (wt. % U-235) as a Function of Soluble Boron Concentration and Basket Type (Fixed Poison Loading)					
	Minimum Soluble Boron (ppm)	Basket Type				
		1A or 2A	1B or 2B	1C or 2C	1D or 2D	1E or 2E
WE 15x15 Assembly Class (with CCs)	2000	3.35	3.65	3.80	4.00	4.20
	2300	3.55	3.90	4.10	4.35	4.60
	2400	3.65	4.00	4.20	4.45	4.70
	2500	3.70	4.10	4.30	4.55	4.80
	2800	3.95	4.35	4.50	4.80	5.00
	3000	4.10	4.50	4.70	5.00	5.00
CE 14x14 Assembly Class (without CCs)	2000	3.70	4.10	4.30	4.60	4.85
	2300	3.95	4.40	4.60	4.95	5.00
	2400	4.05	4.50	4.70	5.00	5.00
	2500	4.15	4.60	4.80	5.00	5.00
	2800	4.40	4.90	5.00	5.00	5.00
	3000	4.55	5.00	5.00	5.00	5.00
CE 14x14 Assembly Class (with CCs)	2000	3.55	3.95	4.10	4.35	4.60
	2300	3.80	4.20	4.40	4.70	4.90
	2400	3.9	4.30	4.50	4.80	5.00
	2500	4.00	4.40	4.60	4.90	5.00
	2800	4.20	4.65	4.90	5.00	5.00
	3000	4.35	4.85	5.00	5.00	5.00
WE 14x14 Assembly Class (without CCs)	2000	3.75	4.15	4.30	4.60	4.85
	2300	3.95	4.45	4.65	5.00	5.00
	2400	4.05	4.55	4.75	5.00	5.00
	2500	4.15	4.65	4.85	5.00	5.00
	2800	4.40	4.90	5.00	5.00	5.00
	3000	4.60	5.00	5.00	5.00	5.00
WE 14x14 Assembly Class (with CCs)	2000	3.70	4.10	4.20	4.50	4.75
	2300	3.90	4.40	4.60	4.90	5.00
	2400	4.00	4.50	4.65	5.00	5.00
	2500	4.10	4.55	4.80	5.00	5.00
	2800	4.30	4.80	5.00	5.00	5.00
	3000	4.50	5.00	5.00	5.00	5.00

Table 1-1ee
Thermal and Radiological Characteristics for Control Components Stored in the NUHOMS®-32PT and NUHOMS®-32PTH1 DSCs

Parameter	BPRAs, NSAs, CRAs, RCCAs, VSIs, Neutron Sources, and APSRAs	TPAs and ORAs
Maximum Gamma Source (γ/sec/*Assembly*)	*3.90*E+*13*	*4.19*E+12
Decay Heat (Watts/*Assembly*)	*8*	*8*

Table 1-1ff
B10 Specification for the NUHOMS®-32PTH1 Poison Plates

32PTH1 DSC Basket Type	Minimum B10 Areal Density for Boral® (mg/cm^2)	Minimum B10 Areal Density for B-Al[(1)] (mg/cm^2)
1A or 2A	9.0	7.0
1B or 2B	19.0	15.0
1C or 2C	25.0	20.0
1D or 2D	N/A	32.0
1E or 2E	N/A	50.0

Note:
(1) B-Al = Metal Matrix Composites and Borated Aluminum Alloys.

Table 1-2a
PWR Fuel Qualification Table for the Standardized NUHOMS®-24P DSC (Fuel Without BPRAs)
(Minimum required years of cooling time after reactor core discharge)

Burnup (GWd/MTU)	Initial Enrichment (wt. % U-235)																				
	2.0	2.1	2.2	2.3	2.4	2.5	2.6	2.7	2.8	2.9	3.0	3.1	3.2	3.3	3.4	3.5	3.6	3.7	3.8	3.9	4.0
10	a	a	a	a	a	a	a	a	a	a	a	a	a	a	a	a	a	a	a	a	a
15	5	5	a	a	a	a	a	a	a	a	a	a	a	a	a	a	a	a	a	a	a
20	5	5	5	5	5	a	a	a	a	a	a	a	a	a	a	a	a	a	a	a	a
25		5	5	5	5	5	5	5	5	a	a	a	a	a	a	a	a	a	a	a	a
28				5	5	5	5	5	5	5	5	5	a	a	a	a	a	a	a	a	a
30						5	5	5	5	5	5	5	5	a	a	a	a	a	a	a	a
32							5	5	5	5	5	5	5	5	5	a	a	a	a	a	a
34								6	5	5	5	5	5	5	5	5	5	a	a	a	a
36									6	6	6	6	5	5	5	5	5	5	5	a	a
38											7	6	6	6	6	6	6	6	5	5	5
40				Not Acceptable, or Not Analyzed								8	8	8	7	6	6	6	6	6	6
41												9	9	9	8	8	8	8	8	8	8
42													10	9	9	9	9	9	9	8	8
43													10	10	10	10	10	9	9	9	9
44														11	11	11	11	10	10	10	10
45														12	12	11	11	11	11	11	11

a) Minimum Cooling Time 5 years, and Minimum 2350 ppm soluble boron required in the DSC cavity water during loading or unloading.

Notes:

- Use burnup and enrichment to lookup minimum cooling time in years. Licensee is responsible for ensuring that uncertainties in fuel enrichment and burnup are correctly accounted for during fuel qualification.
- Round burnup UP to next higher entry, round enrichments DOWN to next lower entry.
- Fuel with an initial enrichment less than 2.0 wt. % U-235 must be qualified for storage using the alternate nuclear parameters specified in Table 1-1a. Fuel with an initial enrichment greater than 4.0 wt. % U-235 is unacceptable for storage.
- Fuel with a burnup greater than 45 GWd/MTU is unacceptable for storage.
- Example: An assembly with an initial enrichment of 3.65 wt. % U-235 and a burnup of 42.5 GWd/MTU is acceptable for storage after a ten-year cooling time as defined at the intersection of 3.6 wt. % U-235 (rounding down) and 43 GWd/MTU (rounding up) on the qualification table.

Table 1-2b
BWR Fuel Qualification Table for the Standardized NUHOMS®-52B DSC
(Minimum required years of cooling time after reactor core discharge)

Burnup (GWd/MTU)	Initial Enrichment (wt. % U-235)																				
	2.0	2.1	2.2	2.3	2.4	2.5	2.6	2.7	2.8	2.9	3.0	3.1	3.2	3.3	3.4	3.5	3.6	3.7	3.8	3.9	4.0
15	3	3	3	3	3	3	3	3	3	3	3	3	3	3	3	3	3	3	3	3	3
20	5	5	5	5	5	5	5	5	5	5	5	5	5	5	5	5	5	5	5	5	5
25	5	5	5	5	5	5	5	5	5	5	5	5	5	5	5	5	5	5	5	5	5
30				5	5	5	5	5	5	5	5	5	5	5	5	5	5	5	5	5	5
32					6	6	6	5	5	5	5	5	5	5	5	5	5	5	5	5	5
34						8	8	8	8	8	8	8	8	7	6	6	6	6	6	6	6
35							10	10	10	10	9	8	8	8	8	8	8	8	6	6	6
36							11	11	11	11	11	10	10	10	10	10	10	9	8	8	8
37								13	13	12	12	12	12	11	11	11	11	11	10	10	10
38								15	14	14	14	13	13	13	13	12	12	12	12	12	11
39			Not Acceptable or Not Analyzed					18	17	17	16	16	16	15	14	14	14	14	13	13	13
40									21	21	20	20	19	18	17	17	16	16	16	16	15
42										22	22	22	21	21	20	20	20	19	18	17	17
44										24	24	23	23	23	22	22	21	21	21	20	20
45											25	24	24	23	23	23	22	22	22	21	21

Notes:

- Use burnup and enrichment to lookup minimum cooling time in years. Licensee is responsible for ensuring that uncertainties in fuel enrichment and burnup are correctly accounted for during fuel qualification.
- Round burnup UP to next higher entry, round enrichments DOWN to next lower entry.
- Fuel with an initial enrichment less than 2.0 wt. % U-235 must be qualified for storage using the alternate nuclear parameters specified in Table 1-1b. Fuel with an initial enrichment greater than 4.0 wt. % U-235 is unacceptable for storage.
- Fuel with a burnup greater than 45 GWd/MTU is unacceptable for storage. Fuel with a burnup less than 15 GWd/MTU is acceptable after three years cooling time provided the physical parameters from Table 1-1b have been met.
- Example: An assembly with an initial enrichment of 3.05 wt. % U-235 and a burnup of 34.5 GWd/MTU is acceptable for storage after a nine-year cooling time as defined at the intersection of 3.0 wt. % U-235 (rounding down) and 35 GWd/MTU (rounding up) on the qualification table.

Table 1-2c
PWR Fuel Qualification Table for the Standardized NUHOMS®-24P DSC (Fuel With BPRAs)
(Minimum required years of cooling time after reactor core discharge)

Burnup (GWd/MTU)	Initial Enrichment (wt. % U-235)																				
	2.0	2.1	2.2	2.3	2.4	2.5	2.6	2.7	2.8	2.9	3.0	3.1	3.2	3.3	3.4	3.5	3.6	3.7	3.8	3.9	4.0
10	a	a	a	a	a	a	a	a	a	a	a	a	a	a	a	a	a	a	a	a	a
15	5	5	a	a	a	a	a	a	a	a	a	a	a	a	a	a	a	a	a	a	a
20	5	5	5	5	5	a	a	a	a	a	a	a	a	a	a	a	a	a	a	a	a
25		5	5	5	5	5	5	5	5	a	a	a	a	a	a	a	a	a	a	a	a
28				5	5	5	5	5	5	5	5	5	a	a	a	a	a	a	a	a	a
30						6	6	6	5	5	5	5	5	a	a	a	a	a	a	a	a
32							6	6	6	6	6	6	5	5	5	a	a	a	a	a	a
34								7	6	6	6	6	6	6	6	6	6	a	a	a	a
36									8	7	7	7	6	6	6	6	6	6	6	a	a
38											8	8	7	7	7	7	6	6	6	6	6
40				Not Acceptable or Not Analyzed								9	9	8	8	8	7	7	7	7	6
41												10	9	9	9	9	8	8	8	8	8
42													10	10	9	9	9	9	9	9	9
43													11	11	11	10	10	10	10	9	9
44														12	11	11	11	11	10	10	10
45														13	12	12	12	11	11	11	11

a) Minimum Cooling Time 5 years, and Minimum 2350 ppm soluble boron required in the DSC cavity water during loading or unloading.

Notes:

- BPRA Burnup shall not exceed that of a BPRA irradiated in fuel assemblies with a total burnup of 36,000 MWd/MTU.
- Minimum cooling time for a BPRA is 5 years for B&W designs and 10 years for Westinghouse designs, regardless of the required assembly cooling time.
- Use burnup and enrichment to lookup minimum cooling time in years. Licensee is responsible for ensuring that uncertainties in fuel enrichment and burnup are correctly accounted for during fuel qualification.
- Round burnup UP to next higher entry, round enrichments DOWN to next lower entry.
- Fuel with an initial enrichment less than 2.0 wt. % U-235 must be qualified for storage using the alternate nuclear parameters specified in Table 1-1a. Fuel with an initial enrichment greater than 4.0 wt. % U-235 is unacceptable for storage.
- Fuel with a burnup greater than 45 GWd/MTU is unacceptable for storage.
- Example: An assembly with an initial enrichment of 3.65 wt. % U-235 and a burnup of 42.5 GWd/MTU is acceptable for storage after a ten-year cooling time as defined at the intersection of 3.6 wt. % U-235 (rounding down) and 43 GWd/MTU (rounding up) on the qualification table.

Table 1-2d
PWR Fuel Qualification Table for 1.2 kW per Assembly Fuel without BPRAs for the NUHOMS®-32PT DSC
(Minimum required years of cooling time after reactor core discharge)

Burn-Up GWd/MTU	Assembly Average Initial U-235 Enrichment, wt %																																				
	1.1	1.2	1.4	1.6	1.8	1.9	2.0	2.1	2.2	2.3	2.4	2.5	2.6	2.7	2.8	2.9	3.0	3.1	3.2	3.3	3.4	3.5	3.6	3.7	3.8	3.9	4.0	4.1	4.2	4.3	4.4	4.5	4.6	4.7	4.8	4.9	5.0
10	5.0	5.0	5.0	5.0	5.0	5.0	5.0	5.0	5.0	5.0	5.0	5.0	5.0	5.0	5.0	5.0	5.0	5.0	5.0	5.0	5.0	5.0	5.0	5.0	5.0	5.0	5.0	5.0	5.0	5.0	5.0	5.0	5.0	5.0	5.0	5.0	5.0
15	5.0	5.0	5.0	5.0	5.0	5.0	5.0	5.0	5.0	5.0	5.0	5.0	5.0	5.0	5.0	5.0	5.0	5.0	5.0	5.0	5.0	5.0	5.0	5.0	5.0	5.0	5.0	5.0	5.0	5.0	5.0	5.0	5.0	5.0	5.0	5.0	5.0
20	5.0	5.0	5.0	5.0	5.0	5.0	5.0	5.0	5.0	5.0	5.0	5.0	5.0	5.0	5.0	5.0	5.0	5.0	5.0	5.0	5.0	5.0	5.0	5.0	5.0	5.0	5.0	5.0	5.0	5.0	5.0	5.0	5.0	5.0	5.0	5.0	5.0
25	5.0	5.0	5.0	5.0	5.0	5.0	5.0	5.0	5.0	5.0	5.0	5.0	5.0	5.0	5.0	5.0	5.0	5.0	5.0	5.0	5.0	5.0	5.0	5.0	5.0	5.0	5.0	5.0	5.0	5.0	5.0	5.0	5.0	5.0	5.0	5.0	5.0
28	5.0	5.0	5.0	5.0	5.0	5.0	5.0	5.0	5.0	5.0	5.0	5.0	5.0	5.0	5.0	5.0	5.0	5.0	5.0	5.0	5.0	5.0	5.0	5.0	5.0	5.0	5.0	5.0	5.0	5.0	5.0	5.0	5.0	5.0	5.0	5.0	5.0
30	6.0	6.0	5.0	5.0	5.0	5.0	5.0	5.0	5.0	5.0	5.0	5.0	5.0	5.0	5.0	5.0	5.0	5.0	5.0	5.0	5.0	5.0	5.0	5.0	5.0	5.0	5.0	5.0	5.0	5.0	5.0	5.0	5.0	5.0	5.0	5.0	5.0
32	6.0	6.0	6.0	6.0	5.0	5.0	5.0	5.0	5.0	5.0	5.0	5.0	5.0	5.0	5.0	5.0	5.0	5.0	5.0	5.0	5.0	5.0	5.0	5.0	5.0	5.0	5.0	5.0	5.0	5.0	5.0	5.0	5.0	5.0	5.0	5.0	5.0
34	7.0	7.0	6.0	6.0	6.0	6.0	6.0	5.0	5.0	5.0	5.0	5.0	5.0	5.0	5.0	5.0	5.0	5.0	5.0	5.0	5.0	5.0	5.0	5.0	5.0	5.0	5.0	5.0	5.0	5.0	5.0	5.0	5.0	5.0	5.0	5.0	5.0
36	8.0	8.0	7.0	7.0	6.0	6.0	6.0	6.0	6.0	6.0	6.0	5.0	5.0	5.0	5.0	5.0	5.0	5.0	5.0	5.0	5.0	5.0	5.0	5.0	5.0	5.0	5.0	5.0	5.0	5.0	5.0	5.0	5.0	5.0	5.0	5.0	5.0
38	9.0	9.0	8.0	7.0	7.0	7.0	7.0	6.0	6.0	6.0	6.0	6.0	6.0	6.0	6.0	5.0	5.0	5.0	5.0	5.0	5.0	5.0	5.0	5.0	5.0	5.0	5.0	5.0	5.0	5.0	5.0	5.0	5.0	5.0	5.0	5.0	5.0
39	10.0	9.0	8.0	8.0	7.0	7.0	7.0	7.0	7.0	6.0	6.0	6.0	6.0	6.0	6.0	6.0	5.0	5.0	5.0	5.0	5.0	5.0	5.0	5.0	5.0	5.0	5.0	5.0	5.0	5.0	5.0	5.0	5.0	5.0	5.0	5.0	5.0
40	10.0	10.0	9.0	8.0	8.0	8.0	7.0	7.0	7.0	7.0	7.0	6.0	6.0	6.0	6.0	6.0	6.0	5.0	5.0	5.0	5.0	5.0	5.0	5.0	5.0	5.0	5.0	5.0	5.0	5.0	5.0	5.0	5.0	5.0	5.0	5.0	5.0
41	11.0	10.0	10.0	9.0	8.0	8.0	8.0	7.0	7.0	7.0	7.0	7.0	7.0	6.0	6.0	6.0	6.0	5.0	5.0	5.0	5.0	5.0	5.0	5.0	5.0	5.0	5.0	5.0	5.0	5.0	5.0	5.0	5.0	5.0	5.0	5.0	5.0
42	11.5	11.0	10.0	9.0	9.0	8.0	8.0	8.0	8.0	7.0	7.0	7.0	7.0	7.0	7.0	6.0	6.0	6.0	6.0	6.0	6.0	6.0	6.0	6.0	5.0	5.0	5.0	5.0	5.0	5.0	5.0	5.0	5.0	5.0	5.0	5.0	5.0
43	13.0	11.5	10.5	10.0	9.0	9.0	9.0	8.0	8.0	8.0	8.0	7.0	7.0	7.0	7.0	7.0	7.0	6.0	6.0	6.0	6.0	6.0	6.0	6.0	6.0	6.0	6.0	6.0	6.0	6.0	6.0	5.0	5.0	5.0	5.0	5.0	5.0
44	13.5	12.5	11.5	10.5	10.0	9.0	9.0	9.0	8.0	8.0	8.0	8.0	8.0	7.0	7.0	7.0	7.0	7.0	7.0	6.0	6.0	6.0	6.0	6.0	6.0	6.0	6.0	6.0	6.0	6.0	6.0	6.0	6.0	6.0	6.0	6.0	6.0
45	14.5	14.0	12.0	11.0	10.0	10.0	10.0	9.0	9.0	9.0	8.0	8.0	8.0	8.0	7.0	7.0	7.0	7.0	7.0	6.0	6.0	6.0	6.0	6.0	6.0	6.0	6.0	6.0	6.0	6.0	6.0	6.0	6.0	6.0	6.0	6.0	6.0

- Use burnup and enrichment to lookup minimum cooling time in years. Licensee is responsible for ensuring that uncertainties in fuel enrichment and burnup are correctly accounted for during fuel qualification.
- For fuel assemblies reconstituted with up to 10 stainless steel rods, increase the indicated cooling time by 1.5 years. If more than 10 stainless steel rods are present, increase the indicated cooling time by 6 years.
- Round burnup UP to next higher entry, round enrichments DOWN to next lower entry.
- Fuel with an initial enrichment less than 1.1 and greater than 5.0 wt.% U-235 is unacceptable for storage.
- Fuel with a burnup greater than 45 GWd/MTU is unacceptable for storage
- Fuel with a burnup less than 10 GWd/MTU is acceptable for storage after 5-years cooling
- Example: An assembly with an initial enrichment of 3.75 wt. % U-235 and a burnup of 41.5 GWd/MTU is acceptable for storage after a six-year cooling time as defined by 3.7 wt. % U-235 (rounding down) and 42 GWd/MTU (rounding up) on the qualification table.

Table 1-2e
PWR Fuel Qualification Table for 0.87 kW per Assembly Fuel without BPRAs for the NUHOMS®-32PT DSC
(Minimum required years of cooling time after reactor core discharge)

Burn-Up GWd/MTU	Assembly Average Initial U-235 Enrichment, wt %																																					
	1.1	1.2	1.4	1.6	1.8	1.9	2.0	2.1	2.2	2.3	2.4	2.5	2.6	2.7	2.8	2.9	3.0	3.1	3.2	3.3	3.4	3.5	3.6	3.7	3.8	3.9	4.0	4.1	4.2	4.3	4.4	4.5	4.6	4.7	4.8	4.9	5.0
10	5.0	5.0	5.0	5.0	5.0	5.0	5.0	5.0	5.0	5.0	5.0	5.0	5.0	5.0	5.0	5.0	5.0	5.0	5.0	5.0	5.0	5.0	5.0	5.0	5.0	5.0	5.0	5.0	5.0	5.0	5.0	5.0	5.0	5.0	5.0	5.0	5.0
15	5.0	5.0	5.0	5.0	5.0	5.0	5.0	5.0	5.0	5.0	5.0	5.0	5.0	5.0	5.0	5.0	5.0	5.0	5.0	5.0	5.0	5.0	5.0	5.0	5.0	5.0	5.0	5.0	5.0	5.0	5.0	5.0	5.0	5.0	5.0	5.0	5.0
20	5.0	5.0	5.0	5.0	5.0	5.0	5.0	5.0	5.0	5.0	5.0	5.0	5.0	5.0	5.0	5.0	5.0	5.0	5.0	5.0	5.0	5.0	5.0	5.0	5.0	5.0	5.0	5.0	5.0	5.0	5.0	5.0	5.0	5.0	5.0	5.0	5.0
25	5.0	5.0	5.0	5.0	5.0	5.0	5.0	5.0	5.0	5.0	5.0	5.0	5.0	5.0	5.0	5.0	5.0	5.0	5.0	5.0	5.0	5.0	5.0	5.0	5.0	5.0	5.0	5.0	5.0	5.0	5.0	5.0	5.0	5.0	5.0	5.0	5.0
28	5.0	5.0	5.0	5.0	5.0	5.0	5.0	5.0	5.0	5.0	5.0	5.0	5.0	5.0	5.0	5.0	5.0	5.0	5.0	5.0	5.0	5.0	5.0	5.0	5.0	5.0	5.0	5.0	5.0	5.0	5.0	5.0	5.0	5.0	5.0	5.0	5.0
30	6.0	6.0	6.0	5.0	5.0	5.0	5.0	5.0	5.0	5.0	5.0	5.0	5.0	5.0	5.0	5.0	5.0	5.0	5.0	5.0	5.0	5.0	5.0	5.0	5.0	5.0	5.0	5.0	5.0	5.0	5.0	5.0	5.0	5.0	5.0	5.0	5.0
32	6.0	6.0	6.0	6.0	6.0	6.0	6.0	6.0	6.0	6.0	6.0	6.0	6.0	6.0	5.0	5.0	5.0	5.0	5.0	5.0	5.0	5.0	5.0	5.0	5.0	5.0	5.0	5.0	5.0	5.0	5.0	5.0	5.0	5.0	5.0	5.0	5.0
34	7.0	7.0	7.0	6.0	6.0	6.0	6.0	6.0	6.0	6.0	6.0	6.0	6.0	6.0	6.0	6.0	6.0	6.0	6.0	6.0	6.0	6.0	6.0	6.0	6.0	6.0	6.0	6.0	6.0	6.0	6.0	6.0	6.0	6.0	6.0	5.0	5.0
36	9.0	8.0	7.0	7.0	7.0	7.0	7.0	7.0	7.0	7.0	7.0	7.0	7.0	7.0	6.0	6.0	6.0	6.0	6.0	6.0	6.0	6.0	6.0	6.0	6.0	6.0	6.0	6.0	6.0	6.0	6.0	6.0	6.0	6.0	6.0	6.0	6.0
38	9.0	9.0	8.5	8.0	8.0	8.0	8.0	7.0	7.0	7.0	7.0	7.0	7.0	7.0	7.0	7.0	7.0	7.0	7.0	7.0	7.0	7.0	7.0	7.0	7.0	7.0	7.0	7.0	7.0	7.0	7.0	7.0	6.0	6.0	6.0	6.0	6.0
39	10.0	9.0	9.0	8.5	8.0	8.0	8.0	8.0	8.0	8.0	8.0	8.0	8.0	7.0	7.0	7.0	7.0	7.0	7.0	7.0	7.0	7.0	7.0	7.0	7.0	7.0	7.0	7.0	7.0	7.0	7.0	7.0	7.0	7.0	7.0	7.0	7.0
40	10.0	10.0	9.0	9.0	9.0	8.0	8.0	8.0	8.0	8.0	8.0	8.0	8.0	8.0	8.0	8.0	8.0	8.0	8.0	8.0	7.0	7.0	7.0	7.0	7.0	7.0	7.0	7.0	7.0	7.0	7.0	7.0	7.0	7.0	7.0	7.0	7.0
41	11.0	10.5	10.0	9.0	9.0	9.0	9.0	9.0	9.0	9.0	9.0	8.0	8.0	8.0	8.0	8.0	8.0	8.0	8.0	8.0	8.0	8.0	8.0	8.0	8.0	8.0	8.0	8.0	8.0	7.0	7.0	7.0	7.0	7.0	7.0	7.0	7.0
42	12.0	11.5	11.0	10.5	10.0	10.0	9.0	9.0	9.0	9.0	9.0	9.0	9.0	9.0	9.0	9.0	9.0	8.0	8.0	8.0	8.0	8.0	8.0	8.0	8.0	8.0	8.0	8.0	8.0	8.0	8.0	8.0	8.0	8.0	8.0	8.0	8.0
43	13.0	12.0	10.5	10.5	10.5	10.5	10.5	10.5	10.0	10.0	10.0	9.0	9.0	9.0	9.0	9.0	9.0	9.0	9.0	9.0	9.0	9.0	9.0	9.0	9.0	8.0	8.0	8.0	8.0	8.0	8.0	8.0	8.0	8.0	8.0	8.0	8.0
44	13.0	13.0	12.5	12.0	11.5	10.5	10.5	10.5	10.0	10.0	10.0	10.0	9.5	9.5	9.5	9.5	9.5	9.0	9.0	9.0	9.0	9.0	9.0	9.0	9.0	9.0	9.0	9.0	9.0	9.0	9.0	9.0	9.0	9.0	9.0	8.0	8.0
45	14.0	13.5	13.0	12.5	12.5	12.0	12.0	12.0	12.0	10.5	10.5	11.5	10.5	10.5	10.5	10.0	10.0	10.0	9.5	10.0	10.0	10.0	10.0	10.0	10.0	9.0	9.0	9.0	9.0	9.0	9.0	9.0	9.0	9.0	9.0	9.0	9.0

- Use burnup and enrichment to lookup minimum cooling time in years. Licensee is responsible for ensuring that uncertainties in fuel enrichment and burnup are correctly accounted for during fuel qualification.
- For fuel assemblies reconstituted with up to 10 stainless steel rods, increase the indicated cooling time by 1.5 years. If more than 10 stainless steel rods are present, increase the indicated cooling time by 6 years.
- Round burnup UP to next higher entry, round enrichments DOWN to next lower entry.
- Fuel with an initial enrichment less than 1.1 and greater than 5.0 wt.% U-235 is unacceptable for storage.
- Fuel with a burnup greater than 45 GWd/MTU is unacceptable for storage
- Fuel with a burnup less than 10 GWd/MTU is acceptable for storage after 5-years cooling.
- Example: An assembly with an initial enrichment of 3.75 wt. % U-235 and a burnup of 41.5 GWd/MTU is acceptable for storage after a eight-year cooling time as defined by 3.7 wt. % U-235 (rounding down) and 42 GWd/MTU (rounding up) on the qualification table.

Table 1-2f
PWR Fuel Qualification Table for 0.7 kW Fuel without BPRAs per Assembly for the NUHOMS®-32PT DSC
(Minimum required years of cooling time after reactor core discharge)

Burn-Up GWd /MTU	Assembly Average Initial U-235 Enrichment, wt %																																				
	1.1	1.2	1.4	1.6	1.8	1.9	2.0	2.1	2.2	2.3	2.4	2.5	2.6	2.7	2.8	2.9	3.0	3.1	3.2	3.3	3.4	3.5	3.6	3.7	3.8	3.9	4.0	4.1	4.2	4.3	4.4	4.5	4.6	4.7	4.8	4.9	5.0
10	5.0	5.0	5.0	5.0	5.0	5.0	5.0	5.0	5.0	5.0	5.0	5.0	5.0	5.0	5.0	5.0	5.0	5.0	5.0	5.0	5.0	5.0	5.0	5.0	5.0	5.0	5.0	5.0	5.0	5.0	5.0	5.0	5.0	5.0	5.0	5.0	5.0
15	5.0	5.0	5.0	5.0	5.0	5.0	5.0	5.0	5.0	5.0	5.0	5.0	5.0	5.0	5.0	5.0	5.0	5.0	5.0	5.0	5.0	5.0	5.0	5.0	5.0	5.0	5.0	5.0	5.0	5.0	5.0	5.0	5.0	5.0	5.0	5.0	5.0
20	5.0	5.0	5.0	5.0	5.0	5.0	5.0	5.0	5.0	5.0	5.0	5.0	5.0	5.0	5.0	5.0	5.0	5.0	5.0	5.0	5.0	5.0	5.0	5.0	5.0	5.0	5.0	5.0	5.0	5.0	5.0	5.0	5.0	5.0	5.0	5.0	5.0
25	6.0	5.0	5.0	5.0	5.0	5.0	5.0	5.0	5.0	5.0	5.0	5.0	5.0	5.0	5.0	5.0	5.0	5.0	5.0	5.0	5.0	5.0	5.0	5.0	5.0	5.0	5.0	5.0	5.0	5.0	5.0	5.0	5.0	5.0	5.0	5.0	5.0
28	6.0	6.0	6.0	6.0	6.0	6.0	6.0	6.0	6.0	6.0	6.0	6.0	6.0	6.0	6.0	6.0	6.0	6.0	6.0	6.0	6.0	6.0	6.0	6.0	6.0	6.0	5.0	5.0	5.0	5.0	5.0	5.0	5.0	5.0	5.0	5.0	5.0
30	7.0	7.0	7.0	7.0	7.0	7.0	7.0	7.0	6.0	6.0	6.0	6.0	6.0	6.0	6.0	6.0	6.0	6.0	6.0	6.0	6.0	6.0	6.0	6.0	6.0	6.0	6.0	6.0	6.0	6.0	6.0	6.0	6.0	6.0	6.0	6.0	6.0
32	8.0	8.0	8.0	8.0	7.0	7.0	7.0	7.0	7.0	7.0	7.0	7.0	7.0	7.0	7.0	7.0	7.0	7.0	7.0	7.0	7.0	7.0	7.0	7.0	7.0	7.0	7.0	7.0	7.0	7.0	7.0	7.0	7.0	6.0	6.0	6.0	6.0
34	9.0	9.0	9.0	9.0	8.0	8.0	8.0	8.0	8.0	8.0	8.0	8.0	8.0	8.0	8.0	8.0	8.0	8.0	8.0	8.0	8.0	8.0	7.0	7.0	7.0	7.0	7.0	7.0	7.0	7.0	7.0	7.0	7.0	7.0	7.0	7.0	7.0
36	10.5	10.0	10.0	10.0	10.0	9.0	9.0	9.0	9.0	9.0	9.0	9.0	9.0	9.0	9.0	9.0	9.0	9.0	9.0	9.0	8.0	8.0	8.0	8.0	8.0	8.0	8.0	8.0	8.0	8.0	8.0	8.0	8.0	8.0	8.0	8.0	8.0
38	13.0	13.0	11.5	11.5	11.0	11.0	11.0	10.5	10.5	10.5	10.0	10.0	10.0	10.0	10.0	10.0	10.0	10.0	10.0	10.0	10.0	10.0	10.0	9.0	9.0	9.0	9.0	9.0	9.0	9.0	9.0	9.0	9.0	9.0	9.0	9.0	9.0
39	14.0	14.0	13.5	13.0	12.0	11.5	11.5	11.5	11.5	11.5	11.0	11.0	11.0	11.0	11.0	11.0	11.0	11.0	10.0	10.0	10.0	10.0	10.0	10.0	10.0	10.0	10.0	10.0	10.0	10.0	10.0	10.0	10.0	10.0	10.0	10.0	10.0
40	14.5	14.5	14.0	14.0	13.5	13.5	13.0	13.0	12.0	12.0	12.0	12.0	11.5	11.5	11.5	11.5	11.5	11.0	11.0	11.0	11.0	11.0	11.0	11.0	11.0	11.0	11.0	11.0	11.0	11.0	11.0	10.0	10.0	10.0	10.0	10.0	10.0
41	16.5	16.0	15.5	14.5	14.0	14.0	14.0	14.0	14.0	13.5	13.5	13.5	13.5	13.5	12.5	12.0	12.0	12.0	12.0	12.0	12.0	12.0	12.0	12.0	12.0	12.0	12.0	11.0	11.0	11.0	11.0	11.0	11.0	11.0	11.0	11.0	11.0
42	18.0	16.5	16.5	16.0	15.5	15.5	14.5	14.5	14.5	14.5	14.0	14.0	14.0	14.0	14.0	14.0	13.5	13.0	13.0	13.0	13.0	13.0	13.0	13.0	13.0	12.0	12.0	12.0	12.0	12.0	12.0	12.0	12.0	12.0	12.0	12.0	12.0
43	18.5	18.0	18.0	16.5	16.5	16.5	16.5	16.0	16.0	16.0	16.0	15.5	15.5	14.5	14.5	14.5	14.5	14.5	14.0	14.0	14.0	14.0	14.0	14.0	14.0	13.0	13.0	13.0	13.0	13.0	13.0	13.0	13.0	13.0	13.0	13.0	13.0
44	20.0	19.0	18.5	18.5	18.0	18.0	18.0	17.5	16.5	16.5	16.5	16.5	16.0	16.0	16.0	16.0	16.0	16.0	16.0	15.0	15.0	15.0	15.0	15.0	15.0	15.0	14.0	14.0	14.0	14.0	14.0	14.0	14.0	14.0	14.0	14.0	14.0
45	21.0	21.0	20.0	19.0	19.0	19.0	18.5	18.5	18.0	18.0	18.0	18.0	18.0	18.0	17.5	16.5	16.5	16.5	16.5	16.0	16.0	16.0	16.0	16.0	16.0	16.0	15.0	15.0	15.0	15.0	15.0	15.0	15.0	15.0	15.0	15.0	15.0

- Use burnup and enrichment to lookup minimum cooling time in years. Licensee is responsible for ensuring that uncertainties in fuel enrichment and burnup are correctly accounted for during fuel qualification.
- For fuel assemblies reconstituted with up to 10 stainless steel rods, increase the indicated cooling time by 1.5 years. If more than 10 stainless steel rods are present, increase the indicated cooling time by 6 years.
- Round burnup UP to next higher entry, round enrichments DOWN to next lower entry.
- Fuel with an initial enrichment less than 1.1 and greater than 5.0 wt.% U-235 is unacceptable for storage.
- Fuel with a burnup greater than 45 GWd/MTU is unacceptable for storage
- Fuel with a burnup less than 10 GWd/MTU is acceptable for storage after 5-years cooling.
- Example: An assembly with an initial enrichment of 3.75 wt. % U-235 and a burnup of 41.5 GWd/MTU is acceptable for storage after a thirteen-year cooling time as defined by 3.7 wt. % U-235 (rounding down) and 42 GWd/MTU (rounding up) on the qualification table.

Table 1-2g
PWR Fuel Qualification Table for 0.63 kW per Assembly Fuel without BPRAs for the NUHOMS®-32PT DSC
(Minimum required years of cooling time after reactor core discharge)

Burn-Up GWd /MTU	Assembly Average Initial U-235 Enrichment, wt %																																					
	1.1	1.2	1.4	1.6	1.8	1.9	2.0	2.1	2.2	2.3	2.4	2.5	2.6	2.7	2.8	2.9	3.0	3.1	3.2	3.3	3.4	3.5	3.6	3.7	3.8	3.9	4.0	4.1	4.2	4.3	4.4	4.5	4.6	4.7	4.8	4.9	5.0
10	5.0	5.0	5.0	5.0	5.0	5.0	5.0	5.0	5.0	5.0	5.0	5.0	5.0	5.0	5.0	5.0	5.0	5.0	5.0	5.0	5.0	5.0	5.0	5.0	5.0	5.0	5.0	5.0	5.0	5.0	5.0	5.0	5.0	5.0	5.0	5.0	5.0
15	5.0	5.0	5.0	5.0	5.0	5.0	5.0	5.0	5.0	5.0	5.0	5.0	5.0	5.0	5.0	5.0	5.0	5.0	5.0	5.0	5.0	5.0	5.0	5.0	5.0	5.0	5.0	5.0	5.0	5.0	5.0	5.0	5.0	5.0	5.0	5.0	5.0
20	5.0	5.0	5.0	5.0	5.0	5.0	5.0	5.0	5.0	5.0	5.0	5.0	5.0	5.0	5.0	5.0	5.0	5.0	5.0	5.0	5.0	5.0	5.0	5.0	5.0	5.0	5.0	5.0	5.0	5.0	5.0	5.0	5.0	5.0	5.0	5.0	5.0
25	6.5	6.5	6.5	6.0	6.0	6.0	6.0	6.0	6.0	6.0	6.0	6.0	6.0	6.0	6.0	6.0	5.0	5.0	5.0	5.0	5.0	5.0	5.0	5.0	5.0	5.0	5.0	5.0	5.0	5.0	5.0	5.0	5.0	5.0	5.0	5.0	5.0
28	7.0	7.0	7.0	7.0	7.0	7.0	7.0	7.0	7.0	7.0	7.0	7.0	6.0	6.0	6.0	6.0	6.0	6.0	6.0	6.0	6.0	6.0	6.0	6.0	6.0	6.0	6.0	6.0	6.0	6.0	6.0	6.0	6.0	6.0	6.0	6.0	6.0
30	8.0	8.0	8.0	8.0	8.0	8.0	8.0	7.0	7.0	7.0	7.0	7.0	7.0	7.0	7.0	7.0	7.0	7.0	7.0	7.0	7.0	7.0	7.0	7.0	7.0	7.0	7.0	7.0	7.0	7.0	7.0	7.0	7.0	7.0	7.0	7.0	7.0
32	9.5	9.5	9.5	9.5	9.0	9.0	9.0	9.0	8.0	8.0	8.0	8.0	8.0	8.0	8.0	8.0	8.0	8.0	8.0	8.0	8.0	8.0	8.0	8.0	8.0	8.0	8.0	8.0	8.0	8.0	8.0	8.0	8.0	8.0	8.0	8.0	7.0
34	11.0	11.0	11.0	10.5	10.0	10.0	10.0	10.0	10.0	10.0	10.0	9.0	9.0	9.0	9.0	9.0	9.0	9.0	9.0	9.0	9.0	9.0	9.0	9.0	9.0	9.0	9.0	9.0	9.0	9.0	9.0	9.0	9.0	9.0	9.0	9.0	9.0
36	13.5	13.5	13.0	12.0	12.0	11.5	11.5	11.5	11.5	11.0	11.0	11.0	11.0	11.0	11.0	11.0	11.0	11.0	11.0	10.0	10.0	10.0	10.0	10.0	10.0	10.0	10.0	10.0	10.0	10.0	10.0	10.0	10.0	10.0	10.0	10.0	10.0
38	16.5	15.5	14.5	14.5	14.5	13.5	13.5	13.5	13.5	13.0	13.0	13.0	13.0	13.0	13.0	13.0	13.0	12.0	12.0	12.0	12.0	12.0	12.0	12.0	12.0	12.0	12.0	12.0	12.0	12.0	12.0	12.0	12.0	11.0	11.0	11.0	11.0
39	17.5	17.0	16.5	16.0	15.0	15.0	14.5	14.5	14.5	14.5	14.5	14.0	14.0	14.0	14.0	14.0	14.0	13.0	13.0	13.0	13.0	13.0	13.0	13.0	13.0	13.0	13.0	13.0	13.0	13.0	13.0	13.0	13.0	12.0	12.0	12.0	12.0
40	19.0	18.0	18.0	17.0	16.5	16.5	16.5	16.5	16.0	16.0	16.0	16.0	16.0	15.0	15.0	15.0	15.0	15.0	15.0	14.0	14.0	14.0	14.0	14.0	14.0	14.0	14.0	14.0	14.0	14.0	14.0	14.0	14.0	13.0	13.0	13.0	13.0
41	20.5	19.5	19.0	19.0	18.0	18.0	17.5	17.5	17.5	17.0	17.0	17.0	17.0	17.0	16.0	16.0	16.0	16.0	16.0	16.0	16.0	15.0	15.0	15.0	15.0	15.0	15.0	15.0	15.0	15.0	15.0	15.0	15.0	15.0	15.0	15.0	14.0
42	22.0	20.5	20.5	19.5	19.5	19.5	19.0	19.0	18.5	18.5	18.5	18.0	18.0	18.0	18.0	18.0	18.0	17.0	17.0	17.0	17.0	17.0	17.0	16.0	16.0	16.0	16.0	16.0	16.0	16.0	16.0	16.0	16.0	16.0	16.0	16.0	16.0
43	23.0	22.5	22.5	21.5	21.5	21.0	20.0	20.0	19.5	19.5	19.5	19.0	19.0	19.0	19.0	19.0	19.0	19.0	18.0	18.0	18.0	18.0	18.0	18.0	18.0	18.0	18.0	17.0	17.0	17.0	17.0	17.0	17.0	17.0	17.0	17.0	17.0
44	24.5	24.5	23.0	23.0	22.0	22.0	22.0	22.0	21.5	21.5	21.5	21.0	21.0	21.0	20.0	20.0	20.0	20.0	20.0	20.0	19.0	19.0	19.0	19.0	19.0	19.0	19.0	19.0	19.0	19.0	18.0	18.0	18.0	18.0	18.0	18.0	18.0
45	25.5	25.5	25.0	24.0	23.0	23.0	23.0	23.0	23.0	22.5	22.5	22.5	22.0	22.0	22.0	22.0	22.0	21.0	21.0	21.0	21.0	21.0	21.0	20.0	20.0	20.0	20.0	20.0	20.0	20.0	20.0	20.0	20.0	20.0	20.0	19.0	19.0

- Use burnup and enrichment to lookup minimum cooling time in years. Licensee is responsible for ensuring that uncertainties in fuel enrichment and burnup are correctly accounted for during fuel qualification.
- For fuel assemblies reconstituted with up to 10 stainless steel rods, increase the indicated cooling time by 1.5 years. If more than 10 stainless steel rods are present, increase the indicated cooling time by 6 years.
- Round burnup UP to next higher entry, round enrichments DOWN to next lower entry.
- Fuel with an initial enrichment less than 1.1 and greater than 5.0 wt.% U-235 is unacceptable for storage.
- Fuel with a burnup greater than 45 GWd/MTU is unacceptable for storage
- Fuel with a burnup less than 10 GWd/MTU is acceptable for storage after 5-years cooling.
- Example: An assembly with an initial enrichment of 3.75 wt. % U-235 and a burnup of 41.5 GWd/MTU is acceptable for storage after a sixteen-year cooling time as defined by 3.7 wt. % U-235 (rounding down) and 42 GWd/MTU (rounding up) on the qualification table.

Table 1-2h
PWR Fuel Qualification Table for 0.6 kW per Assembly Fuel without BPRAs for the NUHOMS®-32PT DSC
(Minimum required years of cooling time after reactor core discharge)

Burn-Up GWd /MTU	Assembly Average Initial U-235 Enrichment, wt %																																				
	1.1	1.2	1.4	1.6	1.8	1.9	2.0	2.1	2.2	2.3	2.4	2.5	2.6	2.7	2.8	2.9	3.0	3.1	3.2	3.3	3.4	3.5	3.6	3.7	3.8	3.9	4.0	4.1	4.2	4.3	4.4	4.5	4.6	4.7	4.8	4.9	5.0
10	5.0	5.0	5.0	5.0	5.0	5.0	5.0	5.0	5.0	5.0	5.0	5.0	5.0	5.0	5.0	5.0	5.0	5.0	5.0	5.0	5.0	5.0	5.0	5.0	5.0	5.0	5.0	5.0	5.0	5.0	5.0	5.0	5.0	5.0	5.0	5.0	5.0
15	5.0	5.0	5.0	5.0	5.0	5.0	5.0	5.0	5.0	5.0	5.0	5.0	5.0	5.0	5.0	5.0	5.0	5.0	5.0	5.0	5.0	5.0	5.0	5.0	5.0	5.0	5.0	5.0	5.0	5.0	5.0	5.0	5.0	5.0	5.0	5.0	5.0
20	5.0	5.0	5.0	5.0	5.0	5.0	5.0	5.0	5.0	5.0	5.0	5.0	5.0	5.0	5.0	5.0	5.0	5.0	5.0	5.0	5.0	5.0	5.0	5.0	5.0	5.0	5.0	5.0	5.0	5.0	5.0	5.0	5.0	5.0	5.0	5.0	5.0
25	6.5	6.5	6.5	6.0	6.0	6.0	6.0	6.0	6.0	6.0	6.0	6.0	6.0	6.0	6.0	6.0	6.0	6.0	6.0	6.0	6.0	6.0	6.0	6.0	6.0	6.0	6.0	6.0	6.0	6.0	6.0	6.0	6.0	5.0	5.0	5.0	5.0
28	8.0	8.0	7.0	7.0	7.0	7.0	7.0	7.0	7.0	7.0	7.0	7.0	7.0	7.0	7.0	7.0	7.0	7.0	7.0	7.0	7.0	7.0	7.0	7.0	7.0	7.0	7.0	7.0	6.0	6.0	6.0	6.0	6.0	6.0	6.0	6.0	6.0
30	9.0	9.0	9.0	9.0	8.0	8.0	8.0	8.0	8.0	8.0	8.0	8.0	8.0	8.0	8.0	8.0	8.0	8.0	8.0	8.0	8.0	7.0	7.0	7.0	7.0	7.0	7.0	7.0	7.0	7.0	7.0	7.0	7.0	7.0	7.0	7.0	7.0
32	10.5	10.5	9.5	9.5	9.5	9.5	9.5	9.0	9.0	9.0	9.0	9.0	9.0	9.0	9.0	9.0	9.0	9.0	9.0	9.0	9.0	9.0	8.0	8.0	8.0	8.0	8.0	8.0	8.0	8.0	8.0	8.0	8.0	8.0	8.0	8.0	8.0
34	12.0	12.0	12.0	11.5	11.0	11.0	11.0	11.0	11.0	11.0	11.0	10.0	10.0	10.0	10.0	10.0	10.0	10.0	10.0	10.0	10.0	10.0	10.0	10.0	10.0	10.0	10.0	10.0	10.0	10.0	10.0	9.0	9.0	9.0	9.0	9.0	9.0
36	14.5	14.5	14.0	14.0	13.5	13.5	13.0	13.0	13.0	13.0	13.0	12.0	12.0	12.0	12.0	12.0	12.0	12.0	12.0	12.0	12.0	12.0	12.0	11.0	11.0	11.0	11.0	11.0	11.0	11.0	11.0	11.0	11.0	11.0	11.0	11.0	11.0
38	17.5	17.5	16.5	16.5	16.5	16.0	16.0	15.5	15.5	15.0	15.0	15.0	15.0	14.0	14.0	14.0	14.0	14.0	14.0	14.0	14.0	14.0	14.0	14.0	14.0	13.0	13.0	13.0	13.0	13.0	13.0	13.0	13.0	13.0	13.0	13.0	13.0
39	19.5	19.0	18.5	18.0	17.0	16.5	16.5	16.5	16.5	16.0	16.0	16.0	16.0	16.0	16.0	16.0	15.0	15.0	15.0	15.0	15.0	15.0	15.0	15.0	15.0	15.0	15.0	15.0	14.0	14.0	14.0	14.0	14.0	14.0	14.0	14.0	14.0
40	20.5	20.0	20.0	19.0	19.0	18.5	18.5	18.5	18.0	18.0	18.0	17.0	17.0	17.0	17.0	17.0	17.0	17.0	16.0	16.0	16.0	16.0	16.0	16.0	16.0	16.0	16.0	16.0	16.0	16.0	16.0	15.0	15.0	15.0	15.0	15.0	15.0
41	22.5	21.5	21.0	21.0	20.0	20.0	19.5	19.5	19.5	19.0	19.0	19.0	19.0	19.0	18.0	18.0	18.0	18.0	18.0	18.0	18.0	18.0	17.0	17.0	17.0	17.0	17.0	17.0	17.0	17.0	17.0	17.0	17.0	17.0	17.0	17.0	16.0
42	24.0	22.5	22.5	21.5	21.5	21.5	21.0	21.0	21.0	21.0	21.0	20.0	20.0	20.0	20.0	20.0	20.0	19.0	19.0	19.0	19.0	19.0	19.0	19.0	19.0	19.0	18.0	18.0	18.0	18.0	18.0	18.0	18.0	18.0	18.0	18.0	18.0
43	25.0	24.5	24.5	23.5	23.5	23.0	22.0	22.0	22.0	21.5	21.5	21.5	21.0	21.0	21.0	21.0	21.0	21.0	21.0	20.0	20.0	20.0	20.0	20.0	20.0	20.0	20.0	20.0	20.0	20.0	20.0	19.0	19.0	19.0	19.0	19.0	19.0
44	26.5	26.5	25.0	25.0	24.0	24.0	24.0	24.0	23.5	23.5	23.5	23.0	23.0	23.0	23.0	22.0	22.0	22.0	22.0	22.0	22.0	22.0	22.0	21.0	21.0	21.0	21.0	21.0	21.0	21.0	21.0	21.0	21.0	21.0	21.0	20.0	20.0
45	27.5	27.5	27.0	26.0	26.0	25.0	25.0	25.0	25.0	24.5	24.5	24.5	24.0	24.0	24.0	24.0	24.0	24.0	23.0	23.0	23.0	23.0	23.0	23.0	23.0	23.0	23.0	22.0	22.0	22.0	22.0	22.0	22.0	22.0	22.0	22.0	22.0

- Use burnup and enrichment to lookup minimum cooling time in years. Licensee is responsible for ensuring that uncertainties in fuel enrichment and burnup are correctly accounted for during fuel qualification.
- For fuel assemblies reconstituted with up to 10 stainless steel rods, increase the indicated cooling time by 1.5 years. If more than 10 stainless steel rods are present, increase the indicated cooling time by 6 years.
- Round burnup UP to next higher entry, round enrichments DOWN to next lower entry.
- Fuel with an initial enrichment less than 1.1 and greater than 5.0 wt.% U-235 is unacceptable for storage.
- Fuel with a burnup greater than 45 GWd/MTU is unacceptable for storage
- Fuel with a burnup less than 10 GWd/MTU is acceptable for storage after 5-years cooling.
- Example: An assembly with an initial enrichment of 3.75 wt. % U-235 and a burnup of 41.5 GWd/MTU is acceptable for storage after a nineteen-year cooling time as defined by 3.7 wt. % U-235 (rounding down) and 42 GWd/MTU (rounding up) on the qualification table.

Table 1-2i
PWR Fuel Qualification Table for 1.2 kW per Assembly Fuel with BPRAs for the NUHOMS®-32PT DSC
(Minimum required years of cooling time after reactor core discharge)

BU (GWd/MTU)	Initial Enrichment wt % U-235																														
	2.0	2.1	2.2	2.3	2.4	2.5	2.6	2.7	2.8	2.9	3.0	3.1	3.2	3.3	3.4	3.5	3.6	3.7	3.8	3.9	4.0	4.1	4.2	4.3	4.4	4.5	4.6	4.7	4.8	4.9	5.0
10	5	5	5	5	5	5	5	5	5	5	5	5	5	5	5	5	5	5	5	5	5	5	5	5	5	5	5	5	5	5	5
15	5	5	5	5	5	5	5	5	5	5	5	5	5	5	5	5	5	5	5	5	5	5	5	5	5	5	5	5	5	5	5
20	5	5	5	5	5	5	5	5	5	5	5	5	5	5	5	5	5	5	5	5	5	5	5	5	5	5	5	5	5	5	5
25		5	5	5	5	5	5	5	5	5	5	5	5	5	5	5	5	5	5	5	5	5	5	5	5	5	5	5	5	5	5
28				5	5	5	5	5	5	5	5	5	5	5	5	5	5	5	5	5	5	5	5	5	5	5	5	5	5	5	5
30						5	5	5	5	5	5	5	5	5	5	5	5	5	5	5	5	5	5	5	5	5	5	5	5	5	5
32							5	5	5	5	5	5	5	5	5	5	5	5	5	5	5	5	5	5	5	5	5	5	5	5	5
34								5	5	5	5	5	5	5	5	5	5	5	5	5	5	5	5	5	5	5	5	5	5	5	5
36									5	5	5	5	5	5	5	5	5	5	5	5	5	5	5	5	5	5	5	5	5	5	5
38											5	5	5	5	5	5	5	5	5	5	5	5	5	5	5	5	5	5	5	5	5
39			Not Analyzed								5	5	5	5	5	5	5	5	5	5	5	5	5	5	5	5	5	5	5	5	5
40												5	5	5	5	5	5	5	5	5	5	5	5	5	5	5	5	5	5	5	5
41												6	6	5	5	5	5	5	5	5	5	5	5	5	5	5	5	5	5	5	5
42												6	6	6	6	6	6	6	6	5	5	5	5	5	5	5	5	5	5	5	5
43													6	6	6	6	6	6	6	6	6	6	6	6	6	6	6	6	5	5	5
44														6	6	6	6	6	6	6	6	6	6	6	6	6	6	6	6	6	6
45														6	6	6	6	6	6	6	6	6	6	6	6	6	6	6	6	6	6

- Use burnup and enrichment to lookup minimum cooling time in years. Licensee is responsible for ensuring that uncertainties in fuel enrichment and burnup are correctly accounted for during fuel qualification.
- Round burnup UP to next higher entry, round enrichments DOWN to next lower entry.
- Fuel with an initial enrichment less than 2.0 and greater than 5.0 wt.% U-235 is unacceptable for storage.
- Fuel with a burnup greater than 45 GWd/MTU is unacceptable for storage
- Fuel with a burnup less than 10 GWd/MTU is acceptable for storage after 5-years cooling
- Example: An assembly with an initial enrichment of 3.75 wt. % U-235 and a burnup of 41.5 GWd/MTU is acceptable for storage after a six-year cooling time as defined by 3.7 wt. % U-235 (rounding down) and 42 GWd/MTU (rounding up) on the qualification table.

Table 1-2j
PWR Fuel Qualification Table for 0.87 kW per Assembly Fuel with BPRAs for the NUHOMS®-32PT DSC
(Minimum required years of cooling time after reactor core discharge)

BU (GWd/MTU)	Initial Enrichment wt % U-235																														
	2.0	2.1	2.2	2.3	2.4	2.5	2.6	2.7	2.8	2.9	3.0	3.1	3.2	3.3	3.4	3.5	3.6	3.7	3.8	3.9	4.0	4.1	4.2	4.3	4.4	4.5	4.6	4.7	4.8	4.9	5.0
10	5	5	5	5	5	5	5	5	5	5	5	5	5	5	5	5	5	5	5	5	5	5	5	5	5	5	5	5	5	5	5
15	5	5	5	5	5	5	5	5	5	5	5	5	5	5	5	5	5	5	5	5	5	5	5	5	5	5	5	5	5	5	5
20	5	5	5	5	5	5	5	5	5	5	5	5	5	5	5	5	5	5	5	5	5	5	5	5	5	5	5	5	5	5	5
25		5	5	5	5	5	5	5	5	5	5	5	5	5	5	5	5	5	5	5	5	5	5	5	5	5	5	5	5	5	5
28				5	5	5	5	5	5	5	5	5	5	5	5	5	5	5	5	5	5	5	5	5	5	5	5	5	5	5	5
30						5	5	5	5	5	5	5	5	5	5	5	5	5	5	5	5	5	5	5	5	5	5	5	5	5	5
32							6	6	6	6	5	5	5	5	5	5	5	5	5	5	5	5	5	5	5	5	5	5	5	5	5
34								6	6	6	6	6	6	6	6	6	6	6	6	6	6	6	6	6	6	6	6	6	6	6	6
36									7	6	6	6	6	6	6	6	6	6	6	6	6	6	6	6	6	6	6	6	6	6	6
38											7	7	7	7	7	7	7	7	7	7	7	7	7	7	7	7	7	7	7	6	6
39			Not Analyzed								7	7	7	7	7	7	7	7	7	7	7	7	7	7	7	7	7	7	7	7	7
40												8	8	8	8	8	7	7	7	7	7	7	7	7	7	7	7	7	7	7	7
41												8	8	8	8	8	8	8	8	8	8	8	8	8	8	8	8	7	7	7	7
42												9	9	8	8	8	8	8	8	8	8	8	8	8	8	8	8	8	8	8	8
43													9	9	9	9	9	9	9	9	9	9	8	8	8	8	8	8	8	8	8
44														9	9	9	9	9	9	9	9	9	9	9	9	9	9	9	9	9	9
45														10	10	10	10	10	10	10	10	10	9	9	9	9	9	9	9	9	9

- Use burnup and enrichment to lookup minimum cooling time in years. Licensee is responsible for ensuring that uncertainties in fuel enrichment and burnup are correctly accounted for during fuel qualification.
- Round burnup UP to next higher entry, round enrichments DOWN to next lower entry.
- Fuel with an initial enrichment less than 2.0 and greater than 5.0 wt.% U-235 is unacceptable for storage.
- Fuel with a burnup greater than 45 GWd/MTU is unacceptable for storage
- Fuel with a burnup less than 10 GWd/MTU is acceptable for storage after 5-years cooling.
- Example: An assembly with an initial enrichment of 3.75 wt. % U-235 and a burnup of 41.5 GWd/MTU is acceptable for storage after a eight-year cooling time as defined by 3.7 wt. % U-235 (rounding down) and 42 GWd/MTU (rounding up) on the qualification table.

Table 1-2k
PWR Fuel Qualification Table for 0.7 kW per Assembly Fuel with BPRAs for the NUHOMS®-32PT DSC
(Minimum required years of cooling time after reactor core discharge)

BU (GWd/MTU)	Initial Enrichment wt % U-235																														
	2.0	2.1	2.2	2.3	2.4	2.5	2.6	2.7	2.8	2.9	3.0	3.1	3.2	3.3	3.4	3.5	3.6	3.7	3.8	3.9	4.0	4.1	4.2	4.3	4.4	4.5	4.6	4.7	4.8	4.9	5.0
10	5	5	5	5	5	5	5	5	5	5	5	5	5	5	5	5	5	5	5	5	5	5	5	5	5	5	5	5	5	5	5
15	5	5	5	5	5	5	5	5	5	5	5	5	5	5	5	5	5	5	5	5	5	5	5	5	5	5	5	5	5	5	5
20	5	5	5	5	5	5	5	5	5	5	5	5	5	5	5	5	5	5	5	5	5	5	5	5	5	5	5	5	5	5	5
25		5	5	5	5	5	5	5	5	5	5	5	5	5	5	5	5	5	5	5	5	5	5	5	5	5	5	5	5	5	5
28				6	6	6	6	6	6	6	6	6	6	6	6	6	6	6	6	6	6	6	6	6	5	5	5	5	5	5	5
30						6	6	6	6	6	6	6	6	6	6	6	6	6	6	6	6	6	6	6	6	6	6	6	6	6	6
32							7	7	7	7	7	7	7	7	7	7	7	7	7	7	7	7	7	7	7	7	7	7	7	7	7
34								8	8	8	8	8	8	8	8	8	8	8	8	7	7	7	7	7	7	7	7	7	7	7	7
36									9	9	9	9	9	9	9	9	9	9	8	8	8	8	8	8	8	8	8	8	8	8	8
38											10	10	10	10	10	10	10	10	10	10	10	10	9	9	9	9	9	9	9	9	9
39											11	11	11	11	11	11	10	10	10	10	10	10	10	10	10	10	10	10	10	10	10
40			Not Analyzed									12	11	11	11	11	11	11	11	11	11	11	11	11	11	11	11	11	11	11	11
41												13	13	12	12	12	12	12	12	12	12	12	12	12	12	12	12	11	11	11	11
42												14	14	13	13	13	13	13	13	13	13	13	13	13	12	12	12	12	12	12	12
43													15	14	14	14	14	14	14	14	14	14	14	14	13	13	13	13	13	13	13
44														16	15	15	15	15	15	15	15	15	15	15	15	14	14	14	14	14	14
45														17	17	16	16	16	16	16	16	16	16	16	16	16	15	15	15	15	15

- Use burnup and enrichment to lookup minimum cooling time in years. Licensee is responsible for ensuring that uncertainties in fuel enrichment and burnup are correctly accounted for during fuel qualification.
- Round burnup UP to next higher entry, round enrichments DOWN to next lower entry.
- Fuel with an initial enrichment less than 2.0 and greater than 5.0 wt.% U-235 is unacceptable for storage.
- Fuel with a burnup greater than 45 GWd/MTU is unacceptable for storage
- Fuel with a burnup less than 10 GWd/MTU is acceptable for storage after 5-years cooling.
- Example: An assembly with an initial enrichment of 3.75 wt. % U-235 and a burnup of 41.5 GWd/MTU is acceptable for storage after a thirteen-year cooling time as defined by 3.7 wt. % U-235 (rounding down) and 42 GWd/MTU (rounding up) on the qualification table.

Table 1-2l
PWR Fuel Qualification Table for 0.63 kW per Assembly Fuel with BPRAs for the NUHOMS®-32PT DSC
(Minimum required years of cooling time after reactor core discharge)

BU (GWd/MTU)	Initial Enrichment wt % U-235																														
	2.0	2.1	2.2	2.3	2.4	2.5	2.6	2.7	2.8	2.9	3.0	3.1	3.2	3.3	3.4	3.5	3.6	3.7	3.8	3.9	4.0	4.1	4.2	4.3	4.4	4.5	4.6	4.7	4.8	4.9	5.0
10	5	5	5	5	5	5	5	5	5	5	5	5	5	5	5	5	5	5	5	5	5	5	5	5	5	5	5	5	5	5	5
15	5	5	5	5	5	5	5	5	5	5	5	5	5	5	5	5	5	5	5	5	5	5	5	5	5	5	5	5	5	5	5
20	5	5	5	5	5	5	5	5	5	5	5	5	5	5	5	5	5	5	5	5	5	5	5	5	5	5	5	5	5	5	5
25		6	6	6	6	6	6	6	6	6	6	6	6	6	6	6	6	6	6	6	6	6	6	6	6	6	6	6	6	6	6
28				7	7	7	7	7	7	6	6	6	6	6	6	6	6	6	6	6	6	6	6	6	6	6	6	6	6	6	6
30						7	7	7	7	7	7	7	7	7	7	7	7	7	7	7	7	7	7	7	7	7	7	7	7	7	7
32							8	8	8	8	8	8	8	8	8	8	8	8	8	8	8	8	8	8	8	8	8	8	8	8	8
34								10	10	9	9	9	9	9	9	9	9	9	9	9	9	9	9	9	9	9	9	9	9	9	9
36									11	11	11	11	11	11	11	11	11	11	11	10	10	10	10	10	10	10	10	10	10	10	10
38											13	13	13	13	13	13	12	12	12	12	12	12	12	12	12	12	12	12	12	12	12
39			Not Analyzed								14	14	14	14	14	14	14	13	13	13	13	13	13	13	13	13	13	13	13	13	13
40												15	15	15	15	15	15	15	14	14	14	14	14	14	14	14	14	14	14	14	14
41												16	16	16	16	16	16	16	16	16	16	16	15	15	15	15	15	15	15	15	15
42												18	18	17	17	17	17	17	17	17	17	17	17	17	16	16	16	16	16	16	16
43													19	19	19	19	18	18	18	18	18	18	18	18	18	18	18	18	17	17	17
44														20	20	20	20	20	20	20	19	19	19	19	19	19	19	19	19	19	19
45														22	21	21	21	21	21	21	21	21	21	20	20	20	20	20	20	20	20

- Use burnup and enrichment to lookup minimum cooling time in years. Licensee is responsible for ensuring that uncertainties in fuel enrichment and burnup are correctly accounted for during fuel qualification.
- Round burnup UP to next higher entry, round enrichments DOWN to next lower entry.
- Fuel with an initial enrichment less than 2.0 and greater than 5.0 wt.% U-235 is unacceptable for storage.
- Fuel with a burnup greater than 45 GWd/MTU is unacceptable for storage
- Fuel with a burnup less than 10 GWd/MTU is acceptable for storage after 5-years cooling.
- Example: An assembly with an initial enrichment of 3.75 wt. % U-235 and a burnup of 41.5 GWd/MTU is acceptable for storage after a seventeen-year cooling time as defined by 3.7 wt. % U-235 (rounding down) and 42 GWd/MTU (rounding up) on the qualification table.

Table 1-2m
PWR Fuel Qualification Table for 0.6 kW per Assembly Fuel with BPRAs for the NUHOMS®-32PT DSC
(Minimum required years of cooling time after reactor core discharge)

BU (GWd/MTU)	Initial Enrichment wt % U-235																														
	2.0	2.1	2.2	2.3	2.4	2.5	2.6	2.7	2.8	2.9	3.0	3.1	3.2	3.3	3.4	3.5	3.6	3.7	3.8	3.9	4.0	4.1	4.2	4.3	4.4	4.5	4.6	4.7	4.8	4.9	5.0
10	5	5	5	5	5	5	5	5	5	5	5	5	5	5	5	5	5	5	5	5	5	5	5	5	5	5	5	5	5	5	5
15	5	5	5	5	5	5	5	5	5	5	5	5	5	5	5	5	5	5	5	5	5	5	5	5	5	5	5	5	5	5	5
20	5	5	5	5	5	5	5	5	5	5	5	5	5	5	5	5	5	5	5	5	5	5	5	5	5	5	5	5	5	5	5
25		6	6	6	6	6	6	6	6	6	6	6	6	6	6	6	6	6	6	6	6	6	6	6	6	6	6	6	6	6	6
28				7	7	7	7	7	7	7	7	7	7	7	7	7	7	7	7	7	7	7	7	7	7	7	7	7	7	7	6
30						8	8	8	8	8	8	8	8	8	8	8	8	8	8	8	8	7	7	7	7	7	7	7	7	7	7
32							9	9	9	9	9	9	9	9	9	9	9	9	9	9	9	9	9	9	9	8	8	8	8	8	8
34								11	11	11	10	10	10	10	10	10	10	10	10	10	10	10	10	10	10	10	10	10	10	10	10
36									12	12	12	12	12	12	12	12	12	12	12	12	12	12	12	12	12	12	11	11	11	11	11
38											15	15	14	14	14	14	14	14	14	14	14	14	14	14	14	14	14	14	14	13	13
39											16	16	16	16	16	15	15	15	15	15	15	15	15	15	15	15	15	15	15	15	15
40												17	17	17	17	17	17	17	17	16	16	16	16	16	16	16	16	16	16	16	16
41												19	18	18	18	18	18	18	18	18	18	18	18	17	17	17	17	17	17	17	17
42												20	20	20	20	19	19	19	19	19	19	19	19	19	19	19	19	19	19	19	19
43													21	21	21	21	21	21	21	21	20	20	20	20	20	20	20	20	20	20	20
44														23	22	22	22	22	22	22	22	22	22	22	22	21	21	21	21	21	21
45														24	24	24	24	24	23	23	23	23	23	23	23	23	23	23	23	23	22

Not Analyzed

- Use burnup and enrichment to lookup minimum cooling time in years. Licensee is responsible for ensuring that uncertainties in fuel enrichment and burnup are correctly accounted for during fuel qualification.
- Round burnup UP to next higher entry, round enrichments DOWN to next lower entry.
- Fuel with an initial enrichment less than 2.0 and greater than 5.0 wt.% U-235 is unacceptable for storage.
- Fuel with a burnup greater than 45 GWd/MTU is unacceptable for storage
- Fuel with a burnup less than 10 GWd/MTU is acceptable for storage after 5-years cooling.
- Example: An assembly with an initial enrichment of 3.75 wt. % U-235 and a burnup of 41.5 GWd/MTU is acceptable for storage after a nineteen-year cooling time as defined by 3.7 wt. % U-235 (rounding down) and 42 GWd/MTU (rounding up) on the qualification table.

Table 1-2n

PWR Fuel Qualification Table for Zone 1 with 0.7 kW per Assembly, Fuel with or without BPRAs, for the NUHOMS®-24PHB DSC

(Minimum required years of cooling time after reactor core discharge)

BU (GWd/ MTU)	Assembly Average Initial U-235 Enrichment (wt %)																									
	2.0	2.1	2.2	2.3	2.4	2.5	2.6	2.7	2.8	2.9	3.0	3.1	3.2	3.3	3.4	3.5	3.6	3.7	3.8	3.9	4.0	4.1	4.2	4.3	4.4	4.5
10	5.0	5.0	5.0	5.0	5.0	5.0	5.0	5.0	5.0	5.0	5.0	5.0	5.0	5.0	5.0	5.0	5.0	5.0	5.0	5.0	5.0	5.0	5.0	5.0	5.0	5.0
15	5.0	5.0	5.0	5.0	5.0	5.0	5.0	5.0	5.0	5.0	5.0	5.0	5.0	5.0	5.0	5.0	5.0	5.0	5.0	5.0	5.0	5.0	5.0	5.0	5.0	5.0
20	5.0	5.0	5.0	5.0	5.0	5.0	5.0	5.0	5.0	5.0	5.0	5.0	5.0	5.0	5.0	5.0	5.0	5.0	5.0	5.0	5.0	5.0	5.0	5.0	5.0	5.0
25		5.0	5.0	5.0	5.0	5.0	5.0	5.0	5.0	5.0	5.0	5.0	5.0	5.0	5.0	5.0	5.0	5.0	5.0	5.0	5.0	5.0	5.0	5.0	5.0	5.0
28			5.5	5.5	5.5	5.5	5.5	5.5	5.5	5.5	5.5	5.5	5.5	5.5	5.5	5.5	5.5	5.5	5.5	5.5	5.5	5.5	5.5	5.5	5.5	5.5
30						6.5	6.5	6.0	6.0	6.0	6.0	6.0	6.0	6.0	6.0	6.0	6.0	6.0	6.0	6.0	6.0	6.0	6.0	6.0	6.0	6.0
32							7.0	7.0	7.0	7.0	7.0	7.0	7.0	7.0	6.5	6.5	6.5	6.5	6.5	6.5	6.5	6.5	6.5	6.5	6.5	6.5
34								8.0	8.0	8.0	8.0	7.5	7.5	7.5	7.5	7.5	7.5	7.5	7.5	7.5	7.5	7.5	7.5	7.5	7.5	7.5
36									9.0	9.0	9.0	9.0	9.0	9.0	8.5	8.5	8.5	8.5	8.5	8.5	8.5	8.5	8.5	8.5	8.5	8.5
38											10.5	10.5	10.5	10.0	10.0	10.0	10.0	10.0	10.0	10.0	10.0	10.0	9.5	9.5	9.5	9.5
39											11.5	11.0	11.0	11.0	11.0	11.0	11.0	11.0	10.5	10.5	10.5	10.5	10.5	10.5	10.5	10.5
40											12.0	12.0	12.0	12.0	12.0	12.0	11.5	11.5	11.5	11.5	11.5	11.5	11.5	11.0	11.0	11.0
41											13.0	13.0	13.0	13.0	13.0	13.0	12.5	12.5	12.5	12.5	12.5	12.5	12.5	12.0	12.0	12.0
42											14.5	14.5	14.0	14.0	14.0	14.0	13.5	13.5	13.5	13.5	13.5	13.5	13.5	13.0	13.0	13.0
43			Not Analyzed								15.5	15.5	15.5	15.0	15.0	15.0	15.0	15.0	14.5	14.5	14.5	14.5	14.5	14.5	14.0	14.0
44											17.0	16.5	16.5	16.5	16.5	16.0	16.0	16.0	16.0	16.0	15.5	15.5	15.5	15.5	15.5	15.5
45													18.0	17.5	17.5	17.5	17.5	17.0	17.0	17.0	17.0	17.0	16.5	16.5	16.5	16.5
46													18.8	18.7	18.5	18.5	18.3	18.2	18.1	18.0	17.9	17.8	17.7	17.6	17.5	17.4
47													20.1	20.0	19.9	19.6	19.6	19.5	19.4	19.2	19.1	19.0	18.9	18.8	18.7	18.7
48													21.4	21.3	21.1	21.0	20.8	20.8	20.7	20.5	20.4	20.3	20.2	20.1	20.0	19.9
49													22.7	22.6	22.4	22.3	22.1	22.1	21.9	21.8	21.7	21.6	21.5	21.4	21.3	21.2
50															23.7	23.6	23.5	23.4	23.3	23.2	23.0	22.9	22.8	22.7	22.6	22.5
51															25.0	24.9	24.8	24.6	24.5	24.4	24.3	24.2	24.0	23.9	23.8	23.7
52															26.3	26.2	26.0	25.9	25.8	25.7	25.6	25.4	25.3	25.2	25.2	25.0
53															27.5	27.3	27.2	27.1	27.0	26.9	26.8	26.7	26.5	26.4	26.4	26.2
54															28.8	28.6	28.5	28.3	28.2	28.1	28.0	28.0	27.8	27.7	27.6	27.5
55															29.9	29.8	29.7	29.6	29.5	29.3	29.2	29.1	29.0	28.9	28.8	28.7

- BU = Assembly average burnup
- Use burnup and enrichment to lookup minimum cooling time in years. For fuel assemblies reconstituted with up to 10 stainless steel rods only, if the lookup cooling time is less than 9.0 years then a minimum cooling time of 9.0 years shall be used. Licensee is responsible for ensuring that uncertainties in fuel enrichment and burnup are correctly accounted for during fuel qualification.
- Round burnup UP to next higher entry, round enrichments DOWN to next lower entry.
- Fuel with an initial enrichment greater than 4.5 wt.% U-235 is unacceptable for storage.
- Fuel with a burnup less than 10 GWd/MTU is acceptable for storage after 5-years cooling.
- Example: An assembly with an initial enrichment of 3.75 wt. % U-235 and a burnup of 46.5 GWd/MTU is acceptable for storage after a 19.5 years cooling time as defined by 3.7 wt. % U-235 (rounding down) and 47 GWd/MTU (rounding up) on the qualification table.
- See Figure 1-8 for a description of zones.
- For assemblies fuel reconstituted with Zircaloy clad uranium-oxide rods use the assembly average enrichment to determine the minimum cooling time.

Table 1-2o
PWR Fuel Qualification Table for Zone 2 with 1.0 kW per Assembly, Fuel with or without BPRAs, for the NUHOMS®-24PHB DSC

(Minimum required years of cooling time after reactor core discharge)

BU	Assembly Average Initial U-235 Enrichment (wt %)																									
(GWd/MTU)	2.0	2.1	2.2	2.3	2.4	2.5	2.6	2.7	2.8	2.9	3.0	3.1	3.2	3.3	3.4	3.5	3.6	3.7	3.8	3.9	4.0	4.1	4.2	4.3	4.4	4.5
10	5.0	5.0	5.0	5.0	5.0	5.0	5.0	5.0	5.0	5.0	5.0	5.0	5.0	5.0	5.0	5.0	5.0	5.0	5.0	5.0	5.0	5.0	5.0	5.0	5.0	5.0
15	5.0	5.0	5.0	5.0	5.0	5.0	5.0	5.0	5.0	5.0	5.0	5.0	5.0	5.0	5.0	5.0	5.0	5.0	5.0	5.0	5.0	5.0	5.0	5.0	5.0	5.0
20	5.0	5.0	5.0	5.0	5.0	5.0	5.0	5.0	5.0	5.0	5.0	5.0	5.0	5.0	5.0	5.0	5.0	5.0	5.0	5.0	5.0	5.0	5.0	5.0	5.0	5.0
25		5.0	5.0	5.0	5.0	5.0	5.0	5.0	5.0	5.0	5.0	5.0	5.0	5.0	5.0	5.0	5.0	5.0	5.0	5.0	5.0	5.0	5.0	5.0	5.0	5.0
28			5.0	5.0	5.0	5.0	5.0	5.0	5.0	5.0	5.0	5.0	5.0	5.0	5.0	5.0	5.0	5.0	5.0	5.0	5.0	5.0	5.0	5.0	5.0	5.0
30						5.0	5.0	5.0	5.0	5.0	5.0	5.0	5.0	5.0	5.0	5.0	5.0	5.0	5.0	5.0	5.0	5.0	5.0	5.0	5.0	5.0
32							5.0	5.0	5.0	5.0	5.0	5.0	5.0	5.0	5.0	5.0	5.0	5.0	5.0	5.0	5.0	5.0	5.0	5.0	5.0	5.0
34								5.0	5.0	5.0	5.0	5.0	5.0	5.0	5.0	5.0	5.0	5.0	5.0	5.0	5.0	5.0	5.0	5.0	5.0	5.0
36									5.5	5.5	5.5	5.5	5.5	5.0	5.0	5.0	5.0	5.0	5.0	5.0	5.0	5.0	5.0	5.0	5.0	5.0
38											6.0	5.5	5.5	5.5	5.5	5.5	5.5	5.5	5.5	5.5	5.5	5.5	5.5	5.5	5.5	5.5
39											6.0	6.0	6.0	6.0	6.0	6.0	6.0	6.0	6.0	5.5	5.5	5.5	5.5	5.5	5.5	5.5
40											6.5	6.5	6.0	6.0	6.0	6.0	6.0	6.0	6.0	6.0	6.0	6.0	6.0	6.0	6.0	6.0
41											6.5	6.5	6.5	6.5	6.5	6.5	6.5	6.5	6.5	6.0	6.0	6.0	6.0	6.0	6.0	6.0
42											7.0	7.0	7.0	7.0	6.5	6.5	6.5	6.5	6.5	6.5	6.5	6.5	6.5	6.5	6.5	6.5
43											7.5	7.0	7.0	7.0	7.0	7.0	7.0	7.0	7.0	7.0	7.0	7.0	6.5	6.5	6.5	6.5
44											7.5	7.5	7.5	7.5	7.5	7.5	7.5	7.5	7.0	7.0	7.0	7.0	7.0	7.0	7.0	7.0
45			Not										8.0	8.0	8.0	8.0	7.5	7.5	7.5	7.5	7.5	7.5	7.5	7.5	7.5	7.4
46			Analyzed										8.2	8.1	8.0	8.0	7.9	7.8	7.8	7.7	7.7	7.6	7.6	7.5	7.5	7.4
47													8.7	8.6	8.5	8.4	8.4	8.3	8.2	8.2	8.1	8.0	8.0	7.9	7.9	7.8
48													9.2	9.1	9.0	9.0	8.9	8.8	8.7	8.6	8.6	8.5	8.5	8.4	8.3	8.3
49													9.8	9.7	9.6	9.5	9.4	9.3	9.2	9.2	9.1	9.0	9.0	8.9	8.8	8.7
50															10.2	10.1	10.0	9.9	9.8	9.7	9.6	9.6	9.5	9.4	9.3	9.3
51															10.9	10.8	10.7	10.6	10.5	10.3	10.3	10.2	10.1	10.0	9.9	9.9
52															11.6	11.5	11.3	11.2	11.1	11.0	10.9	10.8	10.7	10.6	10.5	10.5
53															12.4	12.2	12.1	12.0	11.9	11.8	11.6	11.5	11.4	11.3	11.2	11.1
54															13.2	13.1	13.0	12.8	12.7	12.5	12.4	12.3	12.2	12.1	12.0	11.9
55															14.1	13.9	13.8	13.6	13.5	13.4	13.2	13.1	13.0	12.9	12.8	12.6

- BU = Assembly average burnup
- Use burnup and enrichment to lookup minimum cooling time in years. For fuel assemblies reconstituted with up to 10 stainless steel rods only, if the lookup cooling time is less than 9.0 years then a minimum cooling time of 9.0 years shall be used. Licensee is responsible for ensuring that uncertainties in fuel enrichment and burnup are correctly accounted for during fuel qualification.
- Round burnup UP to next higher entry, round enrichments DOWN to next lower entry.
- Fuel with an initial enrichment greater than 4.5 wt.% U-235 is unacceptable for storage.
- Fuel with a burnup less than 10 GWd/MTU is acceptable for storage after 5-years cooling.
- Example: An assembly with an initial enrichment of 3.75 wt. % U-235 and a burnup of 46.5 GWd/MTU is acceptable for storage after a 8.3 years cooling time as defined by 3.7 wt. % U-235 (rounding down) and 47 GWd/MTU (rounding up) on the qualification table.
- See Figure 1-8 for a description of zones.
- For assemblies fuel reconstituted with Zircaloy clad uranium-oxide rods use the assembly average enrichment to determine the minimum cooling time.

Table 1-2p
PWR Fuel Qualification Table for Zone 3 with 1.3 kW per Assembly, Fuel with or without BPRAs, for the NUHOMS®-24PHB DSC

(Minimum required years of cooling time after reactor core discharge)

BU	Assembly Average Initial U-235 Enrichment (wt %)																									
(GWd/MTU)	2.0	2.1	2.2	2.3	2.4	2.5	2.6	2.7	2.8	2.9	3.0	3.1	3.2	3.3	3.4	3.5	3.6	3.7	3.8	3.9	4.0	4.1	4.2	4.3	4.4	4.5
10	5.0	5.0	5.0	5.0	5.0	5.0	5.0	5.0	5.0	5.0	5.0	5.0	5.0	5.0	5.0	5.0	5.0	5.0	5.0	5.0	5.0	5.0	5.0	5.0	5.0	5.0
15	5.0	5.0	5.0	5.0	5.0	5.0	5.0	5.0	5.0	5.0	5.0	5.0	5.0	5.0	5.0	5.0	5.0	5.0	5.0	5.0	5.0	5.0	5.0	5.0	5.0	5.0
20	5.0	5.0	5.0	5.0	5.0	5.0	5.0	5.0	5.0	5.0	5.0	5.0	5.0	5.0	5.0	5.0	5.0	5.0	5.0	5.0	5.0	5.0	5.0	5.0	5.0	5.0
25		5.0	5.0	5.0	5.0	5.0	5.0	5.0	5.0	5.0	5.0	5.0	5.0	5.0	5.0	5.0	5.0	5.0	5.0	5.0	5.0	5.0	5.0	5.0	5.0	5.0
28			5.0	5.0	5.0	5.0	5.0	5.0	5.0	5.0	5.0	5.0	5.0	5.0	5.0	5.0	5.0	5.0	5.0	5.0	5.0	5.0	5.0	5.0	5.0	5.0
30						5.0	5.0	5.0	5.0	5.0	5.0	5.0	5.0	5.0	5.0	5.0	5.0	5.0	5.0	5.0	5.0	5.0	5.0	5.0	5.0	5.0
32							5.0	5.0	5.0	5.0	5.0	5.0	5.0	5.0	5.0	5.0	5.0	5.0	5.0	5.0	5.0	5.0	5.0	5.0	5.0	5.0
34								5.0	5.0	5.0	5.0	5.0	5.0	5.0	5.0	5.0	5.0	5.0	5.0	5.0	5.0	5.0	5.0	5.0	5.0	5.0
36									5.0	5.0	5.0	5.0	5.0	5.0	5.0	5.0	5.0	5.0	5.0	5.0	5.0	5.0	5.0	5.0	5.0	5.0
38											5.5	5.5	5.5	5.5	5.5	5.5	5.5	5.5	5.5	5.5	5.5	5.5	5.5	5.5	5.5	5.5
39											5.5	5.5	5.5	5.5	5.5	5.5	5.5	5.5	5.5	5.5	5.5	5.5	5.5	5.5	5.5	5.5
40											5.5	5.5	5.5	5.5	5.5	5.5	5.5	5.5	5.5	5.5	5.5	5.5	5.5	5.5	5.5	5.5
41											5.5	5.5	5.5	5.5	5.5	5.5	5.5	5.5	5.5	5.5	5.5	5.5	5.5	5.5	5.5	5.5
42											6.0	6.0	6.0	6.0	6.0	6.0	6.0	6.0	6.0	6.0	6.0	6.0	6.0	6.0	6.0	6.0
43											6.0	6.0	6.0	6.0	6.0	6.0	6.0	6.0	6.0	6.0	6.0	6.0	6.0	6.0	6.0	6.0
44			Not								6.0	6.0	6.0	6.0	6.0	6.0	6.0	6.0	6.0	6.0	6.0	6.0	6.0	6.0	6.0	6.0
45													6.0	6.0	6.0	6.0	6.0	6.0	6.0	6.0	6.0	6.0	6.0	6.0	6.0	6.0
46			Analyzed										6.1	6.1	6.1	6.1	6.1	6.1	6.1	6.1	6.1	6.1	6.1	6.1	6.1	6.1
47													6.2	6.2	6.2	6.2	6.2	6.2	6.2	6.2	6.2	6.2	6.2	6.2	6.2	6.2
48													6.3	6.3	6.3	6.3	6.3	6.3	6.3	6.3	6.3	6.3	6.3	6.3	6.3	6.3
49													6.5	6.5	6.5	6.5	6.5	6.5	6.5	6.5	6.5	6.5	6.5	6.5	6.5	6.5
50															6.5	6.5	6.5	6.5	6.5	6.5	6.5	6.5	6.5	6.5	6.5	6.5
51															6.7	6.6	6.6	6.6	6.6	6.6	6.6	6.6	6.6	6.6	6.6	6.6
52															7.0	6.9	6.9	6.8	6.8	6.8	6.8	6.8	6.8	6.8	6.8	6.8
53															7.3	7.2	7.2	7.1	7.1	7.0	6.9	6.9	6.9	6.9	6.9	6.9
54															7.7	7.6	7.5	7.4	7.4	7.3	7.3	7.2	7.1	7.1	7.0	7.0
55															8.0	8.0	7.9	7.8	7.7	7.7	7.6	7.5	7.5	7.4	7.3	7.3

- BU = Assembly average burnup
- Use burnup and enrichment to lookup minimum cooling time in years. For fuel assemblies reconstituted with up to 10 stainless steel rods only, if the lookup cooling time is less than 9.0 years then a minimum cooling time of 9.0 years shall be used. Licensee is responsible for ensuring that uncertainties in fuel enrichment and burnup are correctly accounted for during fuel qualification.
- Round burnup UP to next higher entry, round enrichments DOWN to next lower entry.
- Fuel with an initial enrichment greater than 4.5 wt.% U-235 is unacceptable for storage.
- Fuel with a burnup less than 10 GWd/MTU is acceptable for storage after 5-years cooling.
- Example: An assembly with an initial enrichment of 3.75 wt. % U-235 and a burnup of 46.5 GWd/MTU is acceptable for storage after a 6.2 years cooling time as defined by 3.7 wt. % U-235 (rounding down) and 47 GWd/MTU (rounding up) on the qualification table.
- See Figure 1-8 and 1-9 for a description of zones.
- For fuel assemblies reconstituted with Zircaloy clad uranium-oxide rods use the assembly average enrichment to determine the minimum cooling time.

Table 1-2q
BWR Fuel Qualification Table for NUHOMS®-61BT DSC

(Minimum required years of cooling time after reactor core discharge)

BU (GWd /MTU	Initial Enrichment																														
	1.4	1.5	1.6	1.7	1.8	1.9	2.0	2.1	2.2	2.3	2.4	2.5	2.6	2.7	2.8	2.9	3.0	3.1	3.2	3.3	3.4	3.5	3.6	3.7	3.8	3.9	4.0	4.1	4.2	4.3	4.4
10	4	4	4	4	4	4	4	4	4	4	4	4	4	4	4	4	4	4	4	4	4	4	4	4	4	4	4	4	4	4	4
15	4	4	4	4	4	4	4	4	4	4	4	4	4	4	4	4	4	4	4	4	4	4	4	4	4	4	4	4	4	4	4
20	5	5	4	4	4	4	4	4	4	4	4	4	4	4	4	4	4	4	4	4	4	4	4	4	4	4	4	4	4	4	4
25	5	5	5	5	5	5	5	5	5	5	5	5	5	5	5	5	5	5	5	5	5	5	5	5	5	5	5	5	4	4	4
28	Not Acceptable or Not Analyzed				6	6	6	6	6	6	6	6	6	6	6	6	6	5	5	5	5	5	5	5	5	5	5	5	5	5	5
30					7	7	7	7	7	7	6	6	6	6	6	6	6	6	6	6	6	6	6	6	6	6	6	6	6	6	6
32					8	8	8	8	8	7	7	7	7	7	7	7	7	7	7	7	7	7	6	6	6	6	6	6	6	6	6
34					9	9	9	9	9	9	8	8	8	8	8	8	8	8	8	7	7	7	7	7	7	7	7	7	7	7	7
36					11	11	11	10	10	10	10	10	9	9	9	9	9	9	9	9	8	8	8	8	8	8	8	8	8	8	8
38					14	13	13	12	12	12	12	11	11	11	11	11	10	10	10	10	10	10	9	9	9	9	9	9	9	9	9
39					15	14	14	14	13	13	13	12	12	12	12	11	11	11	11	11	10	10	10	10	10	10	10	9	9	9	9
40					16	16	15	15	15	14	14	14	13	13	13	12	12	12	12	12	11	11	11	11	11	10	10	10	10	10	10

This Table provides an alternate methodology as cross referenced in Table 1-1c and 1-1j for determination of fuel assemblies qualified for storage in NUHOMS®-61BT DSC.

- Use burnup and enrichment to lookup minimum cooling time in years. Licensee is responsible for ensuring that uncertainties in fuel enrichment and burnup are conservatively applied in determination of actual values for these two parameters.
- Round burnup UP to next higher entry, round enrichments DOWN to next lower entry.
- Fuel with an initial enrichment less than 1.4 and greater than 4.4 wt.% U-235 is unacceptable for storage.
- Fuel with a burnup greater than 40 GWd/MTU is unacceptable for storage.
- Fuel with a burnup less than 10 GWd/MTU is acceptable for storage after 4 years cooling.
- Example: An assembly with an initial enrichment of 3.75 wt. % U-235 and a burnup of 39.5 GWd/MTU is acceptable for storage after a eleven-year cooling time as defined by 3.7 wt. % U-235 (rounding down) and 40 GWd/MTU (rounding up) on the qualification table.

Table 1-3a
PWR Fuel Qualification Table for Zone 1 Fuel with 1.7 kW per Assembly for the NUHOMS®-24PTH DSC (Fuel w/o CCs)
(Minimum required years of cooling time after reactor core discharge)

Burn Up, GWD/MTU	Maximum Assembly Average Initial U-235 Enrichment, wt. %																																
	0.7	1.5	2.0	2.1	2.2	2.3	2.4	2.5	2.6	2.7	2.8	2.9	3.0	3.1	3.2	3.3	3.4	3.5	3.6	3.7	3.8	3.9	4.0	4.1	4.2	4.3	4.4	4.5	4.6	4.7	4.8	4.9	5.0
10	3.0	3.0	3.0	3.0	3.0	3.0	3.0	3.0	3.0	3.0	3.0	3.0	3.0	3.0	3.0	3.0	3.0	3.0	3.0	3.0	3.0	3.0	3.0	3.0	3.0	3.0	3.0	3.0	3.0	3.0	3.0	3.0	3.0
15	3.0	3.0	3.0	3.0	3.0	3.0	3.0	3.0	3.0	3.0	3.0	3.0	3.0	3.0	3.0	3.0	3.0	3.0	3.0	3.0	3.0	3.0	3.0	3.0	3.0	3.0	3.0	3.0	3.0	3.0	3.0	3.0	3.0
20	3.0	3.0	3.0	3.0	3.0	3.0	3.0	3.0	3.0	3.0	3.0	3.0	3.0	3.0	3.0	3.0	3.0	3.0	3.0	3.0	3.0	3.0	3.0	3.0	3.0	3.0	3.0	3.0	3.0	3.0	3.0	3.0	3.0
25		3.0	3.0	3.0	3.0	3.0	3.0	3.0	3.0	3.0	3.0	3.0	3.0	3.0	3.0	3.0	3.0	3.0	3.0	3.0	3.0	3.0	3.0	3.0	3.0	3.0	3.0	3.0	3.0	3.0	3.0	3.0	3.0
28		3.0	3.0	3.0	3.0	3.0	3.0	3.0	3.0	3.0	3.0	3.0	3.0	3.0	3.0	3.0	3.0	3.0	3.0	3.0	3.0	3.0	3.0	3.0	3.0	3.0	3.0	3.0	3.0	3.0	3.0	3.0	3.0
30		3.0	3.0	3.0	3.0	3.0	3.0	3.0	3.0	3.0	3.0	3.0	3.0	3.0	3.0	3.0	3.0	3.0	3.0	3.0	3.0	3.0	3.0	3.0	3.0	3.0	3.0	3.0	3.0	3.0	3.0	3.0	3.0
32		3.5	3.0	3.0	3.0	3.0	3.0	3.0	3.0	3.0	3.0	3.0	3.0	3.0	3.0	3.0	3.0	3.0	3.0	3.0	3.0	3.0	3.0	3.0	3.0	3.0	3.0	3.0	3.0	3.0	3.0	3.0	3.0
34		3.5	3.5	3.5	3.5	3.0	3.0	3.0	3.0	3.0	3.0	3.0	3.0	3.0	3.0	3.0	3.0	3.0	3.0	3.0	3.0	3.0	3.0	3.0	3.0	3.0	3.0	3.0	3.0	3.0	3.0	3.0	3.0
36		4.0	3.5	3.5	3.5	3.5	3.5	3.5	3.5	3.5	3.5	3.5	3.5	3.0	3.0	3.0	3.0	3.0	3.0	3.0	3.0	3.0	3.0	3.0	3.0	3.0	3.0	3.0	3.0	3.0	3.0	3.0	3.0
38		4.5	4.0	4.0	3.5	3.5	3.5	3.5	3.5	3.5	3.5	3.5	3.5	3.5	3.5	3.5	3.5	3.5	3.5	3.5	3.5	3.5	3.5	3.5	3.5	3.0	3.0	3.0	3.0	3.0	3.0	3.0	3.0
39		4.5	4.0	4.0	4.0	4.0	4.0	3.5	3.5	3.5	3.5	3.5	3.5	3.5	3.5	3.5	3.5	3.5	3.5	3.5	3.5	3.5	3.5	3.5	3.5	3.5	3.5	3.5	3.5	3.5	3.5	3.5	3.5
40		4.5	4.0	4.0	4.0	4.0	4.0	4.0	4.0	3.5	3.5	3.5	3.5	3.5	3.5	3.5	3.5	3.5	3.5	3.5	3.5	3.5	3.5	3.5	3.5	3.5	3.5	3.5	3.5	3.5	3.5	3.5	3.5
41		5.0	4.5	4.0	4.0	4.0	4.0	4.0	4.0	4.0	4.0	4.0	4.0	4.0	3.5	3.5	3.5	3.5	3.5	3.5	3.5	3.5	3.5	3.5	3.5	3.5	3.5	3.5	3.5	3.5	3.5	3.5	3.5
42										4.0	4.0	4.0	4.0	4.0	4.0	4.0	4.0	4.0	4.0	3.5	3.5	3.5	3.5	3.5	3.5	3.5	3.5	3.5	3.5	3.5	3.5	3.5	3.5
43										4.0	4.0	4.0	4.0	4.0	4.0	4.0	4.0	4.0	4.0	4.0	4.0	4.0	4.0	4.0	4.0	3.5	3.5	3.5	3.5	3.5	3.5	3.5	3.5
44										4.0	4.0	4.0	4.0	4.0	4.0	4.0	4.0	4.0	4.0	4.0	4.0	4.0	4.0	4.0	4.0	4.0	4.0	4.0	4.0	4.0	4.0	4.0	4.0
45										4.5	4.5	4.5	4.5	4.0	4.0	4.0	4.0	4.0	4.0	4.0	4.0	4.0	4.0	4.0	4.0	4.0	4.0	4.0	4.0	4.0	4.0	4.0	4.0
46										4.5	4.5	4.5	4.5	4.5	4.5	4.5	4.5	4.5	4.0	4.0	4.0	4.0	4.0	4.0	4.0	4.0	4.0	4.0	4.0	4.0	4.0	4.0	4.0
47										4.5	4.5	4.5	4.5	4.5	4.5	4.5	4.5	4.5	4.5	4.5	4.5	4.5	4.0	4.0	4.0	4.0	4.0	4.0	4.0	4.0	4.0	4.0	4.0
48										5.0	5.0	4.5	4.5	4.5	4.5	4.5	4.5	4.5	4.5	4.5	4.5	4.5	4.5	4.5	4.5	4.5	4.5	4.5	4.0	4.0	4.0	4.0	4.0
49													5.0	5.0	4.5	4.5	4.5	4.5	4.5	4.5	4.5	4.5	4.5	4.5	4.5	4.5	4.5	4.5	4.5	4.5	4.5	4.5	4.5
50													5.0	5.0	5.0	5.0	5.0	5.0	5.0	4.5	4.5	4.5	4.5	4.5	4.5	4.5	4.5	4.5	4.5	4.5	4.5	4.5	4.5
51													5.0	5.0	5.0	5.0	5.0	5.0	5.0	5.0	5.0	5.0	5.0	4.5	4.5	4.5	4.5	4.5	4.5	4.5	4.5	4.5	4.5
52														5.5	5.0	5.0	5.0	5.0	5.0	5.0	5.0	5.0	5.0	5.0	5.0	5.0	5.0	5.0	4.5	4.5	4.5	4.5	4.5
53														5.5	5.5	5.5	5.5	5.0	5.0	5.0	5.0	5.0	5.0	5.0	5.0	5.0	5.0	5.0	5.0	5.0	5.0	5.0	5.0
54															5.5	5.5	5.5	5.5	5.5	5.5	5.5	5.5	5.0	5.0	5.0	5.0	5.0	5.0	5.0	5.0	5.0	5.0	5.0
55															5.5	5.5	5.5	5.5	5.5	5.5	5.5	5.5	5.5	5.5	5.5	5.5	5.0	5.0	5.0	5.0	5.0	5.0	5.0
56															6.0	6.0	6.0	6.0	5.5	5.5	5.5	5.5	5.5	5.5	5.5	5.5	5.5	5.5	5.5	5.5	5.5	5.5	5.0
57																	6.0	6.0	6.0	6.0	6.0	6.0	5.5	5.5	5.5	5.5	5.5	5.5	5.5	5.5	5.5	5.5	5.5
58																	6.0	6.0	6.0	6.0	6.0	6.0	6.0	6.0	6.0	6.0	6.0	5.5	5.5	5.5	5.5	5.5	5.5
59																	6.5	6.5	6.5	6.5	6.0	6.0	6.0	6.0	6.0	6.0	6.0	6.0	6.0	6.0	6.0	6.0	5.5
60																	6.5	6.5	6.5	6.5	6.5	6.5	6.5	6.5	6.5	6.0	6.0	6.0	6.0	6.0	6.0	6.0	6.0
61																	7.0	7.0	7.0	6.5	6.5	6.5	6.5	6.5	6.5	6.5	6.5	6.5	6.0	6.0	6.0	6.0	6.0
62																	7.0	7.0	7.0	7.0	7.0	7.0	7.0	6.5	6.5	6.5	6.5	6.5	6.5	6.5	6.5	6.5	6.5

Note: If *irradiated* stainless steel rods are present in the *reconstituted* fuel assembly, add an additional year of cooling time.

Note: Page A-71 provides the explanatory notes and limitations regarding the use of this table.

Table 1-3b
PWR Fuel Qualification Table for Zone 2 Fuel with 2.0 kW per Assembly for the NUHOMS®-24PTH DSC (Fuel w/o CCs)

(Minimum required years of cooling time after reactor core discharge)

Burn Up, GWD/MTU	Maximum Assembly Average Initial U-235 Enrichment, wt. %																															
	0.7	1.5	2.0	2.1	2.2	2.3	2.4	2.5	2.6	2.7	2.8	2.9	3.0	3.1	3.2	3.3	3.4	3.5	3.6	3.7	3.8	3.9	4.0	4.1	4.2	4.3	4.4	4.5	4.6	4.7	4.8	4.9	5.0
10	3.0	3.0	3.0	3.0	3.0	3.0	3.0	3.0	3.0	3.0	3.0	3.0	3.0	3.0	3.0	3.0	3.0	3.0	3.0	3.0	3.0	3.0	3.0	3.0	3.0	3.0	3.0	3.0	3.0	3.0	3.0	3.0	3.0
15	3.0	3.0	3.0	3.0	3.0	3.0	3.0	3.0	3.0	3.0	3.0	3.0	3.0	3.0	3.0	3.0	3.0	3.0	3.0	3.0	3.0	3.0	3.0	3.0	3.0	3.0	3.0	3.0	3.0	3.0	3.0	3.0	3.0
20	3.0	3.0	3.0	3.0	3.0	3.0	3.0	3.0	3.0	3.0	3.0	3.0	3.0	3.0	3.0	3.0	3.0	3.0	3.0	3.0	3.0	3.0	3.0	3.0	3.0	3.0	3.0	3.0	3.0	3.0	3.0	3.0	3.0
25		3.0	3.0	3.0	3.0	3.0	3.0	3.0	3.0	3.0	3.0	3.0	3.0	3.0	3.0	3.0	3.0	3.0	3.0	3.0	3.0	3.0	3.0	3.0	3.0	3.0	3.0	3.0	3.0	3.0	3.0	3.0	3.0
28		3.0	3.0	3.0	3.0	3.0	3.0	3.0	3.0	3.0	3.0	3.0	3.0	3.0	3.0	3.0	3.0	3.0	3.0	3.0	3.0	3.0	3.0	3.0	3.0	3.0	3.0	3.0	3.0	3.0	3.0	3.0	3.0
30		3.0	3.0	3.0	3.0	3.0	3.0	3.0	3.0	3.0	3.0	3.0	3.0	3.0	3.0	3.0	3.0	3.0	3.0	3.0	3.0	3.0	3.0	3.0	3.0	3.0	3.0	3.0	3.0	3.0	3.0	3.0	3.0
32		3.0	3.0	3.0	3.0	3.0	3.0	3.0	3.0	3.0	3.0	3.0	3.0	3.0	3.0	3.0	3.0	3.0	3.0	3.0	3.0	3.0	3.0	3.0	3.0	3.0	3.0	3.0	3.0	3.0	3.0	3.0	3.0
34		3.0	3.0	3.0	3.0	3.0	3.0	3.0	3.0	3.0	3.0	3.0	3.0	3.0	3.0	3.0	3.0	3.0	3.0	3.0	3.0	3.0	3.0	3.0	3.0	3.0	3.0	3.0	3.0	3.0	3.0	3.0	3.0
36		3.5	3.0	3.0	3.0	3.0	3.0	3.0	3.0	3.0	3.0	3.0	3.0	3.0	3.0	3.0	3.0	3.0	3.0	3.0	3.0	3.0	3.0	3.0	3.0	3.0	3.0	3.0	3.0	3.0	3.0	3.0	3.0
38		3.5	3.5	3.5	3.0	3.0	3.0	3.0	3.0	3.0	3.0	3.0	3.0	3.0	3.0	3.0	3.0	3.0	3.0	3.0	3.0	3.0	3.0	3.0	3.0	3.0	3.0	3.0	3.0	3.0	3.0	3.0	3.0
39		3.5	3.5	3.5	3.5	3.5	3.5	3.0	3.0	3.0	3.0	3.0	3.0	3.0	3.0	3.0	3.0	3.0	3.0	3.0	3.0	3.0	3.0	3.0	3.0	3.0	3.0	3.0	3.0	3.0	3.0	3.0	3.0
40		4.0	3.5	3.5	3.5	3.5	3.5	3.5	3.5	3.5	3.5	3.0	3.0	3.0	3.0	3.0	3.0	3.0	3.0	3.0	3.0	3.0	3.0	3.0	3.0	3.0	3.0	3.0	3.0	3.0	3.0	3.0	3.0
41		4.0	3.5	3.5	3.5	3.5	3.5	3.5	3.5	3.5	3.5	3.5	3.5	3.5	3.5	3.0	3.0	3.0	3.0	3.0	3.0	3.0	3.0	3.0	3.0	3.0	3.0	3.0	3.0	3.0	3.0	3.0	3.0
42										3.5	3.5	3.5	3.5	3.5	3.5	3.5	3.5	3.5	3.5	3.5	3.0	3.0	3.0	3.0	3.0	3.0	3.0	3.0	3.0	3.0	3.0	3.0
43										3.5	3.5	3.5	3.5	3.5	3.5	3.5	3.5	3.5	3.5	3.5	3.5	3.5	3.5	3.5	3.5	3.5	3.0	3.0	3.0	3.0	3.0	3.0
44										3.5	3.5	3.5	3.5	3.5	3.5	3.5	3.5	3.5	3.5	3.5	3.5	3.5	3.5	3.5	3.5	3.5	3.5	3.5	3.5	3.5	3.5	3.5
45										4.0	3.5	3.5	3.5	3.5	3.5	3.5	3.5	3.5	3.5	3.5	3.5	3.5	3.5	3.5	3.5	3.5	3.5	3.5	3.5	3.5	3.5	3.5
46										4.0	4.0	4.0	4.0	4.0	3.5	3.5	3.5	3.5	3.5	3.5	3.5	3.5	3.5	3.5	3.5	3.5	3.5	3.5	3.5	3.5	3.5	3.5
47										4.0	4.0	4.0	4.0	4.0	4.0	4.0	4.0	4.0	4.0	3.5	3.5	3.5	3.5	3.5	3.5	3.5	3.5	3.5	3.5	3.5	3.5	3.5
48										4.0	4.0	4.0	4.0	4.0	4.0	4.0	4.0	4.0	4.0	4.0	4.0	4.0	4.0	3.5	3.5	3.5	3.5	3.5	3.5	3.5	3.5	3.5
49													4.0	4.0	4.0	4.0	4.0	4.0	4.0	4.0	4.0	4.0	4.0	4.0	4.0	4.0	4.0	4.0	4.0	4.0	3.5	3.5	3.5
50													4.0	4.0	4.0	4.0	4.0	4.0	4.0	4.0	4.0	4.0	4.0	4.0	4.0	4.0	4.0	4.0	4.0	4.0	4.0	4.0	4.0
51													4.5	4.5	4.5	4.5	4.0	4.0	4.0	4.0	4.0	4.0	4.0	4.0	4.0	4.0	4.0	4.0	4.0	4.0	4.0	4.0	4.0
52														4.5	4.5	4.5	4.5	4.5	4.5	4.5	4.0	4.0	4.0	4.0	4.0	4.0	4.0	4.0	4.0	4.0	4.0	4.0	4.0
53														4.5	4.5	4.5	4.5	4.5	4.5	4.5	4.5	4.5	4.5	4.5	4.0	4.0	4.0	4.0	4.0	4.0	4.0	4.0	4.0
54															4.5	4.5	4.5	4.5	4.5	4.5	4.5	4.5	4.5	4.5	4.5	4.5	4.5	4.5	4.5	4.5	4.5	4.0	4.0
55															5.0	5.0	4.5	4.5	4.5	4.5	4.5	4.5	4.5	4.5	4.5	4.5	4.5	4.5	4.5	4.5	4.5	4.5	4.5
56															5.0	5.0	5.0	5.0	5.0	5.0	5.0	5.0	5.0	5.0	5.0	5.0	5.0	5.0	5.0	4.5	4.5	4.5	4.5
57																	5.0	5.0	5.0	5.0	5.0	5.0	5.0	5.0	5.0	5.0	5.0	5.0	5.0	5.0	5.0	5.0	5.0
58																	5.0	5.0	5.0	5.0	5.0	5.0	5.0	5.0	5.0	5.0	5.0	5.0	5.0	5.0	5.0	5.0	5.0
59																	5.5	5.5	5.0	5.0	5.0	5.0	5.0	5.0	5.0	5.0	5.0	5.0	5.0	5.0	5.0	5.0	5.0
60																	6.0	5.5	5.5	5.5	5.5	5.0	5.0	5.0	5.0	5.0	5.0	5.0	5.0	5.0	5.0	5.0	5.0
61																	6.0	5.5	5.5	5.5	5.5	5.5	5.5	5.5	5.5	5.5	5.5	5.5	5.5	5.5	5.5	5.5	5.5
62																	6.0	5.5	5.5	5.5	5.5	5.5	5.5	5.5	5.5	5.5	5.5	5.5	5.5	5.5	5.5	5.5	5.5

Note: If *irradiated* stainless steel rods are present in the *reconstituted* fuel assembly, add an additional year of cooling time.

Note: Page A-71 provides the explanatory notes and limitations regarding the use of this table.

Table 1-3c
PWR Fuel Qualification Table for Zone 3 Fuel with 1.5 kW per Assembly for the NUHOMS®-24PTH DSC (Fuel w/o CCs)
(Minimum required years of cooling time after reactor core discharge)

Burn Up, GWD/MTU	Maximum Assembly Average Initial U-235 Enrichment, wt. %																															
	0.7	1.5	2.0	2.1	2.2	2.3	2.4	2.5	2.6	2.7	2.8	2.9	3.0	3.1	3.2	3.3	3.4	3.5	3.6	3.7	3.8	3.9	4.0	4.1	4.2	4.3	4.4	4.5	4.6	4.7	4.8	4.9	5.0
10	3.0	3.0	3.0	3.0	3.0	3.0	3.0	3.0	3.0	3.0	3.0	3.0	3.0	3.0	3.0	3.0	3.0	3.0	3.0	3.0	3.0	3.0	3.0	3.0	3.0	3.0	3.0	3.0	3.0	3.0	3.0	3.0	3.0
15	3.0	3.0	3.0	3.0	3.0	3.0	3.0	3.0	3.0	3.0	3.0	3.0	3.0	3.0	3.0	3.0	3.0	3.0	3.0	3.0	3.0	3.0	3.0	3.0	3.0	3.0	3.0	3.0	3.0	3.0	3.0	3.0	3.0
20	3.0	3.0	3.0	3.0	3.0	3.0	3.0	3.0	3.0	3.0	3.0	3.0	3.0	3.0	3.0	3.0	3.0	3.0	3.0	3.0	3.0	3.0	3.0	3.0	3.0	3.0	3.0	3.0	3.0	3.0	3.0	3.0	3.0
25		3.0	3.0	3.0	3.0	3.0	3.0	3.0	3.0	3.0	3.0	3.0	3.0	3.0	3.0	3.0	3.0	3.0	3.0	3.0	3.0	3.0	3.0	3.0	3.0	3.0	3.0	3.0	3.0	3.0	3.0	3.0	3.0
28		3.5	3.0	3.0	3.0	3.0	3.0	3.0	3.0	3.0	3.0	3.0	3.0	3.0	3.0	3.0	3.0	3.0	3.0	3.0	3.0	3.0	3.0	3.0	3.0	3.0	3.0	3.0	3.0	3.0	3.0	3.0	3.0
30		3.5	3.5	3.0	3.0	3.0	3.0	3.0	3.0	3.0	3.0	3.0	3.0	3.0	3.0	3.0	3.0	3.0	3.0	3.0	3.0	3.0	3.0	3.0	3.0	3.0	3.0	3.0	3.0	3.0	3.0	3.0	3.0
32		4.0	3.5	3.5	3.5	3.5	3.5	3.5	3.0	3.0	3.0	3.0	3.0	3.0	3.0	3.0	3.0	3.0	3.0	3.0	3.0	3.0	3.0	3.0	3.0	3.0	3.0	3.0	3.0	3.0	3.0	3.0	3.0
34		4.0	4.0	3.5	3.5	3.5	3.5	3.5	3.5	3.5	3.5	3.5	3.5	3.5	3.5	3.5	3.5	3.5	3.5	3.5	3.5	3.0	3.0	3.0	3.0	3.0	3.0	3.0	3.0	3.0	3.0	3.0	3.0
36		4.5	4.0	4.0	4.0	4.0	4.0	4.0	3.5	3.5	3.5	3.5	3.5	3.5	3.5	3.5	3.5	3.5	3.5	3.5	3.5	3.5	3.5	3.5	3.5	3.5	3.5	3.5	3.5	3.5	3.5	3.5	3.5
38		5.0	4.5	4.5	4.0	4.0	4.0	4.0	4.0	4.0	4.0	4.0	4.0	4.0	4.0	4.0	4.0	3.5	3.5	3.5	3.5	3.5	3.5	3.5	3.5	3.5	3.5	3.5	3.5	3.5	3.5	3.5	3.5
39		5.0	4.5	4.5	4.5	4.5	4.0	4.0	4.0	4.0	4.0	4.0	4.0	4.0	4.0	4.0	4.0	4.0	4.0	4.0	4.0	4.0	4.0	3.5	3.5	3.5	3.5	3.5	3.5	3.5	3.5	3.5	3.5
40		5.5	4.5	4.5	4.5	4.5	4.5	4.5	4.5	4.0	4.0	4.0	4.0	4.0	4.0	4.0	4.0	4.0	4.0	4.0	4.0	4.0	4.0	4.0	4.0	4.0	4.0	4.0	4.0	4.0	4.0	4.0	3.5
41		5.5	5.0	5.0	4.5	4.5	4.5	4.5	4.5	4.5	4.5	4.0	4.0	4.0	4.0	4.0	4.0	4.0	4.0	4.0	4.0	4.0	4.0	4.0	4.0	4.0	4.0	4.0	4.0	4.0	4.0	4.0	4.0
42										4.5	4.5	4.5	4.5	4.5	4.5	4.5	4.5	4.0	4.0	4.0	4.0	4.0	4.0	4.0	4.0	4.0	4.0	4.0	4.0	4.0	4.0	4.0	4.0
43										4.5	4.5	4.5	4.5	4.5	4.5	4.5	4.5	4.5	4.5	4.5	4.5	4.5	4.0	4.0	4.0	4.0	4.0	4.0	4.0	4.0	4.0	4.0	4.0
44										5.0	4.5	4.5	4.5	4.5	4.5	4.5	4.5	4.5	4.5	4.5	4.5	4.5	4.5	4.5	4.5	4.5	4.5	4.5	4.5	4.0	4.0	4.0	4.0
45										5.0	5.0	5.0	5.0	5.0	4.5	4.5	4.5	4.5	4.5	4.5	4.5	4.5	4.5	4.5	4.5	4.5	4.5	4.5	4.5	4.5	4.5	4.5	4.5
46										5.0	5.0	5.0	5.0	5.0	5.0	5.0	5.0	5.0	4.5	4.5	4.5	4.5	4.5	4.5	4.5	4.5	4.5	4.5	4.5	4.5	4.5	4.5	4.5
47										5.5	5.5	5.0	5.0	5.0	5.0	5.0	5.0	5.0	5.0	5.0	5.0	5.0	5.0	4.5	4.5	4.5	4.5	4.5	4.5	4.5	4.5	4.5	4.5
48										5.5	5.5	5.5	5.5	5.5	5.0	5.0	5.0	5.0	5.0	5.0	5.0	5.0	5.0	5.0	5.0	5.0	5.0	5.0	5.0	5.0	5.0	4.5	4.5
49													5.5	5.5	5.5	5.5	5.5	5.5	5.0	5.0	5.0	5.0	5.0	5.0	5.0	5.0	5.0	5.0	5.0	5.0	5.0	5.0	5.0
50													5.5	5.5	5.5	5.5	5.5	5.5	5.5	5.5	5.5	5.5	5.5	5.0	5.0	5.0	5.0	5.0	5.0	5.0	5.0	5.0	5.0
51													6.0	6.0	6.0	6.0	5.5	5.5	5.5	5.5	5.5	5.5	5.5	5.5	5.5	5.5	5.5	5.5	5.5	5.5	5.0	5.0	5.0
52														6.0	6.0	6.0	6.0	6.0	6.0	5.5	5.5	5.5	5.5	5.5	5.5	5.5	5.5	5.5	5.5	5.5	5.5	5.5	5.5
53														6.0	6.0	6.0	6.0	6.0	6.0	6.0	6.0	6.0	6.0	6.0	6.0	5.5	5.5	5.5	5.5	5.5	5.5	5.5	5.5
54															6.5	6.5	6.5	6.5	6.0	6.0	6.0	6.0	6.0	6.0	6.0	6.0	6.0	6.0	6.0	6.0	5.5	5.5	5.5
55															6.5	6.5	6.5	6.5	6.5	6.5	6.5	6.5	6.5	6.0	6.0	6.0	6.0	6.0	6.0	6.0	6.0	6.0	6.0
56															7.0	7.0	7.0	6.5	6.5	6.5	6.5	6.5	6.5	6.5	6.5	6.5	6.5	6.5	6.0	6.0	6.0	6.0	6.0
57																	7.0	7.0	7.0	7.0	7.0	7.0	6.5	6.5	6.5	6.5	6.5	6.5	6.5	6.5	6.5	6.5	6.5
58																	7.5	7.5	7.5	7.0	7.0	7.0	7.0	7.0	7.0	7.0	7.0	6.5	6.5	6.5	6.5	6.5	6.5
59																	7.5	7.5	7.5	7.5	7.5	7.5	7.5	7.5	7.0	7.0	7.0	7.0	7.0	7.0	7.0	6.5	7.0
60																	8.0	8.0	8.0	7.5	7.5	7.5	7.5	7.5	7.5	7.5	7.5	7.5	7.0	7.0	7.0	7.0	7.0
61																	8.5	8.0	8.0	8.0	8.0	8.0	8.0	8.0	7.5	7.5	7.5	7.5	7.5	7.5	7.5	7.5	7.5
62																	8.5	8.5	8.5	8.5	8.5	8.5	8.0	8.0	8.0	8.0	8.0	8.0	8.0	7.5	7.5	7.5	7.5

Note: If *irradiated* stainless steel rods are present in the *reconstituted* fuel assembly, add an additional year of cooling time.

Note: Page A-71 provides the explanatory notes and limitations regarding the use of this table.

Table 1-3d
PWR Fuel Qualification Table for Zone 4 Fuel with 1.3 kW per Assembly for the NUHOMS®-24PTH DSC (Fuel w/o CCs)

(Minimum required years of cooling time after reactor core discharge)

Burn Up, GWD/MTU	Maximum Assembly Average Initial U-235 Enrichment, wt. %																																
	0.7	1.5	2.0	2.1	2.2	2.3	2.4	2.5	2.6	2.7	2.8	2.9	3.0	3.1	3.2	3.3	3.4	3.5	3.6	3.7	3.8	3.9	4.0	4.1	4.2	4.3	4.4	4.5	4.6	4.7	4.8	4.9	5.0
10	3.0	3.0	3.0	3.0	3.0	3.0	3.0	3.0	3.0	3.0	3.0	3.0	3.0	3.0	3.0	3.0	3.0	3.0	3.0	3.0	3.0	3.0	3.0	3.0	3.0	3.0	3.0	3.0	3.0	3.0	3.0	3.0	3.0
15	3.0	3.0	3.0	3.0	3.0	3.0	3.0	3.0	3.0	3.0	3.0	3.0	3.0	3.0	3.0	3.0	3.0	3.0	3.0	3.0	3.0	3.0	3.0	3.0	3.0	3.0	3.0	3.0	3.0	3.0	3.0	3.0	3.0
20	3.0	3.0	3.0	3.0	3.0	3.0	3.0	3.0	3.0	3.0	3.0	3.0	3.0	3.0	3.0	3.0	3.0	3.0	3.0	3.0	3.0	3.0	3.0	3.0	3.0	3.0	3.0	3.0	3.0	3.0	3.0	3.0	3.0
25		3.0	3.0	3.0	3.0	3.0	3.0	3.0	3.0	3.0	3.0	3.0	3.0	3.0	3.0	3.0	3.0	3.0	3.0	3.0	3.0	3.0	3.0	3.0	3.0	3.0	3.0	3.0	3.0	3.0	3.0	3.0	3.0
28		3.5	3.5	3.5	3.0	3.0	3.0	3.0	3.0	3.0	3.0	3.0	3.0	3.0	3.0	3.0	3.0	3.0	3.0	3.0	3.0	3.0	3.0	3.0	3.0	3.0	3.0	3.0	3.0	3.0	3.0	3.0	3.0
30		4.0	3.5	3.5	3.5	3.5	3.5	3.5	3.5	3.5	3.5	3.5	3.5	3.5	3.5	3.5	3.0	3.0	3.0	3.0	3.0	3.0	3.0	3.0	3.0	3.0	3.0	3.0	3.0	3.0	3.0	3.0	3.0
32		4.5	4.0	4.0	4.0	3.5	3.5	3.5	3.5	3.5	3.5	3.5	3.5	3.5	3.5	3.5	3.5	3.5	3.5	3.5	3.5	3.5	3.5	3.5	3.5	3.5	3.5	3.5	3.5	3.5	3.5	3.5	3.5
34		4.5	4.0	4.0	4.0	4.0	4.0	4.0	4.0	4.0	4.0	4.0	4.0	4.0	4.0	3.5	3.5	3.5	3.5	3.5	3.5	3.5	3.5	3.5	3.5	3.5	3.5	3.5	3.5	3.5	3.5	3.5	3.5
36		5.0	4.5	4.5	4.5	4.5	4.0	4.0	4.0	4.0	4.0	4.0	4.0	4.0	4.0	4.0	4.0	4.0	4.0	4.0	4.0	4.0	4.0	4.0	4.0	4.0	4.0	4.0	4.0	4.0	4.0	4.0	4.0
38		5.5	5.0	5.0	4.5	4.5	4.5	4.5	4.5	4.5	4.5	4.5	4.5	4.5	4.5	4.5	4.5	4.0	4.0	4.0	4.0	4.0	4.0	4.0	4.0	4.0	4.0	4.0	4.0	4.0	4.0	4.0	4.0
39		6.0	5.0	5.0	5.0	5.0	4.5	4.5	4.5	4.5	4.5	4.5	4.5	4.5	4.5	4.5	4.5	4.5	4.5	4.5	4.5	4.5	4.5	4.5	4.5	4.0	4.0	4.0	4.0	4.0	4.0	4.0	4.0
40		6.0	5.5	5.0	5.0	5.0	5.0	5.0	5.0	5.0	4.5	4.5	4.5	4.5	4.5	4.5	4.5	4.5	4.5	4.5	4.5	4.5	4.5	4.5	4.5	4.5	4.5	4.5	4.5	4.5	4.5	4.5	4.5
41		6.5	5.5	5.5	5.5	5.0	5.0	5.0	5.0	5.0	5.0	5.0	5.0	5.0	5.0	4.5	4.5	4.5	4.5	4.5	4.5	4.5	4.5	4.5	4.5	4.5	4.5	4.5	4.5	4.5	4.5	4.5	4.5
42										5.0	5.0	5.0	5.0	5.0	5.0	5.0	5.0	5.0	5.0	5.0	5.0	5.0	4.5	4.5	4.5	4.5	4.5	4.5	4.5	4.5	4.5	4.5	4.5
43										5.5	5.5	5.0	5.0	5.0	5.0	5.0	5.0	5.0	5.0	5.0	5.0	5.0	5.0	5.0	5.0	5.0	5.0	5.0	5.0	4.5	4.5	4.5	4.5
44										5.5	5.5	5.5	5.5	5.5	5.5	5.5	5.5	5.0	5.0	5.0	5.0	5.0	5.0	5.0	5.0	5.0	5.0	5.0	5.0	5.0	5.0	5.0	5.0
45										5.5	5.5	5.5	5.5	5.5	5.5	5.5	5.5	5.5	5.5	5.5	5.0	5.0	5.0	5.0	5.0	5.0	5.0	5.0	5.0	5.0	5.0	5.0	5.0
46										6.0	6.0	6.0	6.0	6.0	5.5	5.5	5.5	5.5	5.5	5.5	5.5	5.5	5.5	5.5	5.5	5.5	5.5	5.5	5.0	5.0	5.0	5.0	5.0
47										6.0	6.0	6.0	6.0	6.0	6.0	6.0	6.0	6.0	5.5	5.5	5.5	5.5	5.5	5.5	5.5	5.5	5.5	5.5	5.5	5.5	5.5	5.5	5.5
48										6.5	6.5	6.5	6.5	6.0	6.0	6.0	6.0	6.0	6.0	6.0	6.0	6.0	6.0	5.5	5.5	5.5	5.5	5.5	5.5	5.5	5.5	5.5	5.5
49													6.5	6.5	6.5	6.5	6.5	6.5	6.0	6.0	6.0	6.0	6.0	6.0	6.0	6.0	6.0	6.0	6.0	6.0	6.0	6.0	5.5
50													7.0	6.5	6.5	6.5	6.5	6.5	6.5	6.5	6.5	6.5	6.5	6.0	6.0	6.0	6.0	6.0	6.0	6.0	6.0	6.0	6.0
51													7.0	7.0	7.0	7.0	7.0	7.0	6.5	6.5	6.5	6.5	6.5	6.5	6.5	6.5	6.5	6.5	6.5	6.0	6.0	6.0	6.0
52														7.5	7.5	7.0	7.0	7.0	7.0	7.0	7.0	7.0	7.0	6.5	6.5	6.5	6.5	6.5	6.5	6.5	6.5	6.5	6.5
53														7.5	7.5	7.5	7.5	7.5	7.5	7.0	7.0	7.0	7.0	7.0	7.0	7.0	7.0	7.0	7.0	6.5	6.5	6.5	6.5
54															8.0	8.0	8.0	7.5	7.5	7.5	7.5	7.5	7.5	7.5	7.0	7.0	7.0	7.0	7.0	7.0	7.0	7.0	7.0
55															8.5	8.0	8.0	8.0	8.0	8.0	8.0	8.0	7.5	7.5	7.5	7.5	7.5	7.5	7.5	7.5	7.0	7.0	7.0
56															8.5	8.5	8.5	8.5	8.5	8.5	8.0	8.0	8.0	8.0	8.0	8.0	8.0	7.5	7.5	7.5	7.5	7.5	7.5
57																	9.0	9.0	8.5	8.5	8.5	8.5	8.5	8.5	8.5	8.0	8.0	8.0	8.0	8.0	8.0	8.0	8.0
58																	9.5	9.5	9.0	9.0	9.0	9.0	9.0	9.0	8.5	8.5	8.5	8.5	8.5	8.5	8.0	8.0	8.0
59																	10.0	10.0	9.5	9.5	9.5	9.5	9.5	9.0	9.0	9.0	9.0	9.0	9.0	8.5	8.5	8.5	8.5
60																	10.5	10.5	10.0	10.0	10.0	10.0	10.0	9.5	9.5	9.5	9.5	9.5	9.0	9.0	9.0	9.0	9.0
61																	11.0	11.0	11.0	10.5	10.5	10.5	10.5	10.0	10.0	10.0	10.0	10.0	10.0	9.5	9.5	9.5	9.5
62																	11.5	11.5	11.5	11.5	11.0	11.0	11.0	10.5	10.5	10.5	10.5	10.5	10.0	10.0	10.0	10.0	10.0

Note: If irradiated stainless steel rods are present in the reconstituted fuel assembly, add an additional year of cooling time for cooling times less than 10 years.

Note: Page A-71 provides the explanatory notes and limitations regarding the use of this table.

Table 1-3e
PWR Fuel Qualification Table for Zone 1 Fuel with 1.7 kW per Assembly for the NUHOMS®-24PTH DSC (Fuel w/ CCs)
(Minimum required years of cooling time after reactor core discharge)

Burn Up, GWD/ MTU	Maximum Assembly Average Initial U-235 Enrichment, wt. %																																
	0.7	1.5	2.0	2.1	2.2	2.3	2.4	2.5	2.6	2.7	2.8	2.9	3.0	3.1	3.2	3.3	3.4	3.5	3.6	3.7	3.8	3.9	4.0	4.1	4.2	4.3	4.4	4.5	4.6	4.7	4.8	4.9	5.0
10	3.0	3.0	3.0	3.0	3.0	3.0	3.0	3.0	3.0	3.0	3.0	3.0	3.0	3.0	3.0	3.0	3.0	3.0	3.0	3.0	3.0	3.0	3.0	3.0	3.0	3.0	3.0	3.0	3.0	3.0	3.0	3.0	3.0
15	3.0	3.0	3.0	3.0	3.0	3.0	3.0	3.0	3.0	3.0	3.0	3.0	3.0	3.0	3.0	3.0	3.0	3.0	3.0	3.0	3.0	3.0	3.0	3.0	3.0	3.0	3.0	3.0	3.0	3.0	3.0	3.0	3.0
20	3.0	3.0	3.0	3.0	3.0	3.0	3.0	3.0	3.0	3.0	3.0	3.0	3.0	3.0	3.0	3.0	3.0	3.0	3.0	3.0	3.0	3.0	3.0	3.0	3.0	3.0	3.0	3.0	3.0	3.0	3.0	3.0	3.0
25		3.0	3.0	3.0	3.0	3.0	3.0	3.0	3.0	3.0	3.0	3.0	3.0	3.0	3.0	3.0	3.0	3.0	3.0	3.0	3.0	3.0	3.0	3.0	3.0	3.0	3.0	3.0	3.0	3.0	3.0	3.0	3.0
28		3.0	3.0	3.0	3.0	3.0	3.0	3.0	3.0	3.0	3.0	3.0	3.0	3.0	3.0	3.0	3.0	3.0	3.0	3.0	3.0	3.0	3.0	3.0	3.0	3.0	3.0	3.0	3.0	3.0	3.0	3.0	3.0
30		3.0	3.0	3.0	3.0	3.0	3.0	3.0	3.0	3.0	3.0	3.0	3.0	3.0	3.0	3.0	3.0	3.0	3.0	3.0	3.0	3.0	3.0	3.0	3.0	3.0	3.0	3.0	3.0	3.0	3.0	3.0	3.0
32		3.5	3.0	3.0	3.0	3.0	3.0	3.0	3.0	3.0	3.0	3.0	3.0	3.0	3.0	3.0	3.0	3.0	3.0	3.0	3.0	3.0	3.0	3.0	3.0	3.0	3.0	3.0	3.0	3.0	3.0	3.0	3.0
34		3.5	3.5	3.5	3.5	3.0	3.0	3.0	3.0	3.0	3.0	3.0	3.0	3.0	3.0	3.0	3.0	3.0	3.0	3.0	3.0	3.0	3.0	3.0	3.0	3.0	3.0	3.0	3.0	3.0	3.0	3.0	3.0
36		4.0	3.5	3.5	3.5	3.5	3.5	3.5	3.5	3.5	3.5	3.5	3.5	3.0	3.0	3.0	3.0	3.0	3.0	3.0	3.0	3.0	3.0	3.0	3.0	3.0	3.0	3.0	3.0	3.0	3.0	3.0	3.0
38		4.5	4.0	4.0	3.5	3.5	3.5	3.5	3.5	3.5	3.5	3.5	3.5	3.5	3.5	3.5	3.5	3.5	3.5	3.5	3.5	3.5	3.5	3.5	3.5	3.5	3.5	3.0	3.0	3.0	3.0	3.0	3.0
39		4.5	4.0	4.0	4.0	4.0	4.0	3.5	3.5	3.5	3.5	3.5	3.5	3.5	3.5	3.5	3.5	3.5	3.5	3.5	3.5	3.5	3.5	3.5	3.5	3.5	3.5	3.5	3.5	3.5	3.5	3.5	3.5
40		4.5	4.0	4.0	4.0	4.0	4.0	4.0	4.0	3.5	3.5	3.5	3.5	3.5	3.5	3.5	3.5	3.5	3.5	3.5	3.5	3.5	3.5	3.5	3.5	3.5	3.5	3.5	3.5	3.5	3.5	3.5	3.5
41		5.0	4.5	4.0	4.0	4.0	4.0	4.0	4.0	4.0	4.0	4.0	4.0	4.0	4.0	3.5	3.5	3.5	3.5	3.5	3.5	3.5	3.5	3.5	3.5	3.5	3.5	3.5	3.5	3.5	3.5	3.5	3.5
42										4.0	4.0	4.0	4.0	4.0	4.0	4.0	4.0	4.0	4.0	4.0	4.0	3.5	3.5	3.5	3.5	3.5	3.5	3.5	3.5	3.5	3.5	3.5	3.5
43										4.0	4.0	4.0	4.0	4.0	4.0	4.0	4.0	4.0	4.0	4.0	4.0	4.0	4.0	4.0	4.0	4.0	4.0	4.0	3.5	3.5	3.5	3.5	3.5
44										4.0	4.0	4.0	4.0	4.0	4.0	4.0	4.0	4.0	4.0	4.0	4.0	4.0	4.0	4.0	4.0	4.0	4.0	4.0	4.0	4.0	4.0	4.0	4.0
45										4.5	4.5	4.5	4.5	4.0	4.0	4.0	4.0	4.0	4.0	4.0	4.0	4.0	4.0	4.0	4.0	4.0	4.0	4.0	4.0	4.0	4.0	4.0	4.0
46										4.5	4.5	4.5	4.5	4.5	4.5	4.5	4.5	4.5	4.0	4.0	4.0	4.0	4.0	4.0	4.0	4.0	4.0	4.0	4.0	4.0	4.0	4.0	4.0
47										4.5	4.5	4.5	4.5	4.5	4.5	4.5	4.5	4.5	4.5	4.5	4.5	4.5	4.5	4.0	4.0	4.0	4.0	4.0	4.0	4.0	4.0	4.0	4.0
48										5.0	5.0	4.5	4.5	4.5	4.5	4.5	4.5	4.5	4.5	4.5	4.5	4.5	4.5	4.5	4.5	4.5	4.5	4.5	4.5	4.5	4.0	4.0	4.0
49													5.0	5.0	4.5	4.5	4.5	4.5	4.5	4.5	4.5	4.5	4.5	4.5	4.5	4.5	4.5	4.5	4.5	4.5	4.5	4.5	4.5
50													5.0	5.0	5.0	5.0	5.0	5.0	5.0	5.0	4.5	4.5	4.5	4.5	4.5	4.5	4.5	4.5	4.5	4.5	4.5	4.5	4.5
51													5.0	5.0	5.0	5.0	5.0	5.0	5.0	5.0	5.0	5.0	5.0	5.0	5.0	4.5	4.5	4.5	4.5	4.5	4.5	4.5	4.5
52														5.5	5.0	5.0	5.0	5.0	5.0	5.0	5.0	5.0	5.0	5.0	5.0	5.0	5.0	5.0	5.0	5.0	4.5	4.5	4.5
53														5.5	5.5	5.5	5.5	5.5	5.0	5.0	5.0	5.0	5.0	5.0	5.0	5.0	5.0	5.0	5.0	5.0	5.0	5.0	5.0
54															5.5	5.5	5.5	5.5	5.5	5.5	5.5	5.5	5.5	5.0	5.0	5.0	5.0	5.0	5.0	5.0	5.0	5.0	5.0
55															5.5	5.5	5.5	5.5	5.5	5.5	5.5	5.5	5.5	5.5	5.5	5.5	5.5	5.0	5.0	5.0	5.0	5.0	5.0
56															6.0	6.0	6.0	6.0	6.0	5.5	5.5	5.5	5.5	5.5	5.5	5.5	5.5	5.5	5.5	5.5	5.5	5.5	5.5
57																	6.0	6.0	6.0	6.0	6.0	6.0	6.0	5.5	5.5	5.5	5.5	5.5	5.5	5.5	5.5	5.5	5.5
58																	6.5	6.0	6.0	6.0	6.0	6.0	6.0	6.0	6.0	6.0	6.0	6.0	5.5	5.5	5.5	5.5	5.5
59																	6.5	6.5	6.5	6.5	6.5	6.0	6.0	6.0	6.0	6.0	6.0	6.0	6.0	6.0	6.0	6.0	6.0
60																	6.5	6.5	6.5	6.5	6.5	6.5	6.5	6.5	6.5	6.0	6.0	6.0	6.0	6.0	6.0	6.0	6.0
61																	7.0	7.0	7.0	7.0	6.5	6.5	6.5	6.5	6.5	6.5	6.5	6.5	6.5	6.5	6.0	6.0	6.0
62																	7.0	7.0	7.0	7.0	7.0	7.0	7.0	7.0	6.5	6.5	6.5	6.5	6.5	6.5	6.5	6.5	6.5

Note: If *irradiated* stainless steel rods are present in the *reconstituted* fuel assembly, add an additional year of cooling time.

Note: Page A-71 provides the explanatory notes and limitations regarding the use of this table.

Table 1-3f
PWR Fuel Qualification Table for Zone 2 Fuel with 2.0 kW per Assembly for the NUHOMS®-24PTH DSC (Fuel w/ CCs)
(Minimum required years of cooling time after reactor core discharge)

Burn Up, GWD/MTU	Maximum Assembly Average Initial U-235 Enrichment, wt. %																																
	0.7	1.5	2.0	2.1	2.2	2.3	2.4	2.5	2.6	2.7	2.8	2.9	3.0	3.1	3.2	3.3	3.4	3.5	3.6	3.7	3.8	3.9	4.0	4.1	4.2	4.3	4.4	4.5	4.6	4.7	4.8	4.9	5.0
10	3.0	3.0	3.0	3.0	3.0	3.0	3.0	3.0	3.0	3.0	3.0	3.0	3.0	3.0	3.0	3.0	3.0	3.0	3.0	3.0	3.0	3.0	3.0	3.0	3.0	3.0	3.0	3.0	3.0	3.0	3.0	3.0	3.0
15	3.0	3.0	3.0	3.0	3.0	3.0	3.0	3.0	3.0	3.0	3.0	3.0	3.0	3.0	3.0	3.0	3.0	3.0	3.0	3.0	3.0	3.0	3.0	3.0	3.0	3.0	3.0	3.0	3.0	3.0	3.0	3.0	3.0
20	3.0	3.0	3.0	3.0	3.0	3.0	3.0	3.0	3.0	3.0	3.0	3.0	3.0	3.0	3.0	3.0	3.0	3.0	3.0	3.0	3.0	3.0	3.0	3.0	3.0	3.0	3.0	3.0	3.0	3.0	3.0	3.0	3.0
25		3.0	3.0	3.0	3.0	3.0	3.0	3.0	3.0	3.0	3.0	3.0	3.0	3.0	3.0	3.0	3.0	3.0	3.0	3.0	3.0	3.0	3.0	3.0	3.0	3.0	3.0	3.0	3.0	3.0	3.0	3.0	3.0
28		3.0	3.0	3.0	3.0	3.0	3.0	3.0	3.0	3.0	3.0	3.0	3.0	3.0	3.0	3.0	3.0	3.0	3.0	3.0	3.0	3.0	3.0	3.0	3.0	3.0	3.0	3.0	3.0	3.0	3.0	3.0	3.0
30		3.0	3.0	3.0	3.0	3.0	3.0	3.0	3.0	3.0	3.0	3.0	3.0	3.0	3.0	3.0	3.0	3.0	3.0	3.0	3.0	3.0	3.0	3.0	3.0	3.0	3.0	3.0	3.0	3.0	3.0	3.0	3.0
32		3.0	3.0	3.0	3.0	3.0	3.0	3.0	3.0	3.0	3.0	3.0	3.0	3.0	3.0	3.0	3.0	3.0	3.0	3.0	3.0	3.0	3.0	3.0	3.0	3.0	3.0	3.0	3.0	3.0	3.0	3.0	3.0
34		3.0	3.0	3.0	3.0	3.0	3.0	3.0	3.0	3.0	3.0	3.0	3.0	3.0	3.0	3.0	3.0	3.0	3.0	3.0	3.0	3.0	3.0	3.0	3.0	3.0	3.0	3.0	3.0	3.0	3.0	3.0	3.0
36		3.5	3.0	3.0	3.0	3.0	3.0	3.0	3.0	3.0	3.0	3.0	3.0	3.0	3.0	3.0	3.0	3.0	3.0	3.0	3.0	3.0	3.0	3.0	3.0	3.0	3.0	3.0	3.0	3.0	3.0	3.0	3.0
38		3.5	3.5	3.5	3.0	3.0	3.0	3.0	3.0	3.0	3.0	3.0	3.0	3.0	3.0	3.0	3.0	3.0	3.0	3.0	3.0	3.0	3.0	3.0	3.0	3.0	3.0	3.0	3.0	3.0	3.0	3.0	3.0
39		3.5	3.5	3.5	3.5	3.5	3.5	3.0	3.0	3.0	3.0	3.0	3.0	3.0	3.0	3.0	3.0	3.0	3.0	3.0	3.0	3.0	3.0	3.0	3.0	3.0	3.0	3.0	3.0	3.0	3.0	3.0	3.0
40		4.0	3.5	3.5	3.5	3.5	3.5	3.5	3.5	3.5	3.5	3.0	3.0	3.0	3.0	3.0	3.0	3.0	3.0	3.0	3.0	3.0	3.0	3.0	3.0	3.0	3.0	3.0	3.0	3.0	3.0	3.0	3.0
41		4.0	3.5	3.5	3.5	3.5	3.5	3.5	3.5	3.5	3.5	3.5	3.5	3.5	3.5	3.5	3.0	3.0	3.0	3.0	3.0	3.0	3.0	3.0	3.0	3.0	3.0	3.0	3.0	3.0	3.0	3.0	3.0
42										3.5	3.5	3.5	3.5	3.5	3.5	3.5	3.5	3.5	3.5	3.5	3.5	3.0	3.0	3.0	3.0	3.0	3.0	3.0	3.0	3.0	3.0	3.0	3.0
43										3.5	3.5	3.5	3.5	3.5	3.5	3.5	3.5	3.5	3.5	3.5	3.5	3.5	3.5	3.5	3.5	3.5	3.5	3.0	3.0	3.0	3.0	3.0	3.0
44										3.5	3.5	3.5	3.5	3.5	3.5	3.5	3.5	3.5	3.5	3.5	3.5	3.5	3.5	3.5	3.5	3.5	3.5	3.5	3.5	3.5	3.5	3.5	3.5
45										4.0	3.5	3.5	3.5	3.5	3.5	3.5	3.5	3.5	3.5	3.5	3.5	3.5	3.5	3.5	3.5	3.5	3.5	3.5	3.5	3.5	3.5	3.5	3.5
46										4.0	4.0	4.0	4.0	4.0	4.0	3.5	3.5	3.5	3.5	3.5	3.5	3.5	3.5	3.5	3.5	3.5	3.5	3.5	3.5	3.5	3.5	3.5	3.5
47										4.0	4.0	4.0	4.0	4.0	4.0	4.0	4.0	4.0	4.0	4.0	3.5	3.5	3.5	3.5	3.5	3.5	3.5	3.5	3.5	3.5	3.5	3.5	3.5
48										4.0	4.0	4.0	4.0	4.0	4.0	4.0	4.0	4.0	4.0	4.0	4.0	4.0	4.0	4.0	3.5	3.5	3.5	3.5	3.5	3.5	3.5	3.5	3.5
49													4.0	4.0	4.0	4.0	4.0	4.0	4.0	4.0	4.0	4.0	4.0	4.0	4.0	4.0	4.0	4.0	4.0	4.0	4.0	4.0	3.5
50													4.0	4.0	4.0	4.0	4.0	4.0	4.0	4.0	4.0	4.0	4.0	4.0	4.0	4.0	4.0	4.0	4.0	4.0	4.0	4.0	4.0
51													4.5	4.5	4.5	4.5	4.5	4.0	4.0	4.0	4.0	4.0	4.0	4.0	4.0	4.0	4.0	4.0	4.0	4.0	4.0	4.0	4.0
52														4.5	4.5	4.5	4.5	4.5	4.5	4.5	4.5	4.5	4.0	4.0	4.0	4.0	4.0	4.0	4.0	4.0	4.0	4.0	4.0
53														4.5	4.5	4.5	4.5	4.5	4.5	4.5	4.5	4.5	4.5	4.5	4.5	4.5	4.0	4.0	4.0	4.0	4.0	4.0	4.0
54															4.5	4.5	4.5	4.5	4.5	4.5	4.5	4.5	4.5	4.5	4.5	4.5	4.5	4.5	4.5	4.5	4.5	4.0	4.0
55															5.0	5.0	4.5	4.5	4.5	4.5	4.5	4.5	4.5	4.5	4.5	4.5	4.5	4.5	4.5	4.5	4.5	4.5	4.5
56															5.0	5.0	5.0	5.0	5.0	5.0	5.0	5.0	5.0	5.0	5.0	5.0	5.0	5.0	5.0	4.5	4.5	4.5	4.5
57																	5.0	5.0	5.0	5.0	5.0	5.0	5.0	5.0	5.0	5.0	5.0	5.0	5.0	5.0	5.0	5.0	5.0
58																	5.0	5.0	5.0	5.0	5.0	5.0	5.0	5.0	5.0	5.0	5.0	5.0	5.0	5.0	5.0	5.0	5.0
59																	5.5	5.5	5.5	5.0	5.0	5.0	5.0	5.0	5.0	5.0	5.0	5.0	5.0	5.0	5.0	5.0	5.0
60																	6.0	5.5	5.5	5.5	5.5	5.5	5.0	5.0	5.0	5.0	5.0	5.0	5.0	5.0	5.0	5.0	5.0
61																	6.0	5.5	5.5	5.5	5.5	5.5	5.5	5.5	5.5	5.5	5.5	5.5	5.5	5.5	5.5	5.5	5.5
62																	6.0	6.0	5.5	5.5	5.5	5.5	5.5	5.5	5.5	5.5	5.5	5.5	5.5	5.5	5.5	5.5	5.5

Note: If *irradiated* stainless steel rods are present in the *reconstituted* fuel assembly, add an additional year of cooling time.

Note: Page A-71 provides the explanatory notes and limitations regarding the use of this table.

Table 1-3g
PWR Fuel Qualification Table for Zone 3 Fuel with 1.5 kW per Assembly for the NUHOMS®-24PTH DSC (Fuel w/ CCs)
(Minimum required years of cooling time after reactor core discharge)

Burn Up, GWD/MTU	Maximum Assembly Average Initial U-235 Enrichment, wt. %																																
	0.7	1.5	2.0	2.1	2.2	2.3	2.4	2.5	2.6	2.7	2.8	2.9	3.0	3.1	3.2	3.3	3.4	3.5	3.6	3.7	3.8	3.9	4.0	4.1	4.2	4.3	4.4	4.5	4.6	4.7	4.8	4.9	5.0
10	3.0	3.0	3.0	3.0	3.0	3.0	3.0	3.0	3.0	3.0	3.0	3.0	3.0	3.0	3.0	3.0	3.0	3.0	3.0	3.0	3.0	3.0	3.0	3.0	3.0	3.0	3.0	3.0	3.0	3.0	3.0	3.0	3.0
15	3.0	3.0	3.0	3.0	3.0	3.0	3.0	3.0	3.0	3.0	3.0	3.0	3.0	3.0	3.0	3.0	3.0	3.0	3.0	3.0	3.0	3.0	3.0	3.0	3.0	3.0	3.0	3.0	3.0	3.0	3.0	3.0	3.0
20	3.0	3.0	3.0	3.0	3.0	3.0	3.0	3.0	3.0	3.0	3.0	3.0	3.0	3.0	3.0	3.0	3.0	3.0	3.0	3.0	3.0	3.0	3.0	3.0	3.0	3.0	3.0	3.0	3.0	3.0	3.0	3.0	3.0
25		3.0	3.0	3.0	3.0	3.0	3.0	3.0	3.0	3.0	3.0	3.0	3.0	3.0	3.0	3.0	3.0	3.0	3.0	3.0	3.0	3.0	3.0	3.0	3.0	3.0	3.0	3.0	3.0	3.0	3.0	3.0	3.0
28		3.5	3.0	3.0	3.0	3.0	3.0	3.0	3.0	3.0	3.0	3.0	3.0	3.0	3.0	3.0	3.0	3.0	3.0	3.0	3.0	3.0	3.0	3.0	3.0	3.0	3.0	3.0	3.0	3.0	3.0	3.0	3.0
30		3.5	3.5	3.0	3.0	3.0	3.0	3.0	3.0	3.0	3.0	3.0	3.0	3.0	3.0	3.0	3.0	3.0	3.0	3.0	3.0	3.0	3.0	3.0	3.0	3.0	3.0	3.0	3.0	3.0	3.0	3.0	3.0
32		4.0	3.5	3.5	3.5	3.5	3.5	3.5	3.5	3.0	3.0	3.0	3.0	3.0	3.0	3.0	3.0	3.0	3.0	3.0	3.0	3.0	3.0	3.0	3.0	3.0	3.0	3.0	3.0	3.0	3.0	3.0	3.0
34		4.0	4.0	3.5	3.5	3.5	3.5	3.5	3.5	3.5	3.5	3.5	3.5	3.5	3.5	3.5	3.5	3.5	3.5	3.5	3.5	3.5	3.0	3.0	3.0	3.0	3.0	3.0	3.0	3.0	3.0	3.0	3.0
36		4.5	4.0	4.0	4.0	4.0	4.0	4.0	3.5	3.5	3.5	3.5	3.5	3.5	3.5	3.5	3.5	3.5	3.5	3.5	3.5	3.5	3.5	3.5	3.5	3.5	3.5	3.5	3.5	3.5	3.5	3.5	3.5
38		5.0	4.5	4.5	4.0	4.0	4.0	4.0	4.0	4.0	4.0	4.0	4.0	4.0	4.0	4.0	4.0	4.0	3.5	3.5	3.5	3.5	3.5	3.5	3.5	3.5	3.5	3.5	3.5	3.5	3.5	3.5	3.5
39		5.0	4.5	4.5	4.5	4.5	4.0	4.0	4.0	4.0	4.0	4.0	4.0	4.0	4.0	4.0	4.0	4.0	4.0	4.0	4.0	4.0	4.0	4.0	4.0	4.0	3.5	3.5	3.5	3.5	3.5	3.5	3.5
40		5.5	4.5	4.5	4.5	4.5	4.5	4.5	4.5	4.0	4.0	4.0	4.0	4.0	4.0	4.0	4.0	4.0	4.0	4.0	4.0	4.0	4.0	4.0	4.0	4.0	4.0	4.0	4.0	4.0	4.0	4.0	4.0
41		5.5	5.0	5.0	4.5	4.5	4.5	4.5	4.5	4.5	4.5	4.0	4.0	4.0	4.0	4.0	4.0	4.0	4.0	4.0	4.0	4.0	4.0	4.0	4.0	4.0	4.0	4.0	4.0	4.0	4.0	4.0	4.0
42										4.5	4.5	4.5	4.5	4.5	4.5	4.5	4.5	4.5	4.0	4.0	4.0	4.0	4.0	4.0	4.0	4.0	4.0	4.0	4.0	4.0	4.0	4.0	4.0
43										4.5	4.5	4.5	4.5	4.5	4.5	4.5	4.5	4.5	4.5	4.5	4.5	4.5	4.0	4.0	4.0	4.0	4.0	4.0	4.0	4.0	4.0	4.0	4.0
44										5.0	4.5	4.5	4.5	4.5	4.5	4.5	4.5	4.5	4.5	4.5	4.5	4.5	4.5	4.5	4.5	4.5	4.5	4.5	4.5	4.5	4.5	4.5	4.0
45										5.0	5.0	5.0	5.0	5.0	5.0	4.5	4.5	4.5	4.5	4.5	4.5	4.5	4.5	4.5	4.5	4.5	4.5	4.5	4.5	4.5	4.5	4.5	4.5
46										5.0	5.0	5.0	5.0	5.0	5.0	5.0	5.0	5.0	5.0	4.5	4.5	4.5	4.5	4.5	4.5	4.5	4.5	4.5	4.5	4.5	4.5	4.5	4.5
47										5.5	5.5	5.0	5.0	5.0	5.0	5.0	5.0	5.0	5.0	5.0	5.0	5.0	5.0	5.0	5.0	4.5	4.5	4.5	4.5	4.5	4.5	4.5	4.5
48										5.5	5.5	5.5	5.5	5.5	5.5	5.0	5.0	5.0	5.0	5.0	5.0	5.0	5.0	5.0	5.0	5.0	5.0	5.0	5.0	5.0	5.0	5.0	5.0
49													5.5	5.5	5.5	5.5	5.5	5.5	5.5	5.0	5.0	5.0	5.0	5.0	5.0	5.0	5.0	5.0	5.0	5.0	5.0	5.0	5.0
50													5.5	5.5	5.5	5.5	5.5	5.5	5.5	5.5	5.5	5.5	5.5	5.5	5.0	5.0	5.0	5.0	5.0	5.0	5.0	5.0	5.0
51													6.0	6.0	6.0	6.0	5.5	5.5	5.5	5.5	5.5	5.5	5.5	5.5	5.5	5.5	5.5	5.5	5.5	5.5	5.0	5.0	5.0
52														6.0	6.0	6.0	6.0	6.0	6.0	6.0	5.5	5.5	5.5	5.5	5.5	5.5	5.5	5.5	5.5	5.5	5.5	5.5	5.5
53														6.0	6.0	6.0	6.0	6.0	6.0	6.0	6.0	6.0	6.0	6.0	6.0	6.0	6.0	5.5	5.5	5.5	5.5	5.5	5.5
54															6.5	6.5	6.5	6.5	6.5	6.0	6.0	6.0	6.0	6.0	6.0	6.0	6.0	6.0	6.0	6.0	6.0	6.0	5.5
55															6.5	6.5	6.5	6.5	6.5	6.5	6.5	6.5	6.5	6.5	6.0	6.0	6.0	6.0	6.0	6.0	6.0	6.0	6.0
56															7.0	7.0	7.0	7.0	6.5	6.5	6.5	6.5	6.5	6.5	6.5	6.5	6.5	6.5	6.5	6.0	6.0	6.0	6.0
57																	7.0	7.0	7.0	7.0	7.0	7.0	7.0	6.5	6.5	6.5	6.5	6.5	6.5	6.5	6.5	6.5	6.5
58																	7.5	7.5	7.5	7.0	7.0	7.0	7.0	7.0	7.0	7.0	7.0	7.0	6.5	6.5	6.5	6.5	6.5
59																	7.5	7.5	7.5	7.5	7.5	7.5	7.5	7.5	7.0	7.0	7.0	7.0	7.0	7.0	7.0	7.0	7.0
60																	8.0	8.0	8.0	8.0	8.0	7.5	7.5	7.5	7.5	7.5	7.5	7.5	7.0	7.0	7.0	7.0	7.0
61																	8.5	8.5	8.5	8.0	8.0	8.0	8.0	8.0	8.0	7.5	7.5	7.5	7.5	7.5	7.5	7.5	7.5
62																	9.0	8.5	8.5	8.5	8.5	8.5	8.5	8.0	8.0	8.0	8.0	8.0	8.0	8.0	7.5	7.5	7.5

Note: If *irradiated* stainless steel rods are present in the *reconstituted* fuel assembly, add an additional year of cooling time.

Note: Page A-71 provides the explanatory notes and limitations regarding the use of this table.

Table 1-3h
PWR Fuel Qualification Table for Zone 4 Fuel with 1.3 kW per Assembly for the NUHOMS®-24PTH DSC (Fuel w/ CCs)
(Minimum required years of cooling time after reactor core discharge)

Burn Up, GWD/MTU	Maximum Assembly Average Initial U-235 Enrichment, wt. %																																	
	0.7	1.5	2.0	2.1	2.2	2.3	2.4	2.5	2.6	2.7	2.8	2.9	3.0	3.1	3.2	3.3	3.4	3.5	3.6	3.7	3.8	3.9	4.0	4.1	4.2	4.3	4.4	4.5	4.6	4.7	4.8	4.9	5.0
10	3.0	3.0	3.0	3.0	3.0	3.0	3.0	3.0	3.0	3.0	3.0	3.0	3.0	3.0	3.0	3.0	3.0	3.0	3.0	3.0	3.0	3.0	3.0	3.0	3.0	3.0	3.0	3.0	3.0	3.0	3.0	3.0	3.0
15	3.0	3.0	3.0	3.0	3.0	3.0	3.0	3.0	3.0	3.0	3.0	3.0	3.0	3.0	3.0	3.0	3.0	3.0	3.0	3.0	3.0	3.0	3.0	3.0	3.0	3.0	3.0	3.0	3.0	3.0	3.0	3.0	3.0
20	3.0	3.0	3.0	3.0	3.0	3.0	3.0	3.0	3.0	3.0	3.0	3.0	3.0	3.0	3.0	3.0	3.0	3.0	3.0	3.0	3.0	3.0	3.0	3.0	3.0	3.0	3.0	3.0	3.0	3.0	3.0	3.0	3.0
25		3.0	3.0	3.0	3.0	3.0	3.0	3.0	3.0	3.0	3.0	3.0	3.0	3.0	3.0	3.0	3.0	3.0	3.0	3.0	3.0	3.0	3.0	3.0	3.0	3.0	3.0	3.0	3.0	3.0	3.0	3.0	3.0
28		3.5	3.5	3.5	3.0	3.0	3.0	3.0	3.0	3.0	3.0	3.0	3.0	3.0	3.0	3.0	3.0	3.0	3.0	3.0	3.0	3.0	3.0	3.0	3.0	3.0	3.0	3.0	3.0	3.0	3.0	3.0	3.0
30		4.0	3.5	3.5	3.5	3.5	3.5	3.5	3.5	3.5	3.5	3.5	3.5	3.5	3.5	3.5	3.5	3.5	3.0	3.0	3.0	3.0	3.0	3.0	3.0	3.0	3.0	3.0	3.0	3.0	3.0	3.0	3.0
32		4.5	4.0	4.0	4.0	3.5	3.5	3.5	3.5	3.5	3.5	3.5	3.5	3.5	3.5	3.5	3.5	3.5	3.5	3.5	3.5	3.5	3.5	3.5	3.5	3.5	3.5	3.5	3.5	3.5	3.5	3.5	3.5
34		4.5	4.0	4.0	4.0	4.0	4.0	4.0	4.0	4.0	4.0	4.0	4.0	4.0	4.0	4.0	4.0	3.5	3.5	3.5	3.5	3.5	3.5	3.5	3.5	3.5	3.5	3.5	3.5	3.5	3.5	3.5	3.5
36		5.0	4.5	4.5	4.5	4.5	4.0	4.0	4.0	4.0	4.0	4.0	4.0	4.0	4.0	4.0	4.0	4.0	4.0	4.0	4.0	4.0	4.0	4.0	4.0	4.0	4.0	4.0	4.0	4.0	4.0	4.0	4.0
38		5.5	5.0	5.0	4.5	4.5	4.5	4.5	4.5	4.5	4.5	4.5	4.5	4.5	4.5	4.5	4.5	4.5	4.5	4.0	4.0	4.0	4.0	4.0	4.0	4.0	4.0	4.0	4.0	4.0	4.0	4.0	4.0
39		6.0	5.0	5.0	5.0	5.0	4.5	4.5	4.5	4.5	4.5	4.5	4.5	4.5	4.5	4.5	4.5	4.5	4.5	4.5	4.5	4.5	4.5	4.5	4.5	4.5	4.0	4.0	4.0	4.0	4.0	4.0	4.0
40		6.0	5.5	5.0	5.0	5.0	5.0	5.0	5.0	5.0	4.5	4.5	4.5	4.5	4.5	4.5	4.5	4.5	4.5	4.5	4.5	4.5	4.5	4.5	4.5	4.5	4.5	4.5	4.5	4.5	4.5	4.5	4.5
41		6.5	5.5	5.5	5.5	5.0	5.0	5.0	5.0	5.0	5.0	5.0	5.0	5.0	5.0	5.0	4.5	4.5	4.5	4.5	4.5	4.5	4.5	4.5	4.5	4.5	4.5	4.5	4.5	4.5	4.5	4.5	4.5
42										5.0	5.0	5.0	5.0	5.0	5.0	5.0	5.0	5.0	5.0	5.0	5.0	5.0	4.5	4.5	4.5	4.5	4.5	4.5	4.5	4.5	4.5	4.5	4.5
43										5.5	5.5	5.0	5.0	5.0	5.0	5.0	5.0	5.0	5.0	5.0	5.0	5.0	5.0	5.0	5.0	5.0	5.0	5.0	5.0	5.0	5.0	4.5	4.5
44										5.5	5.5	5.5	5.5	5.5	5.5	5.5	5.5	5.5	5.0	5.0	5.0	5.0	5.0	5.0	5.0	5.0	5.0	5.0	5.0	5.0	5.0	5.0	5.0
45										5.5	5.5	5.5	5.5	5.5	5.5	5.5	5.5	5.5	5.5	5.5	5.5	5.5	5.5	5.0	5.0	5.0	5.0	5.0	5.0	5.0	5.0	5.0	5.0
46										6.0	6.0	6.0	6.0	6.0	5.5	5.5	5.5	5.5	5.5	5.5	5.5	5.5	5.5	5.5	5.5	5.5	5.5	5.5	5.5	5.5	5.5	5.0	5.0
47										6.0	6.0	6.0	6.0	6.0	6.0	6.0	6.0	6.0	6.0	6.0	5.5	5.5	5.5	5.5	5.5	5.5	5.5	5.5	5.5	5.5	5.5	5.5	5.5
48										6.5	6.5	6.5	6.5	6.0	6.0	6.0	6.0	6.0	6.0	6.0	6.0	6.0	6.0	6.0	6.0	5.5	5.5	5.5	5.5	5.5	5.5	5.5	5.5
49													6.5	6.5	6.5	6.5	6.5	6.5	6.5	6.0	6.0	6.0	6.0	6.0	6.0	6.0	6.0	6.0	6.0	6.0	6.0	6.0	6.0
50													7.0	6.5	6.5	6.5	6.5	6.5	6.5	6.5	6.5	6.5	6.5	6.5	6.0	6.0	6.0	6.0	6.0	6.0	6.0	6.0	6.0
51													7.0	7.0	7.0	7.0	7.0	7.0	7.0	6.5	6.5	6.5	6.5	6.5	6.5	6.5	6.5	6.5	6.5	6.5	6.5	6.0	6.0
52														7.5	7.5	7.0	7.0	7.0	7.0	7.0	7.0	7.0	7.0	6.5	6.5	6.5	6.5	6.5	6.5	6.5	6.5	6.5	6.5
53														7.5	7.5	7.5	7.5	7.5	7.5	7.5	7.5	7.0	7.0	7.0	7.0	7.0	7.0	7.0	7.0	7.0	7.0	6.5	6.5
54															8.0	8.0	8.0	8.0	7.5	7.5	7.5	7.5	7.5	7.5	7.5	7.5	7.0	7.0	7.0	7.0	7.0	7.0	7.0
55															8.5	8.0	8.0	8.0	8.0	8.0	8.0	8.0	7.5	7.5	7.5	7.5	7.5	7.5	7.5	7.5	7.5	7.5	7.0
56															8.5	8.5	8.5	8.5	8.5	8.5	8.0	8.0	8.0	8.0	8.0	8.0	8.0	7.5	7.5	7.5	7.5	7.5	7.5
57																	9.0	9.0	9.0	8.5	8.5	8.5	8.5	8.5	8.5	8.5	8.0	8.0	8.0	8.0	8.0	8.0	8.0
58																	9.5	9.5	9.5	9.5	9.0	9.0	9.0	9.0	9.0	8.5	8.5	8.5	8.5	8.5	8.5	8.5	8.0
59																	10.0	10.0	9.5	10.0	9.5	9.5	9.5	9.5	9.5	9.0	9.0	9.0	9.0	9.0	8.5	8.5	8.5
60																	10.5	10.5	10.5	10.5	10.0	10.0	10.0	10.0	10.0	9.5	9.5	9.5	9.5	9.5	9.5	9.0	9.0
61																	11.0	11.0	11.0	11.0	10.5	10.5	10.5	10.5	10.5	10.0	10.0	10.0	10.0	10.0	9.5	9.5	9.5
62																	12.0	11.5	11.5	11.5	11.5	11.0	11.0	11.0	11.0	10.5	10.5	10.5	10.5	10.5	10.0	10.0	10.0

Note: If *irradiated* stainless steel rods are present in the *reconstituted* fuel assembly, add an additional year of cooling time for cooling times less than 10 years.

Note: Page A-71 provides the explanatory notes and limitations regarding the use of this table.

Notes: Tables 1-3a through 1-3h:

- Burnup = Assembly Average burnup.
- Use burnup and enrichment to lookup minimum cooling time in years. Licensee is responsible for ensuring that uncertainties in fuel enrichment and burnup are correctly accounted for during fuel qualification.
- Round burnup UP to next higher entry, round enrichments DOWN to next lower entry.
- Fuel with an assembly average initial enrichment less than 0.7 wt. % U-235 (or less than the minimum provided above for each burnup) and greater than 5.0 wt.% U-235 is unacceptable for storage.
- Fuel with a burnup greater than 62 GWd/MTU is unacceptable for storage.
- Fuel with a burnup less than 10 GWd/MTU is acceptable for storage after 3-years cooling.
- WE 15x15 PLSAs shall be limited to a minimum assembly average initial enrichment of 1.2 wt. % U-235.
- See Figures 1-11 through 1-15 for the description of zones.
- For reconstituted fuel assemblies with UO_2 rods and/or Zr rods or Zr pellets and/or stainless steel rods, use the assembly average equivalent enrichment to determine the minimum cooling time.
- The cooling times for damaged and intact assemblies are identical.
- *Example*: An intact fuel assembly without CCs, with a decay heat load of 1.7 kW or less, an initial enrichment of 3.65 wt. % U-235 and a burnup of 41.5 GWd/MTU is acceptable for storage after a 4.0 year cooling time as defined by 3.6 wt. % U-235 (rounding down) and 42 GWd/MTU (rounding up) in Table 1-3a.

Table 1-4a
BWR Fuel Qualification Table for Zone 1 Fuel with 0.22 kW per Assembly for the NUHOMS®-61BTH DSC
(Minimum required years of cooling time after reactor core discharge)

Burn-Up, GWD/MTU	*Lattice Average Initial U-235 Enrichment, wt %*																																	
	0.9	1.2	1.5	2.0	2.1	2.2	2.3	2.4	2.5	2.6	2.7	2.8	2.9	3.0	3.1	3.2	3.3	3.4	3.5	3.6	3.7	3.8	3.9	4.0	4.1	4.2	4.3	4.4	4.5	4.6	4.7	4.8	4.9	5.0
10	3.0	3.0	3.0	3.0	3.0	3.0	3.0	3.0	3.0	3.0	3.0	3.0	3.0	3.0	3.0	3.0	3.0	3.0	3.0	3.0	3.0	3.0	3.0	3.0	3.0	3.0	3.0	3.0	3.0	3.0	3.0	3.0	3.0	3.0
15	4.0	4.0	4.0	4.0	3.5	3.5	3.5	3.5	3.5	3.5	3.5	3.5	3.5	3.5	3.5	3.5	3.5	3.5	3.5	3.5	3.5	3.5	3.5	3.5	3.5	3.5	3.5	3.5	3.5	3.5	3.5	3.5	3.5	3.5
20	5.0	5.0	5.0	5.0	5.0	5.0	5.0	5.0	5.0	5.0	5.0	5.0	5.0	5.0	5.0	5.0	5.0	4.5	4.5	4.5	4.5	4.5	4.5	4.5	4.5	4.5	4.5	4.5	4.5	4.5	4.5	4.5	4.5	4.5
23	6.0	6.0	6.0	6.0	6.0	6.0	6.0	6.0	5.5	5.5	5.5	5.5	5.5	5.5	5.5	5.5	5.5	5.5	5.5	5.5	5.5	5.5	5.5	5.5	5.5	5.5	5.5	5.5	5.5	5.5	5.5	5.5	5.5	5.5
25	7.0	7.0	6.5	6.5	6.5	6.5	6.5	6.5	6.5	6.5	6.5	6.5	6.5	6.5	6.5	6.5	6.5	6.5	6.0	6.0	6.0	6.0	6.0	6.0	6.0	6.0	6.0	6.0	6.0	6.0	6.0	6.0	6.0	6.0
28	8.5	8.5	8.5	8.0	8.0	8.0	8.0	8.0	8.0	8.0	8.0	8.0	8.0	8.0	8.0	8.0	8.0	7.5	7.5	7.5	7.5	7.5	7.5	7.5	7.5	7.5	7.5	7.5	7.5	7.5	7.5	7.5	7.5	7.5
30	10.5	10.0	9.5	9.5	9.5	9.5	9.5	9.5	9.0	9.0	9.0	9.0	9.0	9.0	9.0	9.0	9.0	9.0	9.0	9.0	8.5	8.5	8.5	8.5	8.5	8.5	8.5	8.5	8.5	8.5	8.5	8.5	8.5	8.5
32	Not Analyzed			11.0	11.0	11.0	11.0	11.0	11.0	11.0	11.0	11.0	11.0	11.0	11.0	11.0	11.0	10.5	10.5	10.5	10.5	10.0	10.5	10.5	10.5	10.5	10.5	10.0	10.0	10.0	10.0	10.0	10.0	10.0
34				14.0	14.0	14.0	14.0	14.0	14.0	14.0	13.0	13.0	13.0	13.0	13.0	13.0	12.5	12.5	12.5	12.5	12.5	12.5	12.5	12.5	12.5	12.5	12.5	12.5	12.5	12.5	12.5	12.5	12.5	12.5
36				16.5	16.0	16.0	16.0	16.0	16.0	15.5	15.5	15.5	15.5	15.5	15.5	15.5	15.5	15.5	15.5	15.5	15.0	15.0	15.0	15.0	15.0	15.0	15.0	15.0	15.0	15.0	14.5	14.5	14.5	14.5
38				19.5	19.0	19.0	19.0	19.0	18.5	18.5	18.5	18.5	18.5	18.5	18.5	18.5	18.0	18.0	18.0	18.0	18.0	18.0	18.0	17.5	17.5	17.5	17.5	17.5	17.5	17.5	17.5	17.5	17.5	17.5
39				21.0	21.0	20.5	20.5	20.5	20.5	20.5	20.5	20.0	20.0	20.0	20.0	19.5	19.5	19.5	19.5	19.5	19.5	19.5	19.5	19.0	19.0	19.0	19.0	19.0	19.0	19.0	19.0	19.0	19.0	19.0
40										22.0	21.5	21.5	21.5	21.5	21.5	21.0	21.0	21.0	21.0	21.0	21.0	21.0	21.0	20.5	20.5	20.5	20.5	20.5	20.5	20.5	20.5	20.5	20.5	20.5
41										23.5	23.5	23.0	23.0	23.0	23.0	23.0	22.5	22.5	22.5	22.5	22.5	22.5	22.0	22.0	22.0	22.0	22.0	22.0	22.0	22.0	22.0	22.0	22.0	21.5
42										24.5	24.5	24.5	24.5	24.5	24.5	24.0	24.0	24.0	24.0	24.0	24.0	24.0	24.0	24.0	24.0	23.5	23.5	23.5	23.5	23.5	23.5	23.5	23.5	23.5
43										26.0	26.0	26.0	26.0	26.0	25.5	25.5	25.5	25.5	25.5	25.5	25.5	25.5	25.0	25.0	25.0	25.0	25.0	25.0	25.0	25.0	25.0	25.0	25.0	24.5
44										27.5	27.5	27.5	27.5	27.5	27.5	27.5	27.0	27.0	27.0	27.0	27.0	27.0	27.0	27.0	26.5	26.5	26.5	26.5	26.5	26.0	26.5	26.0	26.0	26.0
45										29.0	29.0	29.0	29.0	29.0	28.5	28.5	28.5	28.5	28.5	28.5	28.5	28.5	28.5	28.0	28.0	28.0	28.0	28.0	27.5	27.5	27.5	27.5	27.5	27.5
46										30.5	30.5	30.5	30.5	30.0	30.0	30.0	30.0	30.0	30.0	30.0	30.0	29.5	29.5	29.5	29.5	29.5	29.5	29.5	29.5	29.5	29.5	29.0	29.0	29.0
47										31.5	31.5	31.5	31.5	31.5	31.5	31.5	31.5	31.5	31.0	31.0	31.0	31.0	31.0	31.0	31.0	31.0	31.0	31.0	30.5	30.5	30.5	30.5	30.5	30.5
48										33.0	33.0	33.0	33.0	33.0	33.0	33.0	33.0	32.5	32.5	32.5	32.5	32.5	32.5	32.5	32.5	32.5	32.5	32.0	32.0	32.0	32.0	32.0	32.0	32.0
49										34.5	34.5	34.5	34.0	34.0	34.0	34.0	34.0	34.0	34.0	34.0	34.0	34.0	34.0	33.5	33.5	33.5	33.5	33.5	33.5	33.5	33.0	33.0	33.0	33.0
50										36.0	35.5	35.5	35.5	35.5	35.5	35.5	35.5	35.5	35.5	35.0	35.0	35.0	35.0	35.0	35.0	35.0	34.5	34.5	34.5	34.5	34.5	34.5	34.5	34.5
51										37.0	37.0	37.0	37.0	37.0	37.0	36.5	36.5	36.5	36.5	36.5	36.5	36.5	36.5	36.5	36.5	36.0	36.0	36.0	36.0	36.0	36.0	36.0	36.0	36.0
52										38.5	38.0	38.0	38.0	38.0	38.0	38.0	37.5	37.5	37.5	37.5	37.5	37.5	37.5	37.5	37.5	37.5	37.5	37.5	37.5	37.5	37.5	37.5	37.5	37.0
53										39.5	39.5	39.5	39.5	39.5	39.5	39.0	39.0	39.0	39.0	39.0	39.0	39.0	39.0	39.0	39.0	39.0	39.0	39.0	39.0	39.5	39.0	38.5	38.5	38.5
54										41.0	41.0	40.5	40.5	40.5	40.5	40.5	40.5	40.5	40.5	40.5	40.5	40.0	40.0	40.0	40.0	40.0	40.0	40.0	40.0	40.0	40.0	40.0	40.0	39.5
55										41.5	41.5	41.5	41.5	41.5	41.5	41.5	41.5	41.5	41.5	41.5	41.5	41.5	41.5	41.5	41.5	41.5	41.5	41.5	41.5	41.0	41.0	41.0	41.0	41.0
56										43.0	43.0	43.0	43.0	42.5	42.5	42.5	42.5	42.5	42.5	42.5	42.5	42.5	42.5	42.5	42.5	42.5	42.5	42.5	42.5	42.5	42.5	42.5	42.5	42.5
57										44.0	44.0	44.0	44.0	44.0	44.0	44.0	44.0	44.0	44.0	44.0	43.5	43.5	43.5	43.5	43.5	43.5	43.5	43.5	43.5	43.5	43.5	43.5	43.5	43.5
58										45.0	45.0	45.0	45.0	45.0	45.0	45.0	45.0	45.0	45.0	45.0	45.0	45.0	45.0	45.0	45.0	45.0	45.0	45.0	45.0	45.0	44.5	44.5	44.5	44.5
59										46.0	46.0	46.0	46.0	46.0	46.5	46.0	46.0	46.0	46.0	46.0	46.0	46.0	46.0	46.5	46.0	46.0	46.0	46.0	46.0	46.0	46.0	46.0	46.0	45.5
60										47.0	47.0	47.0	47.0	47.0	47.0	47.0	47.0	47.0	47.0	47.0	47.0	47.0	47.0	47.0	47.0	47.0	47.0	47.0	47.0	47.0	47.0	47.0	47.0	47.0
61										48.0	48.0	48.0	48.0	48.0	48.0	48.0	48.0	48.0	48.0	48.0	48.0	48.0	48.0	48.0	48.0	48.0	48.0	48.0	48.0	48.5	48.0	48.0	48.0	48.0
62										49.5	49.5	49.5	49.5	49.5	49.5	49.5	49.5	49.5	49.5	49.5	49.5	49.5	49.5	49.5	49.5	49.5	49.5	49.5	49.5	49.5	49.5	49.5	49.5	49.5

If 10 irradiated stainless steel rods are present in the reconstituted fuel assembly, add an additional 5.0 years of cooling time.

Note: The page that follows Table 1-4f provides explanatory notes and limitations regarding the use of this table.

Table 1-4b
BWR Fuel Qualification Table for Zone 2 Fuel with 0.35 kW per Assembly for the NUHOMS®-61BTH DSC

(Minimum required years of cooling time after reactor core discharge)

Burn-Up, GWD/MTU	*Lattice Average Initial U-235 Enrichment, wt %*																																	
	0.9	1.2	1.5	2.0	2.1	2.2	2.3	2.4	2.5	2.6	2.7	2.8	2.9	3.0	3.1	3.2	3.3	3.4	3.5	3.6	3.7	3.8	3.9	4.0	4.1	4.2	4.3	4.4	4.5	4.6	4.7	4.8	4.9	5.0
10	3.0	3.0	3.0	3.0	3.0	3.0	3.0	3.0	3.0	3.0	3.0	3.0	3.0	3.0	3.0	3.0	3.0	3.0	3.0	3.0	3.0	3.0	3.0	3.0	3.0	3.0	3.0	3.0	3.0	3.0	3.0	3.0	3.0	3.0
15	3.0	3.0	3.0	3.0	3.0	3.0	3.0	3.0	3.0	3.0	3.0	3.0	3.0	3.0	3.0	3.0	3.0	3.0	3.0	3.0	3.0	3.0	3.0	3.0	3.0	3.0	3.0	3.0	3.0	3.0	3.0	3.0	3.0	3.0
20	3.5	3.5	3.5	3.5	3.5	3.5	3.5	3.5	3.5	3.5	3.5	3.5	3.5	3.5	3.5	3.5	3.5	3.5	3.5	3.0	3.0	3.0	3.0	3.0	3.0	3.0	3.0	3.0	3.0	3.0	3.0	3.0	3.0	3.0
23	4.0	4.0	4.0	4.0	4.0	4.0	4.0	4.0	4.0	4.0	4.0	4.0	4.0	4.0	3.5	3.5	3.5	3.5	3.5	3.5	3.5	3.5	3.5	3.5	3.5	3.5	3.5	3.5	3.5	3.5	3.5	3.5	3.5	3.5
25	4.5	4.5	4.5	4.0	4.0	4.0	4.0	4.0	4.0	4.0	4.0	4.0	4.0	4.0	4.0	4.0	4.0	4.0	4.0	4.0	4.0	4.0	4.0	4.0	4.0	4.0	4.0	4.0	4.0	4.0	4.0	4.0	4.0	4.0
28	5.0	5.0	5.0	4.5	4.5	4.5	4.5	4.5	4.5	4.5	4.5	4.5	4.5	4.5	4.5	4.5	4.5	4.5	4.5	4.5	4.5	4.5	4.5	4.5	4.5	4.5	4.5	4.5	4.5	4.5	4.5	4.5	4.5	4.5
30	5.5	5.5	5.5	5.0	5.0	5.0	5.0	5.0	5.0	5.0	5.0	5.0	5.0	5.0	5.0	5.0	5.0	5.0	4.5	4.5	4.5	4.5	4.5	4.5	4.5	4.5	4.5	4.5	4.5	4.5	4.5	4.5	4.5	4.5
32			6.0	5.5	5.5	5.5	5.5	5.5	5.5	5.5	5.5	5.5	5.5	5.5	5.5	5.5	5.5	5.5	5.0	5.0	5.0	5.0	5.0	5.0	5.0	5.0	5.0	5.0	5.0	5.0	5.0	5.0	5.0	5.0
34				6.0	6.0	6.0	6.0	6.0	6.0	6.0	6.0	5.5	5.5	5.5	5.5	5.5	5.5	5.5	5.5	5.5	5.5	5.5	5.5	5.5	5.5	5.5	5.5	5.5	5.5	5.5	5.5	5.5	5.5	5.5
36				6.5	6.5	6.5	6.5	6.5	6.5	6.5	6.5	6.5	6.0	6.0	6.0	6.0	6.0	6.0	6.0	6.0	6.0	6.0	6.0	6.0	6.0	6.0	6.0	6.0	6.0	6.0	6.0	6.0	6.0	6.0
38				7.0	7.0	7.0	7.0	7.0	7.0	7.0	7.0	7.0	7.0	7.0	7.0	7.0	7.0	7.0	6.5	6.5	6.5	6.5	6.5	6.5	6.5	6.5	6.5	6.5	6.5	6.5	6.5	6.5	6.5	6.5
39				7.5	7.5	7.5	7.5	7.5	7.5	7.5	7.0	7.0	7.0	7.0	7.0	7.0	7.0	7.0	7.0	7.0	7.0	7.0	7.0	7.0	6.5	6.5	6.5	6.5	6.5	6.5	6.5	6.5	6.5	6.5
40										7.5	7.5	7.5	7.5	7.5	7.5	7.5	7.5	7.5	7.5	7.5	7.5	7.5	7.0	7.0	7.0	7.0	7.0	7.0	7.0	7.0	7.0	7.0	7.0	7.0
41										8.0	8.0	8.0	8.0	8.0	8.0	8.0	7.5	7.5	7.5	7.5	7.5	7.5	7.5	7.5	7.5	7.5	7.5	7.5	7.5	7.5	7.5	7.5	7.5	7.5
42										8.5	8.5	8.5	8.5	8.5	8.5	8.5	8.0	8.0	8.0	8.0	8.0	8.0	8.0	8.0	8.0	8.0	7.5	7.5	7.5	7.5	7.5	7.5	7.5	7.5
43										9.0	9.0	9.0	9.0	9.0	8.5	8.5	8.5	8.5	8.5	8.5	8.5	8.5	8.5	8.5	8.5	8.5	8.5	8.0	8.0	8.0	8.0	8.0	8.0	8.0
44										9.5	9.5	9.5	9.5	9.5	9.0	9.0	9.0	9.0	9.0	9.0	9.0	9.0	9.0	9.0	9.0	9.0	9.0	9.0	8.5	8.5	8.5	8.5	8.5	8.5
45										10.5	10.5	10.0	10.0	10.0	10.0	10.0	10.0	10.0	10.0	10.0	10.0	9.5	9.5	9.0	9.0	9.0	9.0	9.0	9.0	9.0	9.0	9.0	9.0	9.0
46										11.0	11.0	10.5	10.5	10.5	10.5	10.5	10.5	10.5	10.5	10.5	10.5	10.5	10.0	10.0	10.0	10.0	10.0	9.5	9.5	9.5	9.5	9.5	9.5	9.5
47										12.0	11.5	11.5	11.5	11.0	11.0	11.0	11.0	11.0	11.0	11.0	11.0	11.0	10.5	10.5	10.5	10.5	10.5	10.5	10.5	10.0	10.0	10.0	10.0	10.0
48										12.5	12.5	12.5	12.5	12.5	12.5	12.0	11.5	11.5	11.5	11.5	11.5	11.5	11.5	11.5	11.5	11.5	11.5	11.5	11.5	11.5	11.0	10.5	10.5	10.5
49										13.5	13.0	13.0	13.0	13.0	13.0	13.0	13.0	13.0	13.0	13.0	13.0	13.0	12.0	12.0	11.5	11.5	11.5	11.5	11.5	11.5	11.5	11.5	11.5	11.5
50										14.5	14.5	14.5	14.5	14.5	14.5	14.5	14.5	13.0	13.0	13.0	13.0	13.0	13.0	13.0	13.0	13.0	13.0	12.5	12.5	12.5	12.0	12.0	12.0	12.0
51										15.5	15.0	15.0	15.0	15.0	15.0	15.0	15.0	14.0	14.0	14.0	14.0	14.0	14.0	14.0	14.0	14.0	14.0	14.0	13.0	13.0	13.0	13.0	13.0	13.0
52										16.5	16.0	16.0	16.0	16.0	16.0	16.0	16.0	16.0	15.0	15.0	15.0	15.0	15.0	15.0	15.0	15.0	15.0	14.0	14.0	14.0	14.0	14.0	14.0	14.0
53										17.5	17.0	17.0	17.0	17.0	17.0	17.0	17.0	17.0	16.0	16.0	16.0	16.0	16.0	16.0	16.0	16.0	16.0	16.0	15.0	15.0	15.0	15.0	15.0	15.0
54										18.5	18.5	18.0	18.0	18.0	18.0	18.0	18.0	18.0	17.0	17.0	17.0	17.0	17.0	17.0	17.0	17.0	17.0	17.0	16.0	16.0	16.0	16.0	16.0	16.0
55										20.5	20.5	19.0	19.0	19.0	19.0	19.0	19.0	19.0	18.0	18.0	18.0	18.0	18.0	18.0	18.0	18.0	18.0	18.0	17.0	17.0	17.0	17.0	17.0	17.0
56										21.5	21.5	20.5	20.5	20.5	20.5	20.5	20.5	20.5	19.0	19.0	19.0	19.0	19.0	19.0	19.0	19.0	19.0	18.0	18.0	18.0	18.0	18.0	18.0	18.0
57										22.5	22.5	22.5	21.5	21.5	21.5	21.5	21.5	21.5	21.5	20.0	20.0	20.0	20.0	20.0	20.0	20.0	20.0	20.0	19.0	19.0	19.0	19.0	19.0	19.0
58										22.5	22.5	22.5	22.5	22.5	22.5	22.5	22.5	22.5	22.5	21.0	21.0	21.0	21.0	21.0	21.0	21.0	21.0	21.0	21.0	21.0	20.0	20.0	20.0	20.0
59										23.5	23.5	23.5	23.5	23.5	23.5	23.5	23.5	23.5	23.5	23.5	22.0	22.0	22.0	22.0	22.0	22.0	22.0	22.0	22.0	22.0	21.0	21.0	21.0	21.0
60										24.5	24.5	24.5	24.5	24.5	24.5	24.5	24.5	24.5	24.5	24.5	23.0	23.0	23.0	23.0	23.0	23.0	23.0	23.0	23.0	23.0	22.0	22.0	22.0	22.0
61										26.5	26.5	26.5	25.5	25.5	25.5	25.5	25.5	25.5	25.5	25.5	24.0	24.0	24.0	24.0	24.0	24.0	24.0	24.0	24.0	24.0	23.0	23.0	23.0	23.0
62										27.5	27.5	27.5	27.5	26.0	26.0	26.0	26.0	26.0	26.0	26.0	26.0	25.0	25.0	25.0	25.0	25.0	25.0	25.0	25.0	25.0	25.0	25.0	24.0	24.0

Not Analyzed

If 10 irradiated stainless steel rods are present in the reconstituted fuel assembly, add an additional 5.0 years of cooling time.

Note: The page that follows Table 1-4f provides the explanatory notes and limitations regarding the use of this table.

Table 1-4c
BWR Fuel Qualification Table for Zone 3 Fuel with 0.393 kW per Assembly for the NUHOMS®-61BTH DSC
(Minimum required years of cooling time after reactor core discharge)

Burn-Up, GWD/MTU	*Lattice Average Initial U-235 Enrichment, wt %*																																	
	0.9	1.2	1.5	2.0	2.1	2.2	2.3	2.4	2.5	2.6	2.7	2.8	2.9	3.0	3.1	3.2	3.3	3.4	3.5	3.6	3.7	3.8	3.9	4.0	4.1	4.2	4.3	4.4	4.5	4.6	4.7	4.8	4.9	5.0
10	3.0	3.0	3.0	3.0	3.0	3.0	3.0	3.0	3.0	3.0	3.0	3.0	3.0	3.0	3.0	3.0	3.0	3.0	3.0	3.0	3.0	3.0	3.0	3.0	3.0	3.0	3.0	3.0	3.0	3.0	3.0	3.0	3.0	3.0
15	3.0	3.0	3.0	3.0	3.0	3.0	3.0	3.0	3.0	3.0	3.0	3.0	3.0	3.0	3.0	3.0	3.0	3.0	3.0	3.0	3.0	3.0	3.0	3.0	3.0	3.0	3.0	3.0	3.0	3.0	3.0	3.0	3.0	3.0
20	3.5	3.0	3.0	3.0	3.0	3.0	3.0	3.0	3.0	3.0	3.0	3.0	3.0	3.0	3.0	3.0	3.0	3.0	3.0	3.0	3.0	3.0	3.0	3.0	3.0	3.0	3.0	3.0	3.0	3.0	3.0	3.0	3.0	3.0
23	4.0	4.0	3.5	3.5	3.5	3.5	3.5	3.5	3.5	3.5	3.5	3.5	3.5	3.5	3.5	3.5	3.5	3.5	3.5	3.5	3.5	3.5	3.0	3.0	3.0	3.0	3.0	3.0	3.0	3.0	3.0	3.0	3.0	3.0
25	4.0	4.0	4.0	4.0	4.0	4.0	4.0	4.0	4.0	4.0	4.0	4.0	3.5	3.5	3.5	3.5	3.5	3.5	3.5	3.5	3.5	3.5	3.5	3.5	3.5	3.5	3.5	3.5	3.5	3.5	3.5	3.5	3.5	3.5
28	4.5	4.5	4.5	4.5	4.0	4.0	4.0	4.0	4.0	4.0	4.0	4.0	4.0	4.0	4.0	4.0	4.0	4.0	4.0	4.0	4.0	4.0	4.0	4.0	4.0	4.0	4.0	4.0	4.0	4.0	4.0	4.0	4.0	4.0
30	5.0	5.0	5.0	4.5	4.5	4.5	4.5	4.5	4.5	4.5	4.5	4.5	4.5	4.5	4.5	4.5	4.5	4.5	4.5	4.5	4.5	4.5	4.0	4.0	4.0	4.0	4.0	4.0	4.0	4.0	4.0	4.0	4.0	4.0
32				5.0	5.0	5.0	5.0	5.0	5.0	5.0	5.0	5.0	5.0	5.0	5.0	5.0	4.5	4.5	4.5	4.5	4.5	4.5	4.5	4.5	4.5	4.5	4.5	4.5	4.5	4.5	4.5	4.5	4.5	4.5
34				5.5	5.5	5.5	5.0	5.0	5.0	5.0	5.0	5.0	5.0	5.0	5.0	5.0	5.0	5.0	5.0	5.0	5.0	5.0	5.0	5.0	5.0	5.0	5.0	5.0	5.0	5.0	5.0	5.0	4.5	4.5
36				6.0	6.0	6.0	6.0	5.5	5.5	5.5	5.5	5.5	5.5	5.5	5.5	5.5	5.5	5.5	5.5	5.5	5.5	5.5	5.5	5.0	5.0	5.0	5.0	5.0	5.0	5.0	5.0	5.0	5.0	5.0
38				6.5	6.0	6.0	6.0	6.0	6.0	6.0	6.0	6.0	6.0	6.0	6.0	6.0	6.0	6.0	6.0	6.0	6.0	6.0	6.0	6.0	5.5	5.5	5.5	5.5	5.5	5.5	5.5	5.5	5.5	5.5
39				6.5	6.5	6.5	6.5	6.5	6.5	6.5	6.0	6.0	6.0	6.0	6.0	6.0	6.0	6.0	6.0	6.0	6.0	6.0	6.0	6.0	6.0	6.0	6.0	6.0	6.0	6.0	6.0	6.0	6.0	6.0
40										6.5	6.5	6.5	6.5	6.5	6.5	6.5	6.5	6.5	6.0	6.0	6.0	6.0	6.0	6.0	6.0	6.0	6.0	6.0	6.0	6.0	6.0	6.0	6.0	6.0
41										7.0	7.0	7.0	7.0	7.0	6.5	6.5	6.5	6.5	6.5	6.5	6.5	6.5	6.5	6.5	6.5	6.5	6.5	6.0	6.0	6.0	6.0	6.0	6.0	6.0
42										7.0	7.0	7.0	7.0	7.0	7.0	7.0	7.0	7.0	7.0	7.0	7.0	7.0	6.5	6.5	6.5	6.5	6.5	6.5	6.5	6.5	6.5	6.5	6.5	6.5
43										7.5	7.5	7.5	7.5	7.5	7.5	7.5	7.0	7.0	7.0	7.0	7.0	7.0	7.0	7.0	7.0	7.0	7.0	7.0	7.0	6.5	6.5	6.5	6.5	6.5
44										8.0	8.0	8.0	7.5	7.5	7.5	7.5	7.5	7.5	7.5	7.5	7.5	7.5	7.5	7.5	7.5	7.0	7.0	7.0	7.0	7.0	7.0	7.0	7.0	7.0
45										8.5	8.5	8.0	8.0	8.0	8.0	8.0	8.0	8.0	7.5	7.5	7.5	7.5	7.5	7.5	7.5	7.5	7.5	7.5	7.5	7.5	7.5	7.5	7.5	7.0
46										8.5	8.5	8.5	8.5	8.5	8.5	8.5	8.5	8.5	8.0	8.0	8.0	8.0	8.0	8.0	8.0	8.0	8.0	8.0	7.5	7.5	7.5	7.5	7.5	7.5
47										9.0	9.0	9.0	9.0	9.0	9.0	9.0	9.0	8.5	8.5	8.5	8.5	8.5	8.5	8.5	8.5	8.0	8.0	8.0	8.0	8.0	8.0	8.0	8.0	8.0
48										10.0	9.5	9.5	9.5	9.5	9.5	9.5	9.0	9.0	9.0	9.0	9.0	9.0	9.0	8.5	8.5	8.5	8.5	8.5	8.5	8.5	8.5	8.5	8.5	8.5
49										10.5	10.5	10.0	10.0	10.0	10.0	9.5	9.5	9.5	9.5	9.5	9.5	9.5	9.5	9.5	9.5	9.0	9.0	9.0	9.0	9.0	9.0	9.0	9.0	9.0
50										11.0	11.0	11.0	10.5	10.5	10.5	10.5	10.5	10.5	10.0	10.0	10.0	10.0	10.0	10.0	10.0	9.5	9.5	9.5	9.5	9.5	9.5	9.5	9.0	9.0
51										11.5	11.5	11.5	11.5	11.5	11.0	11.0	11.0	11.0	11.0	10.5	10.5	10.5	10.5	10.5	10.0	10.0	10.0	10.0	10.0	10.0	10.0	10.0	9.5	9.5
52										12.5	12.5	12.0	12.0	12.0	12.0	12.0	11.5	11.5	11.5	11.0	11.0	11.0	11.0	11.0	11.0	11.0	11.0	11.0	10.5	10.5	10.5	10.5	10.5	10.5
53										13.5	13.0	13.0	13.0	13.0	12.5	12.5	12.5	12.0	12.0	12.0	12.0	12.0	11.5	11.5	11.5	11.5	11.5	11.5	11.5	11.0	11.0	11.0	11.0	11.0
54										14.0	14.0	14.0	13.5	13.5	13.5	13.0	13.0	13.0	13.0	13.0	13.0	12.5	12.5	12.5	12.5	12.0	12.0	12.0	12.0	12.0	11.5	11.5	11.5	11.5
55										15.0	15.0	14.5	14.5	14.5	14.0	14.0	14.0	14.0	13.5	13.5	13.5	13.5	13.0	13.0	13.0	13.0	13.0	13.0	12.5	12.5	12.5	12.5	12.5	12.0
56										16.0	16.0	15.5	15.5	15.5	15.0	15.0	15.0	15.0	15.0	14.5	14.5	14.0	14.0	14.0	14.0	13.5	13.5	13.5	13.5	13.0	13.0	13.0	13.0	13.0
57										17.0	16.5	16.5	16.5	16.0	16.0	16.0	15.5	15.5	15.5	15.5	15.5	15.0	15.0	14.5	14.5	14.5	14.5	14.5	14.5	14.0	14.0	14.0	14.0	14.0
58										18.0	17.5	17.5	17.5	17.5	17.0	17.0	16.5	16.5	16.5	16.5	16.5	16.0	15.5	15.5	15.5	15.5	15.5	15.5	15.5	15.5	15.0	15.0	14.5	14.5
59										19.5	18.5	18.5	18.0	18.0	18.0	17.5	17.5	17.5	17.5	17.0	17.0	17.0	17.0	16.5	16.5	16.5	16.0	16.0	16.0	16.0	16.0	16.0	15.5	15.5
60										20.0	19.5	19.5	19.5	19.0	19.0	18.5	18.5	18.5	18.5	18.5	18.5	18.0	17.5	17.5	17.5	17.0	17.0	17.0	17.0	17.0	16.5	16.5	16.5	16.5
61										20.5	20.5	20.5	20.5	20.5	20.0	19.5	19.5	19.5	19.0	19.0	19.0	18.5	18.5	18.5	18.5	18.5	18.0	18.0	18.0	18.0	17.5	17.5	17.5	17.5
62										21.5	21.5	21.0	21.0	21.0	21.0	20.5	20.5	20.5	20.0	20.0	20.0	19.5	19.5	19.5	19.0	19.0	19.0	19.0	19.0	19.0	18.5	18.5	18.5	18.0

Not Analyzed

If 10 irradiated stainless steel rods are present in the reconstituted fuel assembly, add an additional 5.0 years of cooling time.

Note: The page that follows Table 1-4f provides the explanatory notes and limitations regarding the use of this table.

Table 1-4d
BWR Fuel Qualification Table for Zone 4 Fuel with 0.48 kW per Assembly for the NUHOMS®-61BTH DSC

(Minimum required years of cooling time after reactor core discharge)

Burn-Up, GWD/MTU	*Lattice Average Initial U-235 Enrichment, wt %*																																	
	0.9	1.2	1.5	2.0	2.1	2.2	2.3	2.4	2.5	2.6	2.7	2.8	2.9	3.0	3.1	3.2	3.3	3.4	3.5	3.6	3.7	3.8	3.9	4.0	4.1	4.2	4.3	4.4	4.5	4.6	4.7	4.8	4.9	5.0
10	3.0	3.0	3.0	3.0	3.0	3.0	3.0	3.0	3.0	3.0	3.0	3.0	3.0	3.0	3.0	3.0	3.0	3.0	3.0	3.0	3.0	3.0	3.0	3.0	3.0	3.0	3.0	3.0	3.0	3.0	3.0	3.0	3.0	3.0
15	3.0	3.0	3.0	3.0	3.0	3.0	3.0	3.0	3.0	3.0	3.0	3.0	3.0	3.0	3.0	3.0	3.0	3.0	3.0	3.0	3.0	3.0	3.0	3.0	3.0	3.0	3.0	3.0	3.0	3.0	3.0	3.0	3.0	3.0
20	3.5	3.5	3.0	3.0	3.0	3.0	3.0	3.0	3.0	3.0	3.0	3.0	3.0	3.0	3.0	3.0	3.0	3.0	3.0	3.0	3.0	3.0	3.0	3.0	3.0	3.0	3.0	3.0	3.0	3.0	3.0	3.0	3.0	3.0
23	3.5	3.5	3.0	3.0	3.0	3.0	3.0	3.0	3.0	3.0	3.0	3.0	3.0	3.0	3.0	3.0	3.0	3.0	3.0	3.0	3.0	3.0	3.0	3.0	3.0	3.0	3.0	3.0	3.0	3.0	3.0	3.0	3.0	3.0
25	3.5	3.5	3.5	3.5	3.0	3.0	3.0	3.0	3.0	3.0	3.0	3.0	3.0	3.0	3.0	3.0	3.0	3.0	3.0	3.0	3.0	3.0	3.0	3.0	3.0	3.0	3.0	3.0	3.0	3.0	3.0	3.0	3.0	3.0
28	4.0	4.0	4.0	3.5	3.5	3.5	3.5	3.5	3.5	3.5	3.5	3.5	3.5	3.5	3.5	3.5	3.5	3.5	3.5	3.5	3.5	3.5	3.5	3.5	3.5	3.5	3.5	3.5	3.5	3.5	3.5	3.5	3.5	3.5
30	4.5	4.0	4.0	4.0	4.0	4.0	4.0	4.0	4.0	4.0	4.0	4.0	3.5	3.5	3.5	3.5	3.5	3.5	3.5	3.5	3.5	3.5	3.5	3.5	3.5	3.5	3.5	3.5	3.5	3.5	3.5	3.5	3.5	3.5
32				4.5	4.5	4.0	4.0	4.0	4.0	4.0	4.0	4.0	4.0	4.0	4.0	4.0	4.0	4.0	4.0	4.0	4.0	4.0	4.0	4.0	4.0	4.0	4.0	4.0	4.0	4.0	4.0	3.5	3.5	3.5
34				4.5	4.5	4.5	4.5	4.5	4.5	4.5	4.5	4.5	4.5	4.5	4.5	4.5	4.5	4.5	4.5	4.0	4.0	4.0	4.0	4.0	4.0	4.0	4.0	4.0	4.0	4.0	4.0	4.0	4.0	4.0
36				5.0	5.0	4.5	4.5	4.5	4.5	4.5	4.5	4.5	4.5	4.5	4.5	4.5	4.5	4.5	4.5	4.5	4.5	4.5	4.5	4.5	4.5	4.5	4.5	4.5	4.5	4.5	4.5	4.5	4.5	4.5
38				5.0	5.0	5.0	5.0	5.0	5.0	5.0	5.0	5.0	5.0	5.0	5.0	5.0	5.0	5.0	4.5	4.5	4.5	4.5	4.5	4.5	4.5	4.5	4.5	4.5	4.5	4.5	4.5	4.5	4.5	4.5
39				5.5	5.5	5.5	5.5	5.5	5.0	5.0	5.0	5.0	5.0	5.0	5.0	5.0	5.0	5.0	5.0	5.0	5.0	5.0	5.0	5.0	5.0	5.0	4.5	4.5	4.5	4.5	4.5	4.5	4.5	4.5
40										5.5	5.0	5.0	5.0	5.0	5.0	5.0	5.0	5.0	5.0	5.0	5.0	5.0	5.0	5.0	5.0	5.0	5.0	5.0	5.0	5.0	5.0	5.0	5.0	5.0
41										5.5	5.5	5.5	5.5	5.5	5.5	5.5	5.5	5.0	5.0	5.0	5.0	5.0	5.0	5.0	5.0	5.0	5.0	5.0	5.0	5.0	5.0	5.0	5.0	5.0
42										*6.0*	*5.5*	*5.5*	*5.5*	*5.5*	*5.5*	*5.5*	*5.5*	*5.5*	*5.5*	*5.5*	*5.5*	*5.5*	*5.5*	*5.0*	*5.0*	*5.0*	*5.0*	*5.0*	*5.0*	*5.0*	*5.0*	*5.0*	*5.0*	*5.0*
43										*6.0*	*6.0*	*6.0*	*6.0*	*6.0*	*6.0*	*6.0*	*5.5*	*5.5*	*5.5*	*5.5*	*5.5*	*5.5*	*5.5*	*5.5*	*5.5*	*5.5*	*5.5*	*5.5*	*5.5*	*5.5*	*5.5*	*5.5*	*5.5*	*5.5*
44										*6.0*	*6.0*	*6.0*	*6.0*	*6.0*	*6.0*	*6.0*	*6.0*	*6.0*	*6.0*	*6.0*	*6.0*	*6.0*	*5.5*	*5.5*	*5.5*	*5.5*	*5.5*	*5.5*	*5.5*	*5.5*	*5.5*	*5.5*	*5.5*	*5.5*
45										6.5	6.5	6.0	6.0	6.0	6.0	6.0	6.0	6.0	6.0	6.0	6.0	6.0	6.0	6.0	6.0	6.0	6.0	6.0	6.0	6.0	5.5	5.5	5.5	5.5
46										*6.5*	*6.5*	*6.5*	*6.5*	*6.5*	*6.5*	*6.5*	*6.0*	*6.0*	*6.0*	*6.0*	*6.0*	*6.0*	*6.0*	*6.0*	*6.0*	*6.0*	*6.0*	*6.0*	6.0	6.0	6.0	6.0	6.0	6.0
47										*7.0*	*7.0*	*7.0*	*7.0*	*6.5*	*6.5*	*6.5*	*6.5*	*6.5*	*6.5*	*6.5*	*6.5*	*6.5*	*6.5*	*6.0*	*6.0*	*6.0*	*6.0*	*6.0*	*6.0*	*6.0*	*6.0*	*6.0*	*6.0*	*6.0*
48										*7.0*	*7.0*	*7.0*	*7.0*	*7.0*	*7.0*	*7.0*	*7.0*	*7.0*	*7.0*	*6.5*	*6.5*	*6.5*	*6.5*	*6.5*	*6.5*	*6.5*	*6.5*	*6.5*	*6.5*	*6.5*	*6.5*	*6.0*	*6.0*	*6.0*
49										*7.5*	*7.5*	*7.0*	*7.0*	*7.0*	*7.0*	*7.0*	*7.0*	*7.0*	*7.0*	*7.0*	*7.0*	*7.0*	*7.0*	*7.0*	*7.0*	*6.5*	*6.5*	*6.5*	*6.5*	*6.5*	*6.5*	*6.5*	*6.5*	*6.5*
50										7.5	7.5	7.5	7.5	7.5	7.5	7.5	7.5	7.5	7.5	7.0	7.0	7.0	7.0	7.0	7.0	7.0	7.0	7.0	7.0	7.0	6.5	6.5	6.5	6.5
51										8.0	8.0	8.0	8.0	8.0	7.5	7.5	7.5	7.5	7.5	7.5	7.5	7.5	7.5	7.5	7.5	7.0	7.0	7.0	7.0	7.0	7.0	7.0	7.0	7.0
52										8.5	8.5	8.5	8.5	8.0	8.0	8.0	8.0	8.0	8.0	7.5	7.5	7.5	7.5	7.5	7.5	7.5	7.5	7.5	7.5	7.0	7.0	7.0	7.0	7.0
53										9.0	9.0	9.0	8.5	8.5	8.5	8.5	8.5	8.0	8.0	8.0	8.0	8.0	8.0	8.0	8.0	8.0	7.5	7.5	7.5	7.5	7.5	7.5	7.5	7.5
54										9.5	9.0	9.0	9.0	9.0	9.0	9.0	9.0	8.5	8.5	8.5	8.5	8.5	8.5	8.0	8.0	8.0	8.0	8.0	8.0	8.0	8.0	8.0	8.0	7.5
55										10.0	9.5	9.5	9.5	9.5	9.5	9.5	9.0	9.0	9.0	9.0	9.0	8.5	8.5	8.5	8.5	8.5	8.5	8.5	8.0	8.0	8.0	8.0	8.0	8.0
56										10.5	10.0	10.0	10.0	10.0	9.5	9.5	9.5	9.5	9.5	9.5	9.5	9.0	9.0	9.0	9.0	9.0	9.0	9.0	9.0	8.5	8.5	8.5	8.5	8.5
57										11.0	10.5	10.5	10.5	10.5	10.5	10.0	10.0	10.0	10.0	10.0	10.0	9.5	9.5	9.5	9.5	9.5	9.0	9.0	9.0	9.0	9.0	9.0	9.0	9.0
58										11.5	11.5	11.0	11.0	11.0	11.0	11.0	10.5	10.5	10.5	10.5	10.5	10.0	10.0	10.0	10.0	9.5	9.5	9.5	9.5	9.5	9.5	9.5	9.0	9.0
59										12.0	12.0	12.0	11.5	11.5	11.5	11.0	11.0	11.0	11.0	11.0	10.5	10.5	10.5	10.5	10.5	10.5	10.0	10.0	10.0	10.0	10.0	10.0	9.5	9.5
60										13.0	12.5	12.5	12.5	12.0	12.0	12.0	12.0	11.5	11.5	11.5	11.5	11.5	11.0	11.0	11.0	10.5	10.5	10.5	10.5	10.5	10.5	10.0	10.0	10.0
61										13.5	13.5	13.0	13.0	13.0	12.5	12.5	12.5	12.5	12.0	12.0	12.0	12.0	11.5	11.5	11.5	11.5	11.5	11.0	11.0	11.0	11.0	11.0	11.0	10.5
62										14.0	14.0	14.0	14.0	13.5	13.5	13.0	13.0	13.0	12.5	12.5	12.5	12.5	12.5	12.0	12.0	12.0	12.0	12.0	11.5	11.5	11.5	11.5	11.0	11.0

Not Analyzed

If 10 irradiated stainless steel rods are present in the reconstituted fuel assembly, add an additional 5.0 years of cooling time.

Note: The page that follows Table 1-4f provides the explanatory notes and limitations regarding the use of this table.

Table 1-4e
BWR Fuel Qualification Table for Zone 5 Fuel with 0.54 kW per Assembly for the NUHOMS®-61BTH DSC
(Minimum required years of cooling time after reactor core discharge)

Burn-Up, GWD/MTU	*Lattice Average Initial U-235 Enrichment, wt %*																																	
	0.9	1.2	1.5	2.0	2.1	2.2	2.3	2.4	2.5	2.6	2.7	2.8	2.9	3.0	3.1	3.2	3.3	3.4	3.5	3.6	3.7	3.8	3.9	4.0	4.1	4.2	4.3	4.4	4.5	4.6	4.7	4.8	4.9	5.0
10	3.0	3.0	3.0	3.0	3.0	3.0	3.0	3.0	3.0	3.0	3.0	3.0	3.0	3.0	3.0	3.0	3.0	3.0	3.0	3.0	3.0	3.0	3.0	3.0	3.0	3.0	3.0	3.0	3.0	3.0	3.0	3.0	3.0	3.0
15	3.0	3.0	3.0	3.0	3.0	3.0	3.0	3.0	3.0	3.0	3.0	3.0	3.0	3.0	3.0	3.0	3.0	3.0	3.0	3.0	3.0	3.0	3.0	3.0	3.0	3.0	3.0	3.0	3.0	3.0	3.0	3.0	3.0	3.0
20	3.0	3.0	3.0	3.0	3.0	3.0	3.0	3.0	3.0	3.0	3.0	3.0	3.0	3.0	3.0	3.0	3.0	3.0	3.0	3.0	3.0	3.0	3.0	3.0	3.0	3.0	3.0	3.0	3.0	3.0	3.0	3.0	3.0	3.0
23	3.0	3.0	3.0	3.0	3.0	3.0	3.0	3.0	3.0	3.0	3.0	3.0	3.0	3.0	3.0	3.0	3.0	3.0	3.0	3.0	3.0	3.0	3.0	3.0	3.0	3.0	3.0	3.0	3.0	3.0	3.0	3.0	3.0	3.0
25	3.0	3.0	3.0	3.0	3.0	3.0	3.0	3.0	3.0	3.0	3.0	3.0	3.0	3.0	3.0	3.0	3.0	3.0	3.0	3.0	3.0	3.0	3.0	3.0	3.0	3.0	3.0	3.0	3.0	3.0	3.0	3.0	3.0	3.0
28	3.5	3.5	3.5	3.5	3.5	3.5	3.5	3.5	3.0	3.0	3.0	3.0	3.0	3.0	3.0	3.0	3.0	3.0	3.0	3.0	3.0	3.0	3.0	3.0	3.0	3.0	3.0	3.0	3.0	3.0	3.0	3.0	3.0	3.0
30	4.0	4.0	4.0	3.5	3.5	3.5	3.5	3.5	3.5	3.5	3.5	3.5	3.5	3.5	3.5	3.5	3.5	3.5	3.5	3.5	3.5	3.5	3.5	3.5	3.5	3.5	3.5	3.5	3.5	3.5	3.5	3.5	3.5	3.5
32				4.0	4.0	4.0	3.5	3.5	3.5	3.5	3.5	3.5	3.5	3.5	3.5	3.5	3.5	3.5	3.5	3.5	3.5	3.5	3.5	3.5	3.5	3.5	3.5	3.5	3.5	3.5	3.5	3.5	3.5	3.5
34				4.0	4.0	4.0	4.0	4.0	4.0	4.0	4.0	4.0	4.0	4.0	4.0	4.0	4.0	4.0	4.0	4.0	3.5	3.5	3.5	3.5	3.5	3.5	3.5	3.5	3.5	3.5	3.5	3.5	3.5	3.5
36				4.5	4.5	4.5	4.5	4.5	4.5	4.5	4.5	4.0	4.0	4.0	4.0	4.0	4.0	4.0	4.0	4.0	4.0	4.0	4.0	4.0	4.0	4.0	4.0	4.0	4.0	4.0	4.0	4.0	4.0	4.0
38				4.5	4.5	4.5	4.5	4.5	4.5	4.5	4.5	4.5	4.5	4.5	4.5	4.5	4.5	4.5	4.5	4.5	4.5	4.5	4.5	4.5	4.5	4.0	4.0	4.0	4.0	4.0	4.0	4.0	4.0	4.0
39				5.0	4.5	4.5	4.5	4.5	4.5	4.5	4.5	4.5	4.5	4.5	4.5	4.5	4.5	4.5	4.5	4.5	4.5	4.5	4.5	4.5	4.5	4.5	4.5	4.5	4.5	4.5	4.5	4.5	4.5	4.5
40										4.5	4.5	4.5	4.5	4.5	4.5	4.5	4.5	4.5	4.5	4.5	4.5	4.5	4.5	4.5	4.5	4.5	4.5	4.5	4.5	4.5	4.5	4.5	4.5	4.5
41										5.0	5.0	5.0	5.0	5.0	5.0	4.5	4.5	4.5	4.5	4.5	4.5	4.5	4.5	4.5	4.5	4.5	4.5	4.5	4.5	4.5	4.5	4.5	4.5	4.5
42										5.0	5.0	5.0	5.0	5.0	5.0	5.0	5.0	5.0	5.0	5.0	4.5	4.5	4.5	4.5	4.5	4.5	4.5	4.5	4.5	4.5	4.5	4.5	4.5	4.5
43										5.5	5.5	5.0	5.0	5.0	5.0	5.0	5.0	5.0	5.0	5.0	5.0	5.0	5.0	5.0	5.0	5.0	5.0	5.0	4.5	4.5	4.5	4.5	4.5	4.5
44										5.5	5.5	5.5	5.5	5.5	5.5	5.5	5.5	5.0	5.0	5.0	5.0	5.0	5.0	5.0	5.0	5.0	5.0	5.0	5.0	5.0	5.0	5.0	5.0	5.0
45										5.5	5.5	5.5	5.5	5.5	5.5	5.5	5.5	5.5	5.5	5.0	5.0	5.0	5.0	5.0	5.0	5.0	5.0	5.0	5.0	5.0	5.0	5.0	5.0	5.0
46										6.0	6.0	5.5	5.5	5.5	5.5	5.5	5.5	5.5	5.5	5.5	5.5	5.5	5.5	5.5	5.5	5.5	5.0	5.0	5.0	5.0	5.0	5.0	5.0	5.0
47										6.0	6.0	6.0	6.0	6.0	6.0	6.0	6.0	5.5	5.5	5.5	5.5	5.5	5.5	5.5	5.5	5.5	5.5	5.5	5.5	5.5	5.5	5.5	5.5	5.0
48										6.0	6.0	6.0	6.0	6.0	6.0	6.0	6.0	6.0	6.0	6.0	6.0	5.5	5.5	5.5	5.5	5.5	5.5	5.5	5.5	5.5	5.5	5.5	5.5	5.5
49										6.5	6.5	6.0	6.0	6.0	6.0	6.0	6.0	6.0	6.0	6.0	6.0	6.0	6.0	6.0	6.0	6.0	6.0	6.0	6.0	6.0	5.5	5.5	5.5	5.5
50										6.5	6.5	6.5	6.5	6.5	6.5	6.5	6.5	6.5	6.5	6.0	6.0	6.0	6.0	6.0	6.0	6.0	6.0	6.0	6.0	6.0	6.0	6.0	6.0	5.5
51										7.0	7.0	6.5	6.5	6.5	6.5	6.5	6.5	6.5	6.5	6.5	6.5	6.5	6.5	6.5	6.0	6.0	6.0	6.0	6.0	6.0	6.0	6.0	6.0	6.0
52										7.0	7.0	7.0	7.0	7.0	7.0	6.5	6.5	6.5	6.5	6.5	6.5	6.5	6.5	6.5	6.5	6.5	6.5	6.5	6.5	6.5	6.5	6.5	6.0	6.0
53										7.5	7.5	7.5	7.5	7.0	7.0	7.0	7.0	7.0	7.0	7.0	6.5	6.5	6.5	6.5	6.5	6.5	6.5	6.5	6.5	6.5	6.5	6.5	6.5	6.5
54										8.0	7.5	7.5	7.5	7.5	7.5	7.5	7.0	7.0	7.0	7.0	7.0	7.0	7.0	7.0	7.0	7.0	6.5	6.5	6.5	6.5	6.5	6.5	6.5	6.5
55										8.0	8.0	8.0	8.0	8.0	7.5	7.5	7.5	7.5	7.5	7.5	7.5	7.0	7.0	7.0	7.0	7.0	7.0	7.0	7.0	7.0	7.0	7.0	7.0	6.5
56										8.5	8.5	8.0	8.0	8.0	8.0	8.0	8.0	7.5	7.5	7.5	7.5	7.5	7.5	7.5	7.5	7.5	7.0	7.0	7.0	7.0	7.0	7.0	7.0	7.0
57										9.0	8.5	8.5	8.5	8.5	8.5	8.0	8.0	8.0	8.0	8.0	8.0	8.0	8.0	7.5	7.5	7.5	7.5	7.5	7.5	7.5	7.5	7.5	7.5	7.5
58										9.0	9.0	9.0	9.0	8.5	8.5	8.5	8.5	8.5	8.5	8.5	8.5	8.0	8.0	8.0	8.0	8.0	8.0	8.0	8.0	8.0	7.5	7.5	7.5	7.5
59										9.5	9.5	9.5	9.5	9.0	9.0	9.0	9.0	9.0	8.5	8.5	8.5	8.5	8.5	8.5	8.5	8.0	8.0	8.0	8.0	8.0	8.0	8.0	8.0	8.0
60										10.0	10.0	10.0	9.5	9.5	9.5	9.5	9.0	9.0	9.0	9.0	9.0	9.0	8.5	8.5	8.5	8.5	8.5	8.5	8.5	8.5	8.5	8.5	8.5	8.0
61										10.5	10.5	10.5	10.0	10.0	10.0	10.0	10.0	9.5	9.5	9.5	9.5	9.5	9.0	9.0	9.0	9.0	9.0	9.0	8.5	8.5	8.5	8.5	8.5	8.5
62										11.0	11.0	10.5	10.5	10.5	10.5	10.5	10.0	10.0	10.0	10.0	10.0	9.5	9.5	9.5	9.5	9.5	9.0	9.0	9.0	9.0	9.0	9.0	9.0	9.0

Not Analyzed

If 10 irradiated stainless steel rods are present in the reconstituted fuel assembly, add an additional 5.0 years of cooling time

Note: The page that follows Table 1-4f provides the explanatory notes and limitations regarding the use of this table.

Table 1-4f
BWR Fuel Qualification Table for Zone 6 Fuel with 0.7 kW per Assembly for the NUHOMS®-61BTH DSC
(Minimum required years of cooling time after reactor core discharge)

Burn-Up, GWD/MTU	*Lattice Average Initial U-235 Enrichment, wt %*																																	
	0.9	1.2	1.5	2.0	2.1	2.2	2.3	2.4	2.5	2.6	2.7	2.8	2.9	3.0	3.1	3.2	3.3	3.4	3.5	3.6	3.7	3.8	3.9	4.0	4.1	4.2	4.3	4.4	4.5	4.6	4.7	4.8	4.9	5.0
10	3.0	3.0	3.0	3.0	3.0	3.0	3.0	3.0	3.0	3.0	3.0	3.0	3.0	3.0	3.0	3.0	3.0	3.0	3.0	3.0	3.0	3.0	3.0	3.0	3.0	3.0	3.0	3.0	3.0	3.0	3.0	3.0	3.0	3.0
15	3.0	3.0	3.0	3.0	3.0	3.0	3.0	3.0	3.0	3.0	3.0	3.0	3.0	3.0	3.0	3.0	3.0	3.0	3.0	3.0	3.0	3.0	3.0	3.0	3.0	3.0	3.0	3.0	3.0	3.0	3.0	3.0	3.0	3.0
20	3.0	3.0	3.0	3.0	3.0	3.0	3.0	3.0	3.0	3.0	3.0	3.0	3.0	3.0	3.0	3.0	3.0	3.0	3.0	3.0	3.0	3.0	3.0	3.0	3.0	3.0	3.0	3.0	3.0	3.0	3.0	3.0	3.0	3.0
23	3.0	3.0	3.0	3.0	3.0	3.0	3.0	3.0	3.0	3.0	3.0	3.0	3.0	3.0	3.0	3.0	3.0	3.0	3.0	3.0	3.0	3.0	3.0	3.0	3.0	3.0	3.0	3.0	3.0	3.0	3.0	3.0	3.0	3.0
25	3.0	3.0	3.0	3.0	3.0	3.0	3.0	3.0	3.0	3.0	3.0	3.0	3.0	3.0	3.0	3.0	3.0	3.0	3.0	3.0	3.0	3.0	3.0	3.0	3.0	3.0	3.0	3.0	3.0	3.0	3.0	3.0	3.0	3.0
28	3.5	3.5	3.5	3.5	3.5	3.5	3.0	3.0	3.0	3.0	3.0	3.0	3.0	3.0	3.0	3.0	3.0	3.0	3.0	3.0	3.0	3.0	3.0	3.0	3.0	3.0	3.0	3.0	3.0	3.0	3.0	3.0	3.0	3.0
30	4.0	4.0	3.5	3.5	3.5	3.5	3.5	3.5	3.5	3.5	3.5	3.5	3.5	3.5	3.5	3.5	3.5	3.5	3.5	3.5	3.5	3.5	3.5	3.5	3.5	3.5	3.5	3.5	3.5	3.5	3.5	3.5	3.0	3.0
32				4.0	3.5	3.5	3.5	3.5	3.5	3.5	3.5	3.5	3.5	3.5	3.5	3.5	3.5	3.5	3.5	3.5	3.5	3.5	3.5	3.5	3.5	3.5	3.5	3.5	3.5	3.5	3.5	3.5	3.5	3.5
34				4.0	4.0	4.0	4.0	4.0	4.0	4.0	4.0	4.0	4.0	4.0	4.0	4.0	4.0	3.5	3.5	3.5	3.5	3.5	3.5	3.5	3.5	3.5	3.5	3.5	3.5	3.5	3.5	3.5	3.5	3.5
36				4.5	4.5	4.5	4.5	4.5	4.5	4.0	4.0	4.0	4.0	4.0	4.0	4.0	4.0	4.0	4.0	4.0	4.0	4.0	4.0	4.0	4.0	4.0	4.0	4.0	4.0	4.0	4.0	4.0	4.0	4.0
38				4.5	4.5	4.5	4.5	4.5	4.5	4.5	4.5	4.5	4.5	4.5	4.5	4.5	4.5	4.5	4.5	4.5	4.5	4.5	4.0	4.0	4.0	4.0	4.0	4.0	4.0	4.0	4.0	4.0	4.0	4.0
39				4.5	4.5	4.5	4.5	4.5	4.5	4.5	4.5	4.5	4.5	4.5	4.5	4.5	4.5	4.5	4.5	4.5	4.5	4.5	4.5	4.5	4.5	4.5	4.5	4.5	4.5	4.5	4.0	4.0	4.0	4.0
40										4.5	4.5	4.5	4.5	4.5	4.5	4.5	4.5	4.5	4.5	4.5	4.5	4.5	4.5	4.5	4.5	4.5	4.5	4.5	4.5	4.5	4.5	4.5	4.5	4.5
41										5.0	5.0	5.0	4.5	4.5	4.5	4.5	4.5	4.5	4.5	4.5	4.5	4.5	4.5	4.5	4.5	4.5	4.5	4.5	4.5	4.5	4.5	4.5	4.5	4.5
42										5.0	5.0	5.0	5.0	5.0	5.0	5.0	5.0	5.0	4.5	4.5	4.5	4.5	4.5	4.5	4.5	4.5	4.5	4.5	4.5	4.5	4.5	4.5	4.5	4.5
43										5.0	5.0	5.0	5.0	5.0	5.0	5.0	5.0	5.0	5.0	5.0	5.0	5.0	5.0	5.0	4.5	4.5	4.5	4.5	4.5	4.5	4.5	4.5	4.5	4.5
44										5.5	5.5	5.5	5.5	5.5	5.0	5.0	5.0	5.0	5.0	5.0	5.0	5.0	5.0	5.0	5.0	5.0	5.0	5.0	5.0	5.0	5.0	5.0	5.0	4.5
45										5.5	5.5	5.5	5.5	5.5	5.5	5.5	5.0	5.0	5.0	5.0	5.0	5.0	5.0	5.0	5.0	5.0	5.0	5.0	5.0	5.0	5.0	5.0	5.0	5.0
46										5.5	5.5	5.5	5.5	5.5	5.5	5.5	5.5	5.5	5.5	5.5	5.5	5.0	5.0	5.0	5.0	5.0	5.0	5.0	5.0	5.0	5.0	5.0	5.0	5.0
47										6.0	6.0	6.0	6.0	6.0	5.5	5.5	5.5	5.5	5.5	5.5	5.5	5.5	5.5	5.5	5.5	5.5	5.5	5.5	5.0	5.0	5.0	5.0	5.0	5.0
48										6.0	6.0	6.0	6.0	6.0	6.0	6.0	6.0	6.0	6.0	5.5	5.5	5.5	5.5	5.5	5.5	5.5	5.5	5.5	5.5	5.5	5.5	5.5	5.5	5.5
49										6.0	6.0	6.0	6.0	6.0	6.0	6.0	6.0	6.0	6.0	6.0	6.0	6.0	6.0	6.0	6.0	6.0	5.5	5.5	5.5	5.5	5.5	5.5	5.5	5.5
50										6.5	6.5	6.5	6.5	6.5	6.5	6.5	6.0	6.0	6.0	6.0	6.0	6.0	6.0	6.0	6.0	6.0	6.0	6.0	5.5	5.5	5.5	5.5	5.5	5.5
51										6.5	6.5	6.5	6.5	6.5	6.5	6.5	6.5	6.5	6.5	6.5	6.5	6.0	6.0	6.0	6.0	6.0	6.0	6.0	6.0	6.0	6.0	6.0	6.0	6.0
52										7.0	7.0	7.0	7.0	6.5	6.5	6.5	6.5	6.5	6.5	6.5	6.5	6.5	6.5	6.5	6.5	6.5	6.5	6.0	6.0	6.0	6.0	6.0	6.0	6.0
53										7.5	7.0	7.0	7.0	7.0	7.0	7.0	7.0	7.0	6.5	6.5	6.5	6.5	6.5	6.5	6.5	6.5	6.5	6.5	6.5	6.5	6.5	6.5	6.5	6.5
54										7.5	7.5	7.5	7.5	7.0	7.0	7.0	7.0	7.0	7.0	7.0	7.0	7.0	7.0	7.0	7.0	7.0	7.0	6.5	6.5	6.5	6.5	6.5	6.5	6.5
55										8.0	8.0	7.5	7.5	7.5	7.5	7.5	7.5	7.5	7.0	7.0	7.0	7.0	7.0	7.0	7.0	7.0	7.0	7.0	6.5	6.5	6.5	6.5	6.5	6.5
56										8.0	8.0	8.0	8.0	8.0	7.5	7.5	7.5	7.5	7.5	7.5	7.5	7.5	7.5	7.5	7.5	7.5	7.5	7.0	7.0	7.0	7.0	7.0	7.0	7.0
57										8.5	8.5	8.5	8.0	8.0	8.0	8.0	8.0	8.0	8.0	8.0	8.0	8.0	8.0	7.5	7.5	7.5	7.5	7.5	7.5	7.5	7.5	7.0	7.0	7.0
58										9.0	8.5	8.5	8.5	8.5	8.5	8.5	8.5	8.5	8.0	8.0	8.0	8.0	8.0	8.0	8.0	7.5	7.5	7.5	7.5	7.5	7.5	7.5	7.5	7.5
59										9.5	9.0	9.0	9.0	9.0	9.0	8.5	8.5	8.5	8.5	8.5	8.5	8.5	8.5	8.0	8.0	8.0	8.0	8.0	8.0	8.0	8.0	8.0	7.5	7.5
60										10.0	9.5	9.5	9.5	9.0	9.0	9.0	9.0	9.0	9.0	9.0	9.0	8.5	8.5	8.5	8.5	8.5	8.5	8.5	8.0	8.0	8.0	8.0	8.0	8.0
61										10.0	10.0	10.0	10.0	10.0	9.5	9.5	9.5	9.5	9.5	9.0	9.0	9.0	9.0	8.5	8.5	8.5	8.5	8.5	8.5	8.5	8.5	8.5	8.5	8.5
62										10.5	10.5	10.5	10.5	10.5	10.0	10.0	10.0	10.0	10.0	9.5	9.5	9.5	9.5	9.0	9.0	9.0	9.0	9.0	9.0	9.0	9.0	9.0	8.5	8.5

Not Analyzed

If 10 irradiated stainless steel rods are present in the reconstituted fuel assembly, add an additional 5.0 years of cooling time.

Note: The page that follows Table 1-4f provides the explanatory notes and limitations regarding the use of this table.

Notes: Tables 1-4a through 1-4f:

- Burnup = Assembly Average burnup.
- Use burnup and enrichment to lookup minimum cooling time in years. Licensee is responsible for ensuring that uncertainties in fuel enrichment and burnup are correctly accounted for during fuel qualification.
- Round burnup UP to next higher entry, round enrichments DOWN to next lower entry.
- Fuel with an lattice average initial enrichment less than 0.9 (or less than the minimum provided above for each burnup) or greater than 5.0 wt.% U-235 is unacceptable for storage.
- Fuel with a burnup greater than 62 GWd/MTU is unacceptable for storage.
- Fuel with a burnup less than 10 GWd/MTU is acceptable for storage after 3-years cooling.
- See Figure 1-17 through Figure 1-24 for a description of the zones.
- For reconstituted fuel assemblies with UO_2 rods and/or Zr rods or Zr pellets and/or stainless steel rods, use the assembly average equivalent enrichment to determine the minimum cooling time.
- The cooling times for damaged and intact assemblies are identical.
- *Example*: An intact fuel assembly, with a decay heat load of 0.22 kW or less, an initial enrichment of 3.65 wt. % U-235 and a burnup of 41.5 GWd/MTU is acceptable for storage after a 24 year cooling time as defined by 3.6 wt. % U-235 (rounding down) and 42 GWd/MTU (rounding up) in Table 1-4a.

Table 1-5a
PWR Fuel Qualification Table for Zone 1 Fuel with 0.6 kW per Assembly for the NUHOMS®-32PTH1 DSC (Fuel without CCs)
(Minimum required years of cooling time after reactor core discharge)

Burn Up, GWD/MTU	Maximum Assembly Average Initial U-235 Enrichment, wt. %																																															
	0.7	0.8	0.9	1.0	1.1	1.2	1.3	1.4	1.5	1.6	1.7	1.8	1.9	2.0	2.1	2.2	2.3	2.4	2.5	2.6	2.7	2.8	2.9	3.0	3.1	3.2	3.3	3.4	3.5	3.6	3.7	3.8	3.9	4.0	4.1	4.2	4.3	4.4	4.5	4.6	4.7	4.8	4.9	5.0
10	3.0	3.0	3.0	3.0	3.0	3.0	3.0	3.0	3.0	3.0	3.0	3.0	3.0	3.0	3.0	3.0	3.0	3.0	3.0	3.0	3.0	3.0	3.0	3.0	3.0	3.0	3.0	3.0	3.0	3.0	3.0	3.0	3.0	3.0	3.0	3.0	3.0	3.0	3.0	3.0	3.0	3.0	3.0	3.0
15	3.5	3.5	3.5	3.5	3.5	3.5	3.5	3.5	3.5	3.5	3.5	3.5	3.5	3.0	3.0	3.0	3.0	3.0	3.0	3.0	3.0	3.0	3.0	3.0	3.0	3.0	3.0	3.0	3.0	3.0	3.0	3.0	3.0	3.0	3.0	3.0	3.0	3.0	3.0	3.0	3.0	3.0	3.0	3.0
20	5.0	4.5	4.5	4.5	4.5	4.5	4.5	4.5	4.5	4.5	4.5	4.5	4.5	4.5	4.5	4.5	4.5	4.5	4.5	4.0	4.0	4.0	4.0	4.0	4.0	4.0	4.0	4.0	4.0	4.0	4.0	4.0	4.0	4.0	4.0	4.0	4.0	4.0	4.0	4.0	4.0	4.0	4.0	4.0
25									6.0	6.0	6.0	6.0	6.0	6.0	6.0	5.5	5.5	5.5	5.5	5.5	5.5	5.5	5.5	5.5	5.5	5.5	5.5	5.5	5.5	5.5	5.5	5.5	5.5	5.5	5.5	5.5	5.5	5.5	5.5	5.0	5.0	5.0	5.0	5.0
28									7.5	7.0	7.0	7.0	7.0	7.0	7.0	7.0	7.0	7.0	7.0	7.0	6.5	6.5	6.5	6.5	6.5	6.5	6.5	6.5	6.5	6.5	6.5	6.5	6.5	6.5	6.5	6.5	6.5	6.5	6.5	6.5	6.5	6.0	6.0	6.0
30									8.5	8.5	8.5	8.0	8.0	8.0	8.0	8.0	8.0	8.0	8.0	8.0	8.0	8.0	8.0	7.5	7.5	7.5	7.5	7.5	7.5	7.5	7.5	7.5	7.5	7.5	7.5	7.0	7.0	7.0	7.0	7.0	7.0	7.0	7.0	7.0
32									10.0	10.0	10.0	9.5	9.5	9.5	9.5	9.5	9.5	9.0	9.0	9.0	9.0	9.0	9.0	9.0	9.0	8.5	8.5	8.5	8.5	8.5	8.5	8.5	8.5	8.5	8.5	8.5	8.5	8.5	8.5	8.5	8.5	8.0	8.0	8.0
34									12.0	12.0	11.5	11.5	11.5	11.5	11.5	11.0	11.0	11.0	11.0	11.0	11.0	11.0	11.0	10.5	10.5	10.5	10.5	10.0	10.0	10.0	10.0	10.0	10.0	10.0	10.0	10.0	10.0	10.0	10.0	10.0	9.5	9.5	9.5	9.5
36									14.5	14.5	14.0	14.0	14.0	14.0	13.5	13.5	13.5	13.0	13.0	13.0	13.0	13.0	12.5	12.5	12.5	12.5	12.5	12.5	12.0	12.0	12.0	12.0	12.0	12.0	12.0	12.0	11.5	11.5	11.5	11.5	11.5	11.5	11.5	11.5
38									17.5	17.0	17.0	17.0	17.0	17.0	16.0	16.0	16.0	16.0	16.0	16.0	16.0	16.0	15.0	15.0	15.0	14.5	14.5	14.5	14.5	14.5	14.5	14.0	14.0	14.0	14.0	14.0	14.0	14.0	14.0	14.0	14.0	14.0	14.0	13.5
39									18.5	18.5	18.5	18.0	18.0	18.0	18.0	18.0	18.0	17.0	17.0	17.0	16.5	16.5	16.5	16.5	16.5	16.5	16.0	16.0	16.0	15.5	15.5	15.5	15.5	15.5	15.5	15.5	15.5	15.5	15.5	15.5	15.5	15.0	15.0	15.0
40									20.0	20.0	20.0	20.0	20.0	20.0	19.0	19.0	18.5	18.5	18.5	18.5	18.5	18.5	17.5	17.5	17.5	17.5	17.5	17.0	17.0	17.0	17.0	17.0	17.0	17.0	17.0	17.0	17.0	17.0	17.0	17.0	17.0	17.0	16.0	16.0
41									22.0	21.5	21.5	21.0	21.0	20.5	20.5	20.0	20.0	20.0	20.0	20.0	19.5	19.5	19.5	19.0	19.0	19.0	18.5	18.5	18.5	18.5	18.5	18.5	18.5	18.0	18.0	18.0	18.0	18.0	18.0	18.0	18.0	18.0	18.0	18.0
42																					21.0	21.0	20.5	20.5	20.5	20.5	20.0	20.0	20.0	20.0	20.0	20.0	19.5	19.5	19.5	19.5	19.5	19.5	19.5	19.5	19.5	19.5	19.5	19.5
43																					22.5	22.5	22.0	22.0	22.0	21.5	21.5	21.5	21.5	21.5	21.5	21.0	21.0	21.0	21.0	21.0	21.0	21.0	21.0	21.0	21.0	21.0	21.0	20.0
44																					24.0	23.5	23.5	23.5	23.0	23.0	23.0	23.0	23.0	23.0	22.5	22.5	22.5	22.5	22.0	22.0	22.0	22.0	22.0	22.0	22.0	22.0	22.0	22.0
45																					25.5	25.0	25.0	25.0	24.5	24.5	24.5	24.5	24.5	24.0	24.0	24.0	24.0	23.5	23.5	23.5	23.5	23.5	23.5	23.5	23.5	23.5	23.5	23.5
46																					27.0	26.5	26.5	26.0	26.0	26.0	26.0	26.0	26.0	25.5	25.5	25.5	25.5	25.0	25.0	25.0	25.0	25.0	25.0	25.0	25.0	25.0	25.0	24.5
47																					28.0	28.0	28.0	27.5	27.5	27.5	27.5	27.0	27.0	27.0	27.0	27.0	26.5	26.5	26.5	26.5	26.5	26.5	26.5	26.5	26.5	26.5	26.5	26.5
48																					29.5	29.5	29.5	29.0	29.0	29.0	28.5	28.5	28.5	28.5	28.5	28.5	28.0	28.0	28.0	28.0	28.0	28.0	28.0	28.0	28.0	28.0	28.0	28.0
49																								30.5	30.5	30.0	30.0	30.0	30.0	30.0	30.0	29.5	29.5	29.5	29.0	29.0	29.0	29.0	29.0	29.0	29.0	29.0	29.0	29.0
50																								31.5	31.5	31.5	31.5	31.0	31.0	31.0	31.0	31.0	31.0	31.0	30.5	30.5	30.5	30.5	30.0	30.0	30.0	30.0	30.0	30.0
51																								33.0	33.0	32.5	32.5	32.5	32.5	32.5	32.5	32.0	32.0	32.0	32.0	32.0	31.5	31.5	31.5	31.5	31.5	31.5	31.5	31.5
52																									34.5	34.0	34.0	34.0	34.0	33.5	33.5	33.5	33.5	33.5	33.5	33.0	33.0	33.0	33.0	33.0	33.0	32.5	32.5	32.5
53																									35.5	35.5	35.5	35.5	35.0	35.0	35.0	35.0	34.5	34.5	34.5	34.5	34.5	34.5	34.5	34.5	34.0	34.0	34.0	34.0
54																										36.5	36.5	36.5	36.5	36.5	36.5	36.0	36.0	36.0	36.0	35.5	35.5	35.5	35.5	35.5	35.5	35.0	35.0	35.0
55																										38.0	38.0	37.5	37.5	37.5	37.5	37.5	37.0	37.0	37.0	37.0	37.0	37.0	37.0	36.5	36.5	36.5	36.5	36.5
56																										39.0	39.0	38.5	38.5	38.5	38.5	38.5	38.5	38.5	38.5	38.5	38.0	38.0	38.0	38.0	38.0	38.0	37.5	37.5
57																												40.0	40.0	40.0	40.0	40.0	40.0	39.5	39.5	39.5	39.5	39.5	39.0	39.0	39.0	39.0	39.0	39.0
58																												41.0	41.0	41.0	41.0	41.0	41.0	41.0	41.0	41.0	40.5	40.5	40.5	40.5	40.5	40.0	40.0	40.0
59																												42.0	42.0	42.0	42.0	42.0	42.0	42.0	42.0	42.0	42.0	42.0	41.5	41.5	41.5	41.5	41.5	41.5
60																												43.5	43.5	43.0	43.0	43.0	43.0	43.0	43.0	43.0	43.0	43.0	43.0	43.0	43.0	42.5	42.5	42.5
61																												44.5	44.5	44.5	44.5	44.5	44.5	44.5	44.5	44.0	44.0	44.0	44.0	44.0	44.0	44.0	43.5	43.5
62																												45.5	45.5	45.5	45.5	45.5	45.5	45.5	45.5	45.0	45.0	45.0	45.0	45.0	45.0	45.0	45.0	45.0

Note: If irradiated stainless steel rods are present in the reconstituted fuel assembly, add an additional year of cooling time for cooling times less than 10 years.

Note: The page that follows Table 1-5f provides the explanatory notes and limitations regarding the use of this table.

Table 1-5b
PWR Fuel Qualification Table for Zone 2 Fuel with 0.8 kW per Assembly for the NUHOMS®-32PTH1 DSC (Fuel without CCs)

(Minimum required years of cooling time after reactor core discharge)

Burn Up, GWD/MTU	Maximum Assembly Average Initial U-235 Enrichment, wt. %																																															
	0.7	0.8	0.9	1.0	1.1	1.2	1.3	1.4	1.5	1.6	1.7	1.8	1.9	2.0	2.1	2.2	2.3	2.4	2.5	2.6	2.7	2.8	2.9	3.0	3.1	3.2	3.3	3.4	3.5	3.6	3.7	3.8	3.9	4.0	4.1	4.2	4.3	4.4	4.5	4.6	4.7	4.8	4.9	5.0
10	3.0	3.0	3.0	3.0	3.0	3.0	3.0	3.0	3.0	3.0	3.0	3.0	3.0	3.0	3.0	3.0	3.0	3.0	3.0	3.0	3.0	3.0	3.0	3.0	3.0	3.0	3.0	3.0	3.0	3.0	3.0	3.0	3.0	3.0	3.0	3.0	3.0	3.0	3.0	3.0	3.0	3.0	3.0	3.0
15	3.5	3.0	3.0	3.0	3.0	3.0	3.0	3.0	3.0	3.0	3.0	3.0	3.0	3.0	3.0	3.0	3.0	3.0	3.0	3.0	3.0	3.0	3.0	3.0	3.0	3.0	3.0	3.0	3.0	3.0	3.0	3.0	3.0	3.0	3.0	3.0	3.0	3.0	3.0	3.0	3.0	3.0	3.0	3.0
20	4.5	4.5	4.0	4.0	4.0	4.0	4.0	4.0	3.5	3.5	3.5	3.5	3.5	3.5	3.5	3.5	3.5	3.5	3.5	3.5	3.5	3.5	3.5	3.0	3.0	3.0	3.0	3.0	3.0	3.0	3.0	3.0	3.0	3.0	3.0	3.0	3.0	3.0	3.0	3.0	3.0	3.0	3.0	3.0
25									4.5	4.5	4.5	4.5	4.5	4.5	4.5	4.5	4.5	4.0	4.0	4.0	4.0	4.0	4.0	4.0	4.0	4.0	4.0	4.0	4.0	4.0	4.0	4.0	4.0	4.0	4.0	4.0	4.0	4.0	4.0	4.0	4.0	4.0	4.0	4.0
28									5.5	5.5	5.0	5.0	5.0	5.0	5.0	5.0	5.0	5.0	5.0	5.0	5.0	5.0	4.5	4.5	4.5	4.5	4.5	4.5	4.5	4.5	4.5	4.5	4.5	4.5	4.5	4.5	4.5	4.5	4.5	4.5	4.5	4.5	4.5	4.5
30									6.0	6.0	5.5	5.5	5.5	5.5	5.5	5.5	5.5	5.5	5.5	5.5	5.0	5.0	5.0	5.0	5.0	5.0	5.0	5.0	5.0	5.0	5.0	5.0	5.0	5.0	5.0	5.0	5.0	5.0	5.0	5.0	5.0	5.0	5.0	5.0
32									6.5	6.5	6.5	6.0	6.0	6.0	6.0	6.0	6.0	6.0	6.0	6.0	6.0	5.5	5.5	5.5	5.5	5.5	5.5	5.5	5.5	5.5	5.5	5.5	5.5	5.5	5.5	5.5	5.5	5.5	5.5	5.5	5.5	5.5	5.5	5.5
34									7.5	7.0	7.0	7.0	7.0	6.5	6.5	6.5	6.5	6.5	6.5	6.5	6.5	6.5	6.5	6.5	6.0	6.0	6.0	6.0	6.0	6.0	6.0	6.0	6.0	6.0	6.0	6.0	6.0	6.0	6.0	6.0	6.0	6.0	6.0	6.0
36									8.0	8.0	8.0	7.5	7.5	7.5	7.5	7.5	7.5	7.5	7.0	7.0	7.0	7.0	7.0	7.0	7.0	7.0	7.0	7.0	6.5	6.5	6.5	6.5	6.5	6.5	6.5	6.5	6.5	6.5	6.5	6.5	6.5	6.5	6.5	6.5
38									9.0	9.0	9.0	9.0	8.5	8.5	8.5	8.5	8.5	8.0	8.0	8.0	8.0	8.0	8.0	8.0	8.0	7.5	7.5	7.5	7.5	7.5	7.5	7.5	7.5	7.5	7.5	7.5	7.5	7.0	7.0	7.0	7.0	7.0	7.0	7.0
39									10.0	9.5	9.5	9.5	9.5	9.5	9.0	9.0	9.0	9.0	8.5	8.5	8.5	8.5	8.5	8.5	8.5	8.0	8.0	8.0	8.0	8.0	8.0	8.0	8.0	8.0	8.0	8.0	8.0	7.5	7.5	7.5	7.5	7.5	7.5	7.5
40									10.5	10.5	10.5	10.0	10.0	10.0	9.5	9.5	9.5	9.5	9.5	9.0	9.0	9.0	9.0	9.0	9.0	8.5	8.5	8.5	8.5	8.5	8.5	8.5	8.5	8.0	8.0	8.0	8.0	8.0	8.0	8.0	8.0	8.0	8.0	8.0
41									11.5	11.5	11.0	11.0	10.5	10.5	10.5	10.5	10.0	10.0	10.0	10.0	10.0	9.5	9.5	9.5	9.5	9.5	9.5	9.0	9.0	9.0	9.0	9.0	9.0	9.0	9.0	9.0	8.5	8.5	8.5	8.5	8.5	8.5	8.5	8.5
42																					10.5	10.5	10.5	10.0	10.0	10.0	10.0	10.0	10.0	10.0	10.0	9.5	9.5	9.5	9.5	9.5	9.5	9.0	9.0	9.0	9.0	9.0	9.0	9.0
43																					11.5	11.0	11.0	11.0	11.0	11.0	10.5	10.5	10.5	10.5	10.5	10.0	10.0	10.0	10.0	10.0	10.0	10.0	10.0	9.5	9.5	9.5	9.5	9.5
44																					12.0	12.0	12.0	12.0	11.5	11.5	11.5	11.5	11.5	11.0	11.0	11.0	11.0	11.0	11.0	11.0	10.5	10.5	10.5	10.5	10.5	10.5	10.5	10.5
45																					13.0	13.0	13.0	12.5	12.5	12.5	12.5	12.0	12.0	12.0	12.0	12.0	11.5	11.5	11.5	11.5	11.5	11.5	11.5	11.5	11.0	11.0	11.0	11.0
46																					14.0	14.0	14.0	13.5	13.5	13.5	13.5	13.0	13.0	13.0	13.0	13.0	12.5	12.5	12.5	12.5	12.5	12.5	12.5	12.0	12.0	12.0	12.0	12.0
47																					15.0	15.0	15.0	14.5	14.5	14.5	14.5	14.0	14.0	14.0	14.0	14.0	13.5	13.5	13.5	13.5	13.5	13.5	13.0	13.0	13.0	13.0	13.0	13.0
48																					16.5	16.0	16.0	15.5	15.5	15.5	15.5	15.5	15.0	15.0	15.0	15.0	15.0	14.5	14.5	14.5	14.5	14.5	14.5	14.0	14.0	13.5	13.5	13.5
49																								17.0	17.0	16.5	16.5	16.0	16.0	16.0	16.0	16.0	16.0	16.0	16.0	15.5	15.0	15.0	15.0	15.0	15.0	14.5	14.5	14.5
50																								18.0	18.0	18.0	17.5	17.5	17.5	17.5	17.0	17.0	17.0	17.0	17.0	16.5	16.5	16.5	16.5	16.5	16.0	15.5	15.5	15.5
51																								19.0	19.0	19.0	19.0	18.5	18.5	18.0	18.0	18.0	18.0	17.5	17.5	17.5	17.5	17.5	17.0	17.0	17.0	17.0	17.0	17.0
52																									20.0	20.0	20.0	19.5	19.5	19.5	19.5	19.5	19.0	19.0	19.0	19.0	19.0	18.5	18.5	18.5	18.5	18.5	18.5	17.5
53																									21.5	21.0	21.0	21.0	20.5	20.5	20.5	20.5	20.5	20.0	20.0	20.0	20.0	20.0	19.5	19.5	19.5	19.5	19.5	19.0
54																										22.5	22.5	22.0	22.0	21.5	21.5	21.5	21.5	21.0	21.0	21.0	21.0	21.0	20.5	20.5	20.5	20.5	20.5	20.0
55																										23.5	23.5	23.0	23.0	23.0	23.0	23.0	23.0	22.5	22.5	22.5	22.5	22.0	21.5	21.5	21.5	21.5	21.5	21.0
56																										25.0	25.0	24.5	24.5	24.5	24.0	24.0	24.0	24.0	23.5	23.0	23.0	23.0	23.0	23.0	22.5	22.5	22.5	22.5
57																												25.5	25.5	25.5	25.5	25.0	25.0	25.0	25.0	24.5	24.5	24.5	24.5	24.5	23.5	23.5	23.5	23.5
58																												27.0	27.0	26.0	26.0	26.0	26.0	26.0	25.5	25.5	25.5	25.5	25.5	25.0	25.0	25.0	25.0	25.0
59																												27.5	27.5	27.5	27.5	27.5	27.5	27.5	27.0	27.0	27.0	27.0	26.0	26.0	26.0	26.0	26.0	25.5
60																												29.0	28.5	28.5	28.5	28.5	28.0	28.0	28.0	28.0	28.0	28.0	27.5	27.5	27.5	27.5	27.5	27.0
61																												29.5	29.5	29.5	29.5	29.5	29.5	29.5	29.5	29.0	29.0	29.0	29.0	29.0	28.0	28.0	28.0	28.0
62																												31.5	30.5	30.5	30.5	30.5	30.5	30.0	30.0	30.0	30.0	30.0	29.5	29.5	29.5	29.5	29.5	29.5

Note: If irradiated stainless steel rods are present in the reconstituted fuel assembly, add an additional year of cooling time for cooling times less than 10 years.

Note: The page that follows Table 1-5f provides the explanatory notes and limitations regarding the use of this table.

Table 1-5c
PWR Fuel Qualification Table for Zone 3 or Zone 4 Fuel with 1.0 kW per Assembly for the NUHOMS®-32PTH1 DSC (Fuel without CCs)
(Minimum required years of cooling time after reactor core discharge)

Burn Up, GWD/MTU	Maximum Assembly Average Initial U-235 Enrichment, wt. %																																															
	0.7	0.8	0.9	1.0	1.1	1.2	1.3	1.4	1.5	1.6	1.7	1.8	1.9	2.0	2.1	2.2	2.3	2.4	2.5	2.6	2.7	2.8	2.9	3.0	3.1	3.2	3.3	3.4	3.5	3.6	3.7	3.8	3.9	4.0	4.1	4.2	4.3	4.4	4.5	4.6	4.7	4.8	4.9	5.0
10	3.0	3.0	3.0	3.0	3.0	3.0	3.0	3.0	3.0	3.0	3.0	3.0	3.0	3.0	3.0	3.0	3.0	3.0	3.0	3.0	3.0	3.0	3.0	3.0	3.0	3.0	3.0	3.0	3.0	3.0	3.0	3.0	3.0	3.0	3.0	3.0	3.0	3.0	3.0	3.0	3.0	3.0	3.0	3.0
15	3.0	3.0	3.0	3.0	3.0	3.0	3.0	3.0	3.0	3.0	3.0	3.0	3.0	3.0	3.0	3.0	3.0	3.0	3.0	3.0	3.0	3.0	3.0	3.0	3.0	3.0	3.0	3.0	3.0	3.0	3.0	3.0	3.0	3.0	3.0	3.0	3.0	3.0	3.0	3.0	3.0	3.0	3.0	3.0
20	3.5	3.5	3.5	3.5	3.5	3.5	3.0	3.0	3.0	3.0	3.0	3.0	3.0	3.0	3.0	3.0	3.0	3.0	3.0	3.0	3.0	3.0	3.0	3.0	3.0	3.0	3.0	3.0	3.0	3.0	3.0	3.0	3.0	3.0	3.0	3.0	3.0	3.0	3.0	3.0	3.0	3.0	3.0	3.0
25									4.0	4.0	4.0	4.0	3.5	3.5	3.5	3.5	3.5	3.5	3.5	3.5	3.5	3.5	3.5	3.5	3.5	3.5	3.5	3.5	3.5	3.5	3.5	3.5	3.5	3.5	3.5	3.0	3.0	3.0	3.0	3.0	3.0	3.0	3.0	3.0
28									4.5	4.5	4.5	4.5	4.0	4.0	4.0	4.0	4.0	4.0	4.0	4.0	4.0	4.0	4.0	4.0	4.0	4.0	4.0	4.0	4.0	3.5	3.5	3.5	3.5	3.5	3.5	3.5	3.5	3.5	3.5	3.5	3.5	3.5	3.5	3.5
30									5.0	5.0	4.5	4.5	4.5	4.5	4.5	4.5	4.5	4.5	4.5	4.0	4.0	4.0	4.0	4.0	4.0	4.0	4.0	4.0	4.0	4.0	4.0	4.0	4.0	4.0	4.0	4.0	4.0	4.0	4.0	4.0	4.0	4.0	4.0	4.0
32									5.5	5.5	5.0	5.0	5.0	5.0	5.0	4.5	4.5	4.5	4.5	4.5	4.5	4.5	4.5	4.5	4.5	4.5	4.5	4.5	4.5	4.5	4.5	4.5	4.5	4.5	4.5	4.5	4.5	4.0	4.0	4.0	4.0	4.0	4.0	4.0
34									6.0	6.0	5.5	5.5	5.5	5.5	5.0	5.0	5.0	5.0	5.0	5.0	5.0	5.0	5.0	5.0	5.0	5.0	5.0	5.0	4.5	4.5	4.5	4.5	4.5	4.5	4.5	4.5	4.5	4.5	4.5	4.5	4.5	4.5	4.5	4.5
36									6.5	6.5	6.0	6.0	6.0	6.0	5.5	5.5	5.5	5.5	5.5	5.5	5.5	5.5	5.5	5.5	5.0	5.0	5.0	5.0	5.0	5.0	5.0	5.0	5.0	5.0	5.0	5.0	5.0	5.0	5.0	5.0	5.0	5.0	5.0	5.0
38									7.5	7.0	7.0	6.5	6.5	6.5	6.0	6.0	6.0	6.0	6.0	6.0	6.0	6.0	6.0	5.5	5.5	5.5	5.5	5.5	5.5	5.5	5.5	5.5	5.5	5.5	5.5	5.5	5.5	5.5	5.5	5.5	5.5	5.5	5.0	5.0
39									7.5	7.5	7.0	7.0	7.0	6.5	6.5	6.5	6.5	6.0	6.0	6.0	6.0	6.0	6.0	6.0	6.0	6.0	6.0	6.0	6.0	6.0	5.5	5.5	5.5	5.5	5.5	5.5	5.5	5.5	5.5	5.5	5.5	5.5	5.5	5.5
40									8.0	8.0	7.5	7.5	7.0	7.0	7.0	6.5	6.5	6.5	6.5	6.5	6.5	6.5	6.5	6.0	6.0	6.0	6.0	6.0	6.0	6.0	6.0	6.0	6.0	6.0	6.0	6.0	6.0	6.0	6.0	5.5	5.5	5.5	5.5	5.5
41									8.5	8.5	8.0	7.5	7.5	7.5	7.0	7.0	7.0	7.0	7.0	6.5	6.5	6.5	6.5	6.5	6.5	6.5	6.5	6.5	6.5	6.5	6.0	6.0	6.0	6.0	6.0	6.0	6.0	6.0	6.0	6.0	6.0	6.0	6.0	6.0
42																					7.0	7.0	7.0	7.0	7.0	6.5	6.5	6.5	6.5	6.5	6.5	6.5	6.5	6.5	6.5	6.5	6.5	6.5	6.5	6.0	6.0	6.0	6.0	6.0
43																					7.5	7.5	7.5	7.0	7.0	7.0	7.0	7.0	7.0	7.0	7.0	7.0	7.0	6.5	6.5	6.5	6.5	6.5	6.5	6.5	6.5	6.5	6.5	6.5
44																					8.0	7.5	7.5	7.5	7.5	7.5	7.5	7.5	7.5	7.0	7.0	7.0	7.0	7.0	7.0	7.0	7.0	7.0	7.0	7.0	7.0	6.5	6.5	6.5
45																					8.0	8.0	8.0	8.0	8.0	8.0	8.0	7.5	7.5	7.5	7.5	7.5	7.5	7.5	7.5	7.5	7.5	7.0	7.0	7.0	7.0	7.0	7.0	7.0
46																					8.5	8.5	8.5	8.5	8.5	8.5	8.0	8.0	8.0	8.0	8.0	8.0	8.0	8.0	7.5	7.5	7.5	7.5	7.5	7.5	7.5	7.5	7.5	7.5
47																					9.0	9.0	9.0	9.0	9.0	8.5	8.5	8.5	8.5	8.5	8.5	8.5	8.0	8.0	8.0	8.0	8.0	8.0	8.0	8.0	8.0	8.0	7.5	7.5
48																					10.0	9.5	9.5	9.5	9.5	9.5	9.0	9.0	9.0	9.0	9.0	8.5	8.5	8.5	8.5	8.5	8.5	8.5	8.5	8.5	8.5	8.0	8.0	8.0
49																								10.0	10.0	10.0	9.5	9.5	9.5	9.5	9.5	9.5	9.0	9.0	9.0	9.0	9.0	9.0	9.0	9.0	8.5	8.5	8.5	8.5
50																								10.5	10.5	10.5	10.5	10.0	10.0	10.0	10.0	10.0	10.0	9.5	9.5	9.5	9.5	9.5	9.5	9.5	9.0	9.0	9.0	9.0
51																								11.5	11.5	11.0	11.0	11.0	11.0	10.5	10.5	10.5	10.5	10.5	10.0	10.0	10.0	10.0	10.0	10.0	9.5	9.5	9.5	9.5
52																									12.0	12.0	12.0	11.5	11.5	11.5	11.0	11.0	11.0	11.0	11.0	10.5	10.5	10.5	10.5	10.5	10.5	10.0	10.0	10.0
53																									13.0	12.5	12.5	12.5	12.0	12.0	12.0	12.0	11.5	11.5	11.5	11.5	11.5	11.0	11.0	11.0	11.0	11.0	11.0	10.5
54																										13.5	13.5	13.0	13.0	13.0	12.5	12.5	12.5	12.5	12.5	12.0	12.0	12.0	12.0	12.0	11.5	11.5	11.5	11.5
55																										14.5	14.0	14.0	14.0	13.5	13.5	13.5	13.5	13.0	13.0	13.0	13.0	12.5	12.5	12.5	12.5	12.5	12.0	12.0
56																										15.5	15.0	15.0	15.0	14.5	14.5	14.5	14.0	14.0	14.0	13.5	14.0	13.5	13.5	13.5	13.5	13.0	13.0	13.0
57																												16.0	15.5	15.5	15.5	15.5	15.0	15.0	15.0	14.5	14.5	14.5	14.5	14.0	14.0	14.0	14.0	13.5
58																												17.0	16.5	16.5	16.5	16.0	16.0	16.0	15.5	15.5	15.5	15.5	15.0	15.0	15.0	14.5	14.5	14.5
59																												18.0	17.5	17.5	17.5	17.0	17.0	17.0	16.5	16.5	16.5	16.0	16.0	16.0	16.0	15.5	15.5	15.5
60																												19.0	18.5	18.5	18.0	18.0	18.0	17.5	17.5	17.5	17.5	17.0	17.0	17.0	16.5	16.5	16.5	16.5
61																												20.0	19.5	19.5	19.0	19.5	19.0	18.5	18.5	18.5	18.0	18.0	18.5	18.0	17.5	17.5	17.5	17.5
62																												20.5	20.5	20.5	20.0	20.0	20.0	20.0	19.5	19.5	19.5	19.0	19.0	19.0	18.5	18.5	18.5	18.5

Note: If irradiated stainless steel rods are present in the reconstituted fuel assembly, add an additional year of cooling time for cooling times

Note: The page that follows Table 1-5f provides the explanatory notes and limitations regarding the use of this table.

Table 1-5d
PWR Fuel Qualification Table for Zone 5 Fuel with 1.3 kW per Assembly for the NUHOMS®-32PTH1 DSC (Fuel without CCs)

(Minimum required years of cooling time after reactor core discharge)

Burn Up, GWD/MTU	Maximum Assembly Average Initial U-235 Enrichment, wt. %																																															
	0.7	0.8	0.9	1.0	1.1	1.2	1.3	1.4	1.5	1.6	1.7	1.8	1.9	2.0	2.1	2.2	2.3	2.4	2.5	2.6	2.7	2.8	2.9	3.0	3.1	3.2	3.3	3.4	3.5	3.6	3.7	3.8	3.9	4.0	4.1	4.2	4.3	4.4	4.5	4.6	4.7	4.8	4.9	5.0
10	3.0	3.0	3.0	3.0	3.0	3.0	3.0	3.0	3.0	3.0	3.0	3.0	3.0	3.0	3.0	3.0	3.0	3.0	3.0	3.0	3.0	3.0	3.0	3.0	3.0	3.0	3.0	3.0	3.0	3.0	3.0	3.0	3.0	3.0	3.0	3.0	3.0	3.0	3.0	3.0	3.0	3.0	3.0	3.0
15	3.0	3.0	3.0	3.0	3.0	3.0	3.0	3.0	3.0	3.0	3.0	3.0	3.0	3.0	3.0	3.0	3.0	3.0	3.0	3.0	3.0	3.0	3.0	3.0	3.0	3.0	3.0	3.0	3.0	3.0	3.0	3.0	3.0	3.0	3.0	3.0	3.0	3.0	3.0	3.0	3.0	3.0	3.0	3.0
20	3.0	3.0	3.0	3.0	3.0	3.0	3.0	3.0	3.0	3.0	3.0	3.0	3.0	3.0	3.0	3.0	3.0	3.0	3.0	3.0	3.0	3.0	3.0	3.0	3.0	3.0	3.0	3.0	3.0	3.0	3.0	3.0	3.0	3.0	3.0	3.0	3.0	3.0	3.0	3.0	3.0	3.0	3.0	3.0
25									3.0	3.0	3.0	3.0	3.0	3.0	3.0	3.0	3.0	3.0	3.0	3.0	3.0	3.0	3.0	3.0	3.0	3.0	3.0	3.0	3.0	3.0	3.0	3.0	3.0	3.0	3.0	3.0	3.0	3.0	3.0	3.0	3.0	3.0	3.0	3.0
28									3.5	3.5	3.5	3.5	3.5	3.5	3.5	3.0	3.0	3.0	3.0	3.0	3.0	3.0	3.0	3.0	3.0	3.0	3.0	3.0	3.0	3.0	3.0	3.0	3.0	3.0	3.0	3.0	3.0	3.0	3.0	3.0	3.0	3.0	3.0	3.0
30									4.0	4.0	4.0	3.5	3.5	3.5	3.5	3.5	3.5	3.5	3.5	3.5	3.5	3.5	3.5	3.5	3.5	3.5	3.5	3.0	3.0	3.0	3.0	3.0	3.0	3.0	3.0	3.0	3.0	3.0	3.0	3.0	3.0	3.0	3.0	3.0
32									4.5	4.0	4.0	4.0	4.0	4.0	4.0	4.0	3.5	3.5	3.5	3.5	3.5	3.5	3.5	3.5	3.5	3.5	3.5	3.5	3.5	3.5	3.5	3.5	3.5	3.5	3.5	3.5	3.5	3.5	3.5	3.5	3.5	3.5	3.5	3.5
34									4.5	4.5	4.5	4.5	4.5	4.0	4.0	4.0	4.0	4.0	4.0	4.0	4.0	4.0	4.0	4.0	4.0	4.0	3.5	3.5	3.5	3.5	3.5	3.5	3.5	3.5	3.5	3.5	3.5	3.5	3.5	3.5	3.5	3.5	3.5	3.5
36									5.0	5.0	5.0	4.5	4.5	4.5	4.5	4.5	4.5	4.0	4.0	4.0	4.0	4.0	4.0	4.0	4.0	4.0	4.0	4.0	4.0	4.0	4.0	4.0	4.0	4.0	4.0	4.0	4.0	4.0	4.0	4.0	4.0	4.0	4.0	4.0
38									5.5	5.5	5.0	5.0	5.0	5.0	5.0	4.5	4.5	4.5	4.5	4.5	4.5	4.5	4.5	4.5	4.5	4.5	4.5	4.5	4.0	4.0	4.0	4.0	4.0	4.0	4.0	4.0	4.0	4.0	4.0	4.0	4.0	4.0	4.0	4.0
39									6.0	5.5	5.5	5.5	5.0	5.0	5.0	5.0	5.0	4.5	4.5	4.5	4.5	4.5	4.5	4.5	4.5	4.5	4.5	4.5	4.5	4.5	4.5	4.5	4.5	4.5	4.5	4.0	4.0	4.0	4.0	4.0	4.0	4.0	4.0	4.0
40									6.0	6.0	5.5	5.5	5.5	5.5	5.0	5.0	5.0	5.0	5.0	5.0	5.0	4.5	4.5	4.5	4.5	4.5	4.5	4.5	4.5	4.5	4.5	4.5	4.5	4.5	4.5	4.5	4.5	4.5	4.5	4.5	4.5	4.5	4.5	4.5
41									6.5	6.0	6.0	6.0	5.5	5.5	5.5	5.5	5.0	5.0	5.0	5.0	5.0	5.0	5.0	5.0	5.0	5.0	4.5	4.5	4.5	4.5	4.5	4.5	4.5	4.5	4.5	4.5	4.5	4.5	4.5	4.5	4.5	4.5	4.5	4.5
42																					5.0	5.0	5.0	5.0	5.0	5.0	5.0	5.0	5.0	5.0	5.0	5.0	5.0	4.5	4.5	4.5	4.5	4.5	4.5	4.5	4.5	4.5	4.5	4.5
43																					5.5	5.5	5.0	5.0	5.0	5.0	5.0	5.0	5.0	5.0	5.0	5.0	5.0	5.0	5.0	5.0	5.0	5.0	5.0	4.5	4.5	4.5	4.5	4.5
44																					5.5	5.5	5.5	5.5	5.5	5.5	5.5	5.5	5.0	5.0	5.0	5.0	5.0	5.0	5.0	5.0	5.0	5.0	5.0	5.0	5.0	5.0	5.0	5.0
45																					5.5	5.5	5.5	5.5	5.5	5.5	5.5	5.5	5.5	5.5	5.5	5.5	5.0	5.0	5.0	5.0	5.0	5.0	5.0	5.0	5.0	5.0	5.0	5.0
46																					6.0	6.0	6.0	6.0	6.0	5.5	5.5	5.5	5.5	5.5	5.5	5.5	5.5	5.5	5.5	5.5	5.5	5.5	5.0	5.0	5.0	5.0	5.0	5.0
47																					6.0	6.0	6.0	6.0	6.0	6.0	6.0	6.0	6.0	5.5	5.5	5.5	5.5	5.5	5.5	5.5	5.5	5.5	5.5	5.5	5.5	5.5	5.5	5.5
48																					6.5	6.5	6.5	6.5	6.0	6.0	6.0	6.0	6.0	6.0	6.0	6.0	6.0	5.5	5.5	5.5	5.5	5.5	5.5	5.5	5.5	5.5	5.5	5.5
49																								6.5	6.5	6.5	6.5	6.5	6.5	6.0	6.0	6.0	6.0	6.0	6.0	6.0	6.0	6.0	6.0	6.0	6.0	6.0	6.0	5.5
50																								7.0	6.5	6.5	6.5	6.5	6.5	6.5	6.5	6.5	6.5	6.5	6.0	6.0	6.0	6.0	6.0	6.0	6.0	6.0	6.0	6.0
51																								7.0	7.0	7.0	7.0	7.0	7.0	6.5	6.5	6.5	6.5	6.5	6.5	6.5	6.5	6.5	6.5	6.0	6.0	6.0	6.0	6.0
52																									7.5	7.5	7.0	7.0	7.0	7.0	7.0	7.0	7.0	7.0	6.5	6.5	6.5	6.5	6.5	6.5	6.5	6.5	6.5	6.5
53																									7.5	7.5	7.5	7.5	7.5	7.5	7.0	7.0	7.0	7.0	7.0	7.0	7.0	7.0	7.0	7.0	6.5	6.5	6.5	6.5
54																										8.0	8.0	8.0	7.5	7.5	7.5	7.5	7.5	7.5	7.5	7.0	7.0	7.0	7.0	7.0	7.0	7.0	7.0	7.0
55																										8.5	8.0	8.0	8.0	8.0	8.0	8.0	8.0	7.5	7.5	7.5	7.5	7.5	7.5	7.5	7.5	7.0	7.0	7.0
56																										8.5	8.5	8.5	8.5	8.5	8.5	8.0	8.0	8.0	8.0	8.0	8.0	8.0	7.5	7.5	7.5	7.5	7.5	7.5
57																												9.0	9.0	8.5	8.5	8.5	8.5	8.5	8.5	8.5	8.0	8.0	8.0	8.0	8.0	8.0	8.0	8.0
58																												9.5	9.5	9.0	9.0	9.0	9.0	9.0	9.0	8.5	8.5	8.5	8.5	8.5	8.5	8.0	8.0	8.0
59																												10.0	10.0	9.5	9.5	9.5	9.5	9.5	9.0	9.0	9.0	9.0	9.0	9.0	8.5	8.5	8.5	8.5
60																												10.5	10.5	10.0	10.0	10.0	10.0	10.0	9.5	9.5	9.5	9.5	9.5	9.0	9.0	9.0	9.0	9.0
61																												11.0	11.0	11.0	10.5	10.5	10.5	10.5	10.0	10.0	10.0	10.0	10.0	10.0	9.5	9.5	9.5	9.5
62																												11.5	11.5	11.5	11.5	11.0	11.0	11.0	10.5	10.5	10.5	10.5	10.5	10.0	10.0	10.0	10.0	10.0

Note: If irradiated stainless steel rods are present in the reconstituted fuel assembly, add an additional year of cooling time for cooling times less than 10 years.

Note: The page that follows Table 1-5f provides the explanatory notes and limitations regarding the use of this table.

Table 1-5e

PWR Fuel Qualification Table for Zone 5 with Damaged Fuel with 1.2 kW per Assembly for the NUHOMS®-32PTH1 DSC (Fuel without CCs)

(Minimum required years of cooling time after reactor core discharge)

Burn Up, GWD/MTU	Maximum Assembly Average Initial U-235 Enrichment, wt. %																																													
	0.7	0.8	0.9	1	1.1	1.2	1.3	1.4	1.5	1.6	1.7	1.8	1.9	2	2.1	2.2	2.3	2.4	2.5	2.6	2.7	2.8	2.9	3	3.1	3.2	3.3	3.4	3.5	3.6	3.7	3.8	3.9	4	4.1	4.2	4.3	4.4	4.5	4.6	4.7	4.8	4.9	5
10	3.0	3.0	3.0	3.0	3.0	3.0	3.0	3.0	3.0	3.0	3.0	3.0	3.0	3.0	3.0	3.0	3.0	3.0	3.0	3.0	3.0	3.0	3.0	3.0	3.0	3.0	3.0	3.0	3.0	3.0	3.0	3.0	3.0	3.0	3.0	3.0	3.0	3.0	3.0	3.0	3.0	3.0	3.0	3.0
15	3.0	3.0	3.0	3.0	3.0	3.0	3.0	3.0	3.0	3.0	3.0	3.0	3.0	3.0	3.0	3.0	3.0	3.0	3.0	3.0	3.0	3.0	3.0	3.0	3.0	3.0	3.0	3.0	3.0	3.0	3.0	3.0	3.0	3.0	3.0	3.0	3.0	3.0	3.0	3.0	3.0	3.0	3.0	3.0
20	3.5	3.5	3.5	3.5	3.5	3.5	3.0	3.0	3.0	3.0	3.0	3.0	3.0	3.0	3.0	3.0	3.0	3.0	3.0	3.0	3.0	3.0	3.0	3.0	3.0	3.0	3.0	3.0	3.0	3.0	3.0	3.0	3.0	3.0	3.0	3.0	3.0	3.0	3.0	3.0	3.0	3.0	3.0	3.0
25									3.5	3.5	3.5	3.5	3.5	3.5	3.5	3.5	3.5	3.5	3.5	3.5	3.5	3.5	3.5	3.5	3.5	3.5	3.5	3.5	3.5	3.5	3.5	3.5	3.5	3.5	3.5	3.0	3.0	3.0	3.0	3.0	3.0	3.0	3.0	3.0
28									4.0	4.0	4.0	4.0	4.0	4.0	4.0	3.5	3.5	3.5	3.5	3.5	3.5	3.5	3.5	3.5	3.5	3.5	3.5	3.5	3.5	3.5	3.5	3.5	3.5	3.5	3.5	3.5	3.5	3.5	3.5	3.5	3.5	3.5	3.5	3.5
30									4.5	4.5	4.5	4.0	4.0	4.0	4.0	4.0	4.0	4.0	4.0	4.0	4.0	4.0	4.0	4.0	4.0	4.0	4.0	3.5	3.5	3.5	3.5	3.5	3.5	3.5	3.5	3.5	3.5	3.5	3.5	3.5	3.5	3.5	3.5	3.5
32									5.0	5.0	4.5	4.5	4.5	4.5	4.5	4.5	4.0	4.0	4.0	4.0	4.0	4.0	4.0	4.0	4.0	4.0	4.0	4.0	4.0	4.0	4.0	4.0	4.0	4.0	4.0	4.0	4.0	4.0	4.0	4.0	4.0	4.0	4.0	4.0
34									5.5	5.5	5.0	5.0	5.0	5.0	4.5	4.5	4.5	4.5	4.5	4.5	4.5	4.5	4.5	4.5	4.5	4.5	4.5	4.5	4.0	4.0	4.0	4.0	4.0	4.0	4.0	4.0	4.0	4.0	4.0	4.0	4.0	4.0	4.0	4.0
36									6.0	6.0	5.5	5.5	5.5	5.5	5.0	5.0	5.0	5.0	5.0	5.0	5.0	5.0	5.0	5.0	4.5	4.5	4.5	4.5	4.5	4.5	4.5	4.5	4.5	4.5	4.5	4.5	4.5	4.5	4.5	4.5	4.5	4.5	4.5	4.5
38									6.5	6.5	6.0	6.0	6.0	6.0	5.5	5.5	5.5	5.5	5.5	5.5	5.5	5.5	5.5	5.0	5.0	5.0	5.0	5.0	5.0	5.0	5.0	5.0	5.0	5.0	5.0	5.0	5.0	5.0	5.0	5.0	5.0	5.0	4.5	4.5
39									7.0	6.5	6.5	6.5	6.0	6.0	6.0	6.0	6.0	5.5	5.5	5.5	5.5	5.5	5.5	5.5	5.5	5.5	5.5	5.5	5.5	5.0	5.0	5.0	5.0	5.0	5.0	5.0	5.0	5.0	5.0	5.0	5.0	5.0	5.0	5.0
40									7.0	7.0	6.5	6.5	6.5	6.5	6.0	6.0	6.0	6.0	6.0	6.0	6.0	5.5	5.5	5.5	5.5	5.5	5.5	5.5	5.5	5.5	5.5	5.5	5.5	5.5	5.5	5.5	5.5	5.5	5.5	5.0	5.0	5.0	5.0	5.0
41									7.5	7.0	7.0	7.0	6.5	6.5	6.5	6.5	6.0	6.0	6.0	6.0	6.0	6.0	6.0	6.0	6.0	6.0	5.5	5.5	5.5	5.5	5.5	5.5	5.5	5.5	5.5	5.5	5.5	5.5	5.5	5.5	5.5	5.5	5.5	5.5
42																					6.0	6.0	6.0	6.0	6.0	6.0	6.0	6.0	6.0	6.0	6.0	6.0	6.0	5.5	5.5	5.5	5.5	5.5	5.5	5.5	5.5	5.5	5.5	5.5
43																					6.5	6.5	6.0	6.0	6.0	6.0	6.0	6.0	6.0	6.0	6.0	6.0	6.0	6.0	6.0	6.0	6.0	6.0	6.0	6.0	5.5	5.5	5.5	5.5
44																					6.5	6.5	6.5	6.5	6.5	6.5	6.5	6.5	6.0	6.0	6.0	6.0	6.0	6.0	6.0	6.0	6.0	6.0	6.0	6.0	6.0	6.0	6.0	6.0
45																					6.5	6.5	6.5	6.5	6.5	6.5	6.5	6.5	6.5	6.5	6.5	6.5	6.5	6.0	6.0	6.0	6.0	6.0	6.0	6.0	6.0	6.0	6.0	6.0
46																					7.0	7.0	7.0	7.0	7.0	7.0	6.5	6.5	6.5	6.5	6.5	6.5	6.5	6.5	6.5	6.5	6.5	6.5	6.5	6.0	6.0	6.0	6.0	6.0
47																					7.5	7.5	7.5	7.5	7.5	7.0	7.0	7.0	7.0	7.0	7.0	7.0	6.5	6.5	6.5	6.5	6.5	6.5	6.5	6.5	6.5	6.5	6.5	6.5
48																					8.0	8.0	8.0	8.0	7.5	7.5	7.5	7.5	7.5	7.5	7.5	7.5	7.0	7.0	7.0	7.0	7.0	7.0	7.0	7.0	7.0	6.5	6.5	6.5
49																								8.0	8.0	8.0	8.0	8.0	8.0	7.5	7.5	7.5	7.5	7.5	7.5	7.5	7.5	7.5	7.5	7.5	7.0	7.0	7.0	7.0
50																								8.5	8.0	8.0	8.0	8.0	8.0	8.0	8.0	8.0	8.0	8.0	7.5	7.5	7.5	7.5	7.5	7.5	7.5	7.5	7.5	7.5
51																								9.0	9.0	8.5	8.5	8.5	8.5	8.0	8.0	8.0	8.0	8.0	8.0	8.0	8.0	8.0	8.0	8.0	7.5	7.5	7.5	7.5
52																									9.5	9.5	9.0	9.0	9.0	9.0	8.5	8.5	8.5	8.5	8.5	8.0	8.0	8.0	8.0	8.0	8.0	8.0	8.0	8.0
53																									9.5	9.5	9.5	9.5	9.5	9.5	9.0	9.0	9.0	9.0	9.0	9.0	9.0	8.5	8.5	8.5	8.5	8.5	8.5	8.0
54																										10.0	10.0	10.0	9.5	9.5	9.5	9.5	9.5	9.5	9.5	9.0	9.0	9.0	9.0	9.0	9.0	9.0	9.0	9.0
55																										11.0	10.5	10.5	10.5	10.0	10.0	10.0	10.0	9.5	9.5	9.5	9.5	9.5	9.5	9.5	9.5	9.0	9.0	9.0
56																										11.0	11.0	11.0	11.0	11.0	11.0	10.5	10.5	10.5	10.5	10.0	10.5	10.0	10.0	10.0	10.0	9.5	9.5	9.5
57																												11.5	11.5	11.0	11.0	11.0	11.0	11.0	11.0	11.0	10.5	10.5	10.5	10.5	10.5	10.5	10.5	10.0
58																												12.5	12.0	12.0	12.0	11.5	11.5	11.5	11.5	11.0	11.0	11.0	11.0	11.0	11.0	10.5	10.5	10.5
59																												13.0	13.0	12.5	12.5	12.5	12.5	12.5	12.0	12.0	12.0	11.5	11.5	11.5	11.5	11.0	11.0	11.0
60																												13.5	13.5	13.0	13.0	13.0	13.0	13.0	12.5	12.5	12.5	12.5	12.5	12.0	12.0	12.0	12.0	12.0
61																												14.5	14.0	14.0	13.5	14.0	13.5	13.5	13.0	13.0	13.0	13.0	13.0	13.0	12.5	12.5	12.5	12.5
62																												15.0	15.0	15.0	14.5	14.5	14.5	14.5	14.0	14.0	14.0	13.5	13.5	13.5	13.0	13.0	13.0	13.0

Note: If irradiated stainless steel rods are present in the reconstituted fuel assembly, add an additional year of cooling time for cooling times less than 10 years.

Note: The page that follows Table 1-5f provides the explanatory notes and limitations regarding the use of this table.

Table 1-5f
PWR Fuel Qualification Table for Zone 6 Fuel with 1.5 kW per Assembly for the NUHOMS®-32PTH1 DSC (Fuel without CCs)
(Minimum required years of cooling time after reactor core discharge)

Burn Up, GWD/MTU	Maximum Assembly Average Initial U-235 Enrichment, wt. %																																															
	0.7	0.8	0.9	1.0	1.1	1.2	1.3	1.4	1.5	1.6	1.7	1.8	1.9	2.0	2.1	2.2	2.3	2.4	2.5	2.6	2.7	2.8	2.9	3.0	3.1	3.2	3.3	3.4	3.5	3.6	3.7	3.8	3.9	4.0	4.1	4.2	4.3	4.4	4.5	4.6	4.7	4.8	4.9	5.0
10	3.0	3.0	3.0	3.0	3.0	3.0	3.0	3.0	3.0	3.0	3.0	3.0	3.0	3.0	3.0	3.0	3.0	3.0	3.0	3.0	3.0	3.0	3.0	3.0	3.0	3.0	3.0	3.0	3.0	3.0	3.0	3.0	3.0	3.0	3.0	3.0	3.0	3.0	3.0	3.0	3.0	3.0	3.0	3.0
15	3.0	3.0	3.0	3.0	3.0	3.0	3.0	3.0	3.0	3.0	3.0	3.0	3.0	3.0	3.0	3.0	3.0	3.0	3.0	3.0	3.0	3.0	3.0	3.0	3.0	3.0	3.0	3.0	3.0	3.0	3.0	3.0	3.0	3.0	3.0	3.0	3.0	3.0	3.0	3.0	3.0	3.0	3.0	3.0
20	3.0	3.0	3.0	3.0	3.0	3.0	3.0	3.0	3.0	3.0	3.0	3.0	3.0	3.0	3.0	3.0	3.0	3.0	3.0	3.0	3.0	3.0	3.0	3.0	3.0	3.0	3.0	3.0	3.0	3.0	3.0	3.0	3.0	3.0	3.0	3.0	3.0	3.0	3.0	3.0	3.0	3.0	3.0	3.0
25									3.0	3.0	3.0	3.0	3.0	3.0	3.0	3.0	3.0	3.0	3.0	3.0	3.0	3.0	3.0	3.0	3.0	3.0	3.0	3.0	3.0	3.0	3.0	3.0	3.0	3.0	3.0	3.0	3.0	3.0	3.0	3.0	3.0	3.0	3.0	3.0
28									3.5	3.0	3.0	3.0	3.0	3.0	3.0	3.0	3.0	3.0	3.0	3.0	3.0	3.0	3.0	3.0	3.0	3.0	3.0	3.0	3.0	3.0	3.0	3.0	3.0	3.0	3.0	3.0	3.0	3.0	3.0	3.0	3.0	3.0	3.0	3.0
30									3.5	3.5	3.5	3.5	3.5	3.5	3.0	3.0	3.0	3.0	3.0	3.0	3.0	3.0	3.0	3.0	3.0	3.0	3.0	3.0	3.0	3.0	3.0	3.0	3.0	3.0	3.0	3.0	3.0	3.0	3.0	3.0	3.0	3.0	3.0	3.0
32									4.0	3.5	3.5	3.5	3.5	3.5	3.5	3.5	3.5	3.5	3.5	3.0	3.0	3.0	3.0	3.0	3.0	3.0	3.0	3.0	3.0	3.0	3.0	3.0	3.0	3.0	3.0	3.0	3.0	3.0	3.0	3.0	3.0	3.0	3.0	3.0
34									4.0	4.0	4.0	4.0	4.0	4.0	3.5	3.5	3.5	3.5	3.5	3.5	3.5	3.5	3.5	3.5	3.5	3.5	3.5	3.5	3.5	3.5	3.5	3.5	3.0	3.0	3.0	3.0	3.0	3.0	3.0	3.0	3.0	3.0	3.0	3.0
36									4.5	4.5	4.5	4.0	4.0	4.0	4.0	4.0	4.0	4.0	4.0	3.5	3.5	3.5	3.5	3.5	3.5	3.5	3.5	3.5	3.5	3.5	3.5	3.5	3.5	3.5	3.5	3.5	3.5	3.5	3.5	3.5	3.5	3.5	3.5	3.5
38									5.0	5.0	4.5	4.5	4.5	4.5	4.5	4.0	4.0	4.0	4.0	4.0	4.0	4.0	4.0	4.0	4.0	4.0	4.0	4.0	3.5	3.5	3.5	3.5	3.5	3.5	3.5	3.5	3.5	3.5	3.5	3.5	3.5	3.5	3.5	3.5
39									5.0	5.0	5.0	5.0	4.5	4.5	4.5	4.5	4.5	4.0	4.0	4.0	4.0	4.0	4.0	4.0	4.0	4.0	4.0	4.0	4.0	4.0	4.0	4.0	4.0	4.0	3.5	3.5	3.5	3.5	3.5	3.5	3.5	3.5	3.5	3.5
40									5.5	5.0	5.0	5.0	5.0	4.5	4.5	4.5	4.5	4.5	4.5	4.5	4.0	4.0	4.0	4.0	4.0	4.0	4.0	4.0	4.0	4.0	4.0	4.0	4.0	4.0	4.0	4.0	4.0	4.0	4.0	4.0	4.0	4.0	4.0	3.5
41									5.5	5.5	5.5	5.0	5.0	5.0	5.0	4.5	4.5	4.5	4.5	4.5	4.5	4.5	4.0	4.0	4.0	4.0	4.0	4.0	4.0	4.0	4.0	4.0	4.0	4.0	4.0	4.0	4.0	4.0	4.0	4.0	4.0	4.0	4.0	4.0
42																					4.5	4.5	4.5	4.5	4.5	4.5	4.5	4.5	4.0	4.0	4.0	4.0	4.0	4.0	4.0	4.0	4.0	4.0	4.0	4.0	4.0	4.0	4.0	4.0
43																					4.5	4.5	4.5	4.5	4.5	4.5	4.5	4.5	4.5	4.5	4.5	4.5	4.5	4.0	4.0	4.0	4.0	4.0	4.0	4.0	4.0	4.0	4.0	4.0
44																					5.0	4.5	4.5	4.5	4.5	4.5	4.5	4.5	4.5	4.5	4.5	4.5	4.5	4.5	4.5	4.5	4.5	4.5	4.5	4.0	4.0	4.0	4.0	4.0
45																					5.0	5.0	5.0	5.0	5.0	4.5	4.5	4.5	4.5	4.5	4.5	4.5	4.5	4.5	4.5	4.5	4.5	4.5	4.5	4.5	4.5	4.5	4.5	4.5
46																					5.0	5.0	5.0	5.0	5.0	5.0	5.0	5.0	5.0	5.0	4.5	4.5	4.5	4.5	4.5	4.5	4.5	4.5	4.5	4.5	4.5	4.5	4.5	4.5
47																					5.5	5.5	5.0	5.0	5.0	5.0	5.0	5.0	5.0	5.0	5.0	5.0	4.5	4.5	4.5	4.5	4.5	4.5	4.5	4.5	4.5	4.5	4.5	4.5
48																					5.5	5.5	5.5	5.5	5.5	5.0	5.0	5.0	5.0	5.0	5.0	5.0	5.0	5.0	5.0	5.0	5.0	5.0	5.0	5.0	5.0	5.0	4.5	4.5
49																								5.5	5.5	5.5	5.5	5.5	5.5	5.0	5.0	5.0	5.0	5.0	5.0	5.0	5.0	5.0	5.0	5.0	5.0	5.0	5.0	5.0
50																								5.5	5.5	5.5	5.5	5.5	5.5	5.5	5.5	5.5	5.5	5.5	5.0	5.0	5.0	5.0	5.0	5.0	5.0	5.0	5.0	5.0
51																								6.0	6.0	6.0	6.0	5.5	5.5	5.5	5.5	5.5	5.5	5.5	5.5	5.5	5.5	5.5	5.5	5.5	5.0	5.0	5.0	5.0
52																									6.0	6.0	6.0	6.0	6.0	6.0	5.5	5.5	5.5	5.5	5.5	5.5	5.5	5.5	5.5	5.5	5.5	5.5	5.5	5.5
53																									6.0	6.0	6.0	6.0	6.0	6.0	6.0	6.0	6.0	6.0	6.0	6.0	5.5	5.5	5.5	5.5	5.5	5.5	5.5	5.5
54																										6.5	6.5	6.5	6.5	6.0	6.0	6.0	6.0	6.0	6.0	6.0	6.0	6.0	6.0	6.0	6.0	5.5	5.5	5.5
55																										6.5	6.5	6.5	6.5	6.5	6.5	6.5	6.5	6.5	6.0	6.0	6.0	6.0	6.0	6.0	6.0	6.0	6.0	6.0
56																										7.0	7.0	7.0	6.5	6.5	6.5	6.5	6.5	6.5	6.5	6.5	6.5	6.5	6.5	6.0	6.0	6.0	6.0	6.0
57																												7.0	7.0	7.0	7.0	7.0	7.0	6.5	6.5	6.5	6.5	6.5	6.5	6.5	6.5	6.5	6.5	6.5
58																												7.5	7.5	7.5	7.0	7.0	7.0	7.0	7.0	7.0	7.0	7.0	6.5	6.5	6.5	6.5	6.5	6.5
59																												7.5	7.5	7.5	7.5	7.5	7.5	7.5	7.5	7.0	7.0	7.0	7.0	7.0	7.0	7.0	6.5	7.0
60																												8.0	8.0	8.0	7.5	7.5	7.5	7.5	7.5	7.5	7.5	7.5	7.5	7.0	7.0	7.0	7.0	7.0
61																												8.5	8.0	8.0	8.0	8.0	8.0	8.0	8.0	7.5	7.5	7.5	7.5	7.5	7.5	7.5	7.5	7.5
62																												8.5	8.5	8.5	8.5	8.5	8.5	8.0	8.0	8.0	8.0	8.0	8.0	8.0	7.5	7.5	7.5	7.5

Note: If irradiated stainless steel rods are present in the reconstituted fuel assembly, add an additional year of cooling time.

Note: The page that follows Table 1-5f provides the explanatory notes and limitations regarding the use of this table.

Notes: Tables 1-5a through 1-5f

- Burnup = Assembly Average burnup.
- Use burnup and enrichment to lookup minimum cooling time in years. Licensee is responsible for ensuring that uncertainties in fuel enrichment and burnup are correctly accounted for during fuel qualification.
- Round burnup UP to next higher entry, round enrichments DOWN to next lower entry.
- For a fuel assembly with Control Components, for a given enrichment and burnup, increase the cooling time obtained from an FQT by one year.
- Fuel with an assembly average initial enrichment less than 0.7 (or less than the minimum provided above for each burnup) and greater than 5.0 wt.% U-235 is unacceptable for storage.
- Fuel with a burnup greater than 62 GWd/MTU is unacceptable for storage.
- Fuel with a burnup less than 10 GWd/MTU is acceptable for storage after 3-years cooling.
- See Figure 1-26 through Figure 1-28 for a description of the Heat Load Zones.
- For reconstituted fuel assemblies with UO_2 rods and/or Zr rods or Zr pellets and/or stainless steel rods, use the assembly average equivalent enrichment to determine the minimum cooling time.
- The cooling times for damaged and intact assemblies are identical.
- *Example*: An intact fuel assembly without CCs, with a decay heat load of 1.5 kW or less, an initial enrichment of 3.65 wt. % U-235 and a burnup of 41.5 GWd/MTU is acceptable for storage after a 4.0 year cooling time as defined by 3.6 wt. % U-235 (rounding down) and 42 GWd/MTU (rounding up) in Table 1-5f. If the fuel assembly has CCs, the minimum cooling time is increased by an additional one year, resulting in five year minimum cooling time prior to storage.

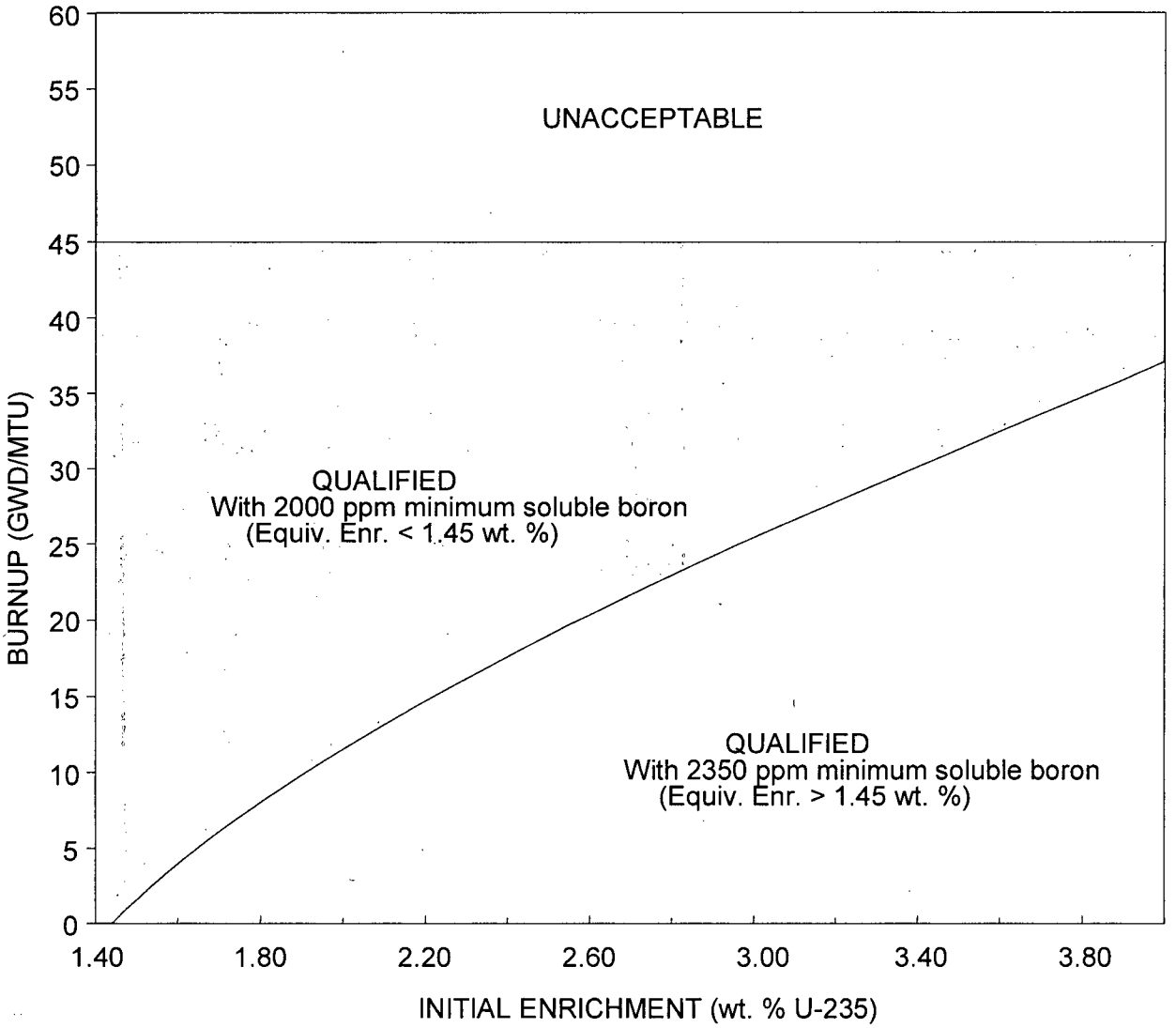

Figure 1-1
PWR Fuel Criticality Acceptance Curve

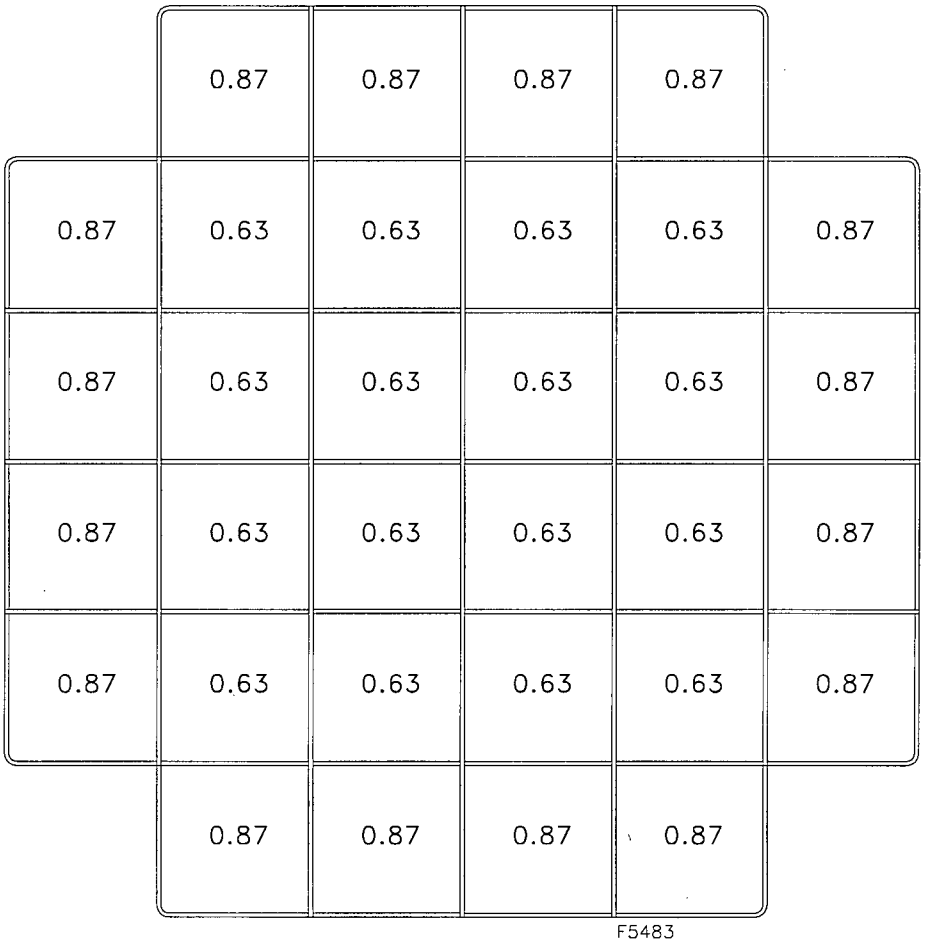

Figure 1-2
Heat Load Zoning Configuration 1 for the NUHOMS®-32PT DSC

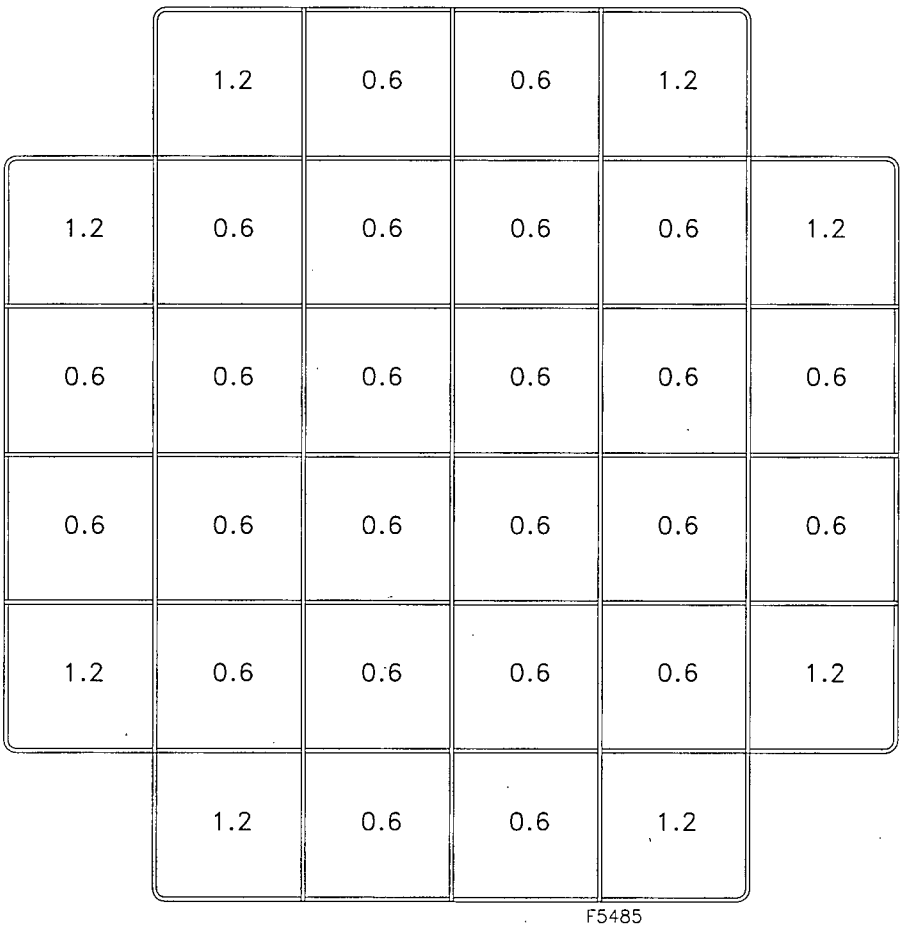

Figure 1-3
Heat Load Zoning Configuration 2 for the NUHOMS®-32PT DSC

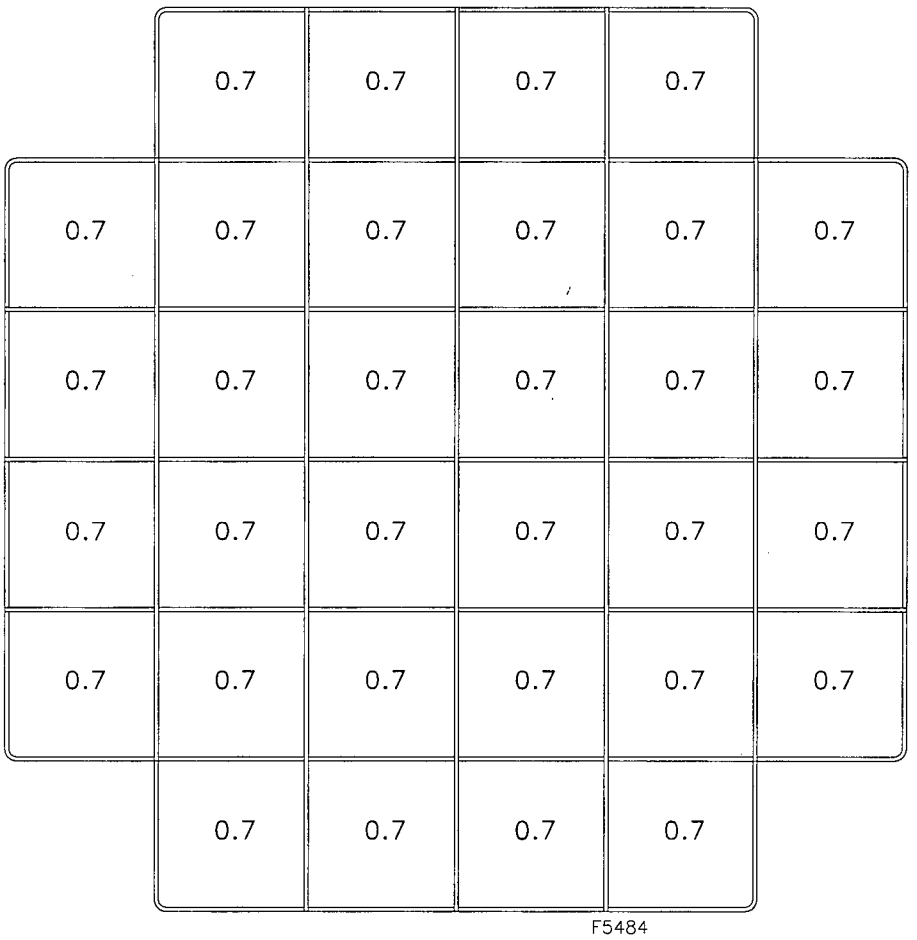

Figure 1-4
Heat Load Zoning Configuration 3 for the NUHOMS®-32PT DSC

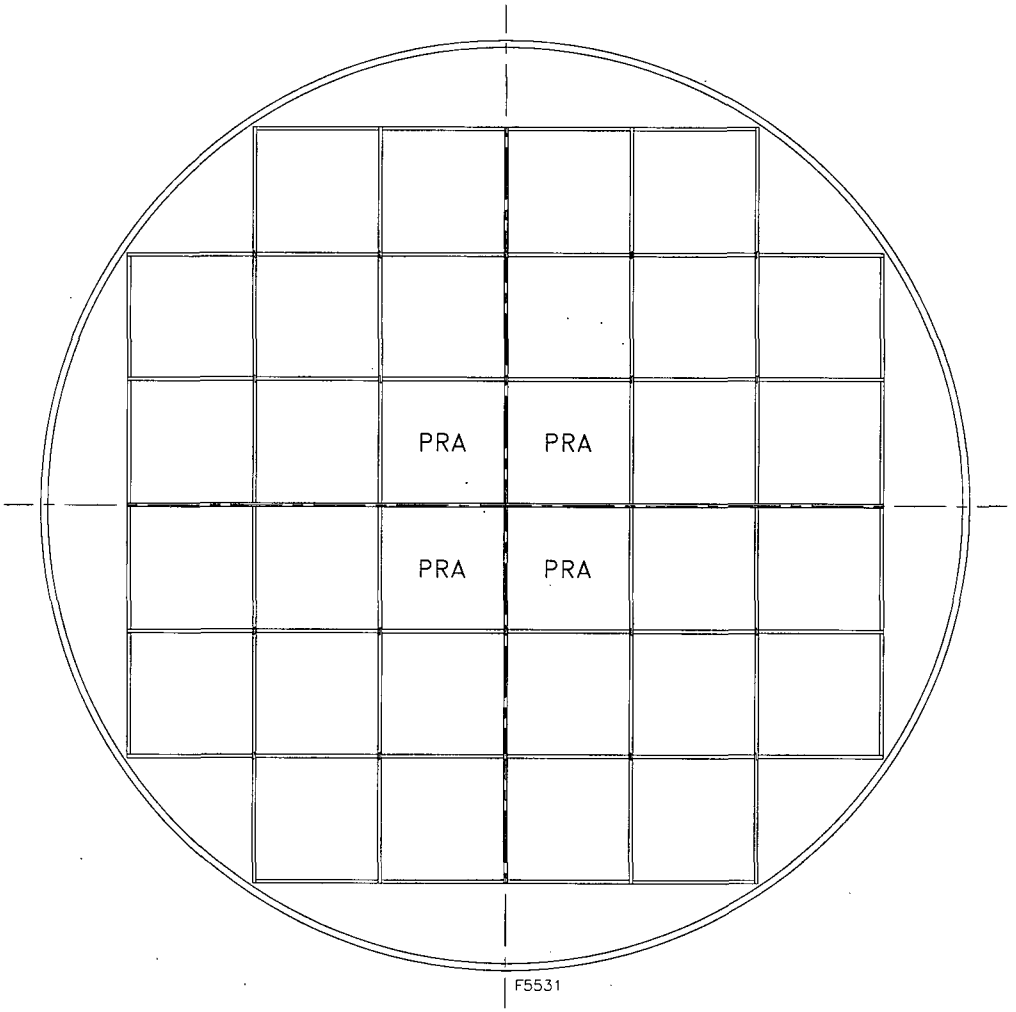

Figure 1-5
Required PRA Locations for the NUHOMS®-32PT DSC Configuration with Four PRAs

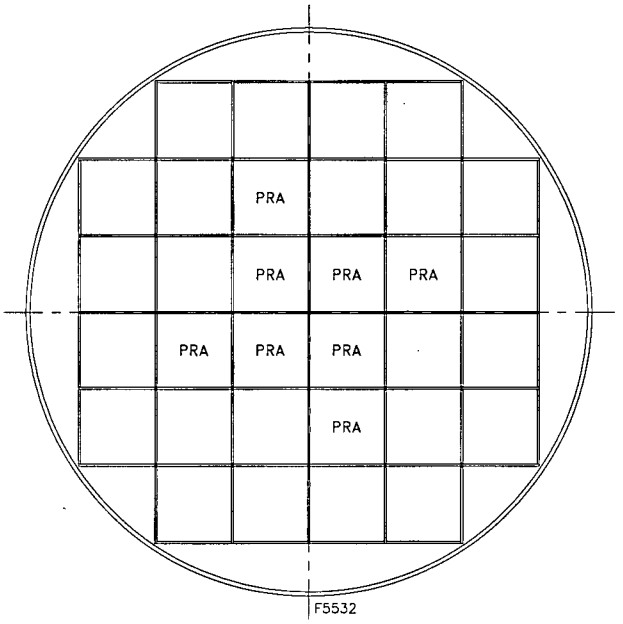

Or

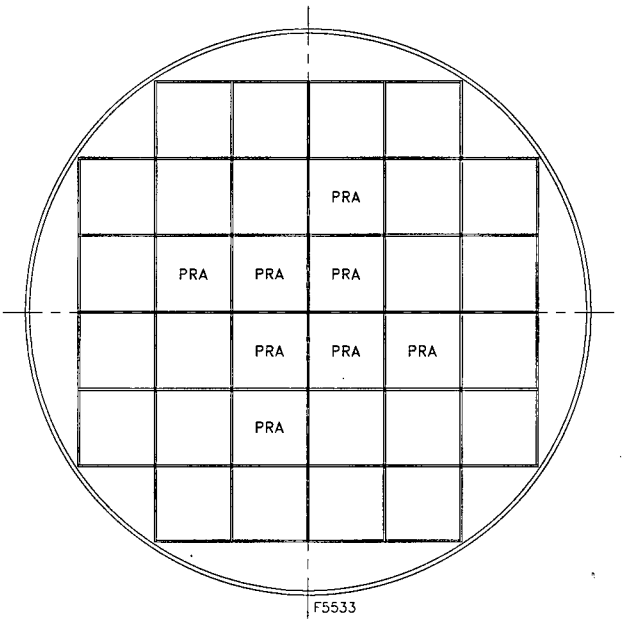

Figure 1-6
Required PRA Locations for the NUHOMS®-32PT DSC Configuration with Eight PRAs

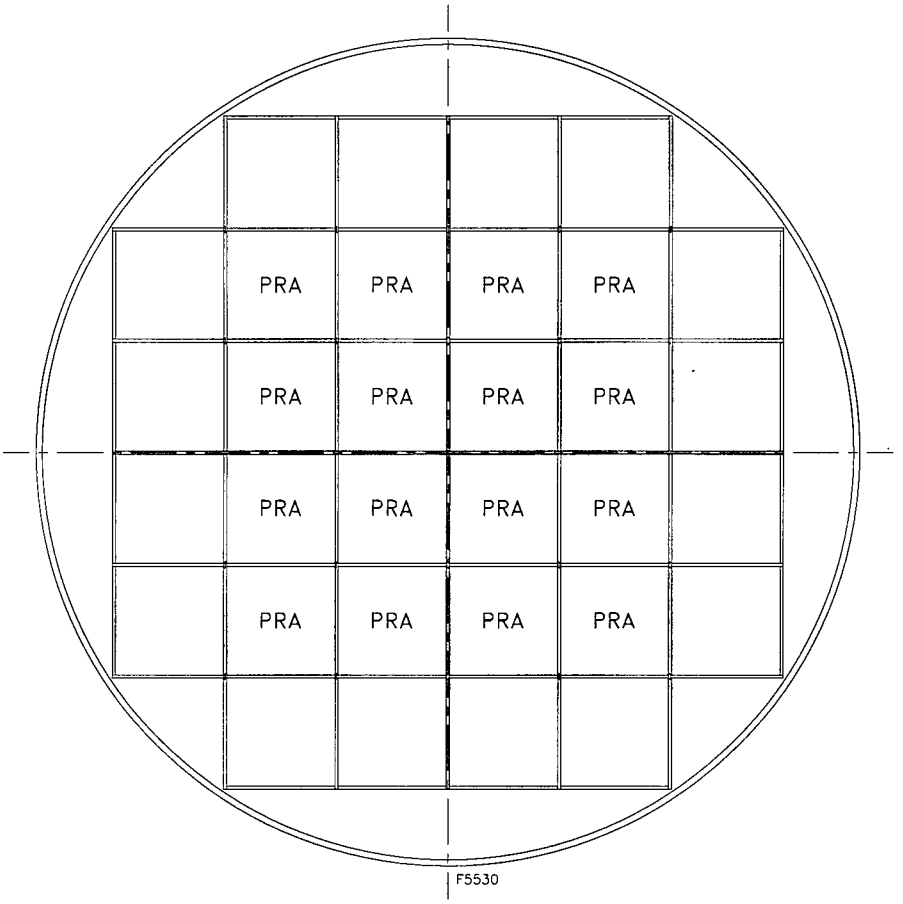

Figure 1-7
Required PRA Locations for the NUHOMS®-32PT DSC Configuration with Sixteen PRAs

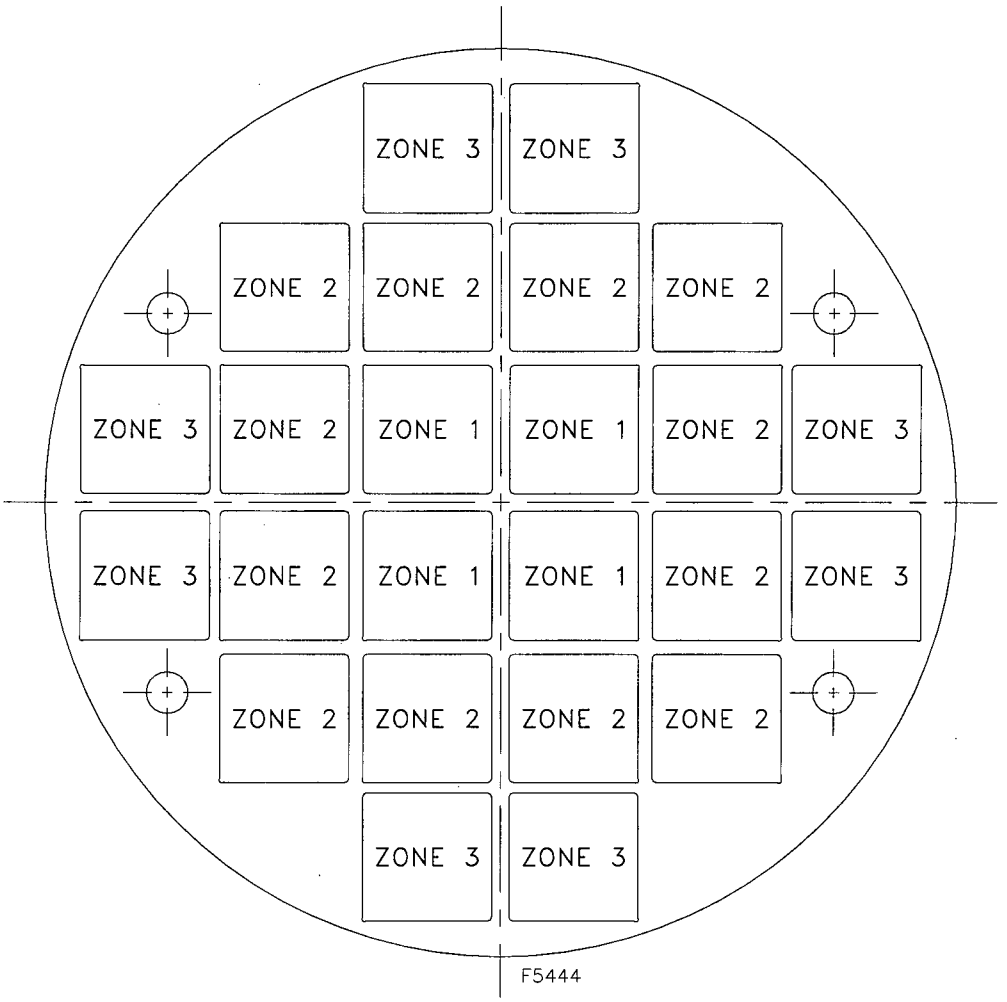

	Zone 1	Zone 2	Zone 3
Maximum Decay Heat (kW/FA)	0.7	1	1.3
Maximum Decay Heat per Zone (kW)	2.8	10.8	10.4

Figure 1-8
Heat Load Zoning Configuration for Fuel Assemblies (with or without BPRAs) Stored in NUHOMS®-24PHB DSC – Configuration 1

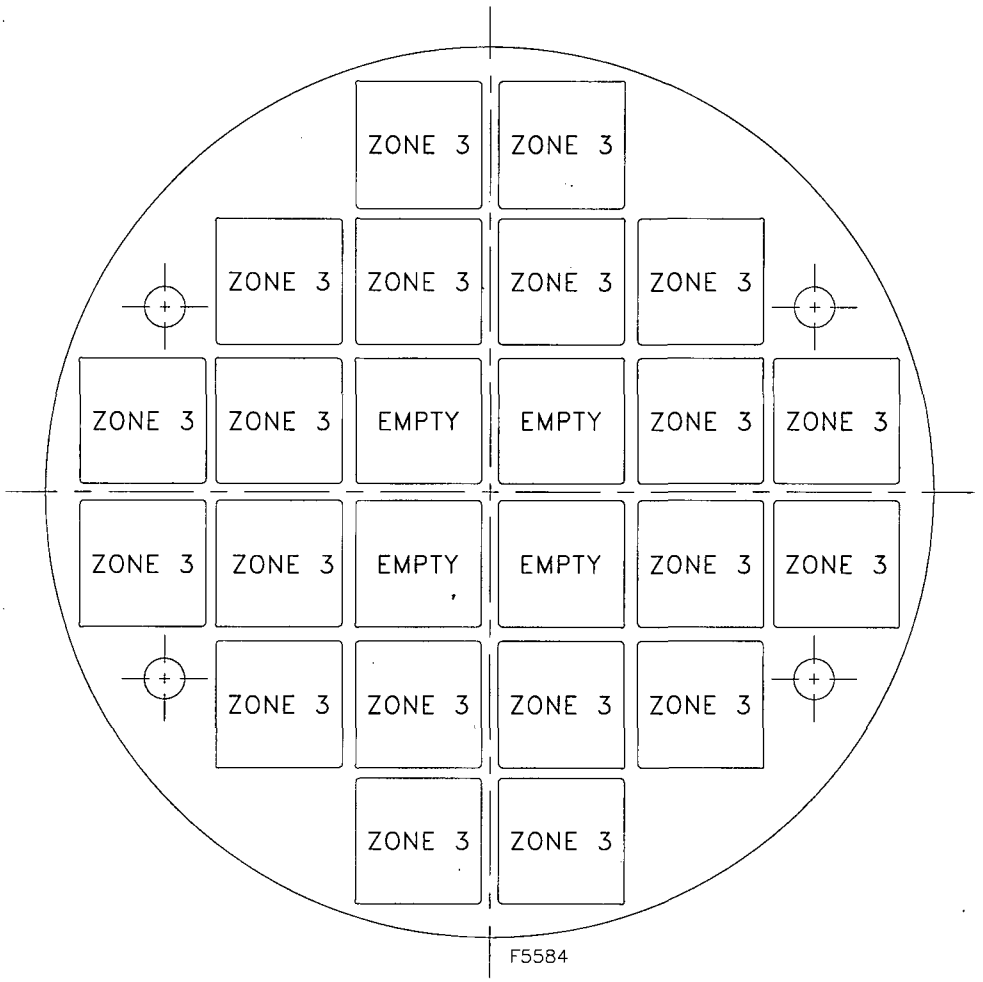

	Zone 1	Zone 2	Zone 3
Maximum Decay Heat (kW/FA)	N/A	N/A	1.3
Maximum Decay Heat per Zone (kW)	N/A	N/A	24.0

Figure 1-9
Heat Load Zoning Configuration for Fuel Assemblies (with or without BPRAs) Stored in NUHOMS®-24PHB DSC – Configuration 2

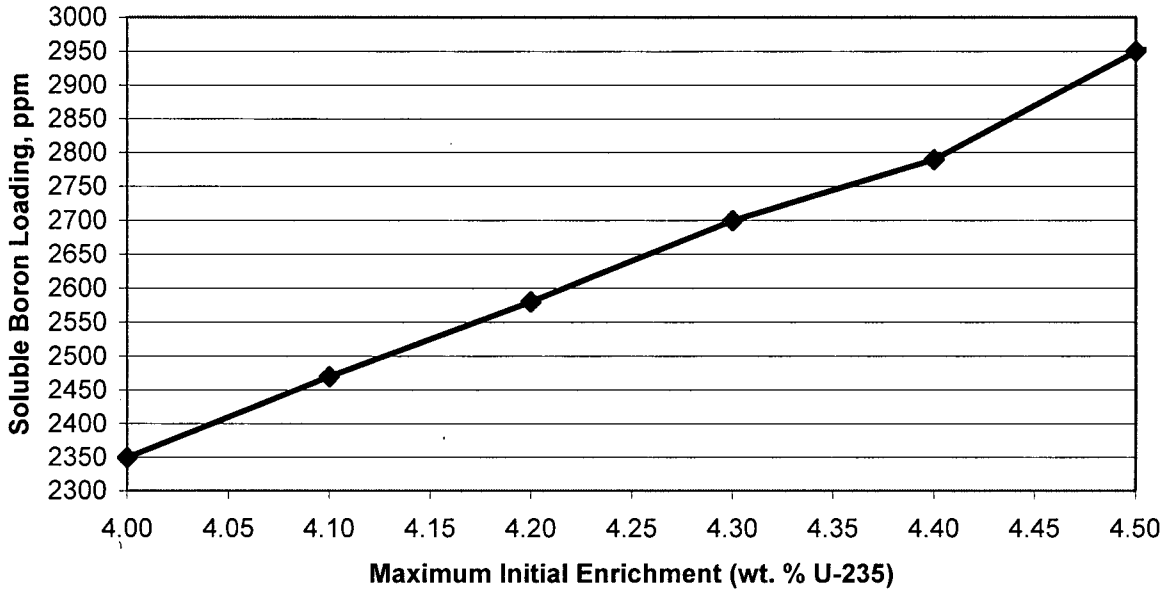

Linear Interpolation allowed between points

Initial Enrichment	Boron Loading, ppm
≤ 4.0	2350
4.1	2470
4.2	2580
4.3	2700
4.4	2790
4.5	2950

Figure 1-10
Soluble Boron Concentration vs. Fuel Initial U-235 Enrichment for the 24PHB System

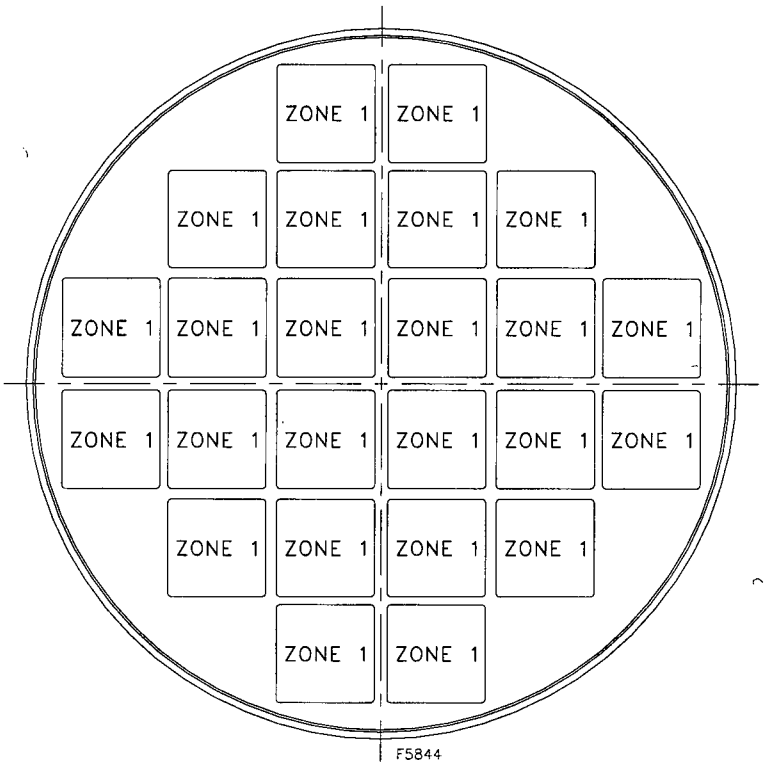

	Zone 1	Zone 2	Zone 3	Zone 4
Maximum Decay Heat (kW/FA)	1.7	N/A	N/A	N/A
Maximum Decay Heat per Zone (kW)	40.8	N/A	N/A	N/A

Figure 1-11
Heat Load Zoning Configuration No. 1 for 24PTH-S and 24PTH-L DSCs (with or without Control Components)

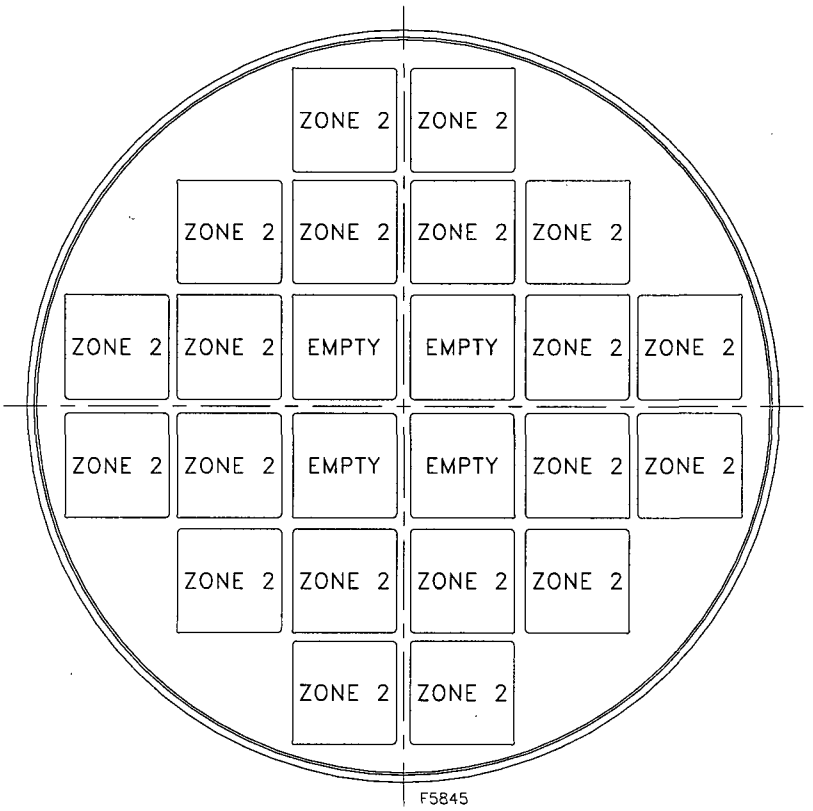

	Zone 1	Zone 2	Zone 3	Zone 4
Maximum Decay Heat (kW/FA)	N/A	2	N/A	N/A
Maximum Decay Heat per Zone (kW)	N/A	40	N/A	N/A

Figure 1-12
Heat Load Zoning Configuration No. 2 for 24PTH-S and 24PTH-L DSCs (with or without Control Components)

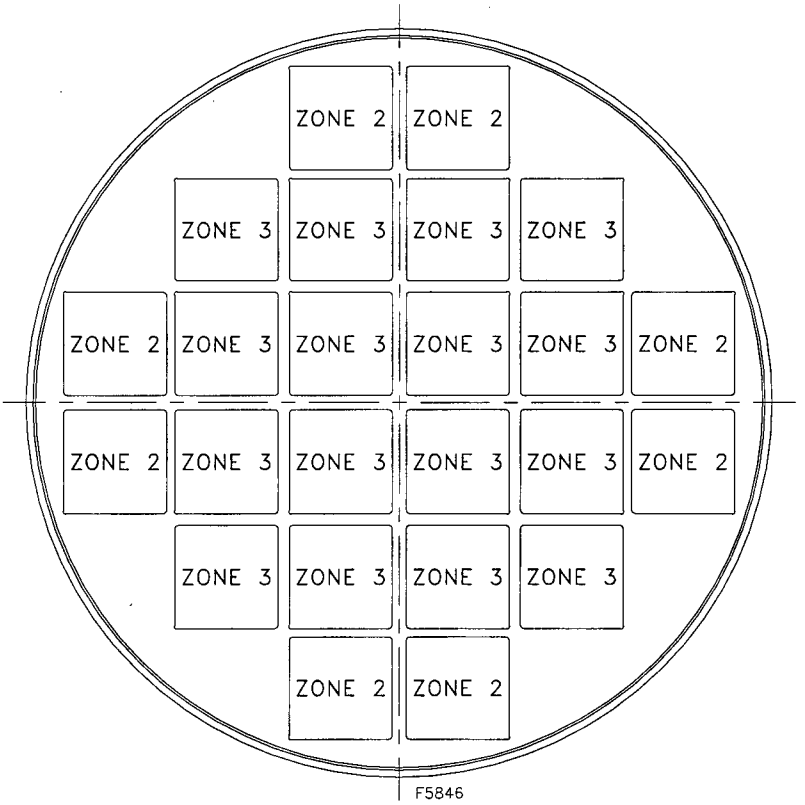

	Zone 1	Zone 2	Zone 3	Zone 4
Maximum Decay Heat (kW/FA)	N/A	2	1.5	N/A
Maximum Decay Heat per Zone (kW)	N/A	16	24	N/A

Figure 1-13
Heat Load Zoning Configuration No. 3 for 24PTH-S and 24PTH-L DSCs (with or without Control Components)

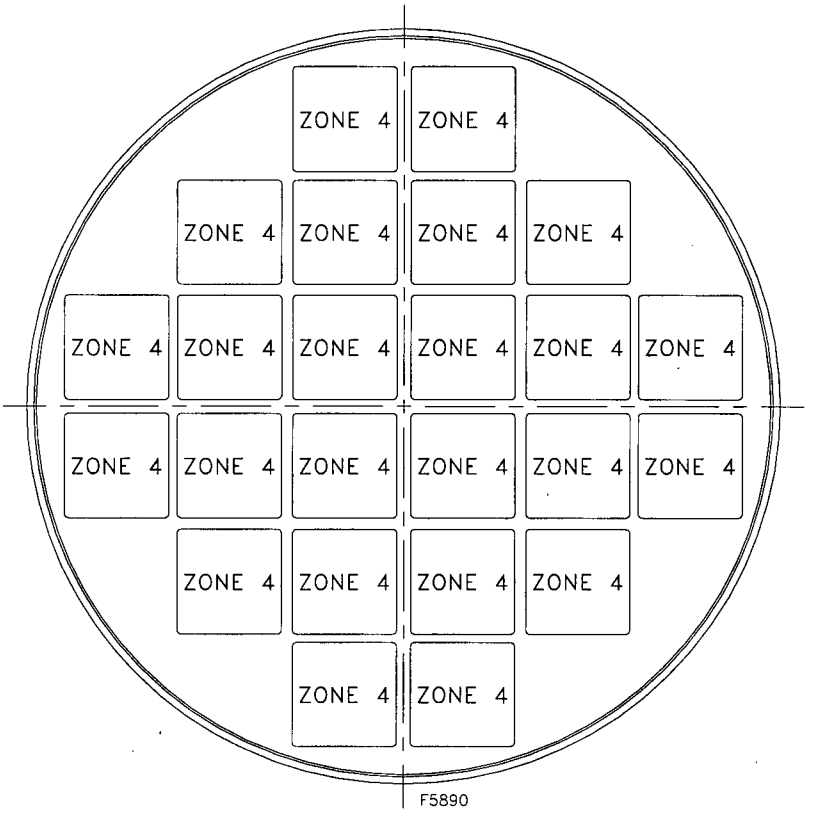

	Zone 1	Zone 2	Zone 3	Zone 4
Maximum Decay Heat (kW/FA)	N/A	N/A	N/A	1.3
Maximum Decay Heat per Zone (kW)	N/A	N/A	N/A	31.2

Figure 1-14
Heat Load Zoning Configuration No. 4 for 24PTH-S and 24PTH-L DSCs (with or without Control Components)

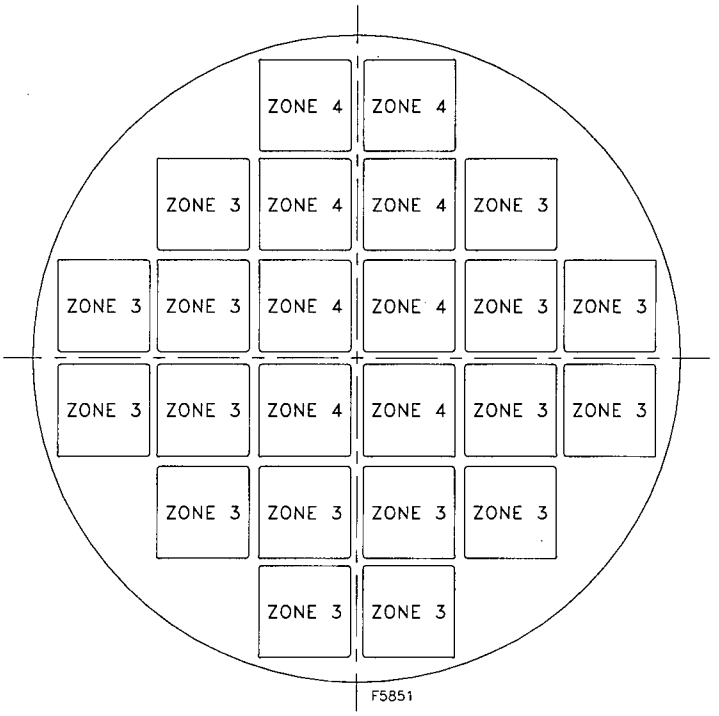

	Zone 1	Zone 2	Zone 3	Zone 4
Maximum Decay Heat (kW/FA)	N/A	N/A	1.5	1.3
Maximum Decay Heat per Zone (kW)	N/A	N/A	Note 1	10.4

Notes:
1. Fuel assemblies with a maximum heat load of 1.5 kW are permitted in Zone 3 as long as the total of 24 kW/canister maximum heat load is maintained.
2. This configuration is applicable to Basket Types 2A, 2B, or 2C only (without aluminum inserts).

Figure 1-15
Heat Load Zoning Configuration No. 5 for 24PTH-S-LC DSC
(with or without Control Components)[2]

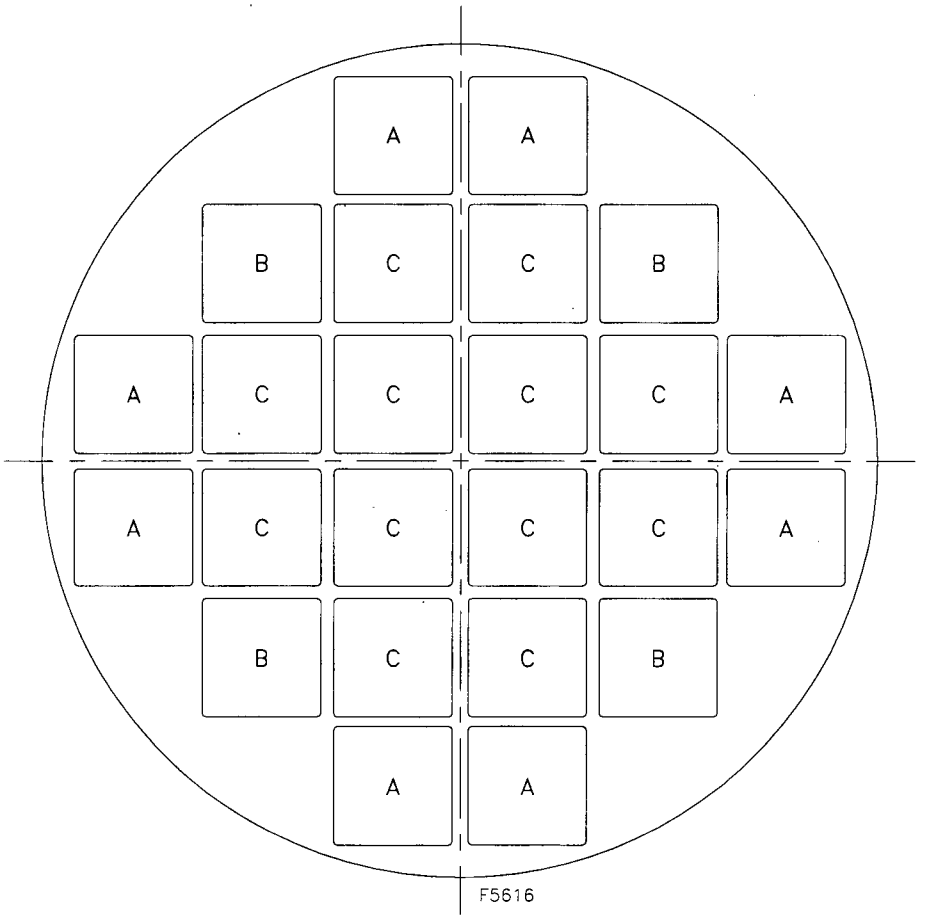

Notes:

1. Locations identified as "A" are for placement of up to 8 damaged or intact fuel assemblies.
2. Locations identified as "B" are for placement of up to 4 additional damaged or intact fuel assemblies (Maximum of 12 damaged fuel assemblies allowed, Locations "A" and "B" combined).
3. Locations identified as "C" are for placement of up to 12 intact fuel assemblies, including 4 empty slots in the center as shown in Figure 1-12.

Figure 1-16
Location of Damaged Fuel Inside 24PTH DSC[(1)(2)(3)]

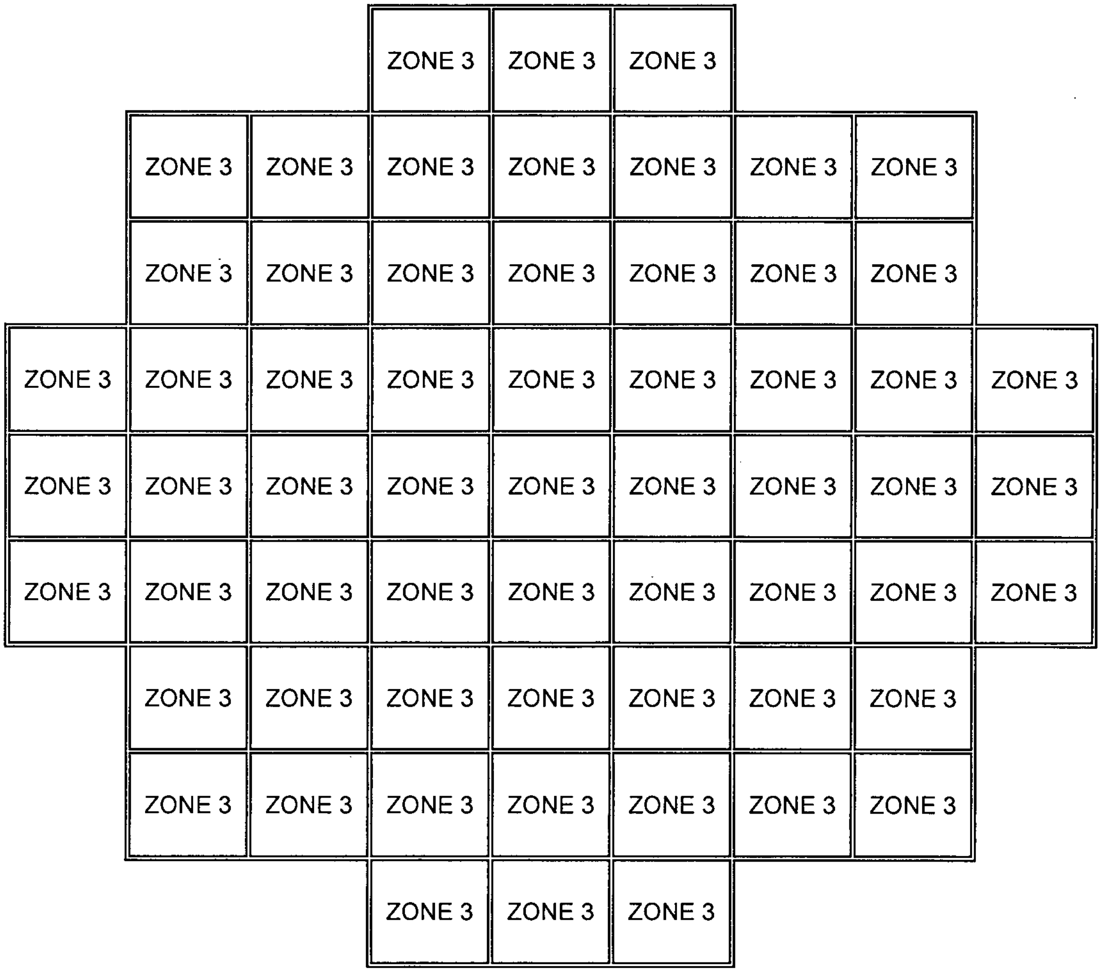

	Zone 1	Zone 2	Zone 3	Zone 4	Zone 5	Zone 6
Maximum Decay Heat (kW/FA)	NA	NA	0.393	NA	NA	NA
Maximum Decay Heat per Zone (kW)	NA	NA	22.0	NA	NA	NA
Maximum Decay Heat per DSC (kW)	22.0					

Note: This configuration is not allowed for a Type 1 61BTH DSC with MMC or Boral® Poison Plates.

Figure 1-17
Heat Load Zoning Configuration No. 1 for Type 1 or Type 2 61BTH DSCs

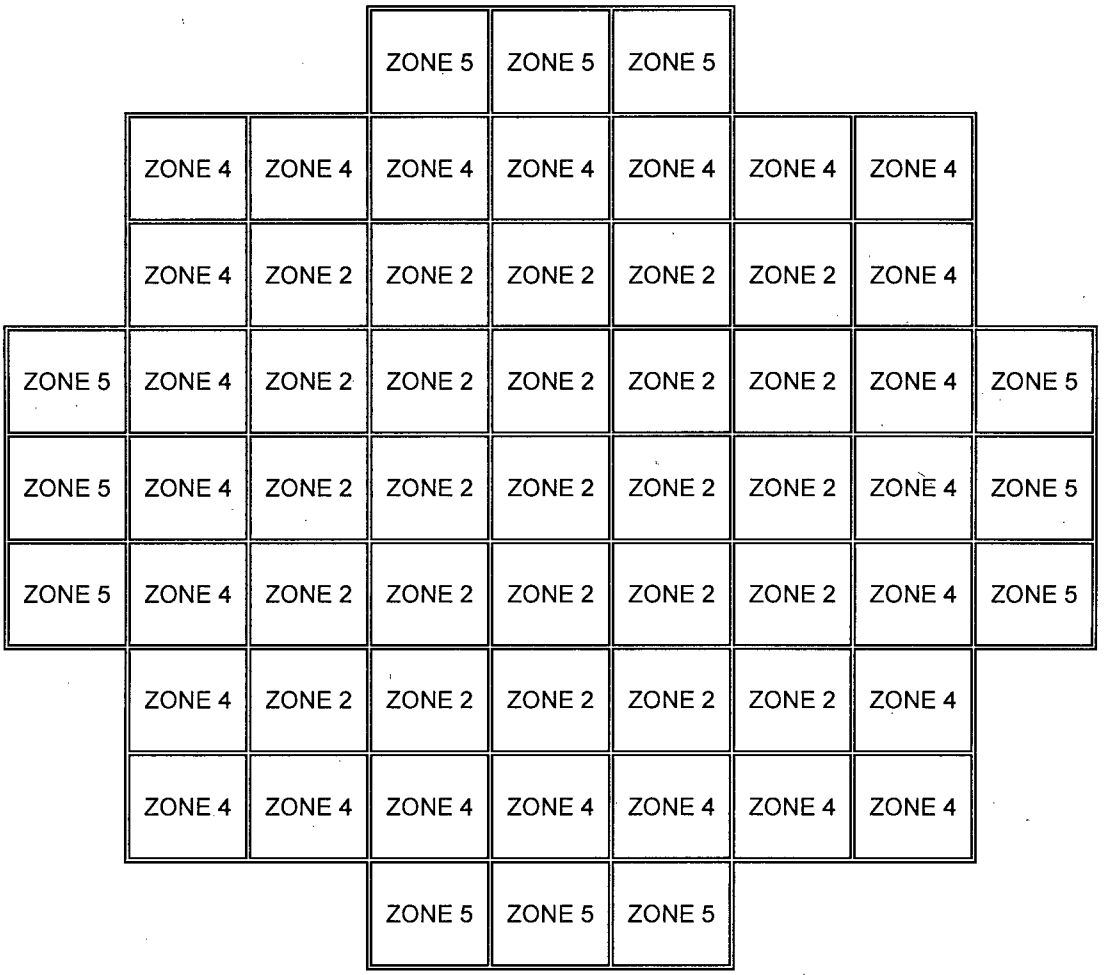

	Zone 1	Zone 2	Zone 3	Zone 4	Zone 5	Zone 6
Maximum Decay Heat (kW/FA)	NA	0.35	NA	0.48	0.54	NA
Maximum Decay Heat per Zone (kW)	NA	8.75	NA	11.52	6.48	NA
Maximum Decay Heat per DSC (kW)	22.0(2)					

Notes

1: This configuration is not allowed for a Type 1 61BTH DSC with MMC or Boral® Poison Plates.

2: Adjust payload to maintain total DSC heat load within the specified limit.

Figure 1-18
Heat Load Zoning Configuration No. 2 for Type 1 or Type 2 61BTH DSCs(1)

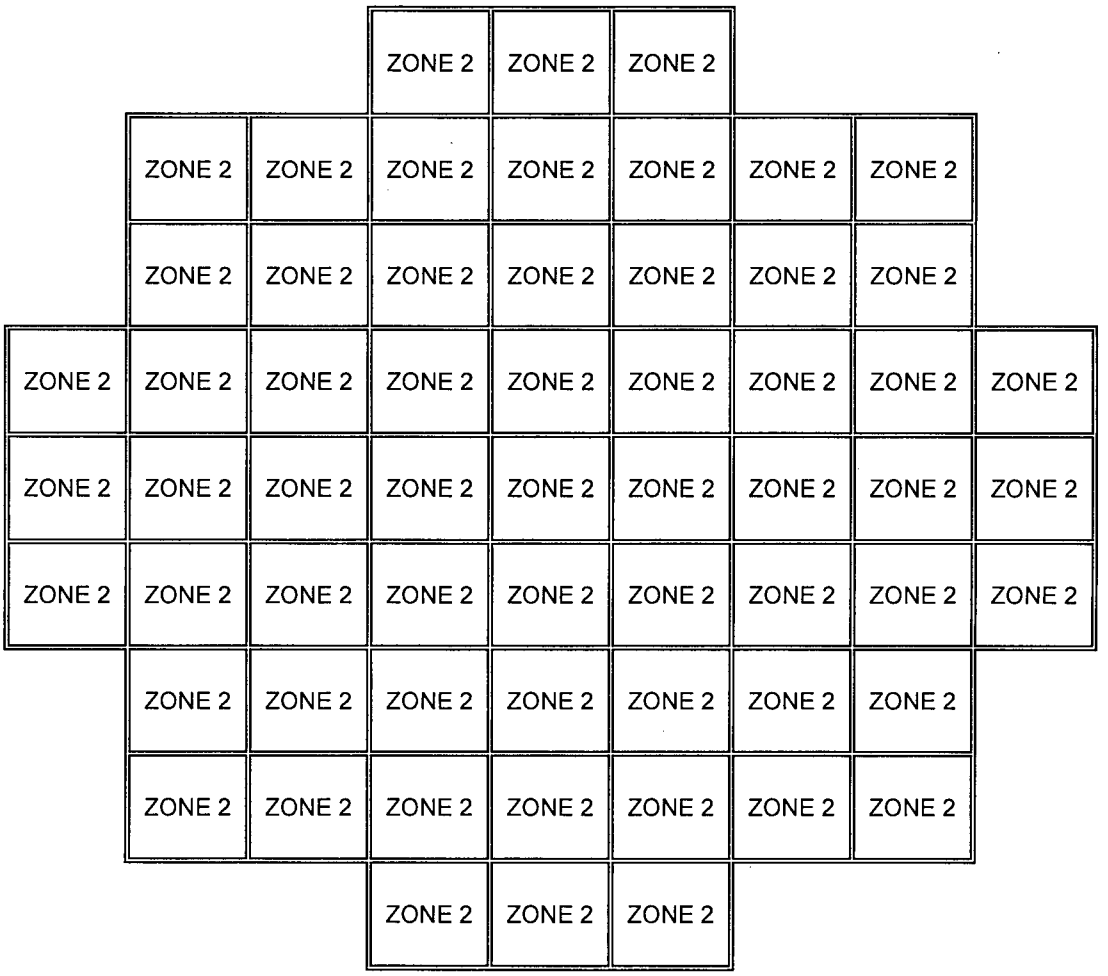

	Zone 1	Zone 2	Zone 3	Zone 4	Zone 5	Zone 6
Maximum Decay Heat (kW/FA)	NA	0.35	NA	NA	NA	NA
Maximum Decay Heat per Zone (kW)	NA	19.4	NA	NA	NA	NA
Maximum Decay Heat per DSC (kW)	19.4					

Note: This configuration does not have any restrictions as to the applicable Basket Poison Plates.

Figure 1-19
Heat Load Zoning Configuration No. 3 for Type 1 or Type 2 61BTH DSCs

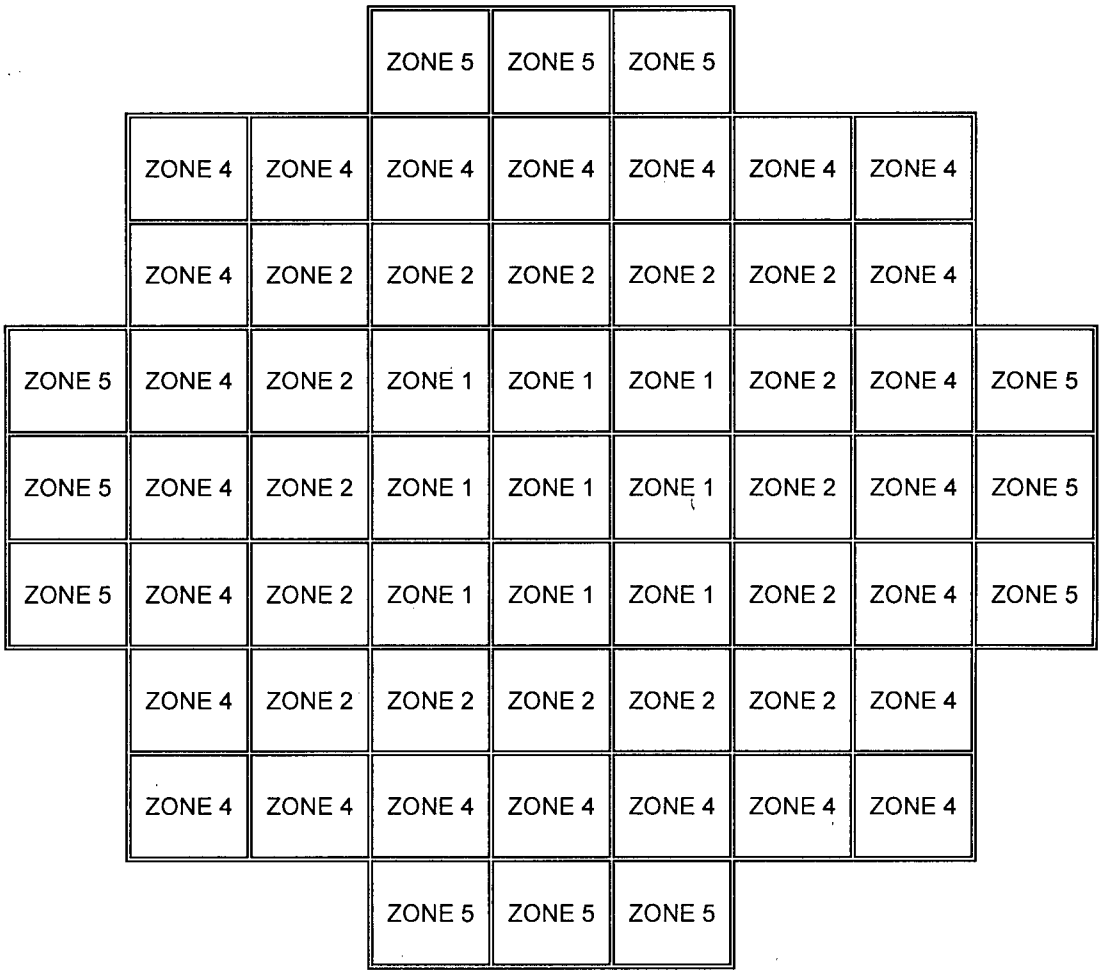

	Zone 1	Zone 2	Zone 3	Zone 4	Zone 5	Zone 6
Maximum Decay Heat (kW/FA)	0.22	0.35	NA	0.48	0.54	NA
Maximum Decay Heat per Zone (kW)	1.98	5.60	NA	11.52	6.48	NA
Maximum Decay Heat per DSC (kW)	19.4(2)					

Notes

1: This configuration does not have any restrictions as to the applicable Basket Poison Plates.

2: Adjust payload to maintain total DSC heat load within the specified limit.

Figure 1-20
Heat Load Zoning Configuration No. 4 for Type 1 or Type 2 61BTH DSCs(1)

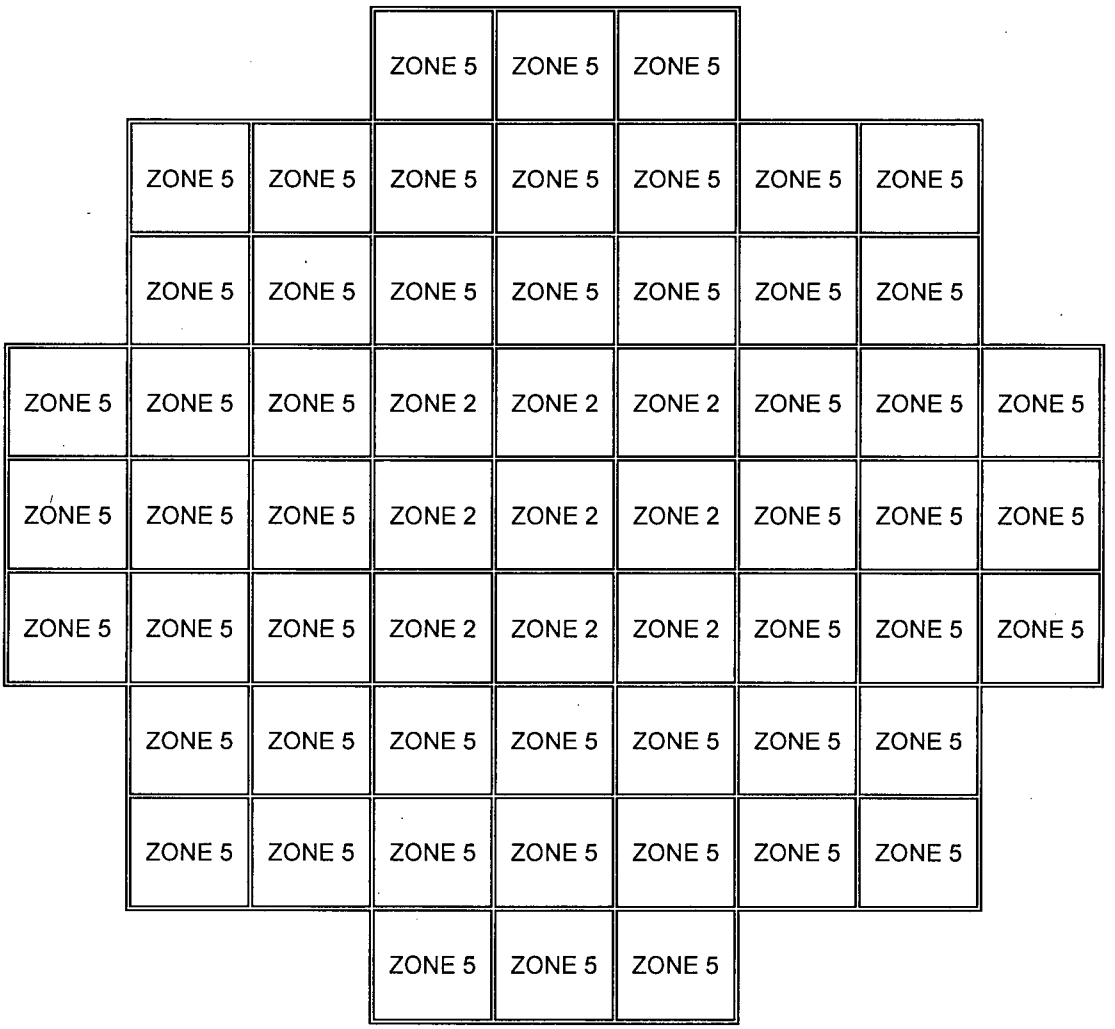

	Zone 1	Zone 2	Zone 3	Zone 4	Zone 5	Zone 6
Maximum Decay Heat (kW/FA)	NA	0.35	NA	NA	0.54	NA
Maximum Decay Heat per Zone (kW)	NA	3.15	NA	NA	28.08	NA
Maximum Decay Heat per DSC (kW)	31.2(2)					

Notes:

1: This configuration is applicable to a Type 2 61BTH DSC only with Borated Aluminum Poison Plates.

2: Adjust payload to maintain total DSC heat load within the specified limit.

Figure 1-21
Heat Load Zoning Configuration No. 5 for Type 2 61BTH DSCs(1)

			ZONE 5	ZONE 5	ZONE 5			
	ZONE 4	ZONE 4	ZONE 4	ZONE 4	ZONE 4	ZONE 4	ZONE 4	
	ZONE 4	ZONE 6	ZONE 6	ZONE 6	ZONE 6	ZONE 6	ZONE 4	
ZONE 5	ZONE 4	ZONE 6	ZONE 1	ZONE 1	ZONE 1	ZONE 6	ZONE 4	ZONE 5
ZONE 5	ZONE 4	ZONE 6	ZONE 1	ZONE 1	ZONE 1	ZONE 6	ZONE 4	ZONE 5
ZONE 5	ZONE 4	ZONE 6	ZONE 1	ZONE 1	ZONE 1	ZONE 6	ZONE 4	ZONE 5
	ZONE 4	ZONE 6	ZONE 6	ZONE 6	ZONE 6	ZONE 6	ZONE 4	
	ZONE 4	ZONE 4	ZONE 4	ZONE 4	ZONE 4	ZONE 4	ZONE 4	
			ZONE 5	ZONE 5	ZONE 5			

	Zone 1	Zone 2	Zone 3	Zone 4	Zone 5	Zone 6
Maximum Decay Heat (kW/FA)	0.22	NA	NA	0.48	0.54	0.70
Maximum Decay Heat per Zone (kW)	1.98	NA	NA	11.52	6.48	11.20
Maximum Decay Heat per DSC (kW)	31.2(2)					

Notes:

1: This configuration is applicable to a Type 2 61BTH DSC only with Borated Aluminum Poison Plates.

2: Adjust payload to maintain total DSC heat load within the specified limit.

Figure 1-22
Heat Load Zoning Configuration No. 6 for Type 2 61BTH DSCs(1)

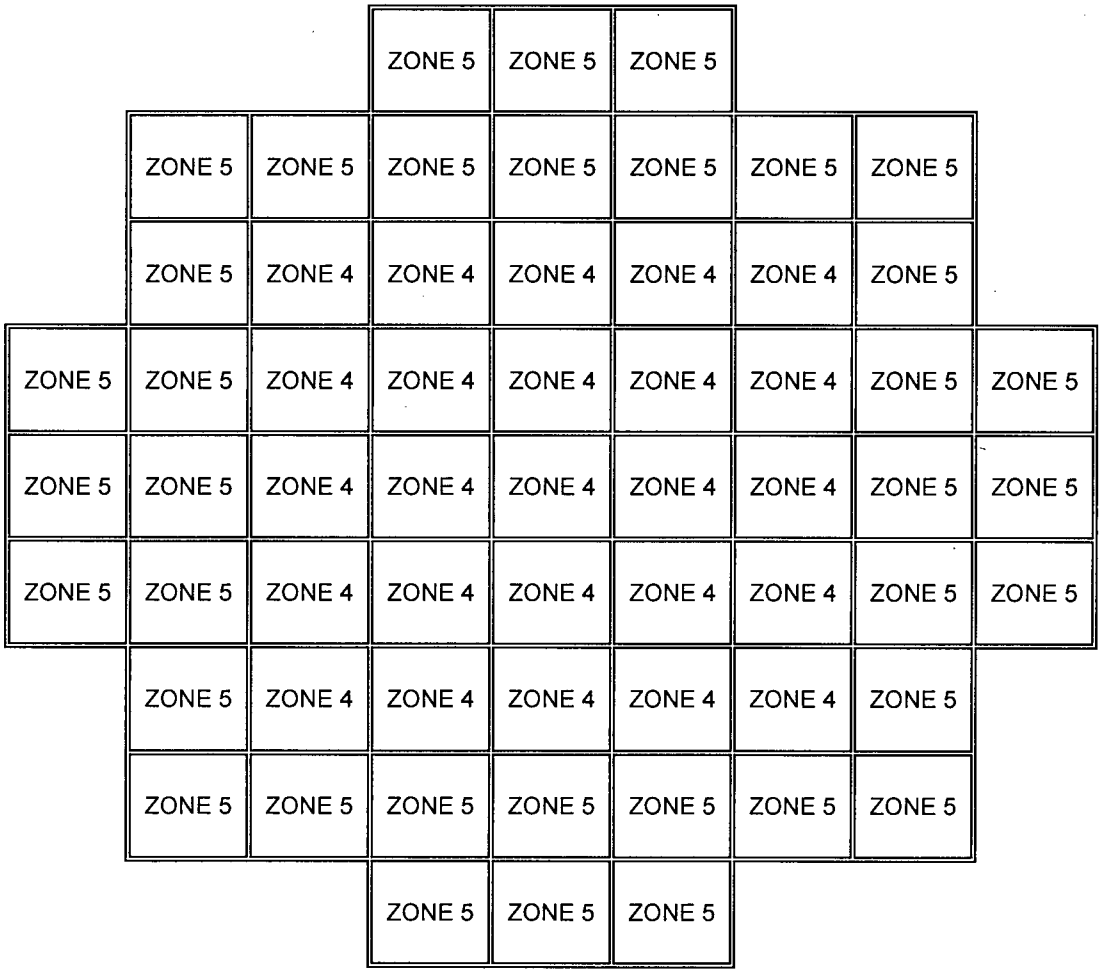

	Zone 1	Zone 2	Zone 3	Zone 4	Zone 5	Zone 6
Maximum Decay Heat (kW/FA)	NA	NA	NA	0.48	0.54	NA
Maximum Decay Heat per Zone (kW)	NA	NA	NA	12.00	19.44	NA
Maximum Decay Heat per DSC (kW)	31.2(2)					

Notes

1: This configuration is applicable to a Type 2 61BTH DSC only with Borated Aluminum Poison Plates.

2: Adjust payload to maintain total DSC heat load within the specified limit.

Figure 1-23
Heat Load Zoning Configuration No. 7 for Type 2 61BTH DSCs(1)

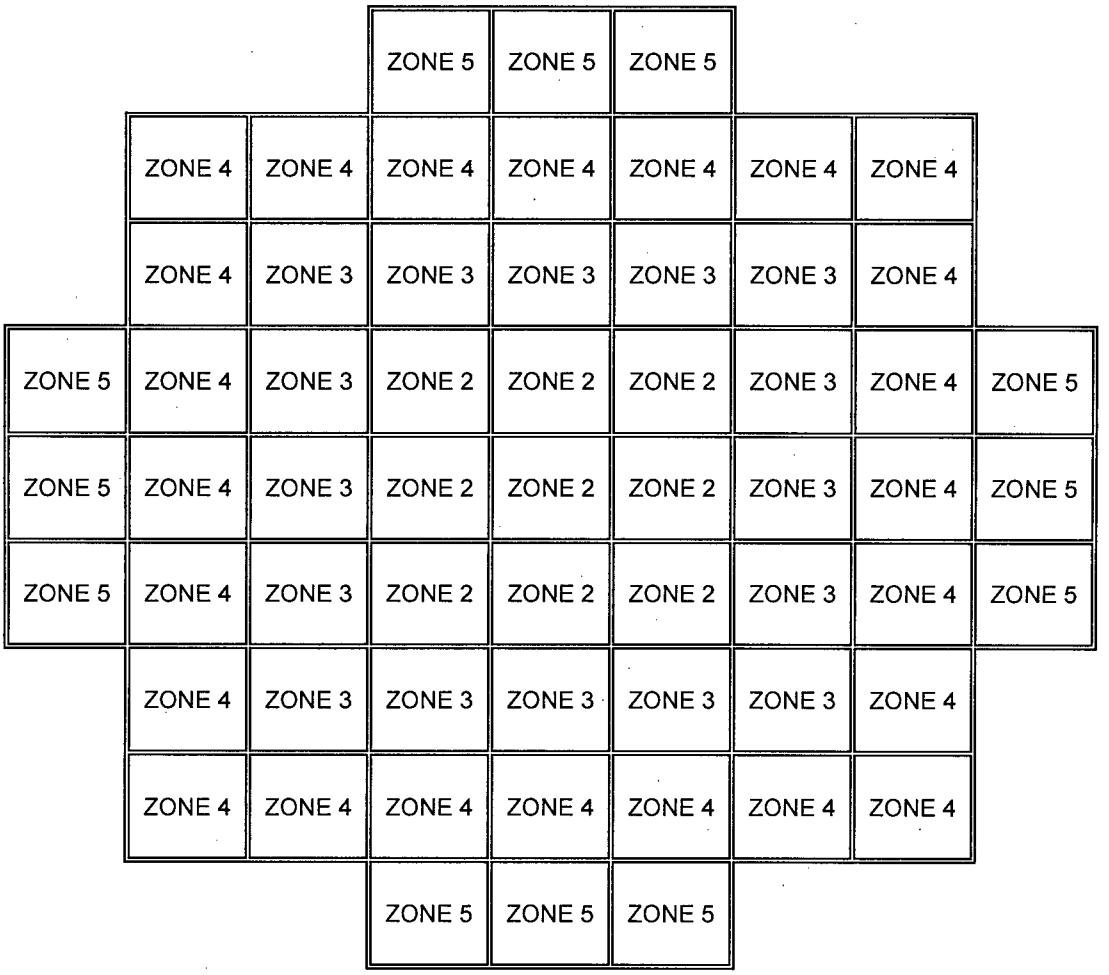

	Zone 1	Zone 2	Zone 3	Zone 4	Zone 5	Zone 6
Maximum Decay Heat (kW/FA)	NA	0.35	0.393	0.48	0.54	NA
Maximum Decay Heat per Zone (kW)	NA	3.15	6.288	11.52	6.48	NA
Maximum Decay Heat per DSC (kW)	27.4(2)					

Notes:

1: This configuration is applicable to a Type 2 61BTH DSC only with Borated Aluminum or MMC or Boral® Poison Plates.

2: Adjust payload to maintain total DSC heat load within the specified limit.

Figure 1-24
Heat Load Zoning Configuration No. 8 for Type 2 61BTH DSCs(1)

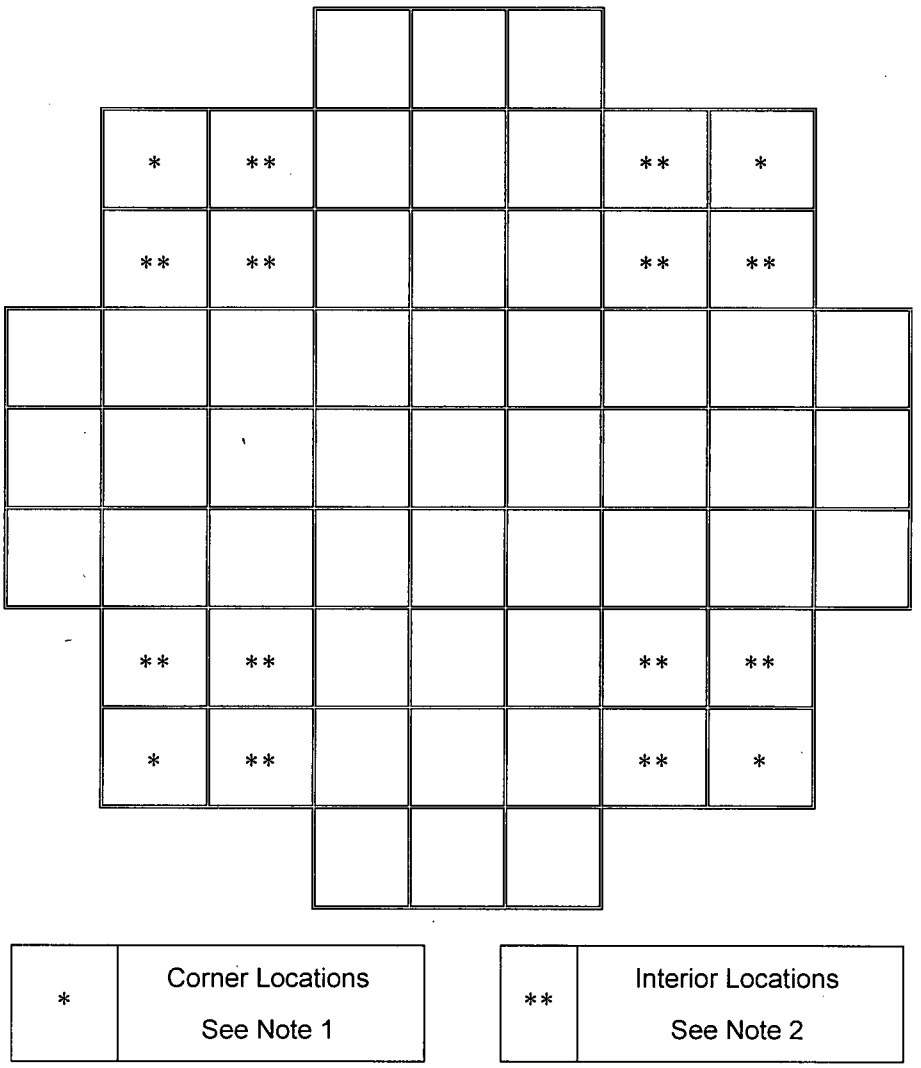

Notes:

1: These corner locations shall only be used to load up to four damaged assemblies with the remaining intact in a 61BTH Basket. The maximum lattice average initial enrichment of assemblies (damaged or intact stored in the 2x2 cells) is limited to the "up to 4 damaged assemblies" column of Table 1-1w.

2: If loading more than four damaged assemblies, place first four damaged assemblies in the corner locations per Note 1, and up to 12 additional damaged assemblies in these interior locations, with the remaining intact in a 61BTH Basket. The maximum lattice average initial enrichment of assemblies (damaged or intact stored in the 2x2 cells) is limited to the "Five or More Damaged Assemblies" column of Table 1-1w.

Figure 1-25
Location of Damaged Fuel Inside 61BTH DSC

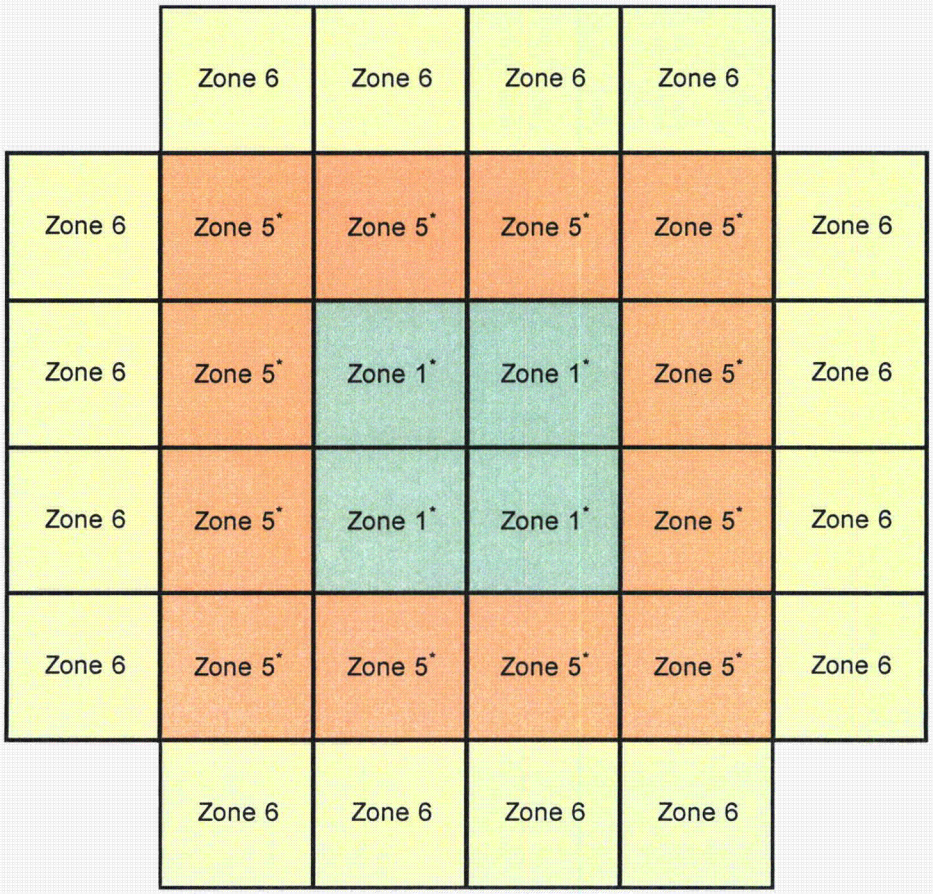

* denotes location where intact or damaged fuel assembly can be stored.

	Zone 1	Zone 2	Zone 3	Zone 4	Zone 5	Zone 6
Max. Decay Heat / FA (kW)	0.6	N/A	N/A	N/A	1.3(1)	1.5
Max. Decay Heat / Zone (kW)	2.4	N/A	N/A	N/A	15.6	24.0
Max. Decay Heat / DSC (kW)	40.8(2)					

Notes:

1: 1.2 kW per FA is the maximum decay heat allowed for damaged fuel assemblies.

2: Adjust payload to maintain 40.8 kW heat load.

Figure 1-26
Heat Load Zoning Configuration No. 1 for 32PTH1-S, 32PTH1-M and 32PTH1-L DSCs (Type 1 Baskets)

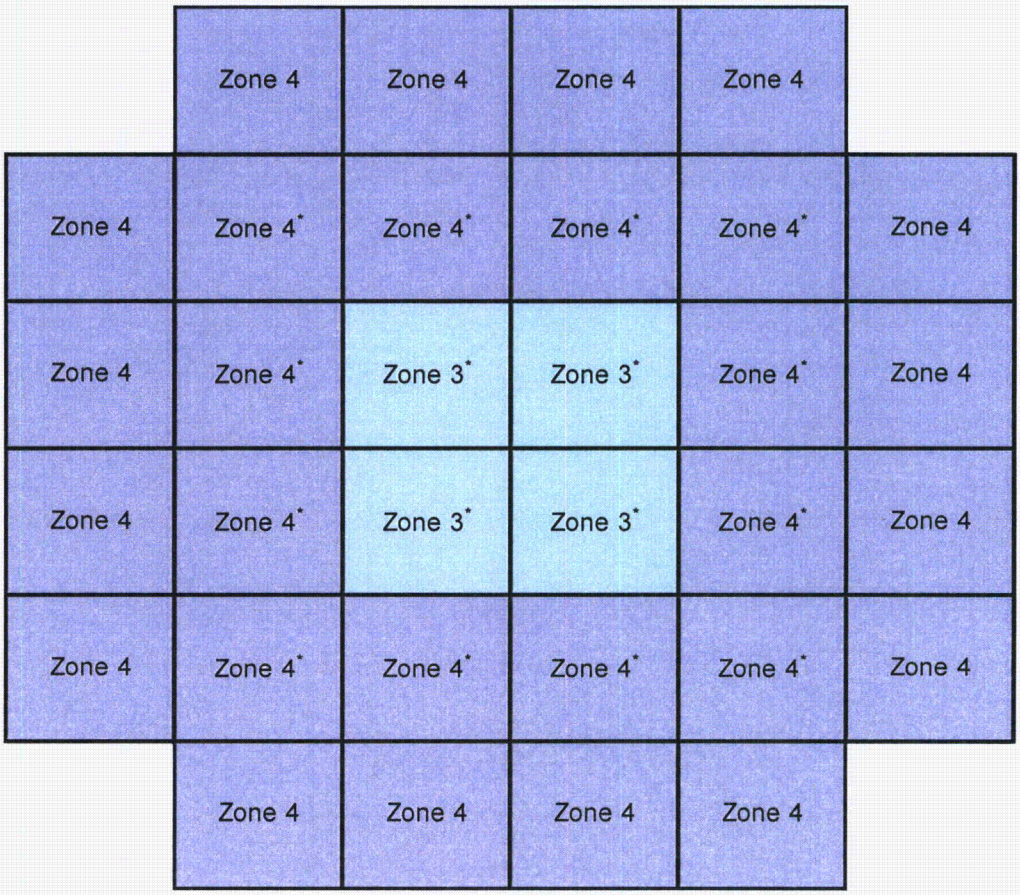

* denotes location where intact or damaged fuel assembly can be stored.

	Zone 1	Zone 2	Zone 3	Zone 4	Zone 5	Zone 6
Max. Decay Heat / FA (kW)	N/A	N/A	0.96(2)	0.98(2)	N/A	N/A
Max. Decay Heat / Zone (kW)	N/A	N/A	3.84	27.44	N/A	N/A
Max. Decay Heat / DSC (kW)	31.2(1)					
	Zone 1	Zone 2	Zone 3	Zone 4	Zone 5	Zone 6
Max. Decay Heat / FA (kW)	N/A	N/A	0.96(2)	0.98(2)	N/A	N/A
Max. Decay Heat / Zone (kW)	N/A	N/A	3.84	27.44	N/A	N/A
Max. Decay Heat / DSC (kW)	31.2(1)					

Notes:

1: Adjust payload to maintain 31.2 kW heat load.

2: The fuel qualification table corresponding to 1.0 kW/FA shall be used to determine burnup, cooling time, and enrichments corresponding to these heat loads.

Figure 1-27
Heat Load Zoning Configuration No. 2 for 32PTH1-S, 32PTH1-M and 32PTH1-L DSCs (Type 1 or Type 2 Baskets)

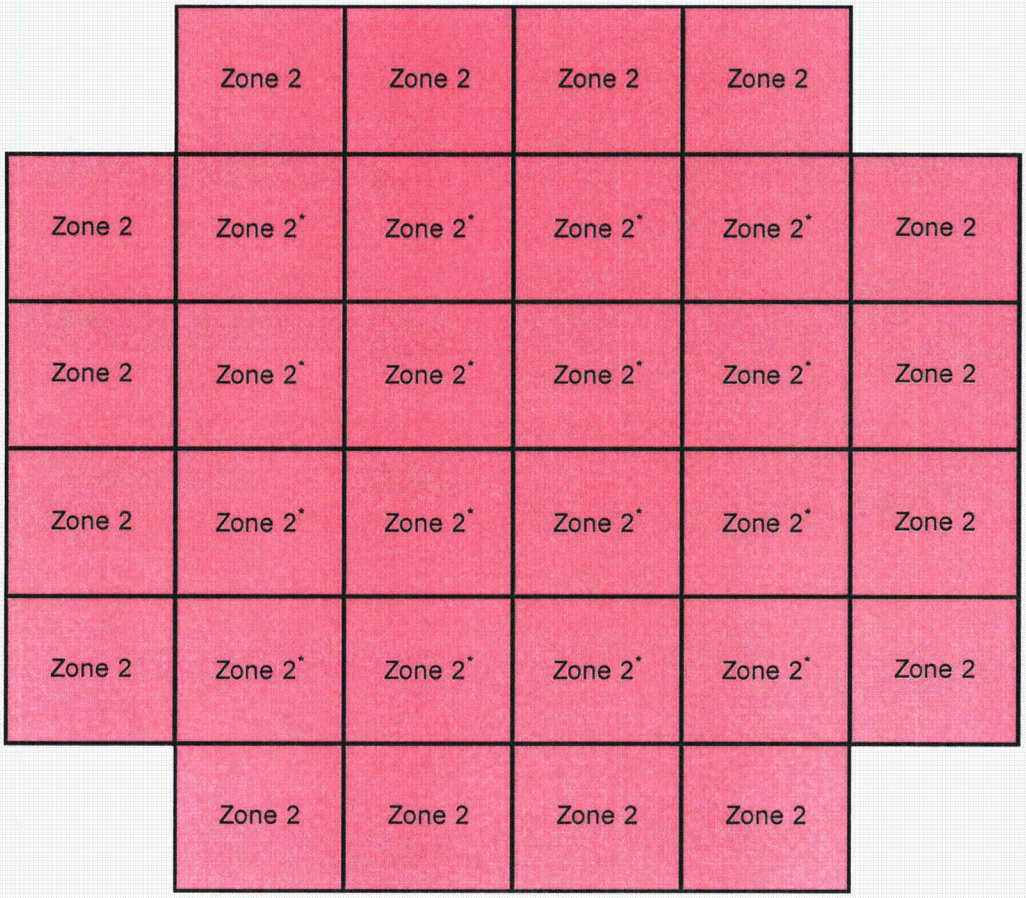

* denotes location where intact or damaged fuel assembly can be stored.

	Zone 1	Zone 2	Zone 3	Zone 4	Zone 5	Zone 6
Max. Decay Heat / FA (kW)	N/A	0.8	N/A	N/A	N/A	N/A
Max. Decay Heat / Zone (kW)	N/A	24.0	N/A	N/A	N/A	N/A
Max. Decay Heat / DSC (kW)	24.0(1)					

Notes:

1: Adjust payload to maintain 24.0 kW heat load.

Figure 1-28
Heat Load Zoning Configuration No. 3 for 32PTH1-S, 32PTH1-M and 32PTH1-L DSCs (Type 1 or Type 2 Baskets)

between the edge of the cover plate and the DSC shell. This weld provides the inner seal for the DSC.

DSC Drying and Backfilling: The initial blow-down of the DSC is accomplished by pressurizing the vent port with helium. The remaining liquid water in the DSC cavity is forced out the siphon tube and routed back to the fuel pool or to the plant's liquid radwaste processing system, as appropriate. The DSC is then evacuated to remove the residual liquid water and water vapor in the DSC cavity. When the system pressure has stabilized, the DSC is backfilled with helium and re-evacuated. The second backfill and evacuation ensures that the reactive gases remaining are less than 0.25% by volume. After the second evacuation, the DSC is again backfilled with helium and slightly pressurized. A helium leak test of the inner seal weld is then performed. The helium pressure is then reduced, the helium lines removed, and the siphon and vent port penetrations seal welded closed.

Outer DSC Sealing: After helium backfilling, the DSC outer top cover plate is installed by placing a second seal weld between the cover plate and the DSC shell. Together with the inner seal weld, this weld provides a redundant seal at the upper end of the DSC. The lower end has redundant seal welds which are installed and tested during fabrication. The NUHOMS®-61BT, 32PT, 24PHB, 24PTH, *61BTH and 32PTH1* DSCs are designed and tested to be leak tight per ANSI N14.5-1997 as described in Appendices K, M, N, P, *T and U*, respectively.

Cask/DSC Annulus Draining and Top Cover Plate Placement: The transfer cask is drained, removing the demineralized water from the cask/DSC annulus. A swipe is then taken over the DSC exterior at the DSC top cover plate and the upper portion of the DSC shell. Clean demineralized water is flushed through the cask/DSC annulus to remove any contamination left on the DSC exterior as required. The transfer cask top cover plate is then put in place using the plant's crane. The cask lid is bolted closed for subsequent handling operations.

Placement of Cask on Transport Trailer Skid: The transfer cask is then lifted onto the cask support skid. The plant's crane is used to downend the cask from a vertical to a horizontal position. The cask is then secured to the skid and readied for the subsequent transport operations.

Transport of Loaded Cask to HSM: Once loaded and secured, the transport trailer is towed to the ISFSI along a predetermined route on a prepared road surface. Upon entering the ISFSI secured area, the transfer cask is generally positioned and aligned with the particular HSM in which a DSC is to be transferred.

Cask/HSM Preparation: At the ISFSI with the transfer cask generally positioned in front of the HSM, the cask top cover plate is removed. The transfer trailer is then backed into close proximity with the HSM and the HSM door is removed. The skid positioning system is used for the final alignment and docking of the cask with the HSM.

Loading DSC into HSM: After final alignment of the transfer cask, HSM, and hydraulic ram; the DSC is pushed into the HSM by the hydraulic ram (located at the rear of the cask).

Once inside the HSM, the DSC and its payload of SFAs is in passive dry storage. Safe storage in the HSM is assured by a natural convection heat removal system, and massive concrete walls and slabs which act as biological radiation shields. The storage operation of the HSMs and DSCs is totally passive. No active systems are required.

3.1.2.1 Handling and Transfer Equipment

The handling and transfer equipment required to implement the NUHOMS® system includes a cask handling crane at the reactor fuel pool, a cask lifting yoke, a transfer cask, a cask support skid and positioning system, a low profile heavy haul transport trailer and a hydraulic ram system. This equipment is designed and tested to applicable governmental and industrial standards and is maintained and operated according to the manufacturer's specifications. Performance criteria for this equipment, excluding the fuel/reactor building cask handling crane, is given in the following sections. The criteria are summarized in Table 3.1-7.

On-Site Transfer Cask: The on-site transfer cask used for the NUHOMS® system has certain basic features. The DSC is transferred from the plant's fuel pool to the HSM inside the transfer cask. The cask provides neutron and gamma shielding adequate for biological protection at the outer surface of the cask. The cask is capable of rotation, from the vertical to the horizontal position on the support skid. The cask has a top cover plate which is fitted with a lifting eye allowing removal when the cask is oriented horizontally. The cask is capable of rejecting the design basis decay heat load to the atmosphere assuming the most severe ambient conditions postulated to occur during normal, off-normal and accident conditions. For the NUHOMS®-24P, 24PHB DSC or the NUHOMS®-24PT2 DSC, the standardized transfer cask has a cylindrical cavity of 1.73m (68 inches) diameter and 4.75m (186.75 inches) in length and a maximum dry payload capacity of 42,321 Kg (93,300 pounds). For the NUHOMS®-52B or NUHOMS®-61BT, the standardized transfer cask is fitted with an extension collar to accommodate the longer BWR DSC and fuel. Alternatively, the OS197 and OS197H transfer casks with a full length cavity of 5.0m (196.75 inches) may be used for the NUHOMS®-24P, 24PHB (with cask spacer), NUHOMS®-52B, NUHOMS®-61BT DSCs, NUHOMS®-24PT2 DSC (with cask spacer) or NUHOMS®-32PT DSC (with cask spacer). The OS197 and OS197H casks can carry a maximum dry payload of 44,100 kg (97,250 lb) and 52,600 kg (116,000 lb), respectively. These payload capacities are based on a transfer cask weight of 111,250 pounds. The cask and the associated lifting yoke are designed and operated such that the consequences of a postulated drop satisfy the current 10CFR50 licensing bases for the vast majority of plants. *See Appendix T for the description of OS197FC-B/OS197HFC-B transfer cask and Appendix U for description of the OS200 transfer cask. Appendix W provides a detailed description of the OS197L transfer cask.* 72.48

The NUHOMS® transfer cask is designed to meet the requirements of 10CFR72 (3.6) for normal, off-normal and accident conditions. The NUHOMS® transfer cask is designed for the following conditions:

Table 3.1-2
Principal Acceptance Parameters for BWR Fuel to be Stored in NUHOMS® -52B DSC

Title or Parameter	Specifications
Fuel	Only intact, unconsolidated BWR fuel assemblies with the following requirements
Physical Parameters	
Maximum Assembly Length (unirradiated)	176.16 in
Nominal *Cross-Sectional Envelope**	5.454 in
Maximum Assembly Weight	725 lbs
No. of Assemblies per DSC	≤ 52 intact channeled assemblies
Fuel Cladding	Zircaloy-clad fuel with no known or suspected gross cladding breaches
Nuclear Parameters	
Fuel Initial Lattice Enrichment	≤ 4.0 wt. % U-235
Fuel Burnup and Cooling Time	Per Table 3.1-8b
Alternate Nuclear Parameters	
Initial Enrichment	≤ 4.0 wt. % U-235
Burnup	≤ 35,000 MWd/MTU
Decay Heat	≤ 0.37 kW per assembly
Neutron Source	≤ 1.01×10^{8} n/sec per assy with spectrum bounded by that in Chapter 7 of FSAR
Gamma Source	≤ 2.63×10^{15} g/sec per assy with spectrum bounded by that in Chapter 7 of FSAR

* *Cross-Sectional Envelope is the outside dimension of the fuel channel.*

OR

- The coarse and fine aggregates to be one or a mix of the following: limestone, dolomite, marble, basalt, granite, rhyolite, gabbro. Determination of the aggregate constituents shall be done in accordance with the same methods described above.

For all PWR and BWR HSM components the above aggregate requirements can be waived if the criteria established by Appendix D for strength reduction is further validated by strength tests performed on the actual concrete mix to be used for construction subjected to elevated temperatures established by the design. Alternatively the minimum compressive strength requirements for the concrete may be increased to account for an appropriate reduction in concrete strength. This approach removes the need to reevaluate the HSM design analyses.

4.2.3.3 On-Site Transfer Cask

The on-site transfer cask is a nonpressure-retaining cylindrical vessel with a welded bottom assembly and bolted top cover plate. The transfer cask is designed for on-site transport of the DSC to and from the plant's spent fuel pool and the ISFSI as shown in Figure 4.2-10 and Figure 4.2-11 *(OS197 type cask is shown)*. The transfer cask provides the principal biological shielding and heat rejection mechanism for the DSC and SFAs during handling in the fuel/reactor building, DSC closure operations, transport to the ISFSI, and transfer to the HSM. The transfer cask also provides primary protection for the loaded DSC during off-normal and drop accident events postulated to occur during the transport operations. The NUHOMS® transfer cask is illustrated in Figure 1.3-6. Drawings of the *standardized/OS197 family of* transfer cask*s* are contained in Appendix E. *Appendix W, Section W.1.2 provides a detailed description of the OS197L transfer cask, which is shown in Figure W.1-1. The OS197L transfer cask relies on the use of remote operations in conjunction with supplemental shielding during handling in the fuel/reactor building, transport to the ISFSI, and transfer to the HSM operations. Drawings for the OS197L transfer cask, including the supplemental shielding components are provided in Appendix W, Section W.1.5.*

The *standardized (with solid neutron shield)* transfer cask may be fitted with a shielded collar to extend the cask cavity length to accommodate the longer NUHOMS®-52B DSC as shown in Figure 4.2-12. The collar is a heavy forged steel ring with a bolt circle to match that of the transfer cask top flange and cover plate. Alternatively, a NUHOMS® transfer cask with a longer cavity length may be used *(e.g. OS197)* for DSCs with PWR (with cask spacer) or BWR fuel.

The transfer cask to be used by a utility may be any one of the designs documented in Appendix E, *(*including the standardized cask, OS197, OS197H *or OS197L), Appendix P (OS197FC) or Appendix T (OS197FC-B) and Appendix U (OS200 transfer cask for transfer of the bigger diameter 32PTH1 DSC)*. The licensee may also use any other previously NRC reviewed and approved design such as the transfer cask designs documented in the NUHOMS®-24P Topical Report [4.13], the Oconee Nuclear Station ISFSI Safety Analysis Report [4.16], and the Calvert Cliffs ISFSI Safety Analysis Report [4.17], provided it is demonstrated prior to use that the limiting conditions of use as described in CoC 1004 can be met. 72.48

The standardized/OS197 family of transfer casks are constructed from three concentric cylindrical shells to form an inner and outer annulus. These are filled with lead and a neutron absorbing material. The two inner shells are welded to heavy forged ring assemblies at the top and bottom ends of the cask as shown in Figure 1.3-6. Rails fabricated from a hardened, non-galling, wear resistant material coated with a high contact pressure dry film lubricant are provided to facilitate DSC transfer. All surfaces exposed to fuel pool water are stainless steel. The transfer cask structural shell and the bolted top cover plate may be fabricated from carbon or stainless steel. The transfer cask carbon steel structural shell and top cover plate are coated with a durable epoxy paint which is shop applied in accordance with the manufacturer's standards. This coating system is suitable for immersion service with a continuous temperature of 250°F with intermittent temperatures to 400°F.

The method used to cast the transfer cask lead shielding will vary between fabricators. Only one transfer cask need be utilized for each ISFSI. Transfer casks for different ISFSIs may be supplied by different fabricators. Each fabricator is required to submit detailed procedures for the lead pour consistent with the requirements delineated on the Appendix E drawings. These procedures include specific locations and sealing of pour holes, temporary bracing, and controlled cooling methods for the lead, all of which must meet the applicable codes and standards.

As shown in Figure W.1.1, the OS197L transfer cask is constructed from a single, thicker (2.68"nominal thickness) structural shell in lieu of the concentric nominal ½" thick inner liner and the nominal 1.5" thick outer structural shell with lead shielding in the annular space in the OS197 transfer cask. To compensate for the lack of lead shielding, the OS197L transfer cask requires the use of supplemental shielding made up of thick steel plates, as shown in Figures W.1-2 and W.1-3. The supplemental shielding consists of a 6" thick carbon steel upper shielding bell and a lower shielding sleeve which enclose the cask in the decontamination area, and 5.5" combined thickness carbon steel plates/covers which are attached to or supported by the transfer trailer skid and which enclose the transfer cask while on the transfer trailer.

The transfer cask neutron shield cavity is fabricated as a pressure vessel since it is desirable to have this cavity remain leak tight to prevent intrusion of contaminated spent fuel pool water. Also, the support members for the outer shell of the solid neutron shield are angled at 45° with respect to the transfer cask structural shell to further enhance shielding and decay heat removal. Solid neutron shielding materials are also incorporated into the top and bottom end closures to provide effective radiological protection.

Two trunnion assemblies are provided in the upper region of the cask for lifting of the transfer cask and DSC inside the plant's fuel/reactor building, and for supporting the cask on the skid for transport to and from the ISFSI. An additional pair of trunnions in the lower region of the cask are used to position the cask on the support skid, serve as the rotation axis during down-ending of the cask, and provide support for the bottom end of the cask during transport operations. There are no testing requirements per the ASME Code for the transfer cask trunnions. Neither the transfer cask nor the trunnions are special lifting devices per ANSI N14.6. Nonetheless, for transfer casks fabricated under the General License, a one-time pre-service load test of the trunnions is performed at a load equal to 150% of the design load followed by an examination of all accessible trunnion welds. Trunnion testing is neither applicable nor required for existing

NUHOMS® transfer casks previously licensed for site specific use (e.g., Calvert Cliffs and Oconee plants).

The cask bottom ram penetration cover plate is a water tight closure used during fuel loading in the fuel pool, during DSC closure operations in the cask decon area, and during cask handling operations in the fuel/reactor building. The circular projection on the transfer cask bottom cover plate is dimensioned to ensure that the DSC does not contact any surface of the bottom cover plate assembly. Prior to cask transport from the plant's fuel/reactor building to the HSM, the bottom cover plate of the cask is removed and a temporary neutron/gamma shield plug is attached (the temporary shield plug is not utilized with the integral ram transfer trailer/skid). An illustration of the temporary shield plug design is shown in Figure 4.2-14. The temporary shield plug is a two piece construction with a center cover which is removed for ram insertion. The temporary shield plug is designed such that the contact dose rate is ALARA. The temporary shield plug may be deleted based on an ALARA evaluation.

Alignment of the DSC with the transfer cask is achieved by the use of permanent alignment marks on the DSC and transfer cask top surfaces. These marks facilitate orienting the DSC to the required azimuthal tolerances for fuel loading using the plant's fuel handling machine.

The yoke design used for cask handling is a non-redundant two point lifting device with a single pinned connection to the crane hook as shown in Figure 4.2-15. Thus, the yoke balances the cask weight between the two trunnions and has sufficient margin for any minor eccentricities in the cask vertical center of gravity which may occur. The yoke and other lifting devices are designed and fabricated to meet the requirements of ANSI N14.6 (4.9). The test load for the yoke and other lifting devices is 300% of the design load, with annual dimensional and liquid penetrant or magnetic particle inspection, to meet ANSI N14.6 requirements.

As shown in Figure 4.2-16, the cask upper flange is designed to allow an inflatable seal to be inserted between the cask liner and the DSC. The seal is fabricated from reinforced elastomeric material rated for temperatures well above boiling. The seal is placed after the DSC is located in the cask and serves to isolate the clean water in the annulus from the contaminated water in the spent fuel pool. After installation, the seal is inflated to prevent contamination of the DSC exterior surfaces by waterborne particulates.

The structural materials and licensing requirements for the NUHOMS® transfer cask are delineated on the Appendix E drawings. In general, these requirements are in accordance with the applicable portions of the ASME Code, Section III, Division 1, Subsection NC for Class 2 vessels with exceptions as discussed in Section 4.9. The cask is designated as an atmospheric pressure vessel and therefore a pressure test is not required. The cask is not N-stamped. The upper lifting trunnions and trunnion sleeves are conservatively designed in accordance with the ANSI N14.6 (4.9) stress allowable requirements for a non-redundant lifting device. All structural welds are ultrasonically or radiographically examined or tested by the dye penetrant method as appropriate for the weld joint configuration. These stringent design and fabrication requirements ensure the structural integrity of the transfer cask and performance of its intended safety function.

Once all the water has been forced out of the DSC cavity with helium, the remaining moisture contained within the cavity is removed with a vacuum drying system. The vacuum drying system evacuates the DSC cavity and lowers the moisture content to an acceptable level.

The suction line of the vacuum drying system is connected to the DSC vent and siphon ports. A hose is connected from the discharge outlet of the vacuum drying system to the plant's radioactive waste system or spent fuel pool. A particle filter is located on the suction side of the vacuum drying system. The filter is used to capture any radioactive particles that may be entrained within the gas thereby preventing contamination of the vacuum drying system. A drain in the vacuum suction line allows any liquid water remaining in the DSC cavity to be routed directly to the plant's radioactive waste system or spent fuel pool. The vacuum drying system is completely closed so that all radioactive material is confined within a controlled system.

During the drying and final sealing operations of the DSC, the inner seal weld confines any radioactive particles in the DSC cavity. The pressure boundary is formed by welding the inner top cover plate to the DSC shell using remote automatic welding equipment (see Figure 4.7-2). The vent port remains open and vented at atmosphere pressure to the plant's radwaste system during welding of the inner top cover plate. Fabricated plugs are placed over the siphon and vent port openings and welded into place. Once the DSC has been dried and backfilled with helium, the outer top cover plate is lowered onto the DSC. Again, using remote automatic welding equipment, the outer top cover plate is welded in place. These welded joints act as barriers for confining all radioactive material within the DSC throughout the service life of the DSC.

The canister Automatic Welding System consists of two major components, the welding machine itself as shown in *Figure 4.7-2*, and the control panel/power supply which is not shown. The control panel and power supply, along with the purge gas bottle, can be located at any convenient position for the operator within the range of the umbilical cables, usually about 50 feet. The use of an automatic welding machine is considered essential for ALARA operations in routine use. Manual welding of any of the closure welds is permissible, but is recommended only for purposes of weld repair or as a recovery procedure if the machine becomes non-operational during the closure process. Small weldments such as the vent and siphon port plug seals may be made manually as part of routine operations because of the short stay time required for the small weld volume.

4.7.3.2 Transfer Cask

The *typical* transfer cask is a cylindrical vessel with a bottom end closure assembly and a bolted top cover plate as shown in Figure 1.3-6. *For the standardized/OS197 type casks,* the cask's cylindrical walls are formed from three concentric steel shells with lead poured between the inner liner and the structural shell to provide gamma shielding during DSC transfer operations. The outer shell forms an annular vessel with a neutron absorbing material placed between the structural shell and outer shell to provide neutron shielding during DSC transfer operations. *The OS197L transfer cask is constructed from a single, thicker structural shell in lieu of the inner liner and outer structural shell and requires*

the use of remote operations in conjunction with supplemental shielding, as discussed in Appendix W.

The cask bottom end assembly is welded to the cylindrical shell assembly and includes two closure assemblies for the ram grapple access penetration. A water tight bolted cover plate is used for transfer operation within the plant's fuel/reactor building. The bolted ram access penetration cover plate assembly may be replaced by a two piece neutron shield plug assembly for transport operations from the plant's fuel/reactor building to the ISFSI as shown in Figure 4.2-14. Transport trailers with an integral ram will not utilize a shield plug assembly. At the ISFSI site, the inner shield plug of the neutron shield plug assembly is removed to provide access for the ram and grapple to push the DSC into the HSM.

The top cover plate is bolted to the top flange of the cask during transport from the plant's fuel/reactor building to the ISFSI. The top cover plate assembly consists of a thick structural plate with a thin shell encapsulating solid neutron shielding material. Two upper lifting trunnions are located near the top of the cask for downending/uprighting and lifting of the cask in the fuel/reactor building. Two lower trunnions, located near the base of the cask, serve as the axis of rotation during downending/uprighting operations and as supports during transport to the ISFSI.

The material selected for use as a solid neutron shield material is a cementitious shop castable, fire resistant material with a high hydrogen content which is designed for use in shielding doors, hatches, plugs, and other nuclear applications. The solid neutron shielding material used in the cask outer annular cavity, top and bottom covers, produces water vapor and a small quantity of non-condensible gases when heated above 212°F. The off-gassing produces an internal pressure which increases with temperature. As the temperature is reduced, the off-gas products are reabsorbed into the matrix, and the pressure returns to atmospheric. The maximum steady state temperature of the material is calculated conservatively for an extreme ambient day with a design basis decay heat load. This temperature, assumed to exist throughout the entire shield, results in an internal cavity pressure. This pressure is well within the design allowable value for the neutron shield cavity. The release of off-gas products (water vapor) does not affect the predicted neutron doses since the hydrogen content assumed in the shielding analysis is conservative. This is exceeded by the manufacturer's guaranteed minimum hydrogen content and actual test sample values of as-delivered product.

The material selected for the liquid neutron shield material is water. Precautionary measures shall be taken to ensure that the water does not freeze during cold weather operations.

Although the loss of the neutron shield is highly unlikely, the loss of neutron shield accident case is analyzed in Section 8.2.5.3. The transfer cask is designed to provide adequate shielding to maintain the maximum radiation surface dose to less than 5 R/hr combined gamma and neutron for a cask drop accident event assuming a complete loss of neutron shielding.

Table 4.8-1
ASME Code Alternatives for NUHOMS®-24P, 24PHB
and 52B DSC Pressure Boundary Components

Reference ASME Code Section/Article	*Code Requirement*	*Alternatives, Justification and Compensatory Measures*
NCA	*All*	*Not compliant with NCA. Quality Assurance is provided according to 10 CFR 72 Subpart G in lieu of NCA-4000.*
NCA-1140	*Use of Code editions and addenda*	*Code edition and addenda other than those specified in Section 4.2.2 may be used for construction, but in no case earlier than 3 years before that specified in the Table.* *Materials produced and certified in accordance with ASME Section II material specification from Code Editions and Addenda other than those specified in Section 4.2.2 may be used, so long the materials meet all the requirements of Article 2000 of the applicable Subsection of the Section III Edition and Addenda used for construction.*
NB-1100	*Requirements for Code Stamping of Components, Code reports and certificates, etc.*	*Code Stamping is not required. As Code Stamping is not required, the fabricator is not required to hold an ASME "N" or "NPT" stamp, or to be ASME Certified.*
NB-1132	*Attachments with a pressure retaining function, including stiffeners, shall be considered part of the component.*	*Bottom shield plug and outer bottom cover plate are outside code jurisdiction; these components together are much larger than required to provide stiffening for the inner bottom cover plate; the weld that retains the outer bottom cover plate and with it the bottom shield plug is subject to root and final PT examination.*
NB-2130 NB-4121	*Material must be supplied by ASME approved material suppliers.* Material Certification by Certificate Holder	*Material is certified to meet all ASME Code criteria but is not eligible for certification or Code Stamping if a non-ASME fabricator is used. As the fabricator is not required to be ASME certified, material certification to NB-2130 is not possible. Material traceability and certification are maintained in accordance with TN's NRC approved QA program.*
NB-4240 NB-5230	Full penetration welds are required for pressure boundary closure joints Weld examination shall be UT or RT with surface PT	<u>DSC Pressure Boundary Welds:</u> The joint details at the top and bottom end of the DSCs are not full penetration welds and thus do not comply with the requirements of figure NB-4243-1 for Category C flat head closure pressure and containment boundary welds. Volumetric weld inspection (RT or UT) is not practical due to the DSC geometry at the top and bottom closures and due to high radiation at the top closure after fuel loading (ALARA consideration). The inner and outer cover plate closure welds provide redundant closure welds, which are required by the 10CFR72 license. These welds are partial penetration welds that have been designed using a conservative "weld efficiency" factor of 0.6. Breach of the DSC confinement barriers due to an undetected flaw in any single weld layer is implausible due to the requirement for multi-layer welds. The top and bottom outer cover plate to shell welds and the inner bottom cover plate to shell weld receive a root and final PT. The top inner cover plate to shell weld, which is leak tested, has a final PT only.

Table 4.8-1
ASME Code Alternatives for NUHOMS®-24P, 24PHB and 52B DSC Pressure Boundary Components

Reference ASME Code Section/Article	*Code Requirement*	*Alternatives, Justification and Compensatory Measures*
NB-6111	All completed pressure retaining systems shall be pressure tested	*The pressure retaining system of the DSC consists of the following components: shell, bottom inner cover plate, siphon and vent block siphon and vent port covers, and top inner cover plates. The bottom cover plates are welded to the shell at the fabricator shop, whereas the top cover plates are field-welded to the shell at the nuclear power plant, following the loading of irradiated nuclear fuel. All other welds made to the pressure boundary, such as the support ring to shell weld, are not part of the pressure boundary and, thus, are not pressure tested.* DSC Shell and Bottom Cover Plate Welds: The DSC Shell and inner bottom cover plate are pressure tested during fabrication to the requirements of NB-6000. A helium leak test is performed to demonstrate leakage integrity of this boundary. Since the outer bottom cover plate is installed after the inner bottom cover plate is installed, it cannot be pressure tested. DSC Top Cover Plates Closure Welds: The top closure welds are not completed until the DSC is loaded with irradiated nuclear fuel; therefore, a pressure test is not performed. Multi-layer welds are used for these joints to eliminate potential leakage paths. *The inner and outer top closure welds are tested as follows:* *Inner Top Confinement Boundary Welds:* The inner top confinement boundary welds include the following: (1) field weld of inner cover plate to shell weld (including inner top cover plate to vent and siphon block), (2) top of siphon and vent block to shell weld, and (3) field weld of siphon and vent port cover plates to vent and siphon block ports. Weld (1) is helium leak tested in the field. Weld (2) is made in the fabricator shop under controlled conditions and receives a final PT. A pressure test and helium leak test are not practical because of its location. A field leak test of weld (2) is not performed because the current 10CFR72 license does not require it. Weld (3) is performed in the field with a final PT and without a leak test. A helium leak test cannot be performed on these welds because the vent and siphon ports are covered by the plates. Pressurization would require cutting a hole in the DSC creating a potential leakage point for the long-term storage canister. *Outer Top Cover Plate Weld:* The outer top cover plate to shell weld receives a root and final PT. It is not leak tested because it is installed following the inner top cover plate.

Table 4.8-1
ASME Code Alternatives for NUHOMS®-24P, 24PHB and 52B DSC Pressure Boundary Components

(continued)

Reference ASME Code Section/Article	*Code Requirement*	*Alternatives, Justification and Compensatory Measures*
NB-7000	*Overpressure Protection*	*No overpressure protection is provided for the NUHOMS® DSCs. The function of the DSC is to contain radioactive materials under normal, off-normal and hypothetical accident conditions postulated to occur during transportation and storage. The DSC is designed to withstand the maximum possible internal pressure considering 100% fuel rod failure at maximum accident temperature.*
NB -8000	*Requirements for nameplates, stamping & reports per NCA-8000*	*The NUHOMS® DSC nameplate provides the information required by 10CFR71, 49CFR173 and 10CFR72 as appropriate. Code stamping is not required for the DSC. QA data packages are prepared in accordance with the requirements of TN's approved QA program.*

Table 4.8-2
ASME Code Alternatives for NUHOMS®-24P, 24PHB, and 52B DSC Basket Assembly

Reference ASME Code Section/Article	*Code Requirement*	*Alternatives, Justification and Compensatory Measures*
NCA	*All*	*Not compliant with NCA. Quality Assurance is provided according to 10 CFR 72 Subpart G in lieu of NCA-4000.*
NCA-1140	*Use of Code editions and addenda*	*Code edition and addenda other than those specified in Section 4.2.2 may be used for construction, but in no case earlier than 3 years before that specified in the Table.* *Materials produced and certified in accordance with ASME Section II material specification from Code Editions and Addenda other than those specified in Section 4.2.2 may be used, so long the materials meet all the requirements of Article 2000 of the applicable Subsection of the Section III Edition and Addenda used for construction.*
NF-2130	Material must be supplied by ASME approved material suppliers	All DSC Basket Assembly sub-components designated as ASME on the DSC drawings are obtained from TN approved suppliers with Certified Material Test Reports (CMTR's). The DSC basket subcomponents listed below have been designated as non-Code. • Guide Sleeves, Oversleeves, and extraction stops (PWR only) • Neutron Absorber Plates and misc. hardware, such as anti-rotation pin, screws and locknuts, (BWR Only) • Coating for Spacer Discs
NF-4121	Material Certification by Certificate Holder	Material traceability and certification are maintained in accordance with TN's NRC approved QA program
NF -8000	*Requirements for nameplates, stamping & reports per NCA-8000*	*The NUHOMS® DSC nameplate provides the information required by 10CFR71, 49CFR173 and 10CFR72 as appropriate. Code stamping is not required for the DSC. QA data packages are prepared in accordance with the requirements of TN's approved QA program.*
NF-5000	*NDE Personnel must be qualified to edition of SNT-TC-1A*	*Permit use of more recent edition of SNT-TC-1A.*

4. Disengage the lifting yoke from the cask lifting trunnions and remove the yoke from the fuel pool. Spray the lifting yoke with clean demineralized water as it is raised out of the fuel pool.

5. Move a candidate fuel assembly from a fuel rack in accordance with the plant's 10CFR50 fuel handling procedures.

6. Prior to insertion of a spent fuel assembly into the DSC, the identity of the assembly is to be verified by two individuals using an underwater video camera or other means. Read and record the fuel assembly identification number from the fuel assembly and check this identification number against the DSC loading plan which indicates which fuel assemblies are acceptable for dry storage.

7. Position the fuel assembly for insertion into the selected DSC storage cell and load the fuel assembly. Repeat Steps 5 through 7 for each SFA loaded into the DSC. After the DSC has been fully loaded, check and record the identity and location of each fuel assembly in the DSC.

8. After all the SFAs have been placed into the DSC and their identities verified, reconnect the yoke to the previously staged DSC shield plug/cable assemblies and re-verify shield plug is level. Position the lifting yoke and the top shield plug above the fuel pool and lower the shield plug onto the DSC.

   CAUTION: Verify that all the lifting height restrictions as a function of temperature specified in Technical Specification *5.3.1.A* can be met in the following steps which involve lifting of the transfer cask.

9. Visually verify that the top shield plug is properly seated onto the DSC.

10. Position the lifting yoke with the cask trunnions and verify that it is properly engaged.

11. Raise the transfer cask to the pool surface. Prior to raising the top of the cask above the water surface, stop vertical movement.

12. Inspect the top shield plug to verify that it is properly seated onto the DSC. If not, lower the cask and reposition the top shield plug. Repeat Steps 11 and 12 as necessary.

13. Continue to raise the cask from the pool and spray the exposed portion of the cask with demineralized water until the top region of the cask is accessible.

14. Drain any excess water from the top of the DSC shield plug back to the fuel pool.

15. Lift the cask from the fuel pool. As the cask is raised from the pool, continue to spray the cask with demineralized water.

16. Move the transfer cask with loaded DSC to the cask decon area.

17. Install TC seismic restraints if required by Technical Specification 4.3.3.7 (required only on plant-specific basis).

18. Verify that the transfer cask dose rates are compliant with limits specified in Technical Specification 5.2.4.

5.1.1.3 DSC Drying and Backfilling

1. Check the radiation levels along the perimeter of the cask. The cask exterior surface should be decontaminated as necessary in accordance with the limits specified in Technical Specification 5.2.4.d. Temporary shielding may be installed as necessary to minimize personnel exposure. Fill neutron shield if empty.

2. Place scaffolding around the cask so that any point on the surface of the cask is easily accessible to personnel.

3. Disengage the rigging cables from the top shield plug and remove the eyebolts. Disengage the lifting yoke from the trunnions and move it clear of the cask.

4. Decontaminate the exposed surfaces of the DSC shell perimeter and remove the inflatable cask/DSC annulus seal.

5. Connect the cask drain line to the cask, open the cask cavity drain port and allow water from the annulus to drain out until the water level is approximately twelve inches below the top edge of the DSC shell. Take swipes around the outer surface of the DSC shell and check for smearable contamination in accordance with the Technical Specification 5.2.4.d limits.

6. Install the automated welding machine onto the inner top cover plate and place the inner top cover plate with the automated welding machine onto the DSC. Verify proper fit-up of the inner top cover plate with the DSC shell.

7. Check radiation levels along surface of the inner top cover plate. Temporary shielding may be installed as necessary to minimize personnel exposure.

8. Connect the vacuum drying system (VDS) to the DSC and use the liquid pump to drain approximately 60 gallons from the DSC to the fuel pool. This will lower the water level about four inches below the bottom of the shield plug. *Provisions should be made to assure that air will not enter the DSC cavity. This may be achieved by replenishing the helium in the DSC cavity during cask movement from the fuel pool to the decon area in case of a malfunction of equipment used for cask movement.*

9. Disconnect the VDS from the DSC.

CAUTION: *A*n additional step is required to address Bulletin 96-04 concerns (5.5). This step provides for continuous hydrogen monitoring during the welding of the top inner cover plate as described in step 11 (5.4) *and for compliance with Technical Specification 5.2.6.* Insert a ¼ inch tygon tubing of sufficient length through the vent port such that it terminates just below the DSC shield plug. Connect the tygon tubing to a hydrogen monitor to allow continuous monitoring of the hydrogen atmosphere in the DSC cavity during welding of the inner cover plate. *Optionally, other methods may be used for continuous monitoring of the hydrogen atmosphere in the DSC cavity during welding of the inner top cover plate, to comply with the Technical Specification. E*nsure that the DSC internal pressure remains atmospheric during welding of the inner top closure plate.

10. Cover the cask/DSC annulus to prevent debris and weld splatter from entering the annulus.

11. Ready the automated welding machine and tack weld the inner top cover plate to the DSC shell. Complete the inner top cover plate weldment and remove the automated welding machine.

CAUTION: For DSCs with spacer discs coated with aluminum, continuously monitor the hydrogen concentration in the DSC cavity using the tygon tube arrangement described in step 9 during the inner top cover plate cutting/welding operations. Verify that the measured hydrogen concentration does not exceed a safety limit of 2.4% (5.4). If this limit is exceeded, stop all welding operations and purge the DSC cavity with 2-3 psig helium (or any other inert medium) via the ¼" tygon tubing to reduce the hydrogen concentration safely below the 2.4% limit. This step is optional for DSCs with spacer discs which have been coated with electroless nickel.

12. Perform dye penetrant weld examination of the inner top cover plate weld in accordance with the Technical Specification 5.2.4.b requirements.

13. Place the strongback so that it sits on the inner top cover plate and is oriented such that:

- the DSC siphon and vent ports are accessible
- the strongback stud holes line up with the TC lid bolt holes.

14. Lubricate the studs and, using a crossing pattern, adjust the strongback studs to snug tight ensuring approximately even pressure on the cover plate.

(a) The water fill rate must be regulated during this reflooding operation to ensure that the DSC vent pressure does not exceed 20.0 psig.

(b) To address Bulletin 96-04 concerns (5.5), *and for compliance with Technical Specification 5.2.6*, provide for continuous hydrogen monitoring of the DSC cavity atmosphere (Reference step 5.1.1.3.9) during all subsequent cutting operations to ensure that a safety limit of 2.4% hydrogen concentration is not exceeded (5.4). Purge with 2-3 psig helium (or any other inert medium) as necessary to maintain the hydrogen concentration safely below this limit.

19. Place welding blankets around the cask and scaffolding.

20. Using plasma arc-gouging, a mechanical cutting system or other suitable means, remove the seal weld from the outer top cover plate and DSC shell. A fire watch should be placed on the scaffolding with the welder, as appropriate. The exhaust system should be operating at all times.

21. The material or waste from the cutting or grinding process should be treated and handled in accordance with the plant's low level waste procedures unless determined otherwise.

22. Remove the top of the tent, if necessary.

23. Remove the exhaust hood, if necessary.

24. Remove the DSC outer top cover plate.

25. Reinstall tent and temporary shielding, as required. Remove the seal weld from the inner top cover plate to the DSC shell in the same manner as the top cover plate. Remove the inner top cover plate. Remove any remaining excess material on the inside shell surface by grinding.

26. Clean the cask surface of dirt and any debris which may be on the cask surface as a result of the weld removal operation. Any other procedures which are required for the operation of the cask should take place at this point as necessary.

27. Engage the yoke onto the trunnions, install eyebolts into the top shield plug and connect the rigging cables to the eyebolts.

28. Visually inspect the lifting hooks or the yoke to insure that they are properly positioned on the trunnions.

5.6 Analytical Sampling

The only analytical sampling used with the NUHOMS® system is the continuous monitoring (5.4) of the hydrogen concentration in the DSC cavity during welding of the DSC inner top cover plate.

10. OPERATING CONTROLS AND LIMITS

The information originally presented in SAR Chapter 10, Operating Controls and Limits, was moved to the Technical Specifications of NUHOMS® CoC 1004, including the Technical Specifications Bases. With Amendment 11 to CoC 1004, the Technical Specifications are being converted to the NUREG-1745 format. Therefore the Bases are being returned to this chapter. The Bases follow Tables 10-1 and 10-2, which are discussed below.

Original SAR Chapter 10 requirements are currently referenced in various TN documents. Table 10-1 provides a cross-reference index of the original Technical Specifications against the corresponding sections in the original SAR Chapter 10 requirements.

A cross-reference table showing the relationship between the Amendment 10 Technical Specification sections and their corresponding Amendment 11 Technical Specifications is provided as Table 10-2. Certain CoC conditions and NRC commitments are also discussed in Table 10-2.

Table 10-2 also includes the current location of the Bases statements from the Amendment 10 Technical Specifications.

Table 10-1
Index of CoC Requirements v/s Historical SAR References

CoC Section No.[1]	Title of CoC Requirements	Historical **SAR** Reference
1.2	**Technical Specifications, Functional and Operating Limits**	**10.3**
1.2.1	Fuel Specification	10.3.1
1.2.2	DSC Vacuum Pressure During Drying	10.3.2
1.2.3	DSC Helium Backfill Pressure	10.3.3
1.2.4	DSC Helium Leak Rate of Inner Seal Weld	10.3.4
1.2.5	DSC Dye Penetrant Test of Closure Welds	10.3.5
1.2.6	Deleted	10.3.6
1.2.7	HSM Dose Rates	10.3.7
1.2.8	HSM Maximum Air Exit Temperature	10.3.8
1.2.9	Transfer Cask Alignment with HSM	10.3.9
1.2.10	DSC Handling Height Outside the Spent Fuel Pool Building	10.3.10
1.2.11	Transfer Cask Dose Rates	10.3.11
1.2.12	Maximum DSC Removable Surface Contamination	10.3.12
1.2.13	TC/DSC Lifting Heights as a Function of Low Temperature and Location	10.3.13
1.2.14	TC/DSC Transfer Operations at High Ambient Temperatures	10.3.14
1.2.15	Boron Concentration in the DSC Cavity Water (24-P Design Only)	10.3.15
1.2.16	Provision of TC Seismic Restraint Inside the Spent Fuel Building as a function of Horizontal Acceleration and Loaded Cask Weight	10.3.16
Table 1-1a	PWR Fuel Specifications of Fuel to be Stored in the Standardized NUHOMS®-24P DSC	Table 10.3-1
Table 1-1b	BWR Fuel Specifications of Fuel to be Stored in the Standardized NUHOMS®-52B DSC	Table 10.3-2
Figure 1.1	PWR Fuel Criticality Acceptance Curve	Figure 10.3.1
1.3	**Surveillance and Monitoring**	**10.4**
1.3.1	Visual Inspection of HSM Air Inlets and Outlets (Front Wall and Roof Birdscreen)	10.4.1
1.3.2	HSM Thermal Performance	10.4.2
Table 1.3.1	Summary of Surveillance and Monitoring Requirements	Table 10.4-1

Note 1 – These section numbers reflect the CoC prior to Amendment *11*; Table 10-2 below provides a cross reference to the current section numbers.

Table 10-2
Technical Specification Cross Reference Table between Amendment 10 and Amendment 11

Amendment 10 Tech Spec	Amendment 11 Tech Spec	*Location of Amendment 10 Bases*
1.1.1 Reg. Requirement of General License, Site Parameters	4.3.2 and 4.3.3 Site Specific Parameters and Analyses	*N/A*
1.1.2 Operating Procedures	5.1 Procedures	*N/A*
1.1.4 Quality Assurance	Part of CoC	*N/A*
1.1.5 Heavy Loads	Part of CoC	*N/A*
1.1.5 Training Module	5.2.2 Training Program	*N/A*
1.1.6 Pre-*Operational* Testing and Training Exercise	Part of CoC	*N/A*
1.1.7 Special Requirements for First System in Place	Not in STS	*N/A*
1.1.8 Surveillance Requirement Applicability	3.0 Limiting Condition for Operation (LCO) and Surveillance Requirements (SR) Applicability	*N/A*
1.1.9 Supplement Shielding	4.3.3 Site Specific Parameters and Analyses	*N/A*
1.1.10 HSM-H Storage Configuration	4.3.1 Storage Configuration	*N/A*
1.1.11 Hydrogen Gas Monitoring for 61BTH and 32PTH1 DSCs	*5.2.6 Hydrogen Gas Monitoring for 24P, 52B, 24PHB, 61BT, 32PT, 24PTH, 61BTH and 32PTH1 DSCs*	*N/A*
1.1.12 Codes and Standards	*4.2 Codes and Standards*	*N/A*
1.2.1 Fuel Specifications	*2.1 Fuel to be stored in the standardized NUHOMS® System and 4.3 – Canister Criticality control*	*B 10.2*
1.2.2 DSC Vacuum Pressure During Drying	3.1.1 DSC Bulk Water Removal Medium and Vacuum Drying Pressure	*B 10.3.1.1*
1.2.3, 1.2.3a DSC Helium Backfill Pressure for Various DSCs	3.1.2 DSC Helium Backfill Pressure for various DSCs	*B 10.3.1.2*
1.2.4, 1.2.4a DSC Helium Leak Rate of Inner Seal Weld for Various DSCs	5.2.4c Leak Test	*B 10.5.2.4c*
1.2.5 DSC Dye Penetrant Test of Closure Welds	5.2.4b DSC Dye Penetrant Test of Closure Welds	*B 10.5.2.4b*
1.2.6 Deleted	N/A	*N/A*
1.2.7, 1.2.7a, 1.2.7b, 1.2.7c, 1.2.7d, 1.2.7e, 1.2.7f, 1.2.7g HSM Dose Rates Loaded with Various DSC's	5.4.1 and 5.4.2 Dose Rate Limits for HSM with various DSCs	*B 10.5.4*
1.2.8, 1.2.8a, 1.2.8b, 1.2.8c HSM Maximum Exit Air Temperature with Various Loaded DSC's	3.1.4 HSM Maximum Air Exit Temperature with Various Loaded DSCs	*B 10.3.1.4*
1.2.9 Transfer Cask Alignment with HSM or HSM-H	5.3.3 Transfer Cask Alignment with HSM or HSM-H	*B 10.5.3.3*
1.2.10, 1.2.13, 1.2.14 and 1.2.14a TC/DSC Lifting Heights and Ambient Temperatures for Various DSCs	5.3.1 A and 5.3.1 B TC/DSC Lifting / Handling Height Limits	*B 10.5.3.1*
1.2.11, 1.2.11a through e TC Dose Rates Loaded with Various DSCs	*5.2.4e Transfer Cask Dose Rates*	*B 10.5.2.4e*
1.2.12 Maximum DSC Removable Surface Contamination	5.2.4d Maximum DSC Removable Surface Contamination	*B 10.5.2.4d*

Table 10-2
Technical Specification
Cross Reference Table between Amendment 10 and Amendment 11
(concluded)

Amendment 10 Tech Spec	Amendment 11 Tech Spec	*Location of Amendment 10 Bases*
1.2.13 See line above for 1.2.10, which includes 1.2.13	—	—
1.2.14 See line above for 1.2.10, which includes 1.2.14 and 14a	—	—
1.2.15, 1.2.15a, 1.2.15b, 1.2.15c, 1.2.15d Boron Concentration in the DSC Cavity Waters for Various DSCs	3.2.1 Boron Concentration of Spent Fuel Pool Water and Water Added to DSC Cavity for Various DSCs	*B 10.3.2*
1.2.16 Provisions of TC Seismic Restraint inside the Spent Fuel Pool Building	4.3.3 Site Specific Parameters and Analysis	*B 10.4.3.3.7*
1.2.17, 1.2.17a, 1.2.17b, 1.2.17c Vacuum Drying Duration Limits for Various DSCs	Deleted due to use of Helium	*N/A*
1.2.18, 1.2.18a, 1.2.18b Time Limit for Completion of 24PTH, 61BTH Type 2 or 32PTH1 DSC Transfer Operations	3.1.3 Time Limit for Completion of TRANSFER OPERATIONS (24PTH, 61BTH Type 2 or 32PTH1 DSC Only)	*B 10.3.1.3*
1.2.19 61BTH and 32PTH1 DSC Bulkwater Removal Medium	*3.1.1 DSC Bulkwater Removal Medium and Vacuum Drying Pressure*	*B 10.3.1.1*
1.3.1 Visual Inspection of HSM Air Inlets and Outlets (front wall and roof birdscreens)	5.2.5a Daily visual inspection of HSM Air Inlets and Outlets (front wall and roof birdscreens)	*B 10.5.2.5*
1.3.2 HSM Thermal Performance	5.2.5b Daily HSM Temperature Measurements	*B 10.5.2.5*
From CoC condition 7, concrete testing for HSM-H	5.5 Concrete testing for HSM-H	*N/A*
From CoC condition 8, HSM-H configuration changes	5.6 HSM-H configuration changes	*N/A*
TN's commitment to NRC in 1/25/07 meeting: OS197L (75 ton version) cask shall not be used for plants with 100 ton crane capacity	Included in new Section 4.4.1	*N/A*
NRC Request: supplement shielding shall be used with OS197L (75 ton version) cask	Included in new Section 4.4.2	*N/A*
NRC Request: modify TN's proposed wording on "Contingency Planning" for abnormal events, eliminate terms contingency planning, abnormal events, high dose rates	Added to Section 5.2.4 "Radiation Protection Program"	*N/A*
NRC Request: include a requirement for user to perform dose assessment ahead of time and augment Part 20 program and address recovery from a potential malfunction of a remote handling device	Added to Section 5.2.4 "Radiation Protection Program" and also modified Appendix W.10 Occupational Exposure Section to include exposure due to recovery operations from a potential malfunction of a remote handling device (Crane failure)	*N/A*
NRC Request: include the requirement of dose assessment for cases when Transfer cask requires use of remote operations.	Added to Section 5.2.4 "Radiation Protection Program"	*N/A*

B 10.2 FUNCTIONAL AND OPERATING LIMITS

Note: The Limiting Conditions for Operation (LCOs), Actions, Surveillance Requirements (SRs), etc. discussed herein are found in the NUHOMS® COC 1004 Technical Specifications.

BASES

BACKGROUND

The Standardized NUHOMS® DSC design (Models 24P, 52B, 61BT, 32PT, 24PHB, 24PTH, 61BTH and 32PTH1) requires certain limits on the spent fuel parameters, including fuel type, maximum allowable enrichment prior to irradiation, maximum burnup, minimum acceptable cooling time prior to storage in the NUHOMS® System, and physical condition of the spent fuel (i.e., intact or damaged fuel assemblies). Other important limitations are the radiological source terms from Control Components associated with the fuel assemblies to be stored. These limitations are included in the thermal, structural, radiological, and criticality evaluations performed for these DSC designs.

APPLICABLE SAFETY ANALYSIS

Various analyses have been performed that use these fuel parameters as assumptions. These assumptions are included in the thermal, criticality, structural, shielding and confinement analyses provided in the referenced FSAR Chapters below *and as discussed further here.*

The specification is based on consideration of the design basis parameters included in the FSAR and limitations imposed as a result of the staff review. Such parameters stem from the type of fuel analyzed, structural limitations, criteria for criticality safety, criteria for heat removal, and criteria for radiological protection. The standardized NUHOMS® system is designed for dry, horizontal storage of irradiated light water reactor (LWR) fuel. The principal design parameters of the fuel to be stored can accommodate standard PWR fuel designs manufactured by Babcock and Wilcox (B&W), Combustion Engineering (CE), and Westinghouse (WE), and standard BWR fuel manufactured by General Electric (GE), Exxon/ANF, and Framatome ANP. The NUHOMS®-24P and 52B systems are limited for use to these standard designs and to reload designs by other manufacturers as listed in Chapter 3 of the FSAR. The analyses presented in the FSAR are based on non-consolidated, zircaloy-clad fuel with no known or suspected gross breaches.

The NUHOMS®-61BT, 32PT, 24PHB, 24PTH, 61BTH, and 32PTH1 systems are limited for use to these standard designs and to reload designs by other manufacturers as listed in Tables 1-1d, 1-1f, 1-1i, 1-1j, 1-1m, 1-1u and 1-1bb. The corresponding analyses for these systems are presented in Appendix K, M, N, P, T, and U respectively of the FSAR.

The physical parameters that define the mechanical and structural design of the HSM and DSC are the fuel assembly dimensions and weight. The calculated stresses given in the FSAR are based on the physical parameters given in Tables 1-1a, 1-1b, 1-1c, 1-1d, 1-1e, 1-1f, 1-1g, 1-1i, 1-1j, 1-1l, 1-1m, 1-1t, 1-1u, 1-1aa and 1-1bb, which represent the upper bound.

The design basis fuel assemblies for nuclear criticality safety are Babcock and Wilcox 15x15 fuel assemblies for the NUHOMS®-24P and 24PHB, General Electric 7x7 fuel assemblies for the NUHOMS®-52B and General Electric 10x10 fuel assemblies for the NUHOMS®-61BT and 61BTH designs. The nuclear criticality safety for the NUHOMS®-32PT, NUHOMS®-24PTH and NUHOMS® 32PTH1 designs is based on an evaluation of individual fuel assembly class as listed in Table 1-1e, Table 1-1l and Table 1-1aa, respectively.

The NUHOMS®-24P Long Cavity DSC is designed for use with standard Burnable Poison Rod Assembly (BPRA) designs for the B&W 15x15 and Westinghouse 17x17 fuel types as listed in Appendix J of the FSAR. The NUHOMS®-24PHB Long Cavity DSC is designed for use with standard BPRA designs for the B&W 15x15 fuel types listed in Appendix N of the FSAR.

The design basis PWR BPRA for shielding source terms and thermal decay heat load is the Westinghouse 17x17 Pyrex Burnable Absorber, while the DSC internal pressure analysis is limited by B&W 15x15 BPRAs. In addition, BPRAs with cladding failures were determined to be acceptable for loading into NUHOMS®-24P Long Cavity DSC as evaluated in Appendix J of the FSAR. The acceptability of loading BPRAs, including damaged BPRAs into the long cavity versions of the 32PT and 24PTH DSC configurations is provided in Appendix M and Appendix P respectively of the FSAR.

Control Components (CCs), as listed in Table 1-1e, Table 1-1l and Table 1-1aa are authorized for storage in the NUHOMS®-32PT DSC, NUHOMS®-24PTH DSC and NUHOMS®-32PTH1 DSCs, respectively. For these DSCs, BPRAs are considered as being representative of all CCs, unless specifically excluded. The acceptability of loading CCs into the NUHOMS®-32PT, NUHOMS®-24PTH and NUHOMS®-32PTH1 DSCs is provided in Appendix M, P and U of the FSAR, respectively.

The NUHOMS®-24P is designed for unirradiated fuel with an initial fuel enrichment of up to 4.0 wt. % U-235, taking credit for soluble boron in the DSC cavity water during loading operations. Section 1.2.15 defines the requirements for boron concentration in the DSC cavity water for the NUHOMS®-24P design only. In addition, the fuel assemblies qualified for storage in NUHOMS®-24P DSC have an equivalent unirradiated enrichment of less than or equal to 1.45 wt. % U-235. Figure 1-1 defines the required burnup as a function of initial enrichment. The NUHOMS®-52B is designed for unirradiated fuel with an initial enrichment of less than or equal to 4.0 wt. % U-235.

The NUHOMS®-61BT has three basket configurations, based on the boron content in the poison plates as listed in Table 1-1k. The maximum lattice average enrichment

authorized for Type A, B and C NUHOMS®-61BT DSC is 3.7, 4.1 and 4.4 wt. % U-235 respectively.

The NUHOMS®-61BTH DSC is designed for unirradiated fuel with a maximum lattice average enrichment of 5.0 wt. % U-235 as shown in Table 1-1t, taking credit for the boron content in the poison plates of the DSC basket, as shown in Table 1-1v for intact fuel and Table 1-1w for damaged fuel. The NUHOMS®-61BTH DSC (similar to 61BT DSC) is designated as Type 1 and Type 2 depending upon the rails used in the basket.

Each 61BTH DSC type is provided with six alternate basket configurations, based on the boron content in the poison plates, as listed in Table 1-1v or Table 1-1w (designated as "A" for the lowest B10 loading to "F" for the highest B10 loading). Three alternate poison materials are allowed: (a) Borated Aluminum alloy, or (b) a Boron Carbide/Aluminum Metal Matrix Composite (MMC), or (c) Boral®.

For the 61BTH DSC, Borated Aluminum, MMC, or Boral® shall be supplied in accordance with UFSAR Sections T.9.1.7.1, T.9.1.7.2, T.9.1.7.3, T.9.1.7.5, T.9.1.7.6.5, and T.9.1.7.7.3, with the minimum B10 areal density specified in Table 1-1v or Table 1-1w. These sections of the FSAR are hereby incorporated into the NUHOMS® 1004 CoC.

The NUHOMS®-32PT is designed for unirradiated fuel with an initial fuel enrichment of up to 5.0 wt. % U-235 as shown in Table 1-1g, taking credit for Poison Rod Assemblies (PRAs), poison plates, and soluble boron in the DSC cavity water during loading operations. The required PRA locations are per Figures 1-5, or 1-6 or 1-7. A 32PT DSC basket may contain 0, 4, 8 or 16 PRAs and is designated a Type A, Type B, Type C or Type D basket, respectively. Each basket type is designed with up to three alternate configurations depending on the configuration of poison plates provided (16, 20 or 24) as shown in Table 1-1g. Table 1-1h specifies the minimum B10 content for poison plates. Specification 1.2.15a defines the requirements for boron concentration in the DSC cavity water for the NUHOMS®-32PT design only.

The NUHOMS®-24PHB is designed for unirradiated fuel with an assembly average initial enrichment of less than or equal to 4.5 wt. % U-235 as shown in Table 1-1i, taking credit for soluble boron in the DSC cavity water during loading operations. Specification 1.2.15b defines the requirements for boron concentration in the DSC cavity water for the NUHOMS®-24PHB design only.

The NUHOMS®-24PTH is designed for unirradiated fuel with an assembly average initial enrichment of less than or equal to 5.0 wt. % U-235, as shown in Table 1-1l, taking credit for soluble boron in the DSC cavity water during loading operations and the boron content in the poison plates of the DSC basket, as shown in Table 1-1p for intact fuel and Table 1-1q for damaged fuel. The 24PTH DSC basket is designated as Type 1, if it is provided with aluminum inserts and Type 2 if it does not contain the aluminum inserts. Each basket type is designed with three alternate configurations, based on the boron content in the poison plates, as listed in Table 1-1r. The specification for the Metal Matrix Composite (MMC) for the 24PTH poison plates is provided in Table 1-1s. Specification 1.2.15c defines the requirements for boron concentration in the

DSC cavity water as a function of the DSC basket type for the various fuel classes authorized for storage in the 24PTH DSC for the NUHOMS®-24PTH design only.

The NUHOMS®-32PTH1 is designed for unirradiated fuel with an assembly average initial enrichment of less than or equal to 5.0 wt. % U-235, as shown in Table 1-1aa, taking credit for soluble boron in the DSC cavity water during loading operations and the boron content in the poison plates of the DSC basket, as shown in Table 1-1cc for intact fuel and Table 1-1dd for damaged fuel. The 32PTH1 DSC basket is designated as Type 1 or Type 2, depending upon the rails used in the basket. Each basket type is designed with five alternate configurations, based on the boron content in the poison plates, as listed in Table 1-1ff. Specification 1.2.15d defines the requirements for boron concentration in the DSC cavity water as a function of the DSC basket type for the various fuel classes authorized for storage in the 32PTH1 DSC for the NUHOMS®-32PTH1 design only.

For the 32PTH1 DSC, Borated Aluminum, MMC, or Boral® shall be supplied in accordance with UFSAR Sections U.9.1.7.1, U.9.1.7.2, U.9.1.7.3, U.9.1.7.5, U.9.1.7.6.5, and U.9.1.7.7.3, with the minimum B10 areal density specified in Table 1-1ff. These sections of the FSAR are hereby incorporated into the NUHOMS® 1004 CoC.

The thermal design criterion of the fuel to be stored is that the total maximum heat generation rate per assembly and BPRA or Control Components be such that the fuel cladding temperature is maintained within established limits during normal and off-normal conditions. For the NUHOMS®-24P, 52B and 61BT systems, fuel cladding temperature limits were established based on methodology in PNL-6189 and PNL-4835. For the NUHOMS®-32PT, 24PHB and 24PTH systems, fuel cladding limits are based on ISG-11, Rev. 2 (Reference 3). For the NUHOMS®-61BTH system, NUHOMS®-61BT system with Framatome-ANP 9x9 Version 9x9-2 (FANP9 9x9-2) fuel assemblies, and the NUHOMS®-32PTH1 system, fuel cladding limits are based on ISG-11, Rev. 3 (Reference 4).

The radiological design criterion is that fuel stored in the NUHOMS® system must not increase the average calculated HSM or transfer cask dose rates beyond those calculated for the 24P, 24PHB, 52B, 61BT, or 32PT canister full of design basis fuel assemblies with or without BPRAs.

Technical Specification Table 1-1a, Table 1-1b, Table 1-1c, Table 1-1j, Table 1-1e, Table 1-1i, Table 1-1l, Table 1-1t and Table 1-1aa provide the key fuel parameters that require confirmation prior to loading fuel assemblies within a specific Standardized DSC Model. Each of these Technical Specification Tables lists additional Technical Specification Tables and Figures which provide requirements which also must be met prior to loading.

BASES

LCOs	LCO 3.0.1, 3.0.2, 3.0.4 and 3.0.5 establish the general requirements applicable to all Specifications and apply at all times, unless otherwise stated.
LCO 3.0.1	LCO 3.0.2 establishes the Applicability statement within each individual Specification as the requirement for when the LCO is required to be met (i.e., when the canister is in the specified conditions of the Applicability statement of each Specification).

LCO 3.0.2

LCO 3.0.2 establishes that upon discovery of a failure to meet an LCO, the associated ACTIONS shall be met. The Completion Time of each Required Action for an ACTIONS Condition is applicable from the point in time that an ACTIONS Condition is entered. The Required Actions establish those remedial measures that must be taken within specified Completion Times when the requirements of an LCO are not met. This Specification establishes that:

a. Completion of the Required Actions within the specified Completion Times constitutes compliance with a Specification; and

b. Completion of the Required Actions is not required when an LCO is met within the specified Completion Time, unless otherwise specified.

There are two basic types of Required Actions. The first type of Required Action specifies a time limit in which the LCO must be met. This time limit is the Completion Time to restore a system or component or to restore variables to within specified limits. If this type of Required Action is not completed within the specified Completion Time, the canister may have to be placed in the spent fuel pool and unloaded. (Whether stated as a Required Action or not, correction of the entered Condition is an action that may always be considered upon entering ACTIONS.) The second type of Required Action specifies the remedial measures that permit continued operation of the unit that is not further restricted by the Completion Time. In this case, compliance

with the Required Actions provides an acceptable level of safety for continued operation.

Completing the Required Actions is not required when an LCO is met or is no longer applicable, unless otherwise stated in the individual Specifications.

The Completion Times of the Required Actions are also applicable when a system or component is removed from service intentionally. The reasons for intentionally relying on the ACTIONS include, but are not limited to, performance of Surveillances, preventive maintenance, corrective maintenance, or investigation of operational problems. Entering ACTIONS for these reasons must be done in a manner that does not compromise safety. Intentional entry into ACTIONS should not be made for operational convenience.

Individual Specifications may specify a time limit for performing an SR when equipment is removed from service or bypassed for testing. In this case, the Completion Times of the Required Actions are applicable when this time limit expires if the equipment remains removed from service or bypassed.

When a change in specified condition is required to comply with Required Actions, the equipment may enter a specified condition in which another Specification becomes applicable. In this case, the Completion Times of the associated Required Actions would apply from the point in time that the new Specification becomes applicable and the ACTIONS Condition(s) are entered.

LCO 3.0.3

This specification is not applicable to the Standardized NUHOMS® System. The placeholder is retained for consistency with the power reactor technical specifications.

LCO 3.0.4

LCO 3.0.4 establishes limitations on changes in specified conditions in the Applicability when an LCO is not met. It precludes placing the Standardized NUHOMS® System in a specified condition stated in that Applicability (e.g., Applicability desired to be entered) when the following exist:

a. Conditions are such that the requirements of the LCO would not be met in the Applicability desired to be entered; and

b. Continued noncompliance with the LCO requirements, if the Applicability were entered, would result in the equipment being required to exit the Applicability desired to be entered to comply with the Required Actions.

Compliance with Required Actions that permit continued operation of the equipment for an unlimited period of time in specified condition provides an acceptable level of safety for continued operation. Therefore, in such cases, entry into a specified condition in the Applicability may be made in accordance with the provisions of the Required Actions. The provisions of this Specification should not be interpreted as endorsing the failure to exercise the good practice of restoring systems or components before entering an associated specified condition in the Applicability.

The provisions of LCO 3.0.4 shall not prevent changes in specified conditions in the Applicability that are required to comply with ACTIONS. In addition, the provisions of LCO 3.0.4 shall not prevent changes in specified conditions in the Applicability that are related to the unloading of a canister.

Exceptions to LCO 3.0.4 are stated in the individual Specifications. Exceptions may apply to all the ACTIONS or to a specific Required Action of a Specification.

Surveillances do not have to be performed on the associated equipment out of service (or on variables outside the specified limits), as permitted by SR 3.0.1. Therefore, changing specified conditions while in an ACTIONS Condition, either in compliance with LCO 3.0.4 or where an exception to LCO 3.0.4 is stated, is not a violation of SR 3.0.1 or SR 3.0.4 for those Surveillances that do not have to be performed due to the associated out of service equipment.

LCO 3.0.5 This specification is not applicable to the Standardized NUHOMS® System. The placeholder is retained for consistency with the power reactor technical specifications.

BASES

SRs

SR 3.0.1 through SR 3.0.4 establish the general requirements applicable to all Specifications in Sections 3.1, 3.2, 3.3, and 3.4 of the Technical Specification and apply at all times, unless otherwise stated.

SR 3.0.1

SR 3.0.1 establishes the requirement that SRs must be met during the specified conditions in the Applicability for which the requirements of the LCO apply, unless otherwise specified in the individual SRs. This Specification is to ensure that Surveillances are performed to verify systems and components, and that variables are within specified limits. Failure to meet Surveillance within the specified Frequency, in accordance with SR 3.0.2, constitutes a failure to meet an LCO.

Systems and components are assumed to meet the LCO when the associated SRs have been met. Nothing in this Specification, however, is to be construed as implying that systems or components meet the associated LCO when:

a. The systems or components are known to not meet the LCO, although still meeting the SRs; or

b. The requirements of the Surveillance(s) are known to be not met between required Surveillance performances.

Surveillances do not have to be performed when the equipment is in a specified condition for which the requirements of the associated LCO are not applicable, unless otherwise specified.

Surveillances, including Surveillances invoked by Required Actions, do not have to be performed on equipment that has been determined to not meet the LCO because the ACTIONS define the remedial measures that apply. Surveillances have to be met and performed in accordance with SR 3.0.2, prior to returning equipment to service.

Upon completion of maintenance, appropriate post maintenance testing is required to declare equipment within its LCO. This includes ensuring applicable Surveillances are not failed and their most recent performance is in accordance with SR 3.0.2. Post maintenance testing may not be possible in the current specified conditions in the

Applicability due to the necessary equipment parameters not having been established. In these situations, the equipment may be considered to meet the LCO provided testing has been satisfactorily completed to the extent possible and the equipment is not otherwise believed to be incapable of performing its function.

This will allow operation to proceed to a specified condition where other necessary post maintenance tests can be completed.

SR 3.0.2

SR 3.0.2 establishes the requirements for meeting the specified Frequency for Surveillances and any Required Action with a Completion Time that requires the periodic performance of the Required Action on a "once per..." interval.

SR 3.0.2 permits a 25% extension of the interval specified in the Frequency. This extension facilitates Surveillance scheduling and considers plant operating conditions that may not be suitable for conducting the Surveillance (e.g., transient conditions or other ongoing Surveillance or maintenance activities).

The 25% extension does not significantly degrade the reliability that results from performing the Surveillance at its specified Frequency. This is based on the recognition that the most probable result of any particular Surveillance being performed is the verification of conformance with the SRs. The exceptions to SR 3.0.2 are those Surveillances for which the 25% extension of the interval specified in the Frequency does not apply. These exceptions are stated in the individual Specifications. The requirements of regulations take precedence over the TS. Therefore, when a test interval is specified in the regulations, the test interval cannot be extended by the TS, and the SR includes a Note in the Frequency stating, "SR 3.0.2 is not applicable".

As stated in SR 3.0.2, the 25% extension also does not apply to the initial portion of a periodic Completion Time that requires performance on a "once per..." basis. The 25% extension applies to each performance after the initial performance. The initial performance of the Required Action, whether it is a particular Surveillance or some other remedial action, is considered a single action with a single Completion Time. One reason for not allowing the 25% extension to this Completion Time is that such an action usually verifies that no loss of function has occurred by checking the status of redundant or diverse components or accomplishes the function of the equipment in an alternative manner.

The provisions of SR 3.0.2 are not intended to be used repeatedly merely as an operational convenience to extend Surveillance intervals (other than those consistent with refueling intervals) or periodic Completion Time intervals beyond those specified.

SR 3.0.3

SR 3.0.3 establishes the flexibility to defer declaring affected equipment as not meeting the LCO or an affected variable outside the specified limits when a Surveillance has not been completed within the specified Frequency. A delay period of up to 24 hours or up to the limit of the specified Frequency, whichever is less, applies from the point in time that it is discovered that the Surveillance has not been performed in accordance with SR 3.0.2, and not at the time that the specified Frequency was not met.

This delay period provides adequate time to complete Surveillances that have been missed. This delay period permits the completion of a surveillance before complying with Required Actions or other remedial measures that might preclude completion of the Surveillance. The basis for this delay period includes consideration of unit conditions, adequate planning, availability of personnel, the time required to perform the Surveillance, the safety significance of the delay in completing the required Surveillance, and the recognition that the most probable result of any particular Surveillance being performed is the verification of conformance with the requirements.

When a Surveillance with a Frequency based not on time intervals, but upon specified unit conditions or operational situations, is discovered not to have been performed when specified, SR 3.0.3 allows the full delay period of 24 hours to perform the Surveillance.

SR 3.0.3 also provides a time limit for completion of Surveillances that become applicable as a consequence of changes in the specified conditions in the Applicability imposed by Required Actions.

Failure to comply with specified Frequencies for SRs is expected to be an infrequent occurrence. Use of the delay period established by SR 3.0.3 is a flexibility which is not intended to be used as an operational convenience to extend Surveillance intervals.

If a Surveillance is not completed within the allowed delay period, then the equipment is considered not in service or the variable is considered outside the specified limits and the Completion Times of the Required Actions for the applicable LCO Conditions begin immediately upon expiration of the delay period. If a Surveillance is failed within the delay period, then the equipment is not in service, or the variable is

outside the specified limits and the Completion Times of the Required Actions for the applicable LCO Conditions begin immediately upon the failure of the Surveillance. Completion of the Surveillance within the delay period allowed by this Specification, or within the Completion Time of the ACTIONS, restores compliance with SR 3.0.1.

SR 3.0.4

SR 3.0.4 establishes the requirement that all applicable SRs must be met before entry into a specified condition in the Applicability.

This Specification ensures that system and component requirements and variable limits are met before entry in the Applicability for which these systems and components ensure safe operation of the facility.

The provisions of this Specification should not be interpreted as endorsing the failure to exercise the good practice of restoring systems or components to an appropriate status before entering an associated specified condition in the Applicability. However, in certain circumstances, failing to meet an SR will not result in SR 3.0.4 restricting a change in specified condition. When a system, subsystem, division, component, device, or variable is outside its specified limits, the associated SR(s) are not required to be performed, per SR 3.0.1, which states that Surveillances do not have to be performed on such equipment. When equipment does not meet the LCO, SR 3.0.4 does not apply to the associated SR(s) since the requirement for the SR(s) to be performed is removed. Therefore, failing to perform the Surveillance(s) within the specified Frequency does not result in an SR 3.0.4 restriction to changing specified conditions of the Applicability. However, since the LCO is not met in this instance, LCO 3.0.4 will govern any restrictions that may (or may not) apply to specified condition changes.

The provisions of SR 3.0.4 shall not prevent changes in specified conditions in the Applicability that are required to comply with ACTIONS. In addition, the provisions of SR 3.0.4 shall not prevent changes in specified conditions in the Applicability that are related to the unloading of a HSM-H or DSC.

The precise requirements for performance of SRs are specified such that exceptions to SR 3.0.4 are not necessary. The specific time frames and conditions necessary for meeting the SRs are specified in the Frequency, in the Surveillance, or both. This allows performance of Surveillances when the prerequisite condition(s) specified in a Surveillance procedure require entry into the specified condition in the Applicability of the associated LCO prior to the performance or completion of a Surveillance. A Surveillance that could not be

performed until after entering the LCO Applicability would have its Frequency specified such that it is not "due" until the specific conditions needed are met. Alternatively, the Surveillance may be stated in the form of a Note as not required (to be met or performed) until a particular event, condition, or time has been reached. Further discussion of the specific formats of SR annotation is found in Section 10.1.4, operation to proceed to a specified condition where other necessary post maintenance tests can be completed.

B 10.3.1 DSC FUEL INTEGRITY

B 10.3.1.1 DSC Bulkwater Removal Medium and Vacuum Drying Pressure

BASES

BACKGROUND

A DSC (all NUHOMS® Models) is placed in the spent fuel pool and loaded with fuel assemblies meeting the requirements of the Functional and Operating Limits. A shield plug is then placed on the DSC. Subsequent operations involve moving the DSC to the decontamination area and draining bulk water from the DSC using helium. After welding/NDE of the DSC inner top cover/top shield plug assembly, vacuum drying of the DSC is performed, and the DSC is backfilled with helium.

DSC vacuum drying is utilized to remove residual moisture from the cavity after the DSC has been drained of water. Any water which was not drained from the DSC evaporates from fuel or basket surfaces due to the vacuum. This vacuum drying operation is aided by the temperature increase due to the heat generation of the fuel.

APPLICABLE SAFETY ANALYSIS

The confinement of radioactivity during the storage of spent fuel in a DSC is ensured by the use of multiple confinement barriers and systems. The barriers relied upon are the fuel pellet matrix, the fuel cladding tubes in which the fuel pellets are contained, and the DSC in which the fuel assemblies are stored. Long-term integrity of the fuel cladding depends on storage in an inert atmosphere. This protective environment is accomplished by vacuum drying the DSC and backfilling it with helium. The removal of water is necessary to prevent phase change–related pressure increase upon heatup. No time limits apply for vacuum drying a DSC when helium is used as a blowdown medium. The FSAR analysis (see Referenced FSAR Chapters below) evaluates that for each of the DSC Models, the confinement boundary is not compromised due to any normal, off-normal or accident condition postulated and the fuel clad temperature remains below allowable values.

The potential exists for oxidation of fuel pellets if they are exposed to air for sufficient duration at high temperature. Use of helium for blowdown or draindown operations will help prevent oxidation of fuel pellets due to air by replacing air with helium which is an inert gas.

LCO

A stable vacuum pressure of $\leq$ 3 Torr further ensures that all liquid water has evaporated in the DSC cavity, and that the resulting inventory of oxidizing gases in the DSC is below 0.25 volume %.

APPLICABILITY

This is applicable to all DSC Models.

ACTIONS

The actions specified require restoring the vacuum drying system to an operable status or ensuring the integrity of the DSC/ITCP weld or the establishment of a helium pressure of at least *1.0* atmosphere within the DSC or flooding the DSC to submerge the fuel assemblies, within 30 days. The specified value of helium atmosphere allows the transfer of decay heat from the DSC while allowing implementation of corrective actions to return the DSC to an analyzed condition. The 15 psig limit in the Action section is conservatively below the maximum analyzed blowdown pressure. *The basis for 30 days is as follows: LCO 3.1.1 requires the use of helium for all water removal from the DSC before vacuum drying. Therefore, vacuum drying operations are carried out with water replaced by helium. The UFSAR thermal analysis demonstrates that if helium is used as a cover gas for water removal the conductivity of helium during vacuum drying operations assures that cladding temperatures remain below the cladding temperature limit. The DSC/TC annulus also contains water during the vacuum drying process. Because the cladding temperatures are below the cladding temperature limits, the criterion of 30 days is used as a reasonable time period for identifying and repairing vacuum drying system or seal welds.*

SURVEILLANCE REQUIREMENTS

Ensure that vacuum pressure remains sufficiently low for a sufficient timeframe, to ensure that the DSC is dry.

REFERENCES

DSC Model	Applicable FSAR References
24P and 52B	Chapter 8
61BT	Appendix K.3 and K.4
32PT	Appendix M.3 and M.4
24PHB	Appendix N.3 and N.4
24PTH	Appendix P.3 and P.4
61BTH	Appendix T.3 and T.4
32PTH1	Appendix U.3 and U.4

U.S. Nuclear Regulatory Commission (USNRC) Interim Staff Guidance (ISG) No. 11, Revision 3, "Cladding Considerations for the Transportation and Storage of Spent Fuel."

B 10.3.1 DSC FUEL INTEGRITY

B 10.3.1.2 DSC Helium Backfill Pressure

BASES

BACKGROUND

After welding/NDE of the DSC inner top cover/top shield plug assembly, vacuum drying of the DSC is performed, and the DSC is backfilled with helium. During normal storage conditions, the fuel assemblies are stored in the DSC with an inert helium atmosphere. Helium is a better conductor of heat than nitrogen or vacuum, and thus results in lower fuel clad temperatures. In addition, it provides an inert atmosphere during storage conditions. The inert helium environment protects the fuel from potential oxidizing environments. A helium purity of $\geq$ 99.99% is recommended for this application.

APPLICABLE SAFETY ANALYSIS

Long-term integrity of the fuel cladding depends on storage in an inert atmosphere. FSAR analysis (see Referenced FSAR Chapters below) evaluates the effect of accidents and short term temperature transients on fuel cladding integrity. Credit for the helium backfill pressure is taken to limit the potential for corrosion of the fuel cladding. FSAR thermal analysis evaluates the DSC maximum pressure under normal, off-normal, and accident conditions.

LCO

DSC backpressure is maintained within a range of pressure during initial backfill to ensure maintenance of the helium backfill pressure over time and will not result in excessive DSC pressure in normal, off-normal and accident conditions.

APPLICABILITY

This specification is applicable to all DSC Models.

ACTIONS

The actions required and associated completion times are associated with ensuring that the DSC remains in a safe condition and within its design pressure limits and time limits established in the FSAR. These limits are imposed to ensure that the DSC confinement integrity is maintained. *With a helium atmosphere in the DSC cavity, the UFSAR thermal analysis demonstrates that the cladding temperatures remain below the cladding temperature limit. Note that no credit is taken for any convection of helium in the DSC cavity. Because the cladding temperatures are below the cladding temperature limit, the criterion of 14 days is used as a reasonable time period for identifying and repairing vacuum drying system or seal welds.*

SURVEILLANCE REQUIREMENTS

The DSC backfill pressure is monitored during the initial DSC loading to ensure that (1) the atmosphere surrounding the irradiated fuel is a non-oxidizing inert helium gas and (2) filled to a pressure level that is consistent with the FSAR thermal analysis.

REFERENCES

DSC Model	Applicable FSAR References
24P and 52B	Chapter 8
61BT	Appendix K.3 and K.4
32PT	Appendix M.3 and M.4
24PHB	Appendix N.3 and N.4
24PTH	Appendix P.3 and P.4
61BTH	Appendix T.3 and T.4
32PTH1	Appendix U.3 and U.4

B 10.3.1 DSC FUEL INTEGRITY

B 10.3.1.3 Time Limit for Completion of Transfer Operations (24PTH, 61BTH Type 2 or 32PTH1 DSC Only).

BASES

BACKGROUND

After a high heat load DSC (NUHOMS®-24PTH-S 24PTH-L, 61BTH Type 2 or 32PTH1 DSC Only) has been loaded with fuel assemblies, vacuum dried and sealed, it is ready for transfer to the ISFSI. The design of a loaded NUHOMS® TC/DSC system provides sufficient passive heat rejection capacity to ensure that the integrity of the fuel cladding is maintained provided the specified time limits for completion of the transfer are met.

APPLICABLE SAFETY ANALYSIS

Long-term integrity of the fuel cladding depends on storage in an inert atmosphere and maintaining fuel cladding temperature below an acceptable limit. The TC/DSC transient thermal analysis provided in the FSAR (see Referenced FSAR Chapters below) evaluates the fuel cladding temperatures under normal, off-normal, and accident conditions during the transfer of a loaded TC/DSC.

LCO

The time to complete the transfer of a loaded TC/DSC is monitored to ensure that the fuel cladding does not exceed the ISG-11 limit of 752 degrees F during transfer.

APPLICABILITY

This specification is applicable to a loaded NUHOMS®-24PTH-S, 24PTH-L DSC or a 61BTH Type 2 DSC or a 32PTH1 DSC when transferred in an OS197FC, OS197FC-B or an OS200 TC as applicable.

This technical specification does not apply to the 24PHB DSC. The 24PHB DSC is only authorized for a maximum heat load of 24 kW/DSC. The thermal analysis performed for the 24PHB as documented in Appendix N.4 demonstrates that the steady state cladding temperatures during TRANSFER OPERATIONS are below the cladding temperature limit. Therefore, there is no time limit for completion of DSC transfer.

ACTIONS

The actions required and the specified completion time of 2 hours are associated with ensuring that the fuel cladding does not exceed 752 degrees F during transfer.

SURVEILLANCE REQUIREMENTS

The specified monitoring of the time duration for the completion of the transfer step ensures that the fuel cladding temperatures remain below the regulatory limit of 752 degrees F during this operation.

REFERENCES

DSC Model	Applicable FSAR References
24PTH	Appendix P.4
61BTH	Appendix T.4
32PTH1	Appendix U.4

B 10.3.1 DSC FUEL INTEGRITY

B 10.3.1.4 HSM Maximum Air Exit Temperature with a Loaded DSC.

BASES

BACKGROUND

Following initial DSC transfer to the HSM, air temperature increase between the HSM inlet vents and outlet vents is monitored until equilibrium conditions are achieved. For a DSC with a heat load less than the design basis, the methodology used in the FSAR is used to predict the temperature increase corresponding to a design basis DSC heat load.

APPLICABLE SAFETY ANALYSIS

Long-term integrity of the fuel cladding depends on storage in an inert atmosphere and maintaining fuel cladding temperature below an acceptable limit. The thermal analysis provided in the FSAR (see Referenced FSAR Chapters below) evaluates the maximum HSM air exit temperatures and HSM concrete temperatures with a design basis heat load DSC under normal, off-normal, and accident conditions.

LCO

The HSM air temperature rise is monitored to ensure that the temperatures of the fuel cladding and the HSM concrete do not exceed the values calculated in the FSAR thermal analysis for a given heat load.

APPLICABILITY

This specification is applicable to a HSM or a HSM-H following an initial transfer of a loaded DSC (24P, 52B, 61BT, 32PT, 24PHB, 24PTH, 61BTH or 32PTH1) into them or the occurrence of an accident condition.

ACTIONS

The actions required and the specified completion times are associated with checking HSM or HSM-H inlet and outlet vents for any blockages and for ensuring that the excessive temperature rise is not due to environmental factors. If the temperatures cannot be controlled to within acceptable limits, the cask must be unloaded within the time period as determined by the analysis to ensure that the fuel cladding does not exceed the regulatory limit during storage.

The air temperature rise of greater than the specified amount can occur if the inlet and/or outlet vents are blocked. The blocked vent analysis documented in various thermal analysis sections of the UFSAR for the various canisters show that concrete and fuel cladding temperatures are below the analyzed limits if the surveillance frequency of once per day (daily) is used to inspect for the blockage. Therefore, 24 hour completion time was selected for REQUIRED ACTION A.1.

A COMPLETION TIME for REQUIRED ACTIONS A.2 and B.1 of 30 days to perform the analysis is selected because with the vents open, there is significant margin to the accident condition temperature limits on the concrete and fuel cladding temperatures.

SURVEILLANCE REQUIREMENTS

The HSM or HSM-H air temperature rise is measured 24 hours after the DSC is inserted into the HSM or HSM-H and repeated every 24 hours until an equilibrium condition is achieved. The measured thermal performance of the cask is then compared against that predicted by the FSAR thermal analysis for the same heat load to ensure that the system is performing as designed.

REFERENCES

HSM	DSC Model	Applicable FSAR References
Standardized HSM	24P and 52B	Chapter 8
Standardized HSM	61BT	Appendix K.4
Standardized HSM	32PT	Appendix M.4
Standardized HSM	24PHB	Appendix N.4
Standardized HSM	24PTH-S-LC	Appendix P.4
HSM-H	24PTH-S-LC or 24PTH-S or 24PTH-L	Appendix P.4
Standardized HSM	61BTH Type 1	Appendix T.4
HSM-H	61BTH Type 1 or Type 2	Appendix T.4
HSM-H	32PTH1	Appendix U.4

B 10.3.2 CASK CRITICALITY CONTROL

BASES

BACKGROUND

During loading and unloading of a 24P, 32PT, 24PHB, 24PTH or 32PTH1 DSC, the DSC cavity is filled with borated water having a minimum boron concentration which is a function of the DSC basket type, fuel assembly class, maximum assembly average enrichment and the condition of fuel (Intact or Damaged). This specification ensures that a subcritical configuration is maintained in the event of an accidental loading of a DSC with unirradiated fuel.

APPLICABLE SAFETY ANALYSIS

The 24P, 32PT, 24PHB, 24PTH or 32PTH1 DSCs have been designed for unirradiated fuel with a specified maximum assembly average initial enrichment while taking credit for the soluble boron concentration in the DSC cavity water and the boron content in the neutron absorber plates. The criticality analysis provided in the FSAR (see Referenced FSAR Chapters below) evaluates the various DSCs to ensure that a subcritical configuration is maintained.

LCO

The minimum boron concentration limits of the water in the DSC cavity as specified in the LCO to ensure that a subcritical configuration is maintained in the event of an accidental loading of a DSC with unirradiated fuel.

APPLICABILITY

This specification is applicable to 24P, 32PT, 24PHB, 24PTH or a 32PTH1 DSC during loading and unloading operations.

ACTIONS

The actions required and the specified completion times for the required actions are associated with ensuring that either the dissolved boron concentration is restored above the specified minimum or the fuel is removed from the DSC.

SURVEILLANCE REQUIREMENTS

Performance of two separate independent analysis of the water used to fill the DSC cavity (a) within 4 hours of initiation of loading/unloading operations and (b) subsequent analysis at intervals not exceeding 48 hours until the conclusion of such loading/unloading operations provides assurance that a subcritical DSC configuration is always maintained.

REFERENCES

DSC Model	Applicable FSAR References
24P	Chapter 3
32PT	Appendix M.6
24PHB	Appendix N.6
24PTH	Appendix P.6
32PTH1	Appendix U.6

BASES

B 10.4.3.3-1 *The basis for this technical specification is Section 3.2.2, "Water Level (Flood) Design."*

B 10.4.3.3-2 *The basis for this technical specification is Section 3.2.4, "Snow and Ice Loads."*

B 10.4.3.3-3 *The bases for this technical specification are the decay heat removal related sections shown below, for the indicated DSC types:*

Section 1.2.2 – 24P	*Section N.4.4 – 24PHB*
Section 1.2.2 – 52B	*Section P.4.4 – 24PTH*
Section K.4.4 – 61BT	*Section T.4.4 – 61BTH*
Section M.4.4 – 32PT	*Section U.4.4 – 32PTH1*

B 10.4.3.3-4 *The bases for this technical specification are the decay heat removal related sections shown below, for the indicated DSC types:*

Section 1.2.2 – 24P	*Section N.4.5 – 24PHB*
Section 1.2.2 – 52B	*Section P.4.4 – 24PTH*
Section K.4.5 – 61BT	*Section T.4.4 – 61BTH*
Section M.4.5 – 32PT	*Section U.4.4 – 32PTH1*

B 10.4.3.3-5 *The basis for this technical specification is Section 3.3.6, "Fire and Explosion Protection."*

B 10.4.3.3-6 *The basis for this technical specification is Interim Staff Guidance 13, "Real Individual."*

B 10.4.3.3-7 *The basis for this technical specification is Section 8.2.3.2-D, "Transfer Cask Seismic Evaluation."*

B 10.4.3.3-8 *The bases for this technical specification are SAR Sections 3.2.3, "Seismic Design Criteria," P.2.2.3, "Seismic Design," T.2.2.3, "Seismic Design," and U.2.2.3, "Seismic Design."*

B 10.4.3.3-9 *The basis for this technical specification is 10 CFR 72.212(b)(2)(i)(B).*

B 10.4.3.3-10 *The basis for this technical specification is 10 CFR 72.212(b)(3).*

B 10.4.3.3-11 *The basis for this technical specification is 10 CFR 72.212(b)(2)(i)(B).*

B 10.4.3.3.7 Seismic Restraints

BASES

For the Provision of TC Seismic Restraint Inside the Spent Fuel Pool Building as a Function of Horizontal Acceleration and Loaded Cask Weight, the basis is the calculation of overturning and restoring moments.

B 10.5.2.4 RADIATION PROTECTION PROGRAM

B 10.5.2.4a ALARA Assessment

BASES

The basis for the ALARA assessment is 10 CFR 72.21.2 (b)(2)(i)(C).

B 10.5.2.4b DSC Dye Penetrant Test of Closure Welds

BASES

Article NB-5000 Examination, ASME Boiler and Pressure Vessel Code, Section III, Division 1, Sub-Section NB.

B 10.5.2.4c Leak Test

BASES

If the DSC leaked at the maximum acceptable rate of $1.0x10^{-4}$ atm · cm^3/s for a period of 20 years, about 63,100 cc of helium would escape from the DSC. This is about 1% of the 6.3×10^6 cm^3 of helium initially introduced in the DSC. This amount of leakage would have a negligible effect on the inert environment of the DSC cavity. (Reference: American National Standards Institute, ANSI N14.5-1987, For Radioactive Materials—Leakage Tests on Packages for Shipment," Appendix B3).

The 61BT, 32PT, 24PHB, 24PTH, 61BTH and 32PTH1 DSC will maintain an inert atmosphere around the fuel and radiological consequences will be negligible, since it is designed and tested to be leak tight.

B 10.5.2.4d Maximum DSC Removable Surface Contamination

BASES

This non-fixed contamination level is consistent with the requirements of 10 CFR 71.87(i)(1) and 49 CFR 173.443, which regulate the use of spent fuel shipping containers. Consequently, these contamination levels are considered acceptable for exposure to the general environment. This level will also ensure that contamination levels of the inner surfaces of the HSM and potential releases of radioactive material to the environment are minimized.

B 10.5.2.4.e Transfer Cask Dose Rates

BASES

These dose rates are based on the shielding analysis for the various DSCs included in the UFSAR Chapter 7 and Appendices J, K, M, N, P, T, U, and W, with some added margin for uncertainty.

B 10.5.2.5 HSM or HSM-H Thermal Monitoring Program

BASES

For Visual Inspection of HSM or HSM-H Air Inlets and Outlets (Front Wall and Roof Birdscreen), the concrete temperature could exceed 350°F in the accident circumstances of complete blockage of all vents. Concrete temperatures over 350°F in accidents (without the presence of water or steam) can have uncertain impact on concrete strength and durability. A conservative analysis (adiabatic heat case) of complete blockage of all air inlets or outlets indicates that the concrete can reach the accident temperature limit of 350°F in the time periods specified for HSM. For HSM-H, the time period specified ensures that blockage will not exist for periods longer than that assumed in the Safety analysis presented in Appendix P, Appendix T and Appendix U of the FSAR. At the analyzed time limit, the fuel cladding temperature remains well below the accident limit of 1058°F.

For HSM or HSM-H Thermal Performance, the temperature measurement should be of sufficient scope to provide the licensee with a positive means to identify conditions which threaten to approach temperature criteria for proper HSM or HSM-H operation and allow for the correction of off-normal thermal conditions that could lend to exceeding the concrete and fuel clad temperature criteria.

B 10.5.2.6 Hydrogen Gas Monitoring for Specified DSCs

BASES

The basis for this technical specification is the safety concern of keeping the combustible mixture concentration below flammability limits while welding.

B 10.5.3 Cask TRANSFER Controls

B 10.5.3.1 TC/DSC Lifting/Handling Height Limits

BASES

For the TC/DSC Handling Height Outside the Spent Fuel Pool Building, the NRC evaluation of the TC/DSC drop analysis concurred that drops up to 80 inches, of the DSC inside the TC, can be sustained without breaching the confinement boundary, preventing removal of spent fuel assemblies, or causing a criticality accident. This specification ensures that handling height limits will not be exceeded in transit to, or at the storage pad.

Acceptable damage may occur to the TC, DSC, and the fuel stored in the DSC, for drops of height greater than 15 inches. The specification requiring inspection of the DSC and fuel following a drop of 15 inches or greater ensures that the spent fuel will continue to meet the requirements for storage, the DSC will continue to provide confinement, and the TC will continue to provide its design functions of DSC transfer and shielding.

For the TC/DSC Lifting Heights as a Function of Low Temperature and Location, the basis for the low temperature and height limits is ANSI N14.6-1986 paragraph 4.2.6 which requires at least 40°F higher service temperature than nil ductility transition (NDT) temperature for the TC. In the case of the standardized TC, the test temperature is -40°F; therefore, although the NDT temperature is not determined, the material will have the required 40°F margin if the ambient temperature is 0°F or higher. This assumes the material service temperature is equal to the ambient temperature.

For the TC/DSC Transfer Operations at High Ambient Temperatures (24P, 52B, 61BT, 32PT, 24PHB, 24PTH, or 61BTH DSC only), the basis for the low temperature limit for the DSC is NUREG/CR-1815. The basis for the handling height limits is the NRC evaluation of the structural integrity of the DSC to drop heights of 80 inches and less.

For the NUHOMS®-24P, 52B and 61BT systems, the basis for the high temperature limit is PNL-6189 (Reference 1) for the fuel clad limit, the manufacturer's specification for neutron shield, and the design basis pressure of the TC internal cavity pressure. For the NUHOMS®-32PT, 24PHB and 24PTH systems, the fuel cladding limits are based on ISG-11, Revision 2 (Reference 3). For the NUHOMS®-61BTH system and the NUHOMS®-61BT system with FANP 9x9-2 fuel assemblies, the fuel cladding limits are based on ISG-11 Revision 3 (Reference 4).

For the TC/DSC Transfer at High Ambient Temperatures (32PTH1 DSC Only), the fuel cladding limits are based on ISG-11 Revision 3 (Reference 4).

B 10.5.3.2 Cask Drop

BASES

The basis for this specification is Section 8.2.5, "Accidental Cask Drop."

B 10.5.3.3 TRANSFER CASK Alignment with HSM or HSM-H

BASES

The basis for the true position alignment tolerance is the clearance between the DSC shell, the transfer cask cavity, the HSM or HSM-H access opening, and the DSC support rails inside the HSM or HSM-H.

B 10.5.3.4 TRANSFER CASK Dose Rate Evaluation Program

BASES

For Transfer Cask Dose Rates with a Loaded 24P, 52B, 61BT, or 32PT DSC, the basis is the shielding analysis presented in Section 7.0, Appendix J, Appendix K and Appendix M of the FSAR.

For Transfer Cask Dose Rates with a Loaded 24PHB DSC, the basis is the shielding analysis presented in Appendix N of the FSAR.

For Transfer Cask Dose Rates with a Loaded 24PTH-S or 24PTH-L DSC, the basis is the shielding analysis presented in Appendix P of the FSAR.

For Transfer Cask Dose Rates with a Loaded 24PTH-S-LC DSC, the basis is the shielding analysis presented in Appendix P of the FSAR.

For Transfer Cask Dose Rates with a Loaded 61BTH DSC, the basis is the shielding analysis presented in Appendix T of the FSAR.

For Transfer Cask Dose Rates with a Loaded 32PTH1 DSC, the basis is the shielding analysis presented in Appendix U of the FSAR.

B 10.5.4 HSM or HSM-H Dose Rate Evaluation Program

BASES

The specified dose rates provide as-low-as-is-reasonably- achievable on-site and off-site doses in accordance with 10 CFR Part 20 and 10 CFR 72.104(a).

- *The basis for HSM Dose Rates with a Loaded 24P, 52B or 61BT DSC limit is the shielding analysis presented in Section 7.0, Appendix J, and Appendix K of the FSAR.*
- *The basis for HSM Dose Rates with a Loaded 32PT DSC Only limit is the shielding analysis presented in Appendix M of the FSAR.*
- *The basis for HSM Dose Rates with a Loaded 24PHB DSC Only limit is the shielding analysis presented in Appendix N of the FSAR. The basis for this limit is the shielding analysis presented in Appendix P of the FSAR.*
- *The basis for HSM-H Dose Rates with a Loaded 24PTH-S or 24PTH-L DSC Only limit is the shielding analysis presented in Appendix P of the FSAR.*
- *The basis for HSM or HSM-H Dose Rates with a Loaded 24PTH-S-LC DSC Only limit is the shielding analysis presented in Appendix P of the FSAR.*

- *The basis for HSM-H Dose Rates with a Loaded Type 2 61BTH DSC Only limit is the shielding analysis presented in Appendix T of the FSAR.*
- *The basis for this HSM or HSM-H Dose Rates with a loaded Type 1 61BTH DSC Only is the shielding analysis presented in Appendix T of the FSAR.*
- *The basis for this HSM-H Dose Rates with a 32PTH1 DSC Only is the shielding analysis presented in Appendix U of the FSAR.*

Table K.3.1-2
ASME Code Alternatives for the NUHOMS®-61BT DSC Confinement Boundary

Reference ASME Code Section/Article	Code Requirement	Alternatives, Justification & Compensatory Measures
NCA	*All*	*Not compliant with NCA. Quality Assurance is provided according to 10 CFR 72 Subpart G in lieu of NCA-4000.*
NCA-1140	*Use of Code editions and addenda*	*Code edition and addenda other than those specified in Section 4.2.2 may be used for construction, but in no case earlier than 3 years before that specified in the Table.* *Materials produced and certified in accordance with ASME Section II material specification from Code Editions and Addenda other than those specified in Section 4.2.2 may be used, so long the materials meet all the requirements of Article 2000 of the applicable Subsection of the Section III Edition and Addenda used for construction.*
NB-1100	*Requirements for Code Stamping of Components, Code reports and certificates, etc.*	*Code Stamping is not required. As Code Stamping is not required, the fabricator is not required to hold an ASME "N" or "NPT" stamp, or to be ASME Certified.*
NB-1132	Attachments with a pressure retaining function, including stiffeners, shall be considered part of the component.	Bottom shield plug and outer bottom cover plate are outside code jurisdiction; these components together are much larger than required to provide stiffening for the inner bottom cover plate; the weld that retains the outer bottom cover plate and with it the bottom shield plug is subject to root and final PT examination.
NB-2130	*Material must be supplied by ASME approved material suppliers.*	*Material is certified to meet all ASME Code criteria but is not eligible for certification or Code Stamping if a non-ASME fabricator is used. As the fabricator is not required to be ASME certified, material certification to NB-2130 is not possible. Material traceability and certification are maintained in accordance with TN's NRC approved QA program.*
NB-4121	*Material Certification by Certificate Holder*	
NB-4243 and NB-5230	Category C weld joints in vessels and similar weld joints in other components shall be full penetration joints. These welds shall be examined by UT or RT and either PT or MT	The joints between the top outer and inner cover plates and containment shell are designed and fabricated per ASME Code Case N-595-1. This includes the inner top cover plate weld around the vent and siphon block. The welds are partial penetration welds and the root and final layer are PT examined. The weld between the vent and siphon block and the shell is made at the fabricator's shop and receives a final PT examination.
NB-6100 and 6200	All completed pressure retaining systems shall be pressure tested	The vent and siphon block is not pressure tested due to the manufacturing sequence. The siphon block weld is helium leak tested when fuel is loaded and then covered with the outer top closure plate.
NB-7000	*Overpressure Protection*	*No overpressure protection is provided for the NUHOMS® DSCs. The function of the DSC is to contain radioactive materials under normal, off-normal and hypothetical accident conditions postulated to occur during transportation and storage. The DSC is designed to withstand the maximum possible internal pressure considering 100% fuel rod failure at maximum accident temperature.*

Table K.3.1-2
ASME Code Alternatives for the NUHOMS®-61BT DSC Confinement Boundary

Reference ASME Code Section/Article	***Code Requirement***	***Alternatives, Justification & Compensatory Measures***
NB -8000	*Requirements for nameplates, stamping & reports per NCA-8000*	*The NUHOMS® DSC nameplate provides the information required by 10CFR71, 49CFR173 and 10CFR72 as appropriate. Code stamping is not required for the DSC. QA data packages are prepared in accordance with the requirements of TN's approved QA program.*
NB-5000	*NDE Personnel must be qualified to edition of SNT-TC-1A*	*Permit use of more recent edition of SNT-TC-1A.*

Table K.3.1-3
ASME Code Alternatives for the NUHOMS®-61BT DSC Basket

Reference ASME Code Section/Article	*Code Requirement*	*Alternatives, Justification & Compensatory Measures*
NCA	*All*	*Not compliant with NCA. Quality Assurance is provided according to 10 CFR 72 Subpart G in lieu of NCA-4000.*
NCA-1140	*Use of Code editions and addenda*	*Code edition and addenda other than those specified in Section 4.2.2 may be used for construction, but in no case earlier than 3 years before that specified in the Table.* *Materials produced and certified in accordance with ASME Section II material specification from Code Editions and Addenda other than those specified in Section 4.2.2 may be used, so long the materials meet all the requirements of Article 2000 of the applicable Subsection of the Section III Edition and Addenda used for construction.*
NG-1100	*Requirements for Code Stamping of Components, Code reports and certificates, etc.*	*Code Stamping is not required. As Code Stamping is not required, the fabricator is not required to hold an ASME "N" or "NPT" stamp, or to be ASME Certified.*
NG-2000	*Use of ASME Code Material*	*Some baskets include neutron absorber and aluminum plates that are not ASME Code Class 1 material. They are used for criticality safety and heat transfer, and are only credited in the structural analysis with supporting their own weight and transmitting bearing loads through their thickness.*

4. Decontaminate the exposed surfaces of the DSC shell perimeter and remove the inflatable cask/DSC annulus seal.

5. Connect the cask drain line to the cask, open the cask cavity drain port and allow water from the annulus to drain out until the water level is approximately twelve inches below the top edge of the DSC shell. Take swipes around the outer surface of the DSC shell and check for smearable contamination in accordance with the Technical Specification 5.2.4.d limits.

6. Drain approximately 1100 gallons of water (as indicated on a rotometer) from the DSC back into the fuel pool or other suitable location using the VDS or an optional liquid pump.

7. Disconnect hose from the DSC siphon port.

8. Install the automatic welding machine onto the inner top cover plate and place the inner top cover plate with the automatic welding machine onto the DSC. Verify proper fit-up of the inner top cover plate with the DSC shell.

9. Check radiation levels along surface of the inner top cover plate. Temporary shielding may be installed as necessary to minimize personnel exposure.

10. Insert a ¼ inch tygon tubing of sufficient length through the vent port such that it terminates just below the DSC shield plug. Connect the tygon tubing to a hydrogen monitor to allow continuous monitoring of the hydrogen atmosphere in the DSC cavity during welding of the inner cover plate, *in compliance with Technical Specification 5.2.6. Optionally, other methods may be used for continuous monitoring of the hydrogen atmosphere in the DSC cavity during welding of the inner top cover plate, to comply with the Technical Specification.*

11. Cover the cask/DSC annulus to prevent debris and weld splatter from entering the annulus.

12. Ready the automatic welding machine and tack weld the inner top cover plate to the DSC shell. Install the inner top cover plate weldment and remove the automatic welding machine.

CAUTION: Continuously monitor the hydrogen concentration in the DSC cavity using the tygon tube arrangement described in step *10* during the inner top cover plate cutting/welding operations. Verify that the measured hydrogen concentration does not exceed a safety limit of 2.4% (8.4). If this limit is exceeded, stop all welding operations and purge the DSC cavity with 2-3 psig helium (or any other inert medium) via the ¼" tygon tubing to reduce the hydrogen concentration safely below the 2.4% limit.

13. Perform dye penetrant weld examination of the inner top cover plate weld in accordance with the Technical Specification 5.2.4.b requirements.

14. Place the strongback so that it sits on the inner top cover plate and is oriented such that:

    - the DSC siphon and vent ports are accessible;

    - the strongback stud holes line up with the TC lid bolt holes.

15. Lubricate the studs and, using a crossing pattern, adjust the strongback studs to snug tight ensuring approximately even pressure on the cover plate.

16. Connect the VDS to the DSC siphon and vent ports.

17. Install temporary shielding to minimize personnel exposure throughout the subsequent welding operations as required.

18. Engage the helium supply and open the valve on the vent port and allow helium to force the water from the DSC cavity through the siphon port.

19. Once the water stops flowing from the DSC, close the DSC siphon port and disengage the gas source.

20. Open the cask drain port valve and remove the remaining water from the cask/DSC annulus. (This step may be performed after completion of the vacuum drying procedure).

21. Connect the hose from the vent port and the siphon port to the intake of the vacuum pump. Connect a hose from the discharge side of the VDS to the plant's radioactive waste system or spent fuel pool. Connect the VDS to a helium source.

22. Open the valve on the suction side of the pump, start the VDS and draw a vacuum on the DSC cavity. The cavity pressure should be reduced in steps of approximately 100 mm Hg, 50 mm Hg, 25 mm Hg, 15 mm Hg, 10 mm Hg, 5 mm Hg, and 3 mm Hg. After pumping down to each level, the pump is valved off and the cavity pressure monitored. The cavity pressure will rise as water and other volatiles in the cavity evaporate. When the cavity pressure stabilizes, the pump is valved in to complete the vacuum drying process. It may be necessary to repeat some steps, depending on the rate and extent of the pressure increase. Vacuum drying is complete when the pressure stabilizes for a minimum of 30 minutes at 3 mm Hg or less as specified in Technical Specification 3.1.1.

23. Open the valve to the vent port and allow the helium to flow into the DSC cavity.

24. Pressurize the DSC with helium to about 24 psia not to exceed 34 psia.

25. Helium leak test the inner top cover plate weld for leakage in accordance with ANSI N14.5 to a sensitivity of 1×10^{-5} atm cm^3/sec.

26. If a leak is found, repair the weld, repressurize the DSC and repeat the helium leak test.

27. Once no leaks are detected, depressurize the DSC cavity by releasing the helium through the VDS to the plant's spent fuel pool or radioactive waste system.

28. Re-evacuate the DSC cavity using the VDS. The cavity pressure should be reduced in steps of approximately 10 mm Hg, 5 mm Hg, and 3 mm Hg. After pumping down to each level, the pump is valved off and the cavity pressure is monitored. When the cavity pressure stabilizes, the pump is valved in to continue the vacuum drying process. Vacuum drying is complete when the pressure stabilizes for a minimum of 30 minutes at 3 mm Hg or less in accordance with Technical Specification 3.1.1 limits.

29. Open the valve on the vent port and allow helium to flow into the DSC cavity to pressurize the DSC to about 17.2 psia in accordance with Technical Specification 3.1.2.b limits.

30. Close the valves on the helium source.

31. Remove the Strongback, decontaminate as necessary, and store.

K.8.1.4 DSC Sealing Operations

1. Disconnect the VDS from the DSC. Seal weld the prefabricated plugs over the vent and siphon ports and perform a dye penetrant weld examination in accordance with the Technical Specification 5.2.4.b requirements.

2. Install the automatic welding machine onto the outer top cover plate and place the outer top cover plate with the automatic welding system onto the DSC. Verify proper fit up of the outer top cover plate with the DSC shell.

3. Tack weld the outer top cover plate to the DSC shell. Place the outer top cover plate weld root pass.

4. Helium leak test the inner top cover plate and vent/siphon port plate welds using the leak test port in the outer top cover plate in accordance with Technical Specification 5.2.4.c limits.

5. If a leak is found, remove the outer cover plate root pass, the vent and siphon port plugs and repair the inner cover plate welds. Then install the Strongback and repeat procedure steps from K.8.1.3 step 22.

6. Perform dye penetrant examination of the root pass weld. Weld out the outer top cover plate to the DSC shell and perform dye penetrant examination on the weld surface in accordance with the Technical Specification 5.2.4.b requirements.

7. Seal weld the prefabricated plug over the outer cover plate test port and perform dye penetrant weld examinations in accordance with Technical Specification 5.2.4.b requirement.

8. Remove the automatic welding machine from the DSC. Rig the cask top cover plate and lower the cover plate onto the transfer cask.

9. Bolt the cask cover plate into place, tightening the bolts to the required torque in a star pattern.

K.8.1.5 Transfer Cask Downending and Transport to ISFSI

NOTE:

Alternate Procedure for Downending of Transfer Cask: Some plants have limited floor hatch openings above the cask/trailer/skid, which limit crane travel (within the hatch opening) that would be needed in order to downend the TC with the trailer/skid in a stationary position. For these situations, alternate procedures are to be developed on a plant-specific basis, with detailed steps for downending.

1. Drain the neutron shield to an acceptable location.

2. Re-attach the transfer cask lifting yoke to the crane hook, as necessary. Ready the transport trailer and cask support skid for service.

3. Move the scaffolding away from the cask as necessary. Engage the lifting yoke and lift the cask over the cask support skid on the transport trailer.

4. The transport trailer should be positioned so that cask support skid is accessible to the crane with the trailer supported on the vertical jacks.

5. Position the cask lower trunnions onto the transfer trailer support skid pillow blocks.

6. Move the crane forward while simultaneously lowering the cask until the cask upper trunnions are just above the support skid upper trunnion pillow blocks.

7. Inspect the positioning of the cask to insure that the cask and trunnion pillow blocks are properly aligned.

8. Lower the cask onto the skid until the weight of the cask is distributed to the trunnion pillow blocks.

9. Inspect the trunnions to insure that they are properly seated onto the skid and install the trunnion tower closure plates.

10. Fill the neutron shield.

11. Remove the bottom ram access cover plate from the cask. Install the two-piece temporary neutron/gamma shield plug to cover the bottom ram access. Install the ram trunnion support frame on the bottom of the transfer cask. (The temporary shield plug and ram trunnion support frame are not required with integral ram/trailer.)

K.8.1.6 DSC Transfer to the HSM

1. Prior to transporting the cask to the ISFSI or prior to positioning the transfer cask at the HSM designated for storage, remove the HSM door using a porta-crane, inspect the cavity of the HSM, removing any debris and ready the HSM to receive a DSC. The doors on adjacent HSMs should remain in place.

2. Inspect the HSM air inlet and outlets to ensure that they are clear of debris. Inspect the screens on the air inlet and outlets for damage.

   CAUTION: Verify that the requirements of Technical Specification 5.3.1.B, "TC/DSC Transfer Operations at High Ambient Temperatures" are met prior to next step.

3. Using a suitable heavy haul tractor, transport the cask from the plant's fuel/reactor building to the ISFSI along the designated transfer route.

4. Once at the ISFSI, position the transport trailer to within a few feet of the HSM.

5. Check the position of the trailer to ensure the centerline of the HSM and cask approximately coincide. If the trailer is not properly oriented, reposition the trailer, as necessary.

6. Using a porta-crane, unbolt and remove the cask top cover plate.

7. Back the cask to within a few inches of the HSM, set the trailer brakes and disengage the tractor. Drive the tractor clear of the trailer. Extend the transfer trailer vertical jacks.

8. Connect the skid positioning system hydraulic power unit to the positioning system via the hose connector panel on the trailer, and power it up. Remove the skid tie-down bolts and use the skid positioning system to bring the cask into approximate vertical and horizontal alignment with the HSM. Using optical survey equipment and the alignment marks on the cask and the HSM, adjust the position of the cask until it is properly aligned with the HSM.

9. Using the skid positioning system, fully insert the cask into the HSM access opening docking collar.

10. Secure the cask trunnions to the front wall embedments of the HSM using the cask restraints.

11. After the cask is docked with the HSM, verify the alignment of the transfer cask using the optical survey equipment.

12. Position the hydraulic ram behind the cask in approximate horizontal alignment with the cask and level the ram. Remove either the bottom ram access cover plate or the outer plug of the two-piece temporary shield plug. Power up the ram hydraulic power supply and extend the ram through the bottom cask opening into the DSC grapple ring.

13. Activate the hydraulic cylinder on the ram grapple and engage the grapple arms with the DSC grapple ring.

14. Recheck all alignment marks in accordance with the Technical Specification 5.3.3 limits and ready all systems for DSC transfer.

15. Activate the hydraulic ram to initiate insertion of the DSC into the HSM. Stop the ram when the DSC reaches the support rail stops at the back of the module.

16. Disengage the ram grapple mechanism so that the grapple is retracted away from the DSC grapple ring.

17. Retract and disengage the hydraulic ram system from the cask and move it clear of the cask. Remove the cask restraints from the HSM.

18. Using the skid positioning system, disengage the cask from the HSM access opening. Insert the inner tube of the DSC axial retainer.

19. Install the HSM door using a portable crane and secure it in place. Verify that the loaded HSM meets the dose rate limits of Technical Specification 5.4.2.

20. Replace the transfer cask top cover plate. Secure the skid to the trailer, retract the vertical jacks and disconnect the skid positioning system.

21. Tow the trailer and cask to the designated equipment storage area. Return the remaining transfer equipment to the storage area.

22. Close and lock the ISFSI access gate and activate the ISFSI security measures.

K.8.1.7 Monitoring Operations

1. Perform routine security surveillance in accordance with the licensee's ISFSI security plan.

NOTE: Perform one of the two alternate surveillance activities listed below.

2a. Perform a daily visual surveillance of the HSM air inlets and outlets to insure that no debris is obstructing the HSM vents in accordance with Technical Specification 5.2.5.a requirements.

2b. Perform a temperature measurement of the thermal performance, for each HSM, on a daily basis in accordance with Technical Specification 5.2.5.b requirements.

19. Obtain a sample of the DSC atmosphere, if necessary (e.g., at the end of service life). Fill the DSC with water from the fuel pool through the siphon port with the vent port open and routed to the plant's off-gas system.

CAUTION:

(a) The water fill rate must be regulated during this reflooding operation to ensure that the DSC vent pressure does not exceed 20.0 psig.

(b) Provide for continuous hydrogen monitoring of the DSC cavity atmosphere during all subsequent cutting operations to ensure that a safety limit of 2.4% is not exceeded (8.4) *and in compliance with Technical Specification 5.2.6.* Purge with 2-3 psig helium (or any other inert medium) as necessary to maintain the hydrogen concentration safely below this limit.

20. Place welding blankets around the cask and scaffolding.

21. Using plasma arc-gouging, a mechanical cutting system or other suitable means, remove the seal weld from the outer top cover plate and DSC shell. A fire watch should be placed on the scaffolding with the welder, as appropriate. The exhaust system should be operating at all times.

22. The material or waste from the cutting or grinding process should be treated and handled in accordance with the plant's low level waste procedures unless determined otherwise.

23. Remove the top of the tent, if necessary.

24. Remove the exhaust hood, if necessary.

25. Remove the DSC outer top cover plate.

26. Reinstall tent and temporary shielding, as required. Remove the seal weld from the inner top cover plate to the DSC shell in the same manner as the top cover plate. Remove the inner top cover plate. Remove any remaining excess material on the inside shell surface by grinding.

27. Clean the cask surface of dirt and any debris which may be on the cask surface as a result of the weld removal operation. Any other procedures which are required for the operation of the cask should take place at this point as necessary.

28. Engage the yoke onto the trunnions, install eyebolts into the top shield plug and connect the rigging cables to the eyebolts.

Table M.3.1-1
Alternatives to the ASME Code for the NUHOMS®-32PT DSC Confinement Boundary

Reference ASME Code Section/Article	Code Requirement	Alternatives, Justification & Compensatory Measures
NCA	*All*	*Not compliant with NCA. Quality Assurance is provided according to 10 CFR 72 Subpart G in lieu of NCA-4000.*
NCA-1140	*Use of Code editions and addenda*	*Code edition and addenda other than those specified in Section 4.2.2 may be used for construction, but in no case earlier than 3 years before that specified in the Table.* *Materials produced and certified in accordance with ASME Section II material specification from Code Editions and Addenda other than those specified in Section 4.2.2 may be used, so long the materials meet all the requirements of Article 2000 of the applicable Subsection of the Section III Edition and Addenda used for construction.*
NB-1100	*Requirements for Code Stamping of Components, Code reports and certificates, etc.*	*Code Stamping is not required. As Code Stamping is not required, the fabricator is not required to hold an ASME "N" or "NPT" stamp, or to be ASME Certified.*
NB-1132	*Attachments with a pressure retaining function, including stiffeners, shall be considered part of the component.*	*Bottom shield plug and outer bottom cover plate are outside code jurisdiction; these components together are much larger than required to provide stiffening for the inner bottom cover plate; the weld that retains the outer bottom cover plate and with it the bottom shield plug is subject to root and final PT examination.*
NB-2130	*Material must be supplied by ASME approved material suppliers.*	*Material is certified to meet all ASME Code criteria but is not eligible for certification or Code Stamping if a non-ASME fabricator is used. As the fabricator is not required to be ASME certified, material certification to NB-2130 is not possible. Material traceability and certification are maintained in accordance with TN's NRC approved QA program.*
NB-4121	*Material Certification by Certificate Holder*	
NB-4243 and NB-5230	Category C weld joints in vessels and similar weld joints in other components shall be full penetration joints. These welds shall be examined by UT or RT and either PT or MT	The joints between the top outer and inner cover plates and containment shell are designed and fabricated per ASME Code Case N-595-2, which provides alternative requirements for the design and examination of spent fuel canister closures. This includes the inner top cover plate weld around the vent & siphon block and the vent and siphon block welds to the shell. The closure welds are partial penetration welds and the root and final layer are subject to PT examination (in lieu of volumetric examination) in accordance with the provisions of ASME Code Case N-595-2. The 32PT closure system employs austenitic stainless steel shell, lid materials, and welds. Because austenitic stainless steels are not subject to brittle failure at the operating temperatures of the DSC, crack propagation is not a concern. Thus, multi-level PT examination provides reasonable assurance that flaws of interest will be identified. The PT examination is done by qualified personnel, in accordance with Section V and the acceptance standards of Section III, Subsection NB-5000. This alternative does not apply to other shell confinement welds, i.e., the longitudinal and circumferential welds applied to the DSC shell, and the inner bottom cover plate-to-shell weld which comply with NB-4243 and NB-5230.

Table M.3.1-1
Alternatives to the ASME Code for the NUHOMS®-32PT DSC Confinement Boundary
(Concluded)

Reference ASME Code Section/Article	Code Requirement	Alternatives, Justification & Compensatory Measures
NB-6100 and 6200	All pressure retaining components and completed systems shall be pressure tested. The preferred method shall be hydrostatic test.	The NUHOMS®-32PT DSC is pressure tested in accordance with ASME Code Case N-595-2. The shield plug support ring and the vent and siphon block are not pressure tested due to the manufacturing sequence. The support ring is not a pressure-retaining item and the vent and siphon block weld is helium leak tested after fuel is loaded to the same criteria as the inner top closure plate-to-shell weld (ANSI N14.5-1997 leaktight criteria).
NB-7000	*Overpressure Protection*	*No overpressure protection is provided for the NUHOMS® DSCs. The function of the DSC is to contain radioactive materials under normal, off-normal and hypothetical accident conditions postulated to occur during transportation and storage. The DSC is designed to withstand the maximum possible internal pressure considering 100% fuel rod failure at maximum accident temperature.*
NB -8000	*Requirements for nameplates, stamping & reports per NCA-8000*	*The NUHOMS® DSC nameplate provides the information required by 10CFR71, 49CFR173 and 10CFR72 as appropriate. Code stamping is not required for the DSC. QA data packages are prepared in accordance with the requirements of TN's approved QA program.*
NB-5000	*NDE Personnel must be qualified to edition of SNT-TC-1A*	*Permit use of more recent edition of SNT-TC-1A.*

Table M.3.1-2
Alternatives to the ASME Code Exceptions for the NUHOMS®-32PT DSC Basket Assembly

Reference ASME Code Section/Article	Code Requirement	Alternatives, Justification & Compensatory Measures
NCA	*All*	*Not compliant with NCA. Quality Assurance is provided according to 10 CFR 72 Subpart G in lieu of NCA-4000.*
NCA-1140	*Use of Code editions and addenda*	*Code edition and addenda other than those specified in Section 4.2.2 may be used for construction, but in no case earlier than 3 years before that specified in the Table.* *Materials produced and certified in accordance with ASME Section II material specification from Code Editions and Addenda other than those specified in Section 4.2.2 may be used, so long the materials meet all the requirements of Article 2000 of the applicable Subsection of the Section III Edition and Addenda used for construction.*
NG-1100	*Requirements for Code Stamping of Components, Code reports and certificates, etc.*	*Code Stamping is not required. As Code Stamping is not required, the fabricator is not required to hold an ASME "N" or "NPT" stamp, or to be ASME Certified.*
NG-2000	Use of ASME Material	*Some baskets include neutron absorber and aluminum plates that are not ASME Code Class 1 material. They are used for criticality safety and heat transfer, and are only credited in the structural analysis with supporting their own weight and transmitting bearing loads through their thickness.* Material properties in the ASME Code for Type 6061 aluminum are limited to 400°F to preclude the potential for annealing out the hardening properties. Annealed properties (as published by the Aluminum Association and the American Society of Metals) are conservatively assumed for the solid aluminum rails for use above the Code temperature limits.
NG-2130	*Material must be supplied by ASME approved material suppliers.*	*Material is certified to meet all ASME Code criteria but is not eligible for certification or Code Stamping if a non-ASME fabricator is used. As the fabricator is not required to be ASME certified, material certification to NB-2130 is not possible. Material traceability and certification are maintained in accordance with TN's NRC approved QA program.*
NG-4121	*Material Certification by Certificate Holder*	
NG -8000	*Requirements for nameplates, stamping & reports per NCA-8000*	*The NUHOMS® DSC nameplate provides the information required by 10CFR71, 49CFR173 and 10CFR72 as appropriate. Code stamping is not required for the DSC. QA data packages are prepared in accordance with the requirements of TN's approved QA program.*
NG-3000/ Section II, Part D, Table 2A	Maximum temperature limit for XM-19 plate material is 800°F	Not compliant with ASME Section II Part D Table 2A material temperature limit for XM-19 steel for the postulated transfer accident case (117°F, loss of sunshade, loss of neutron shield). This is a post-drop accident scenario, where the calculated maximum steady state temperature is 852°F, the expected reduction in material strength is small (less than 1 ksi by extrapolation), and the only primary stresses in the basket grid are deadweight stresses. The recovery actions following the postulated drop accident are as described in Section 8.2.5 of the FSAR.

8. Install the automatic welding machine onto the inner top cover plate and place the inner top cover plate with the automatic welding machine onto the DSC. Verify proper fit-up of the inner top cover plate with the DSC shell.

9. Check radiation levels along surface of the inner top cover plate. Temporary shielding may be installed as necessary to minimize personnel exposure.

   CAUTION: Insert a 1/4 inch tygon tubing of sufficient length through the vent port such that it terminates just below the DSC shield plug. Connect the tygon tubing to a hydrogen monitor to allow continuous monitoring of the hydrogen atmosphere in the DSC cavity during welding of the inner cover plate, *in compliance with Technical Specification 5.2.6. Optionally, other methods may be used for continuous monitoring of the hydrogen atmosphere in the DSC cavity during welding of the inner top cover plate, to comply with the Technical Specification.*

10. Cover the cask/DSC annulus to prevent debris and weld splatter from entering the annulus.

11. Ready the automatic welding machine and tack weld the inner top cover plate to the DSC shell. Install the inner top cover plate weldment and remove the automatic welding machine.

    CAUTION: Continuously monitor the hydrogen concentration in the DSC cavity using the tygon tube arrangement described in step 9 during the inner top cover plate cutting/welding operations. Verify that the measured hydrogen concentration does not exceed a safety limit of 2.4% [8.4]. If this limit is exceeded, stop all welding operations and purge the DSC cavity with 2-3 psig helium (or any other inert medium) via the 1/4 inch tygon tubing to reduce the hydrogen concentration safely below the 2.4% limit.

12. Perform dye penetrant weld examination of the inner top cover plate weld in accordance with the Technical Specification 5.2.4.b requirements.

13. Connect the VDS to the DSC siphon and vent ports.

14. Install temporary shielding to minimize personnel exposure throughout the subsequent welding operations as required.

15. Engage the helium supply and open the valve on the vent port and allow helium gas to force the water from the DSC cavity through the siphon port.

16. Once the water stops flowing from the DSC, close the DSC siphon port and disengage the gas source.

17. Connect the hose from the vent port and the siphon port to the intake of the vacuum pump. Connect a hose from the discharge side of the VDS to the plant's radioactive waste system or spent fuel pool. Connect the VDS to a helium source.

18. Open the valve on the suction side of the pump, start the VDS and draw a vacuum on the DSC cavity. The cavity pressure should be reduced in steps of approximately 100 mm Hg, 50 mm Hg, 25 mm Hg, 15 mm Hg, 10 mm Hg, 5 mm Hg, and 3 mm Hg. After pumping down to each level, the pump is valved off and the cavity pressure monitored. The cavity pressure will rise as water and other volatiles in the cavity evaporate. When the cavity

use of prudent housekeeping measures and monitoring of airborne particulates. Procedures may require personnel to perform the work using respirators or supplied air.

If fuel needs to be removed from the DSC, either at the end of service life or for inspection after an accident, precautions must be taken against the potential for the presence of damaged or oxidized fuel and to prevent radiological exposure to personnel during this operation. A sampling of the atmosphere within the DSC will be taken prior to inspection or removal of fuel.

If the work is performed outside the fuel/reactor building, a tent may be constructed over the work area, which may be kept under a negative pressure to control airborne particulates. Any radioactive gas release will be Kr-85, which is not readily captured. Whether the krypton is vented through the plant stack or allowed to be released directly depends on the plant operating requirements.

Following opening of the DSC, the cask and DSC are filled with water prior to lowering the top of cask below the surface of the fuel pool to prevent a sudden inrush of pool water. Cask placement into the pool is performed in the usual manner. Fuel unloading procedures will be governed by the plant operating license under 10CFR50. The generic procedures for these operations are as follows:

15. Locate the DSC siphon and vent port using the indications on the top cover plate. Place a portable drill press on the top of the DSC. Position the drill with the siphon port.

16. Place an exhaust hood or tent over the DSC, if necessary. The exhaust should be filtered or routed to the site radwaste system.

17. Drill a hole through the DSC top cover plate to expose the siphon port quick connect.

18. Drill a second hole through the top cover plate to expose the vent port quick connect.

19. Obtain a sample of the DSC atmosphere, if necessary (e.g., at the end of service life). Fill the DSC with water from the fuel pool (and meeting the requirements of Technical Specification 3.2.1, if required) through the siphon port with the vent port open and routed to the plant's off-gas system.

    CAUTION:

    (a) The water fill rate must be regulated during this reflooding operation to ensure that the DSC vent pressure does not exceed 20.0 psig.

    (b) Provide for continuous hydrogen monitoring of the DSC cavity atmosphere during all subsequent cutting operations to ensure that a safety limit of 2.4% is not exceeded [8.4] *and in compliance with Technical Specification 5.2.6.* Purge with 2-3 psig helium (or any other inert medium) as necessary to maintain the hydrogen concentration safely below this limit.

20. Place welding blankets around the cask and scaffolding.

21. Using plasma arc-gouging, a mechanical cutting system or other suitable means, remove the seal weld from the outer top cover plate and DSC shell. A fire watch should be placed on the

CAUTION: Verify that all the lifting height restrictions as a function of temperature specified in Technical Specification 5.3.1.A can be met in the following steps which involve lifting of the TC.

N.8.1.3 24PHB DSC Drying and Backfilling

All operations are the same as described in Section 5.1.1.3. Step 28 is revised to state that the DSC helium backfill pressure requirements of Technical Specification 3.1.2.b apply. Steps 6, 7, 9, 11, 12, 13, 24, and 30 are revised as follows:

6. Install the automated welding machine onto the inner top cover plate and place the inner top cover plate with the automated welding machine onto the DSC. Verify proper fit-up of the inner top cover plate with the DSC shell.

   For the optional 24PHBL "shifted shielding" configuration, install the automated welding machine onto the cover plate of the top shield plug assembly. Verify proper fit-up of the assembly with the DSC shell. Drain down the water around the shield plug assembly as necessary to allow proper fit-up verification.

7. Check radiation levels along surface of the inner top cover plate or along the surface of the top shield plug assembly (for the optional 24PHBL "shifted shielding" configuration). Temporary shielding may be installed as necessary to minimize personnel exposure.

9. Disconnect the VDS from the DSC.

   CAUTION: *A*n additional step is required to address Bulletin 96-04 concerns (5.5). This step provides for continuous hydrogen monitoring during the welding of the top inner cover plate as described in step 11 (5.4) *and for compliance with Technical Specification 5.2.6.* Insert a ¼ inch tygon tubing of sufficient length through the vent port such that it terminates just below the DSC shield plug. Connect the tygon tubing to a hydrogen monitor to allow continuous monitoring of the hydrogen atmosphere in the DSC cavity during welding of the inner cover plate or the top shield plug assembly (for the optional 24PHBL "shifted shielding" configuration). *Optionally, other methods may be used for continuous monitoring of the hydrogen atmosphere in the DSC cavity during welding of the inner top cover plate, to comply with the Technical Specification. E*nsure that the DSC internal pressure remains atmospheric during welding of the inner top closure plate or the top shield plug assembly (for the alternate 24PHBL "shifted shielding" configuration).

11. Ready the automated welding machine and tack weld the inner top cover plate or the top shield plug assembly (for the optional 24PHBL "shifted shielding" configuration) to the DSC shell. Complete the inner top cover plate weldment and remove the automated welding machine.

Table P.3.1-1
Alternatives to the ASME Code for the NUHOMS®-24PTH DSC Confinement Boundary

Reference ASME Code Section/Article	Code Requirement	Alternatives, Justification & Compensatory Measures
NCA	*All*	*Not compliant with NCA. Quality Assurance is provided according to 10 CFR 72 Subpart G in lieu of NCA-4000.*
NCA-1140	*Use of Code editions and addenda*	*Code edition and addenda other than those specified in Section 4.2.2 may be used for construction, but in no case earlier than 3 years before that specified in the Table.* *Materials produced and certified in accordance with ASME Section II material specification from Code Editions and Addenda other than those specified in Section 4.2.2 may be used, so long the materials meet all the requirements of Article 2000 of the applicable Subsection of the Section III Edition and Addenda used for construction.*
NB-1100	*Requirements for Code Stamping of Components, Code reports and certificates, etc.*	*Code Stamping is not required. As Code Stamping is not required, the fabricator is not required to hold an ASME "N" or "NPT" stamp, or to be ASME Certified.*
NB-1132	*Attachments with a pressure retaining function, including stiffeners, shall be considered part of the component.*	*Bottom shield plug assembly, outer bottom cover plate, lifting posts, grapple ring, grapple ring support are outside code jurisdiction; these components together are much larger than required to provide stiffening for the inner bottom cover plate; the weld that retains the outer bottom cover plate and with it the bottom shield plug is subject to root and final PT examination.*
NB-2130 *NB-4121*	*Material must be supplied by ASME approved material suppliers.* *Material Certification by Certificate Holder*	*Material is certified to meet all ASME Code criteria but is not eligible for certification or Code Stamping if a non-ASME fabricator is used. As the fabricator is not required to be ASME certified, material certification to NB-2130 is not possible. Material traceability and certification are maintained in accordance with TN's NRC approved QA program.*
NB-4243 and NB-5230	Category C weld joints in vessels and similar weld joints in other components shall be full penetration joints. These welds shall be examined by UT or RT and either PT or MT	The joints between the top outer and inner cover plates (or top forging assembly for the 24PTH-S-LC) and containment shell are designed and fabricated per ASME Code Case N-595-2, which provides alternative requirements for the design and examination of spent fuel canister closures. This includes the inner top cover plate weld around the vent & siphon block and the vent and siphon block welds to the shell. The closure welds are partial penetration welds and the root and final layer are subject to PT examination (in lieu of volumetric examination) in accordance with the provisions of ASME Code Case N-595-2. The 24PTH closure system employs austenitic stainless steel shell, lid materials, and welds. Because austenitic stainless steels are not subject to brittle failure at the operating temperatures of the DSC, crack propagation is not a concern. Thus, multi-level PT examination provides reasonable assurance that flaws of interest will be identified. The PT examination is done by qualified personnel, in accordance with Section V and the acceptance standards of Section III, Subsection NB-5000. This alternative does not apply to other shell confinement welds, i.e., the longitudinal and circumferential welds of the DSC shell, and the inner bottom cover plate-to-shell weld (or bottom forging to shell weld, as applicable) which comply with NB-4243 and NB-5230.

Table P.3.1-1
Alternatives to the ASME Code for the NUHOMS®-24PTH DSC Confinement Boundary
(Concluded)

Reference ASME Code Section/Article	Code Requirement	Alternatives, Justification & Compensatory Measures
NB-6100 and 6200	All pressure retaining components and completed systems shall be pressure tested. The preferred method shall be hydrostatic test.	The NUHOMS®-24PTH DSC is pressure tested in accordance with ASME Code Case N-595-2. The shield plug support ring and the vent and siphon block are not pressure tested due to the manufacturing sequence. The support ring is not a pressure-retaining item and the vent and siphon block weld is helium leak tested after fuel is loaded to the same criteria as the inner top closure plate-to-shell weld (ANSI N14.5-1997 leaktight criteria).
NB-7000	*Overpressure Protection*	*No overpressure protection is provided for the NUHOMS® DSCs. The function of the DSC is to contain radioactive materials under normal, off-normal and hypothetical accident conditions postulated to occur during transportation and storage. The DSC is designed to withstand the maximum possible internal pressure considering 100% fuel rod failure at maximum accident temperature.*
NB -8000	*Requirements for nameplates, stamping & reports per NCA-8000*	*The NUHOMS® DSC nameplate provides the information required by 10CFR71, 49CFR173 and 10CFR72 as appropriate. Code stamping is not required for the DSC. QA data packages are prepared in accordance with the requirements of TN's approved QA program.*
NB-5000	*NDE Personnel must be qualified to edition of SNT-TC-1A*	*Permit use of more recent edition of SNT-TC-1A.*

Table P.3.1-2
Alternatives to the ASME Code for the NUHOMS®-24PTH DSC Basket Assembly

Reference ASME Code Section/Article	Code Requirement	Alternatives, Justification & Compensatory Measures
NCA	*All*	*Not compliant with NCA. Quality Assurance is provided according to 10 CFR 72 Subpart G in lieu of NCA-4000.*
NCA-1140	*Use of Code editions and addenda*	*Code edition and addenda other than those specified in Section 4.2.2 may be used for construction, but in no case earlier than 3 years before that specified in the Table.* *Materials produced and certified in accordance with ASME Section II material specification from Code Editions and Addenda other than those specified in Section 4.2.2 may be used, so long the materials meet all the requirements of Article 2000 of the applicable Subsection of the Section III Edition and Addenda used for construction.*
NG-1100	*Requirements for Code Stamping of Components, Code reports and certificates, etc.*	*Code Stamping is not required. As Code Stamping is not required, the fabricator is not required to hold an ASME "N" or "NPT" stamp, or to be ASME Certified.*
NG-2000	Use of ASME Material	*Some baskets include neutron absorber and aluminum plates that are not ASME Code Class 1 material. They are used for criticality safety and heat transfer, and are only credited in the structural analysis with supporting their own weight and transmitting bearing loads through their thickness.* Material properties in the ASME Code for Type 6061 aluminum are limited to 400°F to preclude the potential for annealing out the hardening properties. Annealed properties (as published by the Aluminum Association and the American Society of Metals) are conservatively assumed for the aluminum transition rails for use above the Code temperature limits.
NG-2130	*Material must be supplied by ASME approved material suppliers.*	*Material is certified to meet all ASME Code criteria but is not eligible for certification or Code Stamping if a non-ASME fabricator is used. As the fabricator is not required to be ASME certified, material certification to NB-2130 is not possible. Material traceability and certification are maintained in accordance with TN's NRC approved QA program.*
NG-4121	*Material Certification by Certificate Holder*	
NG -8000	*Requirements for nameplates, stamping & reports per NCA-8000*	*The NUHOMS® DSC nameplate provides the information required by 10CFR71, 49CFR173 and 10CFR72 as appropriate. Code stamping is not required for the DSC. QA data packages are prepared in accordance with the requirements of TN's approved QA program.*
NG-3000/ Section II, Part D, Table 2A	Maximum temperature limit for Type 304 plate material is 800°F	Not compliant with ASME Section II Part D Table 2A material temperature limit for Type 304 steel for the postulated transfer accident case (117°F, loss of sunshade, loss of neutron shield). This is a post-drop accident scenario, where the calculated maximum steady state temperature is 862°F, the expected reduction in material strength is small (less than 1 ksi by extrapolation), and the only primary stresses in the basket grid are deadweight stresses. The recovery actions following the postulated drop accident are as described in Section 8.2.5 of the FSAR.

Table P.3.1-2
Alternatives to the ASME Code for the NUHOMS®-24PTH DSC Basket Assembly
(Concluded)

Reference ASME Code Section/Article	Code Requirement	Alternatives, Justification & Compensatory Measures
NG-3352	Table NG 3352-1 lists the permissible welded joints	The fusion (spot) type welds between the stainless steel insert plates (straps) and the stainless steel fuel compartment tube are not permissible welds per Table NG-3352-1. These welds are qualified by testing. The required minimum tested capacity of the welded connection (at each side of the tube) shall be 36 Kips (at room temperature). This value is based on a margin of safety (test-to-design) of 1.6, which is larger than the Code-implied margin of safety for Level D loads. The minimum capacity shall be determined by shear tests of individual specimens made from production material. The tests shall be corrected for temperature differences (test-to-design) and for material properties (actual-to-ASME Code minimum values) to demonstrate that the capacity of the welded connection with ASME minimum properties, tested at design temperatures, will meet the 36 Kips test requirement. The capacity of the welded connection is determined from the test of the weld pattern of a typical insert plate to the tube connection. *A joint efficiency (quality) factor of 1.0 is utilized for the fuel compartment longitudinal seam welds. Table NG-3352-1 permits a joint efficiency (quality) factor of 0.5 to be used for full penetration weld examined by ASME Section V visual examination (VT). For the 24PTH DSC,the compartment seam weld is thin and the weld will be made in one pass. Both surfaces of weld (inside and outside) will be fully examined b VT and therefore a factor of 2 x 0.5=1.0, will be used in the analysis. This is justified as both surfaces of the single weld pass/layer will be fully examined, and the stainless steel material that comprises the fuel compartment tubes is very ductile.*

5. Connect the cask drain line to the cask, open the cask cavity drain port and allow water from the annulus to drain out until the water level is approximately twelve inches below the top edge of the DSC shell. Take swipes around the outer surface of the DSC shell and check for smearable contamination in accordance with the Technical Specification 5.2.4.d limits.

6. Prior to the start of welding operations, drain a minimum of 750 gallons of water from the DSC back into the fuel pool or other suitable location using the VDS or an optional liquid pump. Alternatively, all the water from the DSC may be drained if precautions are taken to keep the occupational exposure ALARA. Only helium may be used to assist in the removal of water.

7. Disconnect hose from the DSC siphon port.

8. Install the automatic welding machine onto the inner top cover plate and place the inner top cover plate with the automatic welding machine onto the DSC. Verify proper fit-up of the inner top cover plate with the DSC shell.

9. Check radiation levels along surface of the inner top cover plate. Temporary shielding may be installed as necessary to minimize personnel exposure.

   CAUTION: Insert a 1/4-inch flexible tubing of sufficient length and adequate temperature resistance through the vent port such that it terminates just below the DSC shield plug. Connect the flexible tubing to a hydrogen monitor to allow continuous monitoring of the hydrogen atmosphere in the DSC cavity during welding of the inner cover plate, *in compliance with Technical Specification 5.2.6.* Optionally, other methods may be used for continuous monitoring of the hydrogen atmosphere in the DSC cavity during welding of the inner top cover plate, *to comply with the Technical Specification.*

10. Cover the cask/DSC annulus to prevent debris and weld splatter from entering the annulus.

11. Ready the automatic welding machine and tack weld the inner top cover plate to the DSC shell. Install the inner top cover plate weldment and remove the automatic welding machine.

    CAUTION: Continuously monitor the hydrogen concentration in the DSC cavity using the flexible tube arrangement or other alternate methods described in Step 9 during the inner top cover plate cutting/welding operations. Verify that the measured hydrogen concentration does not exceed a safety limit of 2.4% [8.2 and 8.3]. If this limit is exceeded, stop all welding operations and purge the DSC cavity with approximately 2-3 psig helium (or any other inert medium) via the 1/4 inch flexible tubing to reduce the hydrogen concentration safely below the 2.4% limit.

12. Perform dye penetrant weld examination of the inner top cover plate weld in accordance with the Technical specification 5.2.4.b requirements.

13. Connect the VDS to the DSC siphon and vent ports.

14. Install temporary shielding to minimize personnel exposure throughout the subsequent welding operations as required.

15. Engage helium supply and open the valve on the vent port and allow helium to force the water from the DSC cavity through the siphon port.

16. Once the water stops flowing from the DSC, close the DSC siphon port and disengage the gas source.

17. Connect the hose from the vent port and the siphon port to the intake of the vacuum pump. Connect a hose from the discharge side of the VDS to the plant's radioactive waste system or spent fuel pool. Connect the VDS to a helium source.

18. Open the valve on the suction side of the pump, start the VDS and draw a vacuum on the DSC cavity. The cavity pressure should be reduced in steps of approximately 100 mm Hg, 50 mm Hg, 25 mm Hg, 15 mm Hg, 10 mm Hg, 5 mm Hg, and 3 mm Hg. After pumping down to each level, the pump is valved off and the cavity pressure monitored. The cavity pressure will rise as water and other volatiles in the cavity evaporate. When the cavity pressure stabilizes, the pump is valved in to complete the vacuum drying process. It may be necessary to repeat some steps, depending on the rate and extent of the pressure increase. Vacuum drying is complete when the pressure stabilizes for a minimum of 30 minutes at 3 mm Hg or less as specified in Technical Specification 3.1.1.

19. Open the valve to the vent port and allow the helium to flow into the DSC cavity.

20. Pressurize the DSC with helium to about 24 psia not to exceed 34 psia.

21. Helium leak test the inner top cover plate weld for a leak rate of 1 x 10-4 atm cm3 /sec. This test is optional.

22. If a leak is found, repair the weld, repressurize the DSC and repeat the helium leak test.

23. Once no leaks are detected, depressurize the DSC cavity by releasing the helium through the VDS to the plant's spent fuel pool or radioactive waste system.

24. Re-evacuate the DSC cavity using the VDS. The cavity pressure should be reduced in steps of approximately 10 mm Hg, 5 mm Hg, and 3 mm Hg. After pumping down to each level, the pump is valved off and the cavity pressure is monitored. When the cavity pressure stabilizes, the pump is valved in to continue the vacuum drying process. Vacuum drying is complete when the pressure stabilizes for a minimum of 30 minutes at 3 mm Hg or less in accordance with Technical Specification 3.1.1 limits.

25. Open the valve on the vent port and allow helium to flow into the DSC cavity to pressurize the DSC to about 17.2 psia in accordance with Technical Specification 3.1.2.b limits.

26. Close the valves on the helium source.

27. Decontaminate as necessary, and store.

grinding, and handling of potentially highly contaminated equipment. These are to include the use of prudent housekeeping measures and monitoring of airborne particulates. Procedures may require personnel to perform the work using respirators or supplied air.

If fuel needs to be removed from the DSC, either at the end of service life or for inspection after an accident, precautions must be taken against the potential for the presence of damaged or oxidized fuel and to prevent radiological exposure to personnel during this operation. A sampling of the atmosphere within the DSC will be taken prior to inspection or removal of fuel.

If the work is performed outside the fuel/reactor building, a tent may be constructed over the work area, which may be kept under a negative pressure to control airborne particulates. Any radioactive gas release will be Kr-85, which is not readily captured. Whether the krypton is vented through the plant stack or allowed to be released directly depends on the plant operating requirements.

Following opening of the DSC, the cask and DSC are filled with water prior to lowering the top of cask below the surface of the fuel pool to prevent a sudden inrush of pool water. Cask placement into the pool is performed in the usual manner. Fuel unloading procedures will be governed by the plant operating license under 10CFR50. The generic procedures for these operations are as follows:

15. Locate the DSC siphon and vent port using the indications on the top cover plate. Place a portable drill press on the top of the DSC. Position the drill with the siphon port.

16. Place an exhaust hood or tent over the DSC, if necessary. The exhaust should be filtered or routed to the site radwaste system.

17. Drill a hole through the DSC top cover plate to expose the siphon port quick connect.

18. Drill a second hole through the top cover plate to expose the vent port quick connect.

19. Obtain a sample of the DSC atmosphere, if necessary (e.g., at the end of service life). Fill the DSC with water from the fuel pool through the siphon port with the vent port open and routed to the plant's off-gas system.

    CAUTION:

    (a) The water fill rate must be regulated during this reflooding operation to ensure that the DSC vent pressure does not exceed 20.0 psig.

    (b) Provide for continuous hydrogen monitoring of the DSC cavity atmosphere during all subsequent cutting operations to ensure that a safety limit of 2.4% is not exceeded [8.2 and 8.3] *and in compliance with Technical Specification 5.2.6.* Drain appropriate amount of water from the DSC cavity before cutting operations to ensure that sufficient free volume exists in the DSC cavity for H_2 concentration limit. Purge with 2-3 psig helium (or any other inert medium) as necessary to maintain the hydrogen concentration safely below this limit.

20. Place welding blankets around the cask and scaffolding.

Table T.3.1-2
ASME Code Alternatives for the NUHOMS®-61BTH DSC Confinement Boundary

Reference ASME Code Section/Article	Code Requirement	Alternatives, Justification & Compensatory Measures
NCA	*All*	*Not compliant with NCA. Quality Assurance is provided according to 10 CFR 72 Subpart G in lieu of NCA-4000.*
NCA-1140	*Use of Code editions and addenda*	*Code edition and addenda other than those specified in Section 4.2.2 may be used for construction, but in no case earlier than 3 years before that specified in the Table.* *Materials produced and certified in accordance with ASME Section II material specification from Code Editions and Addenda other than those specified in Section 4.2.2 may be used, so long the materials meet all the requirements of Article 2000 of the applicable Subsection of the Section III Edition and Addenda used for construction.*
NB-1100	*Requirements for Code Stamping of Components, Code reports and certificates, etc.*	*Code Stamping is not required. As Code Stamping is not required, the fabricator is not required to hold an ASME "N" or "NPT" stamp, or to be ASME Certified.*
NB-1132	*Attachments with a pressure retaining function, including stiffeners, shall be considered part of the component.*	*Bottom shield plug and outer bottom cover plate are outside code jurisdiction; these components together are much larger than required to provide stiffening for the inner bottom cover plate; the weld that retains the outer bottom cover plate and with it the bottom shield plug is subject to root and final PT examination.*
NB-2130	*Material must be supplied by ASME approved material suppliers.*	*Material is certified to meet all ASME Code criteria but is not eligible for certification or Code Stamping if a non-ASME fabricator is used. As the fabricator is not required to be ASME certified, material certification to NB-2130 is not possible. Material traceability and certification are maintained in accordance with TN's NRC approved QA program.*
NB-4121	*Material Certification by Certificate Holder*	
NB-4243 and NB-5230	Category C weld joints in vessels and similar weld joints in other components shall be full penetration joints. These welds shall be examined by UT or RT and either PT or MT.	The shell to the outer top cover weld, the shell to the inner top cover/weld, the siphon/vent cover welds and the vent and siphon block welds to the shell are all partial penetration welds. As an alternative to the NDE requirements of NB-5230 for Category C welds, all of these closure welds will be multi-layer welds and receive a root and final PT examination, except for the shell to the outer top cover weld. The shell to the outer top cover weld will be a multi-layer weld and receive multi-level PT examination in accordance with the guidance provided in ISG-15 for NDE. The multi-level PT Examination provides reasonable assurance that flaws of interest will be identified. The PT examination is done by qualified personnel, in accordance with Section V and the acceptance standards of Section III, Subsection NB-5000. All of these welds will be designed to meet the guidance provided in ISG-15 for stress reduction factor.

Table T.3.1-2
ASME Code Alternatives for the NUHOMS®-61BTH DSC Confinement Boundary (Concluded)

Reference ASME Code Section/Article	Code Requirement	Alternatives, Justification & Compensatory Measures
NB-6100 and 6200	All completed pressure retaining systems shall be pressure tested	The 61BTH is not a complete or "installed" pressure vessel until the top closure is welded following placement of Fuel Assemblies with the DSC. Due to the inaccessibility of the shell and lower end closure welds following fuel loading and top closure welding, as an alternative, the pressure testing of the DSC is performed in two parts. The DSC shell (including all longitudinal and circumferential welds) is pressure tested and examined at the fabrication facility. The shell to the inner top cover closure weld are pressure tested and examined for leakage in accordance with NB-6300 in the field. The siphon/vent cover welds are not pressure tested; these welds and the shell to the inner top cover closure weld are helium leak tested after the pressure test. Per NB-6324 the examination for leakage shall be done at a pressure equal to the greater of the design pressure or three-fourths of the test pressure. As an alternative, if the examination for leakage of these field welds, following the pressure test, is performed using helium leak detection techniques, the examination pressure may be reduced to ≥ 1.5 psig. This is acceptable given the significantly greater sensitivity of the helium leak detection method.
NB-7000	*Overpressure Protection*	*No overpressure protection is provided for the NUHOMS® DSCs. The function of the DSC is to contain radioactive materials under normal, off-normal and hypothetical accident conditions postulated to occur during transportation and storage. The DSC is designed to withstand the maximum possible internal pressure considering 100% fuel rod failure at maximum accident temperature.*
NB-8000	*Requirements for nameplates, stamping & reports per NCA-8000*	*The NUHOMS® DSC nameplate provides the information required by 10CFR71, 49CFR173 and 10CFR72 as appropriate. Code stamping is not required for the DSC. QA data packages are prepared in accordance with the requirements of TN's approved QA program.*

Table T.3.1-3
ASME Code Alternatives for the NUHOMS®-61BTH DSC Basket

Reference ASME Code Section/Article	Code Requirement	Alternatives, Justification & Compensatory Measures
NCA	*All*	*Not compliant with NCA. Quality Assurance is provided according to 10 CFR 72 Subpart G in lieu of NCA-4000.*
NCA-1140	*Use of Code editions and addenda*	*Code edition and addenda other than those specified in Section 4.2.2 may be used for construction, but in no case earlier than 3 years before that specified in the Table.* *Materials produced and certified in accordance with ASME Section II material specification from Code Editions and Addenda other than those specified in Section 4.2.2 may be used, so long the materials meet all the requirements of Article 2000 of the applicable Subsection of the Section III Edition and Addenda used for construction.*
NG-1100	*Requirements for Code Stamping of Components, Code reports and certificates, etc.*	*Code Stamping is not required. As Code Stamping is not required, the fabricator is not required to hold an ASME "N" or "NPT" stamp, or to be ASME Certified.*
NG-2000	Use of ASME Material	*Some baskets include neutron absorber and aluminum plates that are not ASME Code Class 1 material. They are used for criticality safety and heat transfer, and are only credited in the structural analysis with supporting their own weight and transmitting bearing loads through their thickness.* Material properties in the ASME Code for Type 6061 aluminum are limited to 400°F to preclude the potential for annealing out the hardening properties. Annealed properties (as published by the Aluminum Association and the American Society of Metals) are conservatively assumed for the aluminum transition rails for use above the Code temperature limits.
NG/NF-2130	Material must be supplied by ASME approved material suppliers.	Material is certified to meet all ASME Code criteria but is not eligible for certification or Code Stamping if a non-ASME fabricator is used. As the fabricator is not required to be ASME certified, material certification to NB-2130 is not possible. Material traceability and certification are maintained in accordance with TN's NRC approved QA program.
NG/NF-4121	Material Certification by Certificate Holder	
NG-3352	Table NG 3352-1 lists the permissible welded joints and quality factors.	The fuel compartment tubes may be fabricated from sheet with full penetration seam weldments. Per Table NG-3352-1 a joint efficiency (quality) factor of 0.5 is to be used for full penetration weldments examined in accordance with ASME Section V visual examination (VT). A joint efficiency (quality) factor of 1.0 is utilized for the fuel compartment longitudinal seam welds (if present) with VT examination. This is justified because the compartment seam weld is thin and the weldment is made in one pass; and both surfaces of the weldment (inside and outside) receive 100% VT examination. The 0.5 quality factor, applicable to each surface of the weldment, results is a quality factor of 1.0 since both surfaces are 100% examined. In addition,the fuel compartments have no pressure retaining function and the stainless steel material that comprises the fuel compartment tubes is very ductile.
NG -8000	*Requirements for nameplates, stamping & reports per NCA-8000*	*The NUHOMS® DSC nameplate provides the information required by 10CFR71, 49CFR173 and 10CFR72 as appropriate. Code stamping is not required for the DSC. QA data packages are prepared in accordance with the requirements of TN's approved QA program.*

T.8 Operating Systems

This Chapter presents the operating procedures for the standardized NUHOMS®-61BTH system described in previous chapters and shown on the drawings in Section T.1.5. The procedures include preparation of the DSC and fuel loading, closure of the DSC, transport to the ISFSI, DSC transfer into the HSM, monitoring operations, and DSC retrieval from the HSM. The standardized NUHOMS® transfer equipment, and the existing plant systems and equipment are used to accomplish these operations. Procedures are delineated here to describe how these operations are to be performed and are not intended to be limiting. Standard fuel and cask handling operations performed under the plant's 10CFR50 operating license are described in less detail. Existing operational procedures may be revised by the licensee and new ones may be developed according to the requirements of the plant, provided that the limiting conditions of operation specified in Technical Specifications, Functional and Operating Limits of the NUHOMS® CoC are not exceeded.

The following sections outline the typical operating procedures for the standardized NUHOMS® system. These generic NUHOMS® procedures have been developed to minimize the amount of time required to complete the subject operations, to minimize personnel exposure, and to assure that all operations required for DSC loading, closure, transfer, and storage are performed safely. Plant specific ISFSI procedures are to be developed by each licensee in accordance with the requirements of 10CFR72.24 (h) and the guidance of Regulatory Guide 3.61 [8.1]. The generic procedures presented here are provided as a guide for the preparation of plant specific procedures and serve to point out how the NUHOMS® system operations are to be accomplished. They are not intended to be limiting, in that the licensee may judge that alternate acceptable means are available to accomplish the same operational objective.

Process flow diagrams for the NUHOMS® system operation are presented *Figure T.8.1-1* and *Figure T.8.2-1*. The location of the various operations may vary with individual plant requirements. The following steps describe the recommended generic operating procedures for the standardized NUHOMS® system.

Note: The generic terms used throughout this section are as follows, depending on the system configuration. See Chapter T.1 for a description of the components.

- Transfer Cask (TC) may be either a NUHOMS® OS197/OS197H or OS197FC-B,
- DSC may be a NUHOMS® 61BTH Type 1 or Type 2, and
- HSM may be a NUHOMS® HSM-H or a standardized NUHOMS® HSM (Model 80, Model 102, Model 152, or Model 202).

11. a. For DSCs with removable hold down rings, test fit the hold down ring into the canister. Examine the hold down ring to ensure a proper fit. Remove hold down ring. (Note this step may be completed earlier and hold down ring may be left in place while testing the top shield plug fit-up.)

    b. Place the top shield plug onto the DSC. Examine the top shield plug to ensure a proper fit. If using the rigging cables under the yoke to install the shield plug, attach the rigging cables to the shield plug and adjust the rigging cables as necessary to obtain even cable tension. Remove top shield plug and hold down ring, if present. (Note this step may be complete earlier.)

12. Position the cask lifting yoke above the transfer cask and engage the cask lifting trunnions.

13. Visually inspect the yoke lifting hooks to insure that they are properly positioned and engaged on the cask lifting trunnions.

14. Provide for later connection to a water draining/pumping device to the siphon port of the DSC and position any connecting hose such that the hose will not interfere with loading (yoke, fuel, shield plug, rigging, etc.). A flowmeter or other suitable means for measuring the amount of water removed must be provided for at a suitable location as part of this connection.

15. Move the scaffolding away from the cask as necessary.

16. Lift the cask just far enough to allow the weight of the cask to be distributed onto the yoke lifting hooks. Reinspect the lifting hooks to insure that they are properly positioned on the cask trunnions.

17. a. Optionally, secure a sheet of suitable material to the bottom of the transfer cask to minimize the potential for ground-in contamination. This may also be done prior to initial placement of the cask in the decon area.

    b. Fill the TC liquid neutron shield as required by licensee ALARA requirements and crane capacity limits. This step may be completed at any time prior to immersion of the TC/DSC into the pool.

18. Prior to the cask being lowered into the fuel pool, the water level in the pool should be adjusted as necessary to accommodate the TC/DSC volume. If the water placed in the DSC cavity was obtained from the fuel pool, a level adjustment may not be necessary.

T.8.1.2 <u>DSC Fuel Loading</u>

1. Lift the TC/DSC and position it over the cask loading area of the spent fuel pool in accordance with the plant's 10CFR50 cask handling procedures.

b. Position the lifting yoke and the top shield plug and lower the shield plug into the DSC. Note that separate rigging may be used to install the shield plug prior to engaging the trunnions with the lifting yoke.

CAUTION: Verify that all the lifting height restrictions as a function of temperature specified in Technical Specification 5.3.1.A can be met in the following steps which involve lifting of the transfer cask.

9. Visually verify that the top shield plug is properly seated within the DSC.

10. Position the lifting yoke with the cask trunnions and verify that it is properly engaged.

11. Raise the transfer cask to the pool surface. Prior to raising the top of the cask above the water surface, stop vertical movement.

12. Inspect the top shield plug to verify that it is properly seated within the DSC. If not, lower the cask and reposition the top shield plug and or remove the shield plug and reposition the hold down ring. Repeat Steps 8 through 12 as necessary.

13. Continue to raise the cask from the pool and spray the exposed portion of the cask with water until the top region of the cask is accessible.

14. Drain any excess water from the top of the DSC shield plug back to the fuel pool. Check the radiation levels at the center of top shield plug and around the perimeter of the cask. Disconnect the top shield plug rigging.

15. Drain a minimum of 50 gallons of water. Optionally approximately 1100 gallons of water (as indicated on the flow meter) may be drained from the DSC back into the fuel pool or other suitable location to meet the weight limit on the crane. Use 1-3 psig of helium to backfill the DSC with an inert gas per ISG-22 [8.2] guidance as water is being removed from the DSC.

16. Lift the cask from the fuel pool. As the cask is raised from the pool, continue to spray the cask with water and decon as directed. *Provisions should be made to assure that air will not enter the DSC cavity. This may be achieved by replenishing the helium in the DSC cavity during cask movement from fuel pool to the decon area in case of malfunction of equipments used for cask movement.*

17. Move the cask with loaded DSC to the cask decon area.

17A. If option of draining approximately 1100 gallons of water in Step 15 was selected then refill the DSC cavity back slowly with approximately the same amount of water from the fuel pool or an equivalent source.

18. Install cask seismic restraints if required by Technical Specification 4.3.3.7 (required only on plant specific basis).

19. Verify that the transfer cask dose rates are compliant with limits specified in Technical Specification 5.2.4.

T.8.1.3 DSC Drying and Backfilling

CAUTION: During performance of steps listed in Section T.8.1.3, monitor the TC/DSC annulus water level and replenish as necessary until drained.

1. Check the radiation levels along the perimeter of the cask. The cask exterior surface should be decontaminated as necessary in accordance with the limits specified in Technical Specification 5.2.4.d. Temporary shielding may be installed as necessary to minimize personnel exposure.

2. Place scaffolding around the cask so that any point on the surface of the cask is easily accessible to personnel.

3. Disengage the rigging cables from the top shield plug and remove the eyebolts. Disengage the lifting yoke from the trunnions and position it clear of the cask.

4. Decontaminate the exposed surfaces of the DSC shell perimeter and remove the inflatable TC/DSC annulus seal.

5. Connect the cask drain line to the cask, open the cask cavity drain port and allow water from the annulus to drain out until the water level is approximately twelve inches below the top edge of the DSC shell. Take swipes around the outer surface of the DSC shell and check for smearable contamination in accordance with the Technical Specification 5.2.4.d limits.

   CAUTION: Radiation dose rates are expected to be high at the vent and siphon port locations. Use proper ALARA practices (e.g., use of temporary shielding, appropriate positioning of personnel, etc.) to minimize personnel exposure.

6. Drain approximately 1100 gallons of water (as indicated on a flowmeter) from the DSC back into the fuel pool or other suitable location if not drained in Step 8.1.2.15. Consistent with ISG-22 [8.2] guidance, helium at 1-3 psig is used to backfill the DSC with an inert gas (helium) as water is being removed from the DSC.

7. Monitor TC/DSC annulus water level and replenish as necessary until drained.

8. Install the automatic welding machine onto the inner top cover plate and place the inner top cover plate with the automatic welding machine onto the DSC. Optionally, the inner top cover plate and the automatic welding machine can be placed separately. Verify proper fit-up of the inner top cover plate with the DSC shell.

9. Check radiation levels along the surface of the inner top cover plate. Temporary shielding may be installed as necessary to minimize personnel exposure.

10. Insert approximately ¼ inch tubing of sufficient length and adequate temperature resistance through the vent port such that it terminates just below the DSC top shield plug. Connect the tubing to a hydrogen monitor to allow continuous monitoring of the hydrogen atmosphere in the DSC cavity during welding of the inner top cover plate, *in compliance with Technical Specification 5.2.6.*

11. Cover the TC/DSC annulus to prevent debris and weld splatter from entering the annulus.

12. Ready the automatic welding machine and tack weld the inner top cover plate to the DSC shell. Install the inner top cover plate weldment and remove the automatic welding machine.

    CAUTION: Continuously monitor the hydrogen concentration in the DSC cavity using the arrangement or other alternate methods described in step 10 during the inner top cover plate cutting/welding operations. Verify that the measured hydrogen concentration does not exceed a safety limit of 2.4% [8.3 and 8.4]. If this limit is exceeded, stop all welding operations and purge the DSC cavity with 2-3 psig helium via the tubing to reduce the hydrogen concentration safely below the 2.4% limit.

13. Perform dye penetrant weld examination of the inner top cover plate weld in accordance with the Technical Specification 5.2.4.b requirements.

14. If loading a Type 2 61BTH DSC or if using a suction pump rather than blowdown to remove water, skip to step 16; otherwise, place the strongback so that it sits on the inner top cover plate and is oriented such that:

    - The DSC siphon and vent ports are accessible
    - The strongback stud holes line up with the TC lid bolt holes

15. Lubricate the studs and, using a crossing pattern, adjust the strongback studs to snug tight ensuring approximately even pressure on the cover plate.

16. Remove purge lines and connect the VDS to the DSC siphon and vent ports.

17. Install temporary shielding to minimize personnel exposure throughout the subsequent welding operations as required.

18. a. If using blowdown method to remove water, engage helium supply (up to 10 psig for Type 1 DSC or 15 psig for Type 2 DSC) and open the valve on the vent port and allow helium to force the water from the DSC cavity through the siphon port.

    b. If using water pump to remove water without blowdown pump water from DSC.

19. Once the water stops flowing from the DSC, close the DSC siphon port and disengage the gas source or turn off the suction pump, as applicable.

20. Connect the hose from the vent port and the siphon port to the intake of the vacuum pump. Connect a hose from the discharge side of the VDS to the plant's radioactive waste system or spent fuel pool. Connect the VDS to a helium source.

    NOTE: Proceed cautiously when evacuating the DSC to avoid freezing consequences.

21. Open the valve on the suction side of the pump, start the VDS and draw a vacuum on the DSC cavity. The cavity pressure should be reduced in steps of approximately 100 mm Hg, 50 mm Hg, 25 mm Hg, 15 mm Hg, 10 mm Hg, 5 mm Hg, and 3 mm Hg. After pumping down to each level (these levels are optional), the pump is valved off and the cavity

pressure monitored. The cavity pressure will rise as water and other volatiles in the cavity evaporate. When the cavity pressure stabilizes, the pump is valved in to complete the vacuum drying process. It may be necessary to repeat some steps, depending on the rate and extent of the pressure increase. Vacuum drying is complete when the pressure stabilizes for a minimum of 30 minutes at 3 mm Hg or less as specified in Technical Specification 3.1.1.

CAUTION: Radiation dose rates are expected to be high at the vent and siphon port locations. Use proper ALARA practices (e.g., use of temporary shielding, appropriate positioning of personnel, etc.) to minimize personnel exposure.

22. Open the valve to the vent port and allow the helium to flow into the DSC cavity.

23. Pressurize the DSC with helium (up to 10 psig for Type 1 DSC or 15 psig for Type 2 DSC).

24. Helium leak test the inner top cover plate weld for a leak rate of 1×10^{-4} atm cm^3/sec. This test is optional.

25. If a leak is found, repair the weld, repressurize the DSC and repeat the helium leak test.

26. Once no leaks are detected, depressurize the DSC cavity by releasing the helium through the VDS to the plant's spent fuel pool or radioactive waste system.

27. Re-evacuate the DSC cavity using the VDS. The cavity pressure should be reduced in steps of approximately 10 mm Hg, 5 mm Hg, and 3 mm Hg. After pumping down to each level, the pump is valved off and the cavity pressure is monitored (these levels are optional). When the cavity pressure stabilizes, the pump is valved in to continue the vacuum drying process. Vacuum drying is complete when the pressure stabilizes for a minimum of 30 minutes at 3 mm Hg or less in accordance with Technical Specification 3.1.1 limits.

28. Open the valve on the vent port and allow helium to flow into the DSC cavity to pressurize the DSC *between 14.5 to 16.0 psig for 61BTH Type 1 and 18.5 to 20.0 psig for 61BTH Type 2* and hold for 10 minutes. Depressurize the DSC cavity by releasing the helium through the VDS to the plant spent fuel pool or radioactive waste system to about 2.5 psig in accordance with Technical Specification 3.1.2.b limits.

    CAUTION: Radiation dose rates are expected to be high at the vent and siphon port locations. Use proper ALARA practices (e.g., use of temporary shielding, appropriate positioning of personnel, etc.) to minimize personnel exposure.

29. Close the valves on the helium source.

30. Remove the strongback, if installed in step 14 above, decontaminate as necessary, and store.

T.8.1.4 DSC Sealing Operations

CAUTION: During performance of steps listed in Section T.8.1.4, monitor the cask/DSC annulus water level and replenish as necessary to maintain cooling.

1. Disconnect the VDS from the DSC. Seal weld the prefabricated plugs over the vent and siphon ports. Inject helium into blind space just prior to completing welding and perform a dye penetrant weld examination in accordance with the Technical Specification 5.2.4.b requirements.

2. Temporary shielding may be installed as necessary to minimize personnel exposure. Install the automatic welding machine onto the outer top cover plate and place the outer top cover plate with the automatic welding system onto the DSC. Optionally, outer top cover plate may be installed separately from the welding machine. Verify proper fit up of the outer top cover plate with the DSC shell.

3. Tack weld the outer top cover plate to the DSC shell. Place the outer top cover plate weld root pass.

4. Helium leak test the inner top cover plate and vent/siphon port plate welds using the leak test port in the outer top cover plate in accordance with Technical Specification 5.2.4.c limits. Verify that the personnel performing the leak test are qualified in accordance with SNT-TC-1A [8.5]. Alternatively, this can be done with a test head in step 1 of Section T.8.1.4.

5. If a leak is found, remove the outer cover plate root pass (if not using test head), the vent and siphon port plugs and repair the inner cover plate welds. Then install the strongback (if used) and repeat procedure steps from T.8.1.3 step 21.

6. Perform dye penetrant examination of the root pass weld. Weld out the outer top cover plate to the DSC shell and perform dye penetrant examination on the weld surface in accordance with the Technical Specification 5.2.4.b requirements.

7. Install and seal weld the prefabricated plug, if applicable, over the outer cover plate test port and perform dye penetrant weld examinations in accordance with Technical Specification 5.2.4.b requirements.

8. Remove the automatic welding machine from the DSC.

9. Open the cask drain port valve and drain the water from the cask/DSC annulus.

10. Rig the cask top cover plate and lower the cover plate onto the transfer cask.

11. Bolt the cask cover plate into place, tightening the bolts to the required torque in a star pattern.

    CAUTION: Monitor the applicable time limits of Technical Specification 3.1.3 until the completion of DSC transfer step 6 of Section T.8.1.6, if loading Type 2 61BTH DSC.

T.8.1.5 <u>Transfer Cask Downending and Transport to ISFSI</u>

NOTE:

16. Disengage the ram grapple mechanism so that the grapple is retracted away from the DSC grapple ring.

17. Retract and disengage the hydraulic ram system from the cask and move it clear of the cask. Remove the cask restraints from the HSM.

18. Using the skid positioning system, disengage the cask from the HSM access opening. Insert the DSC axial retainer.

19. Install the HSM door using a portable crane and secure it in place. Door may be welded for security. Verify that the HSM dose rates are compliant with the limits specified in Technical Specification 5.4.2.

20. Replace the transfer cask top cover plate. Secure the skid to the trailer, retract the vertical jacks and disconnect the skid positioning system.

21. Tow the trailer and cask to the designated equipment storage area. Return the remaining transfer equipment to the storage area.

22. Close and lock the ISFSI access gate and activate the ISFSI security measures.

23. *Ensure the HSM-H maximum air exit temperature requirements of Technical Specification 3.1.4 are met.*

T.8.1.7 Monitoring Operations

1. Perform routine security surveillance in accordance with the licensee's ISFSI security plan.

2. Perform one of the two alternate daily surveillance activities listed below:

   a. A daily visual surveillance of the HSM air inlets and outlets to insure that no debris is obstructing the HSM vents in accordance with Technical Specification 5.2.5.a requirements.

   b. A temperature measurement of the thermal performance, for each HSM, on a daily basis in accordance with Technical Specification 5.2.5.b requirements.

T.9.1.7.5 Specification for Acceptance Testing of Neutron Absorbers by Neutron Transmission

CAUTION

Section T.9.1.7.5 is incorporated by reference into the NUHOMS® CoC 1004 Technical Specification 4.1 (Note 2) and shall not be deleted or altered in any way without a CoC amendment approval from the NRC. The text of this section is shown in bold type to distinguish it from other sections.

Neutron Transmission acceptance testing procedures shall be subject to approval by the Certificate Holder. Test coupons shall be removed from the rolled or extruded production material at locations that are systematically or probabilistically distributed throughout the lot. Test coupons shall not exhibit physical defects that would not be acceptable in the finished product, or that would preclude an accurate measurement of the coupon's physical thickness.

A lot is defined as all the pieces produced from a single ingot or heat *or from a group of billets from the same heat.* If this definition results in lot size too small to provide a meaningful statistical analysis of results, an alternate larger lot definition may be used, so long as it results in accumulating material that is uniform for sampling purposes.

The sampling rate for neutron transmission measurements shall be such that there is at least one neutron transmission measurement for each 2000 square inches of final product in each lot.

The B10 areal density is measured using a collimated thermal neutron beam of up to 1.2 centimeter diameter. A beam size greater than 1.2 centimeter diameter but no larger than 1.7 centimeter diameter may be used if computations are performed to demonstrate that the calculated $k_{effective}$ of the system is still below the calculated Upper Subcritical Limit (USL) of the system assuming defect areas the same area as the beam.

The neutron transmission through the test coupons is converted to B10 areal density by comparison with transmission through calibrated standards. These standards are composed of a homogeneous boron compound without other significant neutron absorbers. For example, boron carbide, zirconium diboride or titanium diboride sheets are acceptable standards. These standards are paired with aluminum shims sized to match the effect of neutron scattering by aluminum in the test coupons. Uniform but non-homogeneous materials such as metal matrix composites may be used for standards, provided that testing shows them to provide neutron attenuation equivalent to a homogeneous standard.

Alternatively, digital image analysis may be used to compare neutron radioscopic images of the test coupon to images of the standards. The area of image analysis shall be up to 1.1 cm^2. *The method shall demonstrate sufficient sensitivity to distinguish between areal density at the specified minimum, and 1% above and below the minimum.*

Table U.3.1-1
Alternatives to the ASME Code for the NUHOMS® 32PTH1 DSC Confinement Boundary

Reference ASME Code Section/Article	Code Requirement	Alternatives, Justification & Compensatory Measures
NCA	*All*	*Not compliant with NCA. Quality Assurance is provided according to 10 CFR 72 Subpart G in lieu of NCA-4000.*
NCA-1140	*Use of Code editions and addenda*	*Code edition and addenda other than those specified in Section 4.2.2 may be used for construction, but in no case earlier than 3 years before that specified in the Table.* *Materials produced and certified in accordance with ASME Section II material specification from Code Editions and Addenda other than those specified in Section 4.2.2 may be used, so long the materials meet all the requirements of Article 2000 of the applicable Subsection of the Section III Edition and Addenda used for construction.*
NB-1100	*Requirements for Code Stamping of Components, Code reports and certificates, etc.*	*Code Stamping is not required. As Code Stamping is not required, the fabricator is not required to hold an ASME "N" or "NPT" stamp, or to be ASME Certified.*
NB-2130	Material must be supplied by ASME approved material suppliers.	Material is certified to meet all ASME Code criteria but is not eligible for certification or Code Stamping if a non-ASME fabricator is used. As the fabricator is not required to be ASME certified, material certification to NB-2130 is not possible. Material traceability and certification are maintained in accordance with TN's NRC approved QA program.
NB-4121	Material Certification by Certificate Holder	
NB-4243 and NB-5230	Category C weld joints in vessels and similar weld joints in other components shall be full penetration joints. These welds shall be examined by UT or RT and either PT or MT	The shell to the outer top cover weld, the shell to the inner top cover/shield plug weld (including optional design configurations for the inner top cover as described in the 32PTH1 DSC drawings), the siphon/vent cover welds, and the vent and siphon block welds to the shell are all partial penetration welds. As an alternative to the NDE requirements of NB-5230, for Category C welds, all of these closure welds are multi-layer welds and receive a root and final PT examination, except for the shell to the outer top cover weld. The shell to the outer top cover weld will be a multi-layer weld and receive multi-level PT examination in accordance with the guidance provided in ISG-15 for NDE. The multi-level PT examination provides reasonable assurance that flaws of interest will be identified. The PT examination is done by qualified personnel, in accordance with Section V and the acceptance standards of Section III, Subsection NB-5000. All of these welds are designed to meet the guidance provided in ISG-15 for stress reduction factor.
NB-1132	*Attachments with a pressure retaining function, including stiffeners, shall be considered part of the component.*	*Bottom shield plug and outer bottom cover plate are outside code jurisdiction; these components together are much larger than required to provide stiffening for the inner bottom cover plate; the weld that retains the outer bottom cover plate and with it the bottom shield plug is subject to root and final PT examination.*

Table U.3.1-1
Alternatives to the ASME Code for the NUHOMS® 32PTH1 DSC Confinement Boundary
(Concluded)

Reference ASME Code Section/Article	Code Requirement	Alternatives, Justification & Compensatory Measures
NB-6100 and 6200	All pressure retaining components and completed systems shall be pressure tested. The preferred method shall be hydrostatic test.	The NUHOMS® 32PTH1 DSC is not a complete vessel until the top closure is welded following placement of fuel assemblies within the DSC. Due to the inaccessibility of the shell and lower end closure welds following fuel loading and top closure welding, as an alternative, the pressure testing of the DSC is performed in two parts. The DSC shell and inner bottom plate/forging (including all longitudinal and circumferential welds), are pressure tested and examined at the fabrication facility. The shell to the inner top cover/shield plug closure weld (including optional design configurations for the inner top cover as described in the 32PTH1 DSC drawings) is pressure tested and examined for leakage in accordance with NB-6300 in the field. The siphon/vent cover welds are not pressure tested; these welds and the shell to the inner top cover/shield plug closure weld (including Optional design configurations for the inner top cover as described in the 32PTH1 DSC drawings) are helium leak tested after the pressure test. Per NB-6324 the examination for leakage shall be done at a pressure equal to the greater of the design pressure or three-fourths of the test pressure. As an alternative, if the examination for leakage of these field welds, following the pressure test, is performed using helium leak detection techniques, the examination pressure may be reduced to ≥1.5 psig. This is acceptable given the significantly greater sensitivity of the helium leak detection method.
NB-7000	*Overpressure Protection*	*No overpressure protection is provided for the NUHOMS® DSCs. The function of the DSC is to contain radioactive materials under normal, off-normal and hypothetical accident conditions postulated to occur during transportation and storage. The DSC is designed to withstand the maximum possible internal pressure considering 100% fuel rod failure at maximum accident temperature.*
NB-8000	*Requirements for nameplates, stamping & reports per NCA-8000*	*The NUHOMS® DSC nameplate provides the information required by 10CFR71, 49CFR173 and 10CFR72 as appropriate. Code stamping is not required for the DSC. QA data packages are prepared in accordance with the requirements of TN's approved QA program.*
NB-5000	*NDE Personnel must be qualified to edition of SNT-TC-1A*	*Permit use of more recent edition of SNT-TC-1A.*

Table U.3.1-2
Alternatives to the ASME Code for the NUHOMS® 32PTH1 DSC Basket Assembly

Reference ASME Code Section/Article	*Code Requirement*	*Alternatives, Justification & Compensatory Measures*
NCA	*All*	*Not compliant with NCA. Quality Assurance is provided according to 10 CFR 72 Subpart G in lieu of NCA-4000.*
NCA-1140	*Use of Code editions and addenda*	*Code edition and addenda other than those specified in Section 4.2.2 may be used for construction, but in no case earlier than 3 years before that specified in the Table.* *Materials produced and certified in accordance with ASME Section II material specification from Code Editions and Addenda other than those specified in Section 4.2.2 may be used, so long the materials meet all the requirements of Article 2000 of the applicable Subsection of the Section III Edition and Addenda used for construction.*
NG/NF-1100	*Requirements for Code Stamping of Components, Code reports and certificates, etc.*	*Code Stamping is not required. As Code Stamping is not required, the fabricator is not required to hold an ASME "N" or "NPT" stamp, or to be ASME Certified.*
NG-2000	Use of ASME Material	Some baskets include neutron absorber and aluminum plates that are not ASME Code Class 1 material. They are used for criticality safety and heat transfer, and are only credited in the structural analysis with supporting their own weight and transmitting bearing loads through their thickness. Material properties in the ASME Code for Type 6061 aluminum are limited to 400°F to preclude the potential for annealing out the hardening properties. Annealed properties (as published by the Aluminum Association and the American Society of Metals) are conservatively assumed for the aluminum transition rails for use above the Code temperature limits.
NG/NF-2130	*Material must be supplied by ASME approved material suppliers.*	*Material is certified to meet all ASME Code criteria but is not eligible for certification or Code Stamping if a non-ASME fabricator is used. As the fabricator is not required to be ASME certified, material certification to NB-2130 is not possible. Material traceability and certification are maintained in accordance with TN's NRC approved QA program.*
NG/NF-4121	*Material Certification by Certificate Holder*	
NG-8000	*Requirements for nameplates, stamping & reports per NCA-8000*	*The NUHOMS® DSC nameplate provides the information required by 10CFR71, 49CFR173 and 10CFR72 as appropriate. Code stamping is not required for the DSC. QA data packages are prepared in accordance with the requirements of TN's approved QA program.*
NG-3000/ Section II, Part D, Table 2A	Maximum temperature limit for Type 304 plate material is 800°F.	Not compliant with ASME Section II Part D Table 2A material temperature limit for Type 304 steel for the postulated transfer accident case (117°F, loss of sunshade, loss of neutron shield) and blocked vent accident (117°F, 40 hr). The calculated maximum steady state temperatures for transfer accident case and blocked vent accident case are less than 1000°F. The only primary stresses in the basket grid are deadweight stresses. The ASME Code allows use of SA240 Type 304 stainless steel to temperatures up to 1000°F, as shown in ASME Code, Section II, Part D, Table 1A. In the temperature range of interest (near 800°F), the S_m values for SA240 Type 304 shown in ASME Code, Section II Part D, Table 2A are identical to the allowable S values for the same material shown in Section B, Part D, Table 1A. The recovery actions following these accident scenarios are as described in the UFSAR.

Table U.3.1-2
Alternatives to the ASME Code for the NUHOMS® 32PTH1 DSC Basket Assembly
(Concluded)

Reference ASME Code Section/Article	Code Requirement	Alternatives, Justification & Compensatory Measures
NG-3352	Table NG 3352-1 lists the permissible welded joints.	The fusion welds between the stainless steel insert plates and the stainless fuel compartment tube are not included in Table NG-3352-1. These welds are qualified by testing. The required minimum tested capacity of the welded connection (at each side of the tube) shall be 45 kips (at room temperature). The capacity shall be demonstrated by qualification and production testing. Testing shall be performed using, or corrected to, the lowest tensile strength of material used in the basket assembly or to minimum specified tensile strength. Testing may be performed on individual welds, or on weld patterns representative of one wall of the tube. ASME Code Section IX does not provide tests for qualification of these type of welds. Therefore, these welds are qualified using Section IX to the degree applicable together with the testing described here. The welds will be visually inspected to confirm that they are located over the insert plates, in lieu of the visual acceptance criteria of NG-5260 which are not appropriate for this type of weld.
		A joint efficiency (quality) factor of 1.0 is utilized for the fuel compartment longitudinal seam welds. Table NG-3352-1 permits a joint efficiency (quality) factor of 0.5 to be used for full penetration weld examined by ASME Section V visual examination (VT). For the 32PTH1 DSC, the compartment seam weld is thin and the weld will be made in one pass. Both surfaces of weld (inside and outside) will be fully examined by VT and therefore a factor of 2 x 0.5=1.0, will be used in the analysis. This is justified as both surfaces of the single weld pass/layer will be fully examined, and the stainless steel material that comprises the fuel compartment tubes is very ductile.

10. Position the lifting yoke with the TC trunnions and verify that it is properly engaged.

11. Raise the TC to the pool surface. Prior to raising the top of the cask above the water surface, stop vertical movement.

12. Inspect the top shield plug to verify that it is properly seated onto the DSC. If not, lower the cask and reposition the top shield plug. Repeat Steps 8 through 12 as necessary.

13. Continue to raise the TC from the pool and spray the exposed portion of the cask with water until the top region of the cask is accessible.

14. Drain any excess water from the top of the DSC shield plug back to the fuel pool.

15. Check the radiation levels at the center of the top shield plug and around the perimeter of the cask. Disconnect the top shield plug rigging.

16. Drain a minimum of 50 gallons of water from the DSC cavity. Optionally, approximately 900 gallons of water (as indicated by the flowmeter) may be drained from the DSC back into the pool or other suitable location to meet the weight limit on the crane. Use 1 to 3 psig of helium to backfill the DSC with helium per ISG-22 [8.5] guidance as water is being removed from the DSC cavity.

17. Lift the TC from the fuel pool. As the cask is raised from the pool, continue to spray the cask with water and decon as directed. *Provisions should be made to assure that air will not enter the DSC cavity. This may be achieved by replenishing the helium in the DSC cavity during cask movement from fuel pool to the decon area in case of malfunction of equipment used for cask movement.*

18. Move the TC with loaded DSC to the cask decon area.

18A. If option of draining approximately 900 gallons of water in step 16 was selected, then refill the DSC cavity back slowly with approximately the same amount of water from the fuel pool or an equivalent source which meets the requirements of Technical Specification 3.2.1.

19. If applicable to keep the occupational exposure ALARA, temporary shielding may be installed as necessary to minimize personnel exposure. Install cask seismic restraints if required by Technical Specification 4.3.3 (required only on plant specific basis).

20. Verify that the transfer cask dose rates are compliant with limits specified in Technical Specification 5.2.4.

U.8.1.3 DSC Drying and Backfilling

CAUTION: During performance of steps listed in Section U.8.1.3, monitor the TC/DSC annulus water level and replenish if necessary until drained.

1. Check the radiation levels along the perimeter of the cask. The cask exterior surface should be decontaminated as necessary in accordance with the limits specified in Technical Specification 5.2.4.d. Temporary shielding may be installed as necessary to minimize personnel exposure.

2. Place scaffolding around the cask so that any point on the surface of the cask is easily accessible to personnel.

3. Disengage the rigging cables from the top shield plug and remove the eyebolts. Disengage the lifting yoke from the trunnions and position it clear of the cask.

4. Decontaminate the exposed surfaces of the DSC shell perimeter and remove the inflatable TC/DSC annulus seal.

5. Connect the cask drain line to the cask, open the cask cavity drain port and allow water from the annulus to drain out until the water level is approximately twelve inches below the top edge of the DSC shell. Take swipes around the outer surface of the DSC shell and check for smearable contamination in accordance with the Technical Specification 5.2.4.d limits.

   CAUTION: Radiation dose rates are expected to be high at the vent and siphon port locations. Use proper ALARA practices (e.g., use of temporary shielding, appropriate positioning of personnel, etc.) to minimize personnel exposure.

6. Drain approximately 900 gallons of water (as indicated on a flowmeter) from the DSC back into the fuel pool or other suitable location If not drained in Step 8.1.2.16. Consistent with ISG-22 [8.5] guidance, helium at 1-3 psig is used to backfill the DSC with an inert gas (helium) as water is being removed from the DSC. Only helium may be used to assist in the removal of water.

7. Monitor TC/DSC annular water level and replenish as necessary until drained.

8. Install the automatic welding machine onto the inner top cover plate and place the inner top cover plate with the automatic welding machine onto the DSC. Optionally, the inner top cover plate and the automatic welding machine can be placed separately. Verify proper fit-up of the inner top cover plate with the DSC shell.

9. Check radiation levels along surface of the inner top cover plate. Temporary shielding may be installed as necessary to minimize personnel exposure.

10. Insert a 1/4-inch tubing of sufficient length and adequate temperature resistance through the vent port such that it terminates just below the DSC shield plug. Connect the flexible tubing to a hydrogen monitor to allow continuous monitoring of the hydrogen atmosphere in the DSC cavity during welding of the inner cover plate, *in compliance with Technical Specification 5.2.6.* Optionally, other methods may be used for continuous monitoring of the hydrogen atmosphere in the DSC cavity during welding of the inner top cover plate, *to comply with the Technical Specification.*

11. Cover the cask/DSC annulus to prevent debris and weld splatter from entering the annulus.

12. Ready the automatic welding machine and tack weld the inner top cover plate to the DSC shell. Install the inner top cover plate weldment and remove the automatic welding machine.

CAUTION: Continuously monitor the hydrogen concentration in the DSC cavity using the arrangement or other alternate methods described in Step 10 during the inner top cover plate cutting/welding operations. Verify that the measured hydrogen concentration does not exceed a safety limit of 2.4% [8.2 and 8.3]. If this limit is exceeded, stop all welding operations and purge the DSC cavity with approximately 2-3 psig helium via the tubing to reduce the hydrogen concentration safely below the 2.4% limit.

13. Perform dye penetrant weld examination of the inner top cover plate weld in accordance with the Technical Specification 5.2.4.b requirements.

14. Remove purge lines and connect the VDS to the DSC siphon and vent ports.

15. Install temporary shielding to minimize personnel exposure throughout the subsequent welding operations as required.

16. a. If using blowdown method to remove water, engage helium supply (up to 15 psig) and open the valve on the vent port and allow helium to force the water from the DSC cavity through the siphon port.

    b. If using water pumps to remove water without blowdown, pump water from DSC.

17. Once the water stops flowing from the DSC, close the DSC siphon port and disengage the helium source or turn off the section pump, as applicable.

18. Connect the hose from the vent port and the siphon port to the intake of the vacuum pump. Connect a hose from the discharge side of the VDS to the plant's radioactive waste system or spent fuel pool. Connect the VDS to a helium source.

    Note: Proceed cautiously when evacuating the DSC to avoid freezing consequences.

19. Open the valve on the suction side of the pump, start the VDS and draw a vacuum on the DSC cavity. The cavity pressure should be reduced in steps of approximately 100 mm Hg, 50 mm Hg, 25 mm Hg, 15 mm Hg, 10 mm Hg, 5 mm Hg, and 3 mm Hg. After pumping down to each level (these levels are optional), the pump is valved off and the cavity pressure monitored. The cavity pressure will rise as water and other volatiles in the cavity evaporate. When the cavity pressure stabilizes, the pump is valved in to complete the vacuum drying process. It may be necessary to repeat some steps, depending on the rate and extent of the pressure increase. Vacuum drying is complete when the pressure stabilizes for a minimum of 30 minutes at 3 mm Hg or less as specified in Technical Specification 3.1.1.

    CAUTION: Radiation dose rates are expected to be high at the vent and siphon port locations. Use proper ALARA practices (e.g., use of temporary shielding, appropriate positioning of personnel, etc.) to minimize personnel exposure.

20. Open the valve to the vent port and allow the helium to flow into the DSC cavity.

21. Pressurize the DSC with helium up to 15 psig.

22. Helium leak test the inner top cover plate weld for a leak rate of 1×10^{-4} atm cm^3 /sec. This test is optional.

23. If a leak is found, repair the weld, repressurize the DSC and repeat the helium leak test.

24. Once no leaks are detected, depressurize the DSC cavity by releasing the helium through the VDS to the plant's spent fuel pool or radioactive waste system.

25. Re-evacuate the DSC cavity using the VDS. The cavity pressure should be reduced in steps of approximately 10 mm Hg, 5 mm Hg, and 3 mm Hg. After pumping down to each level, the pump is valved off and the cavity pressure is monitored level (these levels are optional). When the cavity pressure stabilizes, the pump is valved in to continue the vacuum drying process. Vacuum drying is complete when the pressure stabilizes for a minimum of 30 minutes at 3 mm Hg or less in accordance with Technical Specification 3.1.1 limits.

26. Open the valve on the vent port and allow helium to flow into the DSC cavity to pressurize the DSC *between 21.5 to 23.0* psig and hold for 10 min. Depressurize the DSC cavity by releasing the helium through the VDS to the plant spent fuel pool or radioactive waste system to about 2.5 psig in accordance with Technical Specification 3.1.2.b limits.

    CAUTION: Radiation dose rates are expected to be high at the vent and siphon port locations. Use proper ALARA practices (e.g., use of temporary shielding, appropriate positioning of personnel, etc.) to minimize personnel exposure.

27. Close the valves on the helium source.

U.8.1.4 <u>DSC Sealing Operations</u>

CAUTION: During performance of steps listed in Section U.8.1.4, monitor the Cask/DSC annulus water level and replenish as necessary to maintain cooling.

1. Disconnect the VDS from the DSC. Seal weld the prefabricated plugs over the vent and siphon ports. Inject helium into blind space just prior to completing welding, and perform a dye penetrant weld examination in accordance with the Technical Specification 5.2.4.b requirements.

2. Temporary shielding may be installed as necessary to minimize personnel exposure. Install the automatic welding machine onto the outer top cover plate and place the outer top cover plate with the automatic welding system onto the DSC. Optionally, outer top cover plate may be installed separately from the welding machine. Verify proper fit up of the outer top cover plate with the DSC shell.

3. Tack weld the outer top cover plate to the DSC shell. Place the outer top cover plate weld root pass.

4. Helium leak test the inner top cover plate and vent/siphon port plate welds using the leak test port in the outer top cover plate in accordance with Technical Specification 5.2.4.c limits. Verify that the personnel performing the leak test are qualified in accordance with SNT-TC-1A [8.4]. Alternatively this can be done with a test head in step 1 of Section U.8.1.4.

5. If a leak is found, remove the outer cover plate root pass (if not using test head), the vent and siphon port plugs and repair the inner cover plate welds. Repeat procedure steps from U.8.1.3 Step 19.

6. Perform dye penetrant examination of the root pass weld. Weld out the outer top cover plate to the DSC shell and perform dye penetrant examination on the weld surface in accordance with the Technical Specification 5.2.4.b requirements.

7. Install and seal weld the prefabricated plug, if applicable, over the outer cover plate test port and perform dye penetrant weld examinations in accordance with Technical Specification 5.2.4.b requirement.

8. Remove the automatic welding machine from the DSC.

9. Open the cask drain port valve and drain the water from the cask/DSC annulus.

10. Rig the cask top cover plate and lower the cover plate onto the TC.

11. Bolt the cask cover plate into place, tightening the bolts to the required torque in a star pattern.

    CAUTION: Monitor the applicable time limits of Technical Specification 3.1.3 until the completion of DSC transfer Step 6 of Section U.8.1.6.

U.8.1.5 TC Downending and Transfer to ISFSI

Note: Alternate Procedure for Downending of Transfer Cask: Some plants have limited floor hatch openings above the cask/trailer/skid, which limit crane travel (within the hatch opening) that would be needed in order to downend the TC with the trailer/skid in a stationary position. For these situations, alternate procedures are to be developed on a plant-specific basis, with detailed steps for downending.

1. Re-attach the TC lifting yoke to the crane hook, as necessary. Ready the transport trailer and cask support skid for service.

2. Move the scaffolding away from the cask as necessary. Engage the lifting yoke and lift the cask over the cask support skid on the transport trailer.

3. The transport trailer should be positioned so that cask support skid is accessible to the crane with the trailer supported on the vertical jacks.

4. Position the cask lower trunnions onto the transfer trailer support skid pillow blocks.

5. Move the crane forward while simultaneously lowering the cask until the cask upper trunnions are just above the support skid upper trunnion pillow blocks.

6. Inspect the positioning of the cask to insure that the cask and trunnion pillow blocks are properly aligned.

23. Close and lock the ISFSI access gate and activate the ISFSI security measures.

24. Ensure the HSM-H maximum air exit temperature requirements of Technical Specification 3.1.4 are met.

U.8.1.7 Monitoring Operations

1. Perform routine security surveillance in accordance with the licensee's ISFSI security plan.

2. Perform one of the two alternate daily surveillance activities listed below:

   a. A daily visual surveillance of the HSM air inlets and outlets to insure that no debris is obstructing the HSM vents in accordance with Technical Specification 5.2.5.a requirements.

   b. A temperature measurement of the thermal performance, for each HSM, on a daily basis in accordance with Technical Specification 5.2.5.b requirements.

U.9.1.7.5 Specification for Acceptance Testing of Neutron Absorbers by Neutron Transmission

CAUTION

Section U.9.1.7.5 is incorporated by reference into the NUHOMS® CoC 1004 Technical Specification 4.1 (Note 3) and shall not be deleted or altered in any way without a CoC amendment approval from the NRC. The text of this section is shown in bold type to distinguish it from other sections.

Neutron Transmission acceptance testing procedures shall be subject to approval by the Certificate Holder. Test coupons shall be removed from the rolled or extruded production material at locations that are systematically or probabilistically distributed throughout the lot. Test coupons shall not exhibit physical defects that would not be acceptable in the finished product, or that would preclude an accurate measurement of the coupon's physical thickness.

A lot is defined as all the pieces produced from a single ingot or heat *or from a group of billets from the same heat.* If this definition results in lot size too small to provide a meaningful statistical analysis of results, an alternate larger lot definition may be used, so long as it results in accumulating material that is uniform for sampling purposes.

The sampling rate for neutron transmission measurements shall be such that there is at least one neutron transmission measurement for each 2000 square inches of final product in each lot.

The B10 areal density is measured using a collimated thermal neutron beam of up to 1.2 centimeter diameter. A beam size greater than 1.2 centimeter diameter but no larger than 1.7 centimeter diameter may be used if computations are performed to demonstrate that the calculated $k_{effective}$ of the system is still below the calculated Upper Subcritical Limit (USL) of the system assuming defect areas the same area as the beam.

The neutron transmission through the test coupons is converted to B10 areal density by comparison with transmission through calibrated standards. These standards are composed of a homogeneous boron compound without other significant neutron absorbers. For example, boron carbide, zirconium diboride or titanium diboride sheets are acceptable standards. These standards are paired with aluminum shims sized to match the effect of neutron scattering by aluminum in the test coupons. Uniform but non-homogeneous materials such as metal matrix composites may be used for standards, provided that testing shows them to provide neutron attenuation equivalent to a homogeneous standard.

Alternatively, digital image analysis may be used to compare neutron radioscopic images of the test coupon to images of the standards. The area of image analysis shall be up to 1.1 cm^2. *The method shall demonstrate sufficient sensitivity to distinguish between areal density at the specified minimum, 1% above and below the minimum.*

SECURITY RELATED INFORMATION
WITHHELD UNDER 10 CFR 2.390

ALL DIMENSIONS ARE NOMINAL UNLESS A SPECIFIC TOLERANCE IS INDICATED WITH THE DRAWING DIMENSION

DIMENSIONS ARE IN INCHES AND DEGREES UNLESS OTHERWISE SPECIFIED. DIMENSIONING IN ACCORDANCE WITH ASME Y14.5M

INTERPRETATION OF WELD SYMBOLS PER ANSI / AWS 2.4

TRANSNUCLEAR
AN AREVA COMPANY

SAFETY ANALYSIS REPORT
NUHOMS® OS197 – LIGHT
ONSITE TRANSFER CASK
DECON AREA CASK SHIELDING ASSEMBLIES

DRAWING NO.	SCALE	SHEET	REVISION
NUH-03-8012	NONE	1 OF 1	0A

SECURITY RELATED INFORMATION
WITHHELD UNDER 10 CFR 2.390

ALL DIMENSIONS ARE NOMINAL UNLESS A SPECIFIC TOLERANCE IS INDICATED WITH THE DRAWING DIMENSION

DIMENSIONS ARE IN INCHES AND DEGREES UNLESS OTHERWISE SPECIFIED. DIMENSIONING IN ACCORDANCE WITH ASME Y14.5M

INTERPRETATION OF WELD SYMBOLS PER ANSI / AWS 2.4

TRANSNUCLEAR
AN AREVA COMPANY

SAFETY ANALYSIS REPORT
NUHOMS® OS197-LIGHT
ONSITE TRANSFER CASK SUPPORT SKID
SUPPLEMENTAL SHIELDING

DRAWING NO.	SCALE	SHEET	REVISION
NUH-03-8011	NONE	1 OF 4	DA

SECURITY RELATED INFORMATION
WITHHELD UNDER 10 CFR 2.390

SECURITY RELATED INFORMATION
WITHHELD UNDER 10 CFR 2.390

SECURITY RELATED INFORMATION
WITHHELD UNDER 10 CFR 2.390

DRAWING NO.	SHEET	REVISION
NUH-03-8011	4 OF 4	0A

W.2 Principal Design Criteria

This section provides the principal design criteria for the NUHOMS® OS197L TC System. The principal design criteria for the NUHOMS® OS197L TC are the same as the NUHOMS® OS197 TC as described in Chapter 3. Section W.2.1 presents a general description of the spent fuel to be stored. Section W.2.2 provides the design criteria for environmental conditions and natural phenomena. Section 0 provides a description of the systems which have been designated as important to safety. Section W.2.4 discusses decommissioning considerations. Section W.2.5 summarizes the NUHOMS® OS197L TC design criteria.

W.2.1 Spent Fuel To Be Stored

The NUHOMS® DSCs are designed to handle a total of 24 or 32 PWR fuel assemblies and 52 or 61 BWR fuel assemblies with the same characteristics as those described in Chapter 3 (24P and 52B DSCs) and Appendices K.2 (61BT DSC), L.2 (24PT2 DSC), M.2 (32PT DSC), and N.2 (24PHB DSC).

W.2.1.1 General Operating Functions

No change.

W.2.2 Design Criteria for Environmental Conditions and Natural Phenomena

The NUHOMS® OS197L TC is *in general* handled and utilized in the same manner as the existing NUHOMS® OS197 TC System. *Differences in operation/handling of the OS197L TC include:*

- *Requirement to drain water from the DSC, with backfill* of *He, to meet the 75-ton lift limit prior to removing the TC from the fuel pool,*
- *Additional measures utilized to assure that the TC/DSC annulus water level is maintained during lift from fuel pool to decontamination area,*
- *Increased use of plant ALARA measures such as remote monitoring devices to keep exposures ALARA due to the high dose rates on the 75-ton bare TC during lifts from the fuel pool to the decontamination area and from the decontamination area to the transfer trailer,*
- *Placement of the 75-ton bare TC into the decontamination area shield and placement of "shield bell",*
- *Use of a light weight TC lid or standard TC lid with a gasket, for lift from decontamination area to the transfer trailer. The gasket on the lid allows the TC/DSC annulus to remain filled with water,*
- *Placement of the 75-ton bare TC on the transfer trailer with trailer shield, and*
- *Draining of the TC/DSC annulus is performed after installation on the transfer trailer rather than just prior to installation of the TC lid for the OS197 TC System.*

The environmental conditions, natural phenomena and design criteria are the same as described for the NUHOMS® OS197 TC in Chapter 3. Design criteria for the NUHOMS® DSC and HSM remain unchanged.

W.2.2.1 Tornado Wind and Tornado Missiles

No change.

W.2.2.2 Water Level (Flood) Design

No change.

W.2.2.3 Seismic Design

No change.

W.2.2.4 Snow and Ice Loading

No change.

W.2.2.5 Combined Load Criteria

No change.

W.2.3 Safety Protection Systems

W.2.3.1 General

Table W.2-1 provides the safety classification of the OS197L TC system components.

W.2.3.2 Protection By Multiple Confinement Barriers and Systems

No change.

W.2.3.3 Protection By Equipment and Instrumentation Selection

No change.

W.2.3.4 Nuclear Criticality Safety

W.2.3.4.1 Control Methods for Prevention of Criticality

No change.

W.2.3.4.2 Error Contingency Criteria

No change.

W.2.3.4.3 Verification Analysis-Benchmarking

No change.

W.2.3.5 Radiological Protection

The bare OS197L TC provides less shielding than the OS197 TC system. The reduced shielding of the bare TC results in significantly higher dose rates on and around the TC when being lifted from the fuel pool to the decontamination area and from the decontamination area to the transfer trailer. To mitigate the effect of these high dose rates on occupational workers, these operations are done remotely as described in Chapter W.8. In addition, when the TC is in the decontamination area and on the transfer trailer supplemental shielding is used to reduce the dose rates down to those commensurate with the OS197 TC System. Therefore, with the use of remote handling and the supplemental shielding features of the OS197L TC to protect occupational workers and members of the public against direct radiation and releases of radioactive material and to minimize dose following any off-normal or accident condition are the same as those for the OS197 TC System.

W.2.3.6 Fire and Explosion Protection

No change.

W.2.4 Decommissioning Considerations

No change.

W.2.5 Summary of NUHOMS® OS197L TC Design Criteria

The principal design criteria for the NUHOMS® OS197L TC are the same as those presented for the NUHOMS® OS197 TC in Chapter 3. The NUHOMS® OS197L TC is designed to handle a DSC loaded with PWR or BWR fuel assemblies identical to those stored in a NUHOMS® OS197 TC as described in Chapter 3 and Appendices K.2, L.2, M.2 and N.2.

Table W.2-1
OS197L TC System Components and Safety Classification

OS197L TC System Components	Safety Classification
Onsite Transfer Cask	
– Structural Shell and Cover Plates	Important to Safety(1)
– Upper and Lower Trunnions	Important to Safety(1)
– Decontamination Area Shield	Not Important to Safety(1)
– Trailer Shielding	Important to Safety(1)
Transfer Equipment	
– Cask Lifting Yoke	Safety Related(2)
– Transport Trailer/Skid	Not Important to Safety(1)
– Ram Assembly	Not Important to Safety(1)
– Dry Film Lubricant	Not Important to Safety(1)

Notes:

(1) Structures, systems and components "important to safety" are defined in 10CFR 72.3 as those features of the ISFSI whose function is (1) to maintain the conditions required to store spent fuel safety, (2) to prevent damage to the spent fuel container during handling and storage, or (3) to provide reasonable assurance that spent fuel can be received, handled, packaged, stored, and retrieved without undue risk to the health and safety of the public.

(2) Yoke and rigid or sling lifting members are classified as "Safety Related" in accordance with 10CFR50.

W.3 Structural Evaluation

This section describes the structural evaluation of the NUHOMS® OS197L Transfer Cask (TC). The OS197L TC is a modified version of the OS197/OS197H TCs (henceforth referred as the OS197 TC) designed to enable "under-the-hook" lift weights of 75 tons. The OS197L TC may be used for transfer of loaded DSCs currently licensed under CoC 1004 (24P, 52B, 61BT, 24PT2, 32PT and 24PHB) [3.1]. The structural evaluation for the OS197L TC is based on the OS197 TC evaluations documented in Chapter 8, and additional evaluations as described in Appendices K, L, M and N for payloads associated with the 61BT, 24PT2, 32PT and 24PHB DSCs, respectively. The additional evaluations provided in this section address specific design differences between the OS197L TC and the OS197 TC.

The OS197L TC requires use of supplemental shielding when the transfer cask is in the decontamination area during handling operations and when the transfer cask is placed on the transfer trailer skid. The structural evaluation of the supplemental shielding is summarized in Section W.3.10.

W.3.1 OS197L TC Description

The specific design differences in the OS197L TC relative to OS197 TC are summarized below:

- The 1.5" thick structural shell and the 0.5" thick inner liner (both SA-240 stainless steel) are replaced with a single thicker 2.68" thick shell of the same material. This represents an increase in the TC shell structural capacity relative to the OS197 TC.
- The encapsulated 3.56" thick lead thickness in the OS197 TC is eliminated to achieve the desired weight reduction.
- A neutron shield assembly is provided with the inner and outer shells made from ¼" thick plate material instead of a neutron shield assembly that is integral to the structural shell on the inside and a 3/16" thick outer shell. The neutron shield materials (type 304), total annulus water thickness of 3" and the configuration of the internal stiffening elements remain *essentially* unchanged.
- The two-piece upper trunnions assemblies made from SA-564 Type 630 steel trunnion and welded into a forged Type 304 steel trunnion sleeve with encapsulated NS-3 for the OS197 TC are replaced with one solid trunnion design made from SA-182 Type FXM-19 stainless steel. This modified trunnion design results in a stronger trunnion as it eliminates the SA564, Type 630 to SA 240, Type 304 weld.
- The two-piece lower trunnions made from Type 304 stainless with encapsulated NS-3 are replaced with solid Type 304 forgings.

Specific evaluations are performed to address the modified OS197L TC trunnion configuration. The evaluations also address the effect on local shell stresses. Thermal stresses of the cask are also evaluated. All other structural analyses for the OS197 TC bound the OS197L TC because

the cask structural shell capacity of the OS197L TC is higher than that provided by the OS197 and the top and bottom forging assemblies are unchanged.

W.3.2 Design Criteria

The structural design criteria for the OS197L TC are the same as that applicable to the OS197 TC as summarized in Chapter 3. Similar to the OS197 TC, the OS197L TC is designed to meet the stress allowables of the ASME Code [3.2] Subsection NC for Class 2 components. The OS197 TC criteria summarized in Table 3.2-1 (component design loadings, as applicable), Table 3.2-7 (load combinations), Table 3.2-11 (stress criteria) and Table 3.2-12 (bolts design criteria) are applicable to the OS197L TC. The OS197 TC ASME Code exceptions described in Table 4.9-1 *are* also applicable to the OS197L TC.

The test load criteria for the upper trunnions of the OS197L TC are the same as described in Section 4.2.3.3, except that the test load is conservatively equal to 300% of the design load (instead of 150% for the OS197 TC).

The supplemental shielding is designed in accordance with AISC Code, Manual of Steel Construction, Ninth Edition [3.4].

W.3.3 OS197L TC Weight

The dry weight of the OS197L TC is presented in Table W.3-1. The total weight of the cask, including neutron shield water, is approximately 62,000 lbs. This compares with the corresponding weight of 111,250 lbs for the OS197 TC. To provide flexibility during transfer from the decontamination area to the trailer, a 1" thick aluminum cask top lid *(cover)* that weights approximately 500 lbs may be used in lieu of the stainless cask top lid *(cover)*.

The OS197L TC weights as described in Table W.3-1 are to be used in conjunction with the payload weights for the various DSCs as described in the applicable sections in Chapter 8 (Tables 8.1-4 and 8.1-5 for the 24P and 52B DSCs), and Appendices K.3, L.3, M.3 and N.3. Each specific user is to evaluate the total under-the-hook lift weights against plant specific crane capacity limits in accordance with the requirements of 10CFR72.212.

W.3.4 Mechanical Properties of Materials

The materials properties for the OS197L TC are specified in Section 8.1, Table 8.1-3. *The interim top cover is fabricated from aluminum type 6061-T651. The material properties for aluminum type 6061 – T651 are summarized in Appendix P, Table P.3.3-4.*

W.3.5 General Standards for Casks

The OS197L is fabricated using the same materials as the OS197 TC. Thus, there are no changes to the documentation in Chapter 4 and Appendices K.3, L.3, M.3 and N.3 relative to chemical and galvanic reactions.

The evaluation of the OS197L TC is based on critical lift weights of 250,000 lbs.

The thermal analysis of the OS197L along with a summary of the effect on pressures and temperatures is described in *Chapter* W.4.

As reported in Section 8.2.5.1C, the g loads for the OS197 TC were determined to be 59 g for the end drop, 49 g for the side drop and 25 g for a corner drop. Based on these accelerations, bounding accelerations of 75g for the horizontal (side) and vertical drops and 25g for the corner drop were used for the OS197 TC drop evaluations. The OS197 TC evaluations are documented in Chapter 8. Using the same methodology as that described in Section 8.2.5.1C for the OS197 TC, the equivalent loads for the OS197L TC are 75 g for an end drop, 61 g for a side drop and 25 g for a corner drop. Therefore, the 75g accident drop evaluation results for the side and end drops and the 25g evaluations for the corner drop performed for the OS197 TC and reported in Section 8.2 remain bounding and are applicable to the OS197L TC. These g-loads are conservative with respect to shell stresses since the thicker OS197L TC shell has a higher load capacity than the OS197 TC shell configuration. Hence, all the cask accident drop results reported in Section 8.2, and Appendices K.3, L.3, M.3 and N.3 remain bounding and, thus, are not affected.

W.3.8 Effect of Increased OS197L Temperatures on DSC Shell and Basket Components

Based on the thermal analysis documented in Chapter W.4, the maximum temperature increase applicable to the DSC shell and basket components is approximately on the order of 27°F for normal, off-normal, and accident conditions (except for the 24PHB DSC where the maximum increase for the accident condition is on the order of 87°F, the accident temperature is a post drop accident condition and it does not have an effect on the accident drop evaluations). Thus, the magnitude increases will not appreciable affect the material properties or the allowables used for the evaluations of these DSCs as documented in Chapter 8 and Appendix K, Chapter K.3, Appendix L, Chapter L.3, Appendix M, Chapter M.3 and Appendix N, Chapter N.3. Furthermore, the accident pressures used in the structural evaluations bound those calculated in Chapter W.4.

W.3.9 OS197L TC Interim Cask Cover

The interim top cask cover, is an aluminum plate (nominal 1" thick and 78.62" diameter) that interfaces with the cask top bolting, similar to the standard top cask cover. *The interim aluminum top cask cover is used only inside the fuel building when the OS197L TC is lifted from the decontamination area to the transfer trailer, where it is down-ended to its horizontal position onto the transfer trailer skid. Furthermore, its use is limited only to the scenario when the neutron shield is to be drained to reduce total cask weight and, therefore, the cask/DSC annulus is to remain filled.* Following placement of the cask on the trailer, and placement of the inner top shield on the transfer trailer, the interim cask top cover would be removed and the standard top cask cover installed prior to exiting the spent fuel/reactor building.

The function of the interim aluminum cover is to retain the DSC/cask annulus water during the cask down-ending operation. The aluminum cover is installed with a gasket and bolted to the cask with 16 bolts. Furthermore, there is no internal pressure because the annulus space is vented using the top fill or drain ports in the cask side and/or through fittings in the interim cask cover. Thus, the only stresses on the cover are due to the small hydraulic pressure of the cask/DSC annulus water. This hydraulic pressure and the resulting stresses are minimal. Conservatively assuming that the interim cover is under hydrostatic pressure from a DSC full of

water the stress is on the order of 3.1 ksi versus a conservatively defined allowable stress ($1.5S_m$ at 250°F) for aluminum type 6061-T651 of 13.8 ksi.

The above evaluations assume that the interim aluminum cover is handled using a single failure proof crane. If a single failure proof crane is not used, the licensee is to evaluate the effects and consequences of postulated accident drop inside the fuel/reactor building.

The interim cover has lifting points that meet ANSI N14.6 and weighs approximately 500 lbs.

W.3.10 Structural Evaluation of OS197L TC Supplemental Shielding Components

The OS197L TC supplemental shielding when the transfer cask is placed in the decontamination area consists of an upper cask shield (shielding bell) and a lower cask shield (shielding sleeve) made from carbon steel plate 6" thick. The supplemental shielding when the transfer cask is mounted on the trailer's skid consists of massive (2.5" thick combined with additional 3" thick) carbon steel plates which are integral (i.e., welded) to the skid or bolted to each other. The supplemental shielding components are evaluated using the stress allowable criteria of AISC Code, Manual of Steel Construction, Ninth Edition, summarized in Table W.3-5. The decontamination area shielding is evaluated for deadweight and seismic loads. The skid-mounted supplemental shielding is evaluated for deadweight and conservatively defined (2g) handling loads. Conservatively evaluated bounding stresses are summarized in Table W.3-6 and Table W.3-7.

The above evaluations assume that the supplemental shielding components are handled using a single failure proof crane when these components are handled inside the fuel/reactor building. If a single failure proof crane is not used, the licensee is to evaluate the accidental drop of these shielding components under 10CFR50.59 and 10CFR 72.212, and evaluate consequences of the accident drops.

The only component that may be handled outside the fuel/reactor building is the top (outer) skid shielding. The accident drop of this component is provided in Section W.11.1.5

W.3.11 References

3.1 NUHOMS® Certificate of Compliance for Dry Spent Fuel Storage Casks, Amendment No. 8, December 2005, Docket No. 72-1004.

3.2 American Society of Mechanical Engineers, ASME Boiler and Pressure Vessel Code, Section III, Division 1, 1983 Edition with Winter 1985 Addenda.

3.3 American National Standard, "For Radioactive Materials - Special Lifting Devices for Shipping Containers Weighing 10,000 Pounds (4500 Kg) or More," ANSI N14.6-1986, American National Standards Institute, Inc. New York, New York (1993).

3.4 AISC Manual of Steel Construction, Ninth Edition, 1989.

Table *W.3-1*
Summary of OS197L TC Weights

Item	Weight (lbs)
OS197*L* Maximum **Dry** Weight including Neutron Shield Assembly and Top Cask Lid	57,400
Neutron Shield Water	4,600
Top Cask Lid	5,150

Table *W.3-2*
Summary of Maximum Stress Ratios for Critical Lifts

Enveloping Stress Ratios Critical Lift Load Combinations		P_m			$P_m + P_b$			$P_m + P_b + Q$			Notes
		Calculated	Allowable	Ratio	Calculated	Allowable	Ratio	Calculated	Allowable	Ratio	
Level A (A1/A2/A3)	**Cask Shell, ANSYS Evaluations / ASME Criteria**										
	at Trunnion(s)	5.86 ksi	18.7 ksi	0.31	18.1 ksi	28.1 ksi	0.65	33.8 ksi	56.10	0.60	Type 304 @
	near Trunnion(s)[1]	4.21 ksi	18.7 ksi	0.23	16.6 ksi	28.1 ksi	0.59	28.1 ksi	56.10	0.50	400°F
	Trunnion Evaluations, Hand Calculations (ASME–Lower; ANSI N14.6–Upper)										
		P_m			$P_m + P_b$			$P_m + P_b + Q$			ASME Criteria
	Lower Trunnion	2.55 ksi	20.3 ksi	0.13	4.81 ksi	30.5 ksi	0.16	n/a	n/a	n/a	Type F304N
		Shear Stress			Normal Stress						N14.6 Criteria
	Upper Trunnion	2.86 ksi	4.07 ksi	0.70	5.01 ksi	6.78 ksi	**0.74**	n/a	n/a	n/a	Type FXM-19

Table *W.3-3*
Summary of Maximum Stress Ratios for Level A Load Combinations

Enveloping Stress Ratios - Level A (non-Critical Lift) Combinations

Enveloping Stress Ratios Non-Critical Level A Comb.		P_m			$P_m + P_b$			$P_m + P_b + Q$			Notes
		Calculated	Allowable	Ratio	Calculated	Allowable	Ratio	Calculated	Allowable	Ratio	
Level A (A4/A5)	Shell at Upper Trunnion/Lower Trunnion	6.05 ksi	18.7 ksi	0.32	20.1 ksi	28.1 ksi	0.72	35.8 ksi	56.1 ksi	0.64	ANSYS
	Shell near Upper Trunnion/Lower Trunnion[1]	4.44 ksi	18.7 ksi	0.24	14.7 ksi	28.1 ksi	0.56	27.4 ksi	56.1 ksi	0.49	Analysis
	Upper Trunnion (FXM-19)	2.51 ksi	30.2 ksi	0.08	2.96 ksi	45.3 ksi	0.07	n/a	n/a	n/a	Hand
	Lower Trunnion (Type F304N)	2.41 ksi	20.3 ksi	0.12	4.55 ksi	30.5 ksi	0.15	n/a	n/a	n/a	Calculations
			Max:	0.32		Max:	0.72		Max:	0.64	

Table *W.3-4*
Summary of Maximum Stress Ratios for Level C Load Combinations

Enveloping Stress Ratios For Level C Combinations		P_m			$P_m + P_b$			$P_m + P_b + Q$			Notes
		Calculated	Allowable	Ratio	Calculated	Allowable	Ratio	Calculated	Allowable	Ratio	
Level C (C1/C2)	Shell at Upper Trunnion/Lower Trunnion	5.12 ksi	18.7 ksi	0.27	17.3 ksi	28.1 ksi	0.62	not required for Level C			ANSYS
	Shell near Upper Trunnion/Lower Trunnion[1]	3.23 ksi	18.7 ksi	0.17	11.9 ksi	28.1 ksi	0.43	n/a	n/a	n/a	Analysis
	Upper Trunnion (FXM-19)	1.44 ksi	36.2 ksi	0.04	2.33 ksi	54.4 ksi	0.04	n/a	n/a	n/a	Hand
	Lower Trunnion (Type F304N)	1.19 ksi	24.4 ksi	0.05	2.25 ksi	36.5 ksi	0.06	n/a	n/a	n/a	Calculations
			Max:	0.27		Max:	0.62				

Note: (1) 4" from upper trunnion/shell interface and 3" from lower trunnion/shell interface.

Table W.3-5

OS197L Supplemental Shielding Allowable Stress Criteria

Item/Component	*Stress Category*	*Allowable Stress*
Steel plates	Tension, compression or bending	0.60 S_y
Steel plates	Shear stress	0.40 S_y
Steel plates	Bearing	0.90 S_y
Welds (groove or fillet)	Tension, compression	Lesser of 0.6 S_y (base metal), or 0.30 S_u(weld metal)
Welds (groove or fillet)	Shear	0.30 S_u
Bolts	Tension	0.33F_u
Bolts	Shear	0.17F_u

Table W.3-6 – Summary of Results for Decon Area Cask Supplemental Shielding

Component / Evaluation Description	**Maximum Stress** (ksi)	**Allowable Stress** (ksi)	**Stress Ratio**
Decon Area Cask Shielding Deadweight Axial Stress	0.29	21.18	0.014
Decon Area Cask Shielding Seismic Axial Stress	8.02	28.23	0.284

Table W.3-7 – Summary of Results for Cask Skid Supplemental Shielding for 2g Handling Loads

Component / Evaluation Description	**Maximum Stress** (ksi)	**Allowable Stress** (ksi)	**Stress Ratio**
Skid Shield Plate Bending Stress	6.85	21.18	0.323
Skid Shield Weld Shear Stress	8.37	21.00	0.399
Skid Shielding Bolt Shear Stress	10.01	21.25	0.471
Skid Tie-Down Plate Bending Stress	8.93	21.18	0.422
Skid Tie-Down Plate Weld Shear Stress	11.17	21.00	0.532
Skid Tie-Down Connection Bolt Shear Stress	8.37	21.25	0.394

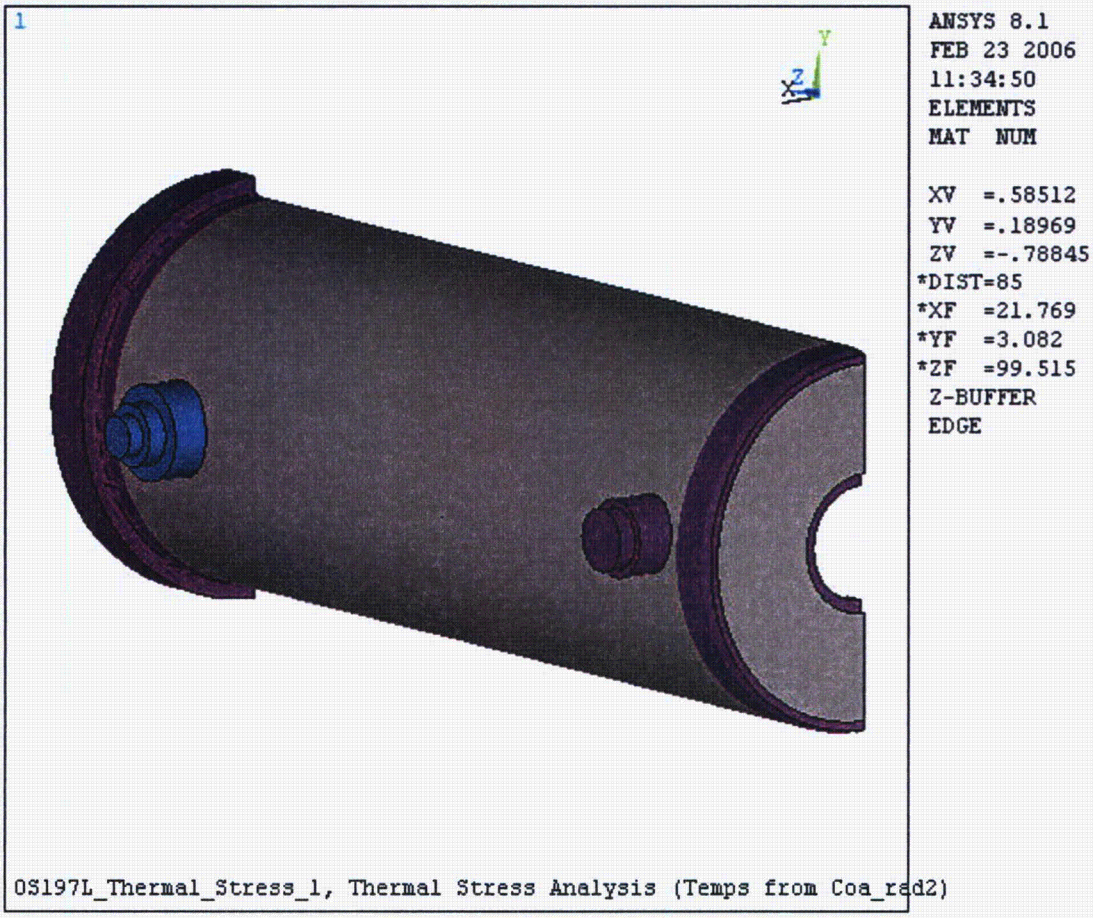

Note:

Material properties were assigned as follows:

Purple = SA-182 Type F304N (forgings)
Gray = SA-240 Type 304
Blue= SA-182 Type FXM-19 (Type XM-19 Forging)

Figure W.3-1
OS197L TC ANSYS Stress Analysis Model

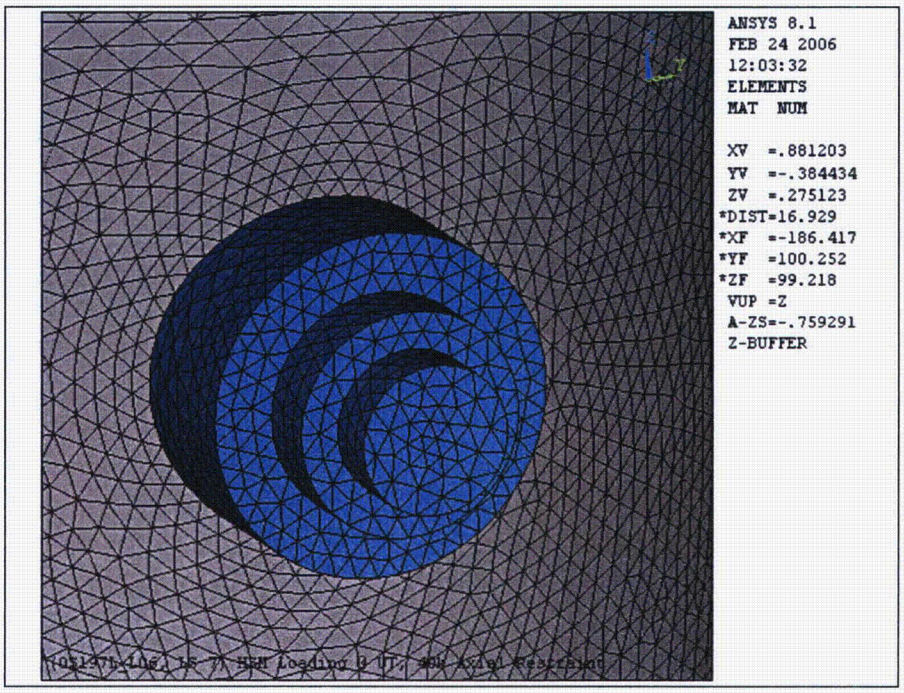

Upper Trunnion

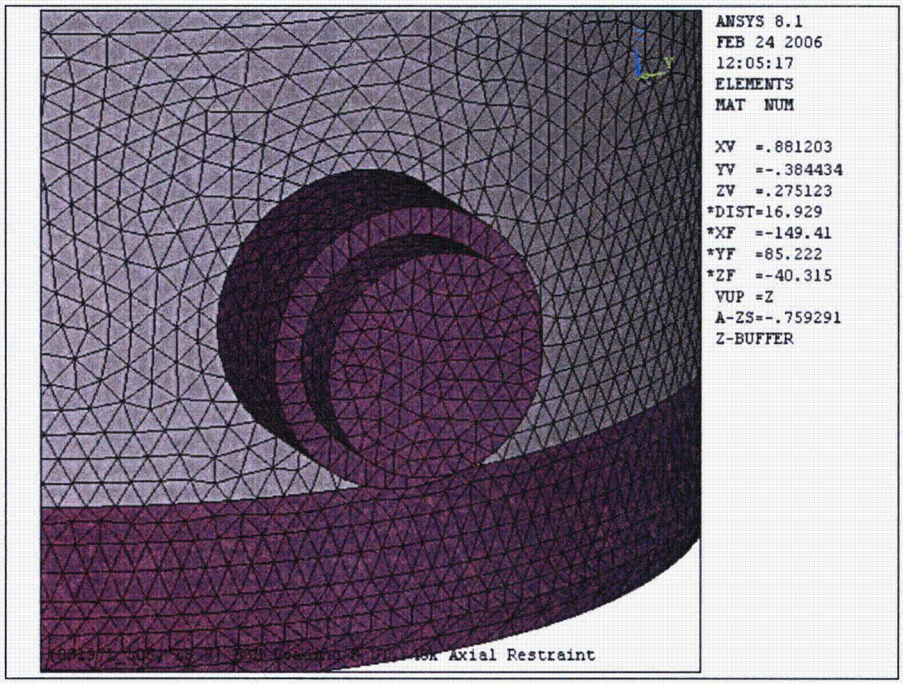

Lower Trunnion

Figure W.3-2
OS197L TC ANSYS Analysis Model – Upper and Lower Trunnions Detail

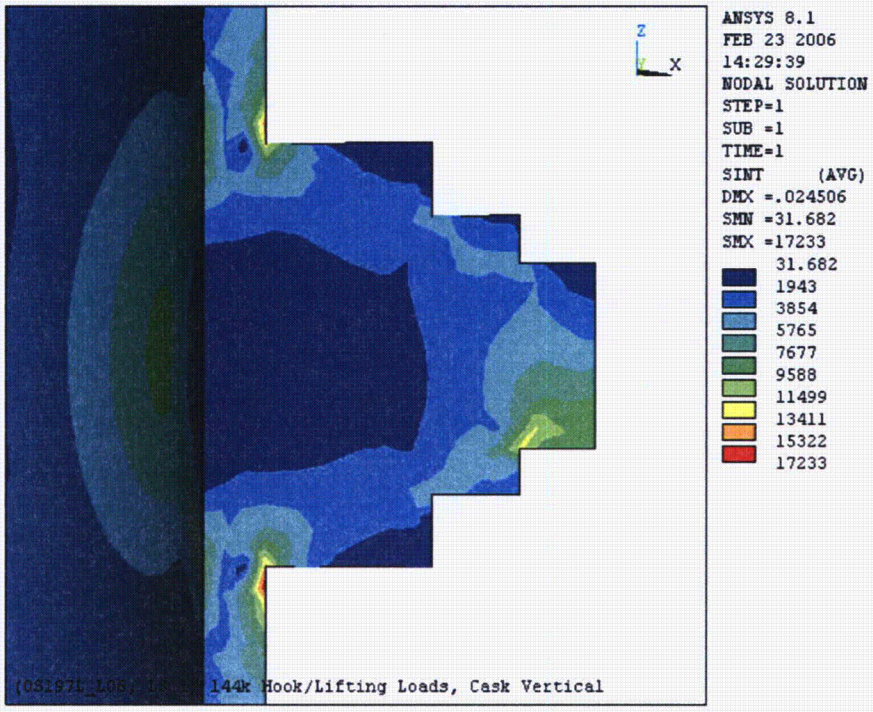

Figure W.3-3
ANSYS Model Stress Analysis Results – Upper Trunnion Region

W.5 Shielding Evaluation

This Appendix presents the shielding evaluation of the OS197L TC when used for fuel loading and transfer of *the* 52B, 24P, 61BT, 24PT2, 32PT and 24PHB *DSCs which are currently licensed under CoC 1004 for heat loads of 24kW or less.*

The shielding analysis is performed for *various configurations of the OS197L TC during loading and transfer operations containing a fully loaded 32PT DSC with design basis PWR fuel assemblies. Due to the limits on the maximum decay heat per fuel assembly and the maximum burnup allowed for the BWR fuel assemblies, the DSCs licensed to store BWR fuel assemblies, 61BT and 52B are not evaluated herein. T*he 32PT DSC *is selected as the* design basis *DSC for the purpose of this evaluation because the calculated normal condition (transfer) gamma dose rates are maximized. The dose rates on and around the OS197L TC (without temporary shielding) are dominated by primary gamma sources during normal, off-normal and accidents conditions of loading and transfer.* The results for normal operations demonstrate that exposures for OS197L TC activities with operational personnel present are bounded by OS197 TC exposures (remote crane operation is used and no personnel are present *in the immediate vicinity of the TC* while the cask is on the crane hook during normal operations).

W.5.1 *Discussion and Results*

A summary of the maximum dose rates on and around the OS197L TC with the 32PT DSC during loading and transfer operations during normal and accident conditions are shown in Table W.5-1 and Table W.5-2 respectively. The maximum dose rates on and around the OS197L TC with the 32PT DSC during the various operational evolutions for normal, off-normal and accident conditions are shown in Table W.5-5 through Table W.5-14. A brief description of the various shielding configurations evaluated herein in provided in Figure W.5-1 and in Section W.5.4.10. The dose rate results as a function of distance for various shielding configurations of the OS197L TC are also shown in Figure W.5-2.

A discussion of the method used to determine the design DSC and source terms for this evaluation is included in Section W.5.2. The model specification and shielding material densities are given in Section W.5.3. The method used to determine the dose rates due to 32 design basis fuel assemblies in the 32PT DSC for the various OS197L TC design configurations is provided in Section W.5.4. The radiological source terms are calculated with the SAS2H/ORIGEN-S modules of SCALE 4.4 [5.1] for the fuel. The shielding evaluation is performed with the MCNP5 [5.2] code with the ENDF/B-VI cross section library.

W.5.2 DSC and Source Specification

The radiological source terms are calculated with the SAS2H/ORIGEN-S modules of SCALE 4.4 [5.1] for the fuel. No additional source term calculations are performed herein and the design basis fuel source terms previously evaluated in Appendix M.5 are directly utilized, as appropriate, for use in the shielding calculations.

The NUHOMS® 32PT DSC is determined to be the design basis DSC for this evaluation because it contains the maximum number of PWR fuel assemblies. Moreover, a comparison of the maximum dose rate results for the OS197 TC from Appendix M, Table M.5-3 for the 32PT DSC (784 mrem/hour) and Appendix N, Table N.5-3 for the 24PHB DSC (738 mrem/hour) indicates that the gamma dose rates for the 32PT DSC are higher. Since the radial dose rates for the OS197L TC are dominated (greater than 99% contribution to the total dose rates) by primary gamma sources, the above argument for 32PT DSC is justified. As discussed in Chapter W.8, certain operations require the drainage of the water in the neutron shield when using the OS197L TC with the 32PT DSC. This implies that the 32PT is design basis DSC (for the OS197L TC) for occupational exposure evaluations.

In addition, the dose exposures due to the loss of neutron shielding accident are calculated by a conservative consideration with the, larger, 24PHB DSC neutron source terms from Appendix N. This is discussed in Section W.11.1.4.

The 1-D discrete ordinates code ANISN [5.3] and the CASK-81(22 neutron, 18 gamma-ray energy-group) coupled cross-section library [5.4] is used to determine these design basis source terms. The spent fuel parameters (the burnup/initial enrichment/cooling time combinations) from the appropriate fuel qualification tables and decay heat load zoning configurations for the 32PT DSC that produce the maximum surface dose rate on the side of the cask OS197L TC are utilized to determine the design basis source terms. This approach is described in detail in Appendix M, Section M.5.2.4.

W.5.2.1 ANISN Evaluation for Bounding Source Terms

The ANISN computer code employs a, 1-dimensional, discrete-ordinates, calculational methodology that is utilized in the scoping evaluations to determine the relative importance of the source terms for subsequent shielding evaluations. The results of the ANISN evaluations assist in the identification of the design basis source terms. This methodology has been utilized to perform fuel qualifications and is extensively documented in Appendix M, Section M.5, Appendix N, Section N.5 and Appendix P, Section P.5 for the 32PT, 24PHB and 24PTH DSCs respectively.

For the purpose of this evaluation, two different ANISN models are developed to determine the response functions for two bounding configurations – one with the bare OS197L cask and the other with the OS19L cask in the transfer configuration (with 5.5 inches) of additional gamma shielding to model the case of OS197L TC on the transfer trailer with supplemental trailer shield. Response functions for the bounding heat zone configuration for the inner and outer fuel assemblies, similar to that documented in Appendix M, Section M.5.2.4, are determined for the two configurations described above. The results of the ANISN calculations indicate that the design basis source terms for the outer zone (1.2 kW per assembly) of OS197L TC are identical to those for the OS197 TC. The design basis source terms for the inner zone (0.6 kW per assembly) of fuel assemblies for the OS197L TC is different from that of the OS197 TC, however, the relative contribution of this inner zone to the total dose rates (less than 1%) ensures that this results in an insignificant change in the overall dose rates. The results of the ANISN evaluation demonstrate that the dose rates on an around the OS197L TC are dominated by primary gamma sources from the outermost zone of fuel assemblies. These results also demonstrate that the

substitution of lead with steel does not result in a change significant enough to determine a new set of design basis source terms.

The OS197L TC design basis source terms are, therefore, identical to those utilized in the 32PT DSC evaluation with the OS197 TC and documented in Appendix M, Section M.5.2. These source terms, for the higher heat load assemblies (8 outer fuel assemblies, 1.2 kW per assembly) are from fuel with a burnup of 41 GWd/MTU, an initial enrichment of 3.1 wt. % U-235 and a cooling time of 5 years. These source terms, for the lower heat load assemblies 24 fuel assemblies, 0.6 kW per assembly) are from fuel with a burnup of 45 GWd/MTU, an initial enrichment of 3.3 wt. % U-235 and a cooling time of 23 years.

W.5.2.2 Primary Gamma Source Terms

As described above, the primary gamma source terms determined in Appendix M, Section M.5.2.1, are directly utilized in the shielding evaluations with the OS197L TC. The gamma source terms for the four regions (top nozzle, plenum, in-core and bottom nozzle) are shown in Table M.5-9 for the higher heat load fuel assemblies and in Appendix M, Table M.5-11 for the lower heat load fuel assemblies. The in-core primary gamma source spectrum for the design basis (1.2 kW) fuel assembly for the 32PT DSC is shown in column 2 of Table W.5-3. The in-core primary gamma source spectrum for the design basis (1.3 kW) fuel assembly for the 24PHB DSC, from Appendix N, Table N.5-10 is shown in column 3 of Table W.5-4. The total gamma source terms are also shown in Table W.5-4. A comparison of these two source terms indicates that there is no significant difference between the two total gamma source terms and the gamma source spectra. In summary, the design basis DSC and source terms for the OS197L shielding calculations can be determined based on the following justification:

- *the response function results determined in Section W.5.2.1 indicate that the absence of lead shielding does not significantly change the relative dose rate distributions,*
- *the TC radial dose rates are dominated by the primary gamma dose rates emanating from the fuel assemblies located in the peripheral locations of the basket,*
- *the total gamma source terms and spectra of the design basis 32PT DSC fuel assemblies and 24PHB DSC fuel assemblies are not significantly different (very similar), and*
- *the gamma surface dose rates for the OS197 TC with the 32PT DSC are higher than that of the 24PHB DSC.*

W.5.2.3 Neutron Source Terms

The total neutron source terms described in Appendix M, Section M.5.2.2, are directly utilized in the shielding evaluations for normal, off normal and accident conditions with the OS197L TC. The total neutron source terms for the 32PT DSC are directly obtained from Appendix M, Table M.5-14.

The fixed source spectrum in MCNP is assumed to follow a ^{244}Cm spontaneous fission spectrum for all of the calculations in this chapter. This approach to neutron dose rate calculations is

identical to that employed in Appendix P, Section P.5.2 for the MCNP dose rate evaluation of the 24PTH DSC. It is based on the following relationship:

$$p(E) = C \exp(-E/a)\sinh(bE)^{1/2}$$

The input parameters: a=0.906 MeV and b=3.848 MeV^{1}, as given in the MCNP manual [5.2].

W.5.2.4 Axial Peaking

The axial peaking factors for both neutron and gamma sources in PWR fuel utilized herein are directly obtained from those utilized in the 32PT DSC shielding evaluation. These factors are shown in Appendix M, Table M.5-15.

W.5.3 Material Densities

The material masses given in Appendix M, Table M.5-6 for the fuel are used to calculate material densities for in-core, plenum, top, and bottom regions of the fuel assembly. The material densities utilized in the MCNP calculations are shown in Appendix M, Table M.5-19.

Densities for miscellaneous materials like air, water, aluminum, carbon steel, stainless steel etc. are obtained from Appendix M, Table M.5-16. Material densities for the homogenized fuel/basket region used only in the ANISN models are also summarized in Appendix M, Table M.5-16.

W.5.4 Shielding Evaluation

Dose rate contributions from the bottom, in core, plenum and top regions, as appropriate, from 32 fuel assemblies are calculated with the MCNP Code [5.2] at various locations on and around the OS197L TC containing a fully loaded 32PT DSC.

The following shielding evaluation discussion specifically addresses the NUHOMS® 32PT DSC in an OS197L TC using the design-basis source terms described in the above sections.

W.5.4.1 Computer Program

MCNP [5.2] is a general-purpose Monte Carlo N-Particle code that can be used for neutron, photon, electron, or coupled neutron/photon/electron transport. The code treats an arbitrary three-dimensional configuration of materials in geometric cells bounded by first- and second-degree surfaces and some special fourth-degree surfaces. Pointwise (continuous energy) cross-section data are used. For neutrons, all reactions given in a particular cross-section evaluation are accounted for in the cross section set. For photons, the code takes account of incoherent and coherent scattering, the possibility of fluorescent emission after photoelectric absorption,

absorption in pair production with local emission of annihilation radiation, and bremsstrahlung. Important standard features that make MCNP very versatile and easy to use include a powerful general source; an extensive collection of cross-section data; and an extensive collection of variance reduction techniques that can be employed to track particles through very complex deep penetration problems. MCNP was employed to take advantage of its mesh tallies capabilities in calculating dose rates distributed over the surface of the TC.

W.5.4.2 Spatial Source Distribution

The source components are:

- *The neutron sources due to the active fuel region,*
- *The gamma source due to the active fuel region,*
- *The gamma source due to the plenum,*
- *The gamma source due to the top region, and*
- *The gamma source due to the bottom region.*

Axial peaking is accounted for in the active fuel region by inputting an axial shape, as discussed in Section W.5.2.4.

W.5.4.3 Cross Section Data

The cross-section data used is the continuous energy ENDF/B-VI provided with the MCNP code [5.2]. The cross-section data allows coupled neutron/gamma-ray dose rate evaluation to be made to account for secondary gamma (n,γ) radiation. All of the OS197L TC dose rate calculations account for the dose rate due to secondary gamma radiation.

W.5.4.4 Flux-to-Dose-Rate Conversion

The flux distribution calculated by the MCNP code is converted to dose rates using flux-to-dose rate conversion factors from ANSI/ANS-6.1.1-1977 [5.5] given in Appendix P, Table P.5-19. The same flux-to-dose rate conversion factors have been employed in the 32PT shielding analysis with the OS197 TC documented in Appendix M.5.

W.5.4.5 Methodology

The methodology used in the shielding analysis of the 32PT DSC in the OS197L TC is similar to the one employed in the 24PTH system described in Appendix P, Section P.5. The MCNP computer code was utilized to perform the shielding analyses. MCNP allows for explicit 3-D modeling of any shielding configuration and reduces the number of approximations needed in comparison to the 2-D codes. The methodology used herein is summarized below.

1. *Sources are developed for all fuel regions using the source term data described in Section*

W.5.2. Source regions include the active fuel region, bottom end fitting (including all materials below the active fuel region), plenum, and top end fitting (including all materials above the plenum region).

2. *Suitable shielding material densities are calculated for all regions modeled.*

3. *The 3-D Monte Carlo code MCNP is used to calculate dose rates on and around the OS19lL TC loaded with the bounding, from a shielding standpoint, fuel and DSC designs. The MCNP code is selected because of its ability to handle thick, multi-layered shields and account for streaming through the TC/DSC annulus and TC neutron shielding using 3-D geometry.*

4. *MCNP results are used to calculate occupational and offsite exposures (see Chapter W.10).*

5. *MCNP models are also generated to determine the effects of off-normal and accident scenarios, such as loss of cask neutron shield and the supplemental trailer shield for the OS197L TC.*

W.5.4.6 Assumptions

The following general assumptions are used in the analyses. Some of these assumptions are generic in nature and are similar to those employed to calculate the dose rates with the 24PTH system in Appendix P.

W.5.4.6.1 Source Term Assumptions

- *The primary neutron source in LWR spent fuel is the spontaneous fission of ^{244}Cm. For the ranges of exposures, enrichments, and cooling times in the fuel qualification tables, ^{244}Cm represents more than 85% of the total neutron source. The neutron spectrum is, therefore, relatively constant for the fuel parameters addressed herein and is assumed to follow the ^{244}Cm fission spectrum provided in Section W.5.2.3.*

- *Due to some operational evolutions (transfer of OS19L TC from decontamination area to transfer trailer) requiring the draining of the neutron shielding for the 32PT DSC, it further reinforces the assumption that the 32PT DSC with the bounding gamma dose rates provides for the design basis source terms.*

- *Surface gamma dose rates are calculated for the TC surfaces using the actual photon spectrum applicable for each case.*

W.5.4.6.2 OS197L TC Dose Rate Analysis Assumptions

- *The 32PT DSC is modeled in full 3D including the solid aluminum peripheral rails.*

- *The borated neutron absorber sheets in the 32PT DSC are modeled as aluminum.*

- *Axial peaking factors assumed as described in Section W.5.2.4.*

- *Fuel is homogenized within the fuel assembly perimeter, although the 32PT DSC basket is modeled explicitly.*

- *Axial dose rates during normal conditions of operation are not calculated and the results with the OS197 TC are directly applicable to the OS197L TC since there is no change in the axial shielding configurations of the OS197L TC compared to the OS197 TC.*

- *During the "pre-transfer" condition involving the placement and removal of a temporary cask cover, axial dose rates are calculated utilizing a 2" thick aluminum plate.*

- *For the design basis accident case, the cask neutron shield (water) along with the supplemental trailer shield is assumed to be lost.*

- *For the "beyond" design basis accident case, the neutron shield jacket (inner and outer steel skin) is also assumed to be lost in addition to the loss of the cask neutron shield (water) along with the supplemental trailer shield.*

W.5.4.7 Summary of the Calculational MCNP Models

The following is a summary of the various MCNP models utilized to obtain the results for the various loading and transfer configurations. All the models employ quarter-symmetry except those which model the OS197L TC in the trailer prior to placement of the top trailer shield where a half-symmetry model is employed. A brief description of the various shielding configurations evaluated herein in provided in Figure W.5-1. The basket and source layout geometry for the quarter-symmetry MCNP models is shown in Figure W.5-4. All the models include the 32PT DSC with design basis fuel assemblies and water is modeled in the DSC/TC annulus. All the dose rate results shown are radial dose rates unless explicitly specified as axial. For most configurations of loading and transfer the axial dose rate results from the OS197 calculations are directly applicable. The most conservative axial dose rates are due to the placement of the aluminum interim cask lid during the movement of the OS197L TC from the decontamination area to the transfer trailer. The dose rate results as a function of distance for various shielding configurations of the OS197L TC are also shown in Figure W.5-2. The various shielding configuration for which the dose rates are calculated are described below.

1. *OS197 TC under normal conditions with water in the neutron shield using the MCNP calculational methodology. The results for this case are shown in Table W.5-1 in the row corresponding to the "OS197 TC" transfer cask configuration.*

2. *OS197L TC without any supplemental shielding and with water in the neutron shield. The DSC is also assumed to be dry. This configuration is expected during the remote handling operations when the cask is lowered into the decontamination area shield. The summary results are Table W.5-1 in the row corresponding to the "OS197L TC Bare Cask" transfer cask configuration. Detailed results for this case are shown in Table W.5-5.*

3. *OS197L TC without any supplemental shielding and without water in the neutron shield. The aluminum interim cask lid is also included in the model. This configuration*

conservatively bounds that expected during the remote handling operations when the cask is lowered into the transfer trailer. The radial dose rate results for this case are shown in Table W.5-6. The axial dose rate results for this case are shown in Table W.5-8 and Table W.5-9 Geometric locations for axial dose rate calculations are shown in Figure W.5-3.

4. *Configuration is similar to 3, above, except that both the inner and outer liners of the neutron shielding are absent. This configuration provides for the worst case accident for shielding purposes and is considered a "beyond the design basis" accident. The results for this case are shown in Table W.5-2 under the "OS197L TC (Bare Cask without neutron shield shells)" transfer cask configuration.*

5. *OS197L TC with 2.5 inches of supplemental shielding and no water in the neutron shield. This configuration conservatively bounds that expected prior to commencement of transfer operations before filling of the neutron shield with water. This case represents the worst case from a dose rate calculation standpoint for the interim cask lid replacement operations. The radial dose rate results for this case are shown in Table W.5-12. The axial dose rates for this configuration without water in the neutron shield are conservatively obtained from results shown in Table W.5-6 and Table W.5-7. Geometric locations for axial dose rate calculations are shown in Figure W.5-3.*

6. *OS197L TC with 2.5 inches of supplemental trailer shielding in the upper half and 5.5 inches of supplemental trailer shielding in the lower half and water in the neutron shield. The trailer skid is also modeled including the absence of shielding at the bottom of the cask. The interim cask lid is included in the model. This configuration is expected prior to the installation of the additional 3 inches of the outer top supplemental trailer shielding prior to the commencement of transfer operations after the filling of the neutron shield with water. The MCNP model details including geometrical and material descriptions are shown in Figure W.5-5. The results for this case are shown in Table W.5-13. The axial dose rate results from configuration 5 are conservatively applied to this configuration.*

7. *OS197L TC with 5.5 inches of supplemental trailer shielding and with water in the neutron shield. This is the transfer configuration under normal conditions and bounds that during decontamination operations since credit is taken for 5.5 inches of supplemental trailer shielding instead of 6.0 inches for the decontamination area shield. The results for this case are shown in Table W.5-10.*

8. *Configuration is similar to 7, above, except that there is no water in the neutron shield. This represents a loss of neutron shielding accident during transfer operations with the supplemental trailer shield present. The results for this case are shown in Table W.5-11.*

W.5.4.8 Normal Condition Models

Various MCNP models are developed to perform the shielding evaluation of the 32PT DSC in the OS19L TC. Normal conditions include the 32PT DSC, the OS197L TC with the water filled neutron shield and 5.5 inches of supplemental trailer shielding. Due to the capability of

modeling complex geometry in 3-D, several modeling conservatisms, originally employed in the 2-D DORT calculations (Section M.5 for 32PT DSC) are eliminated. The resulting MCNP model is also employed to determine the dose rates on an around the OS197 TC for comparison. These results are shown in Table W.5-1. The main differences between the MCNP calculational model of the 32PT DSC with fuel assemblies utilized herein and the DORT calculational model utilized in Appendix M, Section M.5 are listed below:

- *Fuel assemblies are modeled as homogenized only within the discreet fuel compartments in MCNP instead of being homogenized in two radial zones of the basket in DORT*
- *Due to the ability to model the geometry in 3D, the fuel assembly source terms are applied to the appropriate fuel assemblies (based on the 32PT zone loading configurations) in MCNP instead of the smeared outer "zone" in DORT*
- *The basket periphery is modeled with solid aluminum to account for aluminum rails in MCNP instead of air in DORT*

The computational models with the OS197L TC are described in the subsequent sections.

W.5.4.8.1 *<u>32PT DSC in OS197L TC</u>*

Two three-dimensional MCNP models with quarter-symmetry are employed for shielding analyses of the 32PT DSC within an OS19L TC: one model for neutrons and the other for gammas. The z-axis in the MCNP models coincides with the axis of rotation of the cask and the 32PT DSC. The MCNP geometry of the DSC basket structure and the source representation is shown in Figure W.5-4 where the lattice cell (2 1 0) and (1 2 0) are loaded with 1.2 kW/FA assemblies. The other cells are loaded with 0.6 kW/FA assembly. Select features within the cask and on its surface are neglected because they produce only localized effects and have minimal impact on operational dose rates. Examples of neglected features include the relief valves, clevises, and eyebolts. The TC trunnions are not explicitly modeled, however, a sensitivity evaluation on the effect of trunnion design is discussed in Section W.5.4.7.2. For the purpose of this evaluation, the trunnions represent areas of increased gamma shielding and are located in regions of relatively low importance for shielding.

In addition, a separate set of 3D MCNP models, similar to the calculational 2D DORT models (Appendix M, Section M.5 of the UFSAR) for the 32PT DSC in the OS197 TC, are also employed for comparison. These models provide a measure of the amount of conservatism present in the DORT models.

Design features relevant to the shielding analysis of the OS197L TC and 32PT DSC are modeled in MCNP. The cask shell is modeled with a thickness of 2.68", the neutron shield inner and outer shells is modeled with thicknesses of 0.26"and 0.19", respectively with a liquid water neuron shield thickness of 3.00". The effect of the two-piece neutron shield on the normal condition dose rates is discussed in Section W.5.4.7.3.

The supplemental trailer shielding is modeled as a cylinder with full design thickness to determine transfer condition dose rates. The results of these evaluations are provided in Table

W.5-10 and Table W.5-11. In addition, calculations are performed to determine the dose rates as a function of distance during normal transfer operations with only the inner top trailer shielding installed. The MCNP model description for this configuration is provided in Figure W.5-5 . These results are shown in Table W.5-13 and Table W.5-14.

The normal condition dose rate results are compared to those for the 32PT DSC/OS197 TC DORT calculations documented in Appendix M, Section M.5 and the results for the 32PT DSC/OS197 TC MCNP calculations. The results summarized in Table W.5-1 indicate that the OS197L TC, with the supplementary trailer shielding, provides for improved shielding under normal conditions. This means that the dose rates on the outer surface of the trailer shield are lower than the dose rates on the outer surface of the OS197 TC. The dose rate results as a function of distance for various shielding configurations of the OS197L TC are also shown in Figure W.5-2.

W.5.4.8.2 Solid One Piece Trunnion Dose Rate Evaluation

Analyses are performed to compare the effect of the solid steel trunnion design to the original trunnion design (multiple pieces) which used NS-3 neutron absorber to reduce neutron dose. The result of this analysis indicates that this change does result in an increase in neutron dose, however, since the majority of the dose contribution is gamma; the overall dose is reduced in the solid steel trunnion configuration. A comparison of the dose rates is provided in *Table W.5-3.*

In summary, the use of a one-piece trunnion reduces the total calculated dose rate by a factor greater than ten, thus providing a beneficial impact on occupational dose rates.

W.5.4.8.3 Removable Two Piece Neutron Shield Dose Rate Evaluation

The two piece neutron shield provides the same level of shielding as the OS197 TC neutron shield. The water cavity thickness is unchanged. The outer shell of the OS197L TC neutron shield is slightly thicker than that used in the OS197 TC (*0.25"* versus *0.18"*). The addition of the seam between the two halves would reduce gamma dose in the vicinity of the seam but would increase neutron dose due to less water in the vicinity. As discussed for the trunnion modification above, since the total dose is primarily gamma, the increase in steel will result in a net decrease in total dose in the vicinity of the seams.

The seam between the two halves of the neutron shield is 1.5 inches wide and is "filled" with 3 inches of steel instead of water. The maximum dose rate at the surface of the OS197L cask with water in the neutron shield, from Table W.5-1, is approximately 54,000 mrem/hour. The maximum dose rate at the surface of the OS197L cask in the vicinity of the seams, from Table W.5-12, is approximately 4,000 mrem/hour. This dose rate is calculated with a model that utilizes a temporary shielding of 2.5 inches with no water in the annulus and neutron shielding. The radial dose rate results with this model are shown in Table W.5-12. These results are conservative since the thickness of the seams is 3.00" instead of 2.5". These results demonstrate that there is a substantial dose rate reduction in the vicinity of the seams since the dose rate distribution on and around the cask are dominated (>95%) by gamma sources.

W.5.4.9 Accident Models

Accident condition models are those where the OS197L cask and its contents (32PT DSC with design basis fuel) are modeled with loss of shielding arising out of hypothetical accident conditions. Loss of water in the neutron shielding is the most common consequence of these accidents. The accident condition MCNP models are similar to the normal condition MCNP models except that the material that is "lost" is replaced with air.

The radial dose rates as a function of distance for selected distances are summarized in Table W.5-2. The axial dose rates for the various accident configurations are calculated for the bare cask with the aluminum interim cask lid to be applicable to all configurations and are shown in Table W.5-8 and Table W.5-9. These accident configurations are described below:

- *The first configuration involves the OS197L cask in the supplemental trailer shielding with loss of water in the neutron shield. This configuration is the "normal" accident configuration. Detailed radial dose rate results for this configuration are shown in Table W.5-11.*

- *The second configuration involves the OS197L cask in the supplemental trailer shielding with loss of outer top supplemental trailer shielding and water in the neutron shield. This configuration is the "off-normal" accident configuration. Detailed radial dose rate results for this configuration are shown in Table W.5-12.*

- *The third configuration involves the OS197L bare cask with loss of supplemental trailer shielding and loss water in the neutron shielding. This configuration can only occur during the handling of a bare cask with loaded fuel and is not likely to occur during transfer operations. This configuration also bounds the fire and cask drop accidents described in Chapter W.11. Detailed radial dose rate results for this configuration are shown in Table W.5-6.*

- *The fourth configuration involves a "beyond" the design basis accident which further assumes the loss of inner and outer neutron steel shells (liners) in addition to the loss of supplemental trailer shielding and loss water in the neutron shielding as described above. This configuration has not been evaluated in accident dose rate calculation with any other transfer cask design and is evaluated herein for conservatism. Radial dose rate results for this configuration are shown in Table W.5-2.*

The accident condition dose rate results are compared to those for the 32PT DSC/OS197 TC DORT calculations documented in Appendix M, Section M.5 and the results for the 32PT DSC/OS197 TC MCNP calculations. These dose rates are also shown in Table W.5-2.

W.5.4.10 OS197L TC Models During Fuel Loading and Transfer Operations

MCNP models are developed for the various operational evolutions during fuel loading and transfer using the 32PT DSC. For most of the operational sequences, water is always present in the DSC/TC annulus, however, the dose rates are calculated using models that, conservatively,

do not credit the presence of water in the annulus. These operational sequences and their modeling are described below:

W.5.4.10.1 *TC Loading and Placement in Decontamination Area*

This operation involves the loading of fuel in the 32PT DSC and the movement of the loaded DSC in the OS197L TC to the decontamination area that houses the 6" supplemental decontamination area shielding. The decontamination area shielding is a two-piece shielding structure where the upper portion (shield bell) is placed after the OS197L with the loaded DSC is placed into the lower portion of the shielding. The DSC cavity contains water while the DSC/TC annulus and the TC neutron shield are filled with water. The actual lifting and transfer operations are performed using remote crane operation using a laser/optical targeting system and cameras for confirmation of the cask location without the need for personnel in the vicinity of the cask. Should a failure of the crane occur during these operations, procedures will be in place to either repair the crane using proper ALARA practices and resume remote operations, or manually position the load in a, safe, shielded location. Therefore, the dose received by operations personnel resulting from this high dose operation will be minimal as these operations are short duration and are performed remotely with no personnel in the vicinity. *The applicable dose rate distributions for estimating the dose rates for ALARA planning of repair and recovery operations during malfunctions are shown in Table W.5-6 and Table W.5-7 in the radial direction and Table W.5-8 and Table W.5-9 in the axial direction.*

W.5.4.10.2 *Cask Decontamination*

The 32PT DSC and the OS197L TC are placed inside the decontamination area shield. The 32PT DSC top shield plug is assumed to be in place and the DSC/TC annulus and the neutron shielding are filled with water. This is identical to the decontamination operation documented in Appendix M, Section M.5 for the 32PT DSC/OS197 TC in the axial direction. Therefore, the axial dose rate results from Appendix M, Figure M.5-26 are directly applicable. The only additional step that is not evaluated is the operation involving the "inspection" of the upper and lower openings of the decontamination area shielding for blockage. The maximum radial surface dose rates for normal conditions at the axial locations of these openings are conservatively utilized to determine the dose rates for this operation. The radial dose rates as a function of axial height for a bare OS197L cask (with and without water in the neutron shield) is shown in Table W.5-7 and is utilized to determine the dose rates at the upper and lower openings of the decontamination area shield.

W.5.4.10.3 *Welding Operations*

The 32PT DSC and the OS197L TC are still inside the decontamination shield area. The 32PT DSC top shield plug and inner top cover plate are assumed to be in place for inner top cover welding operation. The DSC cavity is dry and the DSC/TC annulus and the neutron shielding are filled with water. Temporary shielding consisting of three inches of NS-3 and one inch of steel is assumed to cover the 32PT DSC inner top cover plate. In addition, the DSC outer top cover plate is not present. This is identical to the inner top cover welding operation documented in Appendix M, Section M.5 for the 32PT DSC/ OS197 TC in the axial direction. Therefore, the axial dose rate results from Appendix M, Figure M.5-27 are directly applicable.

W.5.4.10.4 *TC Placement in the Transfer Trailer*

Following welding and sealing of the DSC, the TC is lifted and placed horizontally on the transfer trailer containing the supplemental trailer shielding. The supplemental trailer shielding is a three-piece shielding configuration consisting of a 5.5" "lower" shielding attached to the trailer where the TC is lowered. Subsequently, the 2.5" "inner" top shielding encloses the TC and prepares the system for transfer. During this operation, the TC neutron shield is empty and a temporary 2" aluminum cask lid consisting is utilized for weight management. An MCNP model, employing half-symmetry, representing this configuration is utilized to determine the dose rates as a function of distance. This model also considers the absence of shielding at the bottom of the trailer shield as described in the drawings from Section W.1.0. The MCNP model details including geometrical and material descriptions are shown in Figure W.5-5. The radial dose rate results for this configuration below the cask support skid (shown as "LOCATION A" in Figure W.5-5, Section B-B) are shown in Table W.5-13. The dose rates below the cask support skid are expected to be maximized, in particular at closer distances, because of the absence of shielding between the trailer deck and trailer shield. The results demonstrate that this effect diminishes with distance and at distances greater than 2m the dose rate peaking is minimized. The radial dose rate results for this configuration above the cask support skid (shown as "LOCATION B" in Figure W.5-5, Section B-B) are shown in Table W.5-14. The maximum dose rate at 100m prior to the installation of the outer trailer shielding is 0.26 mrem/hour thereby ensuring that off-site doses are not significantly affected during the placement of the upper top trailer shielding.

As discussed in Section W.5.9.1, the actual lifting and transfer operations are performed using remote crane operation using cameras for confirmation of the cask location without the need for personnel in the vicinity of the cask. Should a failure of the crane occur during these operations, procedures will be in place to either repair the crane using proper ALARA practices and resume remote operations, or manually position the load in a safe, shielded, location. Therefore, the dose received by operations personnel resulting from this high dose operation will be minimal as these operations are short duration and are performed remotely with no personnel in the vicinity. The applicable dose rate distributions for estimating the dose rates for ALARA planning of repair and recovery operations during malfunctions are shown in Table W.5-6 and Table W.5-7 in the radial direction and Table W.5-8 and Table W.5-9 in the axial direction. The axial dose rate calculations assume that both the DSC/TC annulus and the neutron shielding are dry with the interim cask lid modeled as described above. Geometric locations for axial dose rate calculations are shown in Figure W.5-3. The dose rate distribution for accidental configurations during these operations bound those during decontamination because of the absence of water in the neutron shield. Once the TC is placed on the transfer trailer, the neutron shield is filled with water and therefore, the normal condition dose rates during this operation also include water in the neutron shield. The results of these calculations are shown in Table W.5-13 and Table W.5-14 as discussed previously.

W.5.4.10.5 *Cask Transfer to ISFSI Operations*

These operations are performed outside the fuel building when the DSC is actually transferred to the HSM. For this purpose, the neutron shielding is filled with water and the actual cask lid is in place. The additional 3" of "outer" top shielding is also in place. The loss of neutron shielding

accident or the loss of "outer" shielding accidents are bounded by the dose rates calculated for the "pre-transfer" operations described in Section W.5.4.10.4. The dose rates are calculated assuming that the OS197L cask is completely enclosed by supplemental trailer shielding. The results for this configuration are shown in Table W.5-10 for a configuration with water in the neutron shield and in Table W.5-11 for a configuration without water in the neutron shield. The axial dose rates for this configuration without water in the neutron shield are conservatively obtained from results shown in Table W.5-8 and Table W.5-9.

W.5.5 References

5.1 *Oak Ridge National Laboratory, RSIC Computer Code Collection, "SCALE: A Modular Code System for Performing Standardized Computer Analysis for Licensing Evaluations for Workstations and Personal Computers," NUREG/CR-0200, Revision 6, ORNL/NUREG/CSD-2/V2/R6.*

5.2 A General Monte Carlo N-Particle Transport Code, Version 5, Volume II: User's Guide, LA-CP-03-0245, 2003.

5.3 One-Dimensional Discrete Ordinates Transport Code System with Anisotropic Scattering," CCC-254, Oak Ridge National Laboratory, RSICC Computer Code Collection, April 1991.

5.4 CASK-81 - 22 Neutron, 18 Gamma-Ray Group, P3, Cross Sections for Shipping Cask Analysis," DLC-23, Oak Ridge National Laboratory, RSIC Data Library Collection, June 1987.

5.5 "American National Standard Neutron and Gamma-Ray Flux-to-Dose Rate Factors," ANSI/ANS-6.1.1-1977, American Nuclear Society, LaGrange Park, Illinois, March 1977.

Table W.5-1
OS197L TC Normal Condition Dose Rates

Transfer Cask Configuration	Dose Rate Component	*Dose Rates (mrem/hour) at Different Distances from Side Surface Normal Condition – Water in Neutron Shield*			
		On Side Surface	**4.57 meters (15'**	**100 meters**	**609.9 meters (2000')**
UFSAR (Table M.5-5 and Section M.11.2.5.3)	Neutron	261	Not Calc.	Not Calc.	Not Calc.
	Gamma	784	Not Calc.	Not Calc.	Not Calc
	Total	950	Not Calc	Not Calc	0.01
OS197 TC	Neutron	102	7.20	0.006	7.09e-6
	Gamma	248	20.3	0.03	5.29e-5
	Total	346	25.9	0.03	5.67e-5
OS197L TC Bare Cask	Neutron	247	18.2	0.018	2.19e-5
	Gamma	53,031	3906	4.52	9.70e-3
	Total	53,249	3922	4.53	9.70e-3
OS197L TC with Decon*tamination* Area or *Supplemental* Trailer Shielding	Neutron	28	2	0.002	1.31e-6
	Gamma	94	11	0.02	2.44e-5
	Total	122	13	0.02	2.57e-5
OS197L TC without the Outer Top Supplemental Trailer Shielding	*Neutron*	*24.8*	*3.4*	*0.01*	*7.8e-5*
	Gamma	*184*	*106*	*0.24*	*1.4e-3*
	Total	*202*	*109*	*0.26*	*1.5e-3*

Table W.5-2
OS197L TC Accident Condition Dose Rates

Transfer Cask Configuration	Dose Rate Component	Dose Rates (mrem/hour) at Different Distances from Side Surface Accident Condition – No Water in Neutron Shield			
		On Side Surface	4.57 meters (15')	100 meters	609.9 meters (2000')
UFSAR[1] (Table M.11-2)	Neutron	3,780	Not Calc.	Not Calc.	Not Calc.
	Gamma	1,070	Not Calc.	Not Calc.	Not Calc
	Total	4,640	Not Calc	Not Calc	0.01
OS197 TC[1]	Neutron	1,282	66	0.067	1.87E-5
	Gamma	291	30	0.04	5.14E-5
	Total	1573	84	0.10	6.48E-5
OS197L TC[1] (with Supplemental Inner & Outer Trailer Shielding)	Neutron	537	35	0.03	7.15E-6
	Gamma	145	18	0.03	3.98E-5
	Total	678	52	0.06	4.42E-5
OS197L TC[1] (with Supplemental Inner Trailer Shielding Only)	Neutron	860	49	0.11	7.97E-5
	Gamma	3090	280	0.60	8.47E-4
	Total	3939	329	0.70	9.22E-4
OS197L TC[1] (Bare Cask)	Neutron	3,176	157	0.17	8.18E-5
	Gamma	83,570	6,999	7.84	1.80E-2
	Total	86,691	7,152	8.00	1.81E-2
OS197L TC (Bare Cask without neutron shield shells)	Neutron	3,691	187	0.20	1.06E-4
	Gamma	134,328	11,576	12.7	3.19E-2
	Total	138,019	11,763	12.9	3.20E-2

(1) Neutron shield shell(s) credited in the calculations

Table W.5-3
Dose Rate Results for Two Trunnion Designs (mrem/hr)

Trunnion Type	Neutron Dose Rate	Gamma Dose Rate	Total Dose Rate
Original Upper	0.2	621	**621.2**
Solid Steel Upper	51.1	.14	**51.24**
Original Lower	1.0	1702	**1703**
Solid Steel Lower	79.5	1.3	**80.8**

Table W.5-4
Primary Gamma Source Spectrum for Design Basis 32PT and 24PHB Fuel

Group Upper Limit, (MeV)	In-Core Primary Gamma Source Spectrum	
	32PT DSC	24PHB DSC
1.00E+01	0.00000	0.00000
8.00E+00	0.00000	0.00000
6.50E+00	0.00000	0.00000
5.00E+00	0.00000	0.00000
4.00E+00	0.00000	0.00000
3.00E+00	0.00001	0.00001
2.50E+00	0.00042	0.00026
2.00E+00	0.00019	0.00014
1.66E+00	0.00914	0.00901
1.33E+00	0.03132	0.03194
1.00E+00	0.05024	0.05007
8.00E-01	0.35502	0.38075
6.00E-01	0.11804	0.11255
4.00E-01	0.01001	0.00902
3.00E-01	0.01420	0.01321
2.00E-01	0.05008	0.04630
1.00E-01	0.06164	0.05816
5.00E-02	0.29968	0.29010
Total Source Terms (γ/sec/FA)	**7.08E+15**	**7.17E+15**

Table W.5-5
Radial Dose Rates for the Bare OS197L TC
(Water in Neutron Shield)

Distance from TC Side, m	Neutron Radiation		Gamma Radiation		Total Radiation	
	Dose Rate, mrem/hr	Relative Error	Dose Rate, mrem/hr	Relative Error	Dose Rate, mrem/hr	Relative Error
0	247.54	0.04	53,031.83	0.05	53,249.75	0.05
1	104.19	0.01	22,215.78	0.01	22,319.97	0.01
2	54.61	0.01	12,539.20	0.01	12,593.37	0.01
3	32.78	0.01	7,899.42	0.01	7,931.95	0.02
4.57 (15')	18.19	0.02	3,905.74	0.04	3,921.85	0.04
10	4.44	0.02	1,135.78	0.02	1,140.02	0.04
50.8 (2000")	0.12	0.04	41.09	0.04	41.21	0.05
100	0.018	0.10	4.52	0.07	4.53	0.07
200	2.02E-03	0.20	0.593	0.23	0.594	0.23
300	4.31E-04	0.44	0.150	0.37	0.150	0.37
609.6 (2000')	2.19E-05	0.61	9.70E-03	0.69	9.70E-03	0.69

Table W.5-6
Radial Dose Rates for the Bare OS197L TC
(No Water in Neutron Shield)

Distance from TC Side, m	Neutron Radiation		Gamma Radiation		Total Radiation	
	Dose Rate, mrem/hr	Relative Error	Dose Rate, mrem/hr	Relative Error	Dose Rate, mrem/hr	Relative Error
0	3,176.08	0.02	83,570.33	0.06	86,690.95	0.06
1	1,083.30	0.01	34,880.97	0.02	35,916.22	0.02
2	519.54	0.01	19,961.23	0.02	20,465.33	0.02
3	299.64	0.01	12,344.10	0.02	12,639.57	0.02
4.57 (15')	157.33	0.01	6,999.14	0.02	7,151.74	0.02
10	38.39	0.01	1,848.27	0.03	1,886.26	0.03
50.8 (2000")	1.13	0.03	66.79	0.05	67.88	0.05
100	0.170	0.09	7.84	0.10	8.00	0.10
200	1.58E-02	0.07	0.983	0.24	0.996	0.23
300	3.25E-03	0.10	0.245	0.39	0.248	0.39
609.6 (2000')	8.18E-05	0.55	1.80E-02	0.63	1.81E-02	0.63

Table W.5-7
Radial Dose Rates for the OS197L TC as a Function of Axial Height

Axial Distance from TC Bottom, (cm)	Bare Cask Dose Rates (mrem/hour) with Water in Neutron Shield		Bare Cask Dose Rates (mrem/hour) without Water in Neutron Shield	
	Surface	1 M from Surface	Surface	1 M from Surface
2.5	74.6	1,796	139	2,737
16.5	82.6	2,297	199	3,573
39.5	798	3,452	1,322	5,492
62.5	10,266	5,005	15,567	7,817
85.5	16,072	6,712	23,524	10,512
108.5	20,388	8,269	32,499	13,385
131.5	25,551	9,853	41,390	15,643
154.5	28,618	10,805	46,925	17,219
177.5	30,309	11,740	47,958	19,276
200.5	30,539	12,238	50,198	20,536
223.5	30,408	12,840	51,018	21,088
246.5	31,229	13,083	50,500	20,926
269.5	30,592	13,078	50,301	20,924
292.5	30,678	12,921	49,311	20,859
315.5	30,628	12,658	49,369	20,573
338.5	30,201	12,166	47,418	19,650
361.5	30,202	11,416	47,898	18,469
384.5	28,677	10,636	46,392	16,765
407.5	25,231	9,493	38,715	15,114
430.5	15,380	7,973	24,086	12,540
453.5	13,810	6,519	21,047	9,996
476.5	12,452	5,037	18,601	7,853
499.5	4,408	3,641	7,487	5,859
522.5	682	2,555	1,478	4,158
545.5	63.3	1,670	177	2,745
568.5	43.0	1,109	93.4	1,834
Average	**19,395**	**8,382**	**31,021**	**13,467**

Note: Bottom of the TC is at 0 cm. Top of the TC is at 500 cm.
The Top Vents for the decontamination shield are located at 525 cm.

Table W.5-8
Axial Neutron Dose Rates for the OS197L TC with Interim Cask Lid (No Water in Neutron Shield)

R=Radial Position	Absolute maximum R<18 ft		On TC Axis R=0.0		Maximum R<=TC Radius	
H=Distance from TC Top, m	Dose Rate, mrem/hr	Relative Error	Dose Rate, mrem/hr	Relative Error	Dose Rate, mrem/hr	Relative Error
0	205.2	0.16	68.8	0.03	102.2	0.005
1	99.6	0.02	31.2	0.02	35.0	0.01
2	61.8	0.02	17.5	0.03	20.0	0.02
3	43.5	0.02	11.6	0.04	13.0	0.02
4.57(15')	27.2	0.03	7.3	0.05	8.1	0.03
10	7.9	0.03	2.6	0.08	3.1	0.02
50.8 (2000")	0.66	0.009	0.66	0.02	0.66	0.01
100	0.24	0.01	0.24	0.02	0.24	0.01
200	0.06	0.01	0.06	0.02	0.06	0.01
300	0.02	0.01	0.02	0.02	0.02	0.01
609.6 (2000')	1.05E-03	0.02	1.05E-03	0.06	1.05E-03	0.02

Note: See Figure W.5-3 for a description of the axial geometry

Table W.5-9
Axial Gamma Dose Rates for the OS197L TC with Interim Cask Lid (No Water in Neutron Shield)

R=Radial Position	Absolute maximum R<18 ft		On TC Axis R=0.0		Maximum R<=TC Radius	
H=Distance from TC Top, m	Dose Rate, mrem/hr	Relative Error	Dose Rate, mrem/hr	Relative Error	Dose Rate, mrem/hr	Relative Error
0	5364.9	0.01	116.4	0.08	718.6	0.02
1	2336.2	0.02	135.9	0.04	226.4	0.02
2	1348.1	0.01	87.4	0.05	152.5	0.01
3	791.6	0.01	70.1	0.05	122.1	0.02
4.57(15')	399.9	0.01	52.8	0.07	91.4	0.02
10	84.9	0.01	26.9	0.07	49.3	0.05
50.8 (2000")	4.4	0.01	4.4	0.01	4.4	0.01
100	1.7	0.01	1.7	0.01	1.7	0.01
200	0.50	0.03	0.50	0.03	0.50	0.03
300	0.17	0.01	0.17	0.01	0.17	0.01
609.6 (2000')	9.66E-03	0.29	9.66E-03	0.29	9.66E-03	0.29

Note: See Figure W.5-3 for a description of the axial geometry

Table W.5-10
OS197 L TC Radial Dose Rates with 5.5" Supplemental Trailer Shielding (Water in Neutron Shield)

Distance from TC Side, m	Neutron Radiation		Gamma Radiation		Total Radiation	
	Dose Rate, mrem/hr	Relative Error	Dose Rate, mrem/hr	Relative Error	Dose Rate, mrem/hr	Relative Error
0	28.27	0.02	93.66	0.05	121.19	0.04
1	11.55	0.01	46.91	0.01	58.27	0.01
2	6.13	0.01	28.70	0.01	34.83	0.01
3	3.69	0.01	19.09	0.01	22.78	0.01
4.57 (15')	1.98	0.01	11.25	0.03	13.02	0.03
10	0.52	0.01	3.20	0.01	3.72	0.02
50.8 (2000")	0.02	0.03	0.12	0.05	0.14	0.05
100	0.002	0.03	0.02	0.07	0.02	0.07
200	2.08E-04	0.07	0.002	0.11	0.003	0.10
300	4.51E-05	0.18	0.001	0.28	0.001	0.10
609.6 (2000')	1.31E-06	0.50	2.44E-05	0.28	2.57E-05	0.26

Table W.5-11
OS197 L TC Radial Dose Rates with 5.5" Supplemental Trailer Shielding (No Water in Neutron Shield)

Distance from TC Side, m	Neutron Radiation		Gamma Radiation		Total Radiation	
	Dose Rate, mrem/hr	Relative Error	Dose Rate, mrem/hr	Relative Error	Dose Rate, mrem/hr	Relative Error
0	537.08	0.01	145.20	0.05	675.94	0.01
1	206.66	0.002	73.94	0.01	280.60	0.003
2	107.40	0.002	44.79	0.01	152.16	0.003
3	64.24	0.002	29.87	0.01	94.11	0.003
4.57 (15')	34.51	0.003	17.56	0.01	52.07	0.004
10	8.91	0.003	4.96	0.01	13.82	0.00
50.8 (2000")	0.26	0.01	0.20	0.06	0.45	0.01
100	0.033	0.01	0.03	0.05	0.06	0.02
200	2.63E-03	0.05	0.003	0.08	0.006	0.05
300	4.45E-04	0.11	0.001	0.18	0.001	0.12
609.6 (2000')	7.15E-06	0.26	3.98E-05	0.36	4.42E-05	0.33

Table W.5-12
OS197 L TC Radial Dose Rates with 2.5" Supplemental Inner Top Trailer Shielding (No Water in Neutron Shield)

Distance from TC Side, m	Neutron Radiation		Gamma Radiation		Total Radiation	
	Dose Rate, mrem/hr	Relative Error	Dose Rate, mrem/hr	Relative Error	Dose Rate, mrem/hr	Relative Error
0	860.2	0.003	3090.1	0.01	3938.9	0.01
1	304.7	0.002	1365.5	0.004	1670.3	0.004
2	154.7	0.002	779.5	0.005	933.5	0.004
3	91.6	0.003	499.3	0.01	590.8	0.005
4.57 (15')	49.1	0.003	280.4	0.01	329.3	0.01
10	13.0	0.004	75.7	0.01	88.6	0.01
50.8 (2000")	0.53	0.003	2.7	0.01	3.2	0.01
100	0.11	0.003	0.6	0.01	0.7	0.01
200	0.01	0.01	0.1	0.01	0.1	0.01
300	3.47E-03	0.01	0.02	0.01	0.03	0.01
609.6 (2000')	7.97E-05	0.04	8.47E-04	0.03	9.22E-04	0.03

Table W.5-13
OS197 L TC Radial Dose Rates below Cask Support Skid
(Prior to Installation of Outer Top Supplemental Trailer Shielding)

Distance from TC Side, m	Neutron Radiation		Gamma Radiation		Total Radiation	
	Dose Rate, mrem/hr	Relative Error	Dose Rate, mrem/hr	Relative Error	Dose Rate, mrem/hr	Relative Error
0	50.4	0.02	9436.9	0.01	9487.3	0.01
1	17.1	0.02	2287.1	0.01	2304.2	0.01
2	7.3	0.02	325.0	0.01	332.0	0.01
3	4.8	0.02	127.4	0.01	131.9	0.01
4.57 (15')	2.8	0.02	63.1	0.01	65.9	0.01
10	0.9	0.04	20.5	0.07	21.4	0.06
50.8 (2000")	0.04	0.02	1.0	0.01	1.1	0.01
100	0.01	0.04	0.24	0.02	0.26	0.02
200	0.002	0.07	0.04	0.02	0.04	0.02
300	0.001	0.28	0.01	0.03	0.01	0.04
609.6 (2000')	2.51E-05	0.56	3.23E-04	0.08	3.48E-04	0.09

Table W.5-14
OS197 L TC Radial Dose Rates above Cask Support Skid
(Prior to Installation of Outer Top Supplemental Trailer Shielding)

Distance from TC Side, m	Neutron Radiation		Gamma Radiation		Total Radiation	
	Dose Rate, mrem/hr	Relative Error	Dose Rate, mrem/hr	Relative Error	Dose Rate, mrem/hr	Relative Error
0	24.8	0.02	183.7	0.01	202.2	0.01
1	14.7	0.01	361.6	0.01	374.7	0.01
2	8.9	0.01	227.6	0.01	236.4	0.01
3	5.8	0.02	171.9	0.01	177.8	0.01
4.57 (15')	3.4	0.02	105.9	0.01	109.3	0.01
10	1.0	0.05	30.3	0.03	31.1	0.03
50.8 (2000")	0.05	0.02	1.1	0.01	1.1	0.01
100	0.01	0.03	0.24	0.01	0.26	0.01
200	0.002	0.07	0.04	0.04	0.05	0.04
300	0.001	0.10	0.01	0.07	0.01	0.07
609.6 (2000')	1.34E-05	0.50	3.27E-04	0.07	3.41E-04	0.07

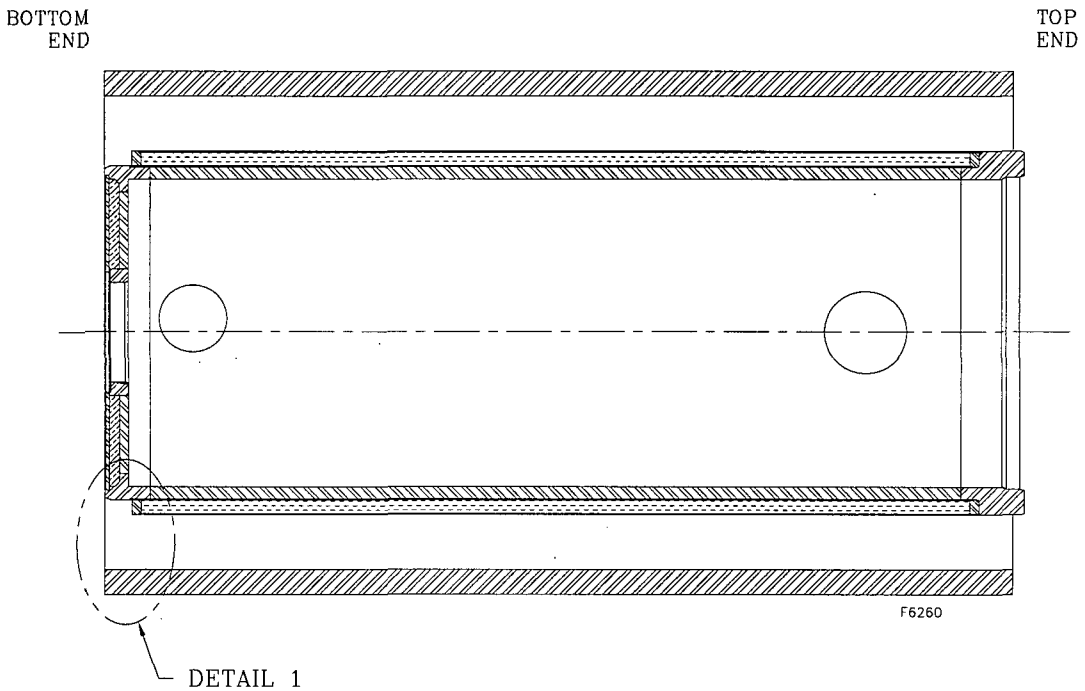

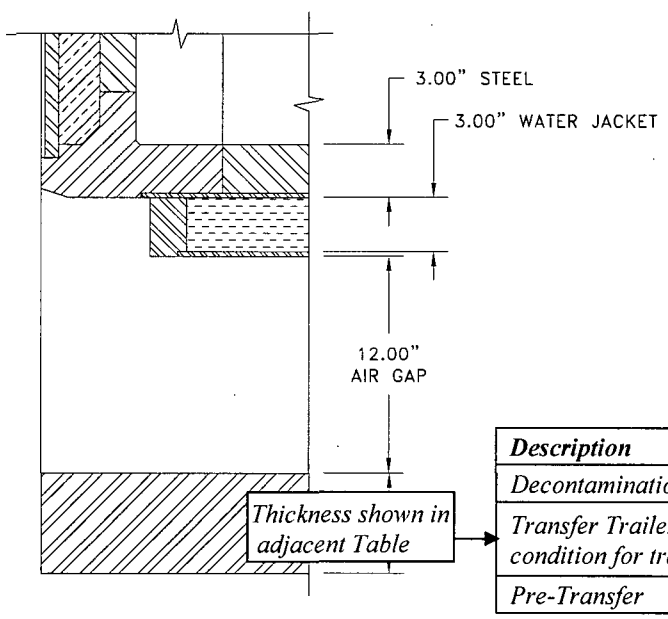

Description	*Steel Thickness*
Decontamination	*6.0", conservatively used 5.5"*
Transfer Trailer (normal condition for transfer)	*5.5"*
Pre-Transfer	*2.5" (simple model)*

DETAIL 1

Figure W.5-1
OS197L TC *MCNP Shielding Configuration Description*

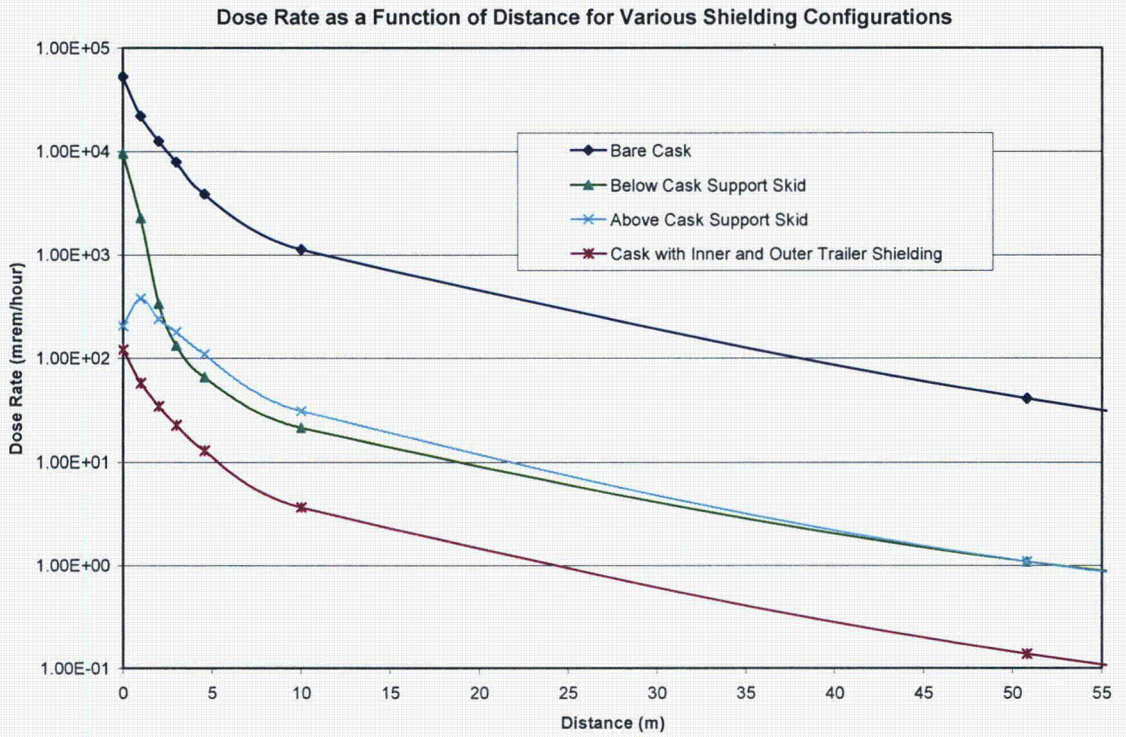

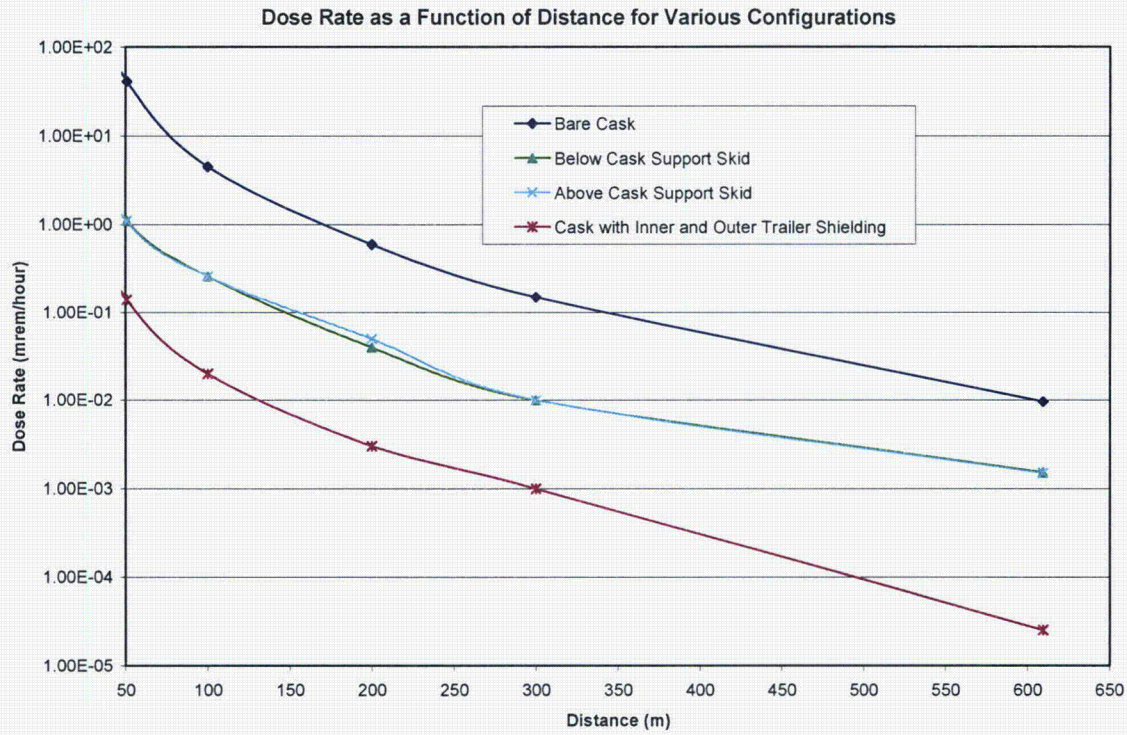

Figure W.5-2
MCNP Radial Dose Rate Results for the Various OS197L TC Shielding Configurations

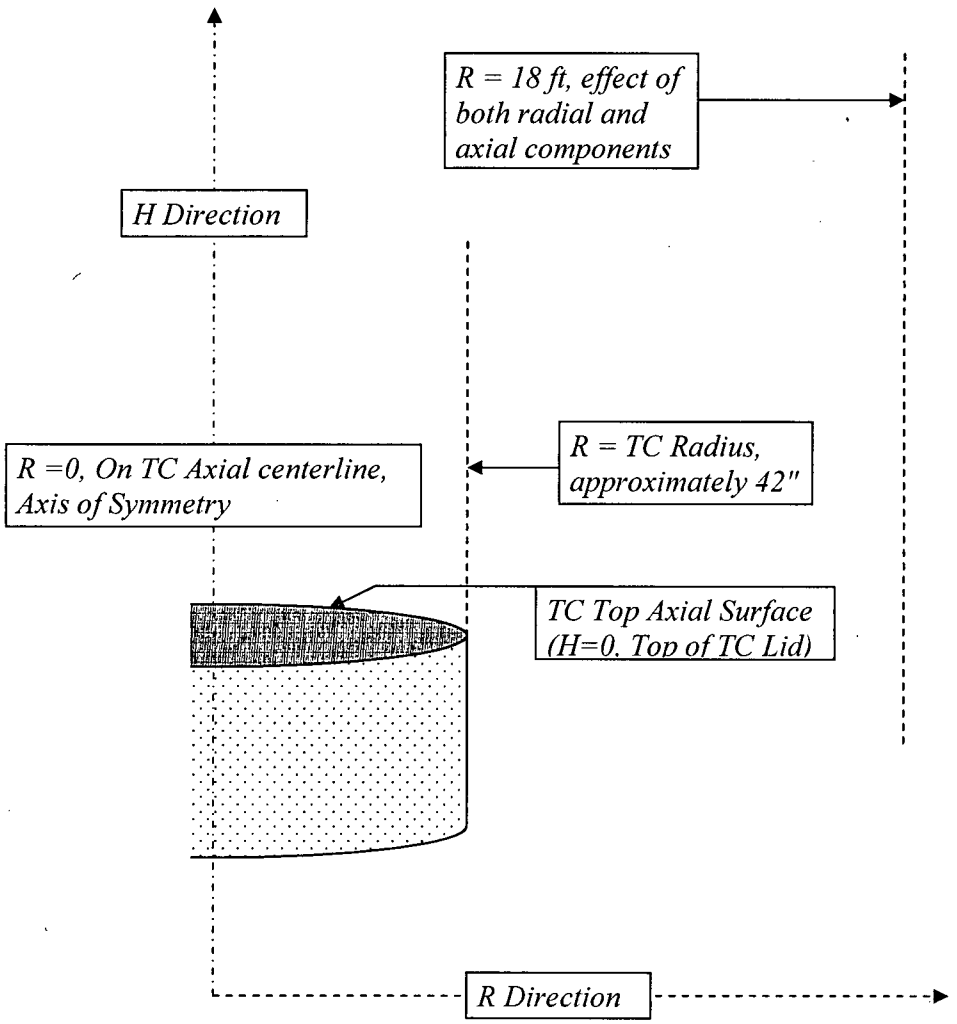

Figure W.5-3
Geometrical Layout for OS197L Axial Dose Rate Calculations

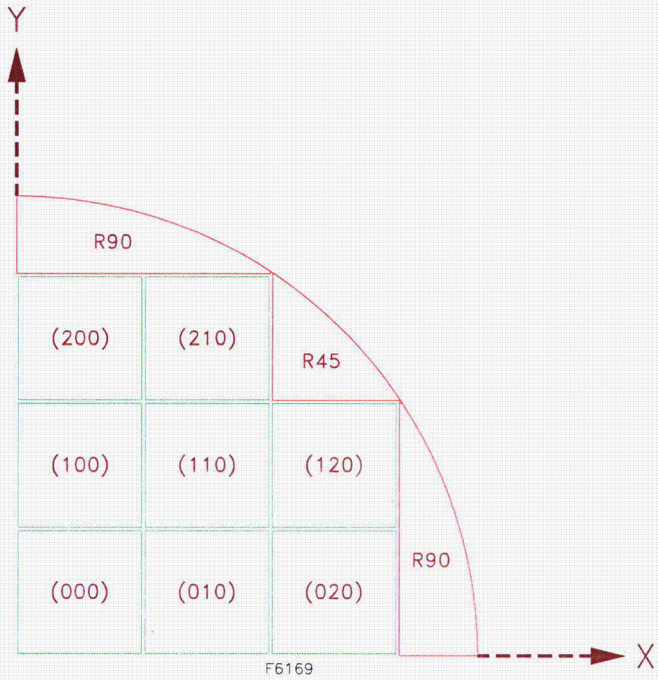

Figure W.5-4
MCNP Geometry of the 32PT DSC Basket Structure and Source Region

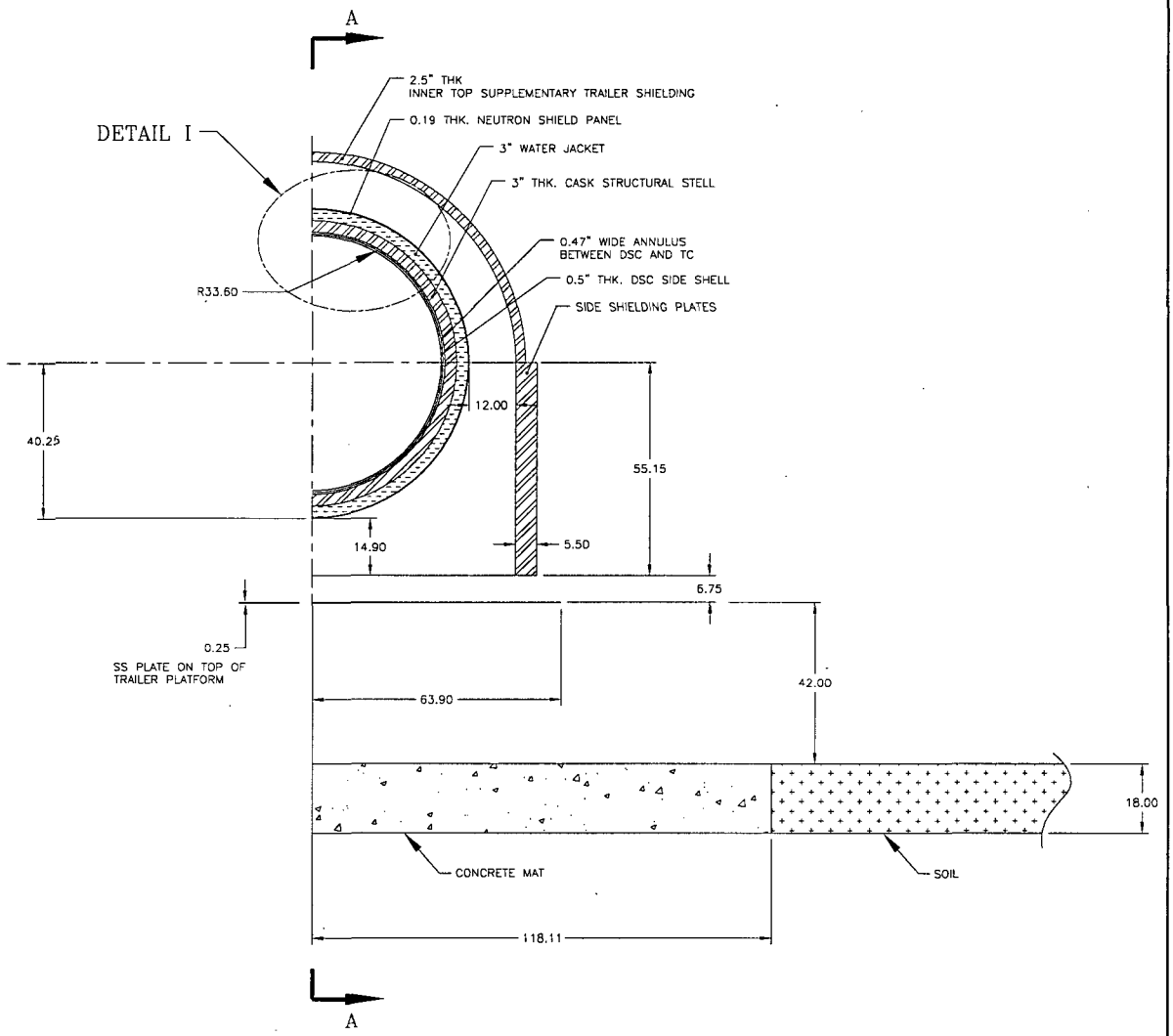

Figure W.5-5
Description of the Supplemental Trailer Shielding Calculational Model

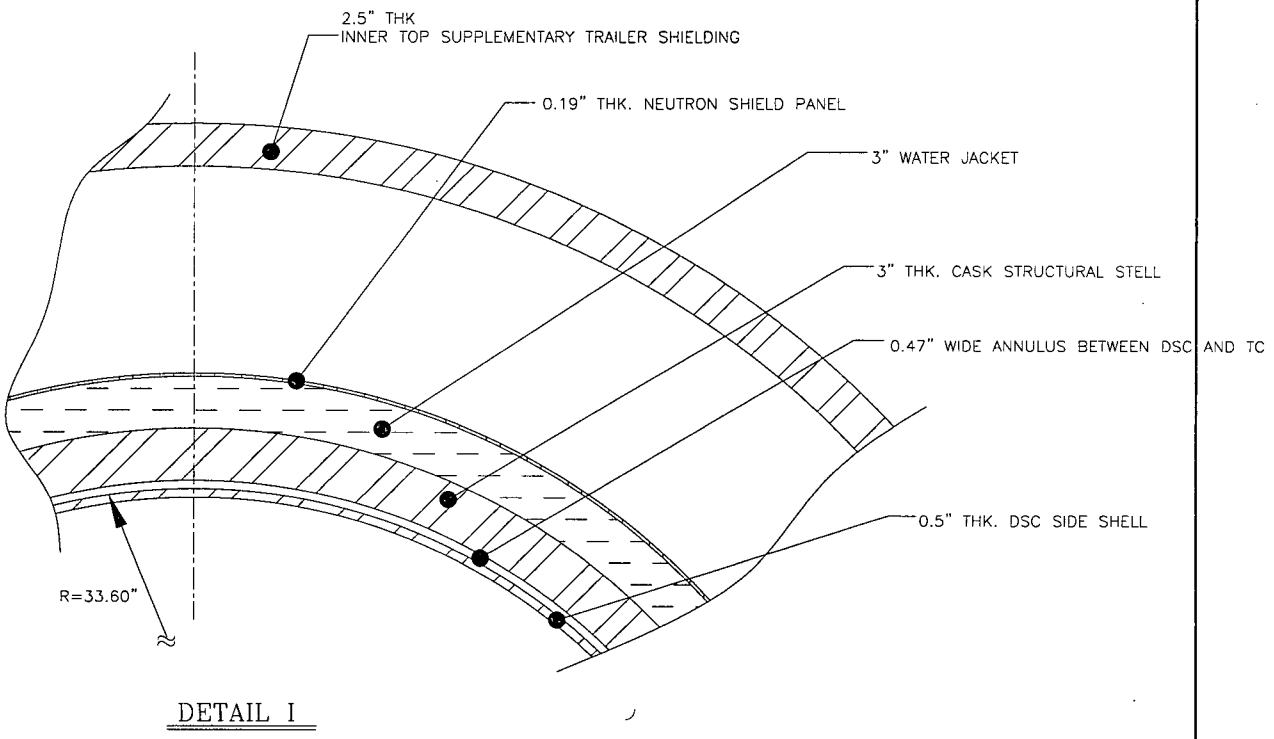

Figure W.5-5
Description of the Supplemental Trailer Shielding Calculational Model
(continued)

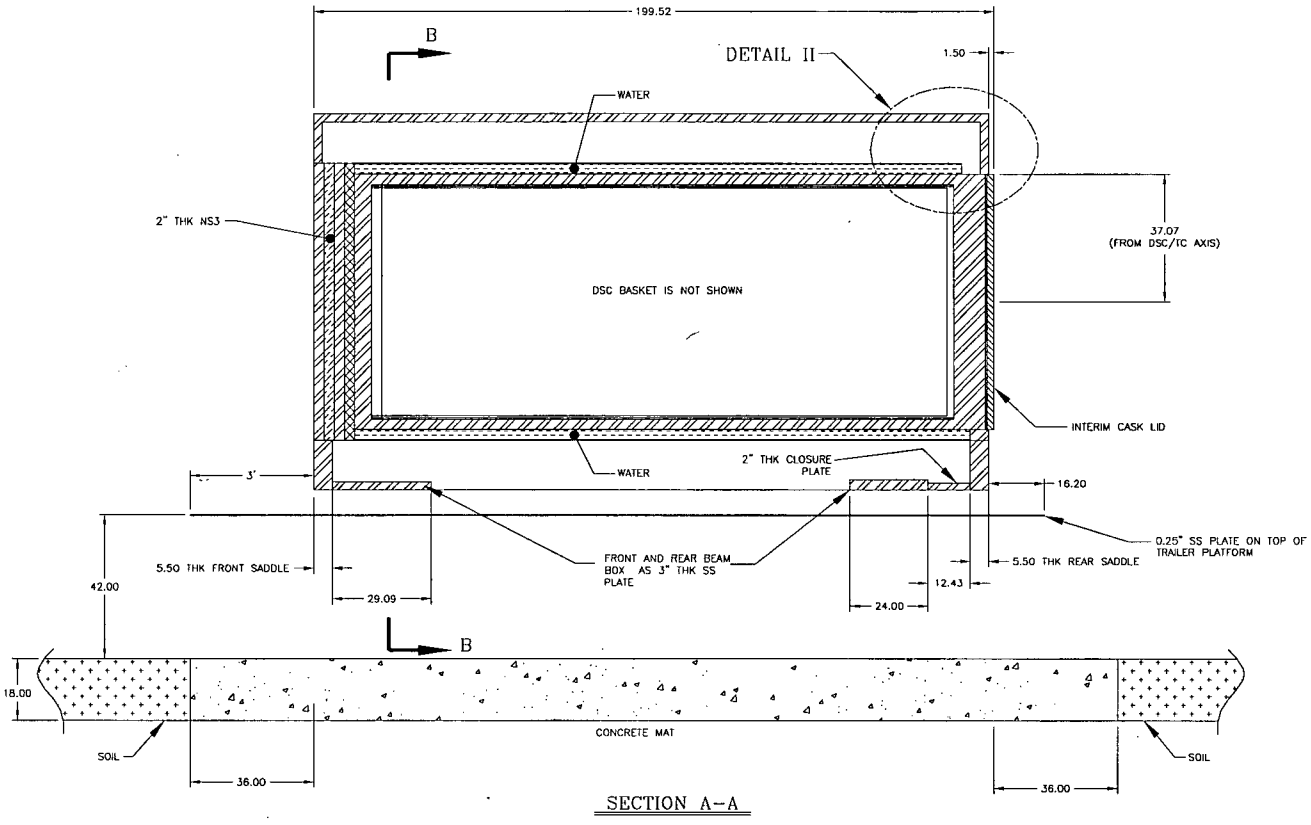

Figure W.5-5
Description of the Supplemental Trailer Shielding Calculational Model
(continued)

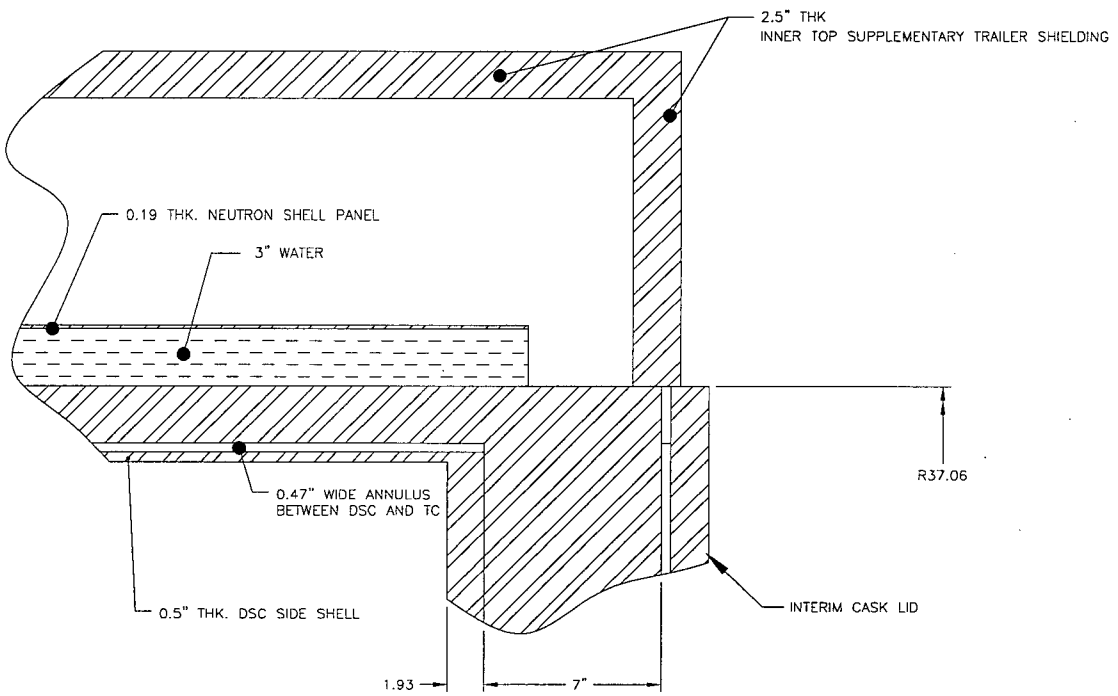

DETAIL. II
(From Section AA)

Figure W.5-5
Description of the Supplemental Trailer Shielding Calculational Model
(continued)

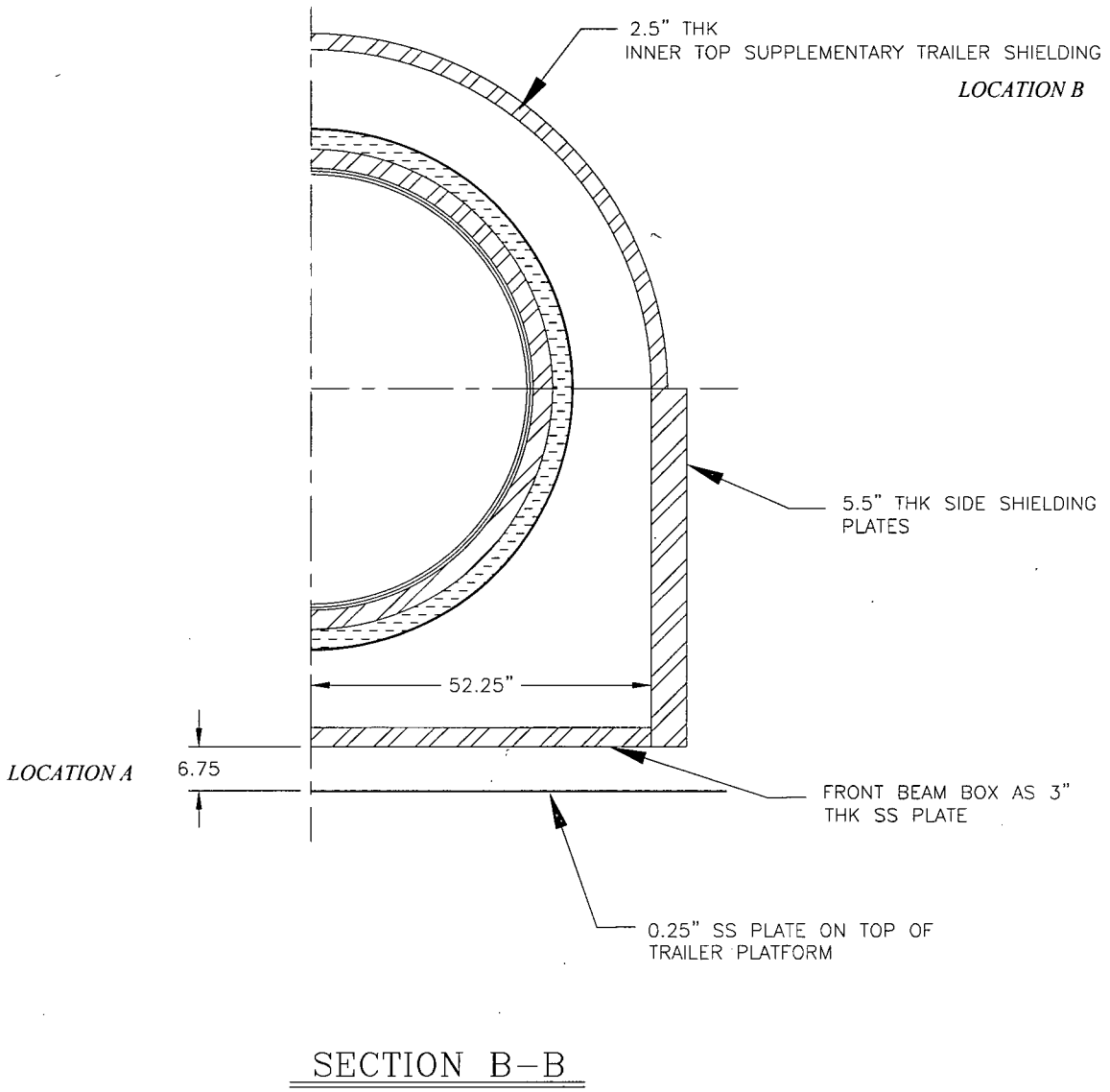

Figure W.5-5
Description of the Supplemental Trailer Shielding Calculational Model
(continued)

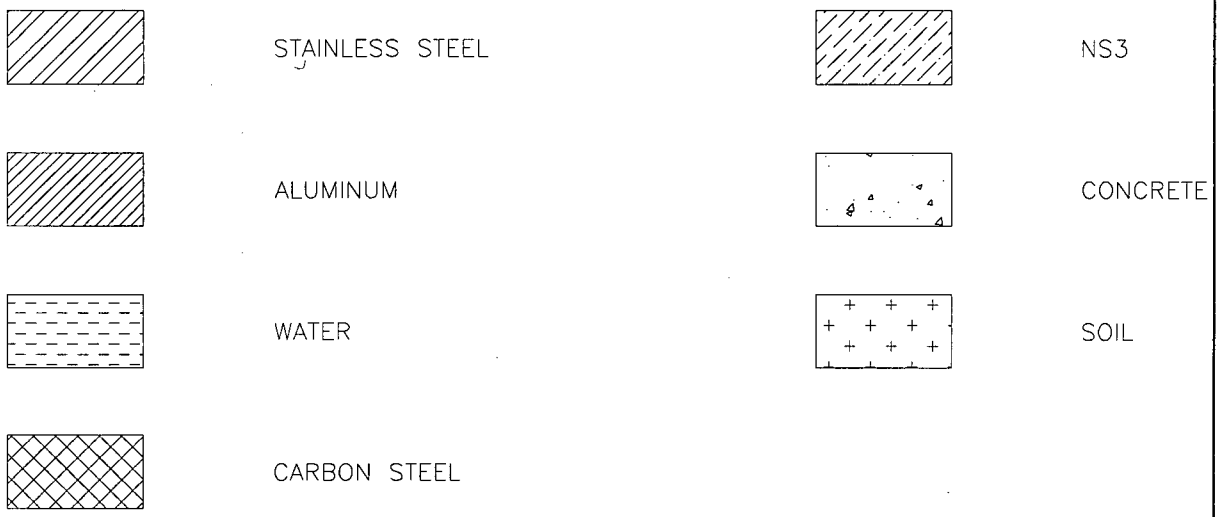

Figure W.5-5
Description of the Supplemental Trailer Shielding Calculational Model
(concluded)

W.8 Operating Systems

Chapter W.8 is provided to NRC in its entirety as part of Amendment 11. This will replace the existing Chapter W.8 in its entirety after the approval of Amendment 11 by the NRC. (Note, the existing Chapter W.8 does not allow use of the OS197L TC until Amendment 11 is approved by NRC.)

The following is a description of the operational sequences for use of the OS197L TC. In general, the steps are similar to those for the OS197 TC, described in detail in Chapter 5 of the UFSAR, and Chapter 8 of the canister-specific appendices (e.g., M.8 for the 32PT DSC). This chapter consolidates these procedures and includes the differences in operational steps when using OS197L TC relative to the OS197 TC. Figures are provided to illustrate the differences in operational steps.

Notes: A general licensee shall meet the requirements of applicable Technical Specifications (such as 4.4.1 – 4.4.3) prior to the use of OS197L TC for onsite transfer of an authorized payload.

The generic term "DSC" used throughout this chapter may be the 24P or 24PT2 or 52B or 61BT or 32PT or 24PHB DSC. The term "cask or "TC" is used for the OS197L TC.

Discussion of Similarities and Differences Between Use of the OS197 TC and OS197L TC Systems:

Placement of the DSC into the OS197L TC and preparations for placement of the TC into the fuel pool are the same as for the OS197 TC. The DSC/TC annulus is filled with clean water and sealed with the annulus seal. The TC neutron shield is also filled with clean water. As there is no fuel in the DSC at this time, the 75 ton limit is not approached, and the DSC may be filled with fuel pool water prior to lowering into the pool. This may be done either prior to the lift to the fuel pool, or the OS197L TC lowered to within a few feet of submergence and the DSC filled at that time. The OS197L TC with DSC is then lowered to the fuel pool bottom and landed, and the yoke removed. Sequence 1 below shows the cask as it enters the pool.

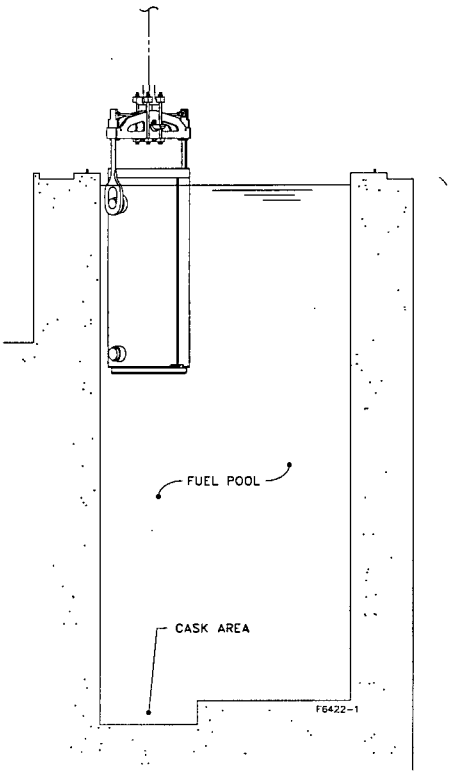

(1) OS197L IS BROUGHT TO SURFACE

Selected Fuel Assemblies (FAs) are then placed into the DSC. Following fuel verification, the top shield plug is lowered into place and set. The yoke is then lowered and connected to the OS197L TC. The cask is then lifted until the cask top just breaks the surface of the fuel pool. At this time the water weight in the DSC and cask is offset by the buoyancy of the OS197L TC and allows for the hook weight to remain below 75 tons. However, further raising of the DSC and cask would exceed the 75 ton limit. This is shown as Sequences 2 through 4.

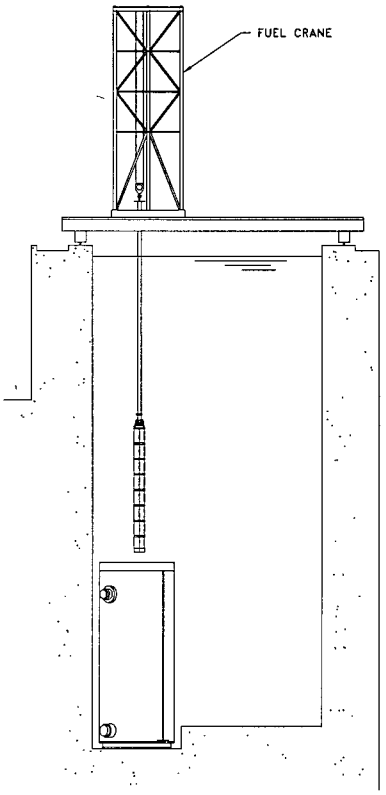

(2) FUEL ASSEMBLIES ARE LOADED INTO OS197L

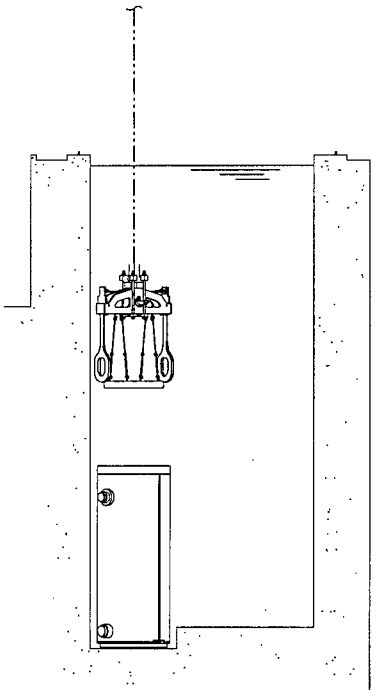

(3) TOP SHIELD PLUG IS LOWERED INTO DSC

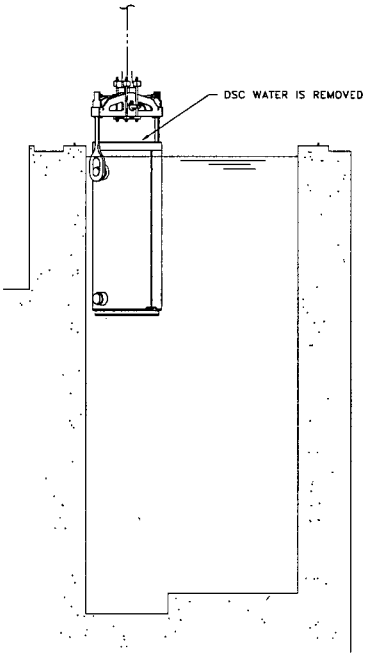

(4) OS197L IS BROUGHT TO SURFACE, AND WATER WITHIN THE DSC IS PUMPED OUT

Connections are then made to the DSC siphon and vent ports and (up to a maximum of 13,600 lbs for the 32PT DSC) water within the DSC removed (pumped out). During this water removal, a helium gas blanket will be supplied through the vent port as the water is drained. The neutron shield will not be drained during this step and the DSC/TC annulus will be maintained full. To provide additional assurance, the necessary equipment to provide makeup to the DSC/TC annulus during the movement of the cask from the fuel pool to the decon area is to be installed/staged to ensure that the annulus level can be maintained during this operation. This is shown as Sequence 4.

CAUTION: Prior to performing the next step of lifting OS197L TC from the pool, the licensee shall meet the specific radiation protection program requirements of applicable Amendment 11 Technical Specification associated with the use of OS197L TC and remote monitoring devices. The licensee shall develop appropriate measures to keep the doses ALARA during recovery from a potential malfunction of these devices, such as cameras for monitoring, targeting devices, remote controls, etc.

After water has been pumped out from the DSC (up to a maximum of approximately 13,600 lbs. for the 32PT DSC), the OS197L TC will be lifted from the fuel pool to the decontamination area. The 75 ton cask itself has significantly reduced shielding and employs draining of the water in the DSC to achieve the 75 ton limit. However, the OS197L TC operations utilize additional shielding and measures to achieve shielding capacity similar to the OS197 TC. As described in the applicable Amendment 11 Technical Specification, the OS197L TC system consists of the bare cask and the upper and lower cask shielding utilized in the decontamination area and the additional shielding provided on the cask support skid. The bare cask is in this reduced shielding configuration ONLY during the movement of the cask from the fuel pool to the decontamination area and from the decontamination area to the transfer trailer. Both of these operations are of short time duration (i.e. minutes).

During bare cask movement from the fuel pool to the decontamination area and from the decontamination area to the trailer, remote crane operation and an optical targeting system with remote camera monitoring will be used to minimize personnel exposure to the reduced shielding configuration. This remote operation is shown in Sequence 5.

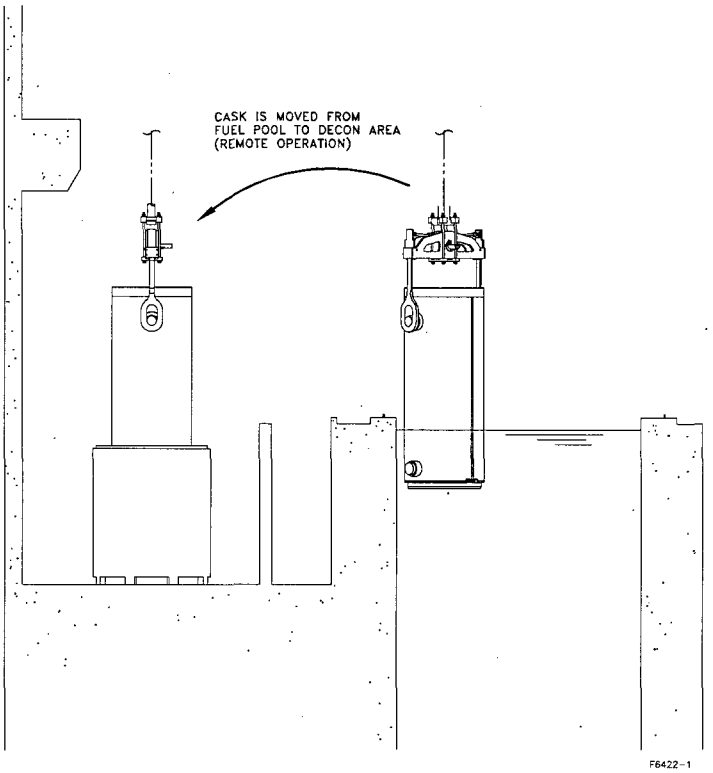

(5) FROM FUEL POOL TO DECONTAMINATION AREA, OS197L IS PLACED IN SHIELDING SLEEVE (PART OF OS197L CASK SYSTEM)

In the decontamination area, the bare cask is placed in a shielding sleeve (lower cask shield) which provides shielding below the trunnions. An upper cask shield (shielding bell) is then placed on top of the shielding sleeve to shield the upper section of the cask. The shielding sleeve and shield bell are nominally 6" thick carbon steel. Placement of the cask in the shielding sleeve and placement of the shielding bell on the cask is performed using remote crane operation and an optical targeting system with remote camera monitoring. The OS197L TC system configuration of the cask and shielding sleeve and bell is shown as Sequences 5 and 6.

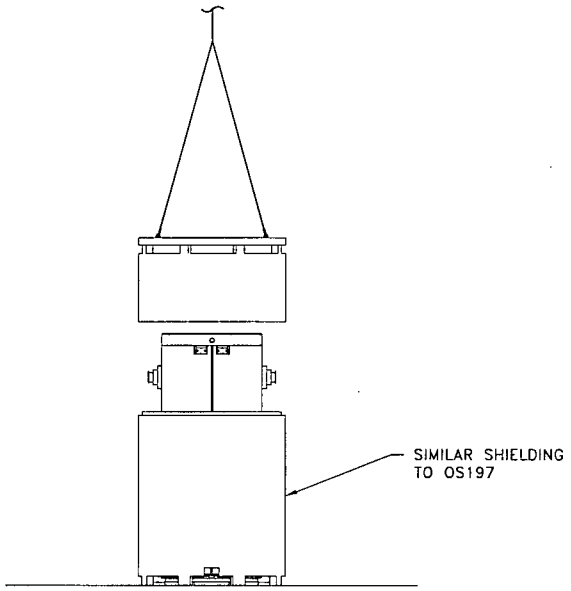

6 TOP SHIELDING BELL COMPONENT OF OS197L IS PLACED (REMOTE OPERATION)

The combination of the bare OS197L TC and these shielding structures provide a similar level of shielding as the OS197 TC in the radial direction and thus provide assurances that the TC dose rates during this operation are ALARA.

While in the shielding sleeve and bell, the canister is vacuum dried, helium backfilled, and all top covers welded in place. During these operations the DSC/TC annulus nearly remains full (approximately 12" drained from the top of the DSC) similar to OS197 TC operations. The OS197L TC neutron shield will remain filled and vented, similar to OS197 TC operations, during these steps. During these operations, the cask and the shielding sleeve and bell provide occupational radiation shielding for personnel necessary to perform the canister closure operations. These operations are essentially unchanged from those listed in the UFSAR, Chapter 5 and the canister specific Appendices, such as M.8 for the 32PT. The shielding sleeve and the bell are designed to not interfere with the NUHOMS® AWS system or other equipment of the canister sealing operations. This is shown in Sequence 7.

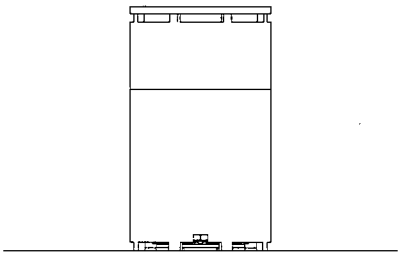

7 CANISTER IS PREPARED FOR CLOSURE OPERATIONS

Once the DSC is sealed, the DSC/TC annulus will be drained and the cask top cover installed prior to downending onto the transfer trailer. In the event that the neutron shield is to be drained (required for 32PT DSC only) to reduce weight during the transfer from the decon area to the trailer, the DSC/TC annulus will essentially remain filled and the interim cover will be installed using a gasket to prevent annulus water from leaking during downending operations[(1)]. The annulus will remain vented to the atmosphere through the annulus fill port in the cask side and through fittings in the interim cask cover. During the downending process, the bare OS197L TC movement is of short time duration and is performed using remote crane operation and/or an optical targeting system with remote camera monitoring. This remote operation is shown in Sequence 8. To provide additional assurance, the necessary equipment to provide makeup to the DSC/TC annulus during the movement of the cask from the decon area to the trailer will be installed/staged to ensure that the annulus level can be maintained during this operation.

Note: See UFSAR W.8.1 regarding the use of a reduced weight interim cask cover.

(1) - By "essentially remain filled" the intent is to maintain a normal full level, where there will exist a small, negligible, air volume.

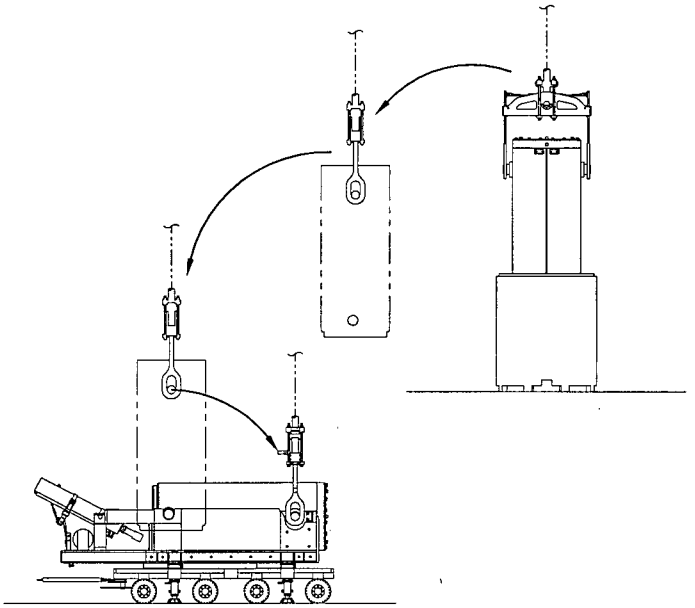

(8) CASK IS MOVED FROM DECON AREA TO TRANSFER TRAILER (REMOTE OPERATION)

Once on the transfer trailer, the skid provides 5.5" of carbon steel shielding to the sides of the cask up to the trunnions. A 2.5" thick carbon steel shield will be placed over the cask/skid inside the fuel building, after which a 3" thick carbon steel shield will be placed over the 2.5" thick shield providing a total of 5.5" of shielding on the skid. These shields may be placed on the skid inside the fuel handling building, or if load limits exist within the building, the 3" outer shield may be placed on the skid once the trailer exits the building. If the neutron shield was drained (for 32PT DSC only) during transfer from the decon area to the trailer (with the annulus filled), the neutron shield will be refilled and the annulus drained. This operation may be performed before the placement of the 3" outer shield. Placement of the inner shields and outer shields on the skid inside the fuel handling building will be performed in accordance with the plants heavy loads procedures, and is evaluated within the plant 72.212 (50.59) for the dry fuel loading process. Sequence 9 shows this remote operation.

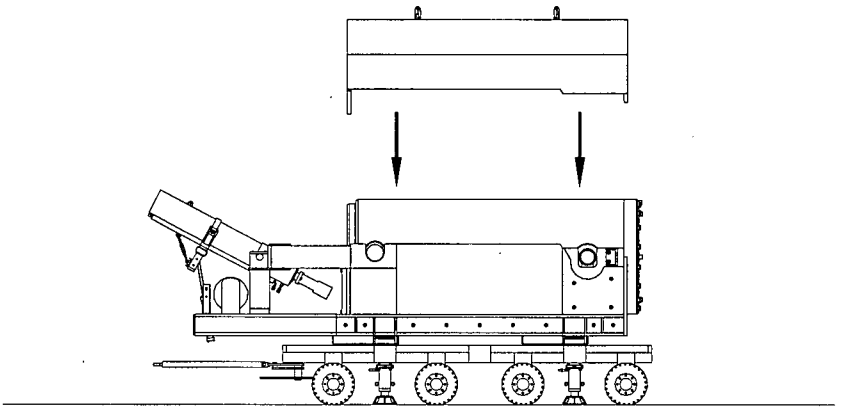

9 INSTALLATION OF SUPPORT SKID INNER TOP SHIELDING

If fuel assembly weights are of a magnitude that would exceed the 75 ton limit, the standard cask top cover may be replaced with a reduced weight interim cover (see Sequence 8) during transfer from the decontamination area to the trailer. Following placement of the cask on the trailer, and placement of the inner top shield on the transfer trailer, the interim cask top cover would be removed and the standard top cask cover installed prior to exiting the spent fuel/reactor building. This is shown in Sequence 10.

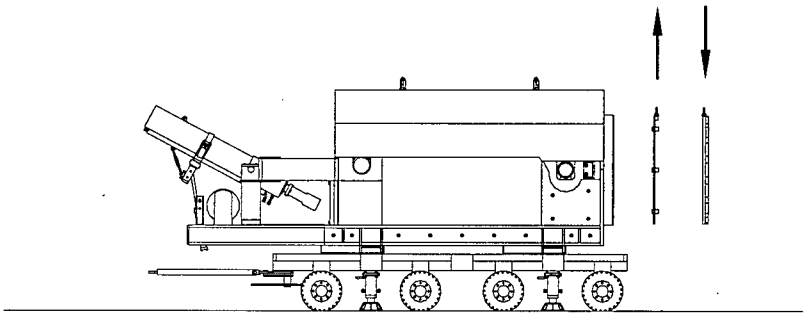

(10) INTERIM CASK TOP COVER IS REPLACED WITH STANDARD TOP COVER

Following placement of the standard cask top cover, the trailer with the OS197L TC may be moved out of the fuel building and the outer top trailer shielding installed outside, if the fuel building weight limits preclude placement of the outer top trailer shielding inside the fuel building. This is shown in Sequence 11. The OS197L TC system shielding (6" of shielding) provided in the decontamination area and the 5.5" provided on the trailer, along with the shielding provided by the bare OS197L TC, provides a level of shielding equivalent to that provided by the standard OS197 TC (with lead shielding) and is the bounding condition of the two from a dose perspective (decon area and transfer trailer).

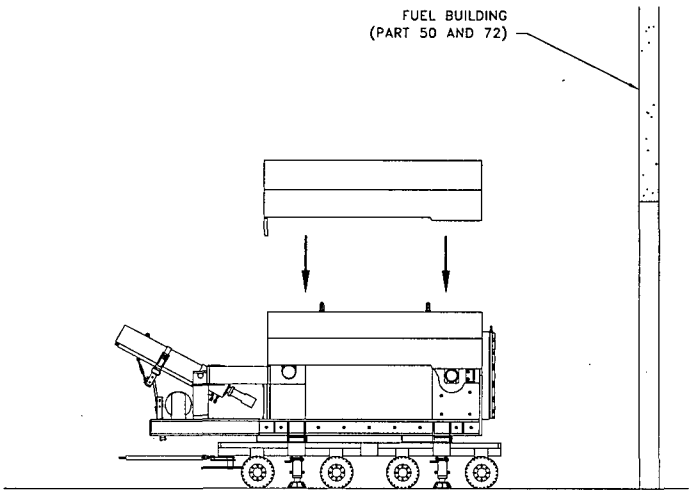

(11) INSTALLATION OF PART 72 SUPPORT SKID OUTER TOP SHIELDING

CAUTION: Visually monitor the outer top trailer shield vents and the openings around the cask ends for any sign of steaming which may indicate leakage of water from the cask neutron shield. If steaming is determined to be due to leakage of neutron shield water and not due to any rain or snow or other ambient conditions, then Licensee must take appropriate corrective actions including terminating the transfer operation and returning the loaded cask to the fuel handling building for further assessment.

The transfer trailer, with loaded OS197L TC including the supplemental shielding, is then moved to the ISFSI and the Cask docked with the HSM. The DSC is then inserted into the HSM using the same methods as the OS197 TC. This is shown in Sequence 12.

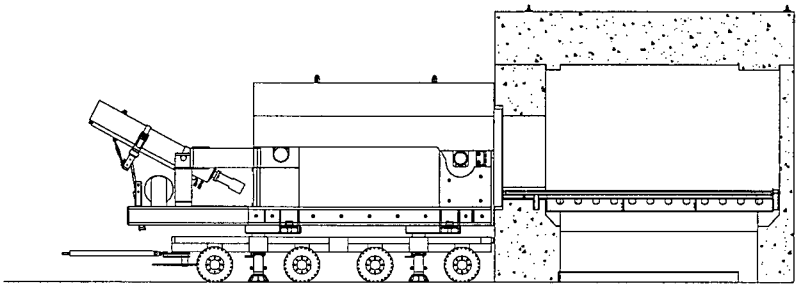

(12) TRANSFER TRAILER IS DOCKED TO HSM AND CANISTER IS TRANSFERRED

W.8.1 Procedures for Loading the Cask

Prior to transfer of the loaded OS197L TC from the fuel pool to the decontamination area or from the decontamination area to the transfer trailer, procedures for recovery from a crane malfunction and failure of other remote operations equipment such as the optical targeting system, cameras, etc. shall be developed and in place. The procedures should be developed based on the existing site emergency operating and response procedures which provide guidance for any probable set of events including failure of crane components.

The procedures include preparation of the DSC and fuel loading, closure of the DSC, transfer to the ISFSI using the OS197L TC, DSC transfer into the HSM, monitoring operations, and DSC retrieval from the HSM. The NUHOMS® OS197L transfer equipment, and the existing plant systems and equipment are used to accomplish these operations. Procedures are delineated here to describe how these operations are to be performed and are not intended to be limiting. Standard fuel and cask handling operations performed under the plant's 10CFR50 operating license are described in less detail. Existing operational procedures may be revised by the licensee and new ones may be developed according to the requirements of the plant, provided that the limiting conditions of operation specified in Technical Specifications and the Functional and Operating Limits of the NUHOMS® CoC are not exceeded.

The following sections outline the typical operating procedures for the NUHOMS® OS197L TC System. These generic NUHOMS® procedures have been developed to minimize the amount of time required to complete the subject operations, to minimize personnel exposure, and to assure that all operations required for DSC loading, closure, transfer, and storage are performed safely. Plant specific ISFSI procedures are to be developed by each licensee in accordance with the requirements of 10CFR72.212 (b) and the guidance of Regulatory Guide 3.61 [8.1]. The generic procedures presented here are provided as a guide for the preparation of plant specific procedures and serve to point out how the NUHOMS® OS197L System operations are to be accomplished. They are not intended to be limiting, in that the licensee may evaluate that alternate acceptable means are available to accomplish the same operational objective.

W.8.1.1 *Preparation of the TC and DSC*

1. *Prior to placement in dry storage, the candidate intact and damaged fuel assemblies shall be evaluated (by plant records or other means) to verify that they meet the physical, thermal and radiological criteria specified in Technical Specification 2.1.*

2. *Prior to being placed in service, the TC is to be cleaned or decontaminated as necessary to insure a surface contamination level of less than those specified in Technical Specification 5.2.4d.*

3. *Place the TC in the vertical position in the cask decon area using the cask handling crane and the TC lifting yoke.*

4. *Place scaffolding around the cask so that the transfer cask top cover plate and surface of the cask are easily accessible to personnel.*

5. *Remove the TC top cover plate and examine the cask cavity for any physical damage and ready the cask for service.*

6. *Examine the DSC for any physical damage which might have occurred since the receipt inspection was performed. The DSC is to be cleaned and any loose debris removed.*

7. *Record the DSC serial number which is located on the grapple ring. Verify the correct DSC type, basket type and poison material types against the DSC serial number. Verify that the DSC is appropriate for the specific fuel loading campaign per the criteria specified in Technical Specification 2.1.*

8. *Using a crane, lower the DSC into the cask cavity by the internal lifting lugs and rotate the DSC to match the cask and DSC alignment marks.*

9. *If damaged fuel assemblies are included in a specific loading campaign, place the required number of bottom end caps provided into the cell locations per Technical Specification 2.1. Optionally, this step may be performed at any prior time.*

10. *Fill the cask/DSC annulus with clean, demineralized water. Place the inflatable seal into the upper cask liner recess and seal the cask-DSC annulus by pressurizing the seal with compressed air.*

11. *For DSC types 24P (including 24PT2), 32PT and 24PHB fill the DSC cavity with water from the fuel pool or an equivalent source which meets the requirements of Technical Specification 3.2.1. (Note: this step may be accomplished in the fuel pool).*

11a. *For DSC types 52B and 61BT fill the DSC cavity with water from the fuel pool, and equivalent source or demineralized water. (Note: this step may be accomplished in the fuel pool).*

NOTE: A TC/DSC annulus pressurization tank filled with demineralized water as described above is connected to the top vent port of the TC via a hose to provide a positive head above the level of water in the TC/DSC annulus. This is an optional arrangement, which provides additional assurance that contaminated water from the fuel pool will not enter the TC/DSC annulus, provided a positive head is maintained at all times.

12. *Place the top shield plug onto the DSC. Examine the top shield plug to ensure a proper fit. Optionally, the top shield plug once fitted, may be removed and disconnected from the yoke. It may be installed later once the DSC is loaded and prior to removing it from the pool.*

13. *Position the cask lifting yoke above the transfer cask and engage the cask lifting trunnions and the rigging cables to the DSC top shield plug. Adjust the rigging cables as necessary to obtain even cable tension.*

14. *Visually inspect the yoke lifting hooks to insure that they are properly positioned and engaged on the cask lifting trunnions.*

15. *Provide for later connection to the vacuum drying system (VDS) or an optional water draining/pumping device to the siphon port of the DSC and position any connecting hose such that the hose will not interfere with loading (yoke, fuel, shield plug, rigging, etc.). A flowmeter or other suitable means for measuring the amount of water removed must be installed at a suitable location as part of this connection.*

16. *Move the scaffolding away from the cask as necessary.*

17. *Lift the cask just far enough to allow the weight of the cask to be distributed onto the yoke lifting hooks. Reinspect the lifting hooks to insure that they are properly positioned on the cask trunnions.*

18. *a. Optionally, secure a sheet of suitable material to the bottom of the TC to minimize the potential for ground-in contamination. This may also be done prior to initial placement of the cask in the decon area.*

    b. Fill the TC liquid neutron shield as required by licensee ALARA requirements and crane capacity limits. This step may be completed at any time prior to immersion of the TC/DSC into the pool.

19. *Prior to the cask being lowered into the fuel pool, the water level in the pool should be adjusted as necessary to accommodate the cask/DSC volume. If the water placed in the DSC cavity was obtained from the fuel pool, a level adjustment may not be necessary.*

W.8.1.2 *<u>DSC Fuel Loading</u>*

Note: The licensee shall verify that the lifting device used for handling the OS197L TC meets the requirements of the sites lifting program. Licensee shall use remote operations or other mitigating ALARA practices when handling the bare OS197L TC when loaded with fuel as required by the sites ALARA program and the Radiation Protection Program requirements of Technical Specification 5.2.4a.

1. *Lift the cask/DSC and position it over the cask loading area of the spent fuel pool in accordance with the plant's 10CFR50 cask handling procedures.*

2. *Lower the cask into the fuel pool until the bottom of the cask is at the height of the fuel pool surface. As the cask is lowered into the pool, spray the exterior surface of the cask with demineralized water.*

3. *Place the cask in the designated location of the fuel pool.*

4. *Disengage the lifting yoke from the cask lifting trunnions and move the yoke clear of the cask. Spray the lifting yoke with clean demineralized water if it is raised out of the fuel pool.*

5. *The potential for fuel misloading is essentially eliminated through the implementation of procedural and administrative controls. The controls instituted to ensure that damaged*

and/or intact fuel assemblies and control components (CCs), if applicable, are placed into a known cell location within a DSC, will typically consist of the following:

- *A cask/DSC loading plan is developed to verify that the damaged and/or intact fuel*
- *assemblies, and CCs, if applicable, meet the burnup, enrichment and cooling time parameters of Technical Specification 2.1.*
- *The loading plan is independently verified and approved before the fuel load.*
- *A fuel movement schedule is then written, verified and approved based upon the loading plan. All fuel movements from any rack location are performed under strict compliance of the fuel movement schedule.*
- *If loading damaged fuel assemblies, verify that the required number of bottom end caps are installed in appropriate fuel compartment tube locations before fuel load.*

6. *Prior to loading of a spent fuel assembly (and CCs, if applicable) into the DSC, the identity of the assembly (and CCs, if applicable) is to be verified by two individuals using an underwater video camera or other means. Verification of CC identification is optional if the CC has not been moved from the host fuel assembly since it's last verification. Read and record the identification number from the fuel assembly (and CCs, if applicable) and check this identification number against the DSC loading plan which indicates which fuel assemblies (and CCs, if applicable) are acceptable for dry storage.*

7. *Move a candidate fuel assembly from a fuel rack in accordance with the Plant's 10CFR50 fuel handling procedures.*

8. *Position the fuel assembly for insertion into the selected DSC storage cell and load the fuel assembly. Repeat Step 5 through 7 for each SFA loaded into the DSC. After the DSC has been fully loaded, check and record the identity and location of each fuel assembly and CCs, if applicable, in the DSC. If loading damaged fuel assemblies, place top end caps over each damaged fuel assembly placed into the basket.*

9. *After all the SFAs and CCs, if applicable, have been placed into the DSC and their identities verified, position the lifting yoke and the top shield plug and lower the shield plug onto the DSC. Note that separate rigging may be used to install the shield plug prior to engaging the trunnions with the lifting yoke.*

   CAUTION: Verify that all the lifting height restrictions as a function of temperature specified in Technical Specification 5.3.1 A. can be met in the following steps which involve lifting of the TC.

10. *Visually verify that the top shield plug is properly seated onto the DSC.*

11. *Position the lifting yoke with the TC trunnions and verify that it is properly engaged.*

12. *Raise the TC to the pool surface. Prior to raising the top of the cask above the water surface, stop vertical movement.*

13. *Inspect the top shield plug to verify that it is properly seated onto the DSC. If not, lower the cask and reposition the top shield plug. Repeat Steps 9 through 13 as necessary.*

14. *Continue to raise the TC from the pool and spray the exposed portion of the cask with water until the top region of the cask is accessible.*

15. *Drain any excess water from the top of the DSC shield plug back to the fuel pool.*

16. *Take a preliminary measurement of the OS197L TC dose rates at 3 feet from the top of the cask with the shield plug installed and water in the DSC cavity. Disconnect the top shield plug rigging.*

17. *Drain a approximately 60 gallons, or a plant specific calculated value to meet the crane weight limit, of water (as indicated by the flowmeter) from the DSC cavity back into the pool or other suitable location. For the 32PT DSC up to approximately 1630 gallons (to empty the DSC) may be drained. Use 1 to 3 psig of helium to backfill the DSC with helium per ISG-22 [8.5] guidance and Technical Specification 3.1.1 as water is being removed from the DSC cavity.*

18. *Install shield plug restraints.*

    CAUTION: Evacuate personnel from the area, as specified by plant's ALARA practices, due to the high cask dose rates. Crane operations shall be performed remotely and an optical targeting system with remote camera monitoring shall be used to minimize personnel exposure.

19. *Lift the TC from the fuel pool. As the cask is raised from the pool, spray the cask with water as directed. Provisions should be made to assure that air will not enter the DSC cavity and that the cask/DSC annulus remains full of water. This may be achieved by replenishing the helium in the DSC cavity during cask movement from fuel pool to the decontamination area and providing a way to remotely fill the annulus with water in case of malfunction of equipments used for cask movement.*

20. *Move the TC with loaded DSC to the cask decon area and carefully place it in the decontamination area shielding sleeve.*

21. *Place the decontamination area shielding bell over the side of the cask above the upper trunnions. Placement of the shielding bell shall be periodically (every hour) performed in accordance with the plant's heavy load procedures. The shielding sleeve and bell provide the additional shielding to produce similar shielding as the OS197 TC.*

22. *If more than approximately 60 gallons of water was removed in step 17, refill the DSC cavity back slowly with approximately the same amount of water from the fuel pool or an equivalent source which meets the requirements of Technical Specifications 3.2.1.*

23. *If applicable to keep the occupational exposure ALARA, temporary shielding may be installed as necessary to minimize personnel exposure. Install cask seismic restraints if required by Technical Specification 4.3.3 7. (Required only on plant specific basis).*

W.8.1.3 *<u>DSC Drying and Backfilling</u>*

CAUTION: During performance of steps listed in Section W.8.1.3, monitor the TC/DSC annulus water level and replenish if necessary until drained.

CAUTION: During performance of steps listed in Section W.8.1.3, the opening at the top and bottom of the decontamination area shielding shall be monitored (visual inspection) to assure no significant blockage of openings. Although blockage is improbable as all 16 openings would require sealing, personnel shall perform visual inspection of shielding sleeve and bell openings during the operations when DSC is in the sleeve.

1. *Check the radiation levels along the perimeter of the cask/shields. The cask exterior surface should be decontaminated as necessary in accordance with the limits specified in Technical Specification 5.2.4*d. *Install additional temporary shielding as necessary to minimize personnel exposure. (Fill neutron shield, if empty)*

2. *Place scaffolding around the cask so that any point on the surface of the cask is easily accessible to personnel.*

3. *Disengage the rigging cables from the top shield plug and remove the eyebolts. Disengage the lifting yoke from the trunnions and position it clear of the cask.*

4. *Decontaminate the exposed surfaces of the DSC shell perimeter and remove the inflatable TC/DSC annulus seal.*

5. *Connect the cask drain line to the cask, open the cask cavity drain port and allow water from the annulus to drain out until the water level is approximately twelve inches below the top edge of the DSC shell. Take swipes around the outer surface of the DSC shell and check for smearable contamination in accordance with the Technical Specification 5.2.4d. limits.*

   CAUTION: Radiation dose rates are expected to be high at the vent and siphon port locations. Use proper ALARA practices (e.g., use of temporary shielding, appropriate positioning of personnel, etc.) to minimize personnel exposure.

6. *Drain approximately number of gallons of water shown in table below (as indicated on a flowmeter) from the DSC back into the fuel pool or other suitable location. Consistent with ISG-22 [*8.5*] guidance and Technical Specification 3.1.1, helium at 1-3 psig is used to backfill the DSC with an inert gas (helium) as water is being removed from the DSC. Only helium may be used to assist in the removal of water.*

DSC	*Gallons of Water*
24P (24PT2)	*60*
32PT	*750*
24PHB	*60*
52B	*60*
61BT	*1100*

7. *Disconnect hose from DSC siphon port.*

8. *Monitor TC/DSC annular water level and replenish as necessary until drained.*

9. *Install the automatic welding machine onto the inner top cover plate and place the inner top cover plate with the automatic welding machine onto the DSC. Optionally, the inner top cover plate and the automatic welding machine can be placed separately. Verify proper fit-up of the inner top cover plate with the DSC shell*

10. *Check radiation levels along surface of the inner top cover plate. Temporary shielding may be installed as necessary to minimize personnel exposure.*

11. *Insert tubing of sufficient length and adequate temperature resistance through the vent port such that it terminates just below the DSC shield plug. Connect the flexible tubing to a hydrogen monitor to allow continuous monitoring of the hydrogen atmosphere in the DSC cavity during welding of the inner cover plate, in compliance with Technical Specification 5.2.6. Optionally, other methods may be used for continuous monitoring of the hydrogen atmosphere in the DSC cavity during welding of the inner top cover plate, to comply with the Technical Specification.*

12. *Cover the cask/DSC annulus to prevent debris and weld splatter from entering the annulus.*

13. *Ready the automatic welding machine and tack weld the inner top cover plate to the DSC shell. Install the inner top cover plate weldment and remove the automatic welding machine.*

    *CAUTION: Continuously monitor the hydrogen concentration in the DSC cavity using the arrangement or other alternate methods described in Step 11 during the inner top cover plate cutting/welding operations. Verify that the measured hydrogen concentration does not exceed a safety limit of 2.4% [*8.2 *and* 8.3*]. If this limit is exceeded, stop all welding operations and purge the DSC cavity with approximately 2-3 psig helium via the tubing to reduce the hydrogen concentration safely below the 2.4% limit.*

14. *Perform dye penetrant weld examination of the inner top cover plate weld in accordance with the Technical Specification 5.2.4b requirements.*

15. *Remove purge lines and connect the VDS to the DSC siphon and vent ports.*

16. *Install temporary shielding to minimize personnel exposure throughout the subsequent welding operations as required.*

17. *Install Strongback on 24P (including 24PT2), 52B, 61BT or 24PHB without shifted shielding. Strongback is optional for 32PT and 24PHB with shifted shielding.*

    a. *Place strongback so that it sits on the inner top cover plate and is oriented such that:*

        - *the DSC siphon and vent ports are accessible*
        - *the strongback stud holes line up with the TC lid bolt holes*

    b. *Lubricate the studs and, using a cross pattern, adjust the strongback studs to snug tight ensuring approximately even pressure on the cover plate*

18. *a. If using blowdown method to remove water, engage helium supply (up to 15 psig) and open the valve on the vent port and allow helium to force the water from the DSC cavity through the siphon port. Use of helium is required per Technical Specification 3.1.1*

    b. If using water pumps to remove water without blowdown, pump water from DSC. Use 1 to 3 psig of helium to backfill the DSC with helium per ISG-22 [8.5] guidance and Technical Specification 3.1.1 as water is being removed from the DSC cavity.

19. *Once the water stops flowing from the DSC, close the DSC siphon port and disengage the helium source and/or turn off the section pump, as applicable. Verify that the transfer cask dose rates are compliant with limits specified in Technical Specification 5.3.4*e.

    CAUTION: Radiation dose rates are expected to be high at the vent and siphon port locations. Use proper ALARA practices (e.g., use of temporary shielding, appropriate positioning of personnel, etc.) to minimize personnel exposure.

20. *Connect the hose from the vent port and the siphon port to the intake of the vacuum pump. Connect a hose from the discharge side of the VDS to the plant's radioactive waste system or spent fuel pool. Connect the VDS to a helium source.*

    Note: Proceed cautiously when evacuating the DSC to avoid freezing consequences.

21. *Open the valve on the suction side of the pump, start the VDS and draw a vacuum on the DSC cavity. The cavity pressure should be reduced in steps of approximately 100 mm Hg, 50 mm Hg, 25 mm Hg, 15 mm Hg, 10 mm Hg, 5 mm Hg, and 3 mm Hg. After pumping down to each level (these levels are optional), the pump is valved off and the cavity pressure monitored. The cavity pressure will rise as water and other volatiles in the cavity evaporate. When the cavity pressure stabilizes, the pump is valved in to complete the vacuum drying process. It may be necessary to repeat some steps, depending on the rate and extent of the pressure increase. Vacuum drying is complete when the pressure stabilizes for a minimum of 30 minutes at 3 mm Hg or less as specified in Technical Specification 3.1.1.*

22. *Open the valve to the vent port and allow the helium to flow into the DSC cavity.*

23. *Pressurize the DSC with helium up to about 24 psia not to exceed 34 psia.*

24. *Helium leak test the inner top cover plate weld for the leak rate shown in the table below. Note: if a Technical Specification is not listed for a particular DSC, then this test is optional.*

DSC	*Leak Rate (atm cm^3 / sec)*	*Applicable Technical Specification*
24P (24PT2)	*1×10^{-4}*	*5.2.4c*
32PT	*1×10^{-5}*	
24PHB	*1×10^{-5}*	
52B	*1×10^{-4}*	*5.2.4c*
61BT	*1×10^{-5}*	

25. *If a leak is found, repair the weld, repressurize the DSC and repeat the helium leak test.*

26. *Once no leaks are detected, depressurize the DSC cavity by releasing the helium through the VDS to the plant's spent fuel pool or radioactive waste system.*

27. *Re-evacuate the DSC cavity using the VDS. The cavity pressure should be reduced in steps of approximately 10 mm Hg, 5 mm Hg, and 3 mm Hg. After pumping down to each level, the pump is valved off and the cavity pressure is monitored level (these levels are optional). When the cavity pressure stabilizes, the pump is valved in to continue the vacuum drying process. Vacuum drying is complete when the pressure stabilizes for a minimum of 30 minutes at 3 mm Hg or less in accordance with Technical Specification 3.1.1 limits.*

    CAUTION: Radiation dose rates are expected to be high at the vent and siphon port locations. Use proper ALARA practices (e.g., use of temporary shielding, appropriate positioning of personnel, etc.) to minimize personnel exposure.

28. *Open the valve on the vent port and allow helium to flow into the DSC cavity to pressurize the DSC as shown in the table below (Value A) and hold for 10 min. Depressurize the DSC cavity by releasing the helium through the VDS to the plant spent fuel pool or radioactive waste system to value shown in table below (Value B) in accordance with Technical Specification 3.1.2 limits.*

DSC	*Value A (psig)*	*Value B (psig)*
24P (24PT2)	*27.5 – 29.0*	*2.5 ± 2.5*
32PT	*16.5 – 18.0*	*2.5 ± 1.0*
24PHB	*16.5 – 18.0*	*2.5 ± 1.0*
52B	*27.5 – 29.0*	*2.5 ± 2.5*
61BT	*11.0 – 12.5*	*2.5 ± 1.0*

29. *Close the valves on the helium source.*

30. *Remove the strongback, decontaminate as necessary, and store (if used).*

W.8.1.4 *<u>DSC Sealing Operations</u>*

CAUTION: During performance of steps listed in Section W.8.1.4, monitor the Cask/DSC annulus water level and replenish as necessary to maintain cooling.

CAUTION: During performance of steps listed in Section W.8.1.4, the opening at the top and bottom of the decontamination area shielding shall be monitored (visual inspection) to assure no significant blockage of openings. Although blockage is improbable as all 16 openings would require sealing, personnel shall perform visual inspection of shielding sleeve and bell openings during the operations when DSC is in the sleeve.

1. *Disconnect the VDS from the DSC. Seal weld the prefabricated plugs over the vent and siphon ports. Inject helium into blind space just prior to completing welding, and perform a dye penetrant weld examination in accordance with the Technical Specification 5.2.4b requirements.*

2. *Temporary shielding may be installed as necessary to minimize personnel exposure. Install the automatic welding machine onto the outer top cover plate and place the outer top cover plate with the automatic welding system onto the DSC. Optionally, outer top cover plate may be installed separately from the welding machine. Verify proper fit up of the outer top cover plate with the DSC shell.*

3. *Tack weld the outer top cover plate to the DSC shell. Place the outer top cover plate weld root pass.*

4. *For the 61BT, 32PT, and 24PHB DSCs, perform a helium leak test of the inner top cover plate and vent/siphon port plate welds using the leak test port in the outer top cover plate in accordance with Technical Specification 5.2.4c limits. Verify that the personnel performing the leak test are qualified in accordance with SNT-TC-1A [8.4]. Alternatively this can be done with a test head in step 1 of Section W.8.1.4 (For the 24P, 24PT2, and 52B DSCs skip to Step 6)*

5. *If a leak is found, remove the outer cover plate root pass (if not using test head), the vent and siphon port plugs and repair the inner cover plate welds. Repeat procedure steps from W.8.1.3 Step 20.*

6. *Perform dye penetrant examination of the root pass weld. Weld out the outer top cover plate to the DSC shell and perform dye penetrant examination on the weld surface in accordance with the Technical Specification 5.2.4b requirements.*

7. *Install and seal weld the prefabricated plug, if applicable, over the outer cover plate test port and perform dye penetrant weld examinations in accordance with Technical Specification 5.2.4b requirement.*

8. *Remove the automatic welding machine from the DSC.*

9. *For 24P, 24PT2, 52B, 61BT or 24PHB DSC, drain the DSC/TC annulus. (Do not drain annulus for 32PT DSC.)*

10. *For 24P, 24PT2, 52B, 61BT or 24PHB DSCs, rig the cask top cover plate and lower the cover plate onto the TC.*

    For the 32PT DSC only, the standard cask top cover plate is replaced with a reduced weight interim cover during transfer from the decontamination area to the trailer. The interim top cover will be placed on the cask with a gasket. CAUTION: The interim top cover shall not be used outside the fuel building. The annulus must remain vented to the atmosphere through the annulus fill port in the cask side and/pr through fittings in the interim cask cover. Prior to installation of the interim cover verify that DSC/TC annulus is full and install/stage necessary equipment to provide makeup to the DSC/TC annulus during the movement of the cask from the decontamination area to the trailer. See Technical Specification 4.4.4 for limitations of use for the interim cover.

11. *Bolt the cask cover plate into place, tightening the bolts to the required torque in a star pattern.*

W.8.1.5 <u>*TC Downending and Transfer to ISFSI*</u>

Note: Licensee shall use remote operations or other mitigating ALARA practices when handling the bare OS197L TC when loaded with fuel as required by the sites ALARA program and the Radiation Protection Program requirements of Technical Specification 5.2.4a.

Note: <u>*Alternate Procedure for Downending of Transfer Cask*</u>*: Some plants have limited floor hatch openings above the cask/trailer/skid, which limit crane travel (within the hatch opening)*

that would be needed in order to downend the TC with the trailer/skid in a stationary position. For these situations, alternate procedures are to be developed on a plant-specific basis, with detailed steps for downending.

CAUTION: Evacuate personnel from the area, as specified by plant's ALARA practices, due to the high cask dose rates. Crane operations shall be performed remotely and an optical targeting system with remote camera monitoring shall be used to minimize personnel exposure upon removal the decontamination area shielding bell from the cask. Failure of remote operating devices should be considered and proper repair/recovery operations should be planned to keep doses ALARA. Provisions shall be made to replenish the water in the DSC/TC annulus for the transfer of 32PT DSC, when water in the neutron shield is drained.

1. *For 32PT DSC only, drain water from the neutron shield as required to meet 75-ton crane limits; for other DSC types, verify neutron shield is filled.*

2. *Move the scaffolding away from the cask as necessary.*

3. *Rig and remove the decontamination area shielding bell from the cask. Removal of the shielding bell shall be performed in accordance with the plant's heavy load procedures.*

4. *Re-attach the TC lifting yoke to the crane hook, as necessary. Ready the transport trailer and cask support skid for service.*

5. *The transport trailer should be positioned so that cask support skid is accessible to the crane with the trailer supported on the vertical jacks.*

6. *Position the cask lower trunnions onto the transfer trailer support skid pillow blocks.*

7. *Move the crane forward while simultaneously lowering the cask until the cask upper trunnions are just above the support skid upper trunnion pillow blocks.*

8. *Inspect the positioning of the cask to insure that the cask and trunnion pillow blocks are properly aligned.*

9. *Lower the cask onto the skid until the weight of the cask is distributed to the trunnion pillow blocks.*

10. *Place the inner top shield on the skid (this must be performed inside the fuel handling building). Placement of the shields shall be performed in accordance with the plant's heavy load procedures and shall be evaluated within the plant 72.212 (50.59) for the dry fuel loading procedures.*

11. *If the neutron shield was drained for transfer from the decontamination area to the trailer, the neutron shield shall be refilled.*

12. *Inspect the trunnions to ensure that they are properly seated onto the skid and install the trunnion tower closure plates, if required.*

13. *For the 32PT DSC only, drain the DSC/TC annulus.*

14. *For the 32PT DSC only, remove the interim cask top cover and replace with the standard top cask cover and torque bolts in star pattern. (This must be performed inside the fuel handling building.)*

    CAUTION: Per Technical Specification 4.4.6, during transfer operation of a loaded OS197L TC, every hour, visually monitor the outer top trailer shield vents and the opening around the cask ends for any sign of streaming which may indicate leakage of water from the cask neutron shield. If steaming is determined to be due to leakage of neutron shield water and not due to any rain or snow or other ambient conditions, then Licensee shall take appropriate corrective actions including terminating the transfer operation and returning the loaded cask to the fuel handling building for further assessment.

    The following step may be performed outside if the fuel building weight limits preclude placement of the outer top trailer shielding inside the fuel building (See Technical Specification 4.4.5 for restrictions). CAUTION: Verify that the requirements of Technical Specification 5.3.1b are met prior to next step.

15. *Install the outer top trailer shielding. During installation, the bottom most part of the body of the outer top shield shall not be hoisted by the crane more than 4 inches above the top horizontal plate of the inner top shield.*

16. *Perform radiation survey and verify that dose rates are consistent with the analysis provided in the UFSAR and are ALARA.*

W.8.1.6 *<u>DSC Transfer to the HSM</u>*

CAUTION: Per Technical Specification 4.4.6, during transfer operation of a loaded OS197L TC, every hour, visually monitor the outer top trailer shield vents and the opening around the cask ends for any sign of streaming which may indicate leakage of water from the cask neutron shield. If steaming is determined to be due to leakage of neutron shield water and not due to any rain or snow or other ambient conditions, then Licensee shall take appropriate corrective actions including terminating the transfer operation and returning the loaded cask to the fuel handling building for further assessment.

CAUTION: During the actual movement of the Transfer Cask on the transfer trailer to the ISFSI, the gap between the transfer trailer deck and bottom of the skid shall be monitored (visual inspection) to assure no significant blockage of airflow. Although blockage is improbable as over 60 feet of gap would require sealing, personnel shall maintain a visual scan of the trailer.

1. *Prior to transporting the cask to the ISFSI or prior to positioning the transfer cask at the HSM designated for storage, remove the HSM door using a porta-crane, inspect the cavity of the HSM, removing any debris and ready the HSM to receive a DSC. The doors on adjacent HSMs should remain in place.*

CAUTION: Very high dose rates in the empty HSM are expected if adjacent to a loaded HSM. Proper ALARA practices should be followed during these operations.

2. *Inspect the HSM air inlet and outlets to ensure that they are clear of debris. Inspect the screens on the air inlet and outlets for damage.*

   CAUTION: Verify that the requirements of Technical Specification 5.3.1b are met prior to next step.

3. *Using a suitable vehicle, transport the cask from the plant's fuel/reactor building to the ISFSI along the designated transfer route.*

4. *Once at the ISFSI, position the transport trailer to within several inches of the HSM.*

5. *Check the position of the trailer to ensure the centerline of the HSM and cask approximately coincide. If the trailer is not properly oriented, reposition the trailer, as necessary.*

6. *If not already installed, install the alignment targets, including the cast top centerline target through the trailer shielding.*

7. *Using crane, unbolt and remove the cask top cover plate.*

8. *Back the cask to within a few inches of the HSM, set the trailer brakes and disengage the tractor. Drive the tractor clear of the trailer. Extend the transfer trailer vertical jacks.*

9. *Connect the skid positioning system hydraulic power unit to the positioning system via the hose connector panel on the trailer, and power it up. Remove the skid tie-down bracket fasteners and use the skid positioning system to bring the cask into approximate vertical and horizontal alignment with the HSM. Using optical survey equipment and the alignment marks on the cask and the HSM, adjust the position of the cask until it is properly aligned with the HSM.*

10. *Using the skid positioning system, fully insert the cask into the HSM access opening docking collar.*

11. *Secure the cask trunnions to the front wall embedments of the HSM using the cask restraints.*

12. *After the cask is docked with the HSM, verify the alignment of the TC using the optical survey equipment.*

13. *Position the hydraulic ram behind the cask in approximate horizontal alignment with the cask and level the ram. Remove either the bottom ram access cover plate or the outer plug of the two-piece temporary shield plug if installed. Power up the ram hydraulic power supply and extend the ram through the bottom cask opening into the DSC grapple ring.*

14. *Activate the hydraulic cylinder on the ram grapple and engage the grapple arms with the DSC grapple ring.*

15. *Recheck all alignment marks in accordance with the Technical Specification 5.3.3 limits and ready all systems for DSC transfer.*

16. *Activate the hydraulic ram to initiate insertion of the DSC into the HSM. Stop the ram when the DSC reaches the support rail stops at the back of the module.*

17. *Disengage the ram grapple mechanism so that the grapple is retracted away from the DSC grapple ring.*

18. *Retract and disengage the hydraulic ram system from the cask and move it clear of the cask. Remove the cask restraints from the HSM.*

19. *Using the skid positioning system, disengage the cask from the HSM access opening.*

20. *Install the DSC axial in retainer through the HSM door opening.*

21. *Install the HSM door using a portable crane and secure it in place. Door may be welded for security. Verify that the HSM dose rates are compliant with the limits specified in Technical Specifications 5.4.1 and 5.4.2.*

22. *Replace the TC top cover plate. Secure the skid to the trailer, retract the vertical jacks and disconnect the skid positioning system.*

23. *Tow the trailer and cask to the designated equipment storage area. Return the remaining transfer equipment to the storage area.*

24. *Close and lock the ISFSI access gate and activate the ISFSI security measures.*

25. *Ensure the HSM maximum air exit temperature requirements of Technical Specification 3.1.4 are met.*

W.8.1.7 *Monitoring Operations*

1. *Perform routine security surveillance in accordance with the licensee's ISFSI security plan.*

2. *Perform one of the two alternate daily surveillance activities listed below:*

   a. A daily visual surveillance of the HSM air inlets and outlets to insure that no debris is obstructing the HSM vents in accordance with Technical Specification 5.2.5a requirements.

   b. A temperature measurement of the thermal performance, for each HSM, on a daily basis in accordance with Technical Specification 5.2.5b requirements.

W.8.2 Procedures for Unloading the Cask

The operational differences specified above for loading operations will also apply for unloading operations.

W.8.3 Identification of Subjects for Safety Analysis

No Change.

W.8.4 Fuel Handling Systems

No Change

W.8.5 Other Operating Systems

No Change.

W.8.6 Operation Support System

No Change.

W.8.7 Control Room and/or Control Areas

No Change.

W.8.8 Analytical Sampling

No Change.

W.8.9 References

8.1 *U.S. Nuclear Regulatory Commission, "Standard Format and Content for a Topical Safety Analysis Report for a Spent Fuel Dry Storage Container," Regulatory Guide 3.61 (February 1989).*

8.2 *U.S. Nuclear Regulatory Commission, Office of the Nuclear Material Safety and Safeguards, "Safety Evaluation of VECTRA Technologies' Response to Nuclear Regulatory Commission Bulletin 96-04 For the NUHOMS®-24P and NUHOMS®–7P.*

8.3 *U.S. Nuclear Regulatory Commission Bulletin 96-04, "Chemical, Galvanic or Other Reactions in Spent Fuel Storage and Transportation Casks," July 5, 1996.*

8.4 *SNT-TC-1A, "American Society for Nondestructive Testing, Personnel Qualification and Certification in Nondestructive Testing," 1992.*

8.5 *U.S. Nuclear Regulatory Commission , Interim Staff Guidance (ISG-22), "Potential Rod Splitting due to Exposures to an Oxidizing Atmosphere during Short-term Cask Loading Operations in LWR of Other Uranium Oxide Based Fuel."*

W.10 Radiation Protection

The shaded portion of Chapter W.10 provided in this FCN is for completeness and information only. It is part of Amendment 11 to be submitted to the NRC for review and approval. Therefore, the OS197L TC shall not be used until Amendment 11 to CoC 1004 is approved by the NRC.

As discussed in Section W.5, use of the OS197L TC does not significantly affect personnel dose rates (during closure operations, handling, or storage) or site boundary dose rates *during normal operations with supplemental shielding as described in Section W.1*. The OS197L TC is used only for loading/unloading and transfer operations, and the storage conditions are unchanged. Therefore, the personnel doses, occupational exposures and site bounding dose rates documented for each DSC/HSM storage configuration in Section 7.4 and Appendix K, Chapter K.10, Appendix L, Chapter L.10, Appendix M, Chapter M.10 and Appendix N, Chapter N.10 remain unchanged and are applicable to operations using the OS197L TC.

The use of the OS197L TC is not expected to have any significant impact on personnel dose rates during normal operation since the operations for placement and removal of bare OS197L TC from the fuel pool into the decontamination area shielding sleeve, placement and removal of the decontamination area shielding bell, engagement of the yoke to the cask trunnions, movement of the cask to the trailer, lowering of the cask onto the trailer and placement of the trailer shielding on the cask will be performed remotely using cameras and laser/target positioning.

Additional occupational exposures due to operations unique to the OS197L TC are evaluated in the following sections:

W.10.1 Recovery/Repair Operations due to Remote Handling Device Malfunction

The OS197L *TC* uses remote handling devices for movement of the TC during loading and transfer operations. In the event of a failure of the remote handling device an evaluation has been performed to assess the additional occupational exposure during recovery operations. This evaluation was performed using the dose rates from the OS197L TC when loaded with a NUHOMS® 32PT DSC. *The elements of the methodology utilized to perform this occupational exposure evaluation along with significant assumptions are also included herein. Three representative malfunction scenarios are evaluated:*

1) when the cask is being moved to the decontamination area (vertical position),

2) when the cask is being moved to the trailer area (horizontal position) and

3) same as previous with more bounding assumptions for distances.

For these events the crane is postulated to fail as the OS197L TC is being lowered onto *either the decontamination area or* the transfer trailer. *These three scenarios conservatively bound all other postulated malfunctions involving remote handling equipment like failure during the*

lowering of the decontamination area shield bell or supplemental inner top trailer shielding. Other malfunctions not involving the movement of the bar OS197L cask are not expected to contribute significantly to the occupational exposure and are bounded by the evaluations documented herein.

To recover from this event, the exposure to two *repair* workers is evaluated. The exposure is estimated when the repair personnel enter from a low dose area to access the crane for repair or recovery operations and during manual operations to lower the cask onto the *decontamination area shielding or on to the* transfer trailer. Once the cask is safely lowered, *then* normal operations can resume. *The exposure is estimated for all the three postulated scenarios.*

The main elements of the methodology are listed below:

- *Radial dose rates corresponding to the bare cask configuration with no water in the neutron shield at a distance of 3 ft above the cask top are utilized. These dose rates are expected during scenarios 2 and 3 and are conservative for scenario 1 where water is present in the neutron shield.*
- *Axial dose rates corresponding to the bare cask with the interim aluminum cask lid are utilized. These dose rates are conservative for scenario 1 since water is present in the neutron shield and in the DSC.*
- *Typical distances for manual operations are in the range of 10m from the cask surface. Since the evaluation is performed to determine the dose consequences during recovery operations of the failure of the crane, it is expected that the workers are in the vicinity of the crane and not the bare cask.*
- *Backscatter due to reflection from the walls, roof and floor of the building are considered in the evaluation of the occupational exposure. The backscatter correction is applied as a scaling factor to the dose rates and is a function of the size of the enclosure or area (where the cask is being handled). The backscatter correction for radial dose rates is less than 1.2. The backscatter correction for axial dose rates varies from 2 to 5 at distances from 1 m to 10 m. This factor increases at locations close to the wall or ceiling or other reflective surfaces. In general, for movement within enclosures (buildings or rooms) of the order of 10 m (including height of ceiling), the backscatter factors are lower than 2.5.*

The principal assumptions utilized to determine the occupational exposure are listed below:

- *For scenario 1, the manual repair/recovery operations are assumed to be performed at a distance of 3 ft from the top of the cask.*
- *For scenario 2, the manual repair/recovery operations are assumed to be performed at a distance of 50 ft from the side of the cask.*
- *For scenario 3, the manual repair/recovery operations are assumed to be performed at a distance of 40 ft from the side of the cask.*
- *A radial backscatter factor of 1.18 was utilized in scaling the dose rates at all distances. The radial neutron dose rates are scaled by a factor of 2.04 to account for the axial burnup profile, angular peaking and subcritcal multiplication. The radial gamma dose rates are scaled by a factor of 1.70 to account for angular peaking. This is conservative*

since, average dose rates are more appropriate for these operations instead of peak dose rates. These modeling assumptions effectively ensure that the scenario 2 and scenario 3 dose occupational exposure calculations are conservative.

- *An axial backscatter factor ranging from 1.46 to 4.25 is utilized in these calculations. The backscatter factor ranges between 4.25 and 2.25 at distances between 5m and 10m. The factor utilized at a distance of 1m (3.59) in scenario 1 calculation is highly conservative as the factor is lower at distances close to the cask surface. The use of non-conservative backscatter factors for axial distances greater than 10m does not affect the occupational exposure because the dose rate values are much lower – an order of magnitude lower than the radial dose rates.*

The dose rate distribution utilized in the occupational exposure calculations during crane malfunction evaluation is shown below. This dose rate distribution includes all the applicable peaking factors and backscatter scaling factors.

Distance from the Bare Cask		Radial Dose Rate	Axial Dose Rate
(meter)	(feet)	(mrem/hr)	(mrem/hr)
0	0	192	1,200
1	3	3,693	938
2	7	4,982	734
3	10	4,833	574
4.57	15	4,036	390
10	33	1,674	102
50.8	167	70	
100	328	15	

The additional occupational exposure associated with a recovery from a remote handling device failure is estimated to be *1) 970 person-mrem for scenario 1, 2) 956 person-mrem for scenario 2 and 3) 1,870 person*-mrem *for scenario 3. All these calculations conservatively exclude the credit due to ALARA practices such as the presence of temporary shielding or shielding barriers (ladders, equipment, scaffolding, walls etc) used by the repair/recovery personnel during the repair/recovery operations.*

The operational sequence involving the movement of the bare cask from the decontamination area to the trailer requires the installation of necessary equipment (as an example: long hoses with Swedge Lock quick connect fittings) to ensure that the DSC/TC annulus is essentially full of water and makeup can be provided in case of a malfunction during the movement of the OS197L TC. The required equipment is installed prior to the installation of the OS197L TC Interim top cover. The OS197L TC is in the decontamination area shield and therefore occupational exposure received for this activity is low. It is estimated that it will take one worker approximately 10 minute to connect the necessary equipment that will result in 20 mrem total exposure based on using side average surface dose rate of 120 mrem/hour on the decontamination area shield.

Transfer of the OS197L TC from the decontamination area to the trailer is a short duration activity which normally takes less than an hour. The makeup is required only if there is a malfunction during the movement of the bare OS197L TC from the decontamination area to the transfer skid. Proper ALARA practices will be used during any potential malfunction. In such a case, the OS197L TC will be suspended on the crane and dose rates from the side of the bare OS197L TC are very high. However, to connect the makeup water supply, the workers will be approaching the vertically suspended OS197L TC from the bottom where the dose rates are the same as OS197 TC due to same shielding configurations of both casks in the axial bottom direction. Since all the required equipment is pre staged before any movement of the cask, it is estimate that it will take less than 2 minutes to connect the makeup water supply to the quick connect fittings on the hoses. Using an average bottom surface dose rate of 300 mrem/hour, additional exposure for this activity is 10 mrem.

W.10.2 Inspection of Decontamination Shield Openings for Blockage

In addition to the operations that are performed using remote handling equipment, there are additional minor operational steps that are necessitated due to the OS197L TC. For example, an operational step is needed during decontamination operations to ensure that the "openings" in the decontamination area shield are not blocked. The bottom openings are located at the bottom radial location of the decontamination area shield and the top openings are located at the top radial location of the decontamination area shielding bell. The bare cask radial surface dose rates at these axial locations are conservatively employed to determine the dose rate fields. The average dose rate at the top opening location is less than 700 mrem/hour while that at the bottom opening location is less than 100 mrem/hour. Since this operation is of the order of a minute or less, the total contribution to the occupational exposure is less than 10 mrem. Workers are expected to follow the appropriate ALARA practices while performing this step, particularly at the top of the OS197L TC. It is to be noted that the dose rate at the top of the OS197L TC when enclosed by the decontamination area shield drops below 100 mrem/hour when a 10 cm distance is added. All these results are obtained from Section W.5.

W.10.3 Replacement of the Interim Cask Lid

When utilizing the OS197L with the 32PT DSC, an additional operational step that involves the use of an interim cask top lid while moving the TC from the decontamination area to the transfer trailer. The interim cask top lid is replaced with the regular lid once the supplemental inner top trailer shielding is in place. The maximum contact dose rate at the top of the interim cask lid is less than 850 mrem/hour and it drops to less than 175 mrem/hour at a distance of 2 m. Assuming that the replacement of the inner top lid with regular lid is of the order of a few minutes at contact distances, the contribution to the occupational exposure due to this operation is less than 50 mrem. This calculation also assumes that the workers are not directly in front of the cask while the temporary lid is being removed or the actual cask lid is being placed thereby following proper ALARA practices.

W.11 Accident Analyses

This section describes the postulated accident events that could occur during fuel loading, draining, drying, welding and transfer of the DSC using a NUHOMS® OS197L TC. Sections which do not affect the evaluation presented in Chapter 8 or Appendices K.11, L.11, M.11 and N.11 for various DSC designs are identified as "No change." Detailed analyses of the events are provided in other sections and are referenced herein.

W.11.1 Postulated Accidents

Only those accidents affecting the OS197L TC are addressed in this section. There is no change to accident evaluations affecting other NUHOMS® components.

W.11.1.1 OS197L TC Missile Impact Analysis

This event is described in Section 8.2.2.4. The OS197L TC uses a 2.68" steel shell in lieu of a 1.5" steel shell with a nominal 3.5" lead annulus and a 0.5" inner liner for OS197 TC. The missile impact analyses for the OS197 TC are therefore bounding for the OS197L TC.

W.11.1.2 Earthquake

This event is described in Section 8.2.3.D. The OS197L TC configuration (cg location, cask length, trunnion location and bottom forging configuration) does not significantly differ from that of the OS197 TC. The OS197L TC remains stable when subjected to the design basis earthquake.

W.11.1.2.1 OS197L TC in a Vertical Configuration during Vacuum Drying and Welding Operations

The bottom forging on which the cask is resting during vertical cask operations is the same size and configuration as the OS197 TC. The OS197L TC cg location is not significantly altered by the change in the cask shell configuration. The addition of the decontamination area shield will provide a larger diameter, more stable shell, outside the cask envelope, thereby potentially enhancing the OS197L TC seismic capacity.

W.11.1.2.2 OS197L TC in a Horizontal Configuration during Transfer Operations

The cask seismic stresses for the OS197L TC are bounded by the OS197 TC stresses due to the similar configurations of the cask ends (top and bottom forgings and covers) and larger thickness structural shell.

The trailer with the OS197L TC, with the additional shielding, remains stable for the design basis seismic accelerations.

W.11.1.3 OS197L TC Accidental Cask Drop

This event is described in Sections 8.2.5.2.B, D and E.

See Section W.3.1.3 for a discussion of the OS197L TC drop accident. This drop accident is bounded by the results for the OS197 TC drop accident discussed in Section 8.2.

W.11.1.4 Loss of Neutron Shield

This event is described in Section 8.2.5.3.

For the accident condition (the unlikely cask drop scenario) a complete loss of the OS197L TC neutron shield is postulated similar to the OS197 TC evaluation described in Section 8.2.5.3 with the DSC/TC annulus remaining dry. The analysis conservatively assumes that all the trailer shielding is lost. However, the trailer shield is fabricated using two sets of plate shields (the inside shield is 2.5" thick, the outside shield is 3" thick) which may be damaged in a drop but are unlikely to separate completely from the skid and cask. In addition, the neutron shield inner and outer shells are not credited in the accident condition models and the dose rates are calculated with a stainless steel thickness of 2.68 inches. This assumption is highly conservative and is beyond the design basis described in Section 8.2.5.3. A comparison of the dose rate results with the OS197L TC for the design basis accident as described in Section 8.2.5.3 (shown as "Bare Cask" configuration) and that utilized herein (to bound all accident dose rates for the OS197L TC, shown as "Bare Cask without neutron shield shells" configuration) is shown in the Table below. These results indicate that the predicted dose rates are conservative by a factor of 1.5.

Assuming the non-mechanistic drop scenario occurs and the trailer shields and the cask are dislodged completely from the trailer and skid, recovery actions are required to manipulate the shields or providing supplemental shielding to reduce dose rates to a reasonable value until a long term recovery plan is in place.

OS197L TC Accident Condition Dose Rates

Transfer Cask Configuration	Dose Rate Component	Dose Rates at Different Distances from Side Surface – Accident Condition No Neutron Shield			
		On Side Surface	4.57 meters (15')	100 meters	609.9 meters (2000')
		Dose Rate, mrem/hr	Dose Rate, mrem/hr	Dose Rate, mrem/hr	Dose Rate, mrem/hr
UFSAR (Table M.11-2)	Neutron	3,780	Not Calc.	Not Calc.	Not Calc.
	Gamma	1,070	Not Calc.	Not Calc.	Not Calc
	Total	4,640	Not Calc	Not Calc	0.01
OS197 TC	Neutron	1,282	66	0.067	1.87e-5
	Gamma	291	30	0.04	5.14e-5
	Total	1573	84	0.10	6.48e-5
OS197L TC (Bare Cask)	Neutron	3,176	157	0.17	8.18e-5
	Gamma	83,570	6,999	7.84	1.80e-2
	Total	86,691	7,152	8.00	1.81e-2
OS197L TC (Bare Cask without neutron shield shells)	Neutron	3,691	187	0.20	1.06e-4
	Gamma	134,328	11,576	12.7	3.19e-2
	Total	138,019	11,763	12.9	3.20e-2

The dose rates provided for the UFSAR configuration above are based on a 32PT DSC with design basis source terms inside an OS197 TC as modeled in the 2D DORT calculations documented in Appendix M.5. The dose rates provided for the OS197 configuration above are

based on a 32PT DSC with design basis source terms inside an OS197 TC as modeled using the 3D MCNP models described in W.5. The shielding analysis for the OS197 TC configuration presented in W.5 credits some additional shielding such as the 32PT DSC basket aluminum rails and other basket structures that were not included in the OS197 TC evaluation (see Appendix M.5.4) due to limitation of the previous analysis methods. The above data for the OS197L TC bare cask is for a 32PT DSC payload but is provided for evaluation of relative doses. The relative effect of the OS197L TC accident configuration with respect to the OS197 TC configuration with the 32PT DSC shown above is representative of the relative effect for all CoC 1004 licensed DSC payloads authorized for transfer with the OS197L TC.

The dose rates on the ends of the OS197L TC will be the same as the OS197 TC since the top and bottom forging and cover plate configurations have not been modified.

As shown in the table below, the dose rates at the controlled area boundary, assuming a 100 meter boundary, would be approximately 13 mrem/hr during the timeframe that the cask trailer shield is dislodged from the cask and until the trailer shield is repositioned. The 8 hours of recovery period assumed is appropriate because the repositioning of the trailer shields will be performed using lifting hardware pre-positioned prior to transfer operations. This will facilitate quick positioning using a crane to minimize the need for personnel to approach the cask. A comparison of the OS197 TC and OS197L TC accident dose analyses using the 32PT DSC as a representative payload is provided below:

Cask	Dose Rate (mrem/hour)				Recovery Period (hours)	Total Person-Dose (mrem)	
	Radial Contact	15 feet	100 meters	2000 feet		100 meters	2000 feet
UFSAR (Section M.11.2.5.3)	4,640	700	5.25	.011	8	N/A	0.09
OS197 TC	1,573	84	0.10	6.48e-5	8	0.8	5.184e-4
OS197L TC	138,019	11,763	12.9	0.032	8	103.2	0.25

The increase in dose rates at the controlled area boundary (100 meters) is significant between the OS197 TC and OS197L TC (approximately 130 times) values. However, the total dose at the 100 meter site boundary still remains very low (103 mrem) and below the regulatory limit of 5,000 mrem.

A review of the UFSAR for accident dose rates shows that the OS197 TC payload that produces the highest 100 meter dose rate, among the 24P, 52B, 24PT2, 61BT, 32PT and the 24PHB DSCs, is the 24PHB DSC (Appendix N.11). This is a 7 mrem/hr dose rate (Appendix N, Section N.11.2.5.3). As discussed in Section W.5, the controlling dose rates for the OS197L TC are due to gamma source terms. Even though, a significant dose rate contribution (>90%) is due to gamma sources and the gamma source terms for the 24PHB DSC and 32PT DSC described in Appendix N.5 and Appendix M.5 respectively, are comparable, the OS197L accident dose rates with the 32PT DSC are scaled by those with the 24PHB DSC for conservatism.

Using the ratio of UFSAR dose rate and OS197L TC dose rate from the table above results in a factor of 12.9/5.25=2.45. Applying this factor to the 7 mrem/hr dose rate for the 24PHB DSC results in a 100 meter dose rate for a 24PHB DSC within the OS197L TC of 2.45x7=18 mrem/hr. This dose rate, applied over the 8 hour period, results in a total person-dose of 18x8=144 mrem. The 144 mrem is approximately 3% of the 5000 mrem limit for offsite exposure. The thermal evaluation for this accident condition is included in Chapter W.4.

W.11.1.5 *Accidental Drop of Top Skid Shielding*

Placement of the inner and outer shields on the skid inside the fuel/reactor building is to be performed in accordance with the plant's heavy loads procedures. If a single failure proof crane is not used, the licensee is to evaluate the accident drop of the shields under 10CFR50.59 and 10CFR 72.212 and evaluate consequences of this accident drop.

In the case when fuel/reactor building floor load loads limit placement of both the inner and outer skid shields inside the fuel/reactor building, the outer top skid shield may be placed outside the fuel/reactor building. This condition is evaluated for accidental drop of the outer top skid shield onto the already mounted inner skid shield.

The stresses in the inner shield are evaluated in accordance with Subsection NF stress criteria for accident (Level D) conditions. For Level D loads, the Subsection NF stress criteria for accident loads use the Appendix F stress limits. Based on a conservative elastic analysis model used in the stress evaluation and using conservation of energy principles, the maximum drop height which will meet the level D stress limits is on the order of 4 inches. Thus, the movement of the outer shield over the skid is to be controlled such that the maximum drop height does not exceed 4 inches.

Enclosure 5 to TN E-25820

Lists of Changed UFSAR Pages Associated with Amendment 11

List of Changed Pages for UFSAR Main Chapters

FSAR Chapter 1, Page 1.3-7, Rev. 1

FSAR Chapter 3, Page 3.1-2, Rev. 0
FSAR Chapter 3, Page 3.1-3, Rev. 0
FSAR Chapter 3, Page 3.1-4, Rev1
FSAR Chapter 3, Page 3.1-6, Rev. 0
FSAR Chapter 3, Page 3.1-9, Rev1
FSAR Chapter 3, Page 3.3-33, Rev. 0
FSAR Chapter 3, Page 3.3-35, Rev. 0

FSAR Chapter 4, Pages 4.2-9 through 4.2-11 Rev 1

FSAR Chapter 4, Page 4.3-1, Rev. 0
FSAR Chapter 4, Page 4.7-4, Rev. 0
FSAR Chapter 4, Page 4.7-5, Rev. 1
FSAR Chapter 4, Page 4.7-6, Rev 1
FSAR Chapter 4, Page 4.8-3 through 4.8-6, Rev 1

FSAR Chapter 5, Page 5.1-2 , Rev. 0
FSAR Chapter 5, Pages 5.1-4 through 5.1-8, Rev. 0
FSAR Chapter 5, Pages 5.1-4 through 5.1-6, Rev 1
FSAR Chapter 5, Page 5.1-10, Rev. 0
FSAR Chapter 5, Page 5.1-11, Rev. 0
FSAR Chapter 5, Page 5.1-14, Rev. 0
Page 5.1-15, Rev 1
FSAR Chapter 5, Page 5.1-18, Rev. 0
FSAR Chapter 5, Page 5.4-1, Rev. 0
Page 5.6-1, Rev 1

FSAR Chapter 6, Page 6-1, Rev. 0

FSAR Chapter 8, Page 8.1-33, Rev. 0
FSAR Chapter 8, Page 8.1-48, Rev. 0
FSAR Chapter 8, Page 8.1-73, Rev. 0
FSAR Chapter 8, Pages 8.1-85 through 8.1-88, Rev. 0
FSAR Chapter 8, Page 8.2-44, Rev. 0

FSAR Chapter 10, Pages 10-1 through 10-25, Rev. 0
FSAR Chapter 10, Page 10-1, Rev 1
FSAR Chapter 10 Page 10-2, Rev 1
FSAR Chapter 10 Page 10-3, Rev 1
FSAR Chapter 10 Page 10-4, Rev 1
FSAR Chapter 10 Page 10-6, Rev 1
FSAR Chapter 10 Page 10-7, Rev 1
FSAR Chapter 10 Page 10-8, Rev 1
FSAR Chapter 10 Page 10-9, Rev 1
FSAR Chapter 10 Pages 10-11 through 10-35, Rev 1

List of Changed Pages for UFSAR Appendix H

Appendix H, Page H.1, Rev. 0

List of Changed Pages for UFSAR Appendix K

Appendix K.3, Page K.3.1-6 through K.3.1-8, Rev 1

Appendix K.4, Page K.4-9, Rev. 0
Appendix K.4, Page K.4-13, Rev. 0
Appendix K.4, Page K.4-17, Rev. 0
Appendix K.4, Page K.4-18, Rev. 0
Appendix K.4, Page K.4-25, Rev. 0
Appendix K.4, Page K.4-29, Rev. 0
Appendix K.8, Pages K.8-6 through K.8-12, Rev. 0
Appendix K.8, Pages K.8-6 through K.8-12, Rev 1
Appendix K.8, Page K.8-19, Rev 1
Appendix K.11, Page K.11-3, Rev. 0

List of Changed Pages for UFSAR Appendix L

Appendix L.4, Page L.4-3, Rev. 0
Appendix L.4, Page L.4-4, Rev. 0
Appendix L.4, Page L.4-6, Rev. 0
Appendix L.4, Page L.4-7, Rev. 0
Appendix L.4, Page L.4-19, Rev. 0
Appendix L.4, Page L.4-20, Rev. 0
Appendix L.4, Page L.4-22, Rev. 0
Appendix L.4, Page L.4-23, Rev. 0
Appendix L.4, Page L.4-33, Rev. 0
Appendix L.4, Page L.4-36, Rev. 0
Appendix L.4, Page L.4-37, Rev. 0
Appendix L.4, Page L.4-40, Rev. 0
Appendix L.4, Page L.4-41, Rev. 0
Appendix L.11, Page L.11-2, Rev. 0

List of Changed Pages for UFSAR Appendix M

Appendix M.2, Page M.2-2, Rev. 0
Appendix M.2, Page M.2-12, Rev. 0
Appendix M.3, Pages M.3.1-6 through M.3.1-8, Rev 1
Appendix M.4, Page M.4-2, Rev. 0
Appendix M.4, Page M.4-24, Rev. 0
Appendix M.4, Page M.4-30, Rev. 0
Appendix M.4, Page M.4-31, Rev. 0
Appendix M.4, Page M.4-47, Rev. 0
Appendix M.4, Pages M.4-60 through M.4-62, Rev. 0
Appendix M.4, Page M.4-68, Rev. 0
Appendix M.4, Page M.4-69, Rev. 0
Appendix M.4, Page M.4-85, Rev. 0
Appendix M.8, Page M.8-2, Rev. 0
Appendix M.8, Pages M.8-4 through M.8-11, Rev. 0
Appendix M.8, Page M.8-6, Rev 1
Appendix M.8, Pages M.8-17, Rev. 1
Appendix M.11, Page M.11-3, Rev. 0

List of Changed Pages for UFSAR Appendix N

Appendix N.2, Page N.2-2, Rev. 0
Appendix N.2, Page N.2-8, Rev. 0
Appendix N.4, Page N.4-2, Rev. 0
Appendix N.4, Page N.4-4, Rev. 0
Appendix N.4, Page N.4-7, Rev. 0
Appendix N.4, Page N.4-21, Rev. 0
Appendix N.4, Page N.4-22, Rev. 0
Appendix N.4, Page N.4-24, Rev. 0
Appendix N.4, Page N.4-28, Rev. 0
Appendix N.4, Page N.4-31, Rev. 0
Appendix N.4, Page N.4-32, Rev. 0
Appendix N.4, Page N.4-47, Rev. 0
Appendix N.4, Page N.4-48, Rev. 0
Appendix N.8, Pages N.8-1 through N.8-5, Rev. 0
Page N.8-3, Rev 1
Appendix N.8, Page N.8-8, Rev. 0
Appendix N.11, Page N.11-3, Rev. 0

List of Changed Pages for UFSAR Appendix P

Appendix P.2, Page P.2-3, Rev. 0
Appendix P.2, Page P.2-18, Rev. 0
Appendix P.3, Pages, P.3.1-8 through P.3.1-11, Rev 1
Appendix P.4, Page P.4-1, Rev. 0
Appendix P.4, Page P.4-9, Rev. 0
Appendix P.4, Page P.4-45, Rev. 0
Appendix P.4, Pages P.4-50 through P.4-52, Rev. 0
Appendix P.4, Page P.4-72, Rev. 0
Appendix P.4, Page P.4-87, Rev. 0
Appendix P.4, Page P.4-98, Rev. 0
Appendix P.4, Pages P.4-103 through P.4-106, Rev. 0
Appendix P.4, Page P.4-158, Rev. 0
Appendix P.8, Page P.8-2, Rev. 0
Appendix P.8, Pages P.8-4 through P.8-11, Rev. 0
Appendix P.8, Pages P.8-6 through P.8-7, Rev 1
Appendix P.8, Page P.8-6, Rev 1
Appendix P.8, Page P.8-7, Rev 1
Appendix P.8, Page P.8-16, Rev. 0
Appendix P.8 Page P.8-17, Rev 1
Appendix P.11, Page P.11-3, Rev. 0

List of Changed Pages for UFSAR Appendix R

Appendix R.4, Page R.4-4, Rev. 0

List of Changed Pages for UFSAR Appendix T

Appendix T.3, Pages T.3.1-7 through 3.1-9, Rev 1

Appendix T.4, Page T.4-34, Rev. 0
Appendix T.8, Page T.8-2, Rev. 0
Appendix T.8, Pages T.8-4 through T.8-9, Rev. 0
Appendix T.8, Page T.8-5, Rev 1
Appendix T.8, Page T.8-6, Rev 1
Appendix T.8, Page T.8-7, Rev 1
Appendix T.8, Page T.8-8, Rev 1
Appendix T.8, Page T.8-9, Rev 1
Appendix T.8, Page T.8-11, Rev. 0
Appendix T.8, Page T.8-12, Rev.1
Appendix T.9, Page T.9-3, Rev. 0
Appendix T.9, Page T.9-6, Rev. 1
Appendix T.9, Page T.9-9, Rev. 0
Appendix T.9, Page T.9-10, Rev. 0
Appendix T.9, Page T.11-3, Rev. 0

List of Changed Pages for UFSAR Appendix U

Appendix U.8, Page U.8-2, Rev. 0

Appendix U.3, Pages U.3.1-8 through 3.1-11, Rev 1
Appendix U.8, Pages U.8-4 through U.8-12, Rev. 0
Appendix U.8, Page U.8-5, Rev 1
Appendix U.8, Page U.8-6, Rev 1
Appendix U.8, Page U.8-7, Rev 1
Appendix U.8, Page U.8-8, Rev 1
Appendix U.8, Page U.8-9, Rev 1
Appendix U.8, Page U.8-12, Rev 1
Appendix U.8, Page U.8-17, Rev. 0
Appendix U.9, Page U.9-3, Rev. 0
Appendix U.9, Page U.9-6, Rev. 1
Appendix U.9, Page U.9-9, Rev. 0
Appendix U.9, Page U.9-10, Rev. 0
Appendix U.11, Page U.11-3, Rev. 0

List of Changed Pages for UFSAR Appendix W

Appendix W.1, Page W.1-3, Rev. 0
Drawing NUH03-8011 Rev 0A
Drawing NUH03-8012 Rev 0A
Appendix W.2, Pages W.2-1 through W.2-4 Rev 1
Appendix W.3, Pages W.3-1 through W.3-2, Rev 1
Appendix W.3, Pages W.3-4 through W.3-12, Rev 1
Appendix W.4, Pages W.4-3 through W.4-11, Rev. 0
Appendix W.4, Pages W.4-13 through W.4-39, Rev. 0
Appendix W.5, Pages W.5-1 through W.5.-33, Rev 1
Appendix W.8, Pages W.8-1 through W.8-29, Rev. 1
Appendix W.10, Pages W.10-1 through W.10-4, Rev. 1
Appendix W.11, Pages W.11-1 through W.11-4, Rev 1
Appendix W.12, Page W.12-1, Rev. 0