Dominion Nuclear Connecticut, Inc.
5000 Dominion Boulevard, Glen Allen, Virginia 23060
Web Address: www.dom.com

Dominion®

December 27, 2007

U.S. Nuclear Regulatory Commission
Attention: Document Control Desk
Washington, DC 20555

Serial No.	07-0793
MPS Lic/MLC	R1
Docket Nos.	50-336
	50-423
License No.	DPR-65
	NPF-49

DOMINION NUCLEAR CONNECTICUT, INC.
MILLSTONE POWER STATION UNITS 2 AND 3
IN-SERVICE TESTING PROGRAM FOR PUMPS AND VALVES
FOURTH AND THIRD 10-YEAR INTERVAL UPDATES FOR UNITS 2 AND 3

Dominion Nuclear Connecticut, Inc. (DNC) submits the fourth interval Inservice Testing (IST) program for Millstone Power Station Unit 2 (MPS2) and third interval IST program for Millstone Power Station Unit 3 (MPS3). Pursuant to 10 CFR 50.55a(f)(4)(ii), the IST programs were updated to comply with the ASME Code for Operation and Maintenance of Nuclear Power Plants 2001 Edition through 2003 Addenda.

The relief requests contained in the fourth IST interval for MPS2 (Attachments 1 and 2) and third IST interval for MPS3 (Attachments 3 and 4) are submitted for NRC review and approval, pursuant to 10 CFR 50.55a(f)(5)(iii). Prior NRC approval is required before the relief requests can be implemented. For MPS2, there are two relief requests for pumps (P-001 through P-002) and two relief requests for valves (V-001 through V-002). For MPS3, there are four relief requests for pumps (P-001 through P-004) and one relief request for valves (V-001). A complete description of the MPS2 and MPS3 IST program plans are included as Attachments 5 and 6, respectively.

By a letter dated December 7, 2007 (Serial No. 07-0789), DNC informed the NRC staff of changes in the end date for MPS2 and MPS3 third and second 10-year IST intervals, respectively. The fourth IST interval for MPS2 and third IST interval for MPS3 start on December 2, 2008 for both units. Therefore, NRC approval of the IST programs' relief requests is requested by October 31, 2008. The remaining portions of the IST programs are within the provisions of the code and require no NRC approval for implementation.

If you have any questions or require additional information, please contact Margaret Earle at (804) 273-2768.

Sincerely,

Gerald T. Bischof
Vice President – Nuclear Engineering

A047
NRR

Attachments:

1. MPS2 Fourth IST Interval Pump Relief Requests
2. MPS2 Fourth IST Interval Valve Relief Requests
3. MPS3 Third IST Interval Pump Relief Requests
4. MPS3 Third IST Interval Valve Relief Requests
5. MPS2 IST Program, Fourth 10-Year Interval
6. MPS3 IST Program, Third 10-Year Interval

Commitments made in this letter: None

cc: U.S. Nuclear Regulatory Commission (w/o attachments)
Region I
475 Allendale Road
King of Prussia, PA 19406-1415

Ms. C. J. Sanders (w/o attachments)
NRC Project Manager, Mail Stop 8B3
U.S. Nuclear Regulatory Commission
One White Flint North
11555 Rockville Pike
Rockville, MD 20852-2738

Mr. S. W. Shaffer (w/o attachments)
NRC Senior Resident Inspector
Millstone Power Station

ATTACHMENT 1

MILLSTONE POWER STATION, UNIT 2
FOURTH INSERVICE TESTING (IST) INTERVAL
PUMP RELIEF REQUESTS

DOMINION NUCLEAR CONNECTICUT, INC.
MILLSTONE POWER STATION UNIT 2

Millstone Power Station, Unit 2

Fourth IST Interval

Pump Relief Request Index

Relief Request No.	Description	NRC Approval Date
P-001	Categorization of LPSI Pumps as Group A/B	
P-002	Use of Code Case OMN-6 for Digital Instruments	

10 CFR 50.55a Request Number P-001

Categorization of the LPSI Pumps as Group A/B

Proposed Alternative
In Accordance with 10CFR50.55a(a)(3)(i)

Alternative Provides an Acceptable Level of Quality and Safety

ASME Code Component(s) Affected

P-42A	Low Pressure Safety Injection (LPSI) Pump A
P-42B	Low Pressure Safety Injection (LPSI) Pump B

Applicable Code Edition and Addenda

ASME OM Code 2001 Edition through 2003 Addenda

Applicable Code Requirement(s)

ISTB-1400(b), "identify each pump to be tested in accordance with the rules of this Subsection and categorize it as either a Group A or Group B pump and list the pumps in the plant records (see ISTB-9000). A pump that meets both Group A and Group B definitions shall be categorized as a Group A pump."

Reason for Request

Pursuant to 10 CFR 50.55a, "Codes and Standards", paragraph (a)(3)(i), relief is requested from the requirement of ASME OM Code ISTB-1400(b). This relief will result in testing the LPSI pumps as Group B during power operations versus Group A. This proposed relief will result in a lower potential for pump degradation due to pump wear while still being capable of measuring pump performance. The basis of the relief request is that the proposed alternative would provide an acceptable level of quality and safety.

The LPSI pumps meet the categorization requirements of Group A pumps in that they are operated routinely during plant shutdowns and refueling outages. However, these pumps also meet the requirements of Group B, in that during normal operation (reactor critical) they are not operated except for testing.

These pumps are centrifugal type pumps required for LPSI and to provide reactor core cooling during the cooldown phase of shutdown cooling. During normal power operations, the LPSI pump is in a standby condition and is considered an essential part of the Emergency Core Cooling System (ECCS). The pump starts automatically upon receipt of a safety injection signal taking suction from the Refueling Water Storage Tank (RWST) during the injection phase of an accident. The pump discharges to the Reactor Coolant System (RCS).

ASME ISTB-1400(b) states that if a pump meets both Group A and Group B definitions, it shall be categorized as a Group A pump. The LPSI pumps are currently tested during normal operation, using the minimum flow recirculation loop.

10 CFR 50.55a Request Number P-001

The design flow rate of the LPSI pump is 3000 gpm. This flow rate can only be achieved during shutdown periods when injection into the RCS at a reduced pressure is possible.

Classifying these pumps as Group B during power operation minimizes the time required to perform quarterly testing. The 2001/2003 ASME Code testing requirements eliminate the two-minute minimum pump run-time for quarterly Group B pump tests. Eliminating the minimum pump run-time requirement and the requirement to record flow and vibration levels is expected to reduce the length of each quarterly pump test and the accompanying unavailability time for these pumps. Since these pumps are not operated routinely during plant operation, except for required surveillance testing, there is no time or wear related degradation mechanism that would warrant performing more detailed quarterly tests on the LPSI pumps.

NUREG/CP-0137, Vol. 1, Proceedings of the Third NRC/American Society of Mechanical Engineers (ASME) Symposium on Valve and Pump Testing, includes a paper entitled, "Description of Comprehensive Pump Test Change to ASME Code, Subsection ISTB." This paper details the philosophy of classifying pumps as Group A or Group B. According to the author, the intent of having different test requirements for different pump groups is to relate the requirements for the amount and degree of quarterly performance monitoring to the amount of degradation expected based on pump operation.

Testing the LPSI pumps quarterly as Group A pumps during power operation is contrary to the philosophy of the referenced paper. Quarterly Group A testing subjects these pumps to increased test requirements and performance monitoring. Also, this testing introduces the potential for more degradation due to pump wear (caused by low-flow operation) at the time when they are standby pumps and would not otherwise be subject to operation-induced degradation. Group A testing during power operation may be more detrimental to the long-term health of these components than Group B testing.

Proposed Alternative and Basis for Use

Millstone proposes that the LPSI pumps (P-42A and P-42B) be tested as standby pumps (Group B) during power operation and as continuously operating pumps (Group A) during refueling operations. During refueling operations, the Comprehensive pump test may be substituted for a quarterly Group A test that comes due. Millstone further proposes that any time a Comprehensive pump test is performed; the code-required quarterly low-flow test (Group B) requirement may be deleted for that quarter.

Using the provisions of this relief request as an alternative to the specific requirements of ISTB-1400(b) identified above will provide adequate indication of pump performance and continue to provide an acceptable level of quality and safety. Therefore, pursuant to 10 CFR 50.55a(a)(3)(i) relief is requested from the specific ISTB requirements identified in this request.

This alternative provides an acceptable level of quality and safety.

10 CFR 50.55a Request Number P-001

Duration of Proposed Alternative

This proposed alternative will be utilized for the fourth 10-year interval.

Precedents

Similar relief requests were previously approved;

PR-12 was previously approved for Calvert Cliffs Nuclear Power Plant on May 16, 2002 (TAC Nos. MB3782 and MB3783)

PR-04 was previously approved for Three Mile Island on July 7, 2005 (TAC No.MC2558)

10 CFR 50.55a Request Number P-002

Use of Code Case OMN-6 for Digital Instruments

Proposed Alternative
In Accordance with 10CFR50.55a(a)(3)(i)

Alternative Provides an Acceptable Level of Quality and Safety

ASME Code Component(s) Affected

Various digital instruments used for IST of pumps

Applicable Code Edition and Addenda

ASME OM Code 2001 Edition through 2003 Addenda

Applicable Code Requirement(s)

ISTB-3510(b)(2), "digital instruments shall be selected such that the reference value does not exceed 70% of the calibrated range of the instrument."

Reason for Request

Pursuant to 10 CFR 50.55a, "Codes and Standards", paragraph (a)(3)(i), relief is requested from the requirement of ASME OM Code ISTB-3510(b)(2). This request is to allow the use of ASME Code Case OMN-6, Alternate Rules for Digital Instruments.

Code Case OMN-6 allows the use of digital instruments where the reference value does not exceed 90% of the calibrated range of the instrument. Code Case OMN-6 applies to the 1990 Edition through the 1997 Addenda. Millstone will implement the 2001 Edition through 2003 Addenda of the ASME OM Code for it's fourth 10-year Interval.

Proposed Alternative and Basis for Use

By using Code Case OMN-6, greater flexibility in the selection of instruments would be achieved, thus preventing the installation of multiple instruments to monitor the same parameter during testing. Digital instruments will be selected such that the reference value does not exceed 90% of the calibrated range of the instrument.

NUREG-1482, Revision 1, Section 5.5 states that....."The NRC has accepted Code Case OMN-6 as specified in Reg Guide 1.192, which allows each digital instrument to be such that the reference values do not exceed 90 percent of the calibrated range of the instrument."

Use of Code Case OMN-6, approved by the NRC in Reg Guide 1.192, will provide at least equivalent instrumentation accuracy requirements for the required pump testing parameters to be measured in the IST program and will provide results consistent with code requirements. This will provide adequate assurance of acceptable pump performance.

10 CFR 50.55a Request Number P-002

Using the provisions of this relief request as an alternative to the specific requirements of ISTB-3510(b)(2) identified above will provide adequate indication of pump performance and continue to provide an acceptable level of quality and safety. Therefore, pursuant to 10 CFR 50.55a(a)(3)(i) relief is requested from the specific ISTB requirements identified in this request.

This alternative provides an acceptable level of quality and safety.

Duration of Proposed Alternative

This proposed alternative will be utilized for the fourth 10-year interval.

Precedents

Similar relief requests were previously approved;

P-RR-3 was previously approved for Diablo Canyon Power Plant on January 30, 2006 (TAC Nos. MC6632 and MC6633)

RP07 was previously approved for Columbia Generating Station on March 23, 2007 (TAC Nos.MD3537, MD3538, MD3539, MD3541, MD3542, MD3550, MD3551 and MD3552)

ATTACHMENT 2

MILLSTONE POWER STATION, UNIT 2
FOURTH INSERVICE TESTING (IST) INTERVAL
VALVE RELIEF REQUESTS

DOMINION NUCLEAR CONNECTICUT, INC.
MILLSTONE POWER STATION UNIT 2

Millstone Power Station, Unit 2

Fourth IST Interval

Valve Relief Request Index

Relief Request No.	Description	NRC Approval Date
V-001	RWST Back-leakage Valves Leakage Test Frequency	
V-002	Firewater to AFW Pump Suction Header Manual Valve Test Frequency	

10 CFR 50.55a Request Number V-001

RWST Back-Leakage Valves Leakage Test Frequency

Proposed Alternative
In Accordance with 10 CFR 50.55a(a)(3)(ii)

Hardship or Unusual Difficulty without a Compensating Increase in Level of Quality or Safety

ASME Code Component(s) Affected

Valve Number	Class	Category	Function
2-CS-14A	2	AC	RWST Outlet Header Check Valve
2-CS-14B	2	AC	RWST Outlet Header Check Valve
2-CS-050	2	A	Cont Spray to Recirc Isolation Valve
2-CS-051	2	A	Cont Spray to Recirc Isolation Valve
2-SI-459	2	A	SIS Test Header Downstream Isolation
2-SI-460	2	A	LPSI /Containment Spray Test Header Stop Valve
2-SI-659	2	A	ESF Pumps Min Flow Recirculation Header Isolation Valve
2-SI-660	2	A	ESF Pumps Min Flow Recirculation Header Isolation Valve

Applicable Code Edition and Addenda

ASME OM Code 2001 Edition through 2003 Addenda

Applicable Code Requirement

ISTC-3630(a) Leakage Rate for Other Than Containment Isolation Valves. Category A valves with a leakage requirement not based on an owner's 10 CFR 50, Appendix J program, shall be tested to verify their seat leakages within acceptable limits. Valve closure before seat leakage testing shall be by using the valve operator with no additional closing force applied.

(a) Frequency. Tests shall be conducted at least once every two years.

Reason for Request

Pursuant to 10 CFR 50.55a, "Codes and Standards", paragraph (a)(3)(ii), relief is requested from the requirement of ASME OM Code ISTC-3630(a). ISTC-3630(a) requires leakage testing of Category A valves, other than containment isolation valves, on a 2-year frequency.

Based on past leakage testing history of these valves, Millstone proposes adoption of the performance based Appendix J, Option B frequencies.

10 CFR 50.55a Request Number V-001

Given the associated hardship, testing of these valves each refueling does not provide a compensating increase in the level of quality or safety for the following reasons:

1. Performance of the seat leakage tests each refueling outage has a significant impact on generation of radwaste, radiation exposure, outage schedule and resources.
2. Testing of 2-SI-460 requires a freeze seal that requires significant planning and coordination to ensure safe working conditions are maintained.
3. The train specific valves 2-CS-14A and 2-CS-14-B are tested by involving a significant amount of system tagging and unavailability of both trains of RWST supply.

Proposed Alternative and Basis for Use

These valves are required to close or remain closed to prevent back-leakage to the Refueling Water Storage Tank (RWST) during the recirculation phase of a Loss-of-Coolant Accident (LOCA). The subject valves function as a system during the sump recirculation phase of a LOCA to prevent backflow into the RWST, thus, limiting the potential for release of radioactivity from containment to the atmosphere. The RWST is vented to atmosphere. The total allowed leakage limit and thus the assumed release from this system of valves, is based on the calculated site boundary dose limits and control room habitability limits. Individual leak rates of the subject valves can vary as long as the total back-leakage from the valves into the RWST is maintained within the assumed calculation limits.

Administrative leakage limits have been calculated for each of the subject valves. These limits, as well as historical leakage results, are shown in Table 1 (see Page 4 of this attachment). Measured leakages have been well below the administrative limits over the past several tests. This data indicates reasonable assurance that the valves will perform their intended function, and that leakage rates will not exceed the administrative limits from test to test. Therefore, extension of the test frequency is warranted.

Seat leakage testing of these valves requires draining/venting of radioactive fluid and the processing of significant amounts of contaminated water (radwaste) to perform the required test. In addition, radiological exposure (approximately 50 millirem per person) will be accumulated for test personnel. Performance of the seat leakage tests each refueling outage has a significant impact on outage schedule and resources.

Testing of 2-SI-460 requires a freeze seal to be established on the 6-inch header piping. This is necessary to provide a valve test boundary. This task requires significant planning and coordination to ensure safe working conditions are maintained.

The train specific valves 2-CS-14A and 2-CS-14B are tested by involving a significant amount of system tagging and unavailability of both trains of RWST supply. MPS2 refueling outages are scheduled to concentrate work on the out-of-service train, while protecting the in-service train, thus maintaining adequate shutdown risk safety margins. This relief would therefore result in testing being performed on only the out-of-service train, minimizing work on the protected train.

10 CFR 50.55a Request Number V-001

Millstone proposes that the subject valves be exempt from the 2-year leak test frequency requirement of ISTC-3630(a) for Category A valves whose closing function prevents back-leakage to the RWST during post-LOCA sump recirculation and tested as follows:

- 2-CS-14A/B will be tested every other refueling
- The remainder of these valves will be tested every 60 months
- Test frequencies will be doubled upon failure of administrative criteria until two successive acceptable tests are recorded

Performance based frequency of testing implemented by Option B to Appendix J of 10CFR50 is applicable to these valves, whose function is isolation of the extended containment boundary while on sump recirculation.

Duration of Proposed Alternative

This proposed alternative will be utilized for the fourth 10-year interval.

Precedents

This relief request was previously approved for a similar request in third 10-year interval at MPS2 as V-006, dated February 24, 2003 (TAC Nos. MB6482 and MB6483).

Table 1

Leakage Limits/Results

Valve Number	Administrative Limit	1998 Measured Leakage	2000 (2R13) Measured Leakage	2002 (2R14) Measured Leakage	Last Test	Refueling Last Tested
2-CS-14A	7.0 gpm	0.714 gpm	0.600 gpm	0.800 gpm	0.700 gpm	2R17
2-CS-14B	7.0 gpm	0 gpm	0 gpm	0.1 gpm	0	2R16
2-CS-050	0.01 gpm	0.00007 gpm	0.00005 gpm	See note	0.0008 gpm	2R16
2-CS-051	0.01 gpm	0.0001 gpm	0.00012 gpm	See note	0.0002 gpm	2R16
2-SI-459	0.02 gpm	See note	See note	0.0017 gpm	0.0015 gpm	2R17
2-SI-460	0.05 gpm	0 gpm	0.0008 gpm	0 gpm	0 gpm	2R17
2-SI-659	0.12 gpm	0.0016 gpm	0.007 gpm	0.024 gpm	0.0003 gpm	2R17
2-SI-660	0.12 gpm	0.0035 gpm	0.016 gpm	0.027 gpm	0.028 gpm	2R17

Note: 2-CS-050 and 2-CS-051 are two parallel valves in series with 2-SI-459. Both valves were historically tested in lieu of testing 2-SI-459. 2-SI-459 will be the normally tested valve in this path, with the ability to test 2-CS-050 and 2-CS-051 maintained as an alternative.

10 CFR 50.55a Request Number V-002

Firewater to AFW Pump Suction Header Manual Valve Test Frequency

Proposed Alternative
In Accordance with 10 CFR 50.55a(a)(3)(ii)

Hardship or Unusual Difficulty without a Compensating Increase in Level of Quality or Safety

ASME Code Component(s) Affected

Valve Number	Class	Category	Function
2-FIRE-94A	3	B	"A" Aux Feed Pump Emergency Firewater Supply Valve
2-FIRE-94B	3	B	"B" Aux Feed Pump Emergency Firewater Supply Valve
2-FIRE-94C	3	B	Turbine Auxiliary Feed Pump Emergency Firewater Supply Valve

Applicable Code Edition and Addenda

ASME OM Code 2001 Edition through 2003 Addenda

Applicable Code Requirement

ISTC-3540 Manual Valves. Manual valves shall be full stroke exercised at least once every five years, except where adverse conditions exist. 10CFR 50.55a(B)(3)(vi) reduces this frequency from 5-years to 2-years.

Reason for Request

Pursuant to 10 CFR 50.55a, "Codes and Standards", paragraph (a)(3)(ii), relief is requested from the requirement of ASME OM Code ISTC-3540, as modified by 10CFR 50.55a(B)(3)(vi), which requires exercise of manual valves on a 2-year frequency.

Millstone proposes to place these valves in a sample exercise program and exercise one valve each refuel outage in lieu of a full stroke exercise every two years.

Given the associated hardship, testing of these valves each refueling does not provide a compensating increase in the level of quality or safety for the following reasons:

1. Manual cycling the valves would result in chemical and particulate contamination of the AFW system and/or CST.

10 CFR 50.55a Request Number V-002

2. Testing involves significant maintenance preparation and restoration activities, including temporary piping modifications, proper disposal of the chlorinated firewater, and extensive system flushing after valve cycling.

3. Cycling of all three valves at each refueling would negatively impact the outage schedule and the availability of AFW pumps to support this function.

Proposed Alternative and Basis for Use

The normally closed 6-inch manually operated gate valves serve as the Firewater/Auxiliary Feedwater (AFW) system boundary valves. The normally isolated firewater system provides an alternate source of water to the AFW pumps during long term cooling in the event the normal condensate storage tank (CST) supply is depleted. An 8-inch firewater header supplies the three parallel 6-inch lines, one for each of the three AFW pumps, which tie directly into the normal AFW pump suction paths from the CST. There is no drain path available between the 8-inch header and the three 6-inch isolation valves.

Manual full stroke testing is a burden since the firewater discharge flow path goes directly to the suction of the AFW pumps and cycling the valves would result in chemical and particulate contamination of the AFW system and/or CST. As a result, a spool piece in each AFW pump suction line must be removed and the firewater routed away from the AFW system using temporary piping. This involves significant maintenance preparation and restoration activities, including temporary piping modifications, proper disposal of the chlorinated firewater, and extensive system flushing required after each valve cycle to insure the AFW system does not become contaminated when restored. One motor driven AFW pump is required to be available during outages to supply emergency makeup to the spent fuel pool. Cycling of all three valves at each refueling would negatively impact the outage schedule and the availability of AFW pumps to support this function. There have been no identified problems from historical testing of these valves during the third 10-year interval.

Millstone proposes testing 2-FIRE-94A/B/C on a sample frequency of one valve in the group each refuel cycle. These valves are the same size and model from the same manufacturer, and are installed in the same application and orientation, meeting the grouping methodology allowed in NUREG 1482 for check valve testing. One valve in the group will be manually full stroked every refueling outage, and all the valves in the group will be manually full stroked within three refueling cycles. If any valve is incapable of being full stroke exercised, the remaining valves in the group will be manually full stroke tested in the same outage. A full stroke exercise test will be performed after any maintenance that could affect the full stroke capability of the valve.

This alternative test plan avoids undue hardship, lessens the unavailability of safety equipment required during outages, and is adequate to meet the fundamental objective of detecting degradation.

10 CFR 50.55a Request Number V-002

Duration of Proposed Alternative

This proposed alternative will be utilized for the fourth 10-year interval.

Precedents

This relief request was previously approved for a similar request in third 10-year interval at MPS2 as R-001, dated May 9, 2001 (TAC No. MA9162).

ATTACHMENT 3

MILLSTONE POWER STATION, UNIT 3
THIRD INSERVICE TESTING (IST) INTERVAL
PUMP RELIEF REQUESTS

DOMINION NUCLEAR CONNECTICUT, INC.
MILLSTONE POWER STATION UNIT 3

Millstone Power Station, Unit 3

Third IST Interval

Pump Relief Request Index

Relief Request No.	Description	NRC Approval Date
P-001	Safety Injection Pump Cooling Pump Flow Measurement	
P-002	Categorization of Residual Heat Removal Pumps as Group A/B	
P-003	Use of Code Case OMN-6 for Digital Instruments	
P-004	Use of Code Case OMN-9 for Use of Pump Curves	

10 CFR 50.55a Request Number P-001

Safety Injection Pump Cooling Pump Flow Measurement

Proposed Alternative
In Accordance with 10CFR50.55a(a)(3)(ii)

Hardship or Unusual Difficulty without a Compensating Increase in Level of Quality or Safety

ASME Code Component(s) Affected

3CCI*P1A Safety Injection Pump Cooling (CCI) Pump A
3CCI*P1B Safety Injection Pump Cooling (CCI) Pump B

Applicable Code Edition and Addenda

ASME OM Code 2001 Edition through 2003 Addenda

Applicable Code Requirement(s)

ISTB-5122 Group B Test Procedure

ISTB-5123 Comprehensive Test Procedure

Table ISTB-5100-1, Centrifugal Pump Test Acceptance Criteria

Reason for Request

Pursuant to 10 CFR 50.55a, "Codes and Standards", paragraph (a)(3)(ii), relief is requested from the requirement of ASME OM Code for measuring and recording pump flow. Due to system design and lack of an instrumented minimum flow line, total pump flow cannot be measured during the Group B or Comprehensive pump tests.

The CCI system is designed to provide 9.5 gpm cooling flow to the Safety Injection Pump Lube Oil cooler. Since the original design flow was approximately 21 gpm and the pump rated flow is 25 gpm, the minimum flow recirculation line was designed with an orifice sized to pass 15 gpm. However, the minimum flow recirculation lines were not designed to allow flow measurement with either permanent or temporary instrumentation that would meet ASME Code requirements. The total length of straight pipe for the 3CCI*P1A and 3CCI*P1B recirc lines is approximately 28 inches and 21 inches, respectively, which is insufficient length to install flow measurement equipment. These lines were also not designed to be isolated. As a result, the majority of pump flow during IST pump testing is unmonitored. Figure 1 contains a sketch of the system.

Given the associated hardship, monitoring the minimum recirculation line flow rate does not provide a compensating increase in the level of quality or safety for the following reasons:

10 CFR 50.55a Request Number P-001

1. Without the ability to isolate the minimum flow recirculation lines or to measure flow directly, the majority of CCI pump flow cannot be measured without implementing system design modifications.

2. Any increase in recirculation flow (i.e., increase in orifice size) would result in a reduction in pump differential which would be conservatively identified as pump degradation.

3. A complete obstruction of this unmonitored recirculation flow could only increase pump differential (i.e., mask pump degradation) by an amount less than 3.7% because the pump head versus flow characteristics are relatively flat over the normal operating range for these pumps.

Proposed Alternative and Basis for Use

Since the pump head versus flow characteristics are relatively flat over the normal operating range for these pumps (see Figure 2, Pump Curve), the change in pump differential pressure from rated flow to the shutoff head condition is approximately 3.7%. As a result, a complete obstruction of this unmonitored recirculation flow could only increase pump differential (i.e. mask pump degradation) by an amount less than 3.7%. To account for a complete obstruction of pump recirculation flow, the lower acceptance criteria for differential pressure will be raised from 90% to 94% for both the Group B and Comprehensive tests. Any increase in recirculation flow, i.e. increase in orifice size, would result in a reduction in pump differential which would be conservatively identified as pump degradation.

Although the minimum flow recirculation lines do not have provisions for isolation, the potential to block flow by installing a blind flange in the restriction orifice was investigated. Full flow data from the Generic Letter 89-13 Test Program indicated that a maximum of 11 -12 gpm is obtained with all valves wide open. Since the minimum flow requirement for the pump is 15 gpm, this flow would not be adequate to protect the pump from damage. Without the ability to isolate the minimum flow recirculation lines or to measure flow directly, the majority of CCI pump flow cannot be measured without implementing system design modifications.

During IST pump tests, for both the quarterly Group B and biennial Comprehensive, the system will be throttled to a reference flow of 10 gpm, +/- 0.2 gpm with an unmonitored recirculation flow of approximately 15 gpm. The pump differential pressure will then be recorded and compared to the ASME Code lower acceptance criteria raised from 90% to 94% for both the Group B and Comprehensive tests.

Using the provisions of this relief request as an alternative to the specific requirements of ISTB-5122 and ISTB-5123 identified above will provide an acceptable level of quality and safety.

Duration of Proposed Alternative

This proposed alternative will be utilized for the third 10-year interval.

10 CFR 50.55a Request Number P-001

Precedents

This relief request was previously approved for a similar request in second 10-year interval at MPS3 as P-002, dated February 16, 1999 (TAC No. MA3521).

Figure 1

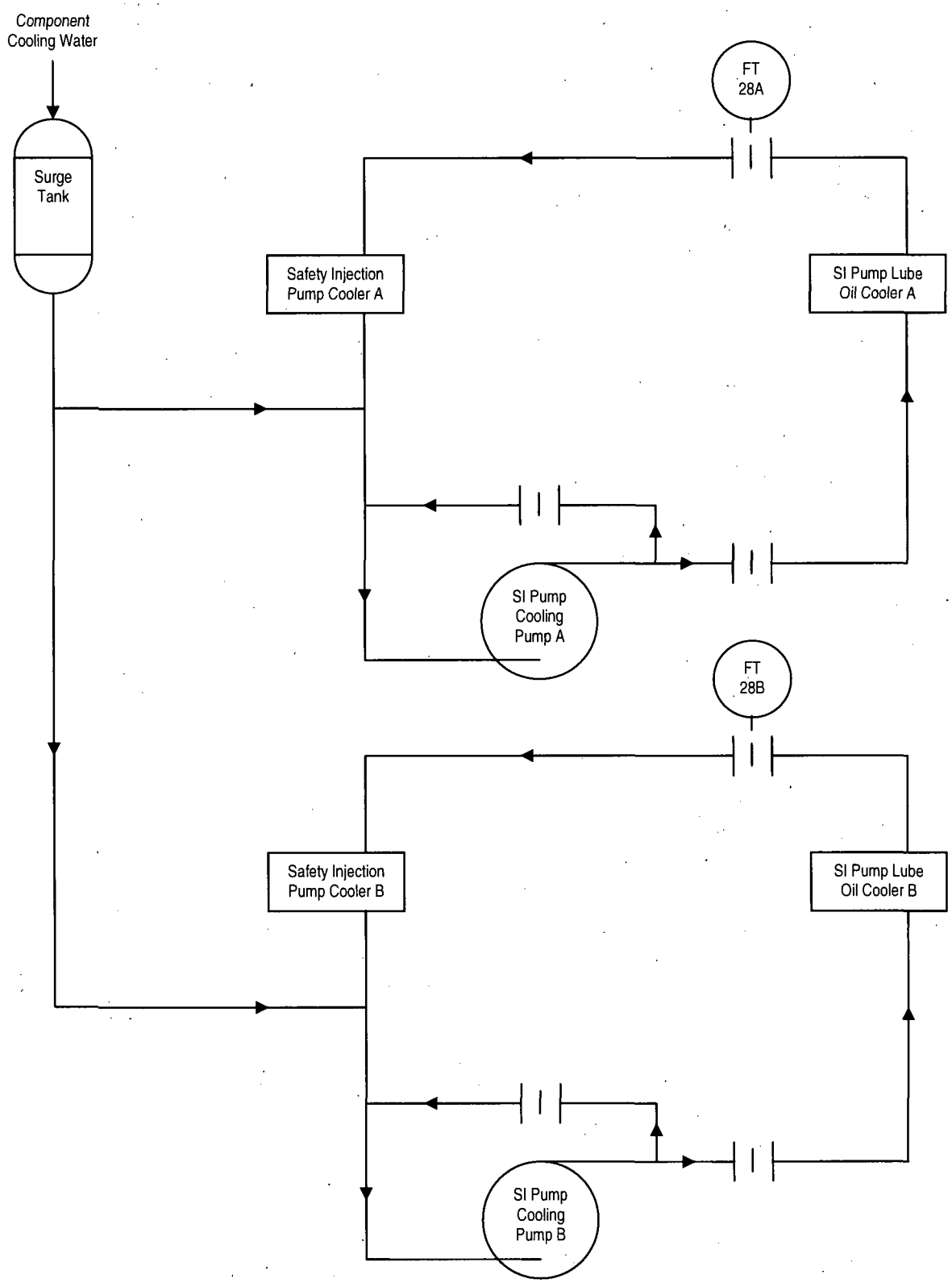
Component
Cooling Water
Surge
Tank
FT
28A
Safety Injection
Pump Cooler A
SI Pump Lube
Oil Cooler A
SI Pump
Cooling
Pump A
FT
28B
Safety Injection
Pump Cooler B
SI Pump Lube
Oil Cooler B
SI Pump
Cooling
Pump B

Figure 2

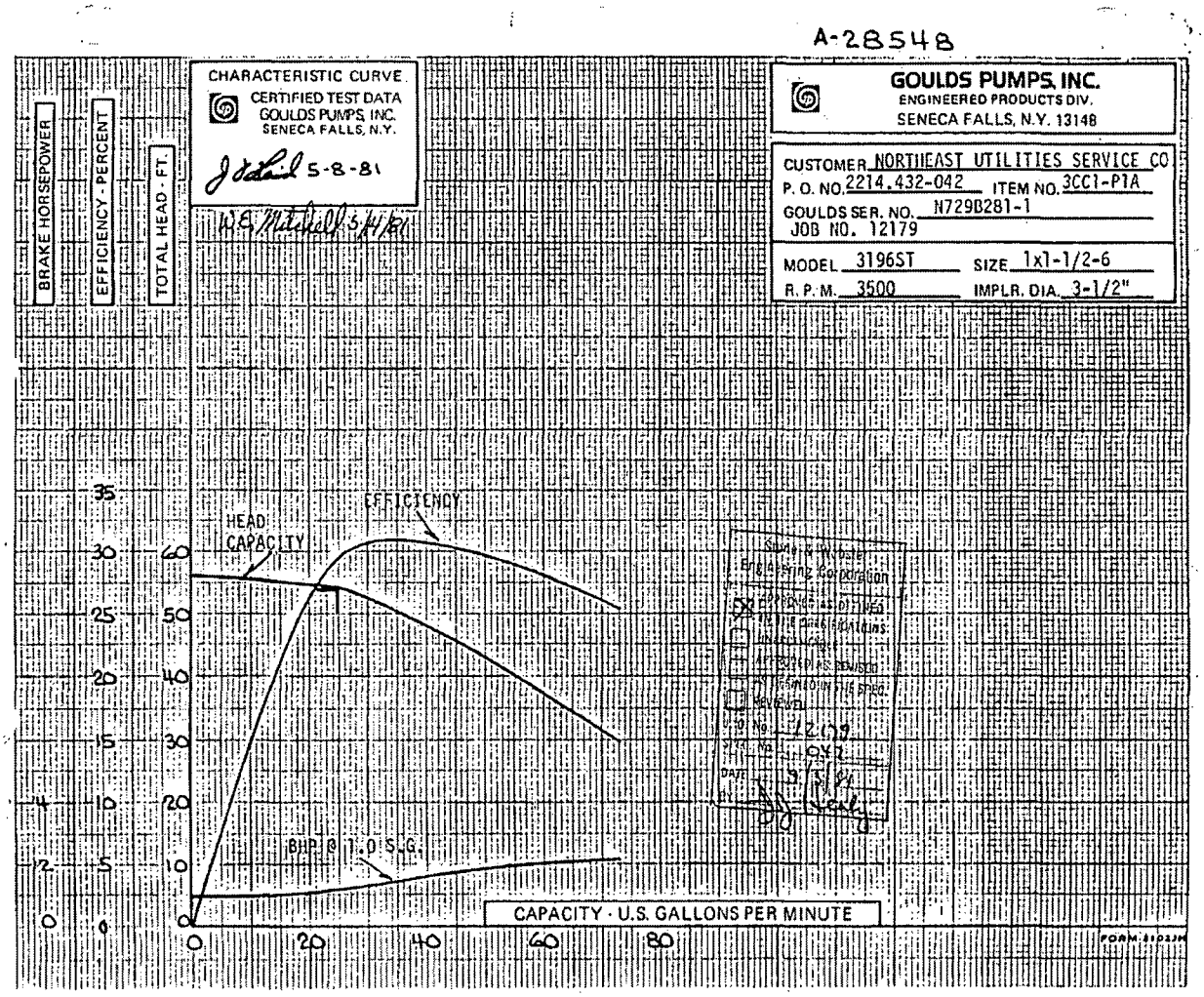
A-28548
CHARACTERISTIC CURVE
CERTIFIED TEST DATA
GOULDS PUMPS, INC.
SENECA FALLS, N.Y.
5-8-81
GOULDS PUMPS, INC.
ENGINEERED PRODUCTS DIV.
SENECA FALLS, N.Y. 13148
CUSTOMER NORTHEAST UTILITIES SERVICE CO
P. O. NO. 2214.432-042 ITEM NO. 3CC1-P1A
GOULDS SER. NO. N729B281-1
JOB NO. 12179
MODEL 3196ST SIZE 1x1-1/2-6
R. P. M. 3500 IMPLR. DIA. 3-1/2"
BRAKE HORSEPOWER
EFFICIENCY - PERCENT
TOTAL HEAD - FT.
HEAD
CAPACITY
EFFICIENCY
BHP @ 1.0 S.G.
CAPACITY - U.S. GALLONS PER MINUTE
0
20
40
60
80
35
30
25
20
15
10
5
0
60
50
40
30
20
10
0

10 CFR 50.55a Request Number P-002

Categorization of the Residual Heat Removal Pumps as Group A/B

Proposed Alternative
In Accordance with 10CFR50.55a(a)(3)(i)

Alternative Provides an Acceptable Level of Quality and Safety

ASME Code Component(s) Affected

3RHS*P1A	Residual Heat Removal (RHR) Pump A
3RHS*P1B	Residual Heat Removal (RHR) Pump B

Applicable Code Edition and Addenda

ASME OM Code 2001 Edition through 2003 Addenda

Applicable Code Requirement(s)

ISTB-1400(b), "identify each pump to be tested in accordance with the rules of this Subsection and categorize it as either a Group A or Group B pump and list the pumps in the plant records (see ISTB-9000). A pump that meets both Group A and Group B definitions shall be categorized as a Group A pump."

Reason for Request

Pursuant to 10 CFR 50.55a, "Codes and Standards", paragraph (a)(3)(i), relief is requested from the requirement of ASME OM Code ISTB-1400(b). This relief will result in testing the RHR pumps as Group B during power operations versus Group A. This proposed relief will result in a lower potential for pump degradation due to pump wear while still being capable of measuring pump performance. The basis of the relief request is that the proposed alternative would provide an acceptable level of quality and safety.

The RHR pumps meet the categorization requirements of Group A pumps in that they are operated routinely during plant shutdowns and refueling outages. However, these pumps also meet the requirements of Group B, in that during normal operation (reactor critical) they are not operated except for testing.

These pumps are centrifugal type pumps required for low head safety injection and to provide reactor core cooling during the cooldown phase of shutdown cooling. During normal power operations, the RHR pump is in a standby condition and is considered an essential part of the Emergency Core Cooling System (ECCS). The pump starts automatically upon receipt of a safety injection signal taking suction from the Refueling Water Storage Tank (RWST) during the injection phase of an accident. The pump discharges to the Reactor Coolant System (RCS). ASME ISTB-1400(b) states that if a pump meets both Group A and Group B definitions, it shall

be categorized as a Group A pump. The RHR pumps are currently tested during normal operation, using the minimum flow recirculation loop.

The design accident flow rate of each RHR pump is approximately 4000 gpm. This flow rate can only be achieved during shutdown periods when injection into the RCS at a reduced pressure is possible.

Classifying these pumps as Group B during power operation minimizes the time required to perform quarterly testing. The 2001/2003 ASME Code testing requirements eliminate the two-minute minimum pump run-time for quarterly Group B pump tests. Eliminating the minimum pump run-time requirement and the requirement to record flow and vibration levels is expected to reduce the length of each quarterly pump test and the accompanying unavailability time for these pumps. Since these pumps are not operated routinely during plant operation, except for required surveillance testing, there is no time or wear related degradation mechanism that would warrant performing more detailed quarterly tests on the RHR pumps.

NUREG/CP-0137, Vol. 1, Proceedings of the Third NRC/American Society of Mechanical Engineers (ASME) Symposium on Valve and Pump Testing, includes a paper entitled, "Description of Comprehensive Pump Test Change to ASME Code, Subsection ISTB." This paper details the philosophy of classifying pumps as Group A or Group B. According to the author, the intent of having different test requirements for different pump groups is to relate the requirements for the amount and degree of quarterly performance monitoring to the amount of degradation expected based on pump operation.

Testing the RHR pumps quarterly as Group A pumps during power operation is contrary to the philosophy of the referenced paper. Quarterly Group A testing subjects these pumps to increased test requirements and performance monitoring. Also, this testing introduces the potential for more degradation due to pump wear (caused by low-flow operation) at the time when they are standby pumps and would not otherwise be subject to operation-induced degradation. Group A testing during power operation may be more detrimental to the long-term health of these components than Group B testing.

Proposed Alternative and Basis for Use

Millstone proposes that the RHR pumps (3RHS*P1A and 3RHS*P1B) be tested as standby pumps (Group B) during power operation and as continuously operating pumps (Group A) during refueling operations. During refueling operations, the Comprehensive pump test may be substituted for a quarterly Group A test that comes due. Millstone further proposes that any time a Comprehensive pump test is performed, the code-required quarterly low-flow test (Group B) requirement may be deleted for that quarter.

Using the provisions of this relief request as an alternative to the specific requirements of ISTB-1400(b) identified above will provide adequate indication of pump performance and continue to provide an acceptable level of quality and safety. Therefore, pursuant to 10 CFR 50.55a(a)(3)(i) relief is requested from the specific ISTB requirements identified in this request.

This alternative provides an acceptable level of quality and safety.

Duration of Proposed Alternative

This proposed alternative will be utilized for the third 10-year interval.

Precedents

Similar relief requests were previously approved;

PR-12 was previously approved for Calvert Cliffs Nuclear Power Plant on May 16, 2002 (TAC Nos. MB3782 and MB3783)

PR-04 was previously approved for Three Mile Island on July 7, 2005 (TAC No.MC2558)

10 CFR 50.55a Request Number P-003

Use of Code Case OMN-6 for Digital Instruments

Proposed Alternative
In Accordance with 10CFR50.55a(a)(3)(i)

Alternative Provides an Acceptable Level of Quality and Safety

ASME Code Component(s) Affected

Various digital instruments used for IST of pumps

Applicable Code Edition and Addenda

ASME OM Code 2001 Edition through 2003 Addenda

Applicable Code Requirement(s)

ISTB-3510(b)(2), "digital instruments shall be selected such that the reference value does not exceed 70% of the calibrated range of the instrument."

Reason for Request

Pursuant to 10 CFR 50.55a, "Codes and Standards", paragraph (a)(3)(i), relief is requested from the requirement of ASME OM Code ISTB-3510(b)(2). This request is to allow the use of ASME Code Case OMN-6, Alternate Rules for Digital Instruments.

Code Case OMN-6 allows the use of digital instruments where the reference value does not exceed 90% of the calibrated range of the instrument. Code Case OMN-6 applies to the 1990 Edition through the 1997 Addenda. Millstone will implement the 2001 Edition through 2003 Addenda of the ASME OM Code for it's third 10-year interval.

Proposed Alternative and Basis for Use

By using Code Case OMN-6, greater flexibility in the selection of instruments would be achieved, thus preventing the installation of multiple instruments to monitor the same parameter during testing. Digital instruments will be selected such that the reference value does not exceed 90 percent of the calibrated range of the instrument.

NUREG-1482, Revision 1, Section 5.5 states that....."The NRC has accepted Code Case OMN-6 as specified in Reg Guide 1.192, which allows each digital instrument to be such that the reference values do not exceed 90 percent of the calibrated range of the instrument."

Use of Code Case OMN-6, approved by the NRC in Reg Guide 1.192, will provide at least equivalent instrumentation accuracy requirements for the required pump testing parameters to be measured in the IST program and will provide results consistent with code requirements. This will provide adequate assurance of acceptable pump performance.

Using the provisions of this relief request as an alternative to the specific requirements of ISTB-3510(b)(2) identified above will provide adequate indication of pump performance and continue to provide an acceptable level of quality and safety. Therefore, pursuant to 10 CFR 50.55a(a)(3)(i) relief is requested from the specific ISTB requirements identified in this request.

This alternative provides an acceptable level of quality and safety.

Duration of Proposed Alternative

This proposed alternative will be utilized for the third 10-year interval.

Precedents

Similar relief requests were previously approved;

P-RR-3 was previously approved for Diablo Canyon Power Plant on January 30, 2006 (TAC Nos. MC6632 and MC6633)

RP07 was previously approved for Columbia Generating Station on March 23, 2007 (TAC Nos.MD3537, MD3538, MD3539, MD3541, MD3542, MD3550, MD3551 and MD3552)

10 CFR 50.55a Request Number P-004

Use of Code Case OMN-9 for Use of Pump Curves

Proposed Alternative
In Accordance with 10CFR50.55a(a)(3)(i)

Alternative Provides an Acceptable Level of Quality and Safety

ASME Code Component(s) Affected

3CCP*P1A	Reactor Building Closed Cooling Water (CCP) Pump A
3CCP*P1B	Reactor Building Closed Cooling Water (CCP) Pump B
3CCP*P1C	Reactor Building Closed Cooling Water (CCP) Pump C

Applicable Code Edition and Addenda

ASME OM Code 2001 Edition through 2003 Addenda

Applicable Code Requirement(s)

ISTB-5121 requires that "Group A tests shall be conducted with the pump operating at a specified reference point."

Reason for Request

Pursuant to 10 CFR 50.55a, "Codes and Standards", paragraph (a)(3)(i), relief is requested from the requirements of ASME OM Code ISTB-5121. Specifically this request is to allow the use of ASME Code Case OMN-9, Use of a Pump Curve for Testing.

Code Case OMN-9 allows the use of a pump curve for testing versus operation of the pump at a specified reference point. Code Case OMN-9 applies to the 1990 Edition through the 1992 Addenda. Millstone will implement the 2001 Edition through 2003 Addenda of the ASME OM Code for it's third 10-year interval.

Proposed Alternative and Basis for Use

The CCP pumps provide cooling flow for heat removal capabilities for the Nuclear Steam Supply System (NSSS) supplied equipment and Balance of Plant (BOP) equipment.

Two CCP pumps are required to be operable in Modes 1 through 4. Testing of the third pump requires manipulation of two trains of CCP to balance flow rates and reduces the chance of lifting a pressure relief valve.

Performance of a Group A test while in normal plant configuration will eliminate the need to start the third pump and balance flows between trains.

The CCP pumps will be tested in a range of flows, and the results will be compared to acceptance criteria based on a portion of the pump curve and the hydraulic acceptance criteria given in ISTB. The guidelines set forth in Code Case OMN-9, "Use of a Pump Curve for Testing" will be followed. In accordance with the RG 1.192, the following elements will be incorporated into the IST test procedures and curve(s) development:

Curves are developed, or manufacturer's pump curves are validated, when the pumps are known to be operating acceptably.

The reference points used to develop or validate the curves are measured using instruments at least as accurate as required by the code.

Curves are based on an adequate number of data points, with a minimum of three.

Points are beyond the "flat" portion (low rates of the curve in a range which includes or is as close as practicable to design basis flow rates.)

Acceptance criteria based on the curves does not conflict with technical specifications or facility safety analysis report operability criteria for flow rate and differential pressure for the affected pumps.

If vibration levels vary significantly over the range of pump conditions, a method for assigning appropriate vibration acceptance criteria should be developed for regions of the pump curve.

When the reference curve may have been affected by repair, replacement, or routine service, a new reference curve shall be determined or the previous curve revalidated by IST.

Using the provisions of this relief request as an alternative to the specific requirements of ISTB-5121 identified above will provide adequate indication of pump performance and continue to provide an acceptable level of quality and safety. Therefore, pursuant to 10 CFR 50.55a(a)(3)(i) relief is requested from the specific ISTB Code requirements identified in this relief request.

Duration of Proposed Alternative

This proposed alternative will be utilized for the third 10-year interval.

Precedents

This relief request was approved by the NRC in their safety evaluation entitled "Surry Power Station, Units 1 and 2 – American Society of Mechanical Engineers IST Program (TAC NOS. MC0120 Through MC0146)" dated July 2, 2004.

ATTACHMENT 4

MILLSTONE POWER STATION, UNIT 3
THIRD INSERVICE TESTING (IST) INTERVAL
VALVE RELIEF REQUEST

DOMINION NUCLEAR CONNECTICUT, INC.
MILLSTONE POWER STATION UNIT 3

Millstone Power Station, Unit 3

Third IST Interval

Valve Relief Request

Relief Request No.	Description	NRC Approval Date
V-001	Containment Recirc Cooler Isolation Valves Exercise Frequency	

10 CFR 50.55a Request Number V-001

Proposed Alternative
In Accordance with 10 CFR 50.55a(a)(3)(i)

Alternative Provides Acceptable Level of Quality and Safety

ASME Code Component(s) Affected

Valve Number	Class	Category	Function
3SWP*MOV54A	3	B	Service Water to Containment Recirc Cooler Isolation Valve
3SWP*MOV54B	3	B	Service Water to Containment Recirc Cooler Isolation Valve
3SWP*MOV54C	3	B	Service Water to Containment Recirc Cooler Isolation Valve
3SWP*MOV54D	3	B	Service Water to Containment Recirc Cooler Isolation Valve

Applicable Code Edition and Addenda

ASME OM Code 2001 Edition through 2003 Addenda

Applicable Code Requirement

ISTC-3510 Exercising Test Frequency. Active Category A, Category B, and Category C check valves shall be exercised nominally every three months, except as provided by ISTC-3520, ISTC-3540, ISTC-3550, ISTC-3560, ISTC-5221, and ISTC-5222.

Reason for Request

Pursuant to 10 CFR 50.55a, "Codes and Standards", paragraph (a)(3)(i), relief is requested from the requirement of ASME OM Code ISTC-3510, Exercising Test Frequency. ISTC-3510 requires exercise testing to be performed on a quarterly frequency, or at cold shutdown or refueling as allowed by ISTC-3521.

The basis of the relief request is that the proposed alternative would provide an acceptable level of quality and safety.

Proposed Alternative and Basis for Use

Due to the complexity of exercising these valves, it is proposed that the testing frequency be once every six months with a 25% grace period to allow for scheduling flexibility.

Testing the valves quarterly imposes undue burden on plant equipment availability, while the alternate frequencies listed in ISTC-3521 may be excessive.

Testing the valves is a complex evolution requiring an interlock associated with 3SWP*MOV50A/B to be defeated (temporary modification). This action allows opening the 3SWP*MOV54s without a Containment Depressurization Actuation (CDA) signal present. Entry into Limiting Condition for Operation (LCO) 3.7.4 during Modes 1 through 4 is required for the duration the temporary modification is installed to defeat the interlock. This makes one train of Containment Recirculation Spray (RSS) and Service Water System (SWP) inoperable. When the valves are opened, service water is introduced into the RSS heat exchangers, which is then required to be drained, the heat exchanger flushed with demineralized water, and then drained again. This process takes approximately 8-10 hours per heat exchanger. This results in accruing a significant amount of Maintenance Rule unavailability on RSS, and additional time on SWP.

The valves were originally scheduled for IST each cold shutdown (Modes 5 and 6). During cold shutdown, the LCO is not applicable however defeating the interlock in Modes 1 through 4 every six months to allow RSS heat exchanger flushing was evaluated and determined acceptable from a plant risk perspective. The flushing evolution provides the ideal opportunity to perform the stroke time and position indication tests without additional plant risk.

Millstone committed to perform these flushes (LER 95-011-00, Letter MP-95-186) at specific times throughout the year to minimize the vulnerability from plantigrade attachment. The flushes are scheduled to minimize the potential for large mussel colony infestation of upstream piping and subsequent heat exchanger fouling. Ideally, the flushes would be performed in late spring and early fall. This testing however, is less frequent than the code-specified quarterly testing. The ASME OM Code does not identify any other frequency during power operation only deferrals to cold shutdown or refueling are permitted.

Duration of Proposed Alternative

This proposed alternative will be utilized for the third 10-year interval.

Precedents

This relief request was previously approved for a similar request in the second 10-year interval at MPS2 as V-004, dated February 2, 2001 (TAC No. MA9336).

ATTACHMENT 5

MILLSTONE POWER STATION, UNIT 2
INSERVICE TESTING (IST) PROGRAM PLAN FOR PUMPS AND VALVES
FOURTH IST INTERVAL
DECEMBER 2, 2008 – DECEMBER 1, 2018
REVISION 0

DOMINION NUCLEAR CONNECTICUT, INC.
MILLSTONE POWER STATION UNIT 2

Millstone Power Station Unit 2

Inservice Testing Program
Fourth 10-Year Interval

Revision 0

Commercial Service Date:

December 26, 1975

Dominion Nuclear Connecticut, Inc.
Millstone Power Station Unit 2
Rope Ferry Road
Waterford, CT 06385

APPROVALS:

Prepared By: _____ Date: _____
IST Coordinator

Approved By: _____ Date: _____
Supervisor Components

Approved By: _____ Date: _____
Engineering Manager – Systems and Components

TABLE OF CONTENTS

SECTION

1.0 INTRODUCTION

- **1.1** Purpose
- **1.2** Scope

2.0 INSERVICE TESTING PLAN FOR PUMPS

- **2.1** Pump Inservice Testing Plan Description
- **2.2** Pump Plan Table Description

3.0 INSERVICE TESTING PLAN FOR VALVES

- **3.1** Valve Inservice Testing Plan Description
- **3.2** Valve Plan Table Description

4.0 ATTACHMENTS

- **4.1** System and P&ID Listing
- **4.2** Pump Relief Request Index
- **4.3** Pump Relief Requests
- **4.4** Valve Relief Request Index
- **4.5** Valve Relief Requests
- **4.6** Alternate Test Justification Index
- **4.7** Alternate Test Justifications
- **4.8** Station Technical Position Index
- **4.9** Station Technical Positions
- **4.10** Inservice Testing Pump Table
- **4.11** Inservice Testing Valve Table

1.0 INTRODUCTION

1.1 Purpose

To provide requirements for the performance and administration of assessing the operational readiness of those pumps and valves whose specific functions are required to:

- Shutdown the reactor to the safe shutdown condition
- Maintain the reactor in the safe shutdown condition
- Mitigate the consequences of an accident

1.2 Scope

The program plan was prepared to meet the requirements of the following subsections of the American Society of Mechanical Engineers (ASME) OM Code (2001 Edition through 2003 Addenda).

- Subsection ISTA, "*General Requirements*"

  ISTA contains the requirements directly applicable to IST including the Owner's Responsibility and Records Requirements.

- Subsection ISTB, "*Inservice Testing of Pumps in Light-Water Reactor Nuclear Power Plants*"

  ISTB establishes the requirements for IST of pumps in light-water reactor nuclear power plants. The pumps covered, are those provided with an emergency power source that are required in shutting down a reactor to the safe shutdown condition, in maintaining the safe shutdown condition, or in mitigating the consequences of an accident. These pumps are either centrifugal or positive displacement type pumps.

- Subsection ISTC, *"Inservice Testing of Valves in Light-Water Reactor Nuclear Power Plants"*

  ISTC establishes the requirements for IST testing of valves in light-water reactor nuclear power plants. The valves covered include those which provide overpressure protection and are required to perform a specific function, either actively by changing valve obturator position or passively by effectively maintaining required obturator position in shutting down a reactor to the safe shutdown condition, in maintaining the safe shutdown condition, or in mitigating the consequences of an accident.

- Mandatory Appendix I, *"Inservice Testing of Pressure Relief Devices in Light-Water Reactor Nuclear Power Plants"*

  Mandatory Appendix I provides the requirements for performance testing and monitoring of nuclear plant pressure relief devices. Methods, intervals, and record requirements for monitoring and testing are established, as well as guidelines for the evaluation of results. This appendix applies to safety valves, safety relief valves, pilot-operated pressure relief valves, power-actuated pressure relief valves, non-reclosing pressure relief devices and vacuum relief devices, including all accessories and appurtenances.

- Mandatory Appendix II, *"Check Valve Condition Monitoring Program"*

  Mandatory Appendix II provides an alternative to the testing or examination requirements of ISTC-3510, ISTC-3520, ISTC-3550, and ISTC-5221. The purpose of this program is both to improve valve performance and to optimize testing, examination, and preventive maintenance activities in order to maintain the continued acceptable performance of a select group of check valves.

The Millstone Power Station Unit 2 (MPS2) fourth 10-year interval pump and valve IST plan will be in effect as follows:

Begin	**End**
Dec. 2, 2008	Dec. 1, 2018

This plan will be updated as required in accordance with 10CFR50.55a(f).

This program plan provides a complete listing of those pumps and valves included in the program per the requirements of:

- ISTA *"General Requirements ,"*
- ISTB *"Inservice Testing of Pumps in Light-Water Reactor Nuclear Power Plants"*
- ISTC *"Inservice Testing of Valves in Light-Water Reactor Nuclear Power Plants"*
- Mandatory Appendix I, *"Inservice Testing of Pressure Relief Devices in Light-Water Reactor Nuclear Power Plants"*
- Mandatory Appendix II, *"Check Valve Condition Monitoring Program"*

The key features of this plan are: the Pump and Valve Table listings, Relief Requests, Alternative Test Justifications, and Technical Positions. The MPS2 IST Basis Document includes the justification for inclusion of components in the scope of IST and also the justifications for exclusion from the program. Administrative procedures, surveillance testing procedures, and other records required to define and execute the IST program are all retained and available at MPS2.

2.0 INSERVICE TESTING PLAN FOR PUMPS

2.1 Pump Inservice Testing Plan Description

This program plan meets the requirements of ASME OM Code ISTB with the exception of specific relief requests contained in Attachment 4.3.

2.2 Pump Plan Table Description

The pumps included in the MPS2 IST Plan are listed in Attachment 4.10. The information contained in these tables identifies those pumps to be tested to the requirements of the ASME OM Code, the testing parameters and frequencies, and associated relief requests. The headings for the pump tables are delineated below.

Pump Name	Descriptive name of the pump.	
Pump Tag	Unique pump identification number.	
P&ID	Piping and Instrumentation Drawing (Flow Diagram) on which the pump is represented.	
P&ID Coor.	The P&ID Coordinate location of the pump.	
Safety Class	ASME Code classification of the pump.	
	1	Class 1
	2	Class 2
	3	Class 3
Pump Type	Pump type.	
	C	Centrifugal
	V	Vertical
	PD	Positive Displacement
Pump Driver	Pump driver type.	
	Motor	Motor driven
	Turbine	Steam turbine driven
	Engine	Engine Driven
Category	Pump category as defined in ISTB-2000.	
	A	Continuous or routinely operated pumps
	B	Standby pumps not operated routinely except for testing

Pump Plan Table Description (Cont'd)

Test Type	Measured pump test parameters. DP — Differential Pressure N — Speed Q — Flow Rate V — Vibration a - Denotes a Category A Pump Test b - Denotes a Category B Pump Test c - Denotes a Comprehensive Pump Test
Test Freq.	Frequency for performing the specified IST. Q — Quarterly (92 Days) 2A — Biennially (Two Years)
Relief Request	A relief request number is listed when a specific code requirement is determined to be impracticable. Attachment 4.2 contains an index of all the relief requests included in Attachment 4.3.
Tech. Position	A technical position number is listed when the requirements of the code are not easily interpreted and clarifying information is needed. The technical position is used to document how code requirements are being implemented at the station. Technical positions are prefixed with "TP". Attachment 4.8 contains an index of all the Station Technical Positions included in Attachment 4.9.

3.0 INSERVICE TESTING PLAN FOR VALVES

3.1 Valve Inservice Testing Plan Description

This plan establishes the test intervals and parameters to be measured to meet the requirements of ISTA, ISTC, Appendix I, and Appendix II with the exception of the specific relief requests contained in Attachment 4.5.

Where the frequency requirements for valve testing have been determined to be impracticable, Alternate Test Justifications have been identified and written. These justifications are provided in Attachment 4.7.

3.2 Valve Plan Table Description

The valves included in the MPS2 IST Plan are listed in Attachment 4.11. The information contained in these tables identify those valves that are required to be tested to the requirements of ISTC and Appendix I, the test parameters, frequency of testing, and the associated relief requests. The headings for the valve tables are delineated below.

Valve Name — Descriptive name of the valve.

Valve Tag — A unique identifier for the valve.

P&ID — Piping and Instrumentation Drawing (Flow Diagram) on which the valve is represented.

P&ID Coor. — The P&ID Coordinate location of the valve.

Safety Class — The ASME Class abbreviation.

1	Class 1
2	Class 2
3	Class 3
4	Non-Code Class

Cat. — The ASME OM Code category (or categories) as defined in ISTC-1300.

A	Seat Leakage Limited.
B	Seat Leakage Not Required.
C	Self-Actuating Valves.
D	Single Use Valves.
AC	Both Categories A and C.
BC	Both Categories B and C.
N/A	Not Applicable

Size — The nominal pipe size of the valve, in inches.

Valve Plan Table Description (Cont'd)

Valve Type — The valve body style abbreviation.

AN	Angle
BF	Butterfly
BL	Ball
CD	Duo-Check
CH	Check (Unknown Type)
CL	Lift Check
CN	Nozzle Check
CS	Swing Check
CT	Tilted Disc Check
DI	Diaphragm
GL	Globe
GL-3W	Three Way Globe
GT	Gate
NE	Needle
PL	Plug
RV	Relief
SC	Stop Check
SV	Safety

Act. Type — The valve actuator type abbreviation.

AO	Air Operated
FA	Flow Actuated
HA	Manually Operated
HO	Hydraulic Operated
MO	Motor Operated
SA	Self Actuated
SO	Solenoid Operated

Active/Passive — Active or Passive function determination for the valve in accordance with ISTC-2000.

A	Active
N/A	Not Applicable
P	Passive

Valve Plan Table Description (Cont'd)

Normal Position

The normal position abbreviation. This refers to the valve's position during normal power operation. If the system does not operate during power operation, then the normal position is the position of the valve when the system is not operating.

C	Closed
LC	Locked Closed
LO	Locked Open
LT	Locked Throttled
O	Open
O/C	Open or Closed
SYS	System Condition Dependent

Safety Position

The safety function position(s). For valves that perform safety functions in the open and closed positions more than one safety function position may be specified.

C	Closed
N/A	Not Applicable
O	Open
O/C	Open and Closed

Test Type

The test type abbreviation.

DIS	Disassemble, Inspect, Stroke Test one valve each refueling
FS	Full Stroke (Open and Closed)
FSC	Full Stroke Closed
FSO	Full Stroke Open
FT	Fail Test
LJ	Leak Rate Test - 10CFR50 App. J
LT	Leak Test
NO	Verify Function During Normal Operation
NR	No Test Required
PI	Remote Position Indicator
RT	Radiograph for valve closure verification
SRV	Pressure Relief Device Test
STC	Stroke Time Closed
STO	Stroke Time Open

Valve Plan Table Description (Cont'd)

Test Freq. — The required test frequency abbreviation.

2A	2-Years
5A	5-Years
10A	10-Years
6M	6-Months
A/R	As Required
CM	Condition Monitoring
CS	Cold Shutdown
CS/BI	Cold Shutdown, not to exceed two years
J	Appendix J
NO	Normal Operation
Q	Quarterly
R	Refueling Outage

Alt. Freq. — The alternate test frequency justified by the valve's associated Alternate Test Justification, where applicable.

Relief Request — A relief request number is listed when a specific code requirement is determined to be impracticable. Attachment 4.4 contains an index of all the valve relief requests included in Attachment 4.5.

Alt. Test Just. — This lists the applicable Alternate Test Justification. This section refers to Cold Shutdown Justifications, Refueling Outage Justifications, and justifications for any other test frequencies that differ from the ASME OM Code required testing frequency. Attachment 4.6 contains an index of all the Alternate Test Justifications included in Attachment 4.7.

Tech. Position — A technical position number is listed when the requirements of the code are not easily interpreted and clarifying information is needed. The technical position is used to document how code requirements are being implemented at the station. Technical positions are prefixed with "TP". Attachment 4.8 contains an index of all the Station Technical Positions included in Attachment 4.9.

4.0 ATTACHMENTS:

Attachment 4.1
System and P&ID Listing

Attachment 4.2
Pump Relief Request Index

Attachment 4.3
Pump Relief Requests

Attachment 4.4
Valve Relief Request Index

Attachment 4.5
Valve Relief Requests

Attachment 4.6
Alternate Test Justification Index

Attachment 4.7
Alternate Test Justifications

Attachment 4.8
Station Technical Position Index

Attachment 4.9
Station Technical Positions

Attachment 4.10
Inservice Testing Pump Table

Attachment 4.11
Inservice Testing Valve Table

ATTACHMENT 4.1

SYSTEM AND P&ID LISTING

System Number	System Abbreviation	System Description	P&ID
2301	RCS	REACTOR COOLANT & VESSEL	26014-1
2301	RCS	REACTOR COOLANT & VESSEL	26014-2
2304A	CVC	CHARGING (VOLUME CONTROL)	26017-1
2304B	PUR	CHARGING (LETDOWN)	26017-2
2304C	BAS	BORIC ACID	26017-3
2304A	CVC	CHARGING (VOLUME CONTROL)	26031-1
2305	SFC	SPENT FUEL POOL COOLING & PURIFICATION	26023-1
2305	SFC	SPENT FUEL POOL COOLING & PURIFICATION	26023-2
2306	SIT	SAFETY INJECTION TANKS	26015-3
2307	LPI	LOW PRESSURE SAFETY INJECTION	26015-1
2307	LPI	LOW PRESSURE SAFETY INJECTION	26015-2
2308	HPI	HIGH PRESSURE SAFETY INJECTION	26015-1
2308	HPI	HIGH PRESSURE SAFETY INJECTION	26015-2
2308	HPI	HIGH PRESSURE SAFETY INJECTION	26015-3
2309	CSS	CONTAINMENT SPRAY	26015-1
2309	CSS	CONTAINMENT SPRAY	26015-2
2309	CSS	CONTAINMENT SPRAY	26015-3
2310	SCC	SHUTDOWN COOLING	26015-1
2310	SCC	SHUTDOWN COOLING	26015-3
2314B	CEB	CTMT & ENCLOSURE BUILDING PURGE	26028-1
2314B	CEB	CTMT & ENCLOSURE BUILDING PURGE	26028-2
2316	MNS	MAIN STEAM	26002-1
2316	MNS	MAIN STEAM	26002-2
2322	AFW	AUXILIARY FEEDWATER	26005-2
2322	AFW	AUXILIARY FEEDWATER	26005-3
2322	AFW	AUXILIARY FEEDWATER	26011-1
2326A	SWS	SERVICE WATER	26008-2
2326A	SWS	SERVICE WATER	26008-3
2330A	CCR	REACTOR BUILDING CLOSED COOLING WATER	26022-1
2330A	CCR	REACTOR BUILDING CLOSED COOLING WATER	26022-2
2330A	CCR	REACTOR BUILDING CLOSED COOLING WATER	26022-3

System Number	System Abbreviation	System Description	P&ID
2330A	CCR	REACTOR BUILDING CLOSED COOLING WATER	26022-4
2330A	CCR	REACTOR BUILDING CLOSED COOLING WATER	26022-5
2330A	CCR	REACTOR BUILDING CLOSED COOLING WATER	26022-6
2330C	CWD	CHILLED WATER	26027-2
2346A	DGN	DIESEL GENERATOR	26018-5
2350	RSS	REFUELING WATER STORAGE TANK	26015-2
2360	XXX	CONTAINMENT ISOLATION VALVES	26009-10
2360	XXX	CONTAINMENT ISOLATION VALVES	26020-5
2360	XXX	CONTAINMENT ISOLATION VALVES	26021-2
2360	XXX	CONTAINMENT ISOLATION VALVES	26024-1
2360	XXX	CONTAINMENT ISOLATION VALVES	26024-2
2360	XXX	CONTAINMENT ISOLATION VALVES	26028-3
2361	XXX	INSTRUMENT AIR ACCUMULATOR CHECK VALVES	26009-5
2361	XXX	INSTRUMENT AIR ACCUMULATOR CHECK VALVES	26009-6
2361	XXX	INSTRUMENT AIR ACCUMULATOR CHECK VALVES	26009-8

ATTACHMENT 4.2

PUMP RELIEF REQUEST INDEX

Relief Request No.	Description	NRC Approval Date
P-001	Categorization of LPSI Pumps as Group A/B	
P-002	Use of Code Case OMN-6 for Digital Instruments	

ATTACHMENT 4.3

PUMP RELIEF REQUESTS

10 CFR 50.55a Request Number P-001

Categorization of the LPSI Pumps as Group A/B

Proposed Alternative
In Accordance with 10CFR50.55a(a)(3)(i)

Alternative Provides an Acceptable Level of Quality and Safety

ASME Code Component(s) Affected

P-42A	Low Pressure Safety Injection (LPSI) Pump A
P-42B	Low Pressure Safety Injection (LPSI) Pump B

Applicable Code Edition and Addenda

ASME OM Code 2001 Edition through 2003 Addenda

Applicable Code Requirement(s)

ISTB-1400(b), "identify each pump to be tested in accordance with the rules of this subsection and categorize it as either a Group A or Group B pump and list the pumps in the plant records (see ISTB-9000). A pump that meets both group A and group B definitions shall be categorized as a Group A pump."

Reason for Request

Pursuant to 10 CFR 50.55a, "Codes and Standards", paragraph (a)(3)(i), relief is requested from the requirement of ASME OM Code ISTB-1400(b). This relief will result in testing the LPSI pumps as Group B during power operations versus Group A. This proposed relief will result in a lower potential for pump degradation due to pump wear while still being capable of measuring pump performance. The basis of the relief request is that the proposed alternative would provide an acceptable level of quality and safety.

The LPSI pumps meet the categorization requirements of Group A pumps in that they are operated routinely during plant shutdowns and refueling outages. However, these pumps also meet the requirements of Group B, in that during normal operation (reactor critical) they are not operated except for testing.

These pumps are centrifugal type pumps required for low head safety injection and to provide reactor core cooling during the cooldown phase of shutdown cooling. During normal power operations, the LPSI pump is in a standby condition and is considered an essential part of the Emergency Core Cooling System (ECCS). The pump starts automatically upon receipt of a safety injection signal taking suction from the Refueling Water Storage Tank (RWST) during the injection phase of an accident. The pump discharges to the reactor coolant system (RCS).

ASME ISTB-1400(b) states that if a pump meets both Group A and Group B definitions, it shall be categorized as a Group A pump. The LPSI pumps are currently tested during normal operation, using the minimum flow recirculation loop.

10 CFR 50.55a Request Number P-001

The design flow rate of each LPSI pump is 3000 gpm. This flow rate can only be achieved during shutdown periods when injection into the RCS at a reduced pressure is possible.

Classifying these pumps as Group B during power operation minimizes the time required to perform quarterly testing. The 2001/2003 ASME Code testing requirements eliminate the 2-minute minimum pump run-time for quarterly Group B pump tests. Eliminating the minimum pump run-time requirement and the requirement to record flow and vibration levels is expected to reduce the length of each quarterly pump test and the accompanying unavailability time for these pumps. Since these pumps are not operated routinely during plant operation, except for required surveillance testing, there is no time or wear related degradation mechanism that would warrant performing more detailed quarterly tests on the LPSI pumps.

NUREG/CP-0137, Vol. 1, Proceedings of the Third NRC/American Society of Mechanical Engineers (ASME) Symposium on Valve and Pump Testing, includes a paper entitled, "Description of Comprehensive Pump Test Change to ASME Code, Subsection ISTB." This paper details the philosophy of classifying pumps as Group A or Group B. According to the author, the intent of having different test requirements for different pump groups is to relate the requirements for the amount and degree of quarterly performance monitoring to the amount of degradation expected based on pump operation.

Testing the LPSI pumps quarterly as Group A pumps during power operation is contrary to the philosophy of the referenced paper. Quarterly Group A testing subjects these pumps to increased test requirements and performance monitoring. Also, this testing introduces the potential for more degradation due to pump wear (caused by low-flow operation) at the time when they are standby pumps and would not otherwise be subject to operation-induced degradation. Group A testing during power operation may be more detrimental to the long-term health of these components than Group B testing.

Proposed Alternative and Basis for Use

Millstone proposes that the LPSI pumps (P-42A and P-42B) be tested as standby pumps (Group B) during power operation and as continuously operating pumps (Group A) during refueling operations. During refueling operations, the Comprehensive pump test may be substituted for a quarterly Group A test that comes due. Millstone further proposes that any time a Comprehensive pump test is performed; the code-required quarterly low-flow test (Group B) requirement may be deleted for that quarter.

Using the provisions of this relief request as an alternative to the specific requirements of ISTB-1400(b) identified above will provide adequate indication of pump performance and continue to provide an acceptable level of quality and safety. Therefore, pursuant to 10 CFR 50.55a(a)(3)(i) relief is requested from the specific ISTB requirements identified in this request.

This alternative provides an acceptable level of quality and safety.

10 CFR 50.55a Request Number P-001

Duration of Proposed Alternative

This proposed alternative will be utilized for the fourth 10-year interval.

Precedents

Similar relief requests were previously approved;

PR-12 was previously approved for Calvert Cliffs Nuclear Power Plant on May 16, 2002 (TAC Nos. MB3782 and MB3783)

PR-04 was previously approved for Three Mile Island on July 7, 2005 (TAC No.MC2558)

10 CFR 50.55a Request Number P-002

Use of Code Case OMN-6 for Digital Instruments

Proposed Alternative
In Accordance with 10CFR50.55a(a)(3)(i)

Alternative Provides an Acceptable Level of Quality and Safety

ASME Code Component(s) Affected

Various digital instruments used for IST of pumps

Applicable Code Edition and Addenda

ASME OM Code 2001 Edition through 2003 Addenda

Applicable Code Requirement(s)

ISTB-3510(b)(2), "digital instruments shall be selected such that the reference value does not exceed 70% of the calibrated range of the instrument."

Reason for Request

Pursuant to 10 CFR 50.55a, "Codes and Standards", paragraph (a)(3)(i), relief is requested from the requirement of ASME OM Code ISTB-3510(b)(2). This request is to allow the use of ASME Code Case OMN-6, Alternate Rules for Digital Instruments.

Code Case OMN-6 allows the use of digital instruments where the reference value does not exceed 90% of the calibrated range of the instrument. Code Case OMN-6 applies to the 1990 Edition through the 1997 Addenda. Millstone will implement the 2001 Edition through 2003 Addenda of the ASME OM Code for it's fourth 10-year Interval.

Proposed Alternative and Basis for Use

By using Code Case OMN-6, greater flexibility in the selection of instruments would be achieved, thus preventing the installation of multiple instruments to monitor the same parameter during testing. Digital instruments will be selected such that the reference value does not exceed 90% of the calibrated range of the instrument.

NUREG-1482, Revision 1, Section 5.5 states that....."The NRC has accepted Code Case OMN-6 as specified in Reg Guide 1.192, which allows each digital instrument to be such that the reference values do not exceed 90 percent of the calibrated range of the instrument."

Use of Code Case OMN-6, approved by the NRC in Reg Guide 1.192, will provide at least equivalent instrumentation accuracy requirements for the required pump testing parameters to be measured in the IST program and will provide results consistent with code requirements. This will provide adequate assurance of acceptable pump performance.

10 CFR 50.55a Request Number P-002

Using the provisions of this relief request as an alternative to the specific requirements of ISTB-3510(b)(2) identified above will provide adequate indication of pump performance and continue to provide an acceptable level of quality and safety. Therefore, pursuant to 10 CFR 50.55a(a)(3)(i) relief is requested from the specific ISTB requirements identified in this request.

This alternative provides an acceptable level of quality and safety.

Duration of Proposed Alternative

This proposed alternative will be utilized for the fourth 10-year interval.

Precedents

Similar relief requests were previously approved;

P-RR-3 was previously approved for Diablo Canyon Power Plant on January 30, 2006 (TAC Nos. MC6632 and MC6633)

RP07 was previously approved for Columbia Generating Station on March 23, 2007 (TAC Nos.MD3537, MD3538, MD3539, MD3541, MD3542, MD3550, MD3551 and MD3552)

ATTACHMENT 4.4

VALVE RELIEF REQUEST INDEX

Relief Request No.	Description	NRC Approval Date
V-001	RWST Back-leakage Valves Leakage Test Frequency	
V-002	Firewater to AFW Pump Suction Header Manual Valve Test Frequency	

ATTACHMENT 4.5

VALVE RELIEF REQUESTS

10 CFR 50.55a Request Number V-001

RWST Back-Leakage Valves Leakage Test Frequency
Proposed Alternative
In Accordance with 10 CFR 50.55a(a)(3)(ii)

Hardship or Unusual Difficulty without a Compensating Increase in Level of Quality or Safety

ASME Code Component(s) Affected

Valve Number	Class	Category	Function
2-CS-14A	2	AC	RWST Outlet Header Check Valve
2-CS-14B	2	AC	RWST Outlet Header Check Valve
2-CS-050	2	A	Cont Spray to Recirc Isolation Valve
2-CS-051	2	A	Cont Spray to Recirc Isolation Valve
2-SI-459	2	A	SIS Test Header Downstream Isolation
2-SI-460	2	A	LPSI /Containment Spray Test Header Stop Valve
2-SI-659	2	A	ESF Pumps Min Flow Recirculation Header Isolation Valve
2-SI-660	2	A	ESF Pumps Min Flow Recirculation Header Isolation Valve

Applicable Code Edition and Addenda

ASME OM Code 2001 Edition through 2003 Addenda

Applicable Code Requirement

ISTC-3630(a) Leakage Rate for Other Than Containment Isolation Valves. Category A valves with a leakage requirement not based on an Owner's 10 CFR 50, Appendix J program, shall be tested to verify their seat leakages within acceptable limits. Valve closure before seat leakage testing shall be by using the valve operator with no additional closing force applied.

(a) Frequency. Tests shall be conducted at least once every two years.

Reason for Request

Pursuant to 10 CFR 50.55a, "Codes and Standards", paragraph (a)(3)(ii), relief is requested from the requirement of ASME OM Code ISTC-3630(a). ISTC-3630(a) requires leakage testing of category A valves, other than containment isolation valves, on a 2-year frequency.

Based on past leakage testing history of these valves, Millstone proposes adoption of the performance based Appendix J, Option B frequencies.

Given the associated hardship, testing of these valves each refueling does not provide a compensating increase in the level of quality or safety for the following reasons:

10 CFR 50.55a Request Number V-001

1. Performance of the seat leakage tests each refueling outage has a significant impact on generation of radwaste, radiation exposure, outage schedule and resources.
2. Testing of 2-SI-460 requires a freeze seal that requires significant planning and coordination to ensure safe working conditions are maintained.
3. The train specific valves 2-CS-14A and 2-CS-14-B are tested by involving a significant amount of system tagging and unavailability of both trains of RWST supply.

Proposed Alternative and Basis for Use

These valves are required to close or remain closed to prevent back-leakage to the RWST during the recirculation phase of a Loss-of-Coolant Accident (LOCA). The subject valves function as a system during the sump recirculation phase of a LOCA to prevent backflow into the RWST, thus, limiting the potential for release of radioactivity from containment to the atmosphere. The RWST is vented to atmosphere. The total allowed leakage limit and thus the assumed release from this system of valves, is based on the calculated site boundary dose limits and control room habitability limits. Individual leak rates of the subject valves can vary as long as the total back-leakage from the valves into the RWST is maintained within the assumed calculation limits.

Administrative leakage limits have been calculated for each of the subject valves. These limits, as well as historical leakage results, are shown in Table 1 (see Page 25 of this attachment). Measured leakages have been well below the administrative limits over the past several tests. This data indicates reasonable assurance that the valves will perform their intended function, and that leakage rates will not exceed the administrative limits from test to test. Therefore, extension of the test frequency is warranted.

Seat leakage testing of these valves requires draining/venting of radioactive fluid and the processing of significant amounts of contaminated water (radwaste) to perform the required test. In addition, radiological exposure (approximately 50 millirem per person) will be accumulated for test personnel. Performance of the seat leakage tests each refueling outage has a significant impact on outage schedule and resources.

Testing of 2-SI-460 requires a freeze seal to be established on the 6-inch header piping. This is necessary to provide a valve test boundary. This task requires significant planning and coordination to ensure safe working conditions are maintained.

The train specific valves 2-CS-14A and 2-CS-14B are tested by involving a significant amount of system tagging and unavailability of both trains of RWST supply. MPS2 refueling outages are scheduled to concentrate work on the out-of-service train, while protecting the in-service train, thus maintaining adequate shutdown risk safety margins. This relief would therefore result in testing being performed on only the out-of-service train, minimizing work on the protected train.

Millstone proposes that the subject valves be exempt from the 2-year leak test frequency requirement of ISTC-3630(a) for Category A valves whose closing function prevents back-leakage to the RWST during post-LOCA sump recirculation and tested as follows:

- 2-CS-14A/B will be tested every other refueling
- The remainder of these valves will be tested every 60 months

10 CFR 50.55a Request Number V-001

- Test frequencies will be doubled upon failure of administrative criteria until two successive acceptable tests are recorded

Performance based frequency of testing implemented by Option B to Appendix J of 10CFR50 is applicable to these valves, whose function is isolation of the extended containment boundary while on sump recirculation.

Duration of Proposed Alternative

This proposed alternative will be utilized for the fourth 10-year interval.

Precedents

This relief request was previously approved for a similar request in third 10-year interval at MPS2 as V-006, dated February 24, 2003 (TAC Nos. MB6482 and MB6483).

Table 1

Leakage Limits/Results

Valve Number	Administrative Limit	1998 Measured Leakage	2000 (2R13) Measured Leakage	2002 (2R14) Measured Leakage	Last Test	Refueling Last Tested
2-CS-14A	7.0 gpm	0.714 gpm	0.600 gpm	0.800 gpm	0.700 gpm	2R17
2-CS-14B	7.0 gpm	0 gpm	0 gpm	0.1 gpm	0	2R16
2-CS-050	0.01 gpm	0.00007 gpm	0.00005 gpm	See note	0.0008 gpm	2R16
2-CS-051	0.01 gpm	0.0001 gpm	0.00012 gpm	See note	0.0002 gpm	2R16
2-SI-459	0.02 gpm	See note	See note	0.0017 gpm	0.0015 gpm	2R17
2-SI-460	0.05 gpm	0 gpm	0.0008 gpm	0 gpm	0 gpm	2R17
2-SI-659	0.12 gpm	0.0016 gpm	0.007 gpm	0.024 gpm	0.0003 gpm	2R17
2-SI-660	0.12 gpm	0.0035 gpm	0.016 gpm	0.027 gpm	0.028 gpm	2R17

Note: 2-CS-050 and 2-CS-051 are two parallel valves in series with 2-SI-459. Both valves were historically tested in lieu of testing 2-SI-459. 2-SI-459 will be the normally tested valve in this path, with the ability to test 2-CS-050 and 2-CS-051 maintained as an alternative.

10 CFR 50.55a Request Number V-002

Firewater to AFW Pump Suction Header Manual Valve Test Frequency

Proposed Alternative
In Accordance with 10 CFR 50.55a(a)(3)(ii)

Hardship or Unusual Difficulty without a Compensating Increase in Level of Quality or Safety

ASME Code Component(s) Affected

Valve Number	Class	Category	Function
2-FIRE-94A	3	B	"A" Aux Feed Pump Emergency Firewater Supply Valve
2-FIRE-94B	3	B	"B" Aux Feed Pump Emergency Firewater Supply Valve
2-FIRE-94C	3	B	Turbine Auxiliary Feed Pump Emergency Firewater Supply Valve

Applicable Code Edition and Addenda

ASME OM Code 2001 Edition through 2003 Addenda

Applicable Code Requirement

ISTC-3540 Manual Valves. Manual valves shall be full stroke exercised at least once every five years, except where adverse conditions exist. 10CFR 50.55a(B)(3)(vi) reduces this frequency from 5-years to 2-years.

Reason for Request

Pursuant to 10 CFR 50.55a, "Codes and Standards", paragraph (a)(3)(ii), relief is requested from the requirement of ASME OM Code ISTC-3540, as modified by 10CFR 50.55a(B)(3)(vi),which requires exercise of manual valves on a 2-year frequency.

Millstone proposes to place these valves in a sample exercise program and exercise one valve each refueling outage in lieu of a full stroke exercise every two years.

Given the associated hardship, testing of these valves each refueling does not provide a compensating increase in the level of quality or safety for the following reasons:

1. Manual cycling the valves would result in chemical and particulate contamination of the AFW system and/or CST.

10 CFR 50.55a Request Number V-002

2. Testing involves significant maintenance preparation and restoration activities, including temporary piping modifications, proper disposal of the chlorinated firewater, and extensive system flushing after valve cycling.

3. Cycling of all three valves at each refueling would negatively impact the outage schedule and the availability of AFW pumps to support this function.

Proposed Alternative and Basis for Use

The normally closed 6-inch manually operated gate valves serve as the Firewater/Auxiliary Feedwater (AFW) system boundary valves. The normally isolated firewater system provides an alternate source of water to the AFW pumps during long term cooling in the event the normal condensate storage tank (CST) supply is depleted. An 8-inch firewater header supplies the three parallel 6-inch lines, one for each of the three AFW pumps, which tie directly into the normal AFW pump suction paths from the CST. There is no drain path available between the 8-inch header and the three 6-inch isolation valves.

Manual full stroke testing is a burden since the firewater discharge flow path goes directly to the suction of the AFW pumps and cycling the valves would result in chemical and particulate contamination of the AFW system and/or CST. As a result, a spool piece in each AFW pump suction line must be removed and the firewater routed away from the AFW system using temporary piping. This involves significant maintenance preparation and restoration activities, including temporary piping modifications, proper disposal of the chlorinated firewater, and extensive system flushing required after each valve cycle to insure the AFW system does not become contaminated when restored. One motor-driven AFW pump is required to be available during outages to supply emergency makeup to the spent fuel pool. Cycling of all three valves at each refueling would negatively impact the outage schedule and the availability of AFW pumps to support this function. There have been no identified problems from historical testing of these valves during the third 10-year interval.

Millstone proposes testing 2-FIRE-94A/B/C on a sample frequency of one valve in the group each refuel cycle. These valves are the same size and model from the same manufacturer, and are installed in the same application and orientation, meeting the grouping methodology allowed in NUREG 1482 for check valve testing. One valve in the group will be manually full stroked every refueling outage, and all the valves in the group will be manually full stroked within three refueling cycles. If any valve is incapable of being full stroke exercised, the remaining valves in the group will be manually full stroke tested in the same outage. A full stroke exercise test will be performed after any maintenance that could affect the full stroke capability of the valve.

This alternative test plan avoids undue hardship, lessens the unavailability of safety equipment required during outages, and is adequate to meet the fundamental objective of detecting degradation.

10 CFR 50.55a Request Number V-002

Duration of Proposed Alternative

This proposed alternative will be utilized for the fourth 10-year interval.

Precedents

This relief request was previously approved for a similar request in third 10-year interval at MPS2 as R-001, dated May 9, 2001 (TAC No. MA9162).

ATTACHMENT 4.6

ALTERNATE TEST JUSTIFICATION (ATJ) INDEX

Alt. Test Justification No.	Description
ATJ-001	Charging Header Containment Isolation Valve
ATJ-002	HPSI Pump Discharge Check Valve
ATJ-003	Boric Acid Check Valve
ATJ-004	Main Steam Isolation Valve
ATJ-005	Charging Header Supply Valve
ATJ-006	LPSI Header Loop Check Valve
ATJ-07	Shutdown Cooling Suction Header Isolation Valve
ATJ-08	ESF Pumps Min Flow Recirculation Header Isolation Valve
ATJ-09	Safety Injection System To Loop Non-Return Check Valve
ATJ-10	Auxiliary Feedwater Pump Discharge Check Valve
ATJ-11	S/G Auxiliary Feedwater Supply Air-Assist Check Valve
ATJ-12	RBCCW Header Containment Valve
ATJ-13	Reactor Coolant Pumps Bleedoff Control Valve Assembly
ATJ-14	Volume Control Tank To Charging System Outlet Valve
ATJ-15	Letdown Header SIAS Isolation Valve
ATJ-16	Auxiliary Spray Charging Header Supply Valve
ATJ-17	Reactor Head Vent Solenoid Valve
ATJ-18	Shutdown Cooling Suction Header Containment Isolation Valve
ATJ-19	Loop Non-Return Check Leakoff Drain Stop Valve
ATJ-20	Auxiliary Feedwater Turbine Supply Check Valve
ATJ-21	Loop Charging Header Non-Return Check Valve
ATJ-22	Charging Pumps Refueling Water Storage Tank Suction Check Valve
ATJ-23	Letdown Header Outside Containment Isolation Valve
ATJ-24	RWST Outlet Header Check Valve
ATJ-25	HPSI Header Check Valve
ATJ-26	Containment Purge Supply Containment Isolation Valve
ATJ-27	LPSI Pump Discharge Check Valve
ATJ-28	Safety Injection Tank Outlet Valve

ALTERNATE TEST JUSTIFICATION (ATJ) INDEX CONT'D

ATJ-29	Letdown Heat Exchanger Outlet Temperature Control Valve
ATJ-30	Pressurizer Power Operated Relief Valve
ATJ-31	Hydrogen Purge Isolation Control Valve
ATJ-32	Bonnet Expansion Volume Check Valve
ATJ-33	Safety Injection Tank Vent To Containment Valve
ATJ-34	Aux Feedwater Pump Discharge Header Cross-Tie Valve
ATJ-35	S/G Main Steam Isolation Bypass Valve
ATJ-36	Steam Generator Atmospheric Dump Control Valve
ATJ-37	RWST Outlet Header Isolation Valve
ATJ-38	Containment Sump Outlet Header Isolation
ATJ-39	RBCCW Pump Discharge Check Valve
ATJ-40	HPSI Header Injection Valve
ATJ-41	Station Air Check Valve to Containment Air Monitoring System

ATTACHMENT 4.7

ALTERNATE TEST JUSTIFICATIONS

Alternate Test Justification ATJ-001

ASME Code Component(s) Affected

2-CH-429

Category A

Class 2

Safety Function

This valve must open to provide borated water to the RCS via the charging pumps following a LOCA. This valve must also open to provide an alternate flowpath for boron precipitation control. This valve must close to provide containment isolation for Penetration 3. This valve must also close to provide an RCS pressure boundary.

Justification

Operation of this valve during plant operation would cause undesirable thermal transients on the regenerative heat exchanger. This component has a limited number of design thermal transients.

Alternative Frequency

This valve will be stroke time open and closure tested during cold shutdown per ISTC-3521(c).

Alternate Test Justification ATJ-002

ASME Code Component(s) Affected

2-SI-405
2-SI-414
2-SI-427

Category C

Class 2

Safety Function

These valves must open to provide a flow path from the discharge of the High Pressure Safety Injection (HPSI) pump to the RCS. These valves must close to prevent backflow through an idle HPSI pump.

Justification

These valves cannot be full stroke exercised (open) during reactor operation since the only flow path is into the RCS. HPSI pumps do not have sufficient discharge pressure to overcome RCS pressure. Valves cannot be full stroke exercised during cold shutdown since full HPSI flow into the RCS could result in overpressurization.

Memorandum DE2-95-1023 indicates that the system requirements needed to verify that the valve obturator travels to the closed position cannot be met without exceeding the design bases limits for the Emergency Diesel Generator (EDG). Thus, for the multi-hour period when this alignment exists in support of testing, should a LOCA and coincident Loss of Normal Power (LNP) occur the EDG would be overloaded and generator terminal voltage would drop below design basis levels. While unlikely, this potential loss of one complete facility is an unacceptable risk.

ISTC permits deferral of full stroke testing to Refueling if full stroke testing during reactor operation or Cold Shutdown is impractical.

Alternative Frequency

These valves will be full stroke open and closure tested during refueling outages per ISTC-3522(c).

Alternate Test Justification ATJ-003

ASME Code Component(s) Affected

2-CH-177
2-CH-190

Category C

Class 2

Safety Function

These valves must open to provide a flow path from the Boric Acid System (BAS) pumps to the suction of the charging pumps. These valves must close to prevent reverse flow through BAS from the suction of the charging pumps.

Justification

Operation of these valves during normal plant operation would allow concentrated boric acid to flow directly to the charging pump suction header resulting in a rapid, uncontrolled reduction in reactor power. These valves cannot be full stroke tested during cold shutdown because of Low Temperature Overpressure Protection (LTOP) technical specification restrictions (Technical Specification Amendment 218).

Alternative Frequency

These valves will be full stroke open and closure tested during refueling outages per ISTC-3522(c).

Alternate Test Justification ATJ-004

ASME Code Component(s) Affected

2-MS-64A
2-MS-64B

Category BC

Class 2

Safety Function

These valves must close to prevent blowdown of steam following a main steam line break and to isolate containment from the main steam system.

Justification

These valves cannot be full stroked at power. Closure of these valves during unit operation would result in a reactor trip. Full stroke testing of these valves requires plant shutdown.

A part stroke test performed at power is impractical and is no longer required by Technical Specifications Amendment 219. As quoted in NUREG 1482, Section 4.2.4: "Main Steam Isolation Valves (MSIVs) should not be tested at power, since even a part-stroke exercise increases the risk of a valve closure when the unit is generating power."

Alternative Frequency

These valves will be stroke time closure and failure tested during cold shutdown per ISTC-3521(c).

Alternate Test Justification ATJ-005

ASME Code Component(s) Affected

2-CH-518
2-CH-519

Category A

Class 1

Safety Function

These valves must open to supply borated water from the charging pumps to the RCS. These valves must close to provide containment isolation for Penetration 3. These valves must also close to establish an alternate borated water flowpath through the pressurizer auxiliary spray line.

Justification

Closing 2-CH-518 or 2-CH-519 prevents the Chemical and Volume Control System (CVCS) from being able to fulfill its Small Break Loss of Coolant Accident (SBLOCA) in the event of a SBLOCA in the piping not affected by the valve closure. Thus closing 2-CH-518 or 2-CH-519 during reactor operation would place the unit in an unanalyzed condition, require entry into Technical Specification 3.0.3, and require unit shutdown within one hour.

Alternative Frequency

These valves will be stroke time open, stroke time closure and failure tested during cold shutdown per ISTC-3521(c).

Alternate Test Justification ATJ-006

ASME Code Component(s) Affected

2-SI-114
2-SI-124
2-SI-134
2-SI-144

Category C

Class 2

Safety Function

These valves must open to provide a flow path from the Safety Injection (SI) System to its associated RCS cold leg. These valves must close to prevent over pressurization of the LPSI piping.

Justification

These valves cannot be full stroke or part stroke exercised open using normal injection path during reactor operations since the LPSI pumps cannot overcome Safety Injection Tank (SIT) pressure downstream of the 2-SI-706 (series) valves. Verifying close function during reactor operation or cold shutdown would expose the LPSI system to potential overpressurization.

According to NUREG-1482, Revision 0, Section 4.1.2, the NRC staff determined that non-intrusive techniques meet the code requirements for verifying disk movement for full stroke exercising – opening and closing – of check valves. The non-intrusive verification allows flow testing at repeatable conditions to be performed on all valves in a group while requiring non-intrusive tests of only one of the group on a rotating basis.

This discussion of the sampling scheme was omitted from NUREG-1482, Section 4.1.2, Revision 1. However, the conclusion in NUREG-1482, Revision 0, that flow testing of all the valves in the group at repeatable conditions while monitoring one valve on a rotating basis meets the requirements of the code, is still valid because the technical basis for the sampling plan meeting code requirements has not changed.

Alternative Frequency

These valves will be full stroke open tested during cold shutdown per ISTC-3522(b). These valves will be full stroke closure tested using non-intrusive methods in a sampling plan during refueling outages per ISTC-3522(c).

Alternate Test Justification ATJ-007

ASME Code Component(s) Affected

2-SI-652

Category B

Class 1

Safety Function

This valve must open to provide a flow path for the initiation of boron precipitation control following a LOCA. This valve must also open to provide a flow path for the initiation of shutdown cooling. This valve must close to isolate the shutdown cooling system from the RCS and provide RCS pressure boundary.

Justification

This valve is locked closed when RCS pressure exceeds 300 psig to protect the low-pressure shutdown cooling piping. Valve exercise would require violation of plant interlocks.

Alternative Frequency

This valve will be stroke time open and closure tested during cold shutdown per ISTC-3521(c).

Alternate Test Justification ATJ-008

ASME Code Component(s) Affected

2-SI-659
2-SI-660

Category A

Class 2

Safety Function

These valves must open to provide a flow path for minimum flow recirculation for the Containment Spray (CS) pumps, the LPSI pumps, and the HPSI pumps. These valves must close following a Containment Sump Recirculation Actuation Signal (SRAS) to prevent transfer of containment sump water to the RWST.

Justification

Valves are required to be locked open with valve operator power removed to assure recirculation flow path during reactor operation.

Alternative Frequency

These valves will be stroke time open, stroke time closure and failure tested during cold shutdown per ISTC-3521(c).

Alternate Test Justification ATJ-009

ASME Code Component(s) Affected

2-SI-706A
2-SI-706B
2-SI-706C
2-SI-706D

Category C

Class 1

Safety Function

These valves must open to provide a flow path for the LPSI and HPSI to the RCS. These valves must close to ensure SIT inventory is directed to the RCS. These valves must also close to provide a RCS pressure boundary. These valves must also close if required to isolate containment from the associated Safety Injection cold leg injection line.

Justification

These valves cannot be full stroke exercised during reactor operation because the only full flow path is into the RCS. There are no pumps capable of providing design flow into the RCS during reactor operation. Further, injecting cold water directly into the RCS would cause undue thermal stresses.

According to NUREG-1482, Revision 0, Section 4.1.2, the NRC staff determined that non-intrusive techniques meet the code requirements for verifying disk movement for full stroke exercising – opening and closing – of check valves. The non-intrusive verification allows flow testing at repeatable conditions to be performed on all valves in a group while requiring non-intrusive tests of only one of the group on a rotating basis.

This discussion of the sampling scheme was omitted from NUREG-1482, Section 4.1.2, Revision 1. However, the conclusion in NUREG-1482, Revision 0, that flow testing of all the valves in the group at repeatable conditions while monitoring one valve on a rotating basis meets the requirements of the code, is still valid because the technical basis for the sampling plan meeting code requirements has not changed.

Alternative Frequency

These valves will be full stroke open tested during cold shutdown per ISTC-3522(b). These valves will be full stroke closure tested using non-intrusive methods in a sampling plan during refueling outages per ISTC-3522(c).

Alternate Test Justification ATJ-010

ASME Code Component(s) Affected

2-FW-7
2-FW-8A
2-FW-8B

Category C

Class 3

Safety Function

These valves must open to provide a flow path for AFW flow to the steam generators from the AFW pumps. These valves must close to prevent diversion of AFW pump flow back through its associated pump.

Justification

Valve exercise would require establishing flow through the AFW piping to the steam generator. Introduction of this cold water during plant operation could result in steam generator level instability and/or undesirable thermal transients to the feed nozzles.

Alternative Frequency

These valves will be full stroke open and closure tested during cold shutdown per ISTC-3522(b).

Alternate Test Justification ATJ-011

ASME Code Component(s) Affected

2-FW-12A
2-FW-12B

Category C

Class 2

Safety Function

These valves must open to allow AFW supply to the steam generators through the main feedwater supply lines. These valves must close to provide containment isolation, and to isolate AFW in the event of an upstream pipe break.

Justification

Valve operator exercise without AFW flow will not result in obturator exercise. The valve actuator is not connected to the obturator. The valve has no part stroke capability.

Valve obturator exercise would require establishing flow through the AFW piping to the steam generator. Introduction of this cold water during plant operation could result in steam generator level instability and/or undesirable thermal transients to the feed nozzles.

Alternative Frequency

These valves will be full stroke open and closure tested during cold shutdown per ISTC-3522(b).

Alternate Test Justification ATJ-012

ASME Code Component(s) Affected

2-RB-30.1A
2-RB-30.1B
2-RB-37.2A
2-RB-37.2B

Category A

Class 2

Safety Function

These valves must close to isolate containment from the reactor vessel support concrete cooling coils and the Reactor Coolant Pump (RCP) oil cooler lines.

Justification

Exercising these valves would result in interrupting cooling water flow to the RCP thermal barriers and oil coolers as well as other loads required during reactor operation.

Alternative Frequency

These valves will be stroke time closure tested during cold shutdown per ISTC-3521(c).

Alternate Test Justification ATJ-013

ASME Code Component(s) Affected

2-CH-198
2-CH-505
2-CH-506

Category A

Class 2

Safety Function

These valves must close to isolate containment from the RCP bleedoff line.

Justification

These valves are required to be open any time the RCPs are operating. Closing these valves could cause seal damage or failure.

Alternative Frequency

These valves will be stroke time closure and failure tested during cold shutdown per ISTC-3521(c).

Alternate Test Justification ATJ-014

ASME Code Component(s) Affected

2-CH-501

Category B

Class 2

Safety Function

This valve must close to isolate the charging pump suction from the Volume Control Tank (VCT).

Justification

Exercising this valve would require interruption of charging pump flow, resulting in an undesirable thermal transient on the regenerative heat exchanger. Alternate charging pump suction sources contain concentrated boric acid. Use of these sources would cause a rapid, uncontrolled reactor power reduction.

Alternative Frequency

This valve will be stroke time closure tested during cold shutdown per ISTC-3521(c).

Alternate Test Justification ATJ-015

ASME Code Component(s) Affected

2-CH-515
2-CH-516

Category A

Class 2

Safety Function

These valves must close to isolate containment from the RCS letdown line.

Justification

Operation of these valves during plant operation would cause undesirable thermal transients of approximately 400 °F on the regenerative heat exchanger. This component has a limited number of design thermal transients. Valve actuator design precludes part-stroke testing.

Alternative Frequency

These valves will be stroke time closure and failure tested during cold shutdown per ISTC-3521(c).

Alternate Test Justification ATJ-016

ASME Code Component(s) Affected

2-CH-517

Category A

Class 1

Safety Function

This valve must open to provide a flow path from the HPSI pump(s) into the RCS hot leg, via the pressurizer. This valve must close to isolate containment from the charging header to the auxiliary spray line.

Justification

Exercising this valve during reactor operation could cause loss of RCS pressure control with consequent unplanned shutdown and/or excessive thermal transient on the pressurizer spray piping.

Alternative Frequency

This valve will be stroke time open, stroke time closure and failure tested during cold shutdown per ISTC-3521(c).

Alternate Test Justification ATJ-017

ASME Code Component(s) Affected

2-RC-414
2-RC-415
2-RC-416
2-RC-417

Category B

Class 1

Safety Function

These valves must open to provide an emergency vent path for the RCS. These valves must close to provide an RCS pressure boundary.

Justification

These valves are designed for emergency-use only. Testing of these valves during operation could result in a LOCA.

Alternative Frequency

These valves will be stroke time open, stroke time closure and failure tested during cold shutdown per ISTC-3521(c).

Alternate Test Justification ATJ-018

ASME Code Component(s) Affected

2-SI-651

Category A

Class 1

Safety Function

This valve must open to provide a flow path for the initiation of boron precipitation control following a LOCA. This valve must also open to provide a flow path for the initiation of shutdown cooling. This valve must close to isolate the shutdown cooling system from the RCS and provide RCS pressure boundary. This valve must also close to isolate containment from the LPSI system.

Justification

This valve is locked closed when RCS pressure exceeds 300 psig to protect the low-pressure shutdown cooling system piping. This valve exercise would require violation of plant interlocks.

Alternative Frequency

This valve will be stroke time open and closure tested during cold shutdown per ISTC-3521(c).

Alternate Test Justification ATJ-019

ASME Code Component(s) Affected

2-SI-618
2-SI-628
2-SI-638
2-SI-648

Category B

Class 1

Safety Function

These valves must close to provide system pressure boundary integrity for the SI cold leg injection header.

Justification

These valves are inaccessible for observation during reactor operation.

Alternative Frequency

These valves will be failure tested during cold shutdown per ISTC-3521(c).

Alternate Test Justification ATJ-020

ASME Code Component(s) Affected

2-MS-4A
2-MS-4B

Category C

Class 3

Safety Function

These valves must open to provide a flow path from the steam generator to the turbine-driven auxiliary feedwater (TDAFW) pump. These valves must close to prevent reverse flow of steam from an intact steam generator.

Justification

There is no flow path available during reactor operation that will assure the valve passes full design flow. Operation of the TDAFW pump at design flow conditions would cause thermal shock to the feedwater piping, result in steam generator level control instability, and possible reactor trip.

Alternative Frequency

These valves will be full stroke open and closure tested during cold shutdown per ISTC-3522(b).

Alternate Test Justification ATJ-021

ASME Code Component(s) Affected

2-CH-432
2-CH-433

Category C

Class 1

Safety Function

These valves must open to provide a flow path from the charging system to the RCS. These valves must close to provide RCS pressure boundary isolation.

Justification

Alternate Test Justification 005 identifies that 2-CH-518 and 2-CH-519 cannot be stroked closed during reactor operation. Since 2-CH-518 and 2-CH-519 cannot be closed during reactor operation, Charging Header Check Valves 2-CH-432 and 2-CH-433 cannot be verified open or closed. The valves are in parallel flow paths. Without closure of 2-CH-518 and 2-CH-519 there is no method to verify which valve is passing the indicated flow rate for the open verification, or back-leakage for the closure test.

Alternative Frequency

These valves will be full stroke open and closure tested during cold shutdown per ISTC-3522(b).

Alternate Test Justification ATJ-022

ASME Code Component(s) Affected

2-CH-191

Category C

Class 2

Safety Function

This valve must open to provide a flow path from the RWST to the charging pump suction. This valve must close to prevent backflow from the charging pump suction header to the RWST.

Justification

Full stroke testing is impractical during reactor operation. Full stroke operation of this valve during plant operation could allow high concentration boric acid from the RWST to flow directly to the charging pump suction resulting in a rapid reduction of reactor power or, if blended makeup were used, cause significant instabilities in reactor power. This valve can be part-stroke exercised during scheduled downpower operations and cold shutdowns. This valve cannot be full stroke exercised during cold shutdown because of LTOP limits on charging pump operation (Technical Specification Amendment 218).

Alternative Frequency

This valve will be full stroke open and closure tested during refueling outages per ISTC-3522(c).

Alternate Test Justification ATJ-023

ASME Code Component(s) Affected

2-CH-089

Category A

Class 2

Safety Function

This valve must close to isolate containment from the letdown header.

Justification

Operation of this valve during plant operation would cause undesirable thermal transients on the regenerative heat exchanger. This component has a limited number of design thermal transients.

Alternative Frequency

This valve will be stroke time closure and failure tested during cold shutdown per ISTC-3521(c).

Alternate Test Justification ATJ-024

ASME Code Component(s) Affected

2-CS-14A
2-CS-14B

Category A

Class 2

Safety Function

These valves must open to provide a flow path from the RWST to the ECCS pumps. These valves must close to isolate the RWST from the ECCS pumps upon initiation of sump recirculation.

Justification

These valves cannot be full stroke exercised during reactor operation because the only full flow path is into the RCS. There are no pumps capable of providing design flow during reactor operation. These valves cannot be full stroke exercised during cold shutdown since RCS overpressurization could result.

Alternative Frequency

One of these valves will be disassembled and inspected each refueling outage per ISTC-5221(c).

Alternate Test Justification ATJ-025

ASME Code Component(s) Affected

2-SI-009	2-SI-010	2-SI-011
2-SI-012	2-SI-113	2-SI-123
2-SI-133	2-SI-143	

Category C

Class 2

Safety Function

These valves must open to provide a flow path from the discharge of the HPSI pumps to the RCS during the injection and recirculation modes of ECCS operation. These valves must close to prevent diversion of injection flow through an out-of-service HPSI system injection line.

Justification

These valves cannot be full stroke exercised during reactor operation since the only full flow path is into the RCS. HPSI pumps do not have sufficient discharge pressure (1200 PSIG) to overcome RCS pressure (2250 PSIA). The valves cannot be full stroke exercised during cold shutdown since full HPSI flow into the RCS could result in overpressurization.

According to NUREG-1482, Revision 0, Section 4.1.2, the NRC staff determined that non-intrusive techniques meet the code requirements for verifying disk movement for full stroke exercising – opening and closing – of check valves. The non-intrusive verification allows flow testing at repeatable conditions to be performed on all valves in a group while requiring non-intrusive tests of only one of the group on a rotating basis.

This discussion of the sampling scheme was omitted from NUREG-1482, Section 4.1.2, Revision 1. However, the conclusion in NUREG-1482, Revision 0, that flow testing of all the valves in the group at repeatable conditions while monitoring one valve on a rotating basis meets the requirements of the code, is still valid because the technical basis for the sampling plan meeting code requirements has not changed.

Alternative Frequency

These valves will be full stroke open tested during refueling outages per ISTC-3522(c). These valves will be full stroke closure tested using non-intrusive methods during refueling outages per ISTC-3522(c).

Alternate Test Justification ATJ-026

ASME Code Component(s) Affected

2-AC-4
2-AC-5
2-AC-6
2-AC-7

Category A

Class 2

Safety Function

These valves must close to isolate containment from the Containment Building Ventilation system.

Justification

These valves are locked closed during Modes 1 through 4. They cannot be operated except in Modes 5 and 6. The credited valve function per the Alternate Source Term option is to be closed within 30 minutes of a fuel handling accident. They have no safety function in Mode 5, and are tested prior to starting refueling operations.

Alternative Frequency

These valves will be stroke time closure and failure tested during refueling outages per ISTC-3521(e).

Alternate Test Justification ATJ-027

ASME Code Component(s) Affected

2-SI-434
2-SI-446

Category C

Class 2

Safety Function

These valves must open to provide a flow path for its associated LPSI pump flow to the RCS cold legs. These valves must close to prevent the diversion of LPSI flow through an idle LPSI pump.

Justification

Valves cannot be tested during reactor operation since there is no practical method for establishing significant flow rates. Use of the 6-inch CS and SI test line would require declaring both LPSI pumps and one train of CS inoperable during the testing. Declaring two LPSI pumps inoperable places the unit in an unanalyzed condition, requiring shutdown within one hour.

Alternative Frequency

These valves will be full stroke open and closure tested during cold shutdown per ISTC-3522(b).

Alternate Test Justification ATJ-028

ASME Code Component(s) Affected

2-SI-614
2-SI-624
2-SI-634
2-SI-644

Category B

Class 1

Safety Function

These valves must open to provide a flow path from the SIT to the RCS. These valves must close to prevent the discharge of nitrogen into the RCS.

Justification

These valves are locked open during reactor operation. These valves are required to be closed when reducing RCS pressure below SIT pressure to prevent uncontrolled discharge of tank contents to the RCS. The valves open automatically when pressurizer pressure is greater than 300 psig. The valves can only be stroke tested in Mode 4 with RCS pressure greater than 300 and less than 1750 psia.

Alternative Frequency

These valves will be stroke time open and closure tested during cold shutdown per ISTC-3521(c).

Alternate Test Justification ATJ-029

ASME Code Component(s) Affected

2-RB-402

Category B

Class 3

Safety Function

This valve must close to isolate Reactor Building Closed Cooling Water (RBCCW) flow to the letdown heat exchanger.

Justification

Testing of this valve during plant operation would cause undesirable thermal transients on the regenerative heat exchanger since charging flow would have to be stopped during the test. The regenerative heat exchanger has a limited number of design thermal transients. Further, reactivity control would be jeopardized by the loss of charging flow and the valve realignment required to perform the test.

Alternative Frequency

This valve will be stroke time closure and failure tested during cold shutdown per ISTC-3521(c).

Alternate Test Justification ATJ-030

ASME Code Component(s) Affected

2-RC-402
2-RC-404

Category B

Class 1

Safety Function

These valves must open to provide over pressure protection to the RCS.

Justification

Per GL 90-06, Power Operated Relief Valves (PORVs) should not be tested during plant operation, but recommends that in addition to 4.0.5 requirements, an exercise test be performed under conditions of Mode 3 or 4. This will be accomplished under the augmented full stroke open test at cold shutdown frequency.

To measure stroke time and obtain solenoid-operated valve diagnostic data, temporary test equipment is installed to record current traces from the solenoid coil and position indication switches. These valves are located inside containment within the pressurizer blockhouse. The test equipment is operated by specialists who are not part of the Operations shift complement and may not be available to support testing during unplanned shutdowns. It is not practical to install test equipment during each cold shutdown to obtain stroke time data. Refueling frequency stroke time testing is warranted and specifically allowed by GL 90-06.

Alternative Frequency

These valves will be stroke time open tested during refueling outages per ISTC-3521(e).

Alternate Test Justification ATJ-031

ASME Code Component(s) Affected

2-EB-91
2-EB-100

Category A

Class 2

Safety Function

These valves must open to provide a flow path for hydrogen purge of containment following a LOCA. These valves must close to isolate containment from the hydrogen purge system.

Justification

These valves are not accessible during reactor operation. Failure mode test requires access to the valves to remove instrument air pressure.

Alternative Frequency

These valves will be failure tested during cold shutdown per ISTC-3521(c).

Alternate Test Justification ATJ-032

ASME Code Component(s) Affected

2-CS-140
2-CS-141

Category C

Class 2

Safety Function

These valves must open to provide a flow path from the bonnet of the Containment Sump outlet isolation valve to the Pressure Locking Thermal Binding Expansion Volume. These valves must close to prevent gas leakage from the Pressure Locking Thermal Binding Expansion Volume to the ECCS.

Justification

The only practical method of verifying valve full stroke is a system leakage test. Performance of the system leakage test during operation or during cold shutdown is not practical since setting up test equipment and performing the test would unduly complicate the conduct of cold shutdown operations. (NUREG 1482, section 4.1.4 recognizes that set up and performance of the leakage testing may be impractical during cold shutdown and power operations)

Alternative Frequency

These valves will be full stroke open and closure tested during refueling outages per ISTC-3522(c).

Alternate Test Justification ATJ-033

ASME Code Component(s) Affected

2-SI-613
2-SI-623
2-SI-633
2-SI-643

Category B

Class 2

Safety Function

These valves must open to reduce SIT pressure. These valves must remain closed to maintain SIT pressure.

Justification

These valves are maintained closed during the operating cycle. Testing the valves quarterly is impractical since opening the valve during operation would result in an uncontrolled blow down of the SIT with no method to isolate the SIT from the valve. In the power operation mode, testing would put the unit in a condition outside the bounds of the assumed Chapter 14 LOCA analysis. The SITs are required to maintain a nitrogen covered-pressure between 200-250 psig in Mode 1 through 3 (Technical Specification 3.5.1.d).

Alternative Frequency

These valves will be stroke time open tested during cold shutdown per ISTC-3521(c).

Alternate Test Justification ATJ-034

ASME Code Component(s) Affected

2-FW-44

Category B

Class 3

Safety Function

This valve must open to align both motor-driven, and the turbine-driven AFW pumps to either steam generator. This valve must close to isolate AFW to the corresponding faulted steam generator in the event of a main steam line break (MSLB).

Justification

Valve 2-FW-44 is the AFW cross-tie isolation between the two steam generators. Stroke testing this valve at power places the plant in a configuration not assumed in the accident analysis. The valve is normally open and no analysis assumes that the valve is closed at the beginning of any accident. During a loss of normal feedwater event and 2-FW-44 initially closed, there will be less total steam generator liquid mass available for RCS heat removal than the limiting case in the Final Safety Analysis Report (FSAR). Closing this valve at power causes undue risk by placing the plant in a configuration not assumed in the accident analysis. Reference Safety Analysis memo NE-01-F-036.

Alternative Frequency

This valve will be stroke time open and closure tested during cold shutdown per ISTC-3521(c).

Alternate Test Justification ATJ-035

ASME Code Component(s) Affected

2-MS-65A
2-MS-65B

Category B

Class 2

Safety Function

These valves must close to prevent blowdown of steam following a MSLB and to isolate containment from the main steam system.

Justification

The MSIV bypass valves are normally closed and are only opened during startup to warm up the main steam lines and equalize pressure across the MSIVs. The safety function of the valves is to isolate non-safety related portions of main steam under accident conditions and prevent uncontrolled blowdown of more than one steam generator, in the event of a MSLB. The valves remain closed during the cycle, with the opening coil removed from the valves. Although the valves are tested quarterly, it is considered a hardship because the risk of performing testing outweighs the benefits achieved. Testing quarterly vs. cold shutdowns does not provide any increase in safety. Since the valves are not called upon to change position during the cycle for any safety function, opening them for testing purposes only, decreases safety by increasing the exposure to the condition whereby the valves are required to isolate under accident conditions. Therefore, it is concluded that the potential adverse impact on safety, equipment reliability, and resources constitutes a hardship allowing cold shutdown stroke time testing to assure operational readiness.

Alternative Frequency

These valves will be stroke time closure tested during cold shutdown per ISTC-3521(c).

Alternate Test Justification ATJ-036

ASME Code Component(s) Affected

2-MS-190A
2-MS-190B

Category B

Class 2

Safety Function

These valves must open to allow a release of steam to the atmosphere to cool the unit to shutdown cooling conditions. These valves must close to provide containment isolation.

Justification

The Atmospheric Dump Valves (ADVs) are credited with manual operation to perform a controlled release of steam to the atmosphere. Although not credited in the accident analysis, an augmented function of the ADVs is to automatically open above 905 psig steam pressure on a reactor trip from power to avoid challenging the main steam safety valves. Testing the open and fail-safe functions quarterly involves manual isolation with the 2-MS-3A/B valves. Personnel safety is challenged to full cycle the ADVs and the manual isolation valves during power operation, especially in the summer months. CR-03-08984, CR-03-06862, and CR-03-06122 detail these challenges. Section 3.1.1 of NUREG 1482 provides justification for extension of test frequency in certain cases where valves could be cycled quarterly, but hardship and risk may outweigh the benefits of quarterly stroking. Procedural allowance to perform these tests at power as required for post-maintenance retests, will be maintained.

Alternative Frequency

These valves will be full stroke open, full stroke closure, and failure tested during cold shutdown per ISTC-3521(c).

Alternate Test Justification ATJ-037

ASME Code Component(s) Affected

2-CS-13.1A
2-CS-13.1B

Category B

Class 2

Safety Function

These valves must remain open to provide a flow path from the RWST to the ECCS pumps. These valves must close to isolate the RWST from the ECCS pumps upon initiation of sump recirculation.

Justification

Stoke testing 2-CS-13.1A and B while in Modes 1 through 4 requires entry into multiple Technical Specification Action Statements (TSASs) as HPSI, LPSI and CS pumps on the affected facility must be declared inoperable while these valves are closed. NUREG 1482, Section 3.1.2 "Entry Into a Limiting Condition for Operation to Perform Testing" states "Licensees must generally avoid entry into multiple LCOs". Performance of this testing while at power results in a Probable Risk Assessment (PRA) 'Orange' condition. The benefit of quarterly testing is outweighed by the impact to safety by removal of the entire train from service.

Alternative Frequency

These valves will be stroke time closure tested during cold shutdown per ISTC-3521(c).

Alternate Test Justification ATJ-038

ASME Code Component(s) Affected

2-CS-16.1A
2-CS-16.1B

Category A

Class 2

Safety Function

These valves must open to provide a flow path from the containment sump to the suction of the ECCS pumps. These valves must close to prevent diversion of flow from the RWST during the injection phase of a LOCA and to provide containment isolation.

Justification

Stroke testing 2-CS-16.1A and B while in Modes 1through 4 requires entry into multiple TSASs as HPSI, LPSI and CS pumps on the affected facility must be declared inoperable while these valves are open. NUREG 1482, Section 3.1.2 "Entry Into a Limiting Condition for Operation to Perform Testing" states that "Licensees must generally avoid entry into multiple LCOs". Performance of this testing while at power increases core melt frequency and results in a PRA 'Orange' condition. The benefit of quarterly testing is outweighed by the impact to safety by removal of the entire ECCS train from service.

Alternative Frequency

These valves will be stroke time open and closure tested during cold shutdown per ISTC-3521(c).

Alternate Test Justification ATJ-039

ASME Code Component(s) Affected

2-RB-2A
2-RB-2B
2-RB-2C

Category C

Class 3

Safety Function

These valves must open to provide a flow path from the associated RBCCW pump to the RBCCW header. These valves must close to prevent backflow through an idle RBCCW pump.

Justification

Achieving flow rate to demonstrate full open capability of RBCCW pump discharge check valves requires putting a shutdown cooling heat exchanger in service. This nullifies the RBCCW flow balance settings required for Modes 1-4, and requires entry into multiple TSASs. NUREG 1482, Section 3.1.2 "Entry Into a Limiting Condition for Operation to Perform Testing" states that "Licensees must generally avoid entry into multiple LCOs". The margin of safety gained by testing these valves quarterly is outweighed by the impact to safety of disturbing the flow balance.

Alternative Frequency

These valves will be full stroke open and closure tested during cold shutdown per ISTC-3522(b).

Alternate Test Justification ATJ-040

ASME Code Component(s) Affected

2-SI-616	2-SI-617	2-SI-626
2-SI-627	2-SI-636	2-SI-637
2-SI-646	2-SI-647	

Category B

Class 2

Safety Function

These valves must open to provide a flow path for HPSI flow to the RCS. These valves are normally open and administratively controlled in a preset throttled position to balance HPSI flow between RCS loops. They must close to isolate containment from the HPSI header.

Justification

Technical Specification 4.5.2i requires entry into a 4 hour LCO to restore the throttled position of these motor-operated valves (MOVs) following valve operation. Restoration of the throttled settings is a labor intensive activity performed within a locked high radiation area. Quarterly stroke testing increases the unavailability time of the system as well as the possibility of a mispositioning error, with very limited benefit gained by this testing. These valves are tested in the MOV program, which is recognized to provide more useful diagnostic data than the trending of stroke times. Section 3.1.1 of NUREG 1482 allows deferment of quarterly testing to cold shutdown frequency in situations where the benefit of quarterly testing is outweighed by the risk of performance.

Alternative Frequency

These valves will be stroke time open and closure tested during cold shutdown per ISTC-3521(c).

Alternate Test Justification ATJ-041

ASME Code Component(s) Affected

2-AC-525
2-AC-526

Category C

Class 2

Safety Function

These valves must remain closed to isolate the containment air sampling system from the non-safety related station air system.

Justification

These passive valves do not function during normal operation. They have no credited safety function to open. Thus there is no activity that would cause the valve obturator to leave the closed position. There is no design provision for testing these valves. The only practical method of verifying valve closure is with a system leakage test. Performance of a system leakage test during power operation is not practical since containment access would be required.

Performance of a system leakage test during cold shutdown is not practical since setting up test equipment and performing the test would unduly complicate the conduct of cold shutdown operations (NUREG 1482, section 4.1.6 recognizes that set up and performance of leakage testing may be impractical during cold shutdown and power operations.). Leakage testing at refueling frequency is required by Technical Specification 6.13. A part stroke open verification is performed following this leak test, satisfying the bi-directional testing requirement for check valves.

Alternative Frequency

These valves will be full stroke open and closure tested during refueling outages per ISTC-3522(c).

ATTACHMENT 4.8

STATION TECHNICAL POSITION INDEX

Technical Position No.	Description
TP-01	Bi-Directional Testing of Check Valves
TP-02	Check Valve Condition Monitoring
TP-03	Passive Valves Without Test Requirements
TP-04	Fail-Safe Testing of Valves
TP-05	Use of ASME Code Case OMN-8
TP-06	Classification of Skid-Mounted Components
TP-07	Manual Valve Exercise Frequency
TP-08	Categorization of IST Pumps (Group A or B)

ATTACHMENT 4.9

STATION TECHNICAL POSITIONS

Technical Position TP-01

Bi-directional Testing of Check Valves

Purpose

The purpose of this technical position is to establish the station position for the verification of the non-safety direction exercise testing of check valves by normal plant operations.

Applicability

This technical position is applicable to testing of the non-safety function (direction) of check valves that are included in the IST program. This position applies to those check valves required to be tested in accordance with Subsection ISTC and Appendix II - Condition Monitoring (ASME OM Code 2001 Edition through 2003 Addenda). This technical position does not apply to testing of the safety function (direction) of check valves included in the IST program.

Background

The ASME OM Code 2001 through 2003 Addenda section ISTC-3550, "Valves in Regular Use", states:

> "Valves that operate in the course of plant operation at a frequency that would satisfy the exercising requirements of this subsection need not be additionally exercised, provided that the observations otherwise required for testing are made and analyzed during such operation and recorded in the plant record at intervals no greater than specified in ISTC-3510."

Section ISTC-3510 requires that check valves shall be exercised nominally every three months with exceptions (for extended periods) referenced.

Section ISTC-5221(a)(2) states:

> "Check valves that have a safety function in only the open direction shall be exercised by initiating flow and observing that the obturator has traveled [to] either the full open position or to the position required to perform its intended function(s) (see ISTA-1100), and verify closure."

Section ISTC-5221(a)(3) states:

> "Check valves that have a safety function in only the close direction shall be exercised by initiating flow and observing that the obturator has traveled [to] at least the partially open position,[3] and verify that on cessation or reversal of flow, the obturator has traveled to the seat."
>
> "[3] The partially open position should correspond to the normal or expected system flow."

Technical Position TP-01

Normal or expected system flow may vary with plant configuration and alignment; however, the open "safety function" of a check valve typically requires a specified design accident flow rate. Since MPS2 Operations staff is trained in recognizing normal plant conditions, operator judgment is acceptable in determining the check valve non-safety direction by obtaining normal or expected flow rates for the plant operating condition.

In summary, check valve non-safety function direction is satisfactorily demonstrated by verifying closure or passing normal or expected flow, as applicable.

Position

MPS2 will verify the non-safety position of check valves included in the IST program. In lieu of a dedicated surveillance to perform the non-safety direction testing, the following alternate verifications may be performed as follows:

1. An appropriate means shall be determined which establishes the method for determining the open/closed non-safety function of the check valve during normal operations. The position determination may be by direct indicator, or by other positive means such as changes in system pressure, flow rate, level, temperature, seat leakage, etc. This determination shall be documented in the respective Condition Monitoring (CM) plan for the specific check valve group. For check valves included in the IST program and not included in the CM plan, this determination shall be documented in the IST Bases Document for the specific check valve group.

2. Observation and analysis of plant processes that verify a check valve is satisfying its non-safety direction function may be used. As an example, a check valve that has a safety function only in the closed direction and normally provides a flow path to maintain plant operations. If the check valve is not open to pass flow, an alarm or indication would identify a problem to the operator. The operator would respond to take appropriate actions. A condition report would then be generated for the abnormal plant condition that would identify the check valve failure.

3. Observation and analysis of plant logs and other records satisfied by operator or engineering reviews may be an acceptable method for verifying a check valves non-safety direction during normal plant operations.

The open/closed non-safety function shall be recorded at a frequency required by ISTC-3510, nominally every three months, with exceptions as provided, in plant records such as MPS2 operating logs, electronic rounds, chart recorders, automated data loggers, etc. The safety function direction testing requires a quality record in the form of a surveillance test. Records as indicated above in 1 through 3 are satisfactory for the non-safety direction testing. A condition report shall be generated for any issues regarding check valve operability.

Technical Position TP-01

Justification

This technical position requires that the method of determining the non-safety position be established and documented in either the CM plan or the IST Bases Document. The plant systems and operator actions provide for the observations and analysis that the valve is satisfying its non-safety function. Additionally, the recording of parameters that demonstrate valve position is satisfied at a frequency in accordance with ISTC-3510. These actions collectively demonstrate the non-safety position of IST program check valves in regular use as required by ISTC-3550.

Technical Position TP-02

Check Valve Condition Monitoring

Purpose

The purpose of this technical position is to document MPS2's position on establishing and implementing a Check Valve CM Program in accordance with mandatory Appendix II of the ASME OM Code 2001 Edition through 2003 Addenda. The CM program specified in Appendix II provides certain flexibility in establishing test types, examinations, and preventive maintenance activities along with their associated intervals, when justified based on check valve performance and operating condition.

Applicability

This technical position is applicable to certain valves or groups of valves as permitted by ISTC-5222, Condition Monitoring Program. All valves tested as part of the CM program will be denoted by "CM-XX," where XX is the valve's CM group number, under 'Technical Position' in the IST Program Plan.

Background

10CFR50.55a was revised 11/22/99 to endorse the ASME OMa-1995 Edition with 1996 Addenda with modifications. These modifications have been incorporated into the 2003 Addenda of the 2001 Edition of the ASME OM Code. This edition of the ASME OM Code provides provisions to implement a check valve CM program for selected valves or groups of valves in accordance with mandatory Appendix II. MPS2's IST program for the fourth 10-year interval has been developed in accordance with the ASME OM Code 2001 Edition through 2003 Addenda. This edition of the code provides an alternative in section ISTC-5222, Condition Monitoring Program, to the testing requirements of ISTC-3510, ISTC-3520, ISTC-3550 and ISTC-5221. This section specifies that the program shall be implemented in accordance with Appendix II, Check Valve Condition Monitoring Program.

Position

MPS2 will implement a check valve CM program for selected valves or groups of valves in accordance with ISTC-5222 and Appendix II. The following guidelines will be adhered to for administering this program. Additionally, if the Appendix II program is discontinued for a valve or group of valves, then the requirements of ISTC-3510, ISTC-3520, ISTC-3550, and ISTC-3521 shall be implemented.

1. Purpose

   The purpose of the check valve CM program is to improve check valve performance and to optimize testing, examination, and preventive maintenance activities in order to maintain the continued acceptable performance of a select valve or group of valves.

Technical Position TP-02

2. Scope

The MPS2 Check Valve CM program will be applied to individual check valves or groups of check valves which are either candidates for improved performance or candidates whose performance can be optimized.

a. Candidates for improved valve performance are those check valves which may exhibit one or more of the following attributes:

   i. The valve(s) exhibits an unusually high failure rate during IST or operations;

   ii. The valve(s) can not be exercised under normal operating conditions or during shutdown;

   iii. The valve(s) exhibits unusual, abnormal, or unexpected behavior during exercising or operations.

b. Candidates for optimization of testing, examination, and preventive maintenance activities are those check valves with documented acceptable performance that:

   i. Have had their performance improved under this program;

   ii. Cannot be exercised or are not readily exercised during normal operating condition or during shutdown;

   iii. Can only be disassembled and examined; or

   iv. It is decided that all of the associated activities of the valve or group will be optimized.

3. Groupings

For valves that are grouped together, the following valve attributes shall be considered:

a. Manufacturer, design, size, service media, materials of construction, and orientation.

b. Maintenance and modification history.

c. Test history and results.

d. System design shall be considered to determine potential flow instabilities, degree of disassembly, and the need for tolerance and dimensional measurements.

Technical Position TP-02

4. Analysis

An analysis of the test and maintenance history shall be performed to establish the basis for specifying IST, examination, and preventive maintenance activities. This analysis shall include the following:

a. Identify any common failure mode or corrective maintenance patterns.

b. Analyze these common patterns to determine their significance and to identify potential failure mechanisms:

   i. Determine if certain preventive maintenance activities would mitigate the failure or maintenance patterns;

   ii. Determine if certain condition monitoring activities are possible and effective in monitoring for these failure mechanisms;

   iii. Determine if periodic disassembly and examination would be an effective method in monitoring for these failure mechanisms.

   iv. Determine if the valve grouping is required to be changed.

5. Condition Monitoring Activities

a. Performance Improvement Activities

   i. If sufficient information is not available or the results of the analysis performed in 4 above are not conclusive, an interim period not to exceed 2 refueling outages shall be established to determine the cause of the failure or maintenance patterns. The following activities shall be performed at sufficient intervals over the interim period.

      1. Identify interim tests (e.g. non-intrusive) to assess the performance of the valve or group of valves.

      2. Identify interim examinations to evaluate potential degradation mechanisms.

      3. Identify other types of analysis to be performed that will assess check valve condition.

      4. Identify which of these activities will be performed on each valve.

      5. Identify the interval of each activity.

   ii. Complete or revise the CM test plans to document the check valve program performance improvement activities and their associated frequencies.

Technical Position TP-02

iii. Perform these activities at their assigned intervals unit:

1. Sufficient information is obtained to permit an adequate analysis.
2. Until the end of the interim period (two refueling outages or three years, whichever is longer).

iv. After performance, a review shall be performed for each activity to determine if changes to the program are required. If changes are required, the program shall be revised before the next performance of the activity.

b. Optimization of CM Activities

i. If sufficient information is available to assess the performance adequacy of the check valve or group, then the following activities shall be performed:

1. Identify applicable preventive maintenance activities including the intervals that are required to maintain the continued acceptable performance of the check valve or group of check valves.
2. Identify the applicable examination activities including the interval that will be used to periodically assess the condition of each check valve or group of check valves.
3. Identify the applicable test activities including intervals that will be used to periodically verify the acceptable performance of each check valve or group of check valves.
4. Identify which of these activities, including the interval, will be performed on each valve in the group.

ii. Revise the CM plans to document the optimized CM program activities and associated intervals for each activity.

iii. Continue performance of these activities at their associated intervals.

iv. Review the results of the performance of each activity to determine if changes to the optimized CM program are required.

Technical Position TP-02

6. Test Requirements and Frequency

The following requirements apply when implementing the above plans for a single valve or group of valves

a. Valve opening and closing functions must be demonstrated when flow testing or examination methods (non-intrusive, or disassembly and inspection) are used.

b. The initial interval for new tests and associated examinations may not exceed two fuel cycles or three years, whichever is longer.

c. Extension of the initial interval may not exceed one fuel cycle per extension with the maximum interval not to exceed 10 years.

d. Trending and evaluation of existing data must be used to reduce or extend the time interval between tests.

7. Documentation

The CM program shall be documented per the Check Valve Condition Monitoring Administrative Procedure. The plan for each check valve or group of check valves shall be documented in the CM plan and shall contain as a minimum the following information:

a. The list of valves in each group including the group basis.

b. Date the valve or group of valves was evaluated for inclusion or exclusion from the CM program.

c. Safety function of valve or valve group.

d. Analysis/justification which forms the basis for the program.

e. Identification of the failure or maintenance patterns for each valve

f. CM activities including intervals for each valve or valve group.

g. Trending attributes and bases for same.

Technical Position TP-03

Passive Valves Without Test Requirements

Purpose

The purpose of this technical position is to establish the station position for valves that perform a passive safety function; however, no testing in accordance with ISTC is required.

Applicability

This technical position is applicable to valves that perform a passive function in accordance with ISTA-2000 and do not have IST requirements per Table ISTC-3500-1. This position is typical of Category B, passive valves that do not have position indication. An example is a manual valve that must remain in its normal position during an accident, to perform its intended function. Typically, manual valves that perform a safety function are locked in their safety position and administratively controlled by procedures. These valves would be considered passive. If they do not have remote position indicating systems and are categorized as B, they would not be subjected to any test requirements in accordance with Table ISTC-3500-1.

Position

The MPS2 IST Program, Valve Tables - Attachment 4.11, will not list valves which meet the following criteria.

- The valve is Category B (seat leakage in the closed position is inconsequential for fulfillment of the valves' required function(s)) in accordance with ISTC-1300.
- The valve is considered passive (valve maintains obturator position and is not required to change obturator position to accomplish the required function(s)) in accordance with ISTA-2000.
- The valve does not have a remote position indicating system that detects and indicates valve position.

Justification

Valves that meet this position will not be listed in the MPS2 IST Program, Valve Tables - Attachment 4.11. However, the basis for categorization and consideration of active/passive functions shall be documented in the IST Program Basis Document.

Technical Position TP-04

Fail-Safe Testing of Valves

Purpose

The purpose of this technical position is to establish the station position for fail-safe testing of valves in conjunction with stroke time exercising or position indication testing.

Applicability

This technical position is applicable to valves with fail-safe actuators required to be tested in accordance with ISTC-3560.

Background

The ASME OM Code 2001 through 2003 Addenda section ISTC-3560 requires;

> "Valves with fail-safe actuators shall be tested by observing the operation of the actuator upon loss of valve actuating power in accordance with the exercising frequency of ISTC-3510."

Section ISTC-3510 states;

> "Active Category, Category B, and Category C check valves shall be exercised nominally every three months..."

Position

In cases where normal valve operator action moves the valve to the open or closed position by de-energizing the operator electrically, by venting air, or both, the exercise test will satisfy the fail-safe test requirements and an additional test specific for fail-safe testing will not be performed.

MPS2 will also use remote position indication as applicable to verify proper fail-safe operation, provided that the indication system for the valve is periodically verified in accordance with ISTC-3700.

Justification

MPS2 IST program valves that fail open or closed upon loss of actuator power use the fail-safe mechanism to stroke the valve to its safety position. For example, an air-operated valve that fails closed may use air to open the valve against spring force. When the actuator control switch is placed in the closed position, air is vented from the diaphragm and the spring moves the obturator to the closed position.

Technical Position TP-05

Use of ASME Code Case OMN-8

Purpose

The purpose of this technical position is to establish the station position for testing of power-operated control valves that have only a fail-safe safety function.

Applicability

This technical position is applicable to power-operated control valves that have only a fail-safe safety function and are required to be tested in accordance with ISTC-3560.

Background

Code Case OMN-8 is based on the following code inquiry and response:

> *Inquiry:* What alternative requirements to those of ASME/ANSI OMa-1998, Part 10, para. 4.2 through OM Code-1995, ISTC 4.2 may be used for power-operated control valves that have only a fail-safe function?
>
> *Reply:* It is the opinion of the Committee that the requirements of ASME/ANSI OMa-1998, Part 10, para. 4.2.1.4, Power-Operated Valve Stroke Testing; para. 4.2.1.8, Stroke Time Acceptance Criteria; and para. 4.2.1.9(b) need not be met. All other requirements of para. 4.2 shall be met for ASME/ANSI OMa-1988, Part 10.
>
> Further, the requirements of OM Code-1995, ISTC 4.2.4, Power-Operated Valve Stroke Testing; ISTC 4.2.8, Stroke Time Acceptance Criteria; and ISTC 4.2.9(b) need not be met. All other applicable requirements of the paragraph shall be met.
>
> Any abnormality or erratic action experienced during valve exercising shall be recorded in the record of tests, and an evaluation shall be made regarding need for corrective action.

Position

No stroke time testing is required for these valves since this function is excluded from testing based on ASME Code Case OMN-8. The fail-safe function of these valves will be tested in accordance with the ASME OM Code requirements of ISTC-3560.

Justification

ASME OM Code 2001 Edition through 2003 Addenda, Code Case OMN-8, "Alternative Rules for Preservice and Inservice Testing of Power-Operated Valves That Are Used for System Control and Have a Safety Function per OM-10" is approved for use per Regulatory Guide 1.192, OPERATION AND MAINTENANCE CODE CASE ACCEPTABILITY - ASME OM CODE.

Technical Position TP-06

Classification of Skid-Mounted Components

Purpose

The purpose of this technical position is to clarify requirements for classification of various skid-mounted components, and to clarify the testing requirements of these components.

Background

The ASME Code allows classification of some components as skid-mounted when their satisfactory operation is demonstrated by the satisfactory performance of the associated major components. Testing of the major component is sufficient to satisfy IST requirements for skid-mounted components. In section 3.4 of NUREG 1482, the NRC supports the designation of components as skid-mounted:

> "The staff has determined that the testing of the major component is an acceptable means for verifying the operational readiness of the skid-mounted and component subassemblies if the licensee documents this approach in the IST Program. This is acceptable for both code class components and non-code class components tested and tracked by the IST Program."

In the 1996a addenda to the ASME OM Code (endorsed by 10CFR50.55(a) in October 2000), the term skid-mounted was clarified by the addition of ISTA paragraph 1.7:

> ISTA 1.7 Definitions
>
> *Skid-mounted components and component sub assemblies* – components integral to or that support operation of major components, even though these components may not be located directly on the skid. In general, these components are supplied by the manufacturer of the major component. Examples include: diesel skid-mounted fuel oil pumps and valves, steam admission and trip throttle valves for high-pressure coolant injection or auxiliary feedwater turbine-driven pumps, and solenoid-operated valves provided to control the air-operated valve.

Technical Position TP-06

This definition was further clarified in the 2001 Edition of the ASME Code:

ISTA-2000 DEFINITIONS

Skid-mounted pumps and valves: pumps and valves integral to or that support operation of major components, even though these components may not be located directly on the skid. In general, these pumps and valves are supplied by the manufacturer of the major component. Examples include:

(a) diesel fuel oil pumps and valves

(b) steam admission and trip throttle valves for high-pressure coolant injection turbine-driven pumps

(c) steam admission and trip throttle valves for auxiliary feedwater turbine-driven pumps

(d) solenoid-operated valves provided to control an air-operated valve

Additionally the Subsections pertaining to pumps (ISTB) and valves (ISTC) includes exclusions/exemptions for skid-mounted components;

ISTB-1200(c) Exclusions

Skid-mounted pumps that are tested as part of the major component and are justified by the Owner to be adequately tested.

ISTC-1200 Exemptions

Skid-mounted valves are excluded from this subsection provided they are tested as part of the major component and are justified by the Owner to be adequately tested.

Position

The 2001 ASME OM Code definition of skid-mounted should be used for classification of components in the MPS2 IST program. In addition, for a component to be considered skid-mounted:

- The major component associated with the skid-mounted component must be surveillance tested at a frequency sufficient to meet ASME Code test frequency for the skid-mounted component.
- Satisfactory operation of the skid-mounted component must be demonstrated by satisfactory operation of the major component.
- The IST Bases Document should describe the bases for classifying a component as skid-mounted, and the IST program plan should reference this technical position for the component.

Technical Position TP-06

Justification

Classification of components as skid-mounted eliminates the need for testing of sub components that are redundant with testing of major components provided testing of the major components demonstrates satisfactory operation of the "skid-mounted" components.

Technical Position TP-07

Manual Valve Exercise Frequency

Purpose

The purpose of this technical position is to establish the station position for the frequency of exercising those manual valves that are required to be exercised.

Applicability

This technical position is applicable to the manual valves included in the IST program.

Background

The ASME OM Code 2001 through 2003 Addenda section ISTC-3540 states;

> "Manual valves shall be full-stroke exercised at least once every five years, except where adverse conditions[2] may require the valve to be tested more frequently to ensure operational readiness."
>
> [2] Harsh service environment, lubricant hardening, corrosive or sediment-laden process fluid, or degraded valve components are some examples of adverse conditions.

In 10CFR 50.55a(b)(3)(vi), the NRC stated the following with regards to manual valve exercise frequency;

> "Manual valves must be exercised on a 2-year interval rather that the 5-year interval specified in paragraph ISTC-3540 of the 1999 Addenda through the latest edition and addenda incorporated by reference in paragraph (b)(3) of this section, provided that adverse conditions do not require more frequent testing."

Which, as written includes the 2001/2003a of the ASME Code.

Position

MPS2 will perform exercising of manual valves within the scope of the IST program at a frequency not to exceed two years.

Justification

The NRC rule change will be adopted for the frequency of exercising manual valves at least once every two years. This interval is more frequent than required by the edition of the code used by MPS2, therefore no other justification is required.

Technical Position TP-08

Categorization of IST Pumps (Group A or B)

Position

MPS2 has categorized the pumps required to be included in the IST program as either Group A or B in accordance with the requirements of ISTB-1300/2000.

Group A pumps are pumps that are operated continuously or routinely during normal operation, cold shutdown, or refueling operations. The following pumps are categorized as Group A at MPS2:

Pump Number	Class	Group	Function
P-11A	3	A	Reactor Building Closed Cooling Water Pump
P-11B	3	A	Reactor Building Closed Cooling Water Pump
P-11C	3	A	Reactor Building Closed Cooling Water Pump
P-18A	2	A	Coolant Charging Pump
P-18B	2	A	Coolant Charging Pump
P-18C	2	A	Coolant Charging Pump
P-19A	2	A	Boric Acid Pump
P-19B	2	A	Boric Acid Pump
P-42A	2	A	Low Pressure Safety Injection Pump (During Refueling Operations)
P-42B	2	A	Low Pressure Safety Injection Pump (During Refueling Operations)
P-5A	3	A	Service Water Pump
P-5B	3	A	Service Water Pump
P-5C	3	A	Service Water Pump

Group B pumps are those pumps in standby systems that are not operated routinely except for testing. The following pumps are categorized as Group B at MPS2:

Pump Number	Class	Group	Function
P-122A	3	B	Chilled Water Pump
P-122B	3	B	Chilled Water Pump
P-4	3	B	Terry Turbine Auxiliary Feedwater Pump
P-41A	2	B	High Pressure Safety Injection Pump
P-41B	2	B	High Pressure Safety Injection Pump
P-41C	2	B	High Pressure Safety Injection Pump
P-42A	2	B	Low Pressure Safety Injection Pump (During Power Operations)
P-42B	2	B	Low Pressure Safety Injection Pump (During Power Operations)
P-43A	2	B	Containment Spray Pump
P-43B	2	B	Containment Spray Pump
P-9A	3	B	Auxiliary Feedwater Pump
P-9B	3	B	Auxiliary Feedwater Pump

Technical Position TP-08

Group A Pump Tests – Group A tests are performed quarterly for each pump categorized as A. The following IST parameters are measured for each Group A pump test:

- Speed (if pump is variable speed)
- Differential Pressure
- Discharge Pressure, (for positive displacement pumps)
- Flow Rate
- Vibration

Group B Pump Tests - Group B tests are performed quarterly for each pump categorized as B. The following IST parameters are measured for each Group B pump test.

- Speed (if pump is variable speed)
- Differential Pressure[1]
- Flow Rate[1]

[1] For positive displacement pumps, flow rate shall be measured or determined, for all other pumps, differential pressure or flow rate shall be measured or determined.

Comprehensive Pump Tests – Comprehensive pump tests are performed biennially for all pumps in the IST program. The following IST parameters are measured for each Comprehensive pump test:

- Speed (if pump is variable speed)
- Differential Pressure
- Discharge Pressure, (for positive displacement pumps)
- Flow Rate
- Vibration

The following instrument accuracy requirements apply to each test type:

Parameter	Group A	Group B	Comprehensive
Pressure	+/- 2.0%	+/- 2.0%	+/- 0.5%
Flow Rate	+/- 2.0%	+/- 2.0%	+/- 2.0%
Speed	+/- 2.0%	+/- 2.0%	+/- 2.0%
Vibration	+/- 5.0%	+/- 5.0%	+/- 5.0%
Differential Pressure	+/- 2.0%	+/- 2.0%	+/- 0.5%

ATTACHMENT 4.10

INSERVICE TESTING PUMP TABLE

Pump Tag	P&ID	P&ID Coor.	Safety Class	Pump Type	Pump Driver	Category	Test Type	Test Freq.	Relief Request	Tech. Pos.	Notes
Pump Name	**Reactor Building Closed Cooling Water Pump**										
P-11A	25203-26022 Sht 001	H-8	3	C	Motor	A	DPa	Q			
							DPc	2A			
							Qa	Q			
							Qc	2A			
							Va	Q			
							Vc	2A			
Pump Name	**Reactor Building Closed Cooling Water Pump**										
P-11B	25203-26022 Sht 001	F-8	3	C	Motor	A	DPa	Q			
							DPc	2A			
							Qa	Q			
							Qc	2A			
							Va	Q			
							Vc	2A			

Pump Tag	P&ID	P&ID Coor.	Safety Class	Pump Type	Pump Driver	Category	Test Type	Test Freq.	Relief Request	Tech. Pos.	Notes
Pump Name	**Reactor Building Closed Cooling Water Pump**										
P-11C	25203-26022 Sht 001	D-8	3	C	Motor	A	DPa	Q			
							DPc	2A			
							Qa	Q			
							Qc	2A			
							Va	Q			
							Vc	2A			
Pump Name	**Chilled Water Pump**										
P-122A	25203-26027 Sht 002	D-9	3	V	Motor	B	DPb	Q			
							DPc	2A			
							Qb	Q			
							Qc	2A			
							Vc	2A			

Pump Tag	P&ID	P&ID Coor.	Safety Class	Pump Type	Pump Driver	Category	Test Type	Test Freq.	Relief Request	Tech. Pos.	Notes
Pump Name	**Chilled Water Pump**										
P-122B	25203-26027 Sht 002	D-5	3	V	Motor	B	DPb	Q			
							DPc	2A			
							Qb	Q			
							Qc	2A			
							Vc	2A			
Pump Name	**Coolant Charging Pump**										
P-18A	25203-26017 Sht 001	B-7	2	PD	Motor	A	PDa	Q			
							PDc	2A			
							Qa	Q			
							Qc	2A			
							Va	Q			
							Vc	2A			

Pump Tag	P&ID	P&ID Coor.	Safety Class	Pump Type	Pump Driver	Category	Test Type	Test Freq.	Relief Request	Tech. Pos.	Notes
Pump Name	**Coolant Charging Pump**										
P-18B	25203-26017 Sht 001	D-7	2	PD	Motor	A	PDa	Q			
							PDc	2A			
							Qa	Q			
							Qc	2A			
							Va	Q			
							Vc	2A			
Pump Name	**Coolant Charging Pump**										
P-18C	25203-26017 Sht 001	F-7	2	PD	Motor	A	PDa	Q			
							PDc	2A			
							Qa	Q			
							Qc	2A			
							Va	Q			
							Vc	2A			

Pump Tag	P&ID	P&ID Coor.	Safety Class	Pump Type	Pump Driver	Category	Test Type	Test Freq.	Relief Request	Tech. Pos.	Notes
Pump Name	**Boric Acid Pump**										
P-19A	25203-26017 Sht 003	D-6	2	C	Motor	A	DPa	Q			
							DPc	2A			
							Qa	Q			
							Qc	2A			
							Va	Q			
							Vc	2A			
Pump Name	**Boric Acid Pump**										
P-19B	25203-26017 Sht 003	A-6	2	C	Motor	A	DPa	Q			
							DPc	2A			
							Qa	Q			
							Qc	2A			
							Va	Q			
							Vc	2A			

Pump Tag	P&ID	P&ID Coor.	Safety Class	Pump Type	Pump Driver	Category	Test Type	Test Freq.	Relief Request	Tech. Pos.	Notes
Pump Name	**Terry Turbine Auxiliary Feedwater Pump**										
P-4	25203-26005 sht. 003	F-8	3	C	Turbine	B	DPb	Q			
							DPc	2A			
							Nb	Q			
							Nc	2A			
							Qc	2A			
							Vc	2A			
Pump Name	**High Pressure Safety Injection Pump**										
P-41A	25203-26015 Sht 002	J-5	2	C	Motor	B	DPb	Q			
							DPc	2A			
							Qc	2A			
							Vc	2A			

Pump Tag	P&ID	P&ID Coor.	Safety Class	Pump Type	Pump Driver	Category	Test Type	Test Freq.	Relief Request	Tech. Pos.	Notes
Pump Name	**High Pressure Safety Injection Pump**										
P-41B	25203-26015 Sht 002	G-5	2	C	Motor	B	DPb	Q			2
							DPc	2A			
							Qc	2A			
							Vc	2A			
Pump Name	**High Pressure Safety Injection Pump**										
P-41C	25203-26015 Sht 002	F-5	2	C	Motor	B	DPb	Q			
							DPc	2A			
							Qc	2A			
							Vc	2A			

Pump Tag	P&ID	P&ID Coor.	Safety Class	Pump Type	Pump Driver	Category	Test Type	Test Freq.	Relief Request	Tech. Pos.	Notes
Pump Name	**Low Pressure Safety Injection Pump**										
P-42A	25203-26015 Sht 001	C-3	2	V	Motor	A/B	DPa	Q	P-001		During Shutdown Cooling operation
							DPb	Q	P-001		During plant operation
							DPc	2A			
							Qa	Q	P-001		During Shutdown Cooling operation
							Qc	2A			
							Va	Q	P-001		During Shutdown Cooling operation
							Vc	2A			

Pump Tag	P&ID	P&ID Coor.	Safety Class	Pump Type	Pump Driver	Category	Test Type	Test Freq.	Relief Request	Tech. Pos.	Notes
Pump Name	**Low Pressure Safety Injection Pump**										
P-42B	25203-26015 Sht 001	E-3	2	V	Motor	A/B	DPa	Q	P-001		During Shutdown Cooling operation
							DPb	Q	P-001		During plant operation
							DPc	2A			
							Qa	Q	P-001		During Shutdown Cooling operation
							Qc	2A			
							Va	Q	P-001		During Shutdown Cooling operation
							Vc	2A			
Pump Name	**Containment Spray Pump**										
P-43A	26015-1	G-3	2	C	Motor	B	DPb	Q			
							DPc	2A			
							Qc	2A			
							Vc	2A			

Pump Tag	P&ID	P&ID Coor.	Safety Class	Pump Type	Pump Driver	Category	Test Type	Test Freq.	Relief Request	Tech. Pos.	Notes
Pump Name	**Containment Spray Pump**										
P-43B	26015-1	J-3	2	C	Motor	B	DPb	Q			
							DPc	2A			
							Qc	2A			
							Vc	2A			
Pump Name	**Service Water Pump**										
P-5A	25203-26002 Sht. 002	B-11	3	V	Motor	A	DPa	Q			
							DPc	2A			
							Qa	Q			
							Qc	2A			
							Va	Q			
							Vc	2A			

Pump Tag	P&ID	P&ID Coor.	Safety Class	Pump Type	Pump Driver	Category	Test Type	Test Freq.	Relief Request	Tech. Pos.	Notes
Pump Name	**Service Water Pump**										
P-5B	25203-26002 Sht. 002	B-8	3	V	Motor	A	DPa	Q			
							DPc	2A			
							Qa	Q			
							Qc	2A			
							Va	Q			
							Vc	2A			
Pump Name	**Service Water Pump**										
P-5C	25203-26002 Sht. 002	B-6	3	V	Motor	A	DPa	Q			
							DPc	2A			
							Qa	Q			
							Qc	2A			
							Va	Q			
							Vc	2A			

Pump Tag	P&ID	P&ID Coor.	Safety Class	Pump Type	Pump Driver	Category	Test Type	Test Freq.	Relief Request	Tech. Pos.	Notes
Pump Name	**Auxiliary Feedwater Pump**										
P-9A	25203-26005 Sheet 003	B-7	3	C	Motor	B	DPb	Q			
							DPc	2A			
							Qc	2A			
							Vc	2A			
Pump Name	**Auxiliary Feedwater Pump**										
P-9B	25203-26005 Sheet 003	C-7	3	C	Motor	B	DPb	Q			
							DPc	2A			
							Qc	2A			
							Vc	2A			

ATTACHMENT 4.11

INSERVICE TESTING VALVE TABLE

Valve Tag	P&ID	P&ID Coor.	Safety Class	Cat.	Size	Valve Type	Act. Type	Active / Passive	Normal Position	Safety Position	Test Type	Test Freq.	Alt. Freq.	Relief Request	Deferred Just.	Tech. Pos.	Notes
Valve Name	**ILRT Instrument Stop**																
2-AC-112	26028-1	E-12	2	A	1	GL	HA	P	LC	C	LJ	J					
Valve Name	**ILRT Instrument Stop**																
2-AC-114	26028-1	D-12	2	A	1	GL	HA	P	LC	C	LJ	J					
Valve Name	**ILRT Instrument Stop**																
2-AC-116	26028-1	E-12	2	A	1	GL	HA	P	LC	C	LJ	J					
Valve Name	**ILRT Instrument Stop**																
2-AC-117	26028-1	D-12	2	A	1	GL	HA	P	LC	C	LJ	J					
Valve Name	**A Containment Air Monitor Suction Control Valve**																
2-AC-12	26028-2	G-5	2	A	1.5	BF	AO	A	O	O/C	FT	Q					
											LJ	J					
											PI	2A					
											STC	Q					
											STO	Q					

Valve Tag	P&ID	P&ID Coor.	Safety Class	Cat.	Size	Valve Type	Act. Type	Active / Passive	Normal Position	Safety Position	Test Type	Test Freq.	Alt. Freq.	Relief Request	Deferred Just.	Tech. Pos.	Notes
Valve Name	**A Containment Air Monitor Return Control Valve**																
2-AC-15	26028-2	F-5	2	A	1.5	BF	AO	A	C	O/C	FT	Q					
											LJ	J					
											PI	2A					
											STC	Q					
											STO	Q					
Valve Name	**B Containment Air Monitor Return Control Valve**																
2-AC-20	26028-2	K-5	2	A	1.5	BF	AO	A	C	O/C	FT	Q					
											LJ	J					
											PI	2A					
											STC	Q					
											STO	Q					
Valve Name	**Containment Purge Supply Outside Containment Isol Valve**																
2-AC-4	26028-1	E-3	2	A	48	GT	AO	A	LC	C	FT	Q	R		026		
											LJ	J					
											PI	2A					
											STC	Q	R		026		

Valve Tag	P&ID	P&ID Coor.	Safety Class	Cat.	Size	Valve Type	Act. Type	Active / Passive	Normal Position	Safety Position	Test Type	Test Freq.	Alt. Freq.	Relief Request	Deferred Just.	Tech. Pos.	Notes
Valve Name	**B Containment Air Monitor Suction Control Valve**																
2-AC-47	26028-2	J-5	2	A	1.5	BF	AO	A	O	O/C	FT	Q					
											LJ	J					
											PI	2A					
											STC	Q					
											STO	Q					
Valve Name	**Containment Purge Supply Valve Inside Containment Isol Valve**																
2-AC-5	26028-1	E-6	2	A	48	GT	AO	A	LC	C	FT	Q	R		026		
											LJ	J					
											PI	2A					
											STC	Q	R		026		
Valve Name	**Station Air Check Valve to Containment Air Monitoring System**																
2-AC-525	26028-2	F-11	2	C	1	CL	FA	A	C	C	FSC	Q	R		041		
											FSO	Q	R		041		
Valve Name	**Instrument Air Check Valve to Containment Air Monitoring System**																
2-AC-526	26028-2	K-7	2	C	1	CL	FA	A	C	C	FSC	Q	R		041		
											FSO	Q	R		041		

Valve Tag	P&ID	P&ID Coor.	Safety Class	Cat.	Size	Valve Type	Act. Type	Active / Passive	Normal Position	Safety Position	Test Type	Test Freq.	Alt. Freq.	Relief Request	Deferred Just.	Tech. Pos.	Notes
Valve Name	**RM-8262 Supply Isolation**																
2-AC-527	26028-2	J-6	2	B	1	GL	SO	A	O	O/C	FT	Q					
											PI	2A					
											STC	Q					
Valve Name	**RM-8262 Return Isolation**																
2-AC-528	26028-2	K-10	2	B	1	GL	SO	A	O	O/C	FT	Q					
											PI	2A					
											STC	Q					
Valve Name	**RM-8123 Supply Isolation**																
2-AC-529	26028-2	F-6	2	B	1	GL	SO	A	O	O/C	FT	Q					
											PI	2A					
											STC	Q					
Valve Name	**RM-8123 Return Isolation**																
2-AC-530	26028-2	F-11	2	B	1	GL	SO	A	O	O/C	FT	Q					
											PI	2A					
											STC	Q					

Valve Tag	P&ID	P&ID Coor.	Safety Class	Cat.	Size	Valve Type	Act. Type	Active / Passive	Normal Position	Safety Position	Test Type	Test Freq.	Alt. Freq.	Relief Request	Deferred Just.	Tech. Pos.	Notes
Valve Name	**Sample Return From Cabinet "B" Check Valve**																
2-AC-54	26028-2	F-3	2	AC	0.5	CL	FA	A	SYS	O/C	FSC	Q	CM			CM-01	
											FSO	Q	CM			CM-01	
											LJ	J					
Valve Name	**Sample Return From Cabinet "A" Check Valve**																
2-AC-55	26028-2	K-4	2	AC	0.5	CL	FA	A	SYS	O/C	FSC	Q	CM			CM-01	
											FSO	Q	CM			CM-01	
											LJ	J					
Valve Name	**Containment Purge Return Inside Containment Isolation Valve**																
2-AC-6	26028-1	B-11	2	A	48	BF	AO	A	LC	C	FT	Q	R		026		
											LJ	J					
											PI	2A					
											STC	Q	R		026		
Valve Name	**Containment Purge Return Outside Containment Isol Valve**																
2-AC-7	26028-1	B-13	2	A	48	BF	AO	A	LC	C	FT	Q	R		026		
											LJ	J					
											PI	2A					
											STC	Q	R		026		

Valve Tag	P&ID	P&ID Coor.	Safety Class	Cat.	Size	Valve Type	Act. Type	Active / Passive	Normal Position	Safety Position	Test Type	Test Freq.	Alt. Freq.	Relief Request	Deferred Just.	Tech. Pos.	Notes
Valve Name	**Engineered Safeguards Actuation PT-8113 Inst Stop Valve**																
2-AC-96	26028-1	J-12	2	B	0.5	GL	HA	P	O	O	PI	2A					
Valve Name	**Engineered Safeguards Actuation PT-8114 Inst Stop Valve**																
2-AC-97	26028-1	K-10	2	B	0.5	GL	HA	P	O	O	PI	2A					
Valve Name	**Engineered Safeguards Actuation PT-8115 Inst Stop Valve**																
2-AC-98	26028-1	K-5	2	B	0.5	GL	HA	P	O	O	PI	2A					
Valve Name	**Esas Channel "D" PT-8116 & 8117 Ctmt Press Inst Stop Valve**																
2-AC-99	26028-1	J-4	2	B	0.5	GL	HA	P	O	O	PI	2A					
Valve Name	**Letdown Header Outside Ctmt Isolation Valve**																
2-CH-089	26017-2	H-10	2	A	2	GL	AO	A	O	C	FT	Q	CS		023		
											LJ	J					
											PI	2A					
											STC	Q	CS		023		
Valve Name	**Volume Control Tank Header Check Valve**																
2-CH-118	26017-1	G-4	2	C	4	CS	FA	A	SYS	C	FSC	Q	CM			CM-03	
											FSO	Q	CM			CM-03	

Valve Tag	P&ID	P&ID Coor.	Safety Class	Cat.	Size	Valve Type	Act. Type	Active / Passive	Normal Position	Safety Position	Test Type	Test Freq.	Alt. Freq.	Relief Request	Deferred Just.	Tech. Pos.	Notes
Valve Name	**Boric Acid Pump "B" Discharge Check Valve**																
2-CH-154	26017-3	A-8	2	C	3	CS	FA	A	SYS	O/C	FSC	Q					
											FSO	Q					
Valve Name	**Boric Acid Pump "A" Discharge Check Valve**																
2-CH-155	26017-3	D-8	2	C	3	CS	FA	A	SYS	O/C	FSC	Q					
											FSO	Q					
Valve Name	**Boric Acid Emergency Supply Header Check Valve**																
2-CH-177	26017-3	G-8	2	C	3	CS	FA	A	SYS	O/C	FSC	Q	R		003		
											FSO	Q	R		003		
Valve Name	**PMW FCV Discharge To Blend-Tee Check Valve**																
2-CH-184	26017-3	G-11	2	C	3	CS	FA	A	SYS	C	FSC	Q	CM			CM-04A	
											FSO	Q	CM			CM-04A	
Valve Name	**Boric Acid Gravity Feed Header Check Valve**																
2-CH-190	26017-3	C-2	2	C	3	CS	FA	A	SYS	O/C	FSC	Q	R		003		
											FSO	Q	R		003		
Valve Name	**Charging Pumps Refueling Water Storage Tank Suction Check Valve**																
2-CH-191	26017-3	H-11	2	C	3	CS	FA	A	SYS	O/C	FSC	Q	R		022		
											FSO	Q	R		022		

Valve Tag	P&ID	P&ID Coor.	Safety Class	Cat.	Size	Valve Type	Act. Type	Active / Passive	Normal Position	Safety Position	Test Type	Test Freq.	Alt. Freq.	Relief Request	Deferred Just.	Tech. Pos.	Notes
Valve Name	**RWST To Charging Header Isolation Valve**																
2-CH-192	26017-3	H-12	2	B	3	GL	AO	A	C	O/C	FT	2A					
											PI	2A					
											STC	Q					
											STO	Q					
Valve Name	**Boric Acid Blended Make Up RWST Inlet Control Valve**																
2-CH-196	26017-3	G-11	2	B	3	GL	AO	A	C	C	FT	Q					
											PI	2A					
											STC	Q					
Valve Name	**Reactor Coolant Pumps Bleedoff Control Valve Assembly**																
2-CH-198	26017-2	B-10	2	A	0.75	GL	AO	A	O	C	FT	Q	CS		013		
											LJ	J					
											PI	2A					
											STC	Q	CS		013		
Valve Name	**Charging Pump "A" Suction Relief Valve**																
2-CH-315	26017-1	C-5	2	C	0.5	RV	SA	A	C	O/C	SRV	10A					
Valve Name	**Charging Pump "B" Suction Relief Valve**																
2-CH-318	26017-1	E-5	2	C	0.5	RV	SA	A	C	O/C	SRV	10A					

Valve Tag	P&ID	P&ID Coor.	Safety Class	Cat.	Size	Valve Type	Act. Type	Active / Passive	Normal Position	Safety Position	Test Type	Test Freq.	Alt. Freq.	Relief Request	Deferred Just.	Tech. Pos.	Notes
Valve Name	**C Charging Pump Suction Relief Valve**																
2-CH-321	26017-1	G-5	2	C	0.75	RV	SA	A	C	O/C	SRV	10A					
Valve Name	**Charging Pump "C" Discharge Relief Valve**																
2-CH-324	26017-1	G-7	2	C	0.75	RV	SA	A	C	O/C	SRV	10A					
Valve Name	**B Charging Pump Discharge Relief Valve**																
2-CH-325	26017-1	E-7	2	C	0.75	RV	SA	A	C	O/C	SRV	10A					
Valve Name	**Charging Pump "A" Discharge Relief Valve**																
2-CH-326	26017-1	C-7	2	C	0.75	RV	SA	A	C	O/C	SRV	10A					
Valve Name	**Charging Pump "A" Discharge Check Valve**																
2-CH-328	26017-1	B-7	2	C	2	CN	FA	A	SYS	O/C	FSC	Q					
											FSO	Q					
Valve Name	**Charging Pump "B" Discharge Check Valve**																
2-CH-331	26017-1	D-8	2	C	2	CN	FA	A	SYS	O/C	FSC	Q					
											FSO	Q					
Valve Name	**Charging Pump "C" Discharge Check Valve**																
2-CH-334	26017-1	F-7	2	C	2	CN	FA	A	SYS	O/C	FSC	Q					
											FSO	Q					

Valve Tag	P&ID	P&ID Coor.	Safety Class	Cat.	Size	Valve Type	Act. Type	Active / Passive	Normal Position	Safety Position	Test Type	Test Freq.	Alt. Freq.	Relief Request	Deferred Just.	Tech. Pos.	Notes
Valve Name	**Charging Pump Discharge To HPSI Header Valve**																
2-CH-340	26017-1	B-9	2	B	2	GL	HA	A	LC	O/C	FS	2A					
Valve Name	**Charging Header Containment Isolation Valve**																
2-CH-429	26017-1	H-8	2	A	2	GT	MO	A	LO	O/C	LJ	J					
											PI	2A					
											STC	Q	CS		001		
											STO	Q	CS		001		
Valve Name	**Auxiliary Spray Header Non-Return Check Valve**																
2-CH-431	26017-1	F-12	1	C	2	CL	FA	A	SYS	O	FSC	Q	CM			CM-06	
											FSO	Q	CM			CM-06	
Valve Name	**Loop "2A" Charging Header Non-Return Check Valve**																
2-CH-432	26017-1	H-12	1	C	2	CN	FA	A	SYS	O/C	FSC	Q	CS		021		
											FSO	Q	CS		021		
Valve Name	**Loop "1A" Charging Header Non-Return Check Valve**																
2-CH-433	26017-1	J-12	1	C	2	CN	FA	A	SYS	O/C	FSC	Q	CS		021		
											FSO	Q	CS		021		
Valve Name	**Loop Charging Header Relief Isolation Valve**																
2-CH-434	26017-1	J-11	1	A	2	GT	HA	P	LC	C	LJ	J					

Valve Tag	P&ID	P&ID Coor.	Safety Class	Cat.	Size	Valve Type	Act. Type	Active / Passive	Normal Position	Safety Position	Test Type	Test Freq.	Alt. Freq.	Relief Request	Deferred Just.	Tech. Pos.	Notes
Valve Name	**Charging Pump Discharge To HPSI Header Isolation Valve**																
2-CH-440	26017-1	B-9	2	B	2	GL	HA	A	LC	O/C	FS	2A					
Valve Name	**Volume Control Tank To Charging System Outlet Valve**																
2-CH-501	26017-1	G-4	2	B	4	GT	MO	A	O	O/C	PI	2A					
											STC	Q	CS		014		
											STO	Q	CS		014		
Valve Name	**RWST To Charging Pump Suction Valve**																
2-CH-504	26017-3	H-11	2	B	3	GT	MO	A	O	O	PI	2A					
											STO	Q					
Valve Name	**RCP Bleedoff Outside Ctmt Control Valve**																
2-CH-505	26017-2	A-10	2	A	0.75	GL	AO	A	O	C	FT	Q	CS		013		
											LJ	J					
											PI	2A					
											STC	Q	CS		013		

Valve Tag	P&ID	P&ID Coor.	Safety Class	Cat.	Size	Valve Type	Act. Type	Active / Passive	Normal Position	Safety Position	Test Type	Test Freq.	Alt. Freq.	Relief Request	Deferred Just.	Tech. Pos.	Notes
Valve Name	**RCP Control Bleedoff (Inside Ctmt) Valve**																
2-CH-506	26017-2	D-11	2	A	0.75	GL	AO	A	O	C	FT	Q	CS		013		
											LJ	J					
											PI	2A					
											STC	Q	CS		013		
Valve Name	**B Boric Acid Storage Tank Outlet Gravity Feed Valve**																
2-CH-508	26017-3	D-2	2	B	3	GT	MO	A	C	O	PI	2A					
											STO	Q					
Valve Name	**A Boric Acid Storage Tank Outlet Gravity Feed Valve**																
2-CH-509	26017-3	D-3	2	B	3	GT	MO	A	C	O	PI	2A					
											STO	Q					
Valve Name	**Boric Acid Pump "A" Max. Recirculation Isolation Valve**																
2-CH-510	26017-3	D-7	2	B	1	GL	AO	A	O	C	FT	Q					
											PI	2A					
											STC	Q					

Valve Tag	P&ID	P&ID Coor.	Safety Class	Cat.	Size	Valve Type	Act. Type	Active / Passive	Normal Position	Safety Position	Test Type	Test Freq.	Alt. Freq.	Relief Request	Deferred Just.	Tech. Pos.	Notes
Valve Name	**Boric Acid Pump "B" Max. Recirculation Isolation**																
2-CH-511	26017-3	B-7	2	B	1	GL	AO	A	O	C	FT	Q					
											PI	2A					
											STC	Q					
Valve Name	**Volume Control Tank Makeup Control Valve**																
2-CH-512	26017-3	J-10	2	B	3	BF	AO	A	O	C	FT	Q					
											PI	2A					
											STC	Q					
Valve Name	**Letdown Header SIAS Isolation Valve**																
2-CH-515	26017-2	G-13	1	A	3	GL	AO	A	O	C	FT	Q	CS		015		
											LJ	J					
											PI	2A					
											STC	Q	CS		015		
Valve Name	**Letdown Header CIAS Containment Isolation Valve**																
2-CH-516	26017-2	G-12	1	A	3	GL	AO	A	O	C	FT	Q	CS		015		
											LJ	J					
											PI	2A					
											STC	Q	CS		015		

Valve Tag	P&ID	P&ID Coor.	Safety Class	Cat.	Size	Valve Type	Act. Type	Active / Passive	Normal Position	Safety Position	Test Type	Test Freq.	Alt. Freq.	Relief Request	Deferred Just.	Tech. Pos.	Notes
Valve Name	**Auxiliary Spray Charging Header Supply Valve**																
2-CH-517	26017-1	F-12	1	A	2	GL	AO	A	C	O/C	FT	Q	CS		016		
											LJ	J					
											PI	2A					
											STC	Q	CS		016		
											STO	Q	CS		016		
Valve Name	**Loop "2A" Charging Header Supply Valve**																
2-CH-518	26017-1	H-12	1	A	2	GL	AO	A	LO	O/C	FT	Q	CS		005		
											LJ	J					
											PI	2A					
											STC	Q	CS		005		
											STO	Q	CS		005		
Valve Name	**Loop "1A" Charging Header Supply Valve**																
2-CH-519	26017-1	J-11	1	A	2	GL	AO	A	LO	O/C	FT	Q	CS		005		
											LJ	J					
											PI	2A					
											STC	Q	CS		005		
											STO	Q	CS		005		

Valve Tag	P&ID	P&ID Coor.	Safety Class	Cat.	Size	Valve Type	Act. Type	Active / Passive	Normal Position	Safety Position	Test Type	Test Freq.	Alt. Freq.	Relief Request	Deferred Just.	Tech. Pos.	Notes
Valve Name	**Hydrazine Supply Check Valve**																
2-CH-769	26031-1	F-2	2	C	0.5	CL	FA	A	SYS	C	FSC	Q	CM			CM-08	
											FSO	Q	CM			CM-08	
Valve Name	**Charging Header Relief Valve**																
2-CH-986	26017-1	H-8	2	AC	0.75	SV	SA	A	C	O/C	LJ	J					
											SRV	10A					
Valve Name	**A Chill Water Pump Discharge Check Valve**																
2-CHW-1	26027-2	C-9	3	C	2	CS	FA	A	SYS	O	FSC	Q	CM			CM-09	
											FSO	Q	CM			CM-09	
Valve Name	**Chilled Water Supply Header Cross Tie Control Valve**																
2-CHW-11	26027-2	F-7	3	B	1.5	GL	AO	A	O	C	FT	Q					
											PI	2A					
											STC	Q					
Valve Name	**Chilled Water Supply Header Cross Tie Control Valve**																
2-CHW-12	26027-2	F-5	3	B	1.5	GL	AO	A	O	C	FT	Q					
											PI	2A					
											STC	Q					

Valve Tag	P&ID	P&ID Coor.	Safety Class	Cat.	Size	Valve Type	Act. Type	Active / Passive	Normal Position	Safety Position	Test Type	Test Freq.	Alt. Freq.	Relief Request	Deferred Just.	Tech. Pos.	Notes
Valve Name	**Chill Water Return Header Cross Tie Control Valve**																
2-CHW-13	26027-2	H-7	3	B	1.5	GL	AO	A	O	C	FT	Q					
											PI	2A					
											STC	Q					
Valve Name	**Chill Water Return Header Cross Tie Control Valve**																
2-CHW-14	26027-2	H-5	3	B	1.5	GL	AO	A	O	C	FT	Q					
											PI	2A					
											STC	Q					
Valve Name	**Chilled Water X84A Supply Control Valve**																
2-CHW-3	26027-2	F-8	3	B	2	GL	AO	A	C	O	FT	Q					
											PI	2A					
											STO	Q					
Valve Name	**B Chill Water Pump Discharge Check Valve**																
2-CHW-31	26027-2	C-5	3	C	2	CS	FA	A	SYS	O	FSC	Q	CM			CM-09	
											FSO	Q	CM			CM-09	

Valve Tag	P&ID	P&ID Coor.	Safety Class	Cat.	Size	Valve Type	Act. Type	Active / Passive	Normal Position	Safety Position	Test Type	Test Freq.	Alt. Freq.	Relief Request	Deferred Just.	Tech. Pos.	Notes
Valve Name	**Chilled Water X84B Supply Control Valve**																
2-CHW-33	26027-2	F-4	3	B	2	GL	AO	A	C	O	FT	Q					
											PI	2A					
											STO	Q					
Valve Name	**A Aux Feed Pump Suction Isolation**																
2-CN-29A	26005-3	C-5	3	B	6.0	GT	HA	A	O	O/C	FS	2A					
Valve Name	**B Aux Feed Pump Suction Isolation**																
2-CN-29B	26005-3	B-5	3	B	6.0	GT	HA	A	O	O/C	FS	2A					
Valve Name	**Turbine Aux Feed Pump Suction Isolation Valve**																
2-CN-30	26005-3	E-6	3	B	8	GT	HA	A	O	O/C	FS	2A					
Valve Name	**Condensate Makeup Line Relief Valve**																
2-CN-587	26005-3	F-7	3	C	1.5	RV	SA	A	C	O/C	SRV	10A					
Valve Name	**"B" Containment Spray Header To Recirculation Header Valve**																
2-CS-050	26015-3	K-3	2	A	1	GT	HA	P	C	C	LT	2A	A/R	V-001			2-SI-459 is normally tested valve in this path. Alternative test.
Valve Name	**"A" Containment Spray Header To Recirculation Header Valve**																
2-CS-051	26015-3	K-3	2	A	1	GT	HA	P	C	C	LT	2A	A/R	V-001			2-SI-459 is normally tested valve in this path. Alternative test.

Valve Tag	P&ID	P&ID Coor.	Safety Class	Cat.	Size	Valve Type	Act. Type	Active / Passive	Normal Position	Safety Position	Test Type	Test Freq.	Alt. Freq.	Relief Request	Deferred Just.	Tech. Pos.	Notes
Valve Name	**"A" RWST Outlet Header Isolation Valve**																
2-CS-13.1A	26015-2	B-9	2	B	18	GT	MO	A	LO	O/C	PI	2A					
											STC	Q	CS		037		
Valve Name	**"B" RWST Outlet Header Isolation Valve**																
2-CS-13.1B	26015-2	B-9	2	B	18	GT	MO	A	LO	O/C	PI	2A					
											STC	Q	CS		037		
Valve Name	**2-CS-16.1A Bonnet Expansion Volume Check Valve**																
2-CS-140	26015-2	H-2	2	C	0.75	CL	SA	A	SYS	O/C	FSC	Q	R		032		
											FSO	Q	R		032		
Valve Name	**2-CS-16.1B Bonnet Expansion Volume Check Valve**																
2-CS-141	26015-2	H-2	2	C	0.75	CL	SA	A	SYS	O/C	FSC	Q	R		032		
											FSO	Q	R		032		
Valve Name	**"A" RWST Outlet Header Check Valve**																
2-CS-14A	26015-2	B-10	2	AC	18	CS	SA	A	SYS	O/C	FS	Q	R		024		D&I FS on sampling plan
											LT	2A	OR	V-001			Leak test every other refueling per V-001

Valve Tag	P&ID	P&ID Coor.	Safety Class	Cat.	Size	Valve Type	Act. Type	Active / Passive	Normal Position	Safety Position	Test Type	Test Freq.	Alt. Freq.	Relief Request	Deferred Just.	Tech. Pos.	Notes
Valve Name	**"B" RWST Outlet Header Check Valve**																
2-CS-14B	26015-2	A-9	2	AC	18	CS	SA	A	SYS	O/C	FS	Q	R		024		D&I FS on sampling plan
											LT	2A	OR	V-001			Leak test every other refueling per V-001
Valve Name	**"A" Containment Sump Outlet Header Check Valve**																
2-CS-15A	26015-2	B-11	2	C	24	CS	SA	A	SYS	O	FS	Q	CM			CM-14	
Valve Name	**"B" Containment Sump Outlet Header Check Valve**																
2-CS-15B	26015-2	A-10	2	C	24	CS	SA	A	SYS	O	FS	Q	CM			CM-14	
Valve Name	**"A" Containment Sump Outlet Header Isolation**																
2-CS-16.1A	26015-2	B-11	2	A	24	GT	MO	A	C	O/C	LT	2A					
											PI	2A					
											STC	Q	CS		038		
											STO	Q	CS		038		
Valve Name	**"B" Containment Sump Outlet Header Isolation**																
2-CS-16.1B	26015-2	B-11	2	A	24	GT	MO	A	C	O/C	LT	2A					
											PI	2A					
											STC	Q	CS		038		
											STO	Q	CS		038		

Valve Tag	P&ID	P&ID Coor.	Safety Class	Cat.	Size	Valve Type	Act. Type	Active / Passive	Normal Position	Safety Position	Test Type	Test Freq.	Alt. Freq.	Relief Request	Deferred Just.	Tech. Pos.	Notes
Valve Name	**Containment Spray (+ 20' Elevation) Supply Header Check To RWST**																
2-CS-26	26015-2	D-5	NA	C	6	CS	SA	A	SYS	O	FSC	Q	CM			CM-15	
											FSO	Q	CM			CM-15	
Valve Name	**"A" Containment Spray Pump Discharge Check Valve**																
2-CS-2A	26015-1	J-5	2	C	8	CS	SA	A	SYS	O	FSC	Q	CM			CM-10	
											FSO	Q	CM			CM-10	
Valve Name	**"B" Containment Spray Pump Discharge Check Valve**																
2-CS-2B	26015-1	G-5	2	C	8	CS	SA	A	SYS	O	FSC	Q	CM			CM-10	
											FSO	Q	CM			CM-10	
Valve Name	**"A" Containment Spray Header Isolation Valve Pen #4**																
2-CS-4.1A	26015-1	J-11	2	A	8	GT	MO	A	C	O/C	LJ	J					
											PI	2A					
											STC	Q					
											STO	Q					

Valve Tag	P&ID	P&ID Coor.	Safety Class	Cat.	Size	Valve Type	Act. Type	Active / Passive	Normal Position	Safety Position	Test Type	Test Freq.	Alt. Freq.	Relief Request	Deferred Just.	Tech. Pos.	Notes
Valve Name	**"B" Containment Spray Header Isolation Valve Pen #5**																
2-CS-4.1B	26015-1	H-11	2	A	8	GT	MO	A	C	O/C	LJ	J					
											PI	2A					
											STC	Q					
											STO	Q					
Valve Name	**Ctmt Spray Containment Side "A" Header Check Valve**																
2-CS-5A	26015-1	J-12	2	AC	8	CS	SA	A	SYS	O/C	FSC	Q	CM			CM-11	
											FSO	Q	CM			CM-11	
											LJ	J					
Valve Name	**Ctmt Spray Containment Side "B" Header Check Valve**																
2-CS-5B	26015-1	G-12	2	AC	8	CS	SA	A	SYS	O/C	FSC	Q	CM			CM-11	
											FSO	Q	CM			CM-11	
											LJ	J					
Valve Name	**"A" Containment Spray Pump Minimum Flow Check Valve**																
2-CS-6A	26015-1	H-5	2	C	2	CL	SA	A	SYS	O	FSC	Q	CM			CM-12	
											FSO	Q	CM			CM-12	

Valve Tag	P&ID	P&ID Coor.	Safety Class	Cat.	Size	Valve Type	Act. Type	Active / Passive	Normal Position	Safety Position	Test Type	Test Freq.	Alt. Freq.	Relief Request	Deferred Just.	Tech. Pos.	Notes
Valve Name	**"B" Containment Spray Pump Minimum Flow Check Valve**																
2-CS-6B	26015-1	G-5	2	C	2	CL	SA	A	SYS	O	FSC	Q	CM			CM-12	
											FSO	Q	CM			CM-12	
Valve Name	**Hydrogen Purge Isolation Valve (Inside Containment)**																
2-EB-100	26028-3	G-5	2	A	6.0	BF	AO	A	C	O/C	FT	Q	CS		031		
											LJ	J					
											PI	2A					
											STC	Q					
											STO	Q					
Valve Name	**RCS Vent To EBFS Pen #82**																
2-EB-86	26028-3	E-4	2	A	0.75	GT	HA	P	LC	C	LJ	J					
Valve Name	**B Containment Air Monitor Isolation Control Valve**																
2-EB-88	26028-2	G-3	2	A	1.5	BF	AO	A	C	O/C	FT	Q					
											LJ	J					
											PI	2A					
											STC	Q					
											STO	Q					

Valve Tag	P&ID	P&ID Coor.	Safety Class	Cat.	Size	Valve Type	Act. Type	Active / Passive	Normal Position	Safety Position	Test Type	Test Freq.	Alt. Freq.	Relief Request	Deferred Just.	Tech. Pos.	Notes
Valve Name	**A Containment Air Monitor Isolation Control Valve**																
2-EB-89	26028-2	J-3	2	A	1.5	BF	AO	A	C	O/C	FT	Q					
											LJ	J					
											PI	2A					
											STC	Q					
											STO	Q					
Valve Name	**Hydrogen Purge Isolation Control Valve (Inside Containment)**																
2-EB-91	26028-3	F-5	2	A	6.0	BF	AO	A	C	O/C	FT	Q	CS		031		
											LJ	J					
											PI	2A					
											STC	Q					
											STO	Q					
Valve Name	**Hydrogen Purge Isolation Control Valve (Outside Containment)**																
2-EB-92	26028-3	F-2	2	A	6	BF	AO	A	C	O/C	FT	Q					
											LJ	J					
											PI	2A					
											STC	Q					
											STO	Q					

Valve Tag	P&ID	P&ID Coor.	Safety Class	Cat.	Size	Valve Type	Act. Type	Active / Passive	Normal Position	Safety Position	Test Type	Test Freq.	Alt. Freq.	Relief Request	Deferred Just.	Tech. Pos.	Notes
Valve Name	**Hydrogen Purge Isolation Control Valve (Outside Containment)**																
2-EB-99	26028-3	G-2	2	A	6	BF	AO	A	C	O/C	FT	Q					
											LJ	J					
											PI	2A					
											STC	Q					
											STO	Q					
Valve Name	**Fire Protection Containment Supply Isolation Valve**																
2-FIRE-108	26011-1	G-8	2	A	6	BF	HA	P	LC	C	LJ	J					
Valve Name	**Containment Fire Protection System Water Supply Check Valve**																
2-FIRE-109	26011-1	G-8	2	AC	6.0	CH	SA	P	SYS	C	LJ	J					
Valve Name	**Fire Header Supply Stop Valve To Auxiliary Feedwater Pump Valve**																
2-FIRE-34	26011-1	E-10	NA	B	8	GT	HA	A	C	O/C	FS	2A					
Valve Name	**A Aux Feed Pump Emergency Fire Water Supply Valve**																
2-FIRE-94A	26011-1	D-10	NA	B	6	GT	HA	A	C	O/C	FS	2A	ER	V-002			One valve cycled each refueling on sampling plan per V-002
Valve Name	**B Aux Feed Pump Emergency Fire Water Supply Valve**																
2-FIRE-94B	26011-1	D-10	NA	B	6	GT	HA	A	C	O/C	FS	2A	ER	V-002			One valve cycled each refueling on sampling plan per V-002

Valve Tag	P&ID	P&ID Coor.	Safety Class	Cat.	Size	Valve Type	Act. Type	Active / Passive	Normal Position	Safety Position	Test Type	Test Freq.	Alt. Freq.	Relief Request	Deferred Just.	Tech. Pos.	Notes
Valve Name	**Turbine Aux Feed Pump Emergency Fire Water Supply Valve**																
2-FIRE-94C	26011-1	D-10	NA	B	8	GT	HA	A	C	O/C	FS	2A	ER	V-002			One valve cycled each refueling on sampling plan per V-002
Valve Name	**#1 S/G Aux Feed Supply Air-Assist Check Valve**																
2-FW-12A	26005-2	D-9	2	C	6.0	CS	FA	A	SYS	O/C	FSC	Q	CS		011		
											FSO	Q	CS		011		
Valve Name	**#2 S/G Aux Feed Supply Air-Assist Check Valve**																
2-FW-12B	26005-2	D-2	2	C	6.0	CS	FA	A	SYS	O/C	FSC	Q	CS		011		
											FSO	Q	CS		011		
Valve Name	**Auxiliary Feedwater Pump 'A' Recirc Check Valve**																
2-FW-32A	26005-3	D-9	3	C	1	CL	FA	A	SYS	O	FSC	Q	CM			CM-24	
											FSO	Q	CM			CM-24	
Valve Name	**Auxiliary Feedwater Pump 'B' Recirculation Check Valve**																
2-FW-32B	26005-3	B-9	3	C	1	CL	FA	A	SYS	O	FSC	Q	CM			CM-24	
											FSO	Q	CM			CM-24	
Valve Name	**Turbine Auxiliary Fedwater Pump Recirc Check Valve**																
2-FW-33	26005-3	E-9	3	C	1.5	CL	FA	A	SYS	O	FSC	Q	CM			CM-25	
											FSO	Q	CM			CM-25	

Valve Tag	P&ID	P&ID Coor.	Safety Class	Cat.	Size	Valve Type	Act. Type	Active / Passive	Normal Position	Safety Position	Test Type	Test Freq.	Alt. Freq.	Relief Request	Deferred Just.	Tech. Pos.	Notes
Valve Name	**#1 Steam Generator Aux Feedwater Regulating Valve**																
2-FW-43A	26005-3	C-12	3	B	4.0	GL	AO	A	C	O	FT	Q					
											PI	2A					
Valve Name	**#2 Steam Generator Aux Feedwater Regulating Valve**																
2-FW-43B	26005-3	E-12	3	B	4.0	GL	AO	A	C	O	FT	Q					
											PI	2A					
Valve Name	**Aux Feedwater Pump Discharge Header Cross-Tie Valve**																
2-FW-44	26005-3	D-12	3	B	6	GT	MO	A	O	O/C	PI	2A					
											STC	Q	CS		034		
											STO	Q	CS		034		
Valve Name	**Aux Feedwater Supply To Spent Fuel Pool System Valve**																
2-FW-54	26005-3	D-10	3	B	2	GT	HA	A	LC	O/C	FS	2A					
Valve Name	**#1 S/G Aux Feed Reg Valve By-Pass**																
2-FW-56A	26005-3	C-12	3	B	6.0	GL	HA	A	C	O/C	FS	2A					
Valve Name	**#2 S/G Aux Feed Reg Valve By-Pass**																
2-FW-56B	26005-3	E-12	3	B	6.0	GL	HA	A	C	O/C	FS	2A					

Valve Tag	P&ID	P&ID Coor.	Safety Class	Cat.	Size	Valve Type	Act. Type	Active / Passive	Normal Position	Safety Position	Test Type	Test Freq.	Alt. Freq.	Relief Request	Deferred Just.	Tech. Pos.	Notes
Valve Name	**#1 S/G Main Feed Supply Air-Assist Check Valve**																
2-FW-5A	26005-2	E-8	2	C	18	CS	AO/FA	A	O	C	FSC	Q	CM			CM-20	
											FSO	Q	CM			CM-20	
											PI	2A					
Valve Name	**#2 S/G Main Feed Supply Air-Assist Check Valve**																
2-FW-5B	26005-2	E-3	2	C	18	CS	AO/FA	A	O	C	FSC	Q	CM			CM-20	
											FSO	Q	CM			CM-20	
											PI	2A					
Valve Name	**Turbine Auxiliary Feedwater Pump Discharge Check Valve**																
2-FW-7	26005-3	F-9	3	C	6	CT	FA	A	SYS	O/C	FSC	Q	CS		010		
											FSO	Q	CS		010		
Valve Name	**Auxiliary Feedwater Pump "A" Discharge Check Valve**																
2-FW-8A	26005-3	C-9	3	C	4	CT	FA	A	SYS	O/C	FSC	Q	CS		010		
											FSO	Q	CS		010		
Valve Name	**Auxiliary Feedwater Pump "B" Discharge Check Valve**																
2-FW-8B	26005-3	C-9	3	C	4	CT	FA	A	SYS	O/C	FSC	Q	CS		010		
											FSO	Q	CS		010		

Valve Tag	P&ID	P&ID Coor.	Safety Class	Cat.	Size	Valve Type	Act. Type	Active / Passive	Normal Position	Safety Position	Test Type	Test Freq.	Alt. Freq.	Relief Request	Deferred Just.	Tech. Pos.	Notes
Valve Name	**Primary Drain Tank & Quench Tank Vent Header Isolation Valve**																
2-GR-11.1	26021-2	D-5	2	A	3	GL	AO	A	C	C	FT	Q					
											LJ	J					
											PI	2A					
											STC	Q					
Valve Name	**Primary Drain Tank & Quench Tank Vent Header Isolation Valve**																
2-GR-11.2	26021-2	D-5	2	A	3	GL	AO	A	C	C	FT	Q					
											LJ	J					
											PI	2A					
											STC	Q					
Valve Name	**X169A Refrigerant SIAS Control Valve**																
2-HV-509	26027-2	C-8	NA	B	0.75	GL	SO	A	O	O	FSO	A/R				TP-06	Skid mounted component verified by normal operation
Valve Name	**X169B Refrigerant SIAS Control Valve**																
2-HV-510	26027-2	C-3	NA	B	0.75	GL	SO	A	O	O	FSO	A/R				TP-06	Skid mounted component verified by normal operation

Valve Tag	P&ID	P&ID Coor.	Safety Class	Cat.	Size	Valve Type	Act. Type	Active / Passive	Normal Position	Safety Position	Test Type	Test Freq.	Alt. Freq.	Relief Request	Deferred Just.	Tech. Pos.	Notes
Valve Name	**Containment Structure Instrument Air Control Valve**																
2-IA-27.1	26009-6	G-7	2	A	2	GL	AO	A	O	C	FT	Q					
											LJ	J					
											PI	2A					
											STC	Q					
Valve Name	**Instrument Air Containment Penetration Check Valve**																
2-IA-43	26009-8	F-12	2	AC	2	CL	FA	A	SYS	C	FSC	Q	CM			CM-26	
											FSO	Q	CM			CM-26	
											LJ	J					
Valve Name	**Backup Air To Header Isolation For 2-CH-517,**																
2-IA-566	26009-6	F-6	2	A	2	GL	HA	A	LC	O/C	FS	2A					
											LJ	J					
Valve Name	**Backup Air Chk Valve To Chg Hdr Out Isolations 2-CH-517,518,519**																
2-IA-569	26009-6	F-6	2	AC	1	CH	SA	A	SYS	O/C	FSC	Q	CM			CM-27	
											FSO	Q	CM			CM-27	
											LJ	J					

Valve Tag	P&ID	P&ID Coor.	Safety Class	Cat.	Size	Valve Type	Act. Type	Active / Passive	Normal Position	Safety Position	Test Type	Test Freq.	Alt. Freq.	Relief Request	Deferred Just.	Tech. Pos.	Notes
Valve Name	**Primary Drain Tank Isolation Valve (Inside Containment)**																
2-LRR-43.1	26020-5	E-3	2	A	3.0	GL	AO	A	C	C	FT	Q					
											LJ	J					
											PI	2A					
											STC	Q					
Valve Name	**Primary Drain Tank Isolation Valve (Outside Containment)**																
2-LRR-43.2	26020-5	G-3	2	A	3.0	GL	AO	A	C	C	FT	Q					
											LJ	J					
											PI	2A					
											STC	Q					
Valve Name	**Quench Tank To PDT & Quench Tank Cooler Valve**																
2-LRR-57.1	26020-5	A-7	3	B	3	GL	AO	P	C	C	PI	2A					
Valve Name	**Pdt & Quench Tank Cooler Sample Valve**																
2-LRR-61.1	26020-5	E-10	2	A	0.5	GL	AO	A	C	C	FT	Q					
											LJ	J					
											PI	2A					
											STC	Q					

Valve Tag	P&ID	P&ID Coor.	Safety Class	Cat.	Size	Valve Type	Act. Type	Active / Passive	Normal Position	Safety Position	Test Type	Test Freq.	Alt. Freq.	Relief Request	Deferred Just.	Tech. Pos.	Notes
Valve Name	**#1 Steam Generator Atmospheric Dump Control Valve**																
2-MS-190A	26002-1	H-4	2	B	8	GL	AO	A	C	O/C	FS	Q	CS		036		
											FT	Q	CS		036		
Valve Name	**#2 Steam Generator Atmospheric Dump Control Valve**																
2-MS-190B	26002-1	C-6	2	B	8	GL	AO	A	C	O/C	FS	Q	CS		036		
											FT	Q	CS		036		
Valve Name	**#1 Steam Generator Blowdown Sample Control Valve**																
2-MS-191A	26002-2	E-10	2	B	0.5	GL	AO	A	O	C	FT	Q					
											PI	2A					
											STC	Q					
Valve Name	**#2 Steam Generator Blowdown Sample Control Valve**																
2-MS-191B	26002-2	E-12	2	B	0.5	GL	AO	A	O	C	FT	Q					
											LJ	J					
											PI	2A					
											STC	Q					
Valve Name	**Steam Generator MSIV Non-Return Check Valve**																
2-MS-1A	26002-1	J-7	N/A	C	34	CS	SA	A	SYS	C	FSC	Q	CM			CM-28	
											FSO	Q	CM			CM-28	

Valve Tag	P&ID	P&ID Coor.	Safety Class	Cat.	Size	Valve Type	Act. Type	Active / Passive	Normal Position	Safety Position	Test Type	Test Freq.	Alt. Freq.	Relief Request	Deferred Just.	Tech. Pos.	Notes
Valve Name	**Steam Generator MSIV Non-Return Check Valve**																
2-MS-1B	26002-1	D-10	N/A	C	34	CS	SA	A	SYS	C	FSC	Q	CM			CM-28	
											FSO	Q	CM			CM-28	
Valve Name	**#1 S/G Supply to Aux Feed Water Turbine Steam Supply Valve**																
2-MS-201	26002-1	J-4	2	B	4	GT	MO	A	O	O/C	PI	2A					
											STC	Q					
											STO	Q					
Valve Name	**#2 S/G Supply to Aux Feed Water Turbine Steam Supply Valve**																
2-MS-202	26002-1	E-7	2	B	4	GT	MO	A	O	O/C	PI	2A					
											STC	Q					
											STO	Q					
Valve Name	**#1 S/G Blowdown Control Valve**																
2-MS-220A	26002-2	G-9	2	A	2	GL	AO	A	O	C	FT	Q					
											PI	2A					
											STC	Q					

Valve Tag	P&ID	P&ID Coor.	Safety Class	Cat.	Size	Valve Type	Act. Type	Active / Passive	Normal Position	Safety Position	Test Type	Test Freq.	Alt. Freq.	Relief Request	Deferred Just.	Tech. Pos.	Notes
Valve Name	**#2 S/G Blowdown Control Valve**																
2-MS-220B	26002-2	E-11	2	A	2	GL	AO	A	O	C	FT	Q					
											PI	2A					
											STC	Q					
Valve Name	**#2 Steam Generator Safety Relief Valve**																
2-MS-239	26002-1	E-8	2	C	6	SV	SA	A	C	O	SRV	5A					
Valve Name	**#2 Steam Generator Safety Relief Valve**																
2-MS-240	26002-1	E-8	2	C	6	SV	SA	N/A	C	O	SRV	5A					
Valve Name	**#2 Steam Generator Safety Relief Valve**																
2-MS-241	26002-1	E-8	2	C	6	SV	SA	A	C	O	SRV	5A					
Valve Name	**#2 Steam Generator Safety Relief Valve**																
2-MS-242	26002-1	E-9	2	C	6	SV	SA	A	C	O	SRV	5A					
Valve Name	**#2 Steam Generator Safety Relief Valve**																
2-MS-243	26002-1	D-9	2	C	6	SV	SA	A	C	O	SRV	5A					
Valve Name	**#2 Steam Generator Safety Relief Valve**																
2-MS-244	26002-1	D-9	2	C	6	SV	SA	A	C	O	SRV	5A					

Valve Tag	P&ID	P&ID Coor.	Safety Class	Cat.	Size	Valve Type	Act. Type	Active / Passive	Normal Position	Safety Position	Test Type	Test Freq.	Alt. Freq.	Relief Request	Deferred Just.	Tech. Pos.	Notes
Valve Name	#2 Steam Generator Safety Relief Valve																
2-MS-245	26002-1	D-8	2	C	6	SV	SA	A	C	O	SRV	5A					
Valve Name	#2 Steam Generator Safety Relief Valve																
2-MS-246	26002-1	D-8	2	C	6	RV	SA	A	C	O/C	SRV	5A					
Valve Name	#1 Steam Generator Safety Relief Valve																
2-MS-247	26002-1	J-5	2	C	6	RV	SA	A	C	O/C	SRV	5A					
Valve Name	#1 Steam Generator Safety Relief Valve																
2-MS-248	26002-1	J-5	2	C	6	SV	SA	A	C	O	SRV	5A					
Valve Name	#1 Steam Generator Safety Relief Valve																
2-MS-249	26002-1	J-5	2	C	6	SV	SA	A	C	O	SRV	5A					
Valve Name	#1 Steam Generator Safety Relief Valve																
2-MS-250	26002-1	J-5	2	C	6	SV	SA	N/A	C	O	SRV	5A					
Valve Name	#1 Steam Generator Safety Relief Valve																
2-MS-251	26002-1	J-6	2	C	6	SV	SA	A	C	O	SRV	5A					
Valve Name	#1 Steam Generator Safety Relief Valve																
2-MS-252	26002-1	J-6	2	C	6	SV	SA	A	C	O	SRV	5A					

Valve Tag	P&ID	P&ID Coor.	Safety Class	Cat.	Size	Valve Type	Act. Type	Active / Passive	Normal Position	Safety Position	Test Type	Test Freq.	Alt. Freq.	Relief Request	Deferred Just.	Tech. Pos.	Notes
Valve Name	**#1 Steam Generator Safety Relief Valve**																
2-MS-253	26002-1	J-6	2	C	6	SV	SA	A	C	O	SRV	5A					
Valve Name	**#1 Steam Generator Safety Relief Valve**																
2-MS-254	26002-1	J-6	2	C	6	SV	SA	A	C	O	SRV	5A					
Valve Name	**#1 S/G Header Drain Control Valve**																
2-MS-265B	26002-1	H-5	2	B	1	GL	AO	A	O	C	FT	Q					
											PI	2A					
											STC	Q					
											STO	Q					
Valve Name	**#2 S/G Header Drain Control Valve**																
2-MS-266B	26002-1	C-8	2	B	1	GL	AO	A	O	C	FT	Q					
											PI	2A					
											STC	Q					
											STO	Q					
Valve Name	**Terry Turbine Trip Throttle Valve**																
2-MS-464	26002-1	J-10	3	B	4	GL	MO	A	C	O	PI	2A					
											STO	Q					

Valve Tag	P&ID	P&ID Coor.	Safety Class	Cat.	Size	Valve Type	Act. Type	Active / Passive	Normal Position	Safety Position	Test Type	Test Freq.	Alt. Freq.	Relief Request	Deferred Just.	Tech. Pos.	Notes
Valve Name	**Auxiliary Feedwater Turbine Supply Check Valve**																
2-MS-4A	26002-1	K-5	N/A	C	4	CS	SA	A	SYS	O/C	FSC	Q	CS		020		
											FSO	Q	CS		020		
Valve Name	**Auxiliary Feedwater Turbine Supply Check Valve**																
2-MS-4B	26002-1	F-7	N/A	C	4	CS	SA	A	SYS	O/C	FSC	Q	CS		020		
											FSO	Q	CS		020		
Valve Name	**#1 S/G Main Steam Isolation Valve**																
2-MS-64A	26002-1	J-7	2	BC	34	CS	AO	A	O	C	FSO	Q	CM			CM-30	
											FT	Q	CM			CM-30	
											PI	2A					
											STC	Q	CS		004		
Valve Name	**#2 S/G Main Steam Isolation Valve**																
2-MS-64B	26002-1	D-9	2	BC	34	CS	AO	A	O	C	FSO	Q	CM			CM-30	
											FT	Q	CM			CM-30	
											PI	2A					
											STC	Q	CS		004		

Valve Tag	P&ID	P&ID Coor.	Safety Class	Cat.	Size	Valve Type	Act. Type	Active / Passive	Normal Position	Safety Position	Test Type	Test Freq.	Alt. Freq.	Relief Request	Deferred Just.	Tech. Pos.	Notes
Valve Name	**#1 S/G Main Steam Isolation Bypass Valve**																
2-MS-65A	26002-1	H-7	2	B	3	GL	MO	P	C	C	PI	2A					
											STC	Q	CS		035		
Valve Name	**#2 S/G Main Steam Isolation Bypass Valve**																
2-MS-65B	26002-1	C-9	2	B	3	GL	MO	P	C	C	PI	2A					
											STC	Q	CS		035		
Valve Name	**Primary Makeup Water To Quench Tank Check Valve**																
2-PMW-3	26014-2	D-12	2	AC	1.0	CL	SA	A	SYS	C	FSC	Q	CM			CM-31	
											FSO	Q	CM			CM-31	
											LJ	J					
Valve Name	**PMW Quench Tank Supply Control Valve Assembly**																
2-PMW-43	26014-2	D-11	2	A	2	GL	AO	A	C	C	FT	Q					
											LJ	J					
											PI	2A					
											STC	Q					
Valve Name	**RBCCW Pump "A" Min Flow Stop Valve**																
2-RB-107A	26022-1	H-7	3	B	2.5	GT	HA	A	O	C	FS	2A					

Valve Tag	P&ID	P&ID Coor.	Safety Class	Cat.	Size	Valve Type	Act. Type	Active / Passive	Normal Position	Safety Position	Test Type	Test Freq.	Alt. Freq.	Relief Request	Deferred Just.	Tech. Pos.	Notes
Valve Name	**RBCCW Pump "B" Min Flow Stop Valve**																
2-RB-107B	26022-1	F-7	3	B	2.5	GT	HA	A	O	C	FS	2A					
Valve Name	**RBCCW Pump "C" Min Flow Stop Valve**																
2-RB-107C	26022-1	D-7	3	B	2.5	GT	HA	A	O	C	FS	2A					
Valve Name	**A Shutdown Cooling Heat Exchanger Outlet Stop Valve**																
2-RB-13.1A	26022-2	F-4	3	B	18	BF	AO	A	C	O/C	FT	Q					
											PI	2A					
											STO	Q					
Valve Name	**B Shutdown Cooling Heat Exchanger Outlet Stop Valve**																
2-RB-13.1B	26022-2	F-8	3	B	18	BF	AO	A	C	O/C	FT	Q					
											PI	2A					
											STO	Q					
Valve Name	**Degasifier Effluent Cooler Return Isolation Valve**																
2-RB-210	26022-5	G-10	3	B	8	BF	AO	A	O	C	FT	Q					
											PI	2A					
											STC	Q					
Valve Name	**RBCCW Pump 11A Header "A" Suction Valve**																
2-RB-211A	26022-1	H-10	3	B	20	BF	AO	P	O/C	O/C	PI	2A					

Valve Tag	P&ID	P&ID Coor.	Safety Class	Cat.	Size	Valve Type	Act. Type	Active / Passive	Normal Position	Safety Position	Test Type	Test Freq.	Alt. Freq.	Relief Request	Deferred Just.	Tech. Pos.	Notes
Valve Name	**RBCCW Pump 11A Header "B" Suction Valve**																
2-RB-211B	26022-1	G-9	3	B	20	BF	AO	P	O/C	O/C	PI	2A					
Valve Name	**RBCCW Pump 11B Header "A" Suction Valve**																
2-RB-211C	26022-1	F-10	3	B	20	BF	AO	P	O/C	O/C	PI	2A					
Valve Name	**RBCCW Pump 11B Header "B" Suction Valve**																
2-RB-211D	26022-1	E-9	3	B	20	BF	AO	P	O/C	O/C	PI	2A					
Valve Name	**RBCCW Pump 11C Header 'A' Suction Valve**																
2-RB-211E	26022-1	D-10	3	B	20	BF	AO	P	O/C	O/C	PI	2A					
Valve Name	**RBCCW Pump 11C Header 'B' Suction Valve**																
2-RB-211F	26022-1	C-9	3	B	20	BF	AO	P	O/C	O/C	PI	2A					
Valve Name	**RBCCW Pump "B" Discharge Cross-Tie To Hx "A"**																
2-RB-251A	26022-1	G-6	3	B	20	BF	AO	P	C	O/C	PI	2A					
Valve Name	**RBCCW Pump'B'Discharge Cross-Tie To 'A Hx Valve**																
2-RB-251B	26022-1	E-6	3	B	20	BF	AO	P	C	O/C	PI	2A					
Valve Name	**CTMT Air Recirc Cooling "A" RBCCW Inlet Valve**																
2-RB-28.1A	26022-5	J-7	2	B	10	BF	AO	A	O	O/C	FT	Q					
											PI	2A					

Valve Tag	P&ID	P&ID Coor.	Safety Class	Cat.	Size	Valve Type	Act. Type	Active / Passive	Normal Position	Safety Position	Test Type	Test Freq.	Alt. Freq.	Relief Request	Deferred Just.	Tech. Pos.	Notes
Valve Name	**CTMT Air Recirc Cooling "B" RBCCW Inlet Valve**																
2-RB-28.1B	26022-5	E-8	2	B	10	BF	AO	A	O	O/C	FT	Q					
											PI	2A					
Valve Name	**CTMT. Air Recirc Cooling "C" RBCCW Inlet Valve**																
2-RB-28.1C	26022-5	G-7	2	B	10	BF	AO	A	O	O/C	FT	Q					
											PI	2A					
Valve Name	**CTMT Air Recirc Cooling "D" RBCCW Inlet Valve**																
2-RB-28.1D	26022-5	C-8	2	B	10	BF	AO	A	O	O/C	FT	Q					
											PI	2A					
Valve Name	**CTMT Air Recirc Cooling "A" RBCCW Normal Outlet Valve**																
2-RB-28.2A	26022-5	J-3	2	B	6	BF	AO	A	O	O/C	FT	Q					
											PI	2A					
Valve Name	**CTMT Air Recirc Cooling "B" RBCCW Normal Outlet Valve**																
2-RB-28.2B	26022-5	E-4	2	B	6	BF	AO	A	O	O/C	FT	Q					
											PI	2A					
Valve Name	**CTMT Air Recirc Cooling "C" RBCCW Normal Outlet Valve**																
2-RB-28.2C	26022-5	G-3	2	B	6	BF	AO	A	O	O/C	FT	Q					
											PI	2A					

Valve Tag	P&ID	P&ID Coor.	Safety Class	Cat.	Size	Valve Type	Act. Type	Active / Passive	Normal Position	Safety Position	Test Type	Test Freq.	Alt. Freq.	Relief Request	Deferred Just.	Tech. Pos.	Notes
Valve Name	**CTMT Air Recirc Cooling "D" RBCCW Normal Outlet Valve**																
2-RB-28.2D	26022-5	C-4	2	B	6	BF	AO	A	O	O/C	FT	Q					
											PI	2A					
Valve Name	**CTMT Air Recirc Cooling "A" RBCCW Emergency Outlet Valve**																
2-RB-28.3A	26022-5	J-3	2	B	10	BF	AO	A	C	O/C	FT	Q					
											PI	2A					
											STO	Q					
Valve Name	**CTMTAir Recirc Cooling 'B' RBCCW Emergency Outlet Valve**																
2-RB-28.3B	26022-5	E-4	2	B	10	BF	AO	A	C	O/C	FT	Q					
											PI	2A					
											STO	Q					
Valve Name	**CTMT Air Recirc Cooling "C" RBCCW Emergency Outlet Valve**																
2-RB-28.3C	26022-5	G-3	2	B	10	BF	AO	A	C	O/C	FT	Q					
											PI	2A					
											STO	Q					

Valve Tag	P&ID	P&ID Coor.	Safety Class	Cat.	Size	Valve Type	Act. Type	Active / Passive	Normal Position	Safety Position	Test Type	Test Freq.	Alt. Freq.	Relief Request	Deferred Just.	Tech. Pos.	Notes
Valve Name	**CTMT Air Recirc Cooling "D" RBCCW Emergency Outlet Valve**																
2-RB-28.3D	26022-5	C-4	2	B	10	BF	AO	A	C	O/C	FT	Q					
											PI	2A					
											STO	Q					
Valve Name	**RBCCW P11A Discharge Check Valve**																
2-RB-2A	26022-1	H-7	3	C	20	CT	FA	A	SYS	O/C	FSC	Q	CS		039		
											FSO	Q	CS		039		
Valve Name	**RBCCW P11B Discharge Check Valve**																
2-RB-2B	26022-1	F-7	3	C	20	CT	FA	A	SYS	O/C	FSC	Q	CS		039		
											FSO	Q	CS		039		
Valve Name	**RBCCW P11C Discharge Check Valve**																
2-RB-2C	26022-1	D-7	3	C	20	CT	FA	A	SYS	O/C	FSC	Q	CS		039		
											FSO	Q	CS		039		
Valve Name	**A RBCCW Header Containment Supply Valve**																
2-RB-30.1A	26022-6	E-4	2	A	8	GT	MO	A	O	C	LJ	J					
											PI	2A					
											STC	Q	CS		012		

Valve Tag	P&ID	P&ID Coor.	Safety Class	Cat.	Size	Valve Type	Act. Type	Active / Passive	Normal Position	Safety Position	Test Type	Test Freq.	Alt. Freq.	Relief Request	Deferred Just.	Tech. Pos.	Notes
Valve Name	**B RBCCW Header Containment Supply Valve**																
2-RB-30.1B	26022-6	E-4	2	A	6	GT	MO	A	O	C	LJ	J					
											PI	2A					
											STC	Q	CS		012		
Valve Name	**RBCCW Heat Exchanger "A" Relief Valve**																
2-RB-303A	26022-1	J-4	3	C	0.75	RV	SA	A	C	O/C	SRV	10A					
Valve Name	**RBCCW Heat Exchanger "B" Relief Valve**																
2-RB-303B	26022-1	G-4	3	C	0.75	RV	SA	A	C	O/C	SRV	10A					
Valve Name	**RBCCW Heat Exchanger "C" Relief Valve**																
2-RB-303C	26022-1	E-4	3	C	0.75	RV	SA	A	C	O/C	SRV	10A					
Valve Name	**Containment Spray Pump "B" Inlet Relief Valve**																
2-RB-304	26022-3	K-8	3	C	0.75	RV	SA	A	C	O/C	SRV	10A					
Valve Name	**LPSI Pump "B" To RBCCW Relief Valve**																
2-RB-305	26022-3	J-8	3	C	0.75	RV	SA	A	C	O/C	SRV	10A					
Valve Name	**HPSI Pump "C" To RBCCW Relief Valve**																
2-RB-306	26022-3	G-8	3	C	0.75	RV	SA	A	C	O/C	SRV	10A					

Valve Tag	P&ID	P&ID Coor.	Safety Class	Cat.	Size	Valve Type	Act. Type	Active / Passive	Normal Position	Safety Position	Test Type	Test Freq.	Alt. Freq.	Relief Request	Deferred Just.	Tech. Pos.	Notes
Valve Name	**HPSI Pump "B" To RBCCW Relief Valve**																
2-RB-307	26022-3	F-8	3	C	0.75	RV	SA	A	C	O/C	SRV	10A					
Valve Name	**HPSI Pump "A" To RBCCW Relief Valve**																
2-RB-308	26022-3	D-8	3	C	0.75	RV	SA	A	C	O/C	SRV	10A					
Valve Name	**LPSI Pump "A" To RBCCW Relief Valve**																
2-RB-309	26022-3	C-8	3	C	0.75	RV	SA	A	C	O/C	SRV	10A					
Valve Name	**Containment Spray Pump "A" RBCCW Relief Valve**																
2-RB-310	26022-3	B-8	3	C	0.75	RV	SA	A	C	O/C	SRV	10A					
Valve Name	**Engineered Safeguards Room Cooler "A" RBCCW Relief Valve**																
2-RB-311	26022-2	D-1	3	C	0.75	RV	SA	A	C	O/C	SRV	10A					
Valve Name	**Shutdown Heat Cooling Hx "A" RBCCW Relief Valve**																
2-RB-312	26022-2	G-3	3	C	1	RV	SA	A	C	O/C	SRV	10A					
Valve Name	**Engineered Safeguards Room Cooler "B" RBCCW Relief Valve**																
2-RB-313	26022-2	D-5	3	C	0.75	RV	SA	A	C	O/C	SRV	10A					
Valve Name	**Shutdown Cooling Hx "B" RBCCW Relief Valve**																
2-RB-314	26022-2	G-7	3	C	1	RV	SA	A	C	O/C	SRV	10A					

Valve Tag	P&ID	P&ID Coor.	Safety Class	Cat.	Size	Valve Type	Act. Type	Active / Passive	Normal Position	Safety Position	Test Type	Test Freq.	Alt. Freq.	Relief Request	Deferred Just.	Tech. Pos.	Notes
Valve Name	**Spent Fuel Pool Cooling Hx "B" RBCCW Relief Valve**																
2-RB-316	26022-2	J-10	3	C	0.75	RV	SA	A	C	O/C	SRV	10A					
Valve Name	**Spent Fuel Pool Cooling Hx "A" RBCCW Relief Valve**																
2-RB-318	26022-2	F-11	3	C	0.75	RV	SA	A	C	O/C	SRV	10A					
Valve Name	**Containment Air Recirculation Cooler 'D' RBCCW Rel. Valve.**																
2-RB-325	26022-5	D-7	3	C	1.5	RV	SA	A	C	O/C	SRV	10A					
Valve Name	**Containment Air Recirculation Cooler 'B' RBCCW Rel. Valve.**																
2-RB-328	26022-5	F-7	3	C	1.5	RV	SA	A	C	O/C	SRV	10A					
Valve Name	**Containment Air Recirculation Cooler 'A' RBCCW Rel. Valve.**																
2-RB-329	26022-5	J-6	3	C	1.5	RV	SA	A	C	O/C	SRV	10A					
Valve Name	**Containment Air Recirculation Cooler 'C' RBCCW Rel. Valve.**																
2-RB-330	26022-5	H-6	3	C	1.5	RV	SA	A	C	O/C	SRV	10A					
Valve Name	**A RBCCW Header Containment Return Valve**																
2-RB-37.2A	26022-4	C-11	2	A	8	GT	MO	A	O	C	LJ	J					
											PI	2A					
											STC	Q	CS		012		

Valve Tag	P&ID	P&ID Coor.	Safety Class	Cat.	Size	Valve Type	Act. Type	Active / Passive	Normal Position	Safety Position	Test Type	Test Freq.	Alt. Freq.	Relief Request	Deferred Just.	Tech. Pos.	Notes
Valve Name	**B RBCCW Header Containment Return Valve**																
2-RB-37.2B	26022-4	A-11	2	A	6	GT	MO	A	O	C	LJ	J					
											PI	2A					
											STC	Q	CS		012		
Valve Name	**C RBCCW Pump Radiation Monitor Flow Stop Valve**																
2-RB-39	26022-1	D-6	3	B	0.5	GL	HA	A	O	C	FS	2A					
Valve Name	**RBCCW Heat Exchanger 18A Header "A" Outlet Valve**																
2-RB-4.1A	26022-1	J-2	3	B	20	BF	AO	P	O/C	O/C	PI	2A					
Valve Name	**RBCCW Heat Exchanger 18A Header "B" Outlet Valve**																
2-RB-4.1B	26022-1	H-2	3	B	20	BF	AO	P	O/C	O/C	PI	2A					
Valve Name	**RBCCW Heat Exchanger 18B Header "A" Outlet Valve**																
2-RB-4.1C	26022-1	G-2	3	B	20	BF	AO	P	O/C	O/C	PI	2A					
Valve Name	**RBCCW Heat Exchanger 18B Header "B" Outlet Valve**																
2-RB-4.1D	26022-1	F-2	3	B	20	BF	AO	P	O/C	O/C	PI	2A					
Valve Name	**RBCCW Heat Exchanger 18C Header "A" Outlet Valve**																
2-RB-4.1E	26022-1	E-2	3	B	20	BF	AO	P	O/C	O/C	PI	2A					

Valve Tag	P&ID	P&ID Coor.	Safety Class	Cat.	Size	Valve Type	Act. Type	Active / Passive	Normal Position	Safety Position	Test Type	Test Freq.	Alt. Freq.	Relief Request	Deferred Just.	Tech. Pos.	Notes
Valve Name	**RBCCW Heat Exchanger 18C Header "B" Outlet Valve**																
2-RB-4.1F	26022-1	D-2	3	B	20	BF	AO	P	O/C	O/C	PI	2A					
Valve Name	**Letdown Heat Exchanger Outlet Temperature Control Valve**																
2-RB-402	26022-5	F-10	3	B	4	BF	AO	A	O	C	FT	Q	CS		029		
											STC	Q	CS		029		
Valve Name	**B RBCCW Pump Radmonitor Flow Stop Valve**																
2-RB-41	26022-1	G-6	3	B	0.5	GL	HA	A	O	C	FS	2A					
Valve Name	**Reactor Coolant Pump RBCCW Supply Inter-system LOCA Relief - Penetration 53**																
2-RB-413	26022-6	F-5	3	C	6	SV	SA	A	C	O/C	SRV	10A					
Valve Name	**Reactor Coolant Pump RBCCW Return Inter-system LOCA Relief - Penetration 54**																
2-RB-414	26022-4	B-9	3	C	6	SV	SA	A	C	O/C	SRV	10A					
Valve Name	**Reactor Coolant Pump RBCCW Supply Inter-system LOCA Relief - Penetration 24**																
2-RB-415	26022-6	D-5	3	C	6	SV	SA	A	C	O/C	SRV	10A					
Valve Name	**Reactor Coolant Pump RBCCW Supply Inter-system LOCA Relief - Penetration 29**																
2-RB-416	26022-4	C-9	3	C	6	SV	SA	A	C	O/C	SRV	10A					

Valve Tag	P&ID	P&ID Coor.	Safety Class	Cat.	Size	Valve Type	Act. Type	Active / Passive	Normal Position	Safety Position	Test Type	Test Freq.	Alt. Freq.	Relief Request	Deferred Just.	Tech. Pos.	Notes
Valve Name	**PMW Supply to RBCCW Surge Tank Check Valve**																
2-RB-417	26022-1	G-11	3	C	3	CS	FA	A	SYS	C	FSC	Q	CM			CM-33	
											FSO	Q	CM			CM-33	
Valve Name	**PMW to RBCCW Surge Tank Check Valve**																
2-RB-418	26022-1	G-11	3	C	3	CS	FA	A	SYS	C	FSC	Q	CM			CM-33	
											FSO	Q	CM			CM-33	
Valve Name	**A RBCCW Pump Rad Monitor Flow Stop Valve**																
2-RB-43	26022-1	H-6	3	B	0.5	GL	HA	A	O	C	FS	2A					
Valve Name	**RBCCW Pump "A" Sample Stop Valve**																
2-RB-56A	26022-1	H-7	3	B	0.375	GL	HA	A	O	C	FS	2A					
Valve Name	**RBCCW Pump "B" Sample Stop Valve**																
2-RB-56B	26022-1	F-7	3	B	0.375	GL	HA	A	O	C	FS	2A					
Valve Name	**RBCCW Pump "C" Sample Stop Valve**																
2-RB-56C	26022-1	D-7	3	B	0.375	GL	HA	A	O	C	FS	2A					

Valve Tag	P&ID	P&ID Coor.	Safety Class	Cat.	Size	Valve Type	Act. Type	Active / Passive	Normal Position	Safety Position	Test Type	Test Freq.	Alt. Freq.	Relief Request	Deferred Just.	Tech. Pos.	Notes
Valve Name	**ESGR Cooling 36A RBCCW Outlet Valve**																
2-RB-68.1A	26022-2	D-2	3	B	2	GL	AO	A	C	O	FT	Q					
											PI	2A					
											STO	Q					
Valve Name	**ESGR Cooling 36B RBCCW Outlet Valve**																
2-RB-68.1B	26022-2	D-6	3	B	2	GL	AO	A	C	O	FT	Q					
											PI	2A					
											STO	Q					
Valve Name	**SFPC Heat Exchanger RBCCW Header "A" Outlet Valve**																
2-RB-8.1A	26022-2	C-9	3	B	12	BF	AO	A	O	O/C	FT	Q					
											PI	2A					
											STC	Q					
											STO	Q					
Valve Name	**SFPC HX Header 'B' Outlet Stop Valve**																
2-RB-8.1B	26022-2	E-8	3	B	12	BF	AO	A	O	O/C	FT	Q					
											PI	2A					
											STC	Q					
											STO	Q					

Valve Tag	P&ID	P&ID Coor.	Safety Class	Cat.	Size	Valve Type	Act. Type	Active / Passive	Normal Position	Safety Position	Test Type	Test Freq.	Alt. Freq.	Relief Request	Deferred Just.	Tech. Pos.	Notes
Valve Name	**#1 Hot Leg Loop Flow Control Sample Valve**																
2-RC-001	26014-1	B-9	2	A	0.75	GL	AO	A	C	C	FT	Q					
											LJ	J					
											PI	2A					
											STC	Q					
Valve Name	**Pressurizer Surge Line Flow Control Sample Valve**																
2-RC-002	26014-1	G-9	2	A	0.75	GL	AO	A	C	C	FT	Q					
											LJ	J					
											PI	2A					
											STC	Q					
Valve Name	**Pressurizer Relief Line Flow Control Sample Valve**																
2-RC-003	26014-2	J-10	2	A	0.75	GL	AO	A	C	C	FT	Q					
											LJ	J					
											PI	2A					
											STC	Q					

Valve Tag	P&ID	P&ID Coor.	Safety Class	Cat.	Size	Valve Type	Act. Type	Active / Passive	Normal Position	Safety Position	Test Type	Test Freq.	Alt. Freq.	Relief Request	Deferred Just.	Tech. Pos.	Notes
Valve Name	**Primary Sample System Containment Isolation Valve**																
2-RC-045	26014-2	J-12	2	A	0.75	GL	AO	A	C	C	FT	Q					
											LJ	J					
											PI	2A					
											STC	Q					
Valve Name	**Pressurizer Safety Valve**																
2-RC-200	26014-2	H-7	1	C	2.5	RV	SA	A	C	O	SRV	5A					
Valve Name	**Pressurizer Safety Valve**																
2-RC-201	26014-2	H-7	1	C	2.5	RV	SA	A	C	O	SRV	5A					
Valve Name	**Quench Tank Flow Control Drain To PDT Valve**																
2-RC-401	26014-2	A-8	3	B	3	GL	AO	P	C	C	PI	2A					
Valve Name	**Pressurizer Power Operated Relief Valve**																
2-RC-402	26014-2	F-12	1	B	2.5	GL	SO	A	C	O	FSO	R					
											FT	R					
											PI	2A					
											STO	Q	R		030		

Valve Tag	P&ID	P&ID Coor.	Safety Class	Cat.	Size	Valve Type	Act. Type	Active / Passive	Normal Position	Safety Position	Test Type	Test Freq.	Alt. Freq.	Relief Request	Deferred Just.	Tech. Pos.	Notes
Valve Name	**Pressurizer Power-Operated Relief Valve Isolation Valve**																
2-RC-403	26014-2	G-12	1	B	2.5	GT	MO	A	O	C	PI	2A					
											STC	Q					
Valve Name	**Pressurizer Power Operated Relief Valve**																
2-RC-404	26014-2	F-10	1	B	2.5	GL	SO	A	C	O	FSO	R					
											FT	R					
											PI	2A					
											STO	Q	R		030		
Valve Name	**Pressurizer Power-Operated Relief Valve Isolation Valve**																
2-RC-405	26014-2	G-10	1	B	2.5	GT	MO	A	O	C	PI	2A					
											STC	Q					
Valve Name	**Reactor Vessel Drain Header Control Valve**																
2-RC-406	26014-1	G-6	1	B	0.75	GL	AO	A	O	C	FT	Q					
											PI	2A					
											STC	Q					

Valve Tag	P&ID	P&ID Coor.	Safety Class	Cat.	Size	Valve Type	Act. Type	Active / Passive	Normal Position	Safety Position	Test Type	Test Freq.	Alt. Freq.	Relief Request	Deferred Just.	Tech. Pos.	Notes
Valve Name	**Reactor Head Vent Solenoid Valve**																
2-RC-414	26014-1	J-8	1	B	1	GL	SO	A	C	O/C	FT	Q	CS		017		
											PI	2A					
											STC	Q	CS		017		
											STO	Q	CS		017		
Valve Name	**Reactor Head Vent Solenoid Valve**																
2-RC-415	26014-1	J-9	1	B	1	GL	SO	A	C	O/C	FT	Q	CS		017		
											PI	2A					
											STC	Q	CS		017		
											STO	Q	CS		017		
Valve Name	**Reactor Head Vent Solenoid Valve**																
2-RC-416	26014-1	J-8	1	B	1	GL	SO	A	C	O/C	FT	Q	CS		017		
											PI	2A					
											STC	Q	CS		017		
											STO	Q	CS		017		

Valve Tag	P&ID	P&ID Coor.	Safety Class	Cat.	Size	Valve Type	Act. Type	Active / Passive	Normal Position	Safety Position	Test Type	Test Freq.	Alt. Freq.	Relief Request	Deferred Just.	Tech. Pos.	Notes
Valve Name	**Reactor Head Vent Solenoid Valve**																
2-RC-417	26014-1	J-9	1	B	1	GL	SO	A	C	O/C	FT	Q	CS		017		
											PI	2A					
											STC	Q	CS		017		
											STO	Q	CS		017		
Valve Name	**Reactor Coolant Pump Seal Injection Header Inlet Valve**																
2-RC-71	26017-1	J-8	2	A	1	GL	HA	P	LC	C	LJ	J					
Valve Name	**Purification To Refuel Pump Stop Valve**																
2-RW-154	26023-1	K-2	3	A	4	GT	HA	P	LC	C	LJ	J					
Valve Name	**Refuel Pool To RW Purification System Stop Valve**																
2-RW-21	26023-1	K-2	2	A	4	GT	HA	P	LC	C	LJ	J					
Valve Name	**Emergency Makeup Water From Aux. Feedwater Pps. Inlet Check Valve**																
2-RW-222	26023-2	J-10	3	C	2	CL	FA	A	SYS	O	FSC	Q	CM			CM-37	
											FSO	Q	CM			CM-37	
Valve Name	**Fuel Pool Containment Isolation Valve**																
2-RW-232	26023-1	K-2	2	A	4	GT	HA	P	LC	C	LJ	J					

Valve Tag	P&ID	P&ID Coor.	Safety Class	Cat.	Size	Valve Type	Act. Type	Active / Passive	Normal Position	Safety Position	Test Type	Test Freq.	Alt. Freq.	Relief Request	Deferred Just.	Tech. Pos.	Notes
Valve Name	**Refueling Pool Water Supply Isolation Valve**																
2-RW-63	26023-1	K-2	3	A	4	GT	HA	P	LC	C	LJ	J					
Valve Name	**Primary Makeup Water To Spent Fuel Pool Check Valve**																
2-RW-67	26023-2	J-9	3	N/A	2	CL	FA	N/A	SYS	N/A	FSC	Q	CM			CM-36	
											FSO	Q	CM			CM-36	
Valve Name	**Station Air Containment Isolation Valve**																
2-SA-19	26009-8	C-12	2	A	2	GT	HA	P	LC	C	LJ	J					
Valve Name	**Station Air Containment Penetration Check Valve**																
2-SA-22	26009-10	C-5	2	AC	1.0	CH	SA	P	SYS	C	LJ	J					
Valve Name	**A HPSI Pump Header Check Valve**																
2-SI-008	26015-2	H-8	2	C	6	CS	FA	A	SYS	O	FSC	Q	CM			CM-39	
											FSO	Q	CM			CM-39	
Valve Name	**HPSI Header To Loop "2B" Check Valve**																
2-SI-009	26015-2	D-11	2	C	2	CL	FA	A	SYS	O/C	FSC	Q	R		025		Non-intrusive test.
											FSO	Q	R		025		

Valve Tag	P&ID	P&ID Coor.	Safety Class	Cat.	Size	Valve Type	Act. Type	Active / Passive	Normal Position	Safety Position	Test Type	Test Freq.	Alt. Freq.	Relief Request	Deferred Just.	Tech. Pos.	Notes
Valve Name	**HPSI Header To Loop "2A" Check Valve**																
2-SI-010	26015-2	F-11	2	C	2	CL	FA	A	SYS	O/C	FSC	Q	R		025		Non-intrusive test.
											FSO	Q	R		025		
Valve Name	**HPSI Header To Loop "1B" Check Valve**																
2-SI-011	26015-2	H-11	2	C	2	CL	FA	A	SYS	O/C	FSC	Q	R		025		Non-intrusive test.
											FSO	Q	R		025		
Valve Name	**HPSI Header To Loop "1A" Check Valve**																
2-SI-012	26015-2	K-11	2	C	2	CL	FA	A	SYS	O/C	FSC	Q	R		025		Non-intrusive test.
											FSO	Q	R		025		
Valve Name	**HPSI Header To Loop 1A Check Valve**																
2-SI-113	26015-2	J-11	2	C	2	CL	FA	A	SYS	O/C	FSC	Q	R		025		Non-intrusive test.
											FSO	Q	R		025		
Valve Name	**LPSI Header 'B' Loop '1A' Check Valve**																
2-SI-114	26015-2	H-12	2	C	6	CS	FA	A	SYS	O/C	FSC	Q	R		006		
											FSO	Q	CS		006		
Valve Name	**HPSI Header To Loop 1B Check Valve**																
2-SI-123	26015-2	G-11	2	C	2	CL	FA	A	SYS	O/C	FSC	Q	R		025		Non-intrusive test.
											FSO	Q	R		025		

Valve Tag	P&ID	P&ID Coor.	Safety Class	Cat.	Size	Valve Type	Act. Type	Active / Passive	Normal Position	Safety Position	Test Type	Test Freq.	Alt. Freq.	Relief Request	Deferred Just.	Tech. Pos.	Notes
Valve Name	**LPSI Header 'B' Loop '1B' Check Valve**																
2-SI-124	26015-2	G-12	2	C	6	CS	FA	A	SYS	O/C	FSC	Q	R		006		
											FSO	Q	CS		006		
Valve Name	**HPSI Header To Loop 2A Check Valve**																
2-SI-133	26015-2	E-12	2	C	2	CL	FA	A	SYS	O/C	FSC	Q	R		025		Non-intrusive test.
											FSO	Q	R		025		
Valve Name	**LPSI Header 'A' To Loop '2A' Check Valve**																
2-SI-134	26015-2	E-12	2	C	6	CS	FA	A	SYS	O/C	FSC	Q	R		006		
											FSO	Q	CS		006		
Valve Name	**HPSI Header To Loop 2B Check Valve**																
2-SI-143	26015-2	C-11	2	C	2	CL	FA	A	SYS	O/C	FSC	Q	R		025		Non-intrusive test.
											FSO	Q	R		025		
Valve Name	**LPSI Header 'B' To Loop '2B' Check Valve**																
2-SI-144	26015-2	C-12	2	C	6	CS	FA	A	SYS	O/C	FSC	Q	R		006		
											FSO	Q	CS		006		
Valve Name	**#2 Safety Injection Tank Relief Valve**																
2-SI-211	26015-3	G-9	2	C	1	RV	SA	A	C	O/C	SRV	10A					

Valve Tag	P&ID	P&ID Coor.	Safety Class	Cat.	Size	Valve Type	Act. Type	Active / Passive	Normal Position	Safety Position	Test Type	Test Freq.	Alt. Freq.	Relief Request	Deferred Just.	Tech. Pos.	Notes
Valve Name	**#1 Safety Injection Tank Outlet Check Valve**																
2-SI-215	26015-3	H-9	1	C	12	CS	FA	A	SYS	O/C	FSC	Q	CM			CM-43	
											FSO	Q	CM			CM-43	
Valve Name	**Loop '1A' Non-Return Check Valve**																
2-SI-217	26015-3	H-11	1	C	12	CS	FA	A	SYS	O/C	FSC	Q	CM			CM-44	
											FSO	Q	CM			CM-44	
Valve Name	**#1 Safety Injection Tank Relief Valve**																
2-SI-221	26015-3	K-9	2	C	1	RV	SA	A	C	O/C	SRV	10A					
Valve Name	**#2 Safety Injection Tank Outlet Check Valve**																
2-SI-225	26015-3	F-9	1	C	12	CS	FA	A	SYS	O/C	FSC	Q	CM			CM-43	
											FSO	Q	CM			CM-43	
Valve Name	**Loop '1B' Non-Return Check Valve**																
2-SI-227	26015-3	E-11	1	C	12	CS	FA	A	SYS	O/C	FSC	Q	CM			CM-44	
											FSO	Q	CM			CM-44	
Valve Name	**Safety Injection Tank #3 Relief Valve**																
2-SI-231	26015-3	E-9	2	C	1	RV	SA	A	C	O/C	SRV	10A					

Valve Tag	P&ID	P&ID Coor.	Safety Class	Cat.	Size	Valve Type	Act. Type	Active / Passive	Normal Position	Safety Position	Test Type	Test Freq.	Alt. Freq.	Relief Request	Deferred Just.	Tech. Pos.	Notes
Valve Name	**#3 Safety Injection Tank Outlet Check Valve**																
2-SI-235	26015-3	D-9	1	C	12	CS	FA	A	SYS	O/C	FSC	Q	CM			CM-43	
											FSO	Q	CM			CM-43	
Valve Name	**Loop '2A' Non-Return Ck Valve**																
2-SI-237	26015-3	C-11	1	C	12	CS	FA	A	SYS	O/C	FSC	Q	CM			CM-44	
											FSO	Q	CM			CM-44	
Valve Name	**Safety Injection Tank #4 Relief Valve**																
2-SI-241	26015-3	C-9	2	C	1	RV	SA	A	C	O/C	SRV	10A					
Valve Name	**#4 Safety Injection Tank Outlet Check Valve**																
2-SI-245	26015-3	B-9	1	C	12	CS	FA	A	SYS	O/C	FSC	Q	CM			CM-43	
											FSO	Q	CM			CM-43	
Valve Name	**Loop "2B" Non-Return Check Valve**																
2-SI-247	26015-3	A-11	1	C	12	CS	FA	A	SYS	O/C	FSC	Q	CM			CM-44	
											FSO	Q	CM			CM-44	
Valve Name	**Shutdown Cooling Flow Control Valve**																
2-SI-306	26015-1	C-7	2	B	10	BL	AO	P	LO	O	PI	2A					

Valve Tag	P&ID	P&ID Coor.	Safety Class	Cat.	Size	Valve Type	Act. Type	Active / Passive	Normal Position	Safety Position	Test Type	Test Freq.	Alt. Freq.	Relief Request	Deferred Just.	Tech. Pos.	Notes
Valve Name	**N2 Supply To Ctmt Stop Valve**																
2-SI-312	26015-3	D-2	2	A	0.75	GL	AO	A	O	C	FT	Q					
											LJ	J					
											PI	2A					
											STC	Q					
Valve Name	**Shutdown Cooling System Warmup Valve**																
2-SI-400	26015-1	C-9	2	B	2	GT	HA	A	LC	O/C	FS	2A					
Valve Name	**HPSI Pump 'B' Suction Header Check Valve**																
2-SI-401	26015-2	E-3	2	C	8	CS	FA	A	SYS	O	FSC	Q	CM			CM-45	
											FSO	Q	CM			CM-45	
Valve Name	**C HPSI Pump Discharge Check Valve**																
2-SI-405	26015-2	F-6	2	C	3	CS	FA	A	SYS	O/C	FSC	Q	R		002		
											FSO	Q	R		002		
Valve Name	**HPSI Header 'B' Relief Valve**																
2-SI-409	26015-2	D-10	2	C	0.75	RV	SA	A	C	O/C	SRV	10A					
Valve Name	**HPSI Pump 'A' Suction Header Check Valve**																
2-SI-410	26015-2	K-3	2	C	8	CS	FA	A	SYS	O	FSC	Q	CM			CM-45	
											FSO	Q	CM			CM-45	

Valve Tag	P&ID	P&ID Coor.	Safety Class	Cat.	Size	Valve Type	Act. Type	Active / Passive	Normal Position	Safety Position	Test Type	Test Freq.	Alt. Freq.	Relief Request	Deferred Just.	Tech. Pos.	Notes
Valve Name	**A/B HPSI Pumps Suction Xtie Valve**																
2-SI-411	26015-2	H-3	2	B	8	GT	MO	P	C	C	PI	2A					
Valve Name	**B/C HPSI Pumps Suction Xtie Valve**																
2-SI-412	26015-2	G-3	2	B	8	GT	MO	P	C	C	PI	2A					
Valve Name	**B HPSI Pump Discharge Check Valve**																
2-SI-414	26015-2	G-6	2	C	3	CS	FA	A	SYS	O/C	FSC	Q	R		002		
											FSO	Q	R		002		
Valve Name	**HPSI Header 'A' Relief Valve**																
2-SI-417	26015-2	H-10	2	C	1	RV	SA	A	C	O/C	SRV	10A					
Valve Name	**B HPSI Pump Recirculation Check Valve**																
2-SI-422	26015-2	G-6	2	C	2	CL	FA	A	SYS	O	FSC	Q	CM			CM-47	
											FSO	Q	CM			CM-47	
Valve Name	**HPSI Pump 'A' Recirculation Check Valve**																
2-SI-424	26015-2	H-6	2	C	2	CL	FA	A	SYS	O	FSC	Q	CM			CM-47	
											FSO	Q	CM			CM-47	

Valve Tag	P&ID	P&ID Coor.	Safety Class	Cat.	Size	Valve Type	Act. Type	Active / Passive	Normal Position	Safety Position	Test Type	Test Freq.	Alt. Freq.	Relief Request	Deferred Just.	Tech. Pos.	Notes
Valve Name	**C HPSI Pump Recirculation Check Valve**																
2-SI-426	26015-2	F-6	2	C	2	CL	FA	A	SYS	O	FSC	Q	CM			CM-47	
											FSO	Q	CM			CM-47	
Valve Name	**A HPSI Pump Discharge Check Valve**																
2-SI-427	26015-2	J-6	2	C	3	CS	FA	A	SYS	O/C	FSC	Q	R		002		
											FSO	Q	R		002		
Valve Name	**Shutdown Cooling Hx 'B' To H.P.S.I. Relief Valve**																
2-SI-430	26015-1	G-9	2	C	0.75	RV	SA	A	C	O/C	SRV	10A					
Valve Name	**Shutdown Cooling Hx 'A' To H.P.S.I. Relief Valve**																
2-SI-431	26015-1	H-8	2	C	0.75	RV	SA	A	C	O/C	SRV	10A					
Valve Name	**LPSI Pump 'B' Discharge Check Valve**																
2-SI-434	26015-1	C-5	2	C	10	CS	FA	A	SYS	O/C	FSC	Q	CS		027		
											FSO	Q	CS		027		
Valve Name	**LPSI Header 'B' Relief Valve**																
2-SI-439	26015-1	B-9	2	C	0.75	RV	SA	A	C	O/C	SRV	10A					
Valve Name	**B LPSI Pump Suction From Shutdown Cooling Valve**																
2-SI-440	26015-1	D-2	2	B	14	GT	HA	A	LC	O/C	PI	2A					

Valve Tag	P&ID	P&ID Coor.	Safety Class	Cat.	Size	Valve Type	Act. Type	Active / Passive	Normal Position	Safety Position	Test Type	Test Freq.	Alt. Freq.	Relief Request	Deferred Just.	Tech. Pos.	Notes
Valve Name	**A LPSI Pump Suction From SDC Valve**																
2-SI-441	26015-1	D-2	2	B	14	GT	HA	A	LC	O/C	PI	2A					
Valve Name	**LPSI Pump 'A' Discharge Check Valve**																
2-SI-446	26015-1	E-5	2	C	10	CS	FA	A	SYS	O/C	FSC	Q	CS		027		
											FSO	Q	CS		027		
Valve Name	**LPSI Pump 'A' Recirculation Check Valve**																
2-SI-448	26015-1	F-5	2	C	2	CL	FA	A	SYS	O	FSC	Q	CM			CM-49	
											FSO	Q	CM			CM-49	
Valve Name	**LPSI Pump 'B' Recirculation Check Valve**																
2-SI-451	26015-1	C-5	2	C	2	CL	FA	A	SYS	O	FSC	Q	CM			CM-49	
											FSO	Q	CM			CM-49	
Valve Name	**SIS Test Header Downstream Isolation Valve**																
2-SI-459	26015-3	K-2	NA	A	2	GT	HA	P	LC	C	LT	2A	5A	V-001			2-CS-050 and 2-CS-051 are alternatively tested valves in this flowpath.
Valve Name	**LPSI/CTMT Spray Test Header Stop Valve**																
2-SI-460	26015-1	K-10	2	A	6	GL	HA	P	LC	C	LT	2A	5A	V-001			
Valve Name	**Safety Injection Tank Drain Header Isolation Valve**																
2-SI-463	26015-3	K-4	2	A	3	GL	HA	P	LC	C	LJ	J					

Valve Tag	P&ID	P&ID Coor.	Safety Class	Cat.	Size	Valve Type	Act. Type	Active / Passive	Normal Position	Safety Position	Test Type	Test Freq.	Alt. Freq.	Relief Request	Deferred Just.	Tech. Pos.	Notes
Valve Name	**Shutdown Cooling Suction Relief Valve**																
2-SI-468	26015-1	D-8	2	C	1.5	RV	SA	A	C	O/C	SRV	10A					
Valve Name	**Shutdown Cooling Suction Relief Valve**																
2-SI-469	26015-3	G-5	2	C	1	RV	SA	A	C	O	SRV	10A					
Valve Name	**#1 Safety Injection Tank Fill & Drain Control Valve**																
2-SI-611	26015-3	J-11	2	B	1	GL	AO	P	C	C	PI	2A					
Valve Name	**#1 Safety Injection Tank Nitrogen Supply Control Valve**																
2-SI-612	26015-3	J-7	2	B	0.5	GL	AO	P	C	C	PI	2A					
Valve Name	**#1 Safety Injection Tank Vent To Containment Valve**																
2-SI-613	26015-3	J-10	2	B	1	GL	AO	A	C	O/C	PI	2A					
											STO	Q	CS		033		
Valve Name	**#1 Safety Injection Tank Outlet Valve**																
2-SI-614	26015-3	H-9	1	B	12	GT	MO	A	O	O/C	PI	2A					
											STC	Q	CS		028		
											STO	Q	CS		028		

Valve Tag	P&ID	P&ID Coor.	Safety Class	Cat.	Size	Valve Type	Act. Type	Active / Passive	Normal Position	Safety Position	Test Type	Test Freq.	Alt. Freq.	Relief Request	Deferred Just.	Tech. Pos.	Notes
Valve Name	**LPSI Header To Loop "1A" Injection Valve**																
2-SI-615	26015-1	E-12	2	B	6	GL	MO	A	C	O/C	PI	2A					
											STC	Q					
											STO	Q					
Valve Name	**B HPSI Header To Loop 1A Injection Valve**																
2-SI-616	26015-2	J-11	2	B	2	GL	MO	A	O	O/C	PI	2A					
											STC	Q	CS		040		
											STO	Q	CS		040		
Valve Name	**A HPSI Header To Loop 1A Injection Valve**																
2-SI-617	26015-2	K-11	2	B	2	GL	MO	A	O	O/C	PI	2A					
											STC	Q	CS		040		
											STO	Q	CS		040		
Valve Name	**Loop "1A" Non-Return Check Leakoff Drain Stop Valve**																
2-SI-618	26015-3	H-11	1	B	1	GL	AO	A	C	C	FT	Q	CS		019		
											PI	2A					
											STC	Q					
Valve Name	**#2 Safety Injection Tank Fill & Drain Control Valve**																
2-SI-621	26015-3	F-11	2	B	1	GL	AO	P	C	C	PI	2A					

Valve Tag	P&ID	P&ID Coor.	Safety Class	Cat.	Size	Valve Type	Act. Type	Active / Passive	Normal Position	Safety Position	Test Type	Test Freq.	Alt. Freq.	Relief Request	Deferred Just.	Tech. Pos.	Notes
Valve Name	**#2 Safety Injection Tank N2 Supply Control Valve**																
2-SI-622	26015-3	G-7	2	B	0.5	GL	AO	P	C	C	PI	2A					
Valve Name	**#2 Safety Injection Tank Vent To Containment Valve**																
2-SI-623	26015-3	G-10	2	B	1	GL	AO	A	C	O/C	PI	2A					
											STO	Q	CS		033		
Valve Name	**#2 Safety Injection Tank Outlet Valve**																
2-SI-624	26015-3	F-9	1	B	12	GT	MO	A	O	O/C	PI	2A					
											STC	Q	CS		028		
											STO	Q	CS		028		
Valve Name	**LPSI Header To Loop "1B" Injection Valve**																
2-SI-625	26015-1	D-12	2	B	6	GL	MO	A	C	O/C	PI	2A					
											STC	Q					
											STO	Q					
Valve Name	**B HPSI Header To Loop 1B Injection Valve**																
2-SI-626	26015-2	G-11	2	B	2	GL	MO	A	O	O/C	PI	2A					
											STC	Q	CS		040		
											STO	Q	CS		040		

Valve Tag	P&ID	P&ID Coor.	Safety Class	Cat.	Size	Valve Type	Act. Type	Active / Passive	Normal Position	Safety Position	Test Type	Test Freq.	Alt. Freq.	Relief Request	Deferred Just.	Tech. Pos.	Notes
Valve Name	**A HPSI Header To Loop 1B Injection Valve**																
2-SI-627	26015-2	H-11	2	B	2	GL	MO	A	O	O/C	PI	2A					
											STC	Q	CS		040		
											STO	Q	CS		040		
Valve Name	**Loop "1B" Non-Return Check Leakoff Drain Stop Valve**																
2-SI-628	26015-3	F-11	1	B	1	GL	AO	A	C	C	FT	Q	CS		019		
											PI	2A					
											STC	Q					
Valve Name	**#3 Safety Injection Tank Fill & Drain Control Valve**																
2-SI-631	26015-3	D-11	2	B	1	GL	AO	P	C	C	PI	2A					
Valve Name	**#3 Safety Injection Tank N2 Supply Control Valve**																
2-SI-632	26015-3	E-7	2	B	0.5	GL	AO	P	C	C	PI	2A					
Valve Name	**#3 Safety Injection Tank Vent To Containment Valve**																
2-SI-633	26015-3	D-10	2	B	1	GL	AO	A	C	O/C	PI	2A					
											STO	Q	CS		033		

Valve Tag	P&ID	P&ID Coor.	Safety Class	Cat.	Size	Valve Type	Act. Type	Active / Passive	Normal Position	Safety Position	Test Type	Test Freq.	Alt. Freq.	Relief Request	Deferred Just.	Tech. Pos.	Notes
Valve Name	**#3 Safety Injection Tank Outlet Valve**																
2-SI-634	26015-3	D-9	1	B	12	GT	MO	A	O	O/C	PI	2A					
											STC	Q	CS		028		
											STO	Q	CS		028		
Valve Name	**LPSI Header To Loop "2A" Injection Valve**																
2-SI-635	26015-1	C-12	2	B	6	GL	MO	A	C	O/C	PI	2A					
											STC	Q					
											STO	Q					
Valve Name	**B HPSI Header To Loop 2A Injection Valve**																
2-SI-636	26015-1	E-11	2	B	2	GL	MO	A	O	O/C	PI	2A					
											STC	Q	CS		040		
											STO	Q	CS		040		
Valve Name	**A HPSI Header To Loop 2A Injection Valve**																
2-SI-637	26015-2	F-11	2	B	2	GL	MO	A	O	O/C	PI	2A					
											STC	Q	CS		040		
											STO	Q	CS		040		

Valve Tag	P&ID	P&ID Coor.	Safety Class	Cat.	Size	Valve Type	Act. Type	Active / Passive	Normal Position,	Safety Position	Test Type	Test Freq.	Alt. Freq.	Relief Request	Deferred Just.	Tech. Pos.	Notes
Valve Name	**Loop "2A" Non-Return Check Leakoff Drain Stop Valve**																
2-SI-638	26015-3	C-11	1	B	1	GL	AO	A	C	C	FT	Q	CS		019		
											PI	2A					
											STC	Q					
Valve Name	**#4 Safety Injection Tank Fill & Drain Control Valve**																
2-SI-641	26015-3	B-11	2	B	1	GL	AO	P	C	C	PI	2A					
Valve Name	**#4 Safety Injection Tank N2 Supply Control Valve**																
2-SI-642	26015-3	B-7	2	B	0.5	GL	AO	P	C	C	PI	2A					
Valve Name	**#4 Safety Injection Tank Vent To Containment Valve**																
2-SI-643	26015-3	B-10	2	B	1	GL	AO	A	C	O/C	PI	2A					
											STO	Q	CS		033		
Valve Name	**#4 Safety Injection Tank Outlet Valve**																
2-SI-644	26015-3	B-9	1	B	12	GT	MO	A	O	O/C	PI	2A					
											STC	Q	CS		028		
											STO	Q	CS		028		

Valve Tag	P&ID	P&ID Coor.	Safety Class	Cat.	Size	Valve Type	Act. Type	Active / Passive	Normal Position	Safety Position	Test Type	Test Freq.	Alt. Freq.	Relief Request	Deferred Just.	Tech. Pos.	Notes
Valve Name	**LPSI Header To Loop "2B" Injection Valve**																
2-SI-645	26015-1	A-12	2	B	6	GL	MO	A	C	O/C	PI	2A					
											STC	Q					
											STO	Q					
Valve Name	**B HPSI Header To Loop 2B Injection Valve**																
2-SI-646	26015-1	C-11	2	B	2	GL	MO	A	O	O/C	PI	2A					
											STC	Q	CS		040		
											STO	Q	CS		040		
Valve Name	**A HPSI Header To Loop 2B Injection Valve**																
2-SI-647	26015-2	D-11	2	B	2	GL	MO	A	O	O/C	PI	2A					
											STC	Q	CS		040		
											STO	Q	CS		040		
Valve Name	**Loop "2B" Non-Return Check Leakoff Drain Stop Valve**																
2-SI-648	26015-3	A-11	1	B	1	GL	AO	A	C	C	FT	Q	CS		019		
											PI	2A					
											STC	Q					

Valve Tag	P&ID	P&ID Coor.	Safety Class	Cat.	Size	Valve Type	Act. Type	Active / Passive	Normal Position	Safety Position	Test Type	Test Freq.	Alt. Freq.	Relief Request	Deferred Just.	Tech. Pos.	Notes
Valve Name	**Shutdown Cooling Suction Header Ctmt Isolation Valve**																
2-SI-651	26015-3	G-4	1	A	12	GT	MO	A	C	O/C	LJ	J					
											PI	2A					
											STC	Q	CS		018		
											STO	Q	CS		018		
Valve Name	**Shutdown Cooling Suction Header Isolation Valve**																
2-SI-652	26015-3	G-5	1	B	12	GT	MO	A	C	O/C	PI	2A					
											STC	Q	CS		007		
											STO	Q	CS		007		
Valve Name	**B HPSI Pump Discharge Xtie To B HPSI Header**																
2-SI-653	26015-2	F-7	2	B	4.0	GT	MO	P	O/C	O/C	PI	2A					
Valve Name	**B HPSI Header Stop Valve**																
2-SI-654	26015-2	F-8	2	B	6	GT	MO	P	O	O	PI	2A					
Valve Name	**B HPSI Pump Discharge To A HPSI Header Xtie Valve**																
2-SI-655	26015-2	G-7	2	B	4.0	GT	MO	P	O/C	O/C	PI	2A					
Valve Name	**A HPSI Header Stop Valve**																
2-SI-656	26015-2	H-8	2	B	6	GT	MO	P	O	O	PI	2A					

Valve Tag	P&ID	P&ID Coor.	Safety Class	Cat.	Size	Valve Type	Act. Type	Active / Passive	Normal Position	Safety Position	Test Type	Test Freq.	Alt. Freq.	Relief Request	Deferred Just.	Tech. Pos.	Notes
Valve Name	**ESF Pumps Min Flow Recirculation Header Isolation Valve**																
2-SI-659	26015-1	J-7	2	A	4	GL	AO	A	O	O/C	FT	Q	CS		008		
											LT	2A	5A	V-001			LT per freq. of RR V-001
											PI	2A					
											STC	Q	CS		008		
											STO	Q	CS		008		
Valve Name	**ESF Pumps Min Flow Recirculation Header Isolation Valve**																
2-SI-660	26015-1	J-6	2	A	4	GL	AO	A	O	O/C	FT	Q	CS		008		
											LT	2A	5A	V-001			LT per freq. of RR V-001
											PI	2A					
											STC	Q	CS		008		
											STO	Q	CS		008		
Valve Name	**Safety Injection Tank Recirc. Header To Pdt Drain Valve**																
2-SI-661	26015-3	J-12	2	B	0.75	GL	AO	A	C	O/C	PI	2A					
											STC	Q					
Valve Name	**B SDC Heat Exchanger Discharge To B HPSI Suction**																
2-SI-662	26015-2	F-4	2	B	4	GT	MO	P	C	C	PI	2A					

Valve Tag	P&ID	P&ID Coor.	Safety Class	Cat.	Size	Valve Type	Act. Type	Active / Passive	Normal Position	Safety Position	Test Type	Test Freq.	Alt. Freq.	Relief Request	Deferred Just.	Tech. Pos.	Notes
Valve Name	**A SDC Heat Exchanger Discharge To A HPSI Suction**																
2-SI-663	26015-2	K-3	2	B	4	GT	MO	P	C	C	PI	2A					
Valve Name	**Safety Injection System To Loop '1A' Non-Return Check Valve**																
2-SI-706A	26015-3	H-5	1	C	6	CS	FA	A	SYS	O/C	FSC	Q	R		009		Non-intrusive test.
											FSO	Q	CS		009		
Valve Name	**Safety Injection System To Loop '1B' Non-Return Check Valve**																
2-SI-706B	26015-3	E-7	1	C	6	CS	FA	A	SYS	O/C	FSC	Q	R		009		Non-intrusive test.
											FSO	Q	CS		009		
Valve Name	**Safety Injection System To Loop '2A' Non-Return Check Valve**																
2-SI-706C	26015-3	C-7	1	C	6	CS	FA	A	SYS	O/C	FSC	Q	R		009		Non-intrusive test.
											FSO	Q	CS		009		
Valve Name	**Safety Injection System To Loop '2B' Non-Return Check Valve**																
2-SI-706D	26015-3	A-7	1	C	6	CS	FA	A	SYS	O/C	FSC	Q	R		009		Non-intrusive test.
											FSO	Q	CS		009		
Valve Name	**Shutdown Cooling Suction Header Manual Isolation Valve**																
2-SI-709	26015-1	F-9	2	A	12	GT	HA	A	LC	O/C	FS	2A					
											LJ	J					

Valve Tag	P&ID	P&ID Coor.	Safety Class	Cat.	Size	Valve Type	Act. Type	Active / Passive	Normal Position	Safety Position	Test Type	Test Freq.	Alt. Freq.	Relief Request	Deferred Just.	Tech. Pos.	Notes
Valve Name	**Containment Sump Discharge Isolation Valve**																
2-SSP-16.1	26024-1	J-11	2	A	3.0	GL	AO	A	C	C	FT	Q					
											LJ	J					
											PI	2A					
											STC	Q					
Valve Name	**Containment Sump Discharge Header Control Valve**																
2-SSP-16.2	26024-2	E-2	2	A	3.0	GL	AO	A	C	C	FT	Q					
											LJ	J					
											PI	2A					
											STC	Q					
Valve Name	**Cooler X-181A,X-181B Service Water Control Valve**																
2-SW-178A	26008-3	B-9	3	B	3	BF	AO	A	O	O/C	FT	Q					
											PI	2A					
											STC	Q					
											STO	Q					

Valve Tag	P&ID	P&ID Coor.	Safety Class	Cat.	Size	Valve Type	Act. Type	Active / Passive	Normal Position	Safety Position	Test Type	Test Freq.	Alt. Freq.	Relief Request	Deferred Just.	Tech. Pos.	Notes
Valve Name	**Cooler X-182 Service Water Control Valve**																
2-SW-178B	26008-3	D-9	3	B	1.5	GL	AO	A	O	O/C	FT	Q					
											PI	2A					
											STC	Q					
											STO	Q					
Valve Name	**Cooler X-183 Service Water Control Valve**																
2-SW-178C	26008-3	E-9	3	B	1.5	GL	AO	A	O	O/C	FT	Q					
											PI	2A					
											STC	Q					
											STO	Q					
Valve Name	**Cooler X-181A,X-181B Outlet Relief Valve**																
2-SW-189	26008-3	C-5	3	C	0.75	RV	SA	A	C	O/C	SRV	10A					
Valve Name	**Cooler X-182 Outlet Relief Valve**																
2-SW-190	26008-3	E-6	3	C	0.75	RV	SA	A	C	O/C	SRV	10A					
Valve Name	**Cooler X-183 Outlet Relief Valve**																
2-SW-191	26008-3	F-6	3	C	0.75	RV	SA	A	C	O/C	SRV	10A					

Valve Tag	P&ID	P&ID Coor.	Safety Class	Cat.	Size	Valve Type	Act. Type	Active / Passive	Normal Position	Safety Position	Test Type	Test Freq.	Alt. Freq.	Relief Request	Deferred Just.	Tech. Pos.	Notes
Valve Name	**A Service Water Cooling Pump Outlet Check Valve**																
2-SW-1A	26008-2	A-12	3	C	24	CD	FA	A	SYS	O/C	FSC	Q					
											FSO	Q					
Valve Name	**B Service Water Cooling Pump Outlet Check Valve**																
2-SW-1B	26008-2	A-9	3	C	24	CD	FA	A	SYS	O/C	FSC	Q					
											FSO	Q					
Valve Name	**C Service Water Cooling Pump Outlet Check Valve**																
2-SW-1C	26008-2	A-6	3	C	24	CD	FA	A	SYS	O/C	FSC	Q					
											FSO	Q					
Valve Name	**A D/G Heat Exchanger Service Water Bypass Valve**																
2-SW-231A	26008-2	F-3	3	B	8	BF	AO	A	O	C	FT	Q					
											PI	2A					
											STC	Q					
Valve Name	**B D/G Heat Exchanger Service Water Bypass Valve**																
2-SW-231B	26008-2	J-3	3	B	8	BF	AO	A	O	C	FT	Q					
											PI	2A					
											STC	Q					

Valve Tag	P&ID	P&ID Coor.	Safety Class	Cat.	Size	Valve Type	Act. Type	Active / Passive	Normal Position	Safety Position	Test Type	Test Freq.	Alt. Freq.	Relief Request	Deferred Just.	Tech. Pos.	Notes
Valve Name	**A Service Water Header To RBCCW Heat Exchangers**																
2-SW-3.1A	26008-2	K-12	3	B	24	BF	AO	P	O	O	PI	2A					
Valve Name	**B Service Water Header To RBCCW Heat Exchangers**																
2-SW-3.1B	26008-2	G-12	3	B	24	BF	AO	P	O	O	PI	2A					
Valve Name	**B Service Water Header Supply To TBCCW Stop Valve**																
2-SW-3.2A	26008-2	E-12	3	B	16	BF	AO	A	O	C	PI	2A					
											STC	Q					
Valve Name	**A Service Water Header Supply To TBCCW Stop Valve**																
2-SW-3.2B	26008-2	D-12	3	B	16	BF	AO	A	O	C	PI	2A					
											STC	Q					
Valve Name	**A Vital Chiller HX Relief**																
2-SW-306	26008-3	J-12	3	C	0.75	RV	SA	A	C	O/C	SRV	10A					
Valve Name	**B Vital Chiller HX Relief**																
2-SW-307	26008-3	J-5	3	C	0.75	RV	SA	A	C	O/C	SRV	10A					

Valve Tag	P&ID	P&ID Coor.	Safety Class	Cat.	Size	Valve Type	Act. Type	Active / Passive	Normal Position	Safety Position	Test Type	Test Freq.	Alt. Freq.	Relief Request	Deferred Just.	Tech. Pos.	Notes
Valve Name	**A RBCCW Heat Exchanger Outlet Temp. Control Valve**																
2-SW-8.1A	26008-2	J-7	3	B	14	BF	AO	A	O	O	FT	Q					
											PI	2A					
											STO	Q					
Valve Name	**B RBCCW Heat Exchanger Outlet Temp. Control Valve**																
2-SW-8.1B	26008-2	H-7	3	B	14	BF	AO	A	O	O	PI	2A					
Valve Name	**B RBCCW Heat Exchanger Outlet Temp. Control Valve - Facility 1 Solenoid Operated**																
2-SW-8.1B(Fac1)	26008-2	H-7	3	B	14	BF	AO	A	O	O	FT	Q					
											STO	Q					
Valve Name	**B RBCCW Heat Exchanger Outlet Temp. Control Valve - Facility 2 Solenoid Operated**																
2-SW-8.1B(Fac2)	26008-2	H-7	3	B	14	BF	AO	A	O	O	FT	Q					
											STO	Q					
Valve Name	**C RBCCW Heat Exchanger Outlet Temp. Control Valve**																
2-SW-8.1C	26008-2	G-7	3	B	14	BF	AO	A	O	O	FT	Q					
											PI	2A					
											STO	Q					

Valve Tag	P&ID	P&ID Coor.	Safety Class	Cat.	Size	Valve Type	Act. Type	Active / Passive	Normal Position	Safety Position	Test Type	Test Freq.	Alt. Freq.	Relief Request	Deferred Just.	Tech. Pos.	Notes
Valve Name	**A D/G Service Water Flow Control Valve**																
2-SW-89A	26008-2	C-2	3	B	6	BF	AO	A	C	O	FT	Q					
											PI	2A					
											STO	Q					
Valve Name	**B D/G Service Water Flow Control Valve**																
2-SW-89B	26008-2	F-2	3	B	6	BF	AO	A	C	O	FT	Q					
											PI	2A					
											STO	Q					
Valve Name	**A Service Water Pump Discharge Strainer Flush Valve**																
2-SW-90A	26008-2	A-12	3	B	3	PL	AO	A	C	O	FT	Q					
											STO	Q					
Valve Name	**B Service Water Pump Discharge Strainer Flush Valve**																
2-SW-90B	26008-2	A-9	3	B	3	PL	AO	A	C	O	FT	Q					
											STO	Q					
Valve Name	**C Service Water Pump Discharge Strainer Flush Valve**																
2-SW-90C	26008-2	A-6	3	B	3	PL	AO	A	C	O	FT	Q					
											STO	Q					

Valve Tag	P&ID	P&ID Coor.	Safety Class	Cat.	Size	Valve Type	Act. Type	Active / Passive	Normal Position	Safety Position	Test Type	Test Freq.	Alt. Freq.	Relief Request	Deferred Just.	Tech. Pos.	Notes
Valve Name	**A RBCCW Heat Exchanger Relief Valve**																
2-SW-92A	26008-2	K-10	3	C	0.75	RV	SA	A	C	O/C	SRV	10A					
Valve Name	**B RBCCW Heat Exchanger Relief Valve**																
2-SW-92B	26008-2	H-10	3	C	0.75	RV	SA	A	C	O/C	SRV	10A					
Valve Name	**C RBCCW Heat Exchanger Relief Valve**																
2-SW-92C	26008-2	G-10	3	C	0.75	RV	SA	A	C	O/C	SRV	10A					
Valve Name	**Rupture Disc - 2-CS-16.1A PLTB Protection**																
PSE-3008	26015-2	H-2	2	D	1	RD	SA	A	C	O	SRV	5A					
Valve Name	**Rupture Disc - 2-CS-16.1B PLTB Protection**																
PSE-3009	26015-2	H-1	2	D	1	RD	SA	A	C	O	SRV	5A					
Valve Name	**Condensate Storage Tank Vacuum Breaker/Pressure Limiter**																
PSE-7201A	26005-3	J-5	3	C	12.0	RD	SA	A	C	O	SRV	5A					
Valve Name	**Condensate Storage Tank Vacuum Breaker/Pressure Limiter**																
PSE-7201B	26005-3	J-5	3	D	8.0	RD	SA	A	C	O	SRV	5A					
Valve Name	**Condensate Storage Tank Vacuum Breaker/Pressure Limiter**																
PSE-7201C	26005-3	K-5	3	D	8.0	RD	SA	A	C	O	SRV	5A					

Valve Tag	P&ID	P&ID Coor.	Safety Class	Cat.	Size	Valve Type	Act. Type	Active / Passive	Normal Position	Safety Position	Test Type	Test Freq.	Alt. Freq.	Relief Request	Deferred Just.	Tech. Pos.	Notes
Valve Name	**Condensate Storage Tank Vacuum Breaker/Limiter**																
PSE-7201D	26005-3	K-5	3	C	12.0	RD	SA	A	C	O	SRV	5A					

ATTACHMENT 6

MILLSTONE POWER STATION, UNIT 3
INSERVICE TESTING (IST) PROGRAM PLAN FOR PUMPS AND VALVES
THIRD IST INTERVAL
DECEMBER 2, 2008 – DECEMBER 1, 2018
REVISION 0

DOMINION NUCLEAR CONNECTICUT, INC.
MILLSTONE POWER STATION UNIT 3

Millstone Power Station Unit 3

Inservice Testing Program
Third 10-Year Interval

Revision 0

Commercial Service Date:

April 23, 1986

Dominion Nuclear Connecticut, Inc.
Millstone Power Station Unit 3
Rope Ferry Road
Waterford, CT 06385

APPROVALS:

Prepared By: _____ Date: _____
IST Coordinator

Approved By: _____ Date: _____
Supervisor Components

Approved By: _____ Date: _____
Engineering Manager-Systems and Components

TABLE OF CONTENTS

SECTION

1.0 INTRODUCTION

1.1 Purpose
1.2 Scope

2.0 INSERVICE TESTING PLAN FOR PUMPS

2.1 Pump Inservice Testing Plan Description
2.2 Pump Plan Table Description

3.0 INSERVICE TESTING PLAN FOR VALVES

3.1 Valve Inservice Testing Plan Description
3.2 Valve Plan Table Description

4.0 ATTACHMENTS

4.1 System and P&ID Listing
4.2 Pump Relief Request Index
4.3 Pump Relief Requests
4.4 Valve Relief Request Index
4.5 Valve Relief Requests
4.6 Alternate Test Justification Index
4.7 Alternate Test Justifications
4.8 Station Technical Position Index
4.9 Station Technical Positions
4.10 Inservice Testing Pump Table
4.11 Inservice Testing Valve Table

1.0 INTRODUCTION

1.1. Purpose

To provide requirements for the performance and administration of assessing the operational readiness of those pumps and valves whose specific functions are required to:

- Shutdown the reactor to the safe shutdown condition
- Maintain the reactor in the safe shutdown condition
- Mitigate the consequences of an accident

1.2 Scope

The program plan was prepared to meet the requirements of the following subsections of the American Society of Mechanical Engineers (ASME) OM Code (2001 Edition through 2003 Addenda).

- Subsection ISTA, "*General Requirements*"

  ISTA contains the requirements directly applicable to IST including the Owner's Responsibility and Records Requirements.

- Subsection ISTB, "*Inservice Testing of Pumps in Light-Water Reactor Nuclear Power Plants*"

  ISTB establishes the requirements for IST of pumps in light-water reactor nuclear power plants. The pumps covered, are those provided with an emergency power source that are required in shutting down a reactor to the safe shutdown condition, in maintaining the safe shutdown condition, or in mitigating the consequences of an accident. These pumps are centrifugal type pumps.

- Subsection ISTC, *"Inservice Testing of Valves in Light-Water Reactor Nuclear Power Plants"*

  ISTC establishes the requirements for IST of valves in light-water reactor nuclear power plants. The valves covered include those which provide overpressure protection and are required to perform a specific function, either actively by changing valve obturator position or passively by effectively maintaining required obturator position in shutting down a reactor to the safe shutdown condition, in maintaining the safe shutdown condition, or in mitigating the consequences of an accident.

- Mandatory Appendix I, *"Inservice Testing of Pressure Relief Devices in Light-Water Reactor Nuclear Power Plants"*

  Mandatory Appendix I provides the requirements for performance testing and monitoring of nuclear plant pressure relief devices. Methods, intervals, and record requirements for monitoring and testing are established, as well as guidelines for the evaluation of results. This appendix applies to safety valves, safety relief valves, pilot-operated pressure relief valves, power-actuated pressure relief valves, non-reclosing pressure relief devices and vacuum relief devices, including all accessories and appurtenances.

- Mandatory Appendix II, *"Check Valve Condition Monitoring Program"*

  Mandatory Appendix II provides an alternative to the testing or examination requirements of ISTC-3510, ISTC 3520, ISTC 3550, and ISTC-5221. The purpose of this program is both to improve valve performance and to optimize testing, examination, and preventive maintenance activities in order to maintain the continued acceptable performance of a select group of check valves.

The Millstone Power Station Unit 3 (MPS3) third 10-year interval pump and valve IST plan will be in effect as follows:

Begin	**End**
December 2, 2008	December 1, 2018

This plan will be updated as required in accordance with 10CFR50.55a(f).

This program plan provides a complete listing of those pumps and valves included in the program per the requirements of:

- ISTA *"General Requirements ,"*
- ISTB *"Inservice Testing of Pumps in Light-Water Reactor Nuclear Power Plants"*
- ISTC *"Inservice Testing of Valves in Light-Water Reactor Nuclear Power Plants"*
- Mandatory Appendix I, *"Inservice Testing of Pressure Relief Devices in Light-Water Reactor Nuclear Power Plants"*
- Mandatory Appendix II, *"Check Valve Condition Monitoring Program"*

The key features of this plan are: the Pump and Valve Table listings, Relief Requests, Alternative Test Justifications, and Technical Positions. The MPS3 IST Basis Document includes the justification for inclusion of components in the scope of IST and also the justifications for exclusion from the program. Administrative procedures, surveillance testing procedures, and other records required to define and execute the IST program are all retained and available at MPS3.

2.0 INSERVICE TESTING PLAN FOR PUMPS

2.1 Pump Inservice Testing Plan Description

This program plan meets the requirements of ASME OM Code ISTB with the exception of specific relief requests contained in Attachment 4.3.

2.2 Pump Plan Table Description

The pumps included in the MPS3 IST Plan are listed in Attachment 4.10. The information contained in these tables identifies those pumps to be tested to the requirements of the ASME OM Code, the testing parameters and frequencies, and associated relief requests. The headings for the pump tables are delineated below.

Pump Name	Descriptive name of the pump.	
Pump Tag	Unique pump identification number.	
P&ID	Piping and Instrumentation Drawing (Flow Diagram) on which the pump is represented.	
P&ID Coor.	The P&ID Coordinate location of the pump.	
Safety Class	ASME Code classification of the pump.	
	1	Class 1
	2	Class 2
	3	Class 3
Pump Type	Pump type.	
	C	Centrifugal
	V	Vertical
	PD	Positive Displacement
Pump Driver	Pump driver type.	
	Motor	Motor driven
	Turbine	Steam turbine driven
	Engine	Engine Driven
Category	Pump category as defined in ISTB-2000.	
	A	Continuous or routinely operated pumps
	B	Standby pumps not operated routinely except for testing

Pump Plan Table Description (Cont'd)

Test Type — Measured pump test parameters.

DP	Differential Pressure
N	Speed
Q	Flow Rate
V	Vibration

a - Denotes a Category A Pump Test
b - Denotes a Category B Pump Test
c - Denotes a Comprehensive Pump Test

Test Freq. — Frequency for performing the specified IST.

Q	Quarterly (92 Days)
2A	Biennially (Two Years)

Relief Request — A relief request number is listed when a specific code requirement is determined to be impracticable. Attachment 4.2 contains an index of all the relief requests included in Attachment 4.3.

Tech. Position — A technical position number is listed when the requirements of the code are not easily interpreted and clarifying information is needed. The technical position is used to document how code requirements are being implemented at the station. Technical positions are prefixed with "TP". Attachment 4.8 contains an index of all the Station Technical Positions included in Attachment 4.9.

3.0 INSERVICE TESTING PLAN FOR VALVES

3.1 Valve Inservice Testing Plan Description

This plan establishes the test intervals and parameters to be measured to meet the requirements of ISTA, ISTC, Appendix I, and Appendix II with the exception of the specific relief requests contained in Attachment 4.5.

Where the frequency requirements for valve testing have been determined to be impracticable, Alternate Test Justifications have been identified and written. These justifications are provided in Attachment 4.7.

3.2 Valve Plan Table Description

The valves included in the MPS3 IST Plan are listed in Attachment 4.11. The information contained in these tables identify those valves that are required to be tested to the requirements of ISTC and Appendix I, the test parameters, frequency of testing, and the associated relief requests. The headings for the valve tables are delineated below.

Valve Name — Descriptive name of the valve.

Valve Tag — A unique identifier for the valve.

P&ID — Piping and Instrumentation Drawing (Flow Diagram) on which the valve is represented.

P&ID Coor. — The P&ID Coordinate location of the valve.

Safety Class — The ASME Class abbreviation.

1	Class 1
2	Class 2
3	Class 3
4	Non-Code Class

Cat. — The ASME OM Code category (or categories) as defined in ISTC-1300.

A	Seat Leakage Limited.
B	Seat Leakage Not Required.
C	Self-Actuating Valves.
D	Single Use Valves.
AC	Both Categories A and C.
BC	Both Categories B and C.
N/A	Not Applicable

Size — The nominal pipe size of the valve, in inches.

Valve Plan Table Description (Cont'd)

Valve Type — The valve body style abbreviation.

AN	Angle
BF	Butterfly
BL	Ball
CD	Duo-Check
CH	Check (Unknown Type)
CL	Lift Check
CN	Nozzle Check
CS	Swing Check
CT	Tilted Disc Check
DI	Diaphragm
GL	Globe
GL-3W	Three Way Globe
GT	Gate
NE	Needle
PL	Plug
RV	Relief
SC	Stop Check
SV	Safety

Act. Type — The valve actuator type abbreviation.

AO	Air Operated
FA	Flow Actuated
HA	Manually Operated
HO	Hydraulic Operated
MO	Motor Operated
SA	Self Actuated
SO	Solenoid Operated

Active/Passive — Active or Passive function determination for the valve in accordance with ISTC-2000.

A	Active
N/A	Not Applicable
P	Passive

Valve Plan Table Description (Cont'd)

Normal Position

The normal position abbreviation. This refers to the valve's position during normal power operation. If the system does not operate during power operation, then the normal position is the position of the valve when the system is not operating.

C	Closed
LC	Locked Closed
LO	Locked Open
LT	Locked Throttled
O	Open
O/C	Open or Closed
SYS	System Condition Dependent

Safety Position

The safety function position(s). For valves that perform safety functions in the open and closed positions more than one safety function position may be specified.

C	Closed
N/A	Not Applicable
O	Open
O/C	Open and Closed

Test Type

The test type abbreviation.

DIS	Disassemble, Inspect, Stroke Test one valve each refueling
FS	Full Stroke (Open and Closed)
FSC	Full Stroke Closed
FSO	Full Stroke Open
FT	Fail Test
LJ	Leak Rate Test - 10CFR50 App. J
LT	Leak Test
NO	Verify Function During Normal Operation
NR	No Test Required
PI	Remote Position Indicator
RT	Radiograph for valve closure verification
SRV	Pressure Relief Device Test
STC	Stroke Time Closed
STO	Stroke Time Open

Valve Plan Table Description (Cont'd)

Test Freq. — The required test frequency abbreviation.

2A	2-Years
5A	5-Years
10A	10-Years
6M	6-Months
A/R	As Required
CM	Condition Monitoring
CS	Cold Shutdown
CS/BI	Cold Shutdown, not to exceed two years
J	Appendix J
NO	Normal Operation
Q	Quarterly
R	Refueling Outage

Alt. Freq. — The alternate test frequency justified by the valve's associated Alternate Test Justification, where applicable.

Relief Request — A relief request number is listed when a specific code requirement is determined to be impracticable. Attachment 4.4 contains an index of all the valve relief requests included in Attachment 4.5.

Alt. Test Just. — This lists the applicable Alternate Test Justification. This section refers to Cold Shutdown Justifications, Refueling Outage Justifications, and justifications for any other test frequencies that differ from the ASME OM Code required testing frequency. Attachment 4.6 contains an index of all the Alternate Test Justifications included in Attachment 4.7.

Tech. Position — A technical position number is listed when the requirements of the code are not easily interpreted and clarifying information is needed. The technical position is used to document how code requirements are being implemented at the station. Technical positions are prefixed with "TP". Attachment 4.8 contains an index of all the Station Technical Positions included in Attachment 4.9.

4.0 ATTACHMENTS:

Attachment 4.1
System and P&ID Listing

Attachment 4.2
Pump Relief Request Index

Attachment 4.3
Pump Relief Requests

Attachment 4.4
Valve Relief Request Index

Attachment 4.5
Valve Relief Requests

Attachment 4.6
Alternate Test Justification Index

Attachment 4.7
Alternate Test Justifications

Attachment 4.8
Station Technical Position Index

Attachment 4.9
Station Technical Positions

Attachment 4.10
Inservice Testing Pump Table

Attachment 4.11
Inservice Testing Valve Table

ATTACHMENT 4.1

SYSTEM AND P&ID LISTING

System Number	System Abbreviation	System Description	P&ID
3301	RCS	REACTOR COOLANT	26902-1
3301	RCS	REACTOR COOLANT	26902-2
3301	RCS	REACTOR COOLANT	26902-3
3301	RCS	REACTOR COOLANT	26902-4
3301	RCS	REACTOR COOLANT	26902-5
3301	RCS	REACTOR COOLANT	26902-6
3304A	CHS	VOLUME CONTROL	26903
3304A	CHS	VOLUME CONTROL	26904-1
3304A	CHS	VOLUME CONTROL	26904-4
3304C	CHS	BORIC ACID	26904-3
3305	SFC	SPENT FUEL POOL COOLING & PURIFICATION	26911
3306	RSS	CONTAINMENT RECIRCULATION SPRAY	26912-3
3307A	SIL	LOW PRESSURE SAFETY INJECTION	26912-2
3307B	RHS	RESIDUAL HEAT REMOVAL	26912-1
3308	SIH	HIGH PRESSURE SAFETY INJECTION	26913-1
3308	SIH	HIGH PRESSURE SAFETY INJECTION	26913-2
3309	QSS	QUENCH SPRAY	26915
3311A	SSR	REACTOR PLANT SAMPLING	26944-1
3311A	SSR	REACTOR PLANT SAMPLING	26944-2
3311C	SSP	POST ACCIDENT ANALYSIS SAMPLING	26955-1
3312B	LMS	CONTAINMENT LEAKAGE MONITORING	26954-1
3312C	CMS	CONTAINMENT ATMOSPHERIC MONITORING	26954-1
3313A	HCS	HYDROGEN RECOMBINER BLDG VENTILATION	26915
3313E	HVU	CONTAINMENT PURGE	26953-1
3313F	CVS	CONTAINMENT VACUUM	26953-1
3314F	HVK	CONTROL BLDG.HVAC;BLDG PURGE,BTY ROOM HVAC,COM & INST RACK A/C	26951-1
3314F	HVK	CONTROL BLDG.HVAC;BLDG PURGE,BTY ROOM HVAC,COM & INST RACK A/C	26951-4

System Number	System Abbreviation	System Description	P&ID
3314F	HVK	CONTROL BLDG.HVAC;BLDG PURGE,BTY ROOM HVAC,COM & INST RACK A/C	26951-5
3316A	MSS - DTM	MAIN STEAM & RELIEF VENTS & DRAINS	26923-2
3316A	MSS - DTM	MAIN STEAM & RELIEF VENTS & DRAINS	26923-5
3316A	DTM	MAIN STEAM & RELIEF VENTS & DRAINS	26945-1
3316C	BDG	STEAM GENERATOR BLOWDOWN	26923-1
3321A	FWS	FEEDWATER	26930-3
3321A	FWS	FEEDWATER	26930-4
3322	FWA	AUXILIARY FEEDWATER	26930-2
3326	SWP	SERVICE WATER	26933-1
3326	SWP	SERVICE WATER	26933-2
3326	SWP	SERVICE WATER	26933-4
3328	WTC	CHLORINATION	26933-1
3330A	CCP	REACTOR PLANT COMPONENT COOLING	26921-1
3330A	CCP	REACTOR PLANT COMPONENT COOLING	26921-2
3330C	CDS	REACTOR PLANT CHILLED WATER	26922-1
3330D	CCE	CHARGING PUMP COOLING	26905-1
3330E	CCI	SAFETY INJECTION PUMP COOLING	26914-1
3331A	ASS	AUXILIARY STEAM	26935-2
3331D	HVH	HOT WATER HEATING	26937-2
3332B	IAS	CONTAINMENT INSTRUMENT AIR	26938-3
3332C	SAS	SERVICE AIR	26938-1
3333	GSN	NITROGEN SYSTEM ON CAT 1 COMPONENTS	26939-2
3335A	DGS	REACTOR PLANT GASEOUS DRAINS	26907
3335B	DAS	REACTOR PLANT AERATED DRAINS	26906-3
3337	VRS	REACTOR PLANT GASEOUS VENTS	26907
3339	SGF	STEAM GENERATOR CHEMICAL FEED	26931
3340C	PGS	PRIMARY GRADE WATER	26919-1
3341A	FPW	FIRE PROTECTION WATER	26946-2
3346A	EGA	DIESEL AIR START	26916-2
3346A	EGA	DIESEL AIR START	26916-4
3346B	EGF	DIESEL FUEL OIL	26917-1

ATTACHMENT 4.2

PUMP RELIEF REQUEST INDEX

Relief Request No.	Description	NRC Approval Date
P-001	Safety Injection Pump Cooling Pump Flow Measurement	
P-002	Categorization of Residual Heat Removal Pumps as Group A/B	
P-003	Use of Code Case OMN-6 for Digital Instruments	
P-004	Use of Code Case OMN-9 for Use of Pump Curves	

ATTACHMENT 4.3

PUMP RELIEF REQUESTS

10 CFR 50.55a Request Number P-001

Safety Injection Pump Cooling Pump Flow Measurement

Proposed Alternative
In Accordance with 10CFR50.55a(a)(3)(ii)

Hardship or Unusual Difficulty without a Compensating Increase in Level of Quality or Safety

ASME Code Component(s) Affected

3CCI*P1A	Safety Injection Pump Cooling (CCI) Pump A
3CCI*P1B	Safety Injection Pump Cooling (CCI) Pump B

Applicable Code Edition and Addenda

ASME OM Code 2001 Edition through 2003 Addenda

Applicable Code Requirement(s)

ISTB-5122 Group B Test Procedure

ISTB-5123 Comprehensive Test Procedure

Table ISTB-5100-1, Centrifugal Pump Test Acceptance Criteria

Reason for Request

Pursuant to 10 CFR 50.55a, "Codes and Standards", paragraph (a)(3)(ii), relief is requested from the requirement of ASME OM Code for measuring and recording pump flow. Due to system design and lack of an instrumented minimum flow line, total pump flow cannot be measured during the Group B or Comprehensive pump tests.

The CCI system is designed to provide 9.5 gpm cooling flow to the Safety Injection Pump lube oil cooler. Since the original design flow was approximately 21 gpm and the pump rated flow is 25 gpm, the minimum flow recirculation line was designed with an orifice sized to pass 15 gpm. However, the minimum flow recirculation lines were not designed to allow flow measurement with either permanent or temporary instrumentation that would meet ASME Code requirements. The total length of straight pipe for the 3CCI*P1A and 3CCI*P1B recirc lines is approximately 28 inches and 21 inches, respectively, which is insufficient length to install flow measurement equipment. These lines were also not designed to be isolated. As a result, the majority of pump flow during IST pump testing is unmonitored. Figure 1 contains a sketch of the system.

Given the associated hardship, monitoring the minimum recirculation line flow rate does not provide a compensating increase in the level of quality or safety for the following reasons:

1. Without the ability to isolate the minimum flow recirculation lines or to measure flow directly, the majority of CCI pump flow cannot be measured without implementing system design modifications.

10 CFR 50.55a Request Number P-001

2. Any increase in recirculation flow (i.e. increase in orifice size) would result in a reduction in pump differential which would be conservatively identified as pump degradation.

3. A complete obstruction of this unmonitored recirculation flow could only increase pump differential (i.e., mask pump degradation) by an amount less than 3.7% because the pump head versus flow characteristics are relatively flat over the normal operating range for these pumps.

Proposed Alternative and Basis for Use

Since the pump head versus flow characteristics are relatively flat over the normal operating range for these pumps (see Figure 2, Pump Curve), the change in pump differential pressure from rated flow to the shutoff head condition is approximately 3.7%. As a result, a complete obstruction of this unmonitored recirculation flow could only increase pump differential (i.e. mask pump degradation) by an amount less than 3.7%. To account for a complete obstruction of pump recirculation flow, the lower acceptance criteria for differential pressure will be raised from 90% to 94% for both the Group B and Comprehensive tests. Any increase in recirculation flow, i.e. increase in orifice size, would result in a reduction in pump differential which would be conservatively identified as pump degradation.

Although the minimum flow recirculation lines do not have provisions for isolation, the potential to block flow by installing a blind flange in the restriction orifice was investigated. Full flow data from the Generic Letter 89-13 Test Program indicated that a maximum of 11 - 12 gpm is obtained with all valves wide open. Since the minimum flow requirement for the pump is 15 gpm, this flow would not be adequate to protect the pump from damage. Without the ability to isolate the minimum flow recirculation lines or to measure flow directly, the majority of CCI pump flow cannot be measured without implementing system design modifications.

During IST pump tests, for both the quarterly Group B and biennial Comprehensive, the system will be throttled to a reference flow of 10 gpm, +/- 0.2 gpm with an unmonitored recirculation flow of approximately 15 gpm. The pump differential pressure will then be recorded and compared to the ASME Code lower acceptance criteria raised from 90% to 94% for both the Group B and Comprehensive tests.

Using the provisions of this relief request as an alternative to the specific requirements of ISTB-5122 and ISTB-5123 identified above will provide an acceptable level of quality and safety.

Duration of Proposed Alternative

This proposed alternative will be utilized for the third 10-year interval.

Precedents

This relief request was previously approved for a similar request in second 10-year interval at MPS3 as P-002, dated February 16, 1999 (TAC No. MA3521).

Figure 1

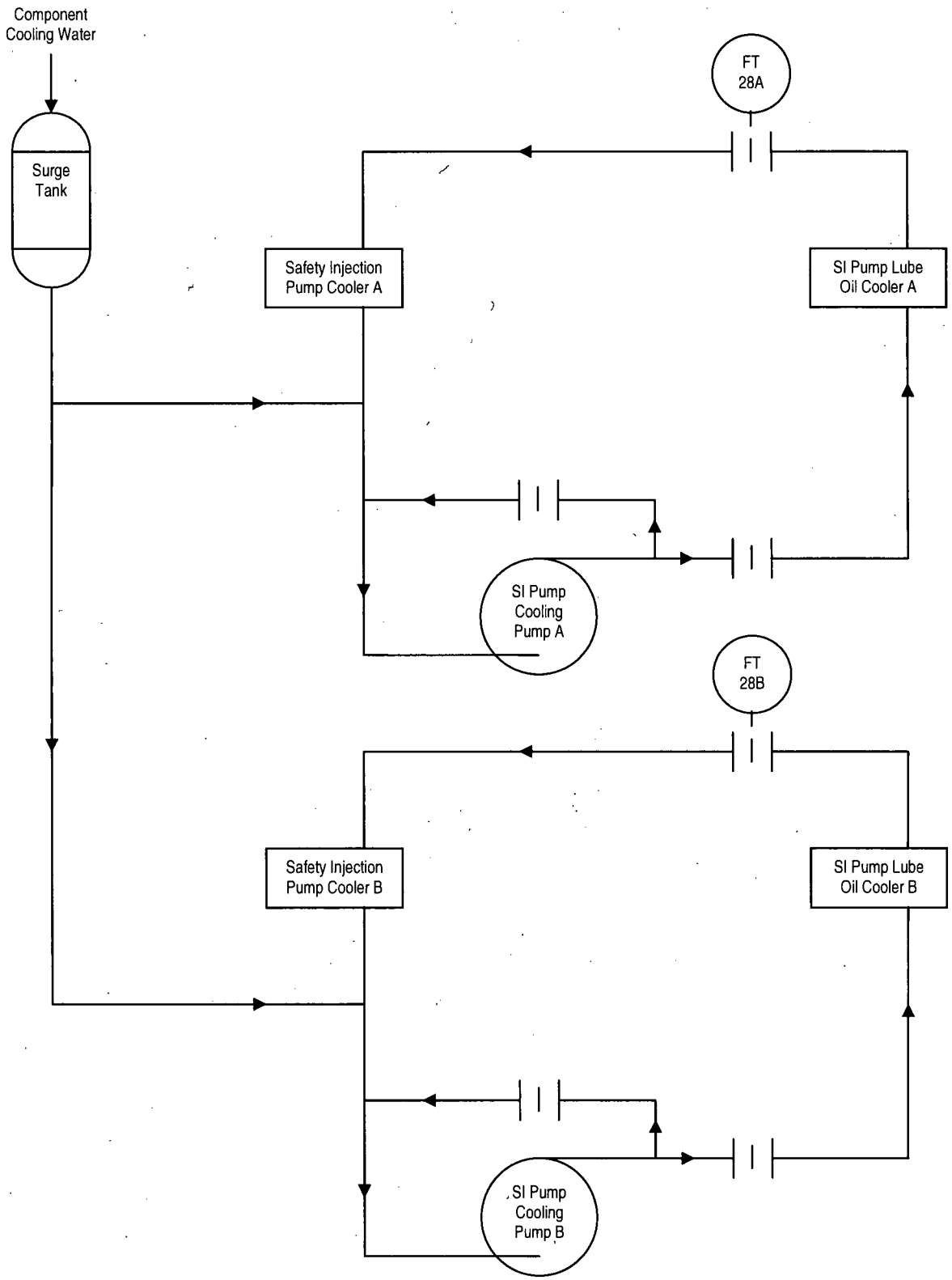
Component
Cooling Water
Surge
Tank
FT
28A
Safety Injection
Pump Cooler A
SI Pump Lube
Oil Cooler A
SI Pump
Cooling
Pump A
FT
28B
Safety Injection
Pump Cooler B
SI Pump Lube
Oil Cooler B
SI Pump
Cooling
Pump B

Figure 2

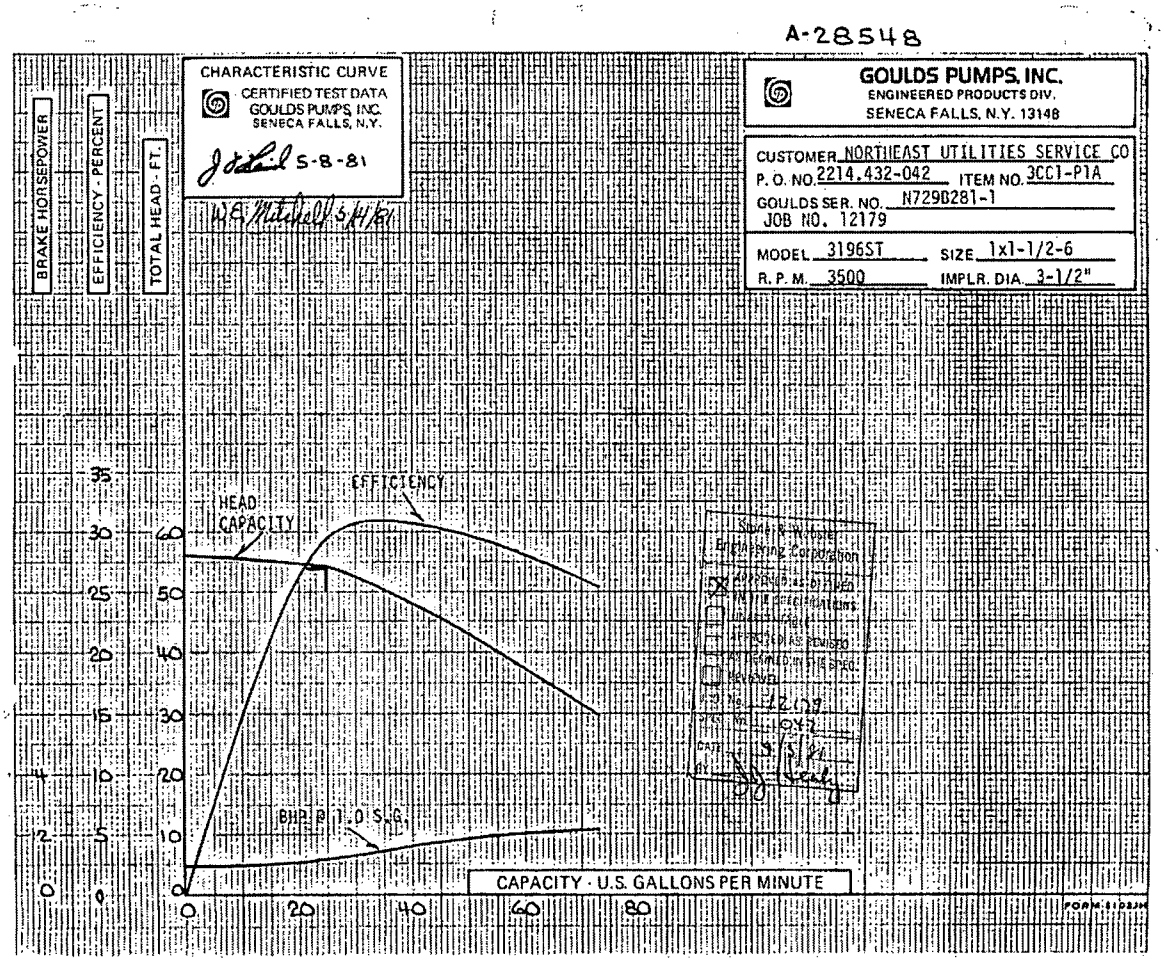
A-28548
CHARACTERISTIC CURVE
CERTIFIED TEST DATA
GOULDS PUMPS, INC.
SENECA FALLS, N.Y.
5-8-81
GOULDS PUMPS, INC.
ENGINEERED PRODUCTS DIV.
SENECA FALLS, N.Y. 13148
CUSTOMER NORTHEAST UTILITIES SERVICE CO
P. O. NO. 2214.432-042 ITEM NO. 3CC1-P1A
GOULDS SER. NO. N729B281-1
JOB NO. 12179
MODEL 3196ST SIZE 1x1-1/2-6
R. P. M. 3500 IMPLR. DIA. 3-1/2"
BRAKE HORSEPOWER
EFFICIENCY - PERCENT
TOTAL HEAD - FT.
HEAD
CAPACITY
EFFICIENCY
BHP @ 1.0 S.G.
CAPACITY - U.S. GALLONS PER MINUTE
0
20
40
60
80

10 CFR 50.55a Request Number P-002

Categorization of the Residual Heat Removal Pumps as Group A/B

Proposed Alternative
In Accordance with 10CFR50.55a(a)(3)(i)

Alternative Provides an Acceptable Level of Quality and Safety

ASME Code Component(s) Affected

3RHS*P1A	Residual Heat Removal (RHR) Pump A
3RHS*P1B	Residual Heat Removal (RHR) Pump B

Applicable Code Edition and Addenda

ASME OM Code 2001 Edition through 2003 Addenda

Applicable Code Requirement(s)

ISTB-1400(b), "identify each pump to be tested in accordance with the rules of this subsection and categorize it as either a Group A or Group B pump and list the pumps in the plant records (see ISTB-9000). A pump that meets both Group A and Group B definitions shall be categorized as a Group A pump."

Reason for Request

Pursuant to 10 CFR 50.55a, "Codes and Standards", paragraph (a)(3)(i), relief is requested from the requirement of ASME OM Code ISTB-1400(b). This relief will result in testing the RHR pumps as Group B during power operations versus Group A. This proposed relief will result in a lower potential for pump degradation due to pump wear while still being capable of measuring pump performance. The basis of the relief request is that the proposed alternative would provide an acceptable level of quality and safety.

The RHR pumps meet the categorization requirements of Group A pumps in that they are operated routinely during plant shutdowns and refueling outages. However, these pumps also meet the requirements of Group B, in that during normal operation (reactor critical) they are not operated except for testing.

These pumps are centrifugal type pumps required for low-pressure safety injection and to provide reactor core cooling during the cool down phase of shutdown cooling. During normal power operations, the RHR pump is in a standby condition and is considered an essential part of the Emergency Core Cooling System (ECCS). The pump starts automatically upon receipt of a safety injection (SI) signal taking suction from the Refueling Water Storage Tank (RWST) during the injection phase of an accident. The pump discharges to the reactor coolant system (RCS).

10 CFR 50.55a Request Number P-002

ASME ISTB-1400(b) states that if a pump meets both Group A and Group B definitions, it shall be categorized as a Group A pump. The RHR pumps are currently tested during normal operation, using the minimum flow recirculation loop.

The design accident flow rate of each RHR pump is approximately 4000 gpm. This flow rate can only be achieved during shutdown periods when injection into the RCS at a reduced pressure is possible.

Classifying these pumps as Group B during power operation minimizes the time required to perform quarterly testing. The 2001/2003 ASME Code testing requirements eliminate the two minute minimum pump run-time for quarterly Group B pump tests. Eliminating the minimum pump run-time requirement and the requirement to record flow and vibration levels is expected to reduce the length of each quarterly pump test and the accompanying unavailability time for these pumps. Since these pumps are not operated routinely during plant operation, except for required surveillance testing, there is no time or wear related degradation mechanism that would warrant performing more detailed quarterly tests on the RHR pumps.

NUREG/CP-0137, Vol. 1, Proceedings of the Third NRC/American Society of Mechanical Engineers (ASME) Symposium on Valve and Pump Testing, includes a paper entitled, "Description of Comprehensive Pump Test Change to ASME Code, Subsection ISTB." This paper details the philosophy of classifying pumps as Group A or Group B. According to the author, the intent of having different test requirements for different pump groups is to relate the requirements for the amount and degree of quarterly performance monitoring to the amount of degradation expected based on pump operation.

Testing the RHR pumps quarterly as Group A pumps during power operation is contrary to the philosophy of the referenced paper. Quarterly Group A testing subjects these pumps to increased test requirements and performance monitoring. Also, this testing introduces the potential for more degradation due to pump wear (caused by low-flow operation) at the time when they are standby pumps and would not otherwise be subject to operation-induced degradation. Group A testing during power operation may be more detrimental to the long-term health of these components than Group B testing.

Proposed Alternative and Basis for Use

Millstone proposes that the RHR pumps (3RHS*P1A and 3RHS*P1B) be tested as standby pumps (Group B) during power operation and as continuously operating pumps (Group A) during refueling operations. During refueling operations, the Comprehensive pump test may be substituted for a quarterly Group A test that comes due. Millstone further proposes that any time a Comprehensive pump test is performed; the code-required quarterly low-flow test (Group B) requirement may be deleted for that quarter.

10 CFR 50.55a Request Number P-002

Using the provisions of this relief request as an alternative to the specific requirements of ISTB-1400(b) identified above will provide adequate indication of pump performance and continue to provide an acceptable level of quality and safety. Therefore, pursuant to 10 CFR 50.55a(a)(3)(i) relief is requested from the specific ISTB requirements identified in this request.

This alternative provides an acceptable level of quality and safety.

Duration of Proposed Alternative

This proposed alternative will be utilized for the third 10-year interval.

Precedents

Similar relief requests were previously approved;

PR-12 was previously approved for Calvert Cliffs Nuclear Power Plant on May 16, 2002 (TAC Nos. MB3782 and MB3783)

PR-04 was previously approved for Three Mile Island on July 7, 2005 (TAC No.MC2558)

10 CFR 50.55a Request Number P-003

Use of Code Case OMN-6 for Digital Instruments

Proposed Alternative
In Accordance with 10CFR50.55a(a)(3)(i)

Alternative Provides an Acceptable Level of Quality and Safety

ASME Code Component(s) Affected

Various digital instruments used for IST of pumps

Applicable Code Edition and Addenda

ASME OM Code 2001 Edition through 2003 Addenda

Applicable Code Requirement(s)

ISTB-3510(b)(2), "digital instruments shall be selected such that the reference value does not exceed 70% of the calibrated range of the instrument."

Reason for Request

Pursuant to 10 CFR 50.55a, "Codes and Standards", paragraph (a)(3)(i), relief is requested from the requirement of ASME OM Code ISTB-3510(b)(2). This request is to allow the use of ASME Code Case OMN-6, Alternate Rules for Digital Instruments.

Code Case OMN-6 allows the use of digital instruments where the reference value does not exceed 90% of the calibrated range of the instrument. Code Case OMN-6 applies to the 1990 Edition through the 1997 Addenda. Millstone will implement the 2001 Edition through 2003 Addenda of the ASME OM Code for its third 10-year interval.

Proposed Alternative and Basis for Use

By using Code Case OMN-6, greater flexibility in the selection of instruments would be achieved, thus preventing the installation of multiple instruments to monitor the same parameter during testing. Digital instruments will be selected such that the reference value does not exceed 90 percent of the calibrated range of the instrument.

NUREG-1482, Revision 1, Section 5.5 states that....."The NRC has accepted Code Case OMN-6 as specified in Reg Guide 1.192, which allows each digital instrument to be such that the reference values do not exceed 90 percent of the calibrated range of the instrument."

Use of Code Case OMN-6, approved by the NRC in Reg Guide 1.192, will provide at least equivalent instrumentation accuracy requirements for the required pump testing parameters to be measured in the IST program and will provide results consistent with code requirements. This will provide adequate assurance of acceptable pump performance.

10 CFR 50.55a Request Number P-003

Using the provisions of this relief request as an alternative to the specific requirements of ISTB-3510(b)(2) identified above will provide adequate indication of pump performance and continue to provide an acceptable level of quality and safety. Therefore, pursuant to 10 CFR 50.55a(a)(3)(i) relief is requested from the specific ISTB requirements identified in this request.

This alternative provides an acceptable level of quality and safety.

Duration of Proposed Alternative

This proposed alternative will be utilized for the third 10-year interval.

Precedents

Similar relief requests were previously approved;

P-RR-3 was previously approved for Diablo Canyon Power Plant on January 30, 2006 (TAC Nos. MC6632 and MC6633)

RP07 was previously approved for Columbia Generating Station on March 23, 2007 (TAC Nos.MD3537, MD3538, MD3539, MD3541, MD3542, MD3550, MD3551 and MD3552)

10 CFR 50.55a Request Number P-004

Use of Code Case OMN-9 for Use of Pump Curves

Proposed Alternative
In Accordance with 10CFR50.55a(a)(3)(i)

Alternative Provides an Acceptable Level of Quality and Safety

ASME Code Component(s) Affected

3CCP*P1A	Reactor Building Closed Cooling Water (CCP) Pump A
3CCP*P1B	Reactor Building Closed Cooling Water (CCP) Pump B
3CCP*P1C	Reactor Building Closed Cooling Water (CCP) Pump C

Applicable Code Edition and Addenda

ASME OM Code 2001 Edition through 2003 Addenda

Applicable Code Requirement(s)

ISTB-5121 requires that "Group A tests shall be conducted with the pump operating at a specified reference point."

Reason for Request

Pursuant to 10 CFR 50.55a, "Codes and Standards", paragraph (a)(3)(i), relief is requested from the requirements of ASME OM Code ISTB-5121. Specifically this request is to allow the use of ASME Code Case OMN-9, Use of a Pump Curve for Testing.

Code Case OMN-9 allows the use of a pump curve for testing versus operation of the pump at a specified reference point. Code Case OMN-9 applies to the 1990 Edition through the 1992 Addenda. Millstone will implement the 2001 Edition through 2003 Addenda of the ASME OM Code for its third 10-year interval.

Proposed Alternative and Basis for Use

The CCP pumps provide cooling flow for heat removal capabilities for the Nuclear Steam Supply System (NSSS) supplied equipment and Balance of Plant (BOP) equipment.

Two CCP pumps are required to be operable in Modes 1 through 4. Testing of the third pump requires manipulation of two trains of CCP to balance flow rates and reduces the chance of lifting a pressure relief valve.

Performance of a Group A test while in normal plant configuration will eliminate the need to start the third pump and balance flows between trains.

10 CFR 50.55a Request Number P-004

The CCP pumps will be tested in a range of flows, and the results will be compared to acceptance criteria based on a portion of the pump curve and the hydraulic acceptance criteria given in ISTB. The guidelines set forth in Code Case OMN-9; "Use of a Pump Curve for Testing" will be followed. In accordance with the RG 1.192, the following elements will be incorporated into the IST test procedures and curve(s) development:

1. Curves are developed, or manufacturer's pump curves are validated, when the pumps are known to be operating acceptably.
2. The reference points used to develop or validate the curves are measured using instruments at least as accurate as required by the code.
3. Curves are based on an adequate number of data points, with a minimum of three.
4. Points are beyond the "flat" portion (low rates of the curve in a range which includes or is as close as practicable to design basis flow rates).
5. Acceptance criteria based on the curves does not conflict with technical specifications or Facility Safety Analysis Report (FSAR) operability criteria for flow rate and differential pressure for the affected pumps.
6. If vibration levels vary significantly over the range of pump conditions, a method for assigning appropriate vibration acceptance criteria should be developed for regions of the pump curve.
7. When the reference curve may have been affected by repair, replacement, or routine service, a new reference curve shall be determined or the previous curve revalidated by IST.

Using the provisions of this relief request as an alternative to the specific requirements of ISTB-5121 identified above will provide adequate indication of pump performance and continue to provide an acceptable level of quality and safety. Therefore, pursuant to 10 CFR 50.55a(a)(3)(i) relief is requested from the specific ISTB Code requirements identified in this relief request.

Duration of Proposed Alternative

This proposed alternative will be utilized for the third 10-year interval.

Precedents

This relief request was approved by the NRC in their safety evaluation entitled "Surry Power Station, Units 1 and 2 – American Society of Mechanical Engineers Inservice Testing Program (TAC NOS. MC0120 Through MC0146)" dated July 2, 2004.

ATTACHMENT 4.4

VALVE RELIEF REQUEST INDEX

Relief Request No.	Description	NRC Approval Date
V-001	Containment Recirc Cooler Isolation Valves Exercise Frequency	

ATTACHMENT 4.5

VALVE RELIEF REQUESTS

10 CFR 50.55a Request Number V-001

Containment Recirc Cooler Isolation Valves Exercise Frequency

Proposed Alternative
In Accordance with 10 CFR 50.55a(a)(3)(i)

Alternative Provides Acceptable Level of Quality and Safety

ASME Code Component(s) Affected

Valve Number	Class	Category	Description
3SWP*MOV54A	3	B	Service Water to Containment Recirc Cooler Isolation Valve
3SWP*MOV54B	3	B	Service Water to Containment Recirc Cooler Isolation Valve
3SWP*MOV54C	3	B	Service Water to Containment Recirc Cooler Isolation Valve
3SWP*MOV54D	3	B	Service Water to Containment Recirc Cooler Isolation Valve

Applicable Code Edition and Addenda

ASME OM Code 2001 Edition through 2003 Addenda

Applicable Code Requirement

ISTC-3510 Exercising Test Frequency. Active Category A, Category B, and Category C check valves shall be exercised nominally every three months, except as provided by ISTC-3520, ISTC-3540, ISTC-3550, ISTC-3560, ISTC-5221, and ISTC-5222.

Reason for Request

Pursuant to 10 CFR 50.55a, "Codes and Standards", paragraph (a)(3)(i), relief is requested from the requirement of ASME OM Code ISTC-3510, Exercising Test Frequency. ISTC-3510 requires exercise testing to be performed on a quarterly frequency, or at cold shutdown or refueling as allowed by ISTC-3521.

The basis of the relief request is that the proposed alternative would provide an acceptable level of quality and safety.

10 CFR 50.55a Request Number V-001

Proposed Alternative and Basis for Use

Due to the complexity of exercising these valves, it is proposed that the testing frequency be once every six months with a 25% grace period to allow for scheduling flexibility.

Testing the valves quarterly imposes undue burden on plant equipment availability, while the alternate frequencies listed in ISTC-3521 may be excessive.

Testing the valves is a complex evolution requiring an interlock associated with 3SWP*MOV50A/B to be defeated (temporary modification). This action allows opening the 3SWP*MOV54s without a Containment Depressurization Actuation (CDA) signal present. Entry into Limiting Condition for Operation (LCO) 3.7.4 during Modes 1 through 4 is required for the duration the temporary modification is installed to defeat the interlock. This makes one train of Containment Recirculation Spray (RSS) and Service Water System (SWP) inoperable. When the valves are opened, service water is introduced into the RSS heat exchangers, which is then required to be drained, the heat exchangers flushed with demineralized water, and then drained again. This process takes approximately 8-10 hours per heat exchanger. This results in accruing a significant amount of Maintenance Rule unavailability on RSS, and additional time on SWP.

The valves were originally scheduled for IST each cold shutdown (Modes 5 and 6). During cold shutdown, the LCO is not applicable however defeating the interlock in Modes 1 through 4 every six months to allow RSS heat exchanger flushing was evaluated and determined acceptable from a plant risk perspective. The flushing evolution provides the ideal opportunity to perform the stroke time and position indication tests without additional plant risk.

Millstone committed to perform these flushes (LER 95-011-00, Letter MP-95-186) at specific times throughout the year to minimize the vulnerability from plantigrade attachment. The flushes are scheduled to minimize the potential for large mussel colony infestation of upstream piping and subsequent heat exchanger fouling. Ideally, the flushes would be performed in late spring and early fall. This testing however, is less frequent than the code-specified quarterly testing. The ASME OM Code does not identify any other frequency during power operation only deferrals to cold shutdown or refueling are permitted.

Duration of Proposed Alternative

This proposed alternative will be utilized for the third 10-year interval.

Precedents

This relief request was previously approved for a similar request in second 10-year interval at MPS2 as V-004, dated February 2, 2001 (TAC No. MA9336).

ATTACHMENT 4.6

ALTERNATE TEST JUSTIFICATION (ATJ) INDEX

Alt. Test Justification No.	Description
ATJ-001	Safety Injection Check Valves
ATJ-002	Volume Control Tank Outlet Isolation Valves
ATJ-003	Boric Acid Tank Gravity Boration Valves
ATJ-004	Reactor Coolant Pump Seal Water Containment Isolation Valves
ATJ-005	Letdown Containment Isolation Valves
ATJ-006	Feedwater Isolation Valves
ATJ-007	Containment Purge Isolation Valves
ATJ-008	Instrument Air Containment Isolation Valves
ATJ-009	Main Steam Isolation Valves
ATJ-010	Auxiliary Feedwater Control Valves
ATJ-011	Safety Injection Isolation Valves
ATJ-012	Power Operated Relief Valves
ATJ-013	Reactor Vent Valves
ATJ-014	Residual Heat Removal Isolation Valves
ATJ-015	Residual Heat Removal Train Connection Valves
ATJ-016	Refueling Water Storage Tank Check Valve
ATJ-017	Charging Isolation Valves
ATJ-018	Refueling Water Storage Tank Isolation Valve
ATJ-019	Safety Injection Minimum Flow Isolation Valve
ATJ-020	Cold Leg Safety Injection Isolation Valve
ATJ-021	Cold Leg Residual Heat Removal Check Valves
ATJ-022	Cold Leg Residual Heat Removal Isolation Valves
ATJ-023	Hot Leg Safety Injection Isolation Valves
ATJ-024	Safety Injection Accumulator Isolation Valves
ATJ-025	Reactor Plant Component Cooling Heat Exchanger Isolation Valves
ATJ-026	Charging Loop Isolation Valves
ATJ-027	Letdown Orifice Isolation Valves
ATJ-028	Reactor Coolant Pump Thermal Barrier Isolation Valves
ATJ-029	Residual Heat Removal Suction Check Valves
ATJ-030	Charging Header Isolation Valve

ALTERNATE TEST JUSTIFICATION (ATJ) INDEX (CONT'D)

Alt. Test Justification No.	Description
ATJ-031	Letdown Pressure Isolation Valves
ATJ-032	Chilled Water Isolation Valves
ATJ-033	Temperature Control Valves
ATJ-034	Chilled Water Bypass Isolation Valves
ATJ-035	Main Steam Isolation Bypass Valves
ATJ-036	Containment Recirculation Spray to Residual Heat Removal Connection Valves
ATJ-037	Charging Minimum Flow Isolation Valves
ATJ-038	Fire Protection Isolation Valves
ATJ-039	RSS Pump Casing Vent Valves

ATTACHMENT 4.7

ALTERNATE TEST JUSTIFICATIONS

Alternate Test Justification ATJ-001

ASME Code Component(s) Affected

3SIH*V110	3SIH*V112	3SIL*V027
3SIL*V029	3SIL*V984	3SIL*V985
3SIL*V986	3SIL*V987	

Category AC

Class 1

Safety Function

These valves must open to allow injection from the accumulator and RHR pumps. These valves must close to provide RCS pressure boundary and isolate the RCS from the upstream low-pressure piping.

Justification

These check valves are normally closed during operation. Exercising these valves during operation is not possible since RCS pressure (2250 psig) is greater than the operating pressures of the High-Pressure Safety Injection (SIH) (1520 psig) and RHR (200 psig) pumps. These valves are required to be tested per plant Technical Specification 4.4.6.2.2 whenever the valves are open, at least once every 24 months, prior to entering Mode 2 whenever the plant has been in cold shutdown for seven days or more, and if leakage testing has not been performed in the previous nine months. The surveillance requirements for RCS pressure isolation valves provide assurance of valve integrity thereby reducing the probability of gross valve failure and consequent inter system Loss of Coolant Accident (LOCA).

Alternative Frequency

These valves will be closure and leak tested during cold shutdown per plant Technical Specification 3/4.4.6 and ISTC-3522(b).

Alternate Test Justification ATJ-002

ASME Code Component(s) Affected

3CHS*LCV112B
3CHS*LCV112C

Category A

Class 2

Safety Function

These valves must automatically close on an SI signal to isolate the Volume Control Tank (VCT) from the charging pump suction. They must remain closed post LOCA to isolate contaminated recirculated sump fluid to the RWST. These valves are also closed for SGCS.

Justification

Stroke testing of these valves during power operation would result in a disruption of normal charging flow and cause loss of suction pressure to an operating charging pump. This could give rise to a loss of pressurizer level control, resulting in a plant trip. Use of the alternate pump suction source may result in injecting high concentrations of boric acid into the RCS.

Alternative Frequency

These valves will be stroke time closure tested during cold shutdowns per ISTC-3521(c).

Alternate Test Justification ATJ-003

ASME Code Component(s) Affected

3CHS*MV8507A
3CHS*MV8507B

Category B

Class 2

Safety Function

These valves must open to provide a gravity feed emergency boration flowpath. These valves must remain closed during operation to prevent diversion of ECCS flow.

Justification

In order to line up the charging system to permit exercising of these valves during power operation, it would be necessary to interrupt normal charging and letdown flow. Additionally, testing of these valves at power would result in uncontrolled boration of the RCS with the reactor critical. A rapid boration would introduce a large amount of negative reactivity to the RCS causing a plant shutdown.

Alternative Frequency

These valves will be stroke time open tested during cold shutdowns when the reactor is shutdown per ISTC-3521(c).

Alternate Test Justification ATJ-004

ASME Code Component(s) Affected

3CHS*MV8100
3CHS*MV8109A
3CHS*MV8109B
3CHS*MV8109C
3CHS*MV8109D
3CHS*MV8112

Category A

Class 2

Safety Function

These valves must remain open to allow flow for SGCS. These valves must close to isolate the Reactor Coolant Pump (RCP) seal injection line to provide containment isolation for Penetrations Z19, 17, 16, and 18 and to isolate a seal line break outside containment.

Justification

Plant operating procedures (per Westinghouse Technical Manual) requires No. 1 seal return flow to be maintained whenever RCS pressure exceeds 100 psig. Isolating these valves during plant operation or cold shutdown in which the RCS is pressurized could damage the RCP seals.

Alternative Frequency

Seal supply valves will be stroke time closure tested during cold shutdowns when the associated loop is drained. The seal return valves will be stroke time closure tested during cold shutdowns when RCS pressure is less than 100 psig and the seal return lines can be isolated. These alternatives are in accordance with ISTC-3521(c).

Alternate Test Justification ATJ-005

ASME Code Component(s) Affected

3CHS*CV8152
3CHS*CV8160
3CHS*MV8105
3CHS*MV8106

Category A

Class 2

Safety Function

These valves must automatically close on a Containment Isolation Phase A (CIA) signal to isolate the letdown flowpath and to provide containment isolation for Penetration Z24.

Justification

The purpose of the charging and letdown subsystems of the Chemical and Volume Control System (CVCS) is to establish a programmed water level in the pressurizer to maintain proper RCS inventory and proper chemical control of the RCS. Full stroke exercising these valves on a quarterly basis during power operation could cause a loss of pressurizer level control and possibly a reactor trip. The plant is designed with a limited number of letdown isolation thermal cycles. As letdown is disrupted, the charging water to the RCS is no longer heated up and causes a thermal cycle on the hot leg to the RCS.

Alternative Frequency

These valves will be stroke time closure and failure tested during cold shutdown per ISTC-3521(c).

Alternate Test Justification ATJ-006

ASME Code Component(s) Affected

3FWS*CTV41A	3FWS*CTV41B	3FWS*CTV41C
3FWS*CTV41D	3FWS*FCV510	3FWS*FCV520
3FWS*FCV530	3FWS*FCV540	

Category B

Class 2

Safety Function

These valves must close to isolate the Main Feedwater System (FWS) to prevent rapid RCS heatup or cooldown and isolate containment from the FWS.

Justification

Stroke testing these valves closed during power operation would temporarily secure flow to an operating steam generator and potentially lead to a reactor trip on low steam generator water level.

Alternative Frequency

These valves will be stroke time closure and failure position tested during cold shutdowns per ISTC-3521(c).

Alternate Test Justification ATJ-007

ASME Code Component(s) Affected

3HVU*CTV32A
3HVU*CTV32B
3HVU*CTV33A
3HVU*CTV33B

Category A

Class 2

Safety Function

These valves must close to isolate containment from the containment purge system.

Justification

These valves are required by Technical Specification 3.6.1.7 to be locked closed during Modes 1,2,3, and 4.

Alternative Frequency

These valves will be stroke time closure and failure tested during cold shutdowns per ISTC-3521(c).

Alternate Test Justification ATJ-008

ASME Code Component(s) Affected

3IAS*MOV72
3IAS*PV15

Category A

Class 2

Safety Function

These valves must close to isolate containment from the Instrument Air System (IAS).

Justification

These valves isolate the entire inside-containment IAS from their normal source outside containment. Full stroke testing of these valves during power operation would cause a complete loss of instrument air inside containment. As a result, all valves inside containment supplied by instrument air would stroke to their fail-safe position resulting in a plant shutdown.

Alternative Frequency

These valves will be stroke time closure tested during cold shutdowns per ISTC-3521(c).

Alternate Test Justification ATJ-009

ASME Code Component(s) Affected

3MSS*CTV27A
3MSS*CTV27B
3MSS*CTV27C
3MSS*CTV27D

Category B

Class 2

Safety Function

These valves must close to isolate the main steam flow path from its associated steam generator.

Justification

Full stroking these valves to the closed position during Modes 1 or 2 would result in an unbalanced steam flow condition producing an abnormal power distribution in the reactor core, possibly causing a reactor trip. Therefore, full close stroking of these valves for the purpose of testing is performed in Modes 3 or 4, per Technical Specification 3.7.1.5.

Alternative Frequency

These valves will be stroke time closure and failure tested during cold shutdowns per ISTC-3521(c).

Alternate Test Justification ATJ-010

ASME Code Component(s) Affected

3FWA*HV36A
3FWA*HV36B
3FWA*HV36C
3FWA*HV36D

Category B

Class 2

Safety Function

These valves must open to provide a flow path from the turbine-driven Auxiliary Feedwater (FWA) pump to the valve's associated steam generator. These valves must close to isolate a faulted steam generator on a Main Steam Line Break (MSLB) or steam generator tube rupture. These valves must also close to isolate containment from the FWA system.

Justification

Based on condition report (CR) M3-99-4132 / 4135 investigation and as documented in Technical Evaluation M3-EV-00-0013 Rev. 1, these valves, as currently configured, are susceptible to sluggish or incomplete closure when tested under static conditions. The Technical Evaluation states that "... these valves have a sensitive force balance and require a consistent test arrangement, with flow through the valve, to provide repeatable test results." To establish flow through these valves, two options were evaluated. One method is to feed forward with the auxiliary feedwater pumps. The other method is to establish a gravity drain flow path from the Demineralized Water Storage Tank (DWST) through a vent valve on the motor driven auxiliary feedwater pump discharge header. Feeding forward to the steam generators is not desirable since the cooler water in the DWST may result in a thermal shock to the steam generator feedwater nozzles, as well as introduce oxygenated water. The gravity drain flow path method results in two auxiliary feedwater pumps being declared inoperable for the duration of the test. This places the unit in a very unfavorable condition requiring entry into a six hour Technical Specification Action Statement (TSAS) 3.7.1.2.b. Based on the negative safety implications of two inoperable auxiliary feedwater pumps, the potential for steam generator nozzle damage, and the limited benefit gained from stroke time measurements, the test methods that would allow for quarterly full stroke exercising and stroke time measurement, are not practical.

Alternative Frequency

These valves will be stroke time open, stroke time closure and failure tested during cold shutdowns per ISTC-3521(c).

Alternate Test Justification ATJ-011

ASME Code Component(s) Affected

3SIH*V110
3SIH*V112
3SIL*V027
3SIL*V029

Category AC

Class 1

Safety Function

These valves must open to provide a flow path from the Safety Injection System (SIS) pumps to the RCS. These valves must close to isolate the RCS from the SIS.

Justification

The only flow path available to perform a full flow exercise of these valves is by injection to the RCS. Full flow testing of these valves at power is not possible because the shutoff head of the SIH pumps (1520 psig) is insufficient to overcome RCS operating pressure. Full flow testing at cold shutdown could result in over-pressurization of the RCS. While ¾-inch test lines are available which could be used to partially stroke the 2-inch diameter Low-Pressure Safety Injection (SIL) and SIH valves, these lines do not have sufficient capacity to provide a meaningful part stroke exercise since disk movement resulting from such an exercise would be negligible. Such an exercise would also require containment entry and isolation of the cold leg injection lines (Train A for SIL*V27 and V29, Train B for SIH*V110 and V112), both of which are undesirable activities when SI is required. Furthermore, these are pressure isolation valves that are required by Technical Specification 4.4.6.2.2 to be leak tested within 24 hours following any valve opening during reactor operation. Opening them by partial stroke testing during operation or cold shutdown increases the potential for their failure to close as required, which would result in a loss of RCS pressure boundary integrity and force the unit to shut down or remain shut down until repairs could be completed. The potential adverse impact on safety that would result from partially exercising these valves when the SI function is required, is more significant that the marginal increase in safety that may be achieved by quarterly or cold shutdown partial stroke testing.

Alternate Test Justification ATJ-011

Alternative Frequency

These valves will be full stroke open exercised during refueling outages when the reactor vessel head is removed per ISTC-3522(c). The valves will be monitored using non-intrusive techniques in accordance with the recommendations of NUREG 1482, Section 4.1.2.

Non-intrusive testing will monitor the open capability for check valves in each injection flow path in conjunction with a full flow test monitored at the pump discharge. The non-intrusive technique will provide a positive means to verify valve opening and disc travel change. The full flow will be verified at the pump discharge flow element. Non-intrusive testing will be performed on check valves in each flow path on a staggered sample basis. In the event that inconclusive non-intrusive data is obtained, the second check valve in the series injection flow path will be tested.

Alternate Test Justification ATJ-012

ASME Code Component(s) Affected

3RCS*PCV455A
3RCS*PCV456

Category B

Class 1

Safety Function

These valves must open to provide a flow path from the pressurizer to the pressurizer relief tank.

Justification

Full stroke exercising of these valves during power operation is counter-productive. The valves are required for SGCS over pressure protection. These valves are available at power to lift and reduce pressure transients and challenges to the pressurizer safety valves. Experience at Millstone has shown that frequent operation of the Power-Operated Relief Valves (PORVs) can cause seat leakage. Damage (i.e., seat leakage) results in closure of the PORV block valve, which is allowed by technical specifications. Isolating the PORV increases the potential for challenges to the pressurizer safety valves. These valves are a unique design with no water seal upstream of the PORV, which exposes the relief valve seat to high temperature steam. PORV testing performed by Electric Power Research Institute (EPRI) in 1982 has verified this valve design will leak after frequent cycling.

Previous testing at power has identified no failure of the stroke time testing. Testing at cold shutdown does not provide accurate indication of stroke time because valve indication is adjusted at operating temperature and does not accurately indicate the open position at reduced temperatures.

Alternative Frequency

These valves (PV455A and PV456) will be stroke time open tested, failure tested, and operated through one complete cycle of travel at least once per 24 months during Mode 3, 4 or 5. This is consistent with the required testing of Technical Specification 4.4.4.1.b and ISTC-3521(d).

If a valve is replaced, a full stroke test will be performed in Mode 4 prior to returning the plant to service. In addition, a stroke test in the open direction may be performed in Mode 5, if the valve is required to be operable to provide cold overpressure protection. (Reference, MPS3 Technical Specification 3.4.9.3).

Alternate Test Justification ATJ-013

ASME Code Component(s) Affected

3RCS*HCV442A	3RCS*HCV442B	3RCS*SV8095A
3RCS*SV8095B	3RCS*SV8096A	3RCS*SV8096B

Category B

Class 2

Safety Function

These valves must open to provide a flow path from the reactor to the pressurizer relief tank. These valves must close to isolate the reactor from the pressurizer relief tank.

Justification

These are Target Rock pilot-assisted valves, which require pressure assist to function properly. When they are stroked during power operation, the entrained reactor coolant flashes and causes steam cutting damage to the seating surfaces, which results in valve leakage. While such conditions do not present a concern for nuclear safety, they do impact plant operation in that unit shutdown is then required to affect repairs.

Alternative Frequency

These valves will be stroke time open and closed tested during cold shutdowns when the reactor coolant will not flash and damage the valves' seating surfaces. This is consistent with TRM Section 4.4.11.1 requirements and ISTC-3521(c).

Alternate Test Justification ATJ-014

ASME Code Component(s) Affected

3RHS*MV8701A	3RHS*MV8701B	3RHS*MV8701C
3RHS*MV8702A	3RHS*MV8702B	3RHS*MV8702C

Category A

Class 1

Safety Function

These valves must open for long-term core cooling during a SGCS. These valves must close to prevent backflow from the RSS pump during the recirculation phase of a LOCA.

Justification

Stroke testing of these valves at power is not possible. MV8701A/B and MV8702A/B are interlocked to prevent operation (opening) when the RCS pressure is above 375 psig. Full stroke exercising MV8701C and MV8702C poses unnecessary exposure to a low pressure system LOCA. These valves are RCS pressure isolation valves that are required to be closed per Technical Specification 3.4.6.2 and are leak tested within 24 hours after operation. In order to leak test these valves, a containment entry (personnel safety risk; radiation exposure) is required, and any leakage through these valves flashes to steam and must be vented to containment atmosphere (hydrogen and radioactive gaseous problem).

Alternative Frequency

These valves will be stroke time open and closure tested during cold shutdowns per ISTC-3521(c).

Alternate Test Justification ATJ-015

ASME Code Component(s) Affected

3RHS*MV8716A
3RHS*MV8716B

Category B

Class 2

Safety Function

These valves must open to provide a cross tie between the Residual Heat Removal (RHR) system trains. These valves must close to align the SIS for cold leg recirculation.

Justification

Full stroke exercising these valves closed during power operation would render the RHR system inoperable by isolating two of the four cold leg injection paths to the RCS from RHR.

Alternative Frequency

These valves will be stroke time closure tested during cold shutdowns per ISTC-3521(c).

Alternate Test Justification ATJ-016

ASME Code Component(s) Affected

3SIH*V011

Category AC

Class 1

Safety Function

This valve must open to provide a flow path from the RWST to the SIH pumps. This valve must close to isolate the RWST from the SIH pump suction piping.

Justification

There is no flow path available to full stoke test this valve during power operations, since the SIH pumps do not develop sufficient head to overcome RCS pressure. Full stroke testing should not be performed during cold shutdown because the required flow would risk over pressurization of the RCS. There is no practical flow path to verify closure of this valve by normal reverse flow testing. Closure is verified by non-intrusive techniques (acoustic signature, etc.) or leakage testing during refueling outages. Since a full stroke is required to obtain meaningful data during non-intrusive testing, closure testing cannot be performed during the part stroke exercising performed during operation and cold shutdowns.

Alternative Frequency

Full stroke open and closure testing will be performed during refueling outages when the reactor closure head is removed per ISTC-3522(c). Closure capability will be verified using non-intrusive techniques to monitor disc movement or leakage testing during refueling outages.

Alternate Test Justification ATJ-017

ASME Code Component(s) Affected

3SIH*MV8801A
3SIH*MV8801B

Category A

Class 2

Safety Function

These valves must open to provide a flow path for the charging pumps to deliver water to the RCS cold legs. These valves must also open to provide an alternate charging path for achieving SGCS. These valves must close to isolate the containment from the charging pump discharge lines.

Justification

Stroke testing these valves during power operation would require disruption of normal charging flow and injection of non-preheated water into the RCS, resulting in thermal shock to the inlet nozzles.

Alternative Frequency

These valves will be stroke time open and closure tested during cold shutdowns per ISTC-3521(c).

Alternate Test Justification ATJ-018

ASME Code Component(s) Affected

3SIH*MV8806

Category B

Class 2

Safety Function

This valve must remain open to provide a flow path from the RWST to the SIH pumps during the injection phase of a LOCA. This valve must close to isolate the RWST from the SIH pump suction piping.

Justification

This valve is in the position required during the initial phases of an accident requiring SIH. The valve does not receive a safety signal, since realignment of the valve to the recirculation mode is accomplished by manual repositioning. Testing of this valve during power operation would place it in a non-conservative position, temporarily disabling both SI trains by isolating the common suction from the RWST, and possibly causing damage to both pumps if an SI were to occur. If required, the valve can be repositioned locally so that deferring the testing of this valve to cold shutdown would not compromise plant safety.

Alternative Frequency

These valves will be stroke time closure tested during cold shutdowns per ISTC-3521(c).

Alternate Test Justification ATJ-019

ASME Code Component(s) Affected

3SIH*MV8813

Category B

Class 2

Safety Function

This valve must remain open to provide a minimum flow path from the SIH pump to the RWST. This valve must close to isolate the RWST from the SIH pump discharge.

Justification

Full stroke exercising of 3SIH*MV8813 closed during power operation would isolate both pumps minimum flow lines. In addition, failure of this valve closed during power operations, coincident with a SI signal and a pressurized RCS system, would deadhead the pumps. While such an event is unlikely, it is considered credible. Additionally, this valve is required to be open with power removed from the operator during Modes 1, 2, and 3 per Technical Specification 3/4.5.2 to ensure operability of this ECCS subsystem.

Alternative Frequency

These valves will be stroke time closure tested during cold shutdowns per ISTC-3521(c).

Alternate Test Justification ATJ-020

ASME Code Component(s) Affected

3SIH*MV8835

Category A

Class 2

Safety Function

This valve must remain open to provide a flow path from the SIH pumps to the RCS cold legs. This valve must close to isolate the RCS cold legs and containment from the SI system.

Justification

This valve is required to be open and power removed from the operator during Modes 1, 2 and 3 per Technical Specification 3/4.5.2 to ensure operability of this ECCS subsystem.

Alternative Frequency

These valves will be stroke time closure tested during cold shutdowns per ISTC-3521(c).

Alternate Test Justification ATJ-021

ASME Code Component(s) Affected

3SIL*V984
3SIL*V985
3SIL*V986
3SIL*V987

Category AC

Class 2

Safety Function

These valves must open to provide flow to the RCS cold leg during the injection phase of a LOCA. These valves must close to isolate containment from the RHR system.

Justification

There is no flow path available to test these valves during power operation with a pressure source capable of overcoming RCS pressure. The normal pressure sources that would be used during an accident to stroke the valves are the RHR pumps that develop a shut off head of only 200 pounds.

Alternative Frequency

These valves will be full stroke open tested during cold shutdown when the RHR system is in operation and flow to the parallel loops can be isolated per ISTC-3521(c).

Alternate Test Justification ATJ-022

ASME Code Component(s) Affected

3SIL*MV8809A
3SIL*MV8809B

Category A

Class 2

Safety Function

These valves must open to provide a flow path for the RHR system to inject into the RCS cold legs during the injection phase of a LOCA. Additionally, these valves must open to reestablish cold leg recirciculation flow path following certain passive failures within the ECCS piping.

These valves must close to align the RSS for hot and cold leg recirculation flow. Additionally, these valves must close to isolate the containment atmosphere from the Low Pressure Safety Injection (SIL) System.

Justification

These valves are required to be open with power removed from the operators during Modes 1, 2 and 3 per Technical Specification 3/4.5.2 to ensure operability of this ECCS subsystem.

Alternative Frequency

These valves will be stroke time open and closure tested during cold shutdown per ISTC-3521(c).

Alternate Test Justification ATJ-023

ASME Code Component(s) Affected

3SIH*MV8802A
3SIH*MV8802B

Category A

Class 2

Safety Function

These valves must open to provide a flow path from the SIH pumps to the RCS hot legs. These valves must close to isolate the RCS hot legs and containment from the SI system.

Justification

These valves are required to be closed with power removed from the operators during Modes 1, 2 and 3 per Technical Specification 3/4.5.2 to ensure operability of this ECCS subsystem.

Alternative Frequency

These valves will be stroke time open and closure tested during cold shutdown per ISTC-3521(c).

Alternate Test Justification ATJ-024

ASME Code Component(s) Affected

3SIL*MV8808A
3SIL*MV8808B
3SIL*MV8808C
3SIL*MV8808D

Category B

Class 2

Safety Function

These valves must open to provide a flow path for the Safety Injection Accumulator Tank to inject into the RCS cold leg. This valve must close to prevent nitrogen in Safety Injection Accumulator Tank from reaching the steam generator tubes following tank discharge during a MSLB event.

Justification

Technical Specification 3.5.1 and plant operating procedures require these valves to be open with power removed during Modes 1, 2 and 3, and specify quick and decisive action to reopen any valve that is closed or begin shutting the reactor down. The consequences of one of these valves failing closed during reactor operation are significant in that such an event would disable a portion of the SIL system and thereby reduce its capability to mitigate an accident. The negative consequences of such a potential failure are therefore determined to be more significant than the marginal increase in safety that may be accomplished by quarterly closure testing of these valves during power operation.

Alternative Frequency

These valves will be stroke time closure tested at cold shutdown frequency during either plant heatup or plant cool down per ISTC-3521(c).

Alternate Test Justification ATJ-025

ASME Code Component(s) Affected

3SWP*MOV50A
3SWP*MOV50B

Category B

Class 3

Safety Function

These valves must open to provide a flow path to the Reactor Plant Component Cooling (CCP) heat exchangers post-accident. These valves must close to isolate the CCP heat exchangers during a LOCA or High Energy Line Break (HELB) event inside containment.

Justification

Full stroke exercising either of these valves closed quarterly would isolate a CCP heat exchanger resulting in possible adverse equipment response to both safety related and non-safety related trains.

Alternative Frequency

These valves will be stroke time open and closure tested during cold shutdown per ISTC-3521(c).

Alternate Test Justification ATJ-026

ASME Code Component(s) Affected

3CHS*AV8146
3CHS*AV8147

Category B

Class 2

Safety Function

These valves must open to provide a flow path for charging flow during a SGCS.

Justification

These valves should not be full stroke exercised during operation because only one flow path is normally in service. Swapping the flow paths during operation causes an undesirable thermal transient in the idle injection nozzle and is not normally performed. The flow paths are therefore only swapped before start up from cold shutdowns of sufficient duration while the RCS temperature is near ambient.

Alternative Frequency

These valves will be stroke time open and failure tested during cold shutdown per ISTC-3521(c).

Alternate Test Justification ATJ-027

ASME Code Component(s) Affected

3CHS*AV8149A
3CHS*AV8149B
3CHS*AV8149C

Category B

Class 2

Safety Function

These valves must close to isolate the letdown line outside of containment.

Justification

These valves should not be full stroke exercised during operation because they are in the normal charging letdown flow path that provides inventory and chemistry control to the RCS. Diversion of flow could cause RCS inventory fluctuations.

Alternative Frequency

These valves will be stroke time closed and failure tested during cold shutdown per ISTC-3521(c).

Alternate Test Justification ATJ-028

ASME Code Component(s) Affected

3CCP*AOV178A
3CCP*AOV178B
3CCP*AOV178C
3CCP*AOV178D

Category B

Class 3

Safety Function

These valves must close to isolate the Reactor Coolant Pump (RCP) thermal barrier in the event of a tube leak.

Justification

These valves are in the flow path for the RCP seals thermal barrier cooling. Closing them during operation would cause a rapid heatup of the associated thermal barrier and the valve, possibly causing it to stick, ultimately resulting in seal damage and forced shutdown of the unit.

Alternative Frequency

These valves will be stroke time closure and failure tested during cold shutdowns when the RCPs are not operating per ISTC-3521(c).

Alternate Test Justification ATJ-029

ASME Code Component(s) Affected

3SIL*V003
3SIL*V009

Category AC

Class 2

Safety Function

These valves must open to provide a flow path for cooling water during the injection phase of a LOCA and for SGCS.

Justification

The RHR pumps have insufficient head (200 psig) to overcome RCS pressure during operation (2250 psig) for full flow testing, and there is no test line with sufficient capacity for full flow testing. Testing involves passing flow through two independent trains of RHR. During some cold shutdowns it may not be necessary to rely on both trains of RHR to maintain cold shutdown. Testing of the idle train check valves involves cycling upstream pressure isolation valves to allow flow through either the Loop 1 or 4 recirculation flow paths. Technical specifications then require leak testing these Pressure Isolation Valves (PIVs). This increased burden and challenge to PIVs does not warrant testing both trains each cold shutdown.

Alternative Frequency

One train of two valves will be full stroke tested open during cold shutdowns. Both trains will be full stroke tested each refueling outage per ISTC-3522(c).

Alternate Test Justification ATJ-030

ASME Code Component(s) Affected

3CHS*HCV182

Category B

Class 2

Safety Function

This valve must open to provide a flow path for borated water to the RCS for SGCS with a loss of control air or electrical power to valves in the borated water flow path.

Justification

Seal water flow provides continuous cooling of the seals during power operation to prevent seal damage due to high temperature and continuous flushing during shutdown periods to prevent the intrusion of foreign material. Full stroke exercising of these valves requires establishment of an alternate seal water flow path and simultaneous isolation of the normal flow path, at a controlled rate which will not cause the seals or other components in the flow path to be damaged by either high flow or by flow starvation. Establishment of the alternate flow is an off-normal evolution (EOP-related) that carries some risk of inadvertent isolation of seal flow. Such an event would have negligible consequences if it occurred for a short period of time when the reactor is not pressurized, but could have significant consequences if it occurred during power operation.

Alternative Frequency

This valve will be full stroke tested open during refueling and during cold shutdown when RCS pressure is less than 100 psig per ISTC-3521(c).

Alternate Test Justification ATJ-031

ASME Code Component(s) Affected

3RCS*LCV459
3RCS*LCV460

Category B

Class 1

Safety Function

These valves must close to isolate the RCS pressure boundary from the normal letdown line.

Justification

These valves should not be full stroke exercised during operation because they are in the normal charging letdown flow that provides inventory and chemistry control to the RCS. Diversion of flow could cause RCS inventory fluctuations.

Alternative Frequency

These valves will be stroke time closure and failure tested during cold shutdowns per ISTC-3521(c).

Alternate Test Justification ATJ-032

ASME Code Component(s) Affected

3CDS*CTV38A	3CDS*CTV38B	3CDS*CTV39A
3CDS*CTV39B	3CDS*CTV40A	3CDS*CTV40B
3CDS*CTV91A	3CDS*CTV91B	

Category A

Class 2

Safety Function

These valves must close to isolate containment from the Reactor Plant Chilled Water System (CDS).

Justification

Closing these valves during power operation requires the chillers be removed from service to prevent a chiller trip on low flow and potential equipment damage. With the chillers out of service, containment temperature rises quickly within an hour and this has the potential of placing the plant in an LCO requiring a unit shutdown.

Alternative Frequency

These valves will be stroke time closure and failure tested during cold shutdowns per ISTC-3521(c).

Alternate Test Justification ATJ-033

ASME Code Component(s) Affected

3HVK*TV39A	3HVK*TV39B	3HVK*TV41A
3HVK*TV41B	3HVK*TV76A	3HVK*TV76B
3HVK*TV77A	3HVK*TV77B	

Category B

Class 3

Safety Function

These valves must open to provide a chilled water flow path for the safety-related control room loads.

Justification

These temperature control valves utilize Target Rock solenoid valves that normally modulate temperature to the Control Building Chilled Water System (HVK) air handling unit coils. There are no control room switches to operate the valves to perform exercising. In addition there are no indicating lights in the control room for the valves. In order to exercise and stroke-time the valves, non-intrusive equipment is installed on the valves and fuses at the breaker panel are removed and reinstalled to fully open and close the valves. It is not practical to test the valves quarterly since setting up non-intrusive test equipment impacts plant resources and the removal and reinstallation of the fuses adversely impacts plant personnel safety and equipment reliability. The frequent removal and installation introduces an unnecessary wear on the fuse contacts. NUREG 1482 Section 3.1.1, "Deferring Valve Testing to Each Cold Shutdown or Refueling Outage," recognizes the use of non-intrusive equipment to test valves each quarter may be impractical. In addition, manual operator-action to restore the system would be required if an accident were to occur. Therefore it is concluded that the potential adverse impact on safety, equipment reliability and resources outweighs the marginal increase in safety that may be achieved by the quarterly testing.

Alternative Frequency

These valves will be failure tested during cold shutdowns using non-intrusive methods or other positive means per ISTC-3521(c).

Alternate Test Justification ATJ-034

ASME Code Component(s) Affected

3HVK*PDV32A
3HVK*PDV32B

Category B

Class 3

Safety Function

These valves must close to prevent diversion of cooling water flow.

Justification

These pressure control valves utilize Target Rock solenoid valves to maintain constant differential pressure across the HVK pumps. There are no control room switches to operate the valves to perform exercising. In addition, there are no indicating lights in the control room for the valves. In order to exercise and stroke time the valves, non-intrusive equipment is installed on the valves and fuses at the breaker panel are removed and reinstalled to fully open and close the valves. It is not practical to test the valves quarterly since setting up non-intrusive test equipment impacts plant resources and the removal and reinstallation of the fuses adversely impacts plant personnel safety and equipment reliability. The frequent removal and installation introduces an unnecessary wear on the fuse contacts. NUREG 1482 Section 3.1.1, "Deferring Valve Testing to Each Cold Shutdown or Refueling Outage," recognizes the use of non-intrusive equipment to test valves each quarter may be impractical. In addition, manual operator-action to restore the system would be required if an accident were to occur. Therefore it is concluded that the potential adverse impact on safety, equipment reliability and resources outweighs the marginal increase in safety that may be achieved by the quarterly testing.

Alternative Frequency

These valves will be failure tested during cold shutdowns using non-intrusive methods or other positive means per ISTC-3521(c).

Alternate Test Justification ATJ-035

ASME Code Component(s) Affected

3MSS*HV28A
3MSS*HV28B
3MSS*HV28C
3MSS*HV28D

Category B

Class 2

Safety Function

These valves must close to isolate the main steam flow path from its associated steam generator.

Justification

The MSIV bypass valves are normally closed and are opened during startups to warm up main steam lines and equalize pressure across the MSIVs. The safety function of the valves is to isolate non-safety related portions of the main steam under accident conditions and prevent uncontrolled blowdown of more than one steam generator in the event of a MSLB. The valves remain closed during the entire operating cycle, except for an 18-month slave relay test, and although they can be tested each quarter, it is considered a hardship since the risk of performing testing quarterly outweighs the benefit achieved. Testing quarterly versus cold shutdown does not provide any increase in safety since the valves are not called upon to change position during the cycle for any safety function and opening them for testing purposes only decreases safety by increasing the exposure to a condition where the valve must change position during accident conditions. In addition, testing during the cycle unnecessarily cycles the valves reducing the life expectancy of the components. Therefore, it is concluded that the potential adverse impact on safety, equipment reliability and resources constitute a hardship allowing cold shutdown stroke time testing to assure operational readiness.

Alternative Frequency

These valves will be stroke time closure and failure tested during cold shutdowns per ISTC-3521(c).

Alternate Test Justification ATJ-036

ASME Code Component(s) Affected

3RSS*MV8837A
3RSS*MV8837B
3RSS*MV8838A
3RSS*MV8838B

Category B

Class 2

Safety Function

These valves must open to provide a flow path from RSS to the RHR system. These valves must close to isolate the RSS system from the RHR system.

Justification

The valve test frequency is being changed because of the RSS pump test frequency change. The frequency test requirements for the RSS pumps changed by applying ISTB-3430 "Pumps lacking required fluid inventory" (i.e. Dry Sump). The test frequency changed from quarterly to once every two years (i.e., performed each refueling outage). The RSS valves are cycled during the pump test when the normally dry layup RSS line is filled and vented. The valves establish a boundary between the dry layup piping and filled ECCS lines. CR-01-11805 identified that it is not practical to stroke the valves with the RSS line dry because it could lead to air intrusion into both trains of ECCS if a LOCA occurred during the stroke. The only time the RSS lines are filled and vented is during refueling outages, therefore, it is concluded that the potential adverse impact on safety systems constitute a hardship allowing refueling frequency stroke time testing to assure operational readiness.

Alternative Frequency

These valves will be stroke time tested during refueling per ISTC-3521(d).

Alternate Test Justification ATJ-037

ASME Code Component(s) Affected

3CHS*MV8511A
3CHS*MV8511B

Category A

Class 2

Safety Function

These valves must open to provide a flow path for charging pump minimum flow during the injection phase of a LOCA. These valves must close during the cold leg recirculation phase of a LOCA to isolate charging pump recirculation flow to the RWST.

Justification

Valves 3CHS*MV8511A/B are normally closed during operation and are required to open on an SI signal to align the charging pump recirculation back to the RWST. These valves have an interlock with valve 3CHS*LCV112B/C. Each of the LCV112 valves has to be closed prior to opening the MV8511 valve. The LCV112 valves are on the Volume Control Tank (VCT) discharge to the suction of the charging pumps. Closure of these valves would isolate the normal suction flow path for the charging pumps.

The alternate suction flow path from the RWST to the charging pumps suction could be opened, however, the boron concentration of the RWST could be significantly different than the VCT, which would create a reactivity management concern.

A jumper in the control circuit of the MV8511 valves could be installed to bypass the interlock, however, the junction boxes (3JB*2641 and 3JB*2642) are physically located in the overhead of the C charging pump cubicle. Installation of a jumper on a quarterly frequency would require a ladder and would be difficult to perform due to the piping arrangement in the room. Installation of the jumper at the LCV112 valve actuators would require removal of the cover and subsequent cycling of the valve which also isolates the normal charging pump suction flow path.

Alternative Frequency

These valves will be stroke time open and closure tested during cold shutdown per ISTC-3521(c).

Alternate Test Justification ATJ-038

ASME Code Component(s) Affected

3FPW*CTV48
3FPW*CTV49

Category A

Class 2

Safety Function

These valves must close to isolate containment from the Fire Protection Water (FPW) system.

Justification

Valves 3FPW*CTV48 and 3FPW*CTV49 provide containment isolation for Penetration Z-56. These valves are normally open, air-operated valves that close on containment isolation. The penetration provides the only flow path for firewater into the containment header. This header is credited in the Fire Protection Program to provide a water curtain for separation of redundant fire safe shutdown cables inside containment, to meet NRC BTP 9.5-1. A failure of either valve during cycling would require the closure of the valve to meet the action requirements for containment isolation. This would cause the loss of credited fire separation for the redundant fire safe shutdown cables, due to the isolation of the firewater header inside containment.

Alternative Frequency

These valves will be stroke time closure and failure tested during cold shutdowns in accordance with ISTC 3521 (c).

Alternate Test Justification ATJ-039

ASME Code Component(s) Affected

3RSS*V907
3RSS*V908
3RSS*V909
3RSS*V910

Category C

Class 2

Safety Function

These valves must open to vent the RSS pump casing. These valves must close to prevent diversion of RSS pump flow.

Justification

The RSS pump casing check valve test frequency is being changed because of the RSS pump test frequency change. The frequency test requirements for the RSS pumps changed by applying ISTB-3420, "Pumps lacking required fluid inventory" (i.e. Dry Sump). The test frequency changed from quarterly to once every two years (i.e., performed each refueling outage). The RSS check valves can only be tested when the pump is tested.

Alternative Frequency

These valves will be stroke time closure and failure tested during refueling in accordance with ISTC 3522 (c).

ATTACHMENT 4.8

STATION TECHNICAL POSITION INDEX

Technical Position No.	Description
TP-01	Bi-directional Testing of Check Valves
TP-02	Check Valve Condition Monitoring
TP-03	Passive Valves Without Test Requirements
TP-04	Fail-Safe Testing of Valves
TP-05	Use of ASME Code Case OMN-8
TP-06	Classification of Skid-Mounted Components
TP-07	Manual Valve Exercise Frequency
TP-08	Categorization of IST Pumps (Group A or B)

ATTACHMENT 4.9

STATION TECHNICAL POSITIONS

Technical Position TP-01

Bi-directional Testing of Check Valves

Purpose

The purpose of this technical position is to establish the station position for the verification of the non-safety direction exercise testing of check valves by normal plant operations.

Applicability

This technical position is applicable to testing of the non-safety function (direction) of check valves that are included in the IST program. This position applies to those check valves required to be tested in accordance with Subsection ISTC and Appendix II - Condition Monitoring (ASME OM Code 2001 Edition through 2003 Addenda). This technical position does not apply to testing of the safety function (direction) of check valves included in the IST program.

Background

The ASME OM Code 2001 through 2003 Addenda section ISTC-3550, "Valves in Regular Use", states:

> "Valves that operate in the course of plant operation at a frequency that would satisfy the exercising requirements of this subsection need not be additionally exercised, provided that the observations otherwise required for testing are made and analyzed during such operation and recorded in the plant record at intervals no greater than specified in ISTC-3510."

Section ISTC-3510 requires that check valves shall be exercised nominally every three months with exceptions (for extended periods) referenced.

Section ISTC-5221(a)(2) states:

> "Check valves that have a safety function in only the open direction shall be exercised by initiating flow and observing that the obturator has traveled [to] either the full open position or to the position required to perform its intended function(s) (see ISTA-1100), and verify closure."

Section ISTC-5221(a)(3) states:

> "Check valves that have a safety function in only the close direction shall be exercised by initiating flow and observing that the obturator has traveled [to] at least the partially open position,[3] and verify that on cessation or reversal of flow, the obturator has traveled to the seat."
>
> "[3] The partially open position should correspond to the normal or expected system flow."

Technical Position TP-01

Normal or expected system flow may vary with plant configuration and alignment; however, the open "safety function" of a check valve typically requires a specified design accident flow rate. Since MPS3 Operations staff is trained in recognizing normal plant conditions, operator judgment is acceptable in determining the check valve non-safety direction by obtaining normal or expected flow rates for the plant operating condition.

In summary, check valve non-safety function direction is satisfactorily demonstrated by verifying closure or passing normal or expected flow, as applicable.

Position

MPS3 will verify the non-safety position of check valves included in the IST program. In lieu of a dedicated surveillance to perform the non-safety direction testing, the following alternate verifications may be performed as follows:

1. An appropriate means shall be determined, which establishes the method for determining the open/closed non-safety function of the check valve during normal operations. The position determination may be by direct indicator, or by other positive means such as changes in system pressure, flow rate, level, temperature, seat leakage, etc. This determination shall be documented in the respective Condition Monitoring (CM) plan for the specific check valve group. For check valves included in the IST program and not included in the CM plan, this determination shall be documented in the IST Bases Document for the specific check valve group.

2. Observation and analysis of plant processes that verify a check valve is satisfying its non-safety direction function may be used. As an example, a check valve that has a safety function only in the closed direction and normally provides a flow path to maintain plant operations. If the check valve is not open to pass flow, an alarm or indication would identify a problem to the operator. The operator would respond to take appropriate actions. A condition report would then be generated for the abnormal plant condition that would identify the check valve failure.

3. Observation and analysis of plant logs and other records satisfied by operator or engineering reviews may be an acceptable method for verifying a check valves non-safety direction during normal plant operations.

The open/closed non-safety function shall be recorded at a frequency required by ISTC-3510, nominally every three months, with exceptions as provided, in plant records such as MPS3 operating logs, electronic rounds, chart recorders, automated data loggers, etc. The safety function direction testing requires a quality record in the form of a surveillance test. Records as indicated above in 1 through 3 are satisfactory for the non-safety direction testing. A condition report shall be generated for any issues regarding check valve operability.

Technical Position TP-01

Justification

This technical position requires that the method of determining the non-safety position be established and documented in either the CM plan or the IST Bases Document. The plant systems and operator actions provide for the observations and analysis that the valve is satisfying its non-safety function. Additionally, the recording of parameters, which demonstrate valve position, is satisfied at a frequency in accordance with ISTC-3510. These actions collectively demonstrate the non-safety position of IST program check valves in regular use as required by ISTC-3550.

Technical Position TP-02

Check Valve Condition Monitoring

Purpose

The purpose of this technical position is to document MPS3's position on establishing and implementing a Check Valve CM Program in accordance with mandatory Appendix II of the ASME OM Code 2001 Edition through 2003 Addenda. The CM program specified in Appendix II provides certain flexibility in establishing test types, examinations, and preventive maintenance activities along with their associated intervals, when justified based on check valve performance and operating condition.

Applicability

This technical position is applicable to certain valves or groups of valves as permitted by ISTC-5222, Condition Monitoring Program. All valves tested as part of the CM program will be denoted by "CM-XX," where XX is the valve's CM group number, under 'Technical Position' in the IST Program plan.

Background

10CFR50.55a was revised 11/22/99 to endorse the ASME OMa-1995 Edition with 1996 Addenda with modifications. These modifications have been incorporated into the 2003 Addenda of the 2001 Edition of the ASME OM Code. This edition of the ASME OM Code provides provisions to implement a Check Valve CM Program for selected valves or groups of valves in accordance with mandatory Appendix II. MPS3's IST program for the third 10-year interval has been developed in accordance with the ASME OM Code 2001 Edition through 2003 Addenda. This edition of the code provides an alternative in Section ISTC-5222, Condition Monitoring Program, to the testing requirements of ISTC-3510, ISTC-3520, ISTC-3550 and ISTC-5221. This section specifies that the program shall be implemented in accordance with Appendix II, Check Valve Condition Monitoring Program.

Position

MPS3 will implement a Check Valve CM Program for selected valves or groups of valves in accordance with ISTC-5222 and Appendix II. The following guidelines will be adhered to for administering this program. Additionally, if the Appendix II program is discontinued for a valve or group of valves, then the requirements of ISTC-3510, ISTC-3520, ISTC-3550, and ISTC-3521 shall be implemented.

1. Purpose

   The purpose of the Check Valve CM Program is to improve check valve performance and to optimize testing, examination, and preventive maintenance activities in order to maintain the continued acceptable performance of a select valve or group of valves.

Technical Position TP-02

2. Scope

The MPS3 Check Valve CM Program will be applied to individual check valves or groups of check valves that are either candidates for improved performance or candidates whose performance can be optimized.

a. Candidates for improved valve performance are those check valves which may exhibit one or more of the following attributes:

   i. The valve(s) exhibits an unusually high failure rate during IST or operations;

   ii. The valve(s) cannot be exercised under normal operating conditions or during shutdown;

   iii. The valve(s) exhibits unusual, abnormal, or unexpected behavior during exercising or operations.

b. Candidates for optimization of testing, examination, and preventive maintenance activities are those check valves with documented acceptable performance that:

   i. Have had their performance improved under this program;

   ii. Cannot be exercised or are not readily exercised during normal operating condition or during shutdown;

   iii. Can only be disassembled and examined; or

   iv. It is decided that all of the associated activities of the valve or group will be optimized.

3. Groupings

For valves that are grouped together, the following valve attributes shall be considered:

a. Manufacturer, design, size, service media, materials of construction, and orientation.

b. Maintenance and modification history.

c. Test history and results.

d. System design shall be considered to determine potential flow instabilities, degree of disassembly, and the need for tolerance and dimensional measurements.

Technical Position TP-02

4. Analysis

An analysis of the test and maintenance history shall be performed to establish the basis for specifying IST, examination, and preventive maintenance activities. This analysis shall include the following:

a. Identify any common failure mode or corrective maintenance patterns.

b. Analyze these common patterns to determine their significance and to identify potential failure mechanisms:

   i. Determine if certain preventive maintenance activities would mitigate the failure or maintenance patterns;

   ii. Determine if certain CM activities are possible and effective in monitoring for these failure mechanisms;

   iii. Determine if periodic disassembly and examination would be an effective method in monitoring for these failure mechanisms.

   iv. Determine if the valve grouping is required to be changed.

5. Condition Monitoring Activities

a. Performance Improvement Activities

   i. If sufficient information is not available or the results of the analysis performed in 4 above are not conclusive, an interim period not to exceed 2 refueling outages shall be established to determine the cause of the failure or maintenance patterns. The following activities shall be performed at sufficient intervals over the interim period.

      1. Identify interim tests (e.g. non-intrusive) to assess the performance of the valve or group of valves.

      2. Identify interim examinations to evaluate potential degradation mechanisms.

      3. Identify other types of analysis to be performed that will assess check valve condition.

      4. Identify which of these activities will be performed on each valve.

      5. Identify the interval of each activity.

   ii. Complete or revise the CM test plans to document the check valve program performance improvement activities and their associated frequencies.

Technical Position TP-02

iii. Perform these activities at their assigned intervals unit:

1. Sufficient information is obtained to permit an adequate analysis.
2. Until the end of the interim period (two refueling outages or three years, whichever is longer).

iv. After performance, a review shall be performed for each activity to determine if changes to the program are required. If changes are required, the program shall be revised before the next performance of the activity.

b. Optimization of Condition Monitoring Activities

i. If sufficient information is available to assess the performance adequacy of the check valve or group, then the following activities shall be performed:

1. Identify applicable preventive maintenance activities including the intervals that are required to maintain the continued acceptable performance of the check valve or group of check valves.
2. Identify the applicable examination activities including the interval that will be used to periodically assess the condition of each check valve or group of check valves.
3. Identify the applicable test activities including intervals that will be used to periodically verify the acceptable performance of each check valve or group of check valves.
4. Identify which of these activities, including the interval, will be performed on each valve in the group.

ii. Revise the CM plans to document the optimized condition monitoring program activities and associated intervals for each activity.

iii. Continue performance of these activities at their associated intervals.

iv. Review the results of the performance of each activity to determine if changes to the optimized CM program are required.

Technical Position TP-02

6. Test Requirements and Frequency

The following requirements apply when implementing the above plans for a single valve or group of valves

a. Valve opening and closing functions must be demonstrated when flow testing or examination methods (non-intrusive, or disassembly and inspection) are used.

b. The initial interval for new tests and associated examinations may not exceed two fuel cycles or three years, whichever is longer.

c. Extension of the initial interval may not exceed one fuel cycle per extension with the maximum interval not to exceed 10 years.

d. Trending and evaluation of existing data must be used to reduce or extend the time interval between tests.

7. Documentation

The CM program shall be documented per the Check Valve Condition Monitoring Administrative Procedure. The plan for each check valve or group of check valves shall be documented in the CM plan and shall contain as a minimum the following information:

a. The list of valves in each group including the group basis.

b. Date the valve or group of valves was evaluated for inclusion or exclusion from the CM program.

c. Safety function of valve or valve group.

d. Analysis/justification that forms the basis for the program.

e. Identification of the failure or maintenance patterns for each valve

f. CM activities including intervals for each valve or valve group.

g. Trending attributes and bases for the associated valve or valve group.

Technical Position TP-03

Passive Valves Without Test Requirements

Purpose

The purpose of this technical position is to establish the station position for valves which perform a passive safety function; however, no testing in accordance with ISTC is required.

Applicability

This technical position is applicable to valves which perform a passive function in accordance with ISTA-2000 and do not have IST requirements per Table ISTC-3500-1. This position is typical of Category B, passive valves that do not have position indication. An example is a manual valve that must remain in its normal position during an accident, to perform its intended function. Typically, manual valves that perform a safety function are locked in their safety position and administratively controlled by procedures. These valves would be considered passive. If they do not have remote position indicating systems and are categorized as B, they would not be subjected to any test requirements in accordance with Table ISTC-3500-1.

Position

The MPS3 IST Program, Valve Tables - Attachment 4.11, will not list valves that meet the following criteria.

- The valve is Category B (seat leakage in the closed position is inconsequential for fulfillment of the valves' required function(s)) in accordance with ISTC-1300.
- The valve is considered passive (valve maintains obturator position and is not required to change obturator position to accomplish the required function(s)) in accordance with ISTA-2000.
- The valve does not have a remote position indicating system that detects and indicates valve position.

Justification

Valves that meet this position will not be listed in the MPS3 IST Program, Valve Tables - Attachment 4.11. However, the basis for categorization and consideration of active/passive functions shall be documented in the IST Program Basis Document.

Technical Position TP-04

Fail-Safe Testing of Valves

Purpose

The purpose of this technical position is to establish the station position for fail-safe testing of valves in conjunction with stroke time exercising or position indication testing.

Applicability

This technical position is applicable to valves with fail-safe actuators required to be tested in accordance with ISTC-3560.

Background

The ASME OM Code 2001 through 2003 Addenda section ISTC-3560 requires;

> "Valves with fail-safe actuators shall be tested by observing the operation of the actuator upon loss of valve actuating power in accordance with the exercising frequency of ISTC-3510."

Section ISTC-3510 states;

> "Active Category, Category B, and Category C check valves shall be exercised nominally every three months..."

Position

In cases where normal valve operator action moves the valve to the open or closed position by de-energizing the operator electrically, by venting air, or both, the exercise test will satisfy the fail-safe test requirements and an additional test specific for fail-safe testing will not be performed.

MPS3 will also use remote position indication as applicable to verify proper fail-safe operation, provided that the indication system for the valve is periodically verified in accordance with ISTC-3700.

Justification

MPS3 IST program valves that fail open or closed upon loss of actuator power use the fail-safe mechanism to stroke the valve to its safety position. For example, an air-operated valve that fails closed may use air to open the valve against spring force. When the actuator control switch is placed in the closed position, air is vented from the diaphragm and the spring moves the obturator to the closed position.

Technical Position TP-05

Use of ASME Code Case OMN-8

Purpose

The purpose of this technical position is to establish the station position for testing of power-operated control valves that have only a fail-safe safety function.

Applicability

This technical position is applicable to power-operated control valves that have only a fail-safe safety function and are required to be tested in accordance with ISTC-3560.

Background

Code Case OMN-8 is based on the following code inquiry and response:

> *Inquiry:* What alternative requirements to those of ASME/ANSI OMa-1998, Part 10, para. 4.2 through OM Code-1995, ISTC 4.2 may be used for power-operated control valves that have only a fail-safe function?
>
> *Reply:* It is the opinion of the Committee that the requirements of ASME/ANSI OMa-1998, Part 10, para. 4.2.1.4, Power-Operated Valve Stroke Testing; para. 4.2.1.8, Stroke Time Acceptance Criteria; and para. 4.2.1.9(b) need not be met. All other requirements of para. 4.2 shall be met for ASME/ANSI OMa-1988, Part 10.
>
> Further, the requirements of OM Code-1995, ISTC 4.2.4, Power-Operated Valve Stroke Testing; ISTC 4.2.8, Stroke Time Acceptance Criteria; and ISTC 4.2.9(b) need not be met. All other applicable requirements of the paragraph shall be met.
>
> Any abnormality or erratic action experienced during valve exercising shall be recorded in the record of tests, and an evaluation shall be made regarding need for corrective action.

Position

No stroke time testing is required for these valves since this function is excluded from testing based on ASME Code Case OMN-8. The fail-safe function of these valves will be tested in accordance with the ASME OM Code requirements of ISTC-3560.

Justification

ASME OM Code 2001 Edition through 2003 Addenda, Code Case OMN-8, "Alternative Rules for Preservice and Inservice Testing of Power-Operated Valves That Are Used for System Control and Have a Safety Function per OM-10" was approved for use per Regulatory Guide 1.192, OPERATION AND MAINTENANCE CODE CASE ACCEPTABILITY - ASME OM CODE.

Technical Position TP-06

Classification of Skid-Mounted Components

Purpose

The purpose of this technical position is to clarify requirements for classification of various skid-mounted components, and to clarify the testing requirements of these components.

Background

The ASME Code allows classification of some components as skid-mounted when their satisfactory operation is demonstrated by the satisfactory performance of the associated major components. Testing of the major component is sufficient to satisfy IST requirements for skid-mounted components. In section 3.4 of NUREG 1482, the NRC supports the designation of components as skid-mounted:

> "The staff has determined that the testing of the major component is an acceptable means for verifying the operational readiness of the skid-mounted and component subassemblies if the licensee documents this approach in the IST program. This is acceptable for both code class components and non-code class components tested and tracked by the IST program."

In the 1996a addenda to the ASME OM Code (endorsed by 10CFR50.55(a) in October 2000), the term skid-mounted was clarified by the addition of ISTA paragraph 1.7:

> ISTA 1.7 Definitions
>
> *Skid-mounted components and component sub assemblies* – components integral to or that support operation of major components, even though these components may not be located directly on the skid. In general, these components are supplied by the manufacturer of the major component. Examples include: diesel skid-mounted fuel oil pumps and valves, steam admission and trip throttle valves for high-pressure coolant injection or auxiliary feedwater turbine-driven pumps, and solenoid-operated valves provided to control the air-operated valve.

Technical Position TP-06

This definition was further clarified in the 2001 Edition of the ASME Code:

ISTA-2000 DEFINITIONS

Skid-mounted pumps and valves: pumps and valves integral to or that support operation of major components, even though these components may not be located directly on the skid. In general, these pumps and valves are supplied by the manufacturer of the major component. Examples include:

(a) diesel fuel oil pumps and valves

(b) steam admission and trip throttle valves for high-pressure coolant injection turbine-driven pumps

(c) steam admission and trip throttle valves for auxiliary feedwater turbine-driven pumps

(d) solenoid-operated valves provided to control an air-operated valve

Additionally the subsections pertaining to pumps (ISTB) and valves (ISTC) include exclusions/exemptions for skid-mounted components;

ISTB-1200(c) Exclusions

Skid-mounted pumps that are tested as part of the major component and are justified by the owner to be adequately tested.

ISTC-1200 Exemptions

Skid-mounted valves are excluded from this subsection provided they are tested as part of the major component and are justified by the owner to be adequately tested.

Position

The 2001 ASME OM Code definition of skid-mounted should be used for classification of components in the MPS3 IST program. In addition, for a component to be considered skid-mounted:

- The major component associated with the skid-mounted component must be surveillance tested at a frequency sufficient to meet ASME Code test frequency for the skid-mounted component.

- Satisfactory operation of the skid-mounted component must be demonstrated by satisfactory operation of the major component.

- The IST Bases Document should describe the bases for classifying a component as skid-mounted, and the IST program plan should reference this technical position for the component.

Technical Position TP-06

Justification

Classification of components as skid-mounted eliminates the need for testing of sub components that are redundant with testing of major components provided testing of the major components demonstrates satisfactory operation of the "skid-mounted" components.

Technical Position TP-07

Manual Valve Exercise Frequency

Purpose

The purpose of this technical position is to establish the station position for the frequency of exercising those manual valves which are required to be exercised.

Applicability

This technical position is applicable to the manual valves included in the IST program.

Background

The ASME OM Code 2001 through 2003 Addenda section ISTC-3540 states;

> "Manual valves shall be full-stroke exercised at least once every five years, except where adverse conditions[2] may require the valve to be tested more frequently to ensure operational readiness."
>
> [2] Harsh service environment, lubricant hardening, corrosive or sediment-laden process fluid, or degraded valve components are some examples of adverse conditions.

In 10CFR 50.55a(b)(3)(vi), the NRC stated the following with regards to manual valve exercise frequency;

> "Manual valves must be exercised on a 2-year interval rather that the 5-year interval specified in paragraph ISTC-3540 of the 1999 Addenda through the latest edition and addenda incorporated by reference in paragraph (b)(3) of this section, provided that adverse conditions do not require more frequent testing."

Which, as written includes the 2001/2003a of the ASME Code.

Position

MPS3 will perform exercising of manual valves within the scope of the IST program at a frequency not to exceed two years.

Justification

The NRC Rule Change will be adopted for the frequency of exercising manual valves at least once every two years. This interval is more frequent than required by the edition of the code used by MPS3, therefore no other justification is required.

Technical Position TP-08

Categorization of IST Pumps (Group A or B)

Position

MPS3 has categorized the pumps required to be included in the IST program as either Group A or B in accordance with the requirements of ISTB-1300/2000.

Group A pumps are pumps that are operated continuously or routinely during normal operation, cold shutdown, or refueling operations. The following pumps are categorized as Group A at MPS3:

Pump Number	Class	Group	Function
3CCE*P1A	3	A	Charging Pump Cooling Pump
3CCE*P1B	3	A	Charging Pump Cooling Pump
3CCP*P1A	3	A	Reactor Plant Component Cooling Pump
3CCP*P1B	3	A	Reactor Plant Component Cooling Pump
3CCP*P1C	3	A	Reactor Plant Component Cooling Pump
3CHS*P2A	3	A	Boric Acid Transfer Pump
3CHS*P2B	3	A	Boric Acid Transfer Pump
3CHS*P3A	2	A	Chemical Volume Control Charging Pump
3CHS*P3B	2	A	Chemical Volume Control Charging Pump
3CHS*P3C	2	A	Chemical Volume Control Charging Pump
3HVK*P1A	3	A	HVAC Pump
3HVK*P1B	3	A	HVAC Pump
3RHS*P1A	2	A	Residual Heat Removal (During Refueling Operations)
3RHS*P1B	2	A	Residual Heat Removal (During Refueling Operations)
3SFC*P1A	3	A	Spent Fuel Pool Cooling & Purification Pump
3SFC*P1B	3	A	Spent Fuel Pool Cooling & Purification Pump
3SWP*P1A	3	A	Service Water Pump
3SWP*P1B	3	A	Service Water Pump
3SWP*P1C	3	A	Service Water Pump
3SWP*P1D	3	A	Service Water Pump
3SWP*P2A	3	A	Control Building Air Conditioning Booster Pump
3SWP*P2B	3	A	Control Building Air Conditioning Booster Pump

Technical Position TP-08

Group B pumps are those pumps in standby systems that are not operated routinely except for testing. The following pumps are categorized as Group B at MPS3:

Pump Number	Class	Group	Function
3CCI*P1A	3	B	Safety Injection Pump Cooling Pump
3CCI*P1B	3	B	Safety Injection Pump Cooling Pump
3EGF*P1A	3	B	Diesel Fuel Oil Pump
3EGF*P1B	3	B	Diesel Fuel Oil Pump
3EGF*P1C	3	B	Diesel Fuel Oil Pump
3EGF*P1D	3	B	Diesel Fuel Oil Pump
3FWA*P1A	3	B	Auxiliary Feedwater Pump
3FWA*P1B	3	B	Auxiliary Feedwater Pump
3FWA*P2	3	B	Auxiliary Feedwater Pump
3QSS*P3A	2	B	Quench Spray
3QSS*P3B	2	B	Quench Spray
3RHS*P1A	2	B	Residual Heat Removal (During Power Operations)
3RHS*P1B	2	B	Residual Heat Removal (During Power Operations)
3RSS*P1A	2	B	Containment Recirculation Spray Pump
3RSS*P1B	2	B	Containment Recirculation Spray Pump
3RSS*P1C	2	B	Containment Recirculation Spray Pump
3RSS*P1D	2	B	Containment Recirculation Spray Pump
3SIH*P1A	2	B	High Pressure Safety Injection Pump
3SIH*P1B	2	B	High Pressure Safety Injection Pump
3SWP*P3A	3	B	MCC and Rod Control Area Air Conditioning Booster Pump
3SWP*P3B	3	B	MCC and Rod Control Area Air Conditioning Booster Pump

Group A Pump Tests – Group A tests are performed quarterly for each pump categorized as A. The following IST parameters are measured for each Group A pump test:

- Speed (if pump is variable speed)
- Differential Pressure
- Discharge Pressure, (for positive displacement pumps)
- Flow Rate
- Vibration

Group B Pump Tests - Group B tests are performed quarterly for each pump categorized as B. The following IST parameters are measured for each Group B pump test.

- Speed (if pump is variable speed)
- Differential Pressure[1]
- Flow Rate[1]

[1] For positive displacement pumps, flow rate shall be measured or determined, for all other pumps, differential pressure or flow rate shall be measured or determined.

Technical Position TP-08

Comprehensive Pump Tests – Comprehensive pump tests are performed biennially for all pumps in the IST program. The following IST parameters are measured for each Comprehensive pump test:

- Speed (if pump is variable speed)
- Differential Pressure
- Discharge Pressure, (for positive displacement pumps)
- Flow Rate
- Vibration

The following instrument accuracy requirements apply to each test type:

Parameter	Group A	Group B	Comprehensive
Pressure	+/- 2.0%	+/- 2.0%	+/- 0.5%
Flow Rate	+/- 2.0%	+/- 2.0%	+/- 2.0%
Speed	+/- 2.0%	+/- 2.0%	+/- 2.0%
Vibration	+/- 5.0%	+/- 5.0%	+/- 5.0%
Differential Pressure	+/- 2.0%	+/- 2.0%	+/- 0.5%

ATTACHMENT 4.10

INSERVICE TESTING PUMP TABLE

Pump Tag	P&ID	P&ID Coor.	Safety Class	Pump Type	Pump Driver	Category	Test Type	Test Freq.	Relief Request	Tech. Pos.	Notes
Pump Name	CHARGING PUMP COOLING										
3CCE*P1A	26905-1	E-8	3	C	Motor	A	DPa	Q			
							DPc	2A			
							Qa	Q			
							Qc	2A			
							Va	Q			
							Vc	2A			
Pump Name	CHARGING PUMP COOLING										
3CCE*P1B	26905-1	C-10	3	C	Motor	A	DPa	Q			
							DPc	2A			
							Qa	Q			
							Qc	2A			
							Va	Q			
							Vc	2A			
Pump Name	SAFETY INJECTION PUMP COOLING										
3CCI*P1A	26914-1	I-5	3	C	Motor	B	DPb	Q	P-001		
							DPc	2A	P-001		
							Qb	Q	P-001		
							Qc	2A	P-001		
							Vc	2A	P-001		

Pump Tag	P&ID	P&ID Coor.	Safety Class	Pump Type	Pump Driver	Category	Test Type	Test Freq.	Relief Request	Tech. Pos.	Notes
Pump Name	SAFETY INJECTION PUMP COOLING										
3CCI*P1B	26914-1	I-9	3	C	Motor	B	DPb	Q	P-001		
							DPc	2A	P-001		
							Qb	Q	P-001		
							Qc	2A	P-001		
							Vc	2A	P-001		
Pump Name	REACTOR PLANT COMPONENT COOLING										
3CCP*P1A	26921-1	E-5	3	C	Motor	A	DPa	Q	P-004		
							DPc	2A			
							Qa	Q	P-004		
							Qc	2A			
							Va	Q	P-004		
							Vc	2A			
Pump Name	REACTOR PLANT COMPONENT COOLING										
3CCP*P1B	26921-1	E-8	3	C	Motor	A	DPa	Q	P-004		
							DPc	2A			
							Qa	Q	P-004		
							Qc	2A			
							Va	Q	P-004		
							Vc	2A			

Pump Tag	P&ID	P&ID Coor.	Safety Class	Pump Type	Pump Driver	Category	Test Type	Test Freq.	Relief Request	Tech. Pos.	Notes
Pump Name	REACTOR PLANT COMPONENT COOLING										
3CCP*P1C	26921-1	E-6	3	C	Motor	A	DPa	Q	P-004		
							DPc	2A			
							Qa	Q	P-004		
							Qc	2A			
							Va	Q	P-004		
							Vc	2A			
Pump Name	Boric Acid Transfer Pump										
3CHS*P2A	26904-3	K-5	3	C	Motor	A	DPa	Q			
							DPc	2A			
							Qa	Q			
							Qc	2A			
							Va	Q			
							Vc	2A			
Pump Name	Boric Acid Transfer Pump										
3CHS*P2B	26904-3	K-7	3	C	Motor	A	DPa	Q			
							DPc	2A			
							Qa	Q			
							Qc	2A			
							Va	Q			
							Vc	2A			

Pump Tag	P&ID	P&ID Coor.	Safety Class	Pump Type	Pump Driver	Category	Test Type	Test Freq.	Relief Request	Tech. Pos.	Notes
Pump Name	CHEMICAL VOLUME CONTROL CHARGING PUMP										
3CHS*P3A	26904-1	H-8	2	C	Motor	A	DPa	Q			
							DPc	2A			
							Qa	Q			
							Qc	2A			
							Va	Q			
							Vc	2A			
Pump Name	CHEMICAL VOLUME CONTROL CHARGING PUMP										
3CHS*P3B	26904-1	H-11	2	C	Motor	A	DPa	Q			
							DPc	2A			
							Qa	Q			
							Qc	2A			
							Va	Q			
							Vc	2A			
Pump Name	CHEMICAL VOLUME CONTROL CHARGING PUMP										
3CHS*P3C	26904-1	H-10	2	C	Motor	A	DPa	Q			
							DPc	2A			
							Qa	Q			
							Qc	2A			
							Va	Q			
							Vc	2A			

Pump Tag	P&ID	P&ID Coor.	Safety Class	Pump Type	Pump Driver	Category	Test Type	Test Freq.	Relief Request	Tech. Pos.	Notes
Pump Name	DIESEL FUEL OIL										
3EGF*P1A	26921-1	B-3	3	V	Motor	B	DPb	Q			
							DPc	2A			
							Qc	2A			
							Vc	2A			
Pump Name	DIESEL FUEL OIL										
3EGF*P1B	26921-1	B-7	3	V	Motor	B	DPb	Q			
							DPc	2A			
							Qc	2A			
							Vc	2A			
Pump Name	DIESEL FUEL OIL										
3EGF*P1C	26921-1	C-3	3	V	Motor	B	DPb	Q			
							DPc	2A			
							Qc	2A			
							Vc	2A			
Pump Name	DIESEL FUEL OIL										
3EGF*P1D	26921-1	C-7	3	V	Motor	B	DPb	Q			
							DPc	2A			
							Qc	2A			
							Vc	2A			

Pump Tag	P&ID	P&ID Coor.	Safety Class	Pump Type	Pump Driver	Category	Test Type	Test Freq.	Relief Request	Tech. Pos.	Notes
Pump Name	AUXILIARY FEEDWATER										
3FWA*P1A	26930-2	G-5	3	C	Motor	B	DPb	Q			
							DPc	2A			
							Qc	2A			
							Vc	2A			
Pump Name	AUXILIARY FEEDWATER										
3FWA*P1B	26930-2	E-8	3	C	Motor	B	DPb	Q			
							DPc	2A			
							Qc	2A			
							Vc	2A			
Pump Name	AUXILIARY FEEDWATER										
3FWA*P2	26930-2	D-10	3	C	Turbine	B	DPb	Q			
							DPc	2A			
							Nb	Q			
							Nc	2A			
							Qc	2A			
							Vc	2A			

Pump Tag	P&ID	P&ID Coor.	Safety Class	Pump Type	Pump Driver	Category	Test Type	Test Freq.	Relief Request	Tech. Pos.	Notes
Pump Name	CONTROL BLDG.HVAC;BLDG PURGE,BTY ROOM HVAC,COM & INST RACK A/C										
3HVK*P1A	26951-4	F-4	3	C	Motor	A	DPa	Q			
							DPc	2A			
							Qa	Q			
							Qc	2A			
							Va	Q			
							Vc	2A			
Pump Name	CONTROL BLDG.HVAC;BLDG PURGE,BTY ROOM HVAC,COM & INST RACK A/C										
3HVK*P1B	26951-4	F-9	3	C	Motor	A	DPa	Q			
							DPc	2A			
							Qa	Q			
							Qc	2A			
							Va	Q			
							Vc	2A			
Pump Name	QUENCH SPRAY										
3QSS*P3A	26915-1	I6	2	C	Motor	B	DPb	Q			
							DPc	2A			
							Qc	2A			
							Vc	2A			

Pump Tag	P&ID	P&ID Coor.	Safety Class	Pump Type	Pump Driver	Category	Test Type	Test Freq.	Relief Request	Tech. Pos.	Notes
Pump Name	QUENCH SPRAY										
3QSS*P3B	26915-1	I-8	2	C	Motor	B	DPb	Q			
							DPc	2A			
							Qc	2A			
							Vc	2A			
Pump Name	RESIDUAL HEAT REMOVAL PUMP										
3RHS*P1A	26912-1	C-6	2	C	Motor	A/B	DPa	Q	P-002		
							DPb	Q	P-002		
							DPc	2A			
							Qa	Q	P-002		
							Qc	2A			
							Va	Q	P-002		
							Vc	2A			
Pump Name	RESIDUAL HEAT REMOVAL PUMP										
3RHS*P1B	26912-1	C-10	2	C	Motor	A/B	DPa	Q	P-002		
							DPb	Q	P-002		
							DPc	2A			
							Qa	Q	P-002		
							Qc	2A			
							Va	Q	P-002		
							Vc	2A			

Pump Tag	P&ID	P&ID Coor.	Safety Class	Pump Type	Pump Driver	Category	Test Type	Test Freq.	Relief Request	Tech. Pos.	Notes
Pump Name	CONTAINMENT RECIRCULATION SPRAY										
3RSS*P1A	26912-3	E-10	2	V	Motor	B	DPc	2A			A group B test is not required due to lack of inventory in the containment sump [ISTB-3430].
							Qc	2A			
							Vc	2A			
Pump Name	CONTAINMENT RECIRCULATION SPRAY										
3RSS*P1B	26912-3	E-4	2	V	Motor	B	DPc	2A			A group B test is not required due to lack of inventory in the containment sump [ISTB-3430].
							Qc	2A			
							Vc	2A			
Pump Name	CONTAINMENT RECIRCULATION SPRAY										
3RSS*P1C	26912-3	E-8	2	V	Motor	B	DPc	2A			
							Qc	2A			
							Vc	2A			
Pump Name	CONTAINMENT RECIRCULATION SPRAY										
3RSS*P1D	26912-3	E-2	2	V	Motor	B	DPc	2A			
							Qc	2A			
							Vc	2A			

Pump Tag	P&ID	P&ID Coor.	Safety Class	Pump Type	Pump Driver	Category	Test Type	Test Freq.	Relief Request	Tech. Pos.	Notes
Pump Name	SPENT FUEL POOL COOLING & PURIFICATION										
3SFC*P1A	26911-1	F-9	3	C	Motor	A	DPa	Q			
							DPc	2A			
							Qa	Q			
							Qc	2A			
							Va	Q			
							Vc	2A			
Pump Name	SPENT FUEL POOL COOLING & PURIFICATION										
3SFC*P1B	26911-1	F-11	3	C	Motor	A	DPa	Q			
							DPc	2A			
							Qa	Q			
							Qc	2A			
							Va	Q			
							Vc	2A			
Pump Name	HIGH PRESSURE SAFETY INJECTION										
3SIH*P1A	26913-2	C-2	2	C	Motor	B	DPb	Q			
							DPc	2A			
							Qb	Q			
							Qc	2A			
							Vc	2A			

Pump Tag	P&ID	P&ID Coor.	Safety Class	Pump Type	Pump Driver	Category	Test Type	Test Freq.	Relief Request	Tech. Pos.	Notes
Pump Name	HIGH PRESSURE SAFETY INJECTION										
3SIH*P1B	26913-2	C-10	2	C	Motor	B	DPb	Q			
							DPc	2A			
							Qb	Q			
							Qc	2A			
							Vc	2A			
Pump Name	SERVICE WATER										
3SWP*P1A	26933-1	B-9	3	V	Motor	A	DPa	Q			
							DPc	2A			
							Qa	Q			
							Qc	2A			
							Va	Q			
							Vc	2A			
Pump Name	SERVICE WATER										
3SWP*P1B	26933-1	F-4	3	V	Motor	A	DPa	Q			
							DPc	2A			
							Qa	Q			
							Qc	2A			
							Va	Q			
							Vc	2A			

Pump Tag	P&ID	P&ID Coor.	Safety Class	Pump Type	Pump Driver	Category	Test Type	Test Freq.	Relief Request	Tech. Pos.	Notes
Pump Name	SERVICE WATER										
3SWP*P1C	26933-1	B-7	3	V	Motor	A	DPa	Q			
							DPc	2A			
							Qa	Q			
							Qc	2A			
							Va	Q			
							Vc	2A			
Pump Name	SERVICE WATER										
3SWP*P1D	26933-1	F-2	3	V	Motor	A	DPa	Q			
							DPc	2A			
							Qa	Q			
							Qc	2A			
							Va	Q			
							Vc	2A			
Pump Name	control building air conditioning booster										
3SWP*P2A	26933-4	L-7	3	C	Motor	A	DPa	Q			
							DPc	2A			
							Qa	Q			
							Qc	2A			
							Va	Q			
							Vc	2A			

Pump Tag	P&ID	P&ID Coor.	Safety Class	Pump Type	Pump Driver	Category	Test Type	Test Freq.	Relief Request	Tech. Pos.	Notes
Pump Name	control building air conditioning booster										
3SWP*P2B	26933-4	L-3	3	C	Motor	A	DPa	Q			
							DPc	2A			
							Qa	Q			
							Qc	2A			
							Va	Q			
							Vc	2A			
Pump Name	MCC and Rod Control Area Air Conditioning Booster pump										
3SWP*P3A	26933-4	H-11	3	C	Motor	B	DPb	Q			
							DPc	2A			
							Qc	2A			
							Vc	2A			
Pump Name	MCC and Rod Control Area Air Conditioning Booster										
3SWP*P3B	26933-4	M-1	3	C	Motor	B	DPb	Q			
							DPc	2A			
							Qc	2A			
							Vc	2A			

ATTACHMENT 4.11

INSERVICE TESTING VALVE TABLE

Valve Tag	P&ID	P&ID Coor.	Safety Class	Cat.	Size	Valve Type	Act. Type	Active / Passive	Normal Position	Safety Position	Test Type	Test Freq.	Alt. Freq.	Relief Request	Deferred Just.	Tech. Pos.	Notes
Valve Name	STEAM GENERATOR OUT TO BLOWDOWN TANK																
3BDG*CTV22A	26923-1	E-4	2	B	4.0	GL	AO	A	O	C	FT	Q				TP-04	
											PI	2A					
											STC	Q					
Valve Name	STEAM GENERATOR TO BLOWDOWN TANK																
3BDG*CTV22B	26923-1	E-6	2	B	4.0	GL	AO	A	O	C	FT	Q				TP-04	
											PI	2A					
											STC	Q					
Valve Name	STEAM GENERATOR TO BLOWDOWN TANK																
3BDG*CTV22C	26923-1	E-8	2	B	4.0	GL	AO	A	O	C	FT	Q				TP-04	
											PI	2A					
											STC	Q					
Valve Name	STEAM GENERATOR OUT TO BLOWDOWN TANK																
3BDG*CTV22D	26923-1	E-11	2	B	4.0	GL	AO	A	O	C	FT	Q				TP-04	
											PI	2A					
											STC	Q					

Valve Tag	P&ID	P&ID Coor.	Safety Class	Cat.	Size	Valve Type	Act. Type	Active / Passive	Normal Position	Safety Position	Test Type	Test Freq.	Alt. Freq.	Relief Request	Deferred Just.	Tech. Pos.	Notes
Valve Name	**A' CHARGING PUMP COOLING PUMP SUCTION XCONN**																
3CCE*AOV26A	26905	E-5	3	B	2.0	GL	AO	A	O	C	FT	Q				TP-04	
											PI	2A					
											STC	Q					
Valve Name	**'B' CHARGING PUMP COOLING PUMP SUCTION XCONN**																
3CCE*AOV26B	26905	D-5	3	B	2.0	GL	AO	A	O	C	FT	Q				TP-04	
											PI	2A					
											STC	Q					
Valve Name	**'A' CHARGING PUMP COOLING PUMP DISCHARGE TRANSFER CONNECTION**																
3CCE*AOV30A	26905	G-8	3	B	2.0	GL	AO	A	O	C	FT	Q				TP-04	
											PI	2A					
											STC	Q					
Valve Name	**'B' CHARGING PUMP COOLING PUMP DISCHARGE TRANSFER CONNECTION**																
3CCE*AOV30B	26905	G-9	3	B	2.0	GL	AO	A	O	C	FT	Q				TP-04	
											PI	2A					
											STC	Q					
Valve Name	**3CCE-E1 Discharge**																
3CCE*RV40A	26905	E-4	3	C	0.75	RV	SA	A	C	O/C	SRV	10A					

Valve Tag	P&ID	P&ID Coor.	Safety Class	Cat.	Size	Valve Type	Act. Type	Active / Passive	Normal Position	Safety Position	Test Type	Test Freq.	Alt. Freq.	Relief Request	Deferred Just.	Tech. Pos.	Notes
Valve Name	**3CCE-E1 Discharge**																
3CCE*RV40B	26905	C-4	3	C	0.75	RV	SA	A	C	O/C	SRV	10A					
Valve Name	**Charging Pump A Oil Cooler Relief**																
3CCE*RV43A	26905	H-3	3	C	0.75	RV	SA	A	C	O/C	SRV	10A					
Valve Name	**Charging Pump B Oil Cooler Relief**																
3CCE*RV43B	26905	N-4	3	C	0.75	RV	SA	A	C	O/C	SRV	10A					
Valve Name	**Charging Pump C Oil Cooler Relief**																
3CCE*RV43C	26905	K-3	3	C	0.75	RV	SA	A	C	O/C	SRV	10A					
Valve Name	**A CHARGE PUMP COOLER TEMPERATURE CONTROL**																
3CCE*TV37A	26905	E-2	3	B	2.0	GL-3W	AO	A	O	O	FT	Q				TP-05	
Valve Name	**CHARGING PUMP (B) COOLER TEMPERATURE CONTROL**																
3CCE*TV37B	26905	C-2	3	B	2.0	GL-3W	AO	A	O	O	FT	Q				TP-05	
Valve Name	**CHECK VALVE CHG. PP. COOLING PP "A"**																
3CCE*V001	26905	F-8	3	C	2.0	CL	SA	A	SYS	O/C	FSC	Q	CM			CM-27	
											FSO	Q	CM			CM-27	
Valve Name	**CHECK VALVE CHG PP COOLING PP "B"**																
3CCE*V013	26905	D-10	3	C	2.0	CL	SA	A	SYS	O/C	FSC	Q	CM			CM-27	
											FSO	Q	CM			CM-27	

Valve Tag	P&ID	P&ID Coor.	Safety Class	Cat.	Size	Valve Type	Act. Type	Active / Passive	Normal Position	Safety Position	Test Type	Test Freq.	Alt. Freq.	Relief Request	Deferred Just.	Tech. Pos.	Notes
Valve Name	**Safety Injection Pump Cooler Relief**																
3CCI*RV31A	26914-1	G-3	3	C	0.75	RV	SA	A	C	O/C	SRV	10A					
Valve Name	**Safety Injection Cooling Pump B Cooler Relief**																
3CCI*RV31B	26914-1	G-7	3	C	0.75	RV	SA	A	C	O/C	SRV	10A					
Valve Name	**Safety Injection Pump Bearing Oil Cooler Relief**																
3CCI*RV36A	26914-1	L-3	3	C	0.75	RV	SA	A	C	O/C	SRV	10A					
Valve Name	**Safety Injection Pump Bearing Oil Cooler Relief**																
3CCI*RV36B	26914-1	L-7	3	C	0.75	RV	SA	A	C	O/C	SRV	10A					
Valve Name	**CHECK VALVE HPSI COOLING PP A DIS. CHK.**																
3CCI*V001	26914-1	J-5	3	C	1.0	CL	SA	A	SYS	O	FSC	Q	CM			CM-28	
											FSO	Q	CM			CM-28	
Valve Name	**CHECK VALVE HPSI PP COOLING PP B DIS. CHK.**																
3CCI*V008	26914-1	J-9	3	C	1.0	CL	SA	A	SYS	O	FSC	Q	CM			CM-28	
											FSO	Q	CM			CM-28	
Valve Name	**TRAIN 'A' NON-SAFETY HEADER SUPPLY ISOLATION**																
3CCP*AOV10A	26921-1	M-5	3	B	16.0	BF	AO	A	O	C	FT	Q				TP-04	
											PI	2A					
											STC	Q					

Valve Tag	P&ID	P&ID Coor.	Safety Class	Cat.	Size	Valve Type	Act. Type	Active / Passive	Normal Position	Safety Position	Test Type	Test Freq.	Alt. Freq.	Relief Request	Deferred Just.	Tech. Pos.	Notes
Valve Name	**TRAIN B REACTOR PLANT CLOSED COOLING WATER NON-SAFETY HEADER**																
3CCP*AOV10B	26921-1	M-6	3	B	12.0	BF	AO	A	O	C	FT	Q				TP-04	
											PI	2A					
											STC	Q					
Valve Name	**RPCCW RETURN 1 RCP THERMAL BARRIER**																
3CCP*AOV178A	26921-2	J-5	3	B	1.5	GL	AO	A	O	C	FT	Q	CS		028	TP-04	
											PI	2A					
											STC	Q	CS		028		
Valve Name	**RPCCW RETURN 2 REACTOR COOLANT PUMP THERMAL BARRIER**																
3CCP*AOV178B	26921-2	K-9	3	B	1.5	GL	AO	A	O	C	FT	Q	CS		028	TP-04	
											PI	2A					
											STC	Q	CS		028		
Valve Name	**RPCCW RETURN 3 RCP THERMAL BARRIER**																
3CCP*AOV178C	26921-2	H-9	3	B	1.5	GL	AO	A	O	C	FT	Q	CS		028	TP-04	
											PI	2A					
											STC	Q	CS		028		

Valve Tag	P&ID	P&ID Coor.	Safety Class	Cat.	Size	Valve Type	Act. Type	Active / Passive	Normal Position	Safety Position	Test Type	Test Freq.	Alt. Freq.	Relief Request	Deferred Just.	Tech. Pos.	Notes
Valve Name	**RPCCW RETURN 4 RCP THERMAL BARRIER**																
3CCP*AOV178D	26921-2	G-5	3	B	1.5	GL	AO	A	O	C	FT	Q	CS		028	TP-04	
											PI	2A					
											STC	Q	CS		028		
Valve Name	**TRAIN (A) RPCCW SUPPLY HEADER**																
3CCP*AOV179A	26921-2	L-2	3	B	6.0	BF	AO	A	C	C	FT	Q				TP-04	
											PI	2A					
											STC	Q					
Valve Name	**TRAIN (B) RPCCW SUPPLY HEADER**																
3CCP*AOV179B	26921-2	M-2	3	B	6.0	BF	AO	A	C	C	FT	Q				TP-04	
											PI	2A					
											STC	Q					
Valve Name	**TRAIN (A) RPCCW RETURN HEADER**																
3CCP*AOV180A	26921-2	J-2	3	B	6.0	BF	AO	A	C	C	FT	Q				TP-04	
											PI	2A					
											STC	Q					

Valve Tag	P&ID	P&ID Coor.	Safety Class	Cat.	Size	Valve Type	Act. Type	Active / Passive	Normal Position	Safety Position	Test Type	Test Freq.	Alt. Freq.	Relief Request	Deferred Just.	Tech. Pos.	Notes
Valve Name	**TRAIN (B) TPCCW RETURN HEADER**																
3CCP*AOV180B	26921-2	K-2	3	B	6.0	BF	AO	A	C	C	FT	Q				TP-04	
											PI	2A					
											STC	Q					
Valve Name	**'A' RX PLANT COMPONENT COOL WATER NON-SAFETY HDR**																
3CCP*AOV194A	26921-1	B-6	3	B	16.0	BF	AO	A	O	C	FT	Q				TP-04	
											PI	2A					
											STC	Q					
Valve Name	**TRAIN 'B' REACTOR PLANT COMPONENT COOLING WATER NON-SAFETY HEADER**																
3CCP*AOV194B	26921-1	B-7	3	B	12.0	BF	AO	A	O	C	FT	Q				TP-04	
											PI	2A					
											STC	Q					
Valve Name	**SUPPLY/RETURN PRIMARY ISOLATION**																
3CCP*AOV197A	26921-1	L-5	3	B	16.0	BF	AO	A	O	C	FT	Q				TP-04	
											PI	2A					
											STC	Q					

Valve Tag	P&ID	P&ID Coor.	Safety Class	Cat.	Size	Valve Type	Act. Type	Active / Passive	Normal Position	Safety Position	Test Type	Test Freq.	Alt. Freq.	Relief Request	Deferred Just.	Tech. Pos.	Notes
Valve Name	**RPCC WATER SUPPLY/RETURN SECONDARY ISOL**																
3CCP*AOV197B	26921-1	L-6	3	B	12.0	BF	AO	A	O	C	FT	Q				TP-04	
											PI	2A					
											STC	Q					
Valve Name	**TRAIN "A" REACTOR PLANT CLOSED COOLING WATER NON-SAFETY HEADER**																
3CCP*AOV19A	26921-1	C-6	3	B	16.0	BF	AO	A	O	C	FT	Q				TP-04	
											PI	2A					
											STC	Q					
Valve Name	**REACTOR PLANT COMPONENT COOLING WATER SUPPLY/RETURN PRIMARY ISOL**																
3CCP*AOV19B	26921-1	C-7	3	B	12.0	BF	AO	A	O	C	FT	Q				TP-04	
											PI	2A					
											STC	Q					
Valve Name	**(A) RHR HEAT EXCHANGE COOLING OUTLET ISOLATION**																
3CCP*FV66A	26921-1	M-2	3	B	18.0	BF	AO	A	C	O	FT	Q				TP-04	
											PI	2A					
											STO	Q					

Valve Tag	P&ID	P&ID Coor.	Safety Class	Cat.	Size	Valve Type	Act. Type	Active / Passive	Normal Position	Safety Position	Test Type	Test Freq.	Alt. Freq.	Relief Request	Deferred Just.	Tech. Pos.	Notes
Valve Name	**(B) RHR HEAT EXCHANGE COOLING OUTLET ISOLATION**																
3CCP*FV66B	26921-1	F-9	3	B	18.0	BF	AO	A	C	O	FT	Q				TP-04	
											PI	2A					
											STO	Q					
Valve Name	**TRAIN B CHILLER WATER SUPPLY/RETURN**																
3CCP*MOV222	26921-2	H-2	3	B	4.0	BF	MO	A	C	O/C	PI	2A					
											STC	Q					
											STO	Q					
Valve Name	**TRAIN A CHILLER WATER SUPPLY/RETURN**																
3CCP*MOV223	26921-2	G-2	3	B	4.0	BF	MO	A	C	O/C	PI	2A					
											STC	Q					
											STO	Q					
Valve Name	**TRAIN A CHILLED WATER SUPPLY/RETURN**																
3CCP*MOV224	26921-2	F-4	3	B	4.0	BF	MO	A	C	O/C	PI	2A					
											STC	Q					
											STO	Q					

Valve Tag	P&ID	P&ID Coor.	Safety Class	Cat.	Size	Valve Type	Act. Type	Active / Passive	Normal Position	Safety Position	Test Type	Test Freq.	Alt. Freq.	Relief Request	Deferred Just.	Tech. Pos.	Notes
Valve Name	TRAIN A CHILLED WATER SUPPLY/RETURN																
3CCP*MOV225	26921-2	F-4	3	B	4.0	BF	MO	A	C	O/C	PI	2A					
											STC	Q					
											STO	Q					
Valve Name	TRAIN B CHILLER WATER RETURN																
3CCP*MOV226	26921-2	M-5	3	B	4.0	BF	MO	A	C	O/C	PI	2A					
											STC	Q					
											STO	Q					
Valve Name	TRAIN B CHILLED WATER SUPPLY/RETURN																
3CCP*MOV227	26921-2	M-4	3	B	4.0	BF	MO	A	C	O/C	PI	2A					
											STC	Q					
											STO	Q					
Valve Name	TRAIN B CHILLED WATER SUPPLY/RETURN																
3CCP*MOV228	26921-2	L-5	3	B	4.0	BF	MO	A	C	O/C	PI	2A					
											STC	Q					
											STO	Q					

Valve Tag	P&ID	P&ID Coor.	Safety Class	Cat.	Size	Valve Type	Act. Type	Active / Passive	Normal Position	Safety Position	Test Type	Test Freq.	Alt. Freq.	Relief Request	Deferred Just.	Tech. Pos.	Notes
Valve Name	TRAIN B CHILLED WATER SUPPLY/RETURN ISOLATION																
3CCP*MOV229	26921-2	L-4	3	B	4.0	BF	MO	A	C	O/C	PI	2A					
											STC	Q					
											STO	Q					
Valve Name	RPCCW SUPPLY HEADERS CTMT PENETRATION (39 - OUTSIDE)																
3CCP*MOV45A	26921-2	B-2	2	A	10.0	BF	MO	A	O	C	LJ	J					
											PI	2A					
											STC	Q					
Valve Name	TRAIN B RPCCW CONTAINMENT RETURN HEADER ISOLATION (40-OUTSIDE)																
3CCP*MOV45B	26921-2	C-9	2	A	10.0	BF	MO	A	O	C	LJ	J					
											PI	2A					
											STC	Q					
Valve Name	TRAIN 'A' RPCCW CONTAINMENT RETURN INNER ISOLATION (41-INSIDE)																
3CCP*MOV48A	26921-2	E-2	2	A	10.0	BF	MO	A	O	C	LJ	J					
											PI	2A					
											STC	Q					

Valve Tag	P&ID	P&ID Coor.	Safety Class	Cat.	Size	Valve Type	Act. Type	Active / Passive	Normal Position	Safety Position	Test Type	Test Freq.	Alt. Freq.	Relief Request	Deferred Just.	Tech. Pos.	Notes
Valve Name	TRAIN (B) RPCCW CONTAINMENT RETURN INLET ISOLATION (42-INSIDE)																
3CCP*MOV48B	26921-2	E-10	2	A	10.0	BF	MO	A	O	C	LJ	J					
											PI	2A					
											STC	Q					
Valve Name	TRAIN RPCCW CONTAINMENT RETURN OUTER ISOLATION (41-OUTSIDE)																
3CCP*MOV49A	26921-2	D-2	2	A	10.0	BF	MO	A	O	C	LJ	J					
											PI	2A					
											STC	Q					
Valve Name	TRAIN B RPCCW CONTAINMENT RETURN OUTER ISOLATION (42-OUTSIDE)																
3CCP*MOV49B	26921-2	C-10	2	A	10.0	BF	MO	A	O	C	LJ	J					
											PI	2A					
											STC	Q					
Valve Name	RHR Pump A Seal Cooler Relief																
3CCP*RV239A	26921-1	L-3	3	C	0.75	RV	SA	A	C	O/C	SRV	10A					
Valve Name	RHR Pump B Seal Cooler Relief																
3CCP*RV239B	26921-1	D-10	3	C	0.75	RV	SA	A	C	O/C	SRV	10A					
Valve Name	REACTOR COOLANT PUMP UPPER BEARING																
3CCP*RV258A	26921-2	K-3	3	C	0.75	RV	SA	A	C	O/C	SRV	10A					

Valve Tag	P&ID	P&ID Coor.	Safety Class	Cat.	Size	Valve Type	Act. Type	Active / Passive	Normal Position	Safety Position	Test Type	Test Freq.	Alt. Freq.	Relief Request	Deferred Just.	Tech. Pos.	Notes
Valve Name	REACTOR COOLANT PUMP UPPER BEARING																
3CCP*RV258B	26921-2	I-7	3	C	0.75	RV	SA	A	C	O/C	SRV	10A					
Valve Name	REACTOR COOLANT PUMP UPPER BEARING																
3CCP*RV258C	26921-2	G-7	3	C	0.75	RV	SA	A	C	O/C	SRV	10A					
Valve Name	REACTOR COOLANT PUMP UPPER BEARING																
3CCP*RV258D	26921-2	H-3	3	C	0.75	RV	SA	A	C	O/C	SRV	10A					
Valve Name	CONTAINMENT PENETRATION (A) RELIEF (41-OUTSIDE)																
3CCP*RV275A	26921-2	D-3	2	C	0.75	RV	SA	A	C	O/C	LJ	J					
											SRV	10A					
Valve Name	CONTAINMENT PEN (B) RELIEF (42-OUTSIDE)																
3CCP*RV275B	26921-2	D-10	2	C	0.75	RV	SA	A	C	O/C	LJ	J					
											SRV	10A					
Valve Name	RCP (A) THERMAL BARRIER RELIEF																
3CCP*RV54A	26921-2	K-4	3	C	1	RV	SA	A	C	O/C	SRV	10A					
Valve Name	RCP (B) BARRIER RELIEF																
3CCP*RV54B	26921-2	I-8	3	C	1	RV	SA	A	C	O/C	SRV	10A					
Valve Name	RCP (C) THERMAL BARRIER RELIEF																
3CCP*RV54C	26921-2	G-8	3	C	1	RV	SA	A	C	O/C	SRV	10A					

Valve Tag	P&ID	P&ID Coor.	Safety Class	Cat.	Size	Valve Type	Act. Type	Active / Passive	Normal Position	Safety Position	Test Type	Test Freq.	Alt. Freq.	Relief Request	Deferred Just.	Tech. Pos.	Notes
Valve Name	REACTOR COOLANT PUMP THERMAL BARRIER RELIEF																
3CCP*RV54D	26921-2	H-4	3	C	1	RV	SA	A	C	O/C	SRV	10A					
Valve Name	Fuel Pool Cooler Relief																
3CCP*RV59A	26921-1	J-2	3	C	0.75	RV	SA	A	C	O/C	SRV	10A					
Valve Name	Fuel Pool Cooler Relief																
3CCP*RV59B	26921-1	B-9	3	C	0.75	RV	SA	A	C	O/C	SRV	10A					
Valve Name	RHR Heat Exchanger A Relief																
3CCP*RV64A	26921-1	N-3	3	C	0.75	RV	SA	A	C	O/C	SRV	10A					
Valve Name	RHR Heat Exchanger B Relief																
3CCP*RV64B	26921-1	F-10	3	C	0.75	RV	SA	A	C	O/C	SRV	10A					
Valve Name	COMP COOLING HEAT EXCHANGER OUTLET TEMPERATURE CONTROL VALVES (2)																
3CCP*TV32A	26921-1	I-6	3	B	18.0	BF	AO	A	O	O	FT	Q				TP-05	
Valve Name	COMP COOLING HEAT EXCHANGER OUTLET TEMPERATURE CONTROL VALVES (2)																
3CCP*TV32B	26921-1	I-8	3	B	18.0	BF	AO	A	O	O	FT	Q				TP-05	
Valve Name	COMP COOLING HEAT EXCHANGER OUTLET TEMPERATURE CONTROL VALVES (2)																
3CCP*TV32C	26921-1	I-7	3	B	18.0	BF	AO	A	O	O	FT	Q				TP-05	
Valve Name	RPCCW PUMP "A" DISCHARGE CHECK																
3CCP*V001	26921-1	F-5	3	C	18.0	CS	SA	A	SYS	O/C	FSC	Q					
											FSO	Q					

Valve Tag	P&ID	P&ID Coor.	Safety Class	Cat.	Size	Valve Type	Act. Type	Active / Passive	Normal Position	Safety Position	Test Type	Test Freq.	Alt. Freq.	Relief Request	Deferred Just.	Tech. Pos.	Notes
Valve Name	**RPCCW PUMP "C" DISCHARGE CHECK**																
3CCP*V002	26921-1	F-6	3	C	18.0	CS	SA	A	SYS	O/C	FSC	Q					
											FSO	Q					
Valve Name	**CHECK VALVE RPCCW PP B DIS. CHK.**																
3CCP*V003	26921-1	F-7	3	C	18.0	CS	SA	A	SYS	O/C	FSC	Q					
											FSO	Q					
Valve Name	**CHECK VALVE (39-INSIDE)**																
3CCP*V018	26921-2	E-2	2	AC	10.0	CS	SA	A	SYS	C	FSC	Q	CM			CM-39	
											FSO	Q	CM			CM-39	
											LJ	J					
Valve Name	**CHECK VALVE**																
3CCP*V027	26921-2	H-5	3	C	2.0	CL	SA	A	SYS	C	FSC	Q	CM			CM-30	
											FSO	Q	CM			CM-30	
Valve Name	**CHECK VALVE**																
3CCP*V038	26921-2	K-5	3	C	2.0	CL	SA	A	SYS	C	FSC	Q	CM			CM-30	
											FSO	Q	CM			CM-30	

Valve Tag	P&ID	P&ID Coor.	Safety Class	Cat.	Size	Valve Type	Act. Type	Active / Passive	Normal Position	Safety Position	Test Type	Test Freq.	Alt. Freq.	Relief Request	Deferred Just.	Tech. Pos.	Notes
Valve Name	CCP 'B' LOOP INSIDE CONTAINMENT ISOLATION (40-INSIDE)																
3CCP*V060	26921-2	E-9	2	AC	10.0	CS	SA	A	SYS	C	FSC	Q	CM			CM-39	
											FSO	Q	CM			CM-39	
											LJ	J					
Valve Name	CHECK VALVE																
3CCP*V063	26921-2	G-8	3	C	2.0	CL	SA	A	SYS	C	FSC	Q	CM			CM-30	
											FSO	Q	CM			CM-30	
Valve Name	CHECK VALVE																
3CCP*V074	26921-2	I-8	3	C	2.0	CL	SA	A	SYS	C	FSC	Q	CM			CM-30	
											FSO	Q	CM			CM-30	
Valve Name	DEMINERALIZED H20 SUPPLY INSIDE CTMT,CTMT PENETRATION(70-INSIDE)																
3CCP*V886	26921-1	D-2	2	A	2.0	GT	HA	P	LC	C	LJ	J					
Valve Name	DEMINERALIZED H20 SUPPLY INSIDE CTMT,CTMT PENETRATION(70-OUTSIDE)																
3CCP*V887	26921-1	C-2	2	A	2.0	GT	HA	P	LC	C	LJ	J					
Valve Name	GATE VALVE																
3CCP*V965	26921-1	J-6	3	B	0.75	GT	HA	A	O	C	FSC	2A					
Valve Name	GATE VALVE																
3CCP*V966	26921	J-9	3	B	0.75	GT	HA	A	O	C	FSC	2A					

Valve Tag	P&ID	P&ID Coor.	Safety Class	Cat.	Size	Valve Type	Act. Type	Active / Passive	Normal Position	Safety Position	Test Type	Test Freq.	Alt. Freq.	Relief Request	Deferred Just.	Tech. Pos.	Notes
Valve Name	SAFETY INJECT PUMP COOLING SURGE TANK FILL VALVE INLET																
3CCP*V981	26921-1	J-4	3	B	1.0	GL	HA	A	O	C	FSC	2A					
Valve Name	CHG PMP COOLING SURGE TK FILL VLV INLET ISOLATION																
3CCP*V986	26921-2	A-7	3	B	1.0	GL	HA	A	O	C	FSC	2A					
Valve Name	CHILLED WATER SUPPLY CTMT PENETRATION (38-OUTSIDE) O/B																
3CDS*CTV38A	26922-1	L-5	2	A	10.0	BF	AO	A	O	C	FT	Q	CS		032	TP-04	
											LJ	J					
											PI	2A					
											STC	Q	CS		032		
Valve Name	CHILLED WATER SUPPLY CTMT PENETRATION (72-OUTSIDE) O/B																
3CDS*CTV38B	26922-1	J-7	2	A	10.0	BF	AO	A	O	C	FT	Q	CS		032	TP-04	
											LJ	J					
											PI	2A					
											STC	Q	CS		032		
Valve Name	CHILLED WATER RETURN CTMT PENETRATION (116-OUTSIDE)																
3CDS*CTV39A	26922-1	L-1	2	A	10.0	BF	AO	A	O	C	FT	Q	CS		032	TP-04	
											LJ	J					
											PI	2A					
											STC	Q	CS		032		

Valve Tag	P&ID	P&ID Coor.	Safety Class	Cat.	Size	Valve Type	Act. Type	Active / Passive	Normal Position	Safety Position	Test Type	Test Freq.	Alt. Freq.	Relief Request	Deferred Just.	Tech. Pos.	Notes
Valve Name	CHILLED WATER RETURN CTMT PENETRATION (45-OUTSIDE)HEADER ISOL																
3CDS*CTV39B	26922-1	J-10	2	A	10.0	BF	AO	A	O	C	FT	Q	CS		032	TP-04	
											LJ	J					
											PI	2A					
											STC	Q	CS		032		
Valve Name	CHILLED WATER RETURN CTMT PENETRATION (116-INSIDE) EDUCTIVE																
3CDS*CTV40A	26922-1	M-1	2	A	10.0	BF	AO	A	O	C	FT	Q	CS		032	TP-04	
											LJ	J					
											PI	2A					
											STC	Q	CS		032		
Valve Name	CHILLED WATER RETURN CTMT PENETRATION (45-INSIDE) EDUCTION																
3CDS*CTV40B	26922-1	L-10	2	A	10.0	BF	AO	A	O	C	FT	Q	CS		032	TP-04	
											LJ	J					
											PI	2A					
											STC	Q	CS		032		
Valve Name	CHILLED WATER SUPPLY CTMT PENETRATION (38-INSIDE)																
3CDS*CTV91A	26922-1	M-5	2	A	10.0	BF	AO	A	O	C	FT	Q	CS		032	TP-04	
											LJ	J					
											PI	2A					
											STC	Q	CS		032		

Valve Tag	P&ID	P&ID Coor.	Safety Class	Cat.	Size	Valve Type	Act. Type	Active / Passive	Normal Position	Safety Position	Test Type	Test Freq.	Alt. Freq.	Relief Request	Deferred Just.	Tech. Pos.	Notes
Valve Name	CHILLED WATER SUPPLY CTMT PENETRATION (72-INSIDE) ENDUCTIVE																
3CDS*CTV91B	26922-1	L-7	2	A	10.0	BF	AO	A	O	C	FT	Q	CS		032	TP-04	
											LJ	J					
											PI	2A					
											STC	Q	CS		032		
Valve Name	CHILLED WATER SUPPLY RELIEF TO CTMT FLOOR DRAINS (38-OUTSIDE)																
3CDS*RV105A	26922-1	L-6	2	AC	0.75	RV	SA	A	C	O/C	LJ	J					
											SRV	10A					
Valve Name	CHILLED WATER SUPPLY RELIEF TO CTMT FLOOR DRAINS (72-OUTSIDE)																
3CDS*RV105B	26922-1	J-7	2	AC	0.75	RV	SA	A	C	O/C	LJ	J					
											SRV	10A					
Valve Name	CHILLED WATER SUPPLY RELIEF TO CTMT FLOOR DRAINS (116-OUTSIDE)																
3CDS*RV106A	26922-1	L-3	2	AC	0.75	RV	SA	A	C	O/C	LJ	J					
											SRV	10A					
Valve Name	B TRAIN RETURN HEADER RELIEF (45-OUTSIDE)																
3CDS*RV106B	26922-1	J-10	2	AC	0.75	RV	SA	A	C	O/C	LJ	J					
											SRV	10A					

Valve Tag	P&ID	P&ID Coor.	Safety Class	Cat.	Size	Valve Type	Act. Type	Active / Passive	Normal Position	Safety Position	Test Type	Test Freq.	Alt. Freq.	Relief Request	Deferred Just.	Tech. Pos.	Notes
Valve Name	**CHARGING LOOP 1 ISOLATION**																
3CHS*AV8146	26904-1	B-2	2	B	3.0	GL	AO	A	O/C	O	FT	Q	CS		026	TP-04	
											PI	2A					
											STO	Q	CS		026		
Valve Name	**CHARGING LOOP 4 ISOLATION**																
3CHS*AV8147	26904-1	D-2	2	B	3.0	GL	AO	A	O/C	O	FT	Q	CS		026	TP-04	
											PI	2A					
											STO	Q	CS		026		
Valve Name	**(A) ORIFICE ISOLATION VALVE**																
3CHS*AV8149A	26904-1	G-2	2	B	2.0	GL	AO	A	O	C	FT	Q	CS		027	TP-04	
											PI	2A					
											STC	Q	CS		027		
Valve Name	**"B" LETDOWN ORIFICE ISOLATION**																
3CHS*AV8149B	26904-1	H-2	2	B	2.0	GL	AO	A	O	C	FT	Q	CS		027	TP-04	
											PI	2A					
											STC	Q	CS		027		

Valve Tag	P&ID	P&ID Coor.	Safety Class	Cat.	Size	Valve Type	Act. Type	Active / Passive	Normal Position	Safety Position	Test Type	Test Freq.	Alt. Freq.	Relief Request	Deferred Just.	Tech. Pos.	Notes
Valve Name	**(C) LETDOWN ORIFICE ISOLATION**																
3CHS*AV8149C	26904-1	H-2	2	B	2.0	GL	AO	A	O	C	FT	Q	CS		027	TP-04	
											PI	2A					
											STC	Q	CS		027		
Valve Name	**REACTOR COOLANT LETDOWN CTMT PENETRATION (24 - OUTSIDE)**																
3CHS*CV8152	26904-1	J-2	2	A	3.0	GL	AO	A	O	C	FT	Q	CS		005	TP-04	
											LJ	J					
											PI	2A					
											STC	Q	CS		005		
Valve Name	**REACTOR COOLANT LETDOWN CTMT PENETRATION (24-INSIDE)**																
3CHS*CV8160	26904-1	I-2	2	A	3.0	GL	AO	A	O	C	FT	Q	CS		005	TP-04	
											LJ	J					
											PI	2A					
											STC	Q	CS		005		
Valve Name	**MAKEUP TO CHARGING PUMP SUCTION ISOLATION**																
3CHS*FCV110B	26904-1	J-6	2	B	2.0	GL	AO	A	C	C	FT	Q				TP-04	
											PI	2A					
											STC	Q					

Valve Tag	P&ID	P&ID Coor.	Safety Class	Cat.	Size	Valve Type	Act. Type	Active / Passive	Normal Position	Safety Position	Test Type	Test Freq.	Alt. Freq.	Relief Request	Deferred Just.	Tech. Pos.	Notes
Valve Name	PRIMARY WATER SUPPLY TO BLENDER																
3CHS*FCV111A	26904-3	C-2	3	B	2.0	GL	AO	A	C	C	FT	Q				TP-04	
											PI	2A					
											STC	Q					
Valve Name	MAKEUP TO VOLUME CONTROL TANK ISOLATION																
3CHS*FCV111B	26904-1	L-7	3	B	2.0	GL	AO	A	C	C	FT	Q				TP-04	
											PI	2A					
											STC	Q					
Valve Name	CHG HDR TO SEAL WATER INJECTION FILTERS CONTROL VALVE																
3CHS*HCV182	26904-1	C-11	2	B	3.0	GL	AO	A	O	O	FT	Q	CS		030	TP-04	
											STO	Q	CS		030		
Valve Name	CHARGING HEADER FLOW CONTROL																
3CHS*HCV190A	26904-1	E-7	2	B	1.0	GL	SO	A	C	O	PI	2A					
											STO	Q					
Valve Name	CHARGING HEADER FLOW CONTROL																
3CHS*HCV190B	26904-1	E-11	2	B	1.0	GL	SO	A	C	O	PI	2A					
											STO	Q					

Valve Tag	P&ID	P&ID Coor.	Safety Class	Cat.	Size	Valve Type	Act. Type	Active / Passive	Normal Position	Safety Position	Test Type	Test Freq.	Alt. Freq.	Relief Request	Deferred Just.	Tech. Pos.	Notes
Valve Name	VOLUME CONTROL TANK OUTLET ISOLATION																
3CHS*LCV112B	26904-1	J-8	2	A	4.0	GT	MO	A	O	C	LT	2A					
											PI	Q					
											STC	Q	CS		002		
Valve Name	VOLUME CONTROL TANK OUTLET ISOLATION																
3CHS*LCV112C	26904-1	J-8	2	A	4.0	GT	MO	A	O	C	LT	2A					
											PI	Q					
											STC	Q	CS		002		
Valve Name	RWST SUPPLY TO CHARGING PUMP SUCTION																
3CHS*LCV112D	26904-1	J-9	2	B	8.0	GT	MO	A	C	O/C	PI	2A					
											STC	Q					
											STO	Q					
Valve Name	RWST SUPPLY TO CHARGING PUMP SUCTION																
3CHS*LCV112E	26904-1	J-10	2	B	8.0	GT	MO	A	C	O/C	PI	2A					
											STC	Q					
											STO	Q					

Valve Tag	P&ID	P&ID Coor.	Safety Class	Cat.	Size	Valve Type	Act. Type	Active / Passive	Normal Position	Safety Position	Test Type	Test Freq.	Alt. Freq.	Relief Request	Deferred Just.	Tech. Pos.	Notes
Valve Name	SEAL WATER RETURN FROM RCP CTMT PENETRATION (23 - OUTSIDE)																
3CHS*MV8100	26904-1	A-6	2	A	2.0	GL	MO	A	O	C	LJ	J					
											PI	2A					
											STC	Q	CS		004		
Valve Name	BORIC ACID FILTER TO CHARGING PUMP																
3CHS*MV8104	26904-3	F-4	2	B	2.0	GL	MO	A	C	O/C	PI	2A					
											STO	Q					
Valve Name	CHARGING FLOW CONTROL VALVE ISOLATION (26-OUTSIDE)																
3CHS*MV8105	26904-1	G-5	2	A	3.0	GT	MO	A	O	C	LJ	J					
											PI	2A					
											STC	Q	CS		005		
Valve Name	CHARGING FLOW CONTROLLER ISOLATION																
3CHS*MV8106	26904-1	G-5	2	B	3.0	GT	MO	A	O	C	PI	2A					
											STC	Q	CS		005		
Valve Name	RCP 'A' SEAL SUPPLY ISOLATION CTMT PENETRATION (16-OUTSIDE)																
3CHS*MV8109A	26903	H-7	2	A	2.0	GL	MO	A	O	O/C	LJ	J					
											PI	2A					
											STC	Q	CS		004		

Valve Tag	P&ID	P&ID Coor.	Safety Class	Cat.	Size	Valve Type	Act. Type	Active / Passive	Normal Position	Safety Position	Test Type	Test Freq.	Alt. Freq.	Relief Request	Deferred Just.	Tech. Pos.	Notes
Valve Name	RCP 'B' SEAL SUPPLY ISOLATION CTMT PENETRATION (17-OUTSIDE)																
3CHS*MV8109B	26903	E-7	2	A	2.0	GL	MO	A	O	O/C	LJ	J					
											PI	2A					
											STC	Q	CS		004		
Valve Name	RCP 'C' SEAL SUPPLY ISOLATION CTMT PENETRATION (18-OUTSIDE)																
3CHS*MV8109C	26903	K-7	2	A	2.0	GL	MO	A	O	O/C	LJ	J					
											PI	2A					
											STC	Q	CS		004		
Valve Name	RCP 'D' SEAL SUPPLY ISOLATION CTMT PENETRATION (19-OUTSIDE)																
3CHS*MV8109D	26903	A-7	2	A	2.0	GL	MO	A	O	O/C	LJ	J					
											PI	2A					
											STC	Q	CS		004		
Valve Name	CHARGING RECIRCULATING ISOLATION TO SEALWATER																
3CHS*MV8110	26904-1	E-8	2	B	2.0	GL	MO	A	O	O/C	PI	2A					
											STC	Q					
Valve Name	CHARGING PUMP 3A RECIRCULATION ISOLATION																
3CHS*MV8111A	26904-1	G-8	2	B	2.0	GL	MO	A	O	O/C	PI	2A					
											STC	Q					

Valve Tag	P&ID	P&ID Coor.	Safety Class	Cat.	Size	Valve Type	Act. Type	Active / Passive	Normal Position	Safety Position	Test Type	Test Freq.	Alt. Freq.	Relief Request	Deferred Just.	Tech. Pos.	Notes
Valve Name	CHARGING PUMP 3B RECIRCULATION ISOLATION																
3CHS*MV8111B	26904-1	G-10	2	B	2.0	GL	MO	A	O	O/C	PI	2A					
											STC	Q					
Valve Name	CHARGING PUMP 3C RECIRCULATION ISOLATION																
3CHS*MV8111C	26904-1	G-9	2	B	2.0	GL	MO	A	O	O/C	PI	2A					
											STC	Q					
Valve Name	SEALWATER RETURN FROM RCP CTMT PENET.(23-INSIDE)																
3CHS*MV8112	26904-1	A-7	2	A	2.0	GL	MO	A	O	C	LJ	J					
											PI	2A					
											STC	Q	CS		004		
Valve Name	BYPASS CONTROL VALVE																
3CHS*MV8116	26904-1	G-7	2	B	1.0	GT	MO	A	C	O	PI	2A					
											STO	Q					
Valve Name	CHARGING PUMP A/C DISCHARGE ISOLATION																
3CHS*MV8438A	26904-1	E-8	2	B	4.0	GT	MO	A	O	O/C	PI	2A					
											STC	Q					
Valve Name	CHARGING PUMP B/C DISCHARGE ISOLATION																
3CHS*MV8438B	26904-1	E-11	2	B	4.0	GT	MO	A	O	O/C	PI	2A					
											STC	Q					

Valve Tag	P&ID	P&ID Coor.	Safety Class	Cat.	Size	Valve Type	Act. Type	Active / Passive	Normal Position	Safety Position	Test Type	Test Freq.	Alt. Freq.	Relief Request	Deferred Just.	Tech. Pos.	Notes
Valve Name	CHARGING HEADER TRANSFER CONNECTION																
3CHS*MV8438C	26904-1	D-9	2	B	4.0	GT	MO	A	O	O/C	PI	2A					
											STC	Q					
Valve Name	LOW PRESSURE SAFETY INJECTION CHARGING PUMP SUCTION ISOLATION																
3CHS*MV8468A	26904-1	J-9	2	B	8.0	GT	MO	A	O	O/C	PI	2A					
											STC	Q					
Valve Name	LOW PRESSURE SAFETY INJECTION CHARGING PUMP SUCTION ISOLATION																
3CHS*MV8468B	26904-1	J-10	2	B	8.0	GT	MO	A	O	O/C	PI	2A					
											STC	Q					
Valve Name	(A) TANK GRAVITY BORATION																
3CHS*MV8507A	26904-3	M-7	2	B	3.0	GT	MO	A	C	O/C	PI	2A					
											STO	Q	CS		003		
Valve Name	(B) TANK GRAVITY BORATION																
3CHS*MV8507B	26904-3	K-7	2	B	3.0	GT	MO	A	C	O/C	PI	2A					
											STO	Q	CS		003		

Valve Tag	P&ID	P&ID Coor.	Safety Class	Cat.	Size	Valve Type	Act. Type	Active / Passive	Normal Position	Safety Position	Test Type	Test Freq.	Alt. Freq.	Relief Request	Deferred Just.	Tech. Pos.	Notes
Valve Name	**CHARGING PUMP RELIEF TRAIN (A) ISOLATION**																
3CHS*MV8511A	26904-4	J-7	2	A	2.0	GT	MO	A	C	O/C	LT	2A					
											PI	2A					
											STC	Q	CS		037		
											STO	Q	CS		037		
Valve Name	**CHARGING PUMP RELIEF TRAIN (B) ISOLATION**																
3CHS*MV8511B	26904-4	K-9	2	A	2.0	GT	MO	A	C	O/C	LT	2A					
											PI	2A					
											STC	Q	CS		037		
											STO	Q	CS		037		
Valve Name	**CHARGING PUMP RELIEF ISOLATION TRAIN B**																
3CHS*MV8512A	26904-4	K-7	2	A	2.0	GT	MO	A	O	O/C	LT	2A					
											PI	2A					
											STC	Q					
Valve Name	**CHARGING PUMP RELIEF ISOLATION**																
3CHS*MV8512B	26904-4	K-9	2	A	2.0	GT	MO	A	O	O/C	LT	2A					
											PI	2A					
											STC	Q					

Valve Tag	P&ID	P&ID Coor.	Safety Class	Cat.	Size	Valve Type	Act. Type	Active / Passive	Normal Position	Safety Position	Test Type	Test Freq.	Alt. Freq.	Relief Request	Deferred Just.	Tech. Pos.	Notes
Valve Name	SEAL RETURN LINE IN CONTAINMENT RELIEF																
3CHS*RV8113	26904-1	B-7	2	AC	0.75	RV	SA	A	C	O/C	LJ	J					
											SRV	10A					
Valve Name	LETDOWN LINE INSIDE CONTAINMENT RELIEF (24-INSIDE)																
3CHS*RV8117	26904-1	I-2	2	AC	2.5	RV	SA	A	C	O/C	LJ	J					
											SRV	10A					
Valve Name	SEAL RETURN LINE INLET CONTAINMENT RELIEF																
3CHS*RV8121	26904-1	B-8	2	C	3.0	RV	SA	A	C	O/C	SRV	10A					
Valve Name	SEAL WATER HEAT EXCHANGER RELIEF																
3CHS*RV8123	26904-1	B-4	2	C	3.0	RV	SA	A	C	O	SRV	10A					
Valve Name	LPSI TO CHARGING PUMP SUCTION HEADER RELIEF																
3CHS*RV8124	26904-1	J-9	2	C	1.5	RV	SA	A	C	O	SRV	10A					
Valve Name	LOOP FILL LINE OVER PRESSURE RELIEF																
3CHS*RV8351	26904-1	D-3	2	AC	0.75	RV	SA	A	C	O/C	LJ	J					
											SRV	10A					
Valve Name	VOLUME CONTROL TANK OUTLET TO CHARGING PUMP SUCTION																
3CHS*V042	26904	J-10	2	C	4.0	CS	SA	A	SYS	O/C	FSC	Q	CM			CM-01	
											FSO	Q	CM			CM-01	

Valve Tag	P&ID	P&ID Coor.	Safety Class	Cat.	Size	Valve Type	Act. Type	Active / Passive	Normal Position	Safety Position	Test Type	Test Freq.	Alt. Freq.	Relief Request	Deferred Just.	Tech. Pos.	Notes
Valve Name	**CHARGING PUMP A DISCHARGE CHECK**																
3CHS*V046	26904-1	F-8	2	C	4.0	CH	SA	A	SYS	O/C	FSC	Q	CM			CM-40	
											FSO	Q	CM			CM-40	
Valve Name	**CHARGING PUMP C DISCHARGE CHECK**																
3CHS*V047	26904-1	F-10	2	C	4.0	CH	SA	A	SYS	O/C	FSC	Q	CM			CM-40	
											FSO	Q	CM			CM-40	
Valve Name	**CHARGING PUMP B DISCHARGE CHECK**																
3CHS*V048	26904-1	F-11	2	C	4.0	CH	SA	A	SYS	O/C	FSC	Q	CM			CM-40	
											FSO	Q	CM			CM-40	
Valve Name	**REACTOR COOLANT CHARGING CTMT PENETRATION (26-INSIDE)**																
3CHS*V058	26904-1	F-3	2	AC	3.0	CS	SA	A	SYS	O/C	FSC	Q	CM			CM-31	
											FSO	Q	CM			CM-31	
											LJ	J					
Valve Name	**RWST SPLY TO CHG. PP SUCTION CHK.**																
3CHS*V261	26904-1	K-9	2	AC	8.0	CS	SA	A	SYS	O/C	FSC	Q	CM			CM-41	
											FSO	Q	CM			CM-41	
											LT	2A					

Valve Tag	P&ID	P&ID Coor.	Safety Class	Cat.	Size	Valve Type	Act. Type	Active / Passive	Normal Position	Safety Position	Test Type	Test Freq.	Alt. Freq.	Relief Request	Deferred Just.	Tech. Pos.	Notes
Valve Name	**CHARGING PP B RECIRC. CHK.**																
3CHS*V262	26904-1	H-11	2	C	2.0	CL	SA	A	SYS	O/C	FSC	Q	CM			CM-42	
											FSO	Q	CM			CM-42	
Valve Name	**CHARGING PP C RECIRC. CHK.**																
3CHS*V263	26904-1	H-9	2	C	2.0	CL	SA	A	SYS	O/C	FSC	Q	CM			CM-42	
											FSO	Q	CM			CM-42	
Valve Name	**CHARGING PP A RECIRC. CHK.**																
3CHS*V264	26904-1	H-8	2	C	2.0	CL	SA	A	SYS	O/C	FSC	Q	CM			CM-42	
											FSO	Q	CM			CM-42	
Valve Name	**CHARGER PUMP 3B MAIN CHARGER BYPASS**																
3CHS*V270	26904-1	F-11	2	B	2.0	GL	HA	A	C	O	FSO	2A					
Valve Name	**CHARGING PUMP 3C MAIN CHARGE BYPASS (1-1/16)**																
3CHS*V271	26904-1	F-10	2	B	2.0	GL	HA	A	C	O	FSO	2A					
Valve Name	**CHARGING PUMP 3A MAIN CHARGER BYPASS**																
3CHS*V272	26904-1	F-8	2	B	2.0	GL	HA	A	C	O	FSO	2A					
Valve Name	**CHARGING TO REACTOR COOLANT PUMP SEALS MAIN ISOLATION**																
3CHS*V273	26904-1	D-11	2	B	3.0	GT	HA	A	O	C	FSC	2A					
Valve Name	**BATCH TANK TO TRANSFER PUMP 2A ISOLATION**																
3CHS*V291	26904-3	L-5	3	B	2.0	DI	HA	A	C	O	FSO	2A					

Valve Tag	P&ID	P&ID Coor.	Safety Class	Cat.	Size	Valve Type	Act. Type	Active / Passive	Normal Position	Safety Position	Test Type	Test Freq.	Alt. Freq.	Relief Request	Deferred Just.	Tech. Pos.	Notes
Valve Name	**CHECK VALVE**																
3CHS*V294	26904-3	J-5	3	C	2.0	CL	SA	A	SYS	O/C	FSC	Q	CM			CM-43	
											FSO	Q	CM			CM-43	
Valve Name	**CHECK VALVE**																
3CHS*V296	26904-3	J-6	3	C	2.0	CL	SA	A	SYS	O/C	FSC	Q	CM			CM-43	
											FSO	Q	CM			CM-43	
Valve Name	**BORIC ACID TO BLENDER CHECK VALVE**																
3CHS*V302	26904-3	D-5	3	C	2.0	CL	SA	A	SYS	C	FSC	Q	CM			CM-20	
											FSO	Q	CM			CM-20	
Valve Name	**PREVENT BACKFLOW FROM BORON INJECTION SYS. INTO PRIMARY GRADE WTR**																
3CHS*V310	26904-3	C-4	3	C	3.0	CS	SA	A	SYS	C	FSC	Q	CM			CM-32	
											FSO	Q	CM			CM-32	
Valve Name	**BORIC ACID FILTER TO CHS PUMP CHECK VALVE**																
3CHS*V320	26904-3	F-4	2	C	2.0	CL	SA	A	SYS	O	FSC	Q	CM			CM-20	
											FSO	Q	CM			CM-20	
Valve Name	**CHECK VALVE B.A.T. B GRAVITY BORATION**																
3CHS*V333	26904-3	L-7	3	C	3.0	CS	SA	A	SYS	O	FSC	Q	CM			CM-32	
											FSO	Q	CM			CM-32	

Valve Tag	P&ID	P&ID Coor.	Safety Class	Cat.	Size	Valve Type	Act. Type	Active / Passive	Normal Position	Safety Position	Test Type	Test Freq.	Alt. Freq.	Relief Request	Deferred Just.	Tech. Pos.	Notes
Valve Name	R/X COOLANT LOOP FILL CTMT PENETRATION (62-OUTSIDE)																
3CHS*V371	26904-1	D-4	2	A	2.0	GL	HA	P	LC	C	LJ	J					
Valve Name	REACTOR COOLANT LOOP FILL CTMT PENETRATION (62-INSIDE)																
3CHS*V372	26904-1	D-3	2	AC	2.0	CL	SA	P	SYS	C	FSC	Q	CM			CM-44	
											FSO	Q	CM			CM-44	
											LJ	J					
Valve Name	CTMT PENETRATION (16-INSIDE)																
3CHS*V394	26903	H-6	2	AC	2.0	CL	SA	A	SYS	O/C	FSC	Q	CM			CM-17B	
											FSO	Q	CM			CM-17B	
											LJ	J					
Valve Name	CHECK VALVE																
3CHS*V396	26903	I-5	1	C	2.0	CL	SA	A	SYS	O	FSC	Q	CM			CM-17A	
											FSO	Q	CM			CM-17A	
Valve Name	CHECK VALVE																
3CHS*V397	26903	I-5	1	C	2.0	CL	SA	A	SYS	O	FSC	Q	CM			CM-17A	
											FSO	Q	CM			CM-17A	

Valve Tag	P&ID	P&ID Coor.	Safety Class	Cat.	Size	Valve Type	Act. Type	Active / Passive	Normal Position	Safety Position	Test Type	Test Freq.	Alt. Freq.	Relief Request	Deferred Just.	Tech. Pos.	Notes
Valve Name	**CTMT PENETRATION (17-INSIDE)**																
3CHS*V434	26903	E-6	2	AC	2.0	CL	SA	A	SYS	O/C	FSC	Q	CM			CM-17B	
											FSO	Q	CM			CM-17B	
											LJ	J					
Valve Name	**CHECK VALVE**																
3CHS*V436	26903	E-5	1	C	2.0	CL	SA	A	SYS	O	FSC	Q	CM			CM-17A	
											FSO	Q	CM			CM-17A	
Valve Name	**CHECK VALVE**																
3CHS*V437	26903	E-5	1	C	2.0	CL	SA	A	SYS	O	FSC	Q	CM			CM-17A	
											FSO	Q	CM			CM-17A	
Valve Name	**CTMT PENETRATION (18-INSIDE)**																
3CHS*V467	26903	K-6	2	AC	2.0	CL	SA	A	SYS	O/C	FSC	Q	CM			CM-17B	
											FSO	Q	CM			CM-17B	
											LJ	J					
Valve Name	**CHECK VALVE**																
3CHS*V469	26903	L-5	1	C	2.0	CL	SA	A	SYS	O	FSC	Q	CM			CM-17A	
											FSO	Q	CM			CM-17A	

Valve Tag	P&ID	P&ID Coor.	Safety Class	Cat.	Size	Valve Type	Act. Type	Active / Passive	Normal Position	Safety Position	Test Type	Test Freq.	Alt. Freq.	Relief Request	Deferred Just.	Tech. Pos.	Notes
Valve Name	**CHECK VALVE**																
3CHS*V470	26903	L-5	1	C	2.0	CL	SA	A	SYS	O	FSC	Q	CM			CM-17A	
											FSO	Q	CM			CM-17A	
Valve Name	**CTMT PENETRATION (19-INSIDE)**																
3CHS*V501	26903	A-6	2	AC	2.0	CL	SA	A	SYS	O/C	FSC	Q	CM			CM-17B	
											FSO	Q	CM			CM-17B	
											LJ	J					
Valve Name	**CHECK VALVE**																
3CHS*V503	26903	A-5	1	C	2.0	CL	SA	A	SYS	O	FSC	Q	CM			CM-17A	
											FSO	Q	CM			CM-17A	
Valve Name	**CHECK VALVE**																
3CHS*V504	26903	B-5	1	C	2.0	CL	SA	A	SYS	O	FSC	Q	CM			CM-17A	
											FSO	Q	CM			CM-17A	
Valve Name	**B.A.T. A GRAVITY BORATION CHK.**																
3CHS*V711	26904-3	L-7	3	C	3.0	CS	SA	A	SYS	O	FSC	Q	CM			CM-32	
											FSO	Q	CM			CM-32	

Valve Tag	P&ID	P&ID Coor.	Safety Class	Cat.	Size	Valve Type	Act. Type	Active / Passive	Normal Position	Safety Position	Test Type	Test Freq.	Alt. Freq.	Relief Request	Deferred Just.	Tech. Pos.	Notes
Valve Name	**CTMT ATMOSPHERE MONITOR SUCTION CTMT PENETRATION (32-OUTSIDE)**																
3CMS*CTV20	26954-1	E-4	2	A	1.0	GL	AO	A	O	C	FT	Q				TP-04	
											LJ	J					
											PI	2A					
											STC	Q					
Valve Name	**CTMT ATMOSPHERE MONITOR SUCTION CTMT PENETRATION (32-OUTSIDE)**																
3CMS*CTV21	26954-1	F-4	2	A	1.0	GL	AO	A	O	C	FT	Q				TP-04	
											LJ	J					
											PI	2A					
											STC	Q					
Valve Name	**CTMT ATMOSPHERE MONITOR DISCHARGE CTMT PENETRATION (63-OUTSIDE)**																
3CMS*CTV23	26954-1	F-2	2	A	1.0	GL	AO	A	O	C	FT	Q				TP-04	
											LJ	J					
											PI	2A					
											STC	Q					
Valve Name	**CTMT ATMOSPHERE MONITOR DISCHARGE CTMT PENETRATION (63-INSIDE)**																
3CMS*MOV24	26954-1	B-2	2	A	1.0	GL	MO	A	O	C	LJ	J					
											PI	2A					
											STC	Q					

Valve Tag	P&ID	P&ID Coor.	Safety Class	Cat.	Size	Valve Type	Act. Type	Active / Passive	Normal Position	Safety Position	Test Type	Test Freq.	Alt. Freq.	Relief Request	Deferred Just.	Tech. Pos.	Notes
Valve Name	**CTMT VACUUM CTMT PENETRATION (37-INSIDE)**																
3CVS*AOV23	26953	G-2	2	A	8.0	BF	AO	P	C	C	LJ	J					
											PI	2A					
Valve Name	**CTMT VACUUM PUMP SUCTION CTMT PENETRATION (35-OUTSIDE)**																
3CVS*CTV20A	26953-1	F-3	2	A	2.0	DI	AO	A	C	C	FT	Q				TP-04	
											LT	J					
											PI	2A					
											STC	Q					
Valve Name	**CTMT VACUUM PUMP SUCTION CTMT PENETRATION (36-OUTSIDE)**																
3CVS*CTV20B	26953-1	F-5	2	A	2.0	DI	AO	A	C	C	FT	Q				TP-04	
											LT	J					
											PI	2A					
											STC	Q					
Valve Name	**CTMT VACUUM PUMP SUCTION CTMT PENETRATION (35-OUTSIDE)**																
3CVS*CTV21A	26953-1	E-3	2	A	2.0	DI	AO	A	C	C	FT	Q				TP-04	
											LT	J					
											PI	2A					
											STC	Q					

Valve Tag	P&ID	P&ID Coor.	Safety Class	Cat.	Size	Valve Type	Act. Type	Active / Passive	Normal Position	Safety Position	Test Type	Test Freq.	Alt. Freq.	Relief Request	Deferred Just.	Tech. Pos.	Notes
Valve Name	**CTMT VACUUM PUMP SUCTION CTMT PENETRATION (36-OUTSIDE)**																
3CVS*CTV21B	26953-1	E-5	2	A	2.0	DI	AO	A	C	C	FT	Q				TP-04	
											LT	J					
											PI	2A					
											STC	Q					
Valve Name	**CTMT VACUUM PUMP DISCHARGE CTMT PENETRATION (121-INSIDE)**																
3CVS*MOV25	26953-1	G-4	2	A	2.0	GT	MO	P	C	C	LJ	J					
											PI	2A					
Valve Name	**CTMT VACUUM PUMP DISCHARGE CTMT PENETRATION (121-OUTSIDE)**																
3CVS*V013	26953-1	F-4	2	A	2.0	DI	HA	P	LC	C	LJ	J					
Valve Name	**CTMT VACUUM AIR EJECTOR ISOLATION (CTMT PENETRATION 37-OUTSIDE)**																
3CVS*V020	26953-1	F-2	2	A	8.0	BF	HA	P	LC	C	LJ	J					
Valve Name	**CTMT DRAINS SUMP PUMP DISCHARGE CTMT PENETRATION (28-INSIDE)**																
3DAS*CTV24	26906-3	I-10	2	A	2.0	GL	AO	A	C	C	FT	Q				TP-04	
											LJ	J					
											PI	2A					
											STC	Q					

Valve Tag	P&ID	P&ID Coor.	Safety Class	Cat.	Size	Valve Type	Act. Type	Active / Passive	Normal Position	Safety Position	Test Type	Test Freq.	Alt. Freq.	Relief Request	Deferred Just.	Tech. Pos.	Notes
Valve Name	**CTMT DRAINS SUMP PMP DISCHG CTMT PENT. (28-OUTSIDE)**																
3DAS*CTV25	26906-3	J-10	2	A	2.0	GL	AO	A	O	C	FT	Q				TP-04	
											LJ	J					
											PI	2A					
											STC	Q					
Valve Name	**REACTOR PLANT AERATED VENTS CONTAINMENT PENETRATION (28-OUTSIDE)**																
3DAS*RV87	26906-3	J-10	2	AC	2.0	RV	SA	A	C	O/C	LJ	J					
											SRV	10A					
Valve Name	**PRT & CTMT DRAINS TRANSFER PP DSCHRG CTMT PENETRATION (27-INSIDE)**																
3DGS*CTV24	26907	G-10	2	A	3.0	GL	AO	A	C	C	FT	Q				TP-04	
											LJ	J					
											PI	2A					
											STC	Q					
Valve Name	**PRT & CTMT DRAINS TRNSFR PP DSCHRGE CTMT PENETRATION (27-OUTSIDE)**																
3DGS*CTV25	26907	E-10	2	A	3.0	GL	AO	A	O	C	FT	Q				TP-04	
											LJ	J					
											PI	2A					
											STC	Q					

Valve Tag	P&ID	P&ID Coor.	Safety Class	Cat.	Size	Valve Type	Act. Type	Active / Passive	Normal Position	Safety Position	Test Type	Test Freq.	Alt. Freq.	Relief Request	Deferred Just.	Tech. Pos.	Notes
Valve Name	CONTAINMENT PENETRATION #27																
3DGS*RV51	26907	F-10	2	AC	0.75	RV	SA	A	C	O/C	LJ	J					
											SRV	10A					
Valve Name	CTMT ISOL 'A' S/G STEAM HDR DRAIN #1 S/G																
3DTM*AOV29A	26945-1	A-2	2	B	3.0	GL	AO	A	O	C	FT	Q				TP-04	
											PI	2A					
											STC	Q					
Valve Name	CTMT ISOL 'A' STEAM GENERATOR STEAM HEADER DRAIN '2' S/GENERATOR																
3DTM*AOV29B	26945-1	D-2	2	B	3.0	GL	AO	A	O	C	FT	Q				TP-04	
											PI	2A					
											STC	Q					
Valve Name	CTMT ISOL 'A' STEAM GENERATOR STEAM HEADER DRAIN '3' S/GENERATOR																
3DTM*AOV29C	26945-1	F-2	2	B	3.0	GL	AO	A	O	C	FT	Q				TP-04	
											PI	2A					
											STC	Q					
Valve Name	CTMT ISOL 'A' STEAM GENERATOR STEAM HEADER DRAIN '4' S/GENERATOR																
3DTM*AOV29D	26945-1	H-2	2	B	3.0	GL	AO	A	O	C	FT	Q				TP-04	
											PI	2A					
											STC	Q					

Valve Tag	P&ID	P&ID Coor.	Safety Class	Cat.	Size	Valve Type	Act. Type	Active / Passive	Normal Position	Safety Position	Test Type	Test Freq.	Alt. Freq.	Relief Request	Deferred Just.	Tech. Pos.	Notes
Valve Name	**CTMT ISOL 'B' S/G STEAM HDR DRN #1 S/G**																
3DTM*AOV61A	26945-1	A-3	2	B	3.0	GL	AO	A	O	C	FT	Q				TP-04	
											PI	2A					
											STC	Q					
Valve Name	**CTMT ISOL 'B' STEAM GENERATOR STEAM HEADER DRAIN '2' S/GENERATOR**																
3DTM*AOV61B	26945-1	D-3	2	B	3.0	GL	AO	A	O	C	FT	Q				TP-04	
											PI	2A					
											STC	Q					
Valve Name	**CTMT ISOL 'B' STEAM GENERATOR STEAM HEADER DRAIN '3' S/GENERATOR**																
3DTM*AOV61C	26945-1	F-3	2	B	3.0	GL	AO	A	O	C	FT	Q				TP-04	
											PI	2A					
											STC	Q					
Valve Name	**CTMT ISOL 'B' STEAM GENERATOR STEAM HEADER DRAIN '4' S/GENERATOR**																
3DTM*AOV61D	26945-1	H-3	2	B	3.0	GL	AO	A	O	C	FT	Q				TP-04	
											PI	2A					
											STC	Q					

Valve Tag	P&ID	P&ID Coor.	Safety Class	Cat.	Size	Valve Type	Act. Type	Active / Passive	Normal Position	Safety Position	Test Type	Test Freq.	Alt. Freq.	Relief Request	Deferred Just.	Tech. Pos.	Notes
Valve Name	CTMT ISOLATION A S/G STEAM HEADER DRAIN 1 TT																
3DTM*AOV63A	26945-1	M-4	2	B	1.0	GL	AO	A	O	C	FT	Q				TP-04	
											PI	2A					
											STC	Q					
Valve Name	CONTAINMENT ISOLATION A STEAM GENERATOR STEAM HEADER DRAIN 2 TT																
3DTM*AOV63B	26945-1	J-4	2	B	1.0	GL	AO	A	O	C	FT	Q				TP-04	
											PI	2A					
											STC	Q					
Valve Name	CONTAINMENT ISOLATION A STEAM GENERATOR STEAM HEADER DRAIN 4 TT																
3DTM*AOV63D	26945-1	K-4	2	B	1.0	GL	AO	A	O	C	FT	Q				TP-04	
											PI	2A					
											STC	Q					
Valve Name	CONTAINMENT ISOLATION B STEAM GENERATOR STEAM HEADER DRAIN 1 TT																
3DTM*AOV64A	26945-1	M-5	2	B	1.0	GL	AO	A	O	C	FT	Q				TP-04	
											PI	2A					
											STC	Q					

Valve Tag	P&ID	P&ID Coor.	Safety Class	Cat.	Size	Valve Type	Act. Type	Active / Passive	Normal Position	Safety Position	Test Type	Test Freq.	Alt. Freq.	Relief Request	Deferred Just.	Tech. Pos.	Notes
Valve Name	**CTMT ISOLATION B S/G STEAM HEADER DRAIN 2 TT**																
3DTM*AOV64B	26945-1	J-5	2	B	1.0	GL	AO	A	O	C	FT	Q				TP-04	
											PI	2A					
											STC	Q					
Valve Name	**CONTAINMENT ISOLATION B STEAM GENERATOR STEAM HEADER DRAIN 4 TT**																
3DTM*AOV64D	26945-1	K-5	2	B	1.0	GL	AO	A	O	C	FT	Q				TP-04	
											PI	2A					
											STC	Q					
Valve Name	**COMP INST EXCESS AIR**																
3EGA*EFV35A1	26916-2	H-6	3	AC	0.25	CH	SA	A	O	C	FSC	Q	CM			CM-29	
											FSO	Q	CM			CM-29	
											LT	2A					
Valve Name	**CIRCLE SEAL CONTROL VALVE FLOW LIMITER WITH BY-PASS**																
3EGA*EFV35A2	26916-2	H-9	3	AC	0.25	CH	SA	A	O	C	FSC	Q	CM			CM-29	
											FSO	Q	CM			CM-29	
											LT	2A					

Valve Tag	P&ID	P&ID Coor.	Safety Class	Cat.	Size	Valve Type	Act. Type	Active / Passive	Normal Position	Safety Position	Test Type	Test Freq.	Alt. Freq.	Relief Request	Deferred Just.	Tech. Pos.	Notes
Valve Name	**COMP INST EXCESS AIR**																
3EGA*EFV35B1	26916-4	H-6	3	AC	0.25	CH	SA	A	O	C	FSC	Q	CM			CM-29	
											FSO	Q	CM			CM-29	
											LT	2A					
Valve Name	**COMP INST EXCESS AIR**																
3EGA*EFV35B2	26916-4	H-9	3	AC	0.25	CH	SA	A	O	C	FSC	Q	CM			CM-29	
											FSO	Q	CM			CM-29	
											LT	2A					
Valve Name	**"A" DIESEL START AIR RECEIVER TANK 1A RELIEF**																
3EGA*RV24A1	26916-2	J-6	3	C	0.5	RV	SA	A	C	O/C	SRV	10A					
Valve Name	**"A" DIESEL START AIR RECEIVER TANK 2A RELIEF**																
3EGA*RV24A2	26916-2	J-8	3	C	0.5	RV	SA	A	C	O/C	SRV	10A					
Valve Name	**"B" DIESEL START AIR RECEIVER TANK 1B RELIEF**																
3EGA*RV24B1	26916-4	J-6	3	C	0.5	RV	SA	A	C	O/C	SRV	10A					
Valve Name	**"B" DIESEL START AIR RECEIVER TANK 2B RELIEF**																
3EGA*RV24B2	26916-4	J-8	3	C	0.5	RV	SA	A	C	O/C	SRV	10A					
Valve Name	**"A" DIESEL START AIR SHUTDOWN SOLENOID**																
3EGA*SOV25A	26916-2	J-3	3	N/A	0.375	GL	SO	N/A	C	C	FSC	Q	NO			TP-06	
											FT	Q				TP-04	

Valve Tag	P&ID	P&ID Coor.	Safety Class	Cat.	Size	Valve Type	Act. Type	Active / Passive	Normal Position	Safety Position	Test Type	Test Freq.	Alt. Freq.	Relief Request	Deferred Just.	Tech. Pos.	Notes
Valve Name	"B" DIESEL START AIR SHUTDOWN SOLENOID																
3EGA*SOV25B	26916-4	J-3	3	N/A	0.375	GL	SO	N/A	C	C	FSC	Q	NO			TP-06	
											FT	Q				TP-04	
Valve Name	"A" DIESEL START AIR START SOLENOID HEADER 2A																
3EGA*SOV26A	26916-2	M-2	4	N/A	0.375	GL-3W	SO	N/A	C	O	FSO	Q	NO			TP-06	
Valve Name	"B" DIESEL START AIR START SOLENOID HEADER 2B																
3EGA*SOV26B	26916-4	M-2	4	N/A	0.375	GL-3W	SO	N/A	C	O	FSO	Q	NO			TP-06	
Valve Name	"A" DIESEL START AIR START SOLENOID HEADER 1A																
3EGA*SOV27A	26916-2	M-3	4	N/A	0.375	GL-3W	SO	N/A	C	O	FSO	Q	NO			TP-06	
Valve Name	'B' DIESEL START AIR START SOLENOID HEADER 1B																
3EGA*SOV27B	26916-4	M-3	4	N/A	0.375	GL-3W	SO	N/A	C	O	FSO	Q	NO			TP-06	
Valve Name	AIR COMPRESSOR 1A DISCHARGE CHECK VALVE																
3EGA*V004	26916-2	H-3	3	AC	0.75	CN	SA	A	SYS	C	FSC	Q	CM			CM-66	
											FSO	Q	CM			CM-66	
											LT	2A					
Valve Name	COMPRESSOR 2A DISCHARGE CHECK VALVE																
3EGA*V011	26916-2	H-8	3	AC	0.75	CN	SA	A	SYS	C	FSC	Q	CM			CM-66	
											FSO	Q	CM			CM-66	
											LT	2A					

Valve Tag	P&ID	P&ID Coor.	Safety Class	Cat.	Size	Valve Type	Act. Type	Active / Passive	Normal Position	Safety Position	Test Type	Test Freq.	Alt. Freq.	Relief Request	Deferred Just.	Tech. Pos.	Notes
Valve Name	**AIR COMPRESSOR 1B DISCHARGE CHECK VALVE**																
3EGA*V030	26916-4	H-3	3	AC	0.75	CN	SA	A	SYS	C	FSC	Q	CM			CM-66	
											FSO	Q	CM			CM-66	
											LT	2A					
Valve Name	**AIR COMPRESSOR 2B DISCHARGE CHECK VALVE**																
3EGA*V037	26916-4	H-8	3	AC	0.75	CN	SA	A	SYS	C	FSC	Q	CM			CM-66	
											FSO	Q	CM			CM-66	
											LT	2A					
Valve Name	**"A" DIESEL FUEL OIL TRANSFER PUMP DISCHARGE STR1A OUTLET CHECK**																
3EGF*V001	26917-1	C-2	3	C	1.5	CL	SA	A	SYS	O/C	FSC	Q	NO			TP-06	
											FSO	Q	NO			TP-06	
Valve Name	**"A" DIESEL FUEL OIL TRANSFER PUMP DISCHARGE STR1C OUTLET CHECK**																
3EGF*V003	26917-1	D-2	3	C	1.5	CL	SA	A	SYS	O/C	FSC	Q	NO			TP-06	
											FSO	Q	NO			TP-06	
Valve Name	**"B" DIESEL FUEL OIL TRANSFER PUMP DISCHARGE STR1B OUTLET CHECK**																
3EGF*V007	26917-1	C-6	3	C	1.5	CL	SA	A	SYS	O/C	FSC	Q	NO			TP-06	
											FSO	Q	NO			TP-06	

Valve Tag	P&ID	P&ID Coor.	Safety Class	Cat.	Size	Valve Type	Act. Type	Active / Passive	Normal Position	Safety Position	Test Type	Test Freq.	Alt. Freq.	Relief Request	Deferred Just.	Tech. Pos.	Notes
Valve Name	**"B" DIESEL FUEL OIL TRANSFER PUMP DISCHARGE STR1D OUTLET CHECK**																
3EGF*V009	26917-1	D-6	3	C	1.5	CL	SA	A	SYS	O/C	FSC	Q	NO			TP-06	
											FSO	Q	NO			TP-06	
Valve Name	**'A' DIESEL DC MOTOR DRIVEN FUEL OIL PUMP P2A DISCHARGE CHECK**																
3EGF*V960	26917-1	I-5	3	C	1.5	CS	SA	A	SYS	O/C	FSC	Q	NO			TP-06	
											FSO	Q	NO			TP-06	
Valve Name	**'B' DIESEL DC MOTOR DRIVEN FUEL OIL PUMP P2B DISCHARGE CHECK**																
3EGF*V966	26917-1	I-9	3	C	1.5	CS	SA	A	SYS	O/C	FSC	Q	NO			TP-06	
											FSO	Q	NO			TP-06	
Valve Name	**CHECK VALVE**																
3EGS*V993A	26916-1	E-7	3	N/A	6.0	CD	SA	N/A	SYS	O	FSC	Q	NO			TP-06	
											FSO	Q	NO			TP-06	
Valve Name	**CHECK VALVE**																
3EGS*V993B	26916-3	E-7	3	N/A	6.0	CD	SA	N/A	SYS	O	FSC	Q	NO			TP-06	
											FSO	Q	NO			TP-06	

Valve Tag	P&ID	P&ID Coor.	Safety Class	Cat.	Size	Valve Type	Act. Type	Active / Passive	Normal Position	Safety Position	Test Type	Test Freq.	Alt. Freq.	Relief Request	Deferred Just.	Tech. Pos.	Notes
Valve Name	**FIRE PROTECTION CTMT PENETRATION (56-OUTSIDE)**																
3FPW*CTV48	26946-2	B-4	2	A	6.0	BF	AO	A	O	C	FT	Q	CS		038	TP-04	
											LJ	J					
											PI	2A					
											STC	Q	CS		038		
Valve Name	**FIRE PROTECTION CTMT PENETRATION (56-INSIDE)**																
3FPW*CTV49	26946-2	C-4	2	A	6.0	BF	AO	A	O	C	FT	Q	CS		038	TP-04	
											LJ	J					
											PI	2A					
											STC	Q	CS		038		
Valve Name	**CONTAINMENT PENETRATION RELIEF VALVE (56-OUTSIDE) (WAS 3SIL*RV07)**																
3FPW*RV87	26946-2	B-2	2	AC	0.75	RV	SA	A	C	O/C	LJ	J					
											SRV	10A					
Valve Name	**CTMT INNER ISOLATION VALVE 3FPW*CTV49 BYPASS (56-INSIDE)**																
3FPW*V661	26946-2	C-4	2	A	6.0	GL	HA	P	LC	C	LJ	J					
Valve Name	**CONTAINMENT OUTER ISOLATION VALVE CTV48 BYPASS (56-OUTSIDE)**																
3FPW*V666	26946-2	B-4	2	A	6.0	GL	HA	P	LC	C	LJ	J					

Valve Tag	P&ID	P&ID Coor.	Safety Class	Cat.	Size	Valve Type	Act. Type	Active / Passive	Normal Position	Safety Position	Test Type	Test Freq.	Alt. Freq.	Relief Request	Deferred Just.	Tech. Pos.	Notes
Valve Name	STEAM GENERATOR AUXILIARY FEEDWATER ALTERNATE VALVE SUCTION																
3FWA*AOV23A	26930-2	E-6	3	B	8.0	BF	AO	A	C	C	FT	Q				TP-04	
											PI	2A					
											STC	Q					
Valve Name	AUXILIARY FEED SG AUXILIARY FEEDWATER ALTERNATE SUCTION VALVE																
3FWA*AOV23B	26930-2	B-9	3	B	8.0	BF	AO	A	C	C	FT	Q				TP-04	
											PI	2A					
											STC	Q					
Valve Name	DEMINERALIZER WATER STORAGE TANK HEATING CIRCULATING LINE ISOL																
3FWA*AOV25	26930-2	D-3	3	B	3.0	GL	AO	A	O	C	FT	Q				TP-04	
											PI	2A					
											STC	Q					
Valve Name	DEMINERALIZER WATER STORAGE TANK HEATING CIRCULATING LINE ISOL																
3FWA*AOV26	26930-2	D-4	3	B	3.0	GL	AO	A	O	C	FT	Q				TP-04	
											PI	2A					
											STC	Q					

Valve Tag	P&ID	P&ID Coor.	Safety Class	Cat.	Size	Valve Type	Act. Type	Active / Passive	Normal Position	Safety Position	Test Type	Test Freq.	Alt. Freq.	Relief Request	Deferred Just.	Tech. Pos.	Notes
Valve Name	STEAM GENERATOR AUXILIARY FEEDWATER PUMP A SUCTION ISOLATION VLV																
3FWA*AOV61A	26930-2	E-4	3	B	8.0	BF	AO	A	O	O	FT	Q				TP-04	
											PI	2A					
											STC	Q					
Valve Name	DEMIN WATER STORAGE TANK TO P1A/P1B ISOLATION VALVES																
3FWA*AOV61B	26930-2	B-7	3	B	8.0	BF	AO	A	O	O	FT	Q				TP-04	
											PI	2A					
											STC	Q					
Valve Name	3FWA*P1A/3FWA*P1B CROSS CONNECT VALVE																
3FWA*AOV62A	26930-2	H-6	3	B	6.0	GL	AO	A	C	C	FT	Q				TP-04	
											PI	2A					
											STC	Q					
Valve Name	3FWA*P1A/3FWA*P1B CROSS CONNECT VALVE																
3FWA*AOV62B	26930-2	G-7	3	B	6.0	GL	AO	A	C	C	FT	Q				TP-04	
											PI	2A					
											STC	Q					
Valve Name	TURBINE DRIVEN AUXILIARY FEEDWATER ALTERNATE SUCTION (3FWA*V061)																
3FWA*HCV37	26930-2	A-10	3	B	10.0	BF	HA	A	C	C	FSC	2A					

Valve Tag	P&ID	P&ID Coor.	Safety Class	Cat.	Size	Valve Type	Act. Type	Active / Passive	Normal Position	Safety Position	Test Type	Test Freq.	Alt. Freq.	Relief Request	Deferred Just.	Tech. Pos.	Notes
Valve Name	AUXILIARY FEEDWATER CONTROL VALVE																
3FWA*HV31A	26930-2	J-5	3	B	3.0	GL	SO	A	O	O/C	FT	Q				TP-04	
											PI	2A					
											STC	Q					
Valve Name	AUXILIARY FEEDWATER CONTROL VALVE																
3FWA*HV31B	26930-2	J-7	3	B	3.0	GL	SO	A	O	O/C	FT	Q				TP-04	
											PI	2A					
											STC	Q					
Valve Name	AUXILIARY FEEDWATER CONTROL VALVE																
3FWA*HV31C	26930-2	I-9	3	B	3.0	GL	SO	A	O	O/C	FT	Q				TP-04	
											PI	2A					
											STC	Q					
Valve Name	AUXILIARY FEEDWATER CONTROL VALVE																
3FWA*HV31D	26930-2	J-2	3	B	3.0	GL	SO	A	O	O/C	FT	Q				TP-04	
											PI	2A					
											STC	Q					

Valve Tag	P&ID	P&ID Coor.	Safety Class	Cat.	Size	Valve Type	Act. Type	Active / Passive	Normal Position	Safety Position	Test Type	Test Freq.	Alt. Freq.	Relief Request	Deferred Just.	Tech. Pos.	Notes
Valve Name	TURBINE DRIVEN AUXILIARY FEEDWATER CONTROL VALVE																
3FWA*HV32A	26930-2	J-6	3	B	3.0	GL	SO	A	O	O/C	FT	Q				TP-04	
											PI	2A					
											STC	Q					
Valve Name	TURBINE DRIVEN AUXILIARY FEEDWATER CONTROL VALVE																
3FWA*HV32B	26930-2	J-8	3	B	3.0	GL	SO	A	O	O/C	FT	Q				TP-04	
											PI	2A					
											STC	Q					
Valve Name	TURBINE DRIVEN AUXILIARY FEEDWATER CONTROL VALVE																
3FWA*HV32C	26930-2	I-10	3	B	3.0	GL	SO	A	O	O/C	FT	Q				TP-04	
											PI	2A					
											STC	Q					
Valve Name	TURBINE DRIVEN AUXILIARY FEEDWATER CONTROL VALVE																
3FWA*HV32D	26930-2	J-3	3	B	3.0	GL	SO	A	O	O/C	FT	Q				TP-04	
											PI	2A					
											STC	Q					

Valve Tag	P&ID	P&ID Coor.	Safety Class	Cat.	Size	Valve Type	Act. Type	Active / Passive	Normal Position	Safety Position	Test Type	Test Freq.	Alt. Freq.	Relief Request	Deferred Just.	Tech. Pos.	Notes
Valve Name	TURBINE DRIVEN AUXILIARY FEEDWATER CONTROL VALVE																
3FWA*HV36A	26930-2	L-5	2	B	3.0	GL	SO	A	O	O/C	FT	Q	CS		010	TP-04	
											PI	2A					
											STC	Q	CS		010		
											STO	Q	CS		010		
Valve Name	TURBINE DRIVEN AUXILIARY FEEDWATER CONTROL VALVE																
3FWA*HV36B	26930-2	L-8	2	B	3.0	GL	SO	A	O	O/C	FT	Q	CS		010	TP-04	
											PI	2A					
											STC	Q	CS		010		
											STO	Q	CS		010		
Valve Name	TURBINE DRIVEN AUXILIARY FEEDWATER CONTROL VALVE																
3FWA*HV36C	26930-2	J-10	2	B	3.0	GL	SO	A	O	O/C	FT	Q	CS		010	TP-04	
											PI	2A					
											STC	Q	CS		010		
											STO	Q	CS		010		
Valve Name	TURBINE DRIVEN AUXILIARY FEEDWATER CONTROL VALVE																
3FWA*HV36D	26930-2	K-3	2	B	3.0	GL	SO	A	O	O/C	FT	Q	CS		010	TP-04	
											PI	2A					
											STC	Q	CS		010		
											STO	Q	CS		010		

Valve Tag	P&ID	P&ID Coor.	Safety Class	Cat.	Size	Valve Type	Act. Type	Active / Passive	Normal Position	Safety Position	Test Type	Test Freq.	Alt. Freq.	Relief Request	Deferred Just.	Tech. Pos.	Notes
Valve Name	**STEAM GENERATOR AUXILIARY FEEDWATER SYSTEM**																
3FWA*MOV35A	26930-2	L-5	2	B	4.0	GT	MO	A	O	O/C	PI	2A					
											STC	Q					
Valve Name	**STEAM GENERATOR AUXILIARY FEEDWATER ISOLATION**																
3FWA*MOV35B	26930-2	L-8	2	B	4.0	GT	MO	A	O	O/C	PI	2A					
											STC	Q					
Valve Name	**STEAM GENERATOR FEEDWATER ISOLATION**																
3FWA*MOV35C	26930-2	J-9	2	B	4.0	GT	MO	A	O	O/C	PI	2A					
											STC	Q					
Valve Name	**STEAM GENERATOR AUXILIARY FEEDWATER ISOLATION**																
3FWA*MOV35D	26930-2	K-2	2	B	4.0	GT	MO	A	O	O/C	PI	2A					
											STC	Q					
Valve Name	**TURBINE AUXILIARY FEEDWATER PUMP DISCHARGE RELIEF**																
3FWA*RV45	26930-2	E-10	3	C	2.0	RV	SA	A	C	O	SRV	10A					
Valve Name	**AUXILIARY FEEDWATER 3FWA*P1A SUCTION LINE RELIEF**																
3FWA*RV64A	26930-2	F-5	3	C	1.5	RV	SA	A	C	O/C	SRV	10A					
Valve Name	**AUXILIARY FEEDWATER 3FWA*P1B SUCTION LINE RELIEF**																
3FWA*RV64B	26930-2	C-9	3	C	1.5	RV	SA	A	C	O/C	SRV	10A					

Valve Tag	P&ID	P&ID Coor.	Safety Class	Cat.	Size	Valve Type	Act. Type	Active / Passive	Normal Position	Safety Position	Test Type	Test Freq.	Alt. Freq.	Relief Request	Deferred Just.	Tech. Pos.	Notes
Valve Name	AUXILIARY FEEDWATER 3FWA*P2 SUCTION LINE RELIEF																
3FWA*RV65	26930-2	B-10	3	C	1.5	RV	SA	A	C	O/C	SRV	10A					
Valve Name	"A" MOTOR DRIVEN AUX FEED PUMP DWST SUCTION HEADER ISOLATION																
3FWA*V002	26930-2	E-5	3	B	8.0	GT	HA	A	LO	O/C	FSC	2A					
Valve Name	"A" MDAFP DISCH CHECK VALVE																
3FWA*V003	26930-2	H-5	3	C	6.0	CT	SA	A	SYS	O/C	FSC	Q	CM			CM-34	
											FSO	Q	CM			CM-34	
Valve Name	MDAFP SPLY TO "A" S/C CHECK VALVE																
3FWA*V007	26930-2	K-5	3	C	3.0	CT	SA	A	SYS	O	FSC	Q	CM			CM-35	
											FSO	Q	CM			CM-35	
Valve Name	STEAM GENERATOR "A" AUXILIARY FEEDWATER CHECK																
3FWA*V009	26930-2	M-5	2	C	4.0	CT	SA	A	SYS	O/C	FSC	Q	CM			CM-38	
											FSO	Q	CM			CM-38	
Valve Name	MDAFP TO "D" S/G AUX FEED SPLY HDR CHECK VALVE																
3FWA*V012	26930-2	K-2	3	C	3.0	CT	SA	A	SYS	O	FSC	Q	CM			CM-35	
											FSO	Q	CM			CM-35	
Valve Name	STEAM GENERATOR "D" AUXILIARY FEEDWATER CHECK																
3FWA*V014	26930-2	M-2	2	C	4.0	CT	SA	A	SYS	O/C	FSC	Q	CM			CM-38	
											FSO	Q	CM			CM-38	

Valve Tag	P&ID	P&ID Coor.	Safety Class	Cat.	Size	Valve Type	Act. Type	Active / Passive	Normal Position	Safety Position	Test Type	Test Freq.	Alt. Freq.	Relief Request	Deferred Just.	Tech. Pos.	Notes
Valve Name	**STEAM GENERATOR AUXILIARY FEEDWATER PUMP B DWST SUCTION HDR ISOL**																
3FWA*V016	26930-2	B-8	3	B	8.0	GT	HA	A	LO	O/C	FSC	2A					
Valve Name	**"B" MDAFP DISCH CHECK VALVE**																
3FWA*V017	26930-2	G-8	3	C	6.0	CT	SA	A	SYS	O/C	FSC	Q	CM			CM-34	
											FSO	Q	CM			CM-34	
Valve Name	**MDAFP SPLY TO "B" S/G CHECK VALVE**																
3FWA*V021	26930-2	J-7	3	C	3.0	CT	SA	A	SYS	O	FSC	Q	CM			CM-35	
											FSO	Q	CM			CM-35	
Valve Name	**STEAM GENERATOR "B" AUXILIARY FEEDWATER CHECK**																
3FWA*V023	26930-2	M-7	2	C	4.0	CT	SA	A	SYS	O/C	FSC	Q	CM			CM-38	
											FSO	Q	CM			CM-38	
Valve Name	**MDAFP SPLY TO "C" S/G CHECK VALVE**																
3FWA*V026	26930-2	I-9	3	C	3.0	CT	SA	A	SYS	O	FSC	Q	CM			CM-35	
											FSO	Q	CM			CM-35	
Valve Name	**STEAM GENEATOR "C" FEEDWATER CHECK VALVE**																
3FWA*V028	26930-2	K-9	2	C	4.0	CT	SA	A	SYS	O/C	FSC	Q	CM			CM-38	
											FSO	Q	CM			CM-38	
Valve Name	**TDAFP SUCT ISOL ON DWST**																
3FWA*V030	26930-2	B-10	3	B	10.0	GT	HA	A	LO	C	FSC	2A					

Valve Tag	P&ID	P&ID Coor.	Safety Class	Cat.	Size	Valve Type	Act. Type	Active / Passive	Normal Position	Safety Position	Test Type	Test Freq.	Alt. Freq.	Relief Request	Deferred Just.	Tech. Pos.	Notes
Valve Name	TURBINE DRIVEN FEED PUMP DISCHARGE CHECK VALVE																
3FWA*V031	26930-2	F-11	3	C	8.0	CT	SA	A	SYS	O/C	FSC	Q	CM			CM-02	
											FSO	Q	CM			CM-02	
Valve Name	TDAFP SPLY TO "C" S/G CHECK VALVE																
3FWA*V035	26930-2	I-11	3	C	3.0	CT	SA	A	SYS	O	FSC	Q	CM			CM-36	
											FSO	Q	CM			CM-36	
Valve Name	T.D.A.F.W.PMP CHECK VLV. TO SG2																
3FWA*V039	26930	J-8	3	C	3.0	CT	SA	A	SYS	O	FSC	Q	CM			CM-36	
											FSO	Q	CM			CM-36	
Valve Name	TERRY TURBINE DISCHARGE TO 'A' STEAM GENERATOR CHECK																
3FWA*V043	26930	K-6	3	C	3.0	CT	SA	A	SYS	O	FSC	Q	CM			CM-36	
											FSO	Q	CM			CM-36	
Valve Name	TDAFP SPLY TO "D" S/G CK VALVE																
3FWA*V047	26930	K-3	3	C	3.0	CT	SA	A	SYS	O	FSC	Q	CM			CM-36	
											FSO	Q	CM			CM-36	
Valve Name	AUX FD PUMP CST SPLY CHECK VALVE																
3FWA*V060	26930-2	A-11	3	C	10.0	CS	SA	A	SYS	C	FSC	Q	CM			CM-37	
											FSO	Q	CM			CM-37	

Valve Tag	P&ID	P&ID Coor.	Safety Class	Cat.	Size	Valve Type	Act. Type	Active / Passive	Normal Position	Safety Position	Test Type	Test Freq.	Alt. Freq.	Relief Request	Deferred Just.	Tech. Pos.	Notes
Valve Name	TDAFP ALT SUCT MAN ISOL ON CST																
3FWA*V062	26930-2	A-10	3	B	10.0	GT	HA	A	O	C	FSC	2A					
Valve Name	MOTOR DRIVEN AUXILIARY FEEDWATER PPB ALTERNATE SUCTION FROM CST																
3FWA*V064	26930-2	C-8	3	B	8.0	GT	HA	A	O	C	FSC	2A					
Valve Name	MOTOR DRIVEN AUXILIARY FEEDWATER PPA ALTERNATE SUCTION FROM CST																
3FWA*V066	26930-2	E-5	3	B	8.0	GT	HA	A	O	C	FSC	2A					
Valve Name	STEAM GENERATOR "A"AUXILIARY FEEDWATER CHECK																
3FWA*V882	26930-2	M-5	2	C	4.0	CT	SA	A	SYS	O/C	FSC	Q	CM			CM-33	
											FSO	Q	CM			CM-33	
Valve Name	STEAM GENERATOR "B" AUXILIARY FEEDWATER CHECK																
3FWA*V883	26930-2	M-7	2	C	4.0	CT	SA	A	SYS	O/C	FSC	Q	CM			CM-33	
											FSO	Q	CM			CM-33	
Valve Name	STEAM GENERATOR "C" AUXILIARY FEEDWATER CHECK VALVE																
3FWA*V884	26930-2	K-9	2	C	4.0	CT	SA	A	SYS	O/C	FSC	Q	CM			CM-33	
											FSO	Q	CM			CM-33	
Valve Name	STEAM GENERATOR "D" AUXILIARY FEEDWATER CHECK																
3FWA*V885	26930-2	M-2	2	C	4.0	CT	SA	A	SYS	O/C	FSC	Q	CM			CM-33	
											FSO	Q	CM			CM-33	

Valve Tag	P&ID	P&ID Coor.	Safety Class	Cat.	Size	Valve Type	Act. Type	Active / Passive	Normal Position	Safety Position	Test Type	Test Freq.	Alt. Freq.	Relief Request	Deferred Just.	Tech. Pos.	Notes
Valve Name	**STEAM GENERATOR FEEDWATER PUMP "A" DWST SUPPLY HEADER ISOLATION**																
3FWA*V997	26930-2	E-3	3	B	8.0	GT	HA	A	LO	C	FSC	2A					
Valve Name	**STEAM GENERATOR FEEDWATER PUMP "B" DWST SUPPLY HEADER ISOLATION**																
3FWA*V998	26930-2	E-3	3	B	8.0	GT	HA	A	LO	C	FSC	2A					
Valve Name	**TURBINE DRIVEN AUX FEED PUMP ISOLATION FROM DWST**																
3FWA*V999	26930-2	D-3	3	B	10.0	GT	HA	A	LO	C	FSC	2A					
Valve Name	**STEAM GENERATOR FEEDWATER STOP VALVE**																
3FWS*CTV41A	26930-3	F-4	2	B	18.0	GT	HO	A	O	C	FT	Q	CS		006	TP-04	
											PI	2A					
											STC	Q	CS		006		
Valve Name	**STEAM GENERATOR FEEDWATER STOP VALVE**																
3FWS*CTV41B	26930-3	F-9	2	B	18.0	GT	HO	A	O	C	FT	Q	CS		006	TP-04	
											PI	2A					
											STC	Q	CS		006		
Valve Name	**STEAM GENERATOR FEEDWATER STOP VALVE**																
3FWS*CTV41C	26930-4	F-4	2	B	18.0	GT	HO	A	O	C	FT	Q	CS		006	TP-04	
											PI	2A					
											STC	Q	CS		006		

Valve Tag	P&ID	P&ID Coor.	Safety Class	Cat.	Size	Valve Type	Act. Type	Active / Passive	Normal Position	Safety Position	Test Type	Test Freq.	Alt. Freq.	Relief Request	Deferred Just.	Tech. Pos.	Notes
Valve Name	STEAM GENERATOR FEEDWATER STOP VALVE																
3FWS*CTV41D	26930-4	F-9	2	B	18.0	GT	HO	A	O	C	FT	Q	CS		006	TP-04	
											PI	2A					
											STC	Q	CS		006		
Valve Name	STEAM GENERATOR "A" FEEDWATER FLOW CONTROL VALVE																
3FWS*FCV510	26930-3	D-4	2	B	16.0	GL	AO	A	O	C	FT	Q	CS		006	TP-04	
											PI	2A					
											STC	Q	CS		006		
Valve Name	STEAM GENERATOR 'B' FEEDWATER FLOW CONTROL VALVE																
3FWS*FCV520	26930-3	D-9	2	B	16.0	GL	AO	A	O	C	FT	Q	CS		006	TP-04	
											PI	2A					
											STC	Q	CS		006		
Valve Name	STEAM GENERATOR 'C' FEEDWATER FLOW CONTROL VALVE																
3FWS*FCV530	26930-4	D-4	2	B	16.0	GL	AO	A	O	C	FT	Q	CS		006	TP-04	
											PI	2A					
											STC	Q	CS		006		

Valve Tag	P&ID	P&ID Coor.	Safety Class	Cat.	Size	Valve Type	Act. Type	Active / Passive	Normal Position	Safety Position	Test Type	Test Freq.	Alt. Freq.	Relief Request	Deferred Just.	Tech. Pos.	Notes
Valve Name	**STEAM GENERATOR 'D' FEEDWATER FLOW CONTROL VALVE**																
3FWS*FCV540	26930-4	D-9	2	B	16.0	GL	AO	A	O	C	FT	Q	CS		006	TP-04	
											PI	2A					
											STC	Q	CS		006		
Valve Name	**STEAM GENERATOR 'A' FEEDWATER BYPASS LEVEL CONTROL VALVE**																
3FWS*LV550	26930-3	D-3	2	B	6.0	GL	AO	A	C	C	FT	Q				TP-04	
											PI	2A					
											STC	Q					
Valve Name	**STEAM GENERATOR 'B' FEEDWATER BYPASS LEVEL CONTROL VALVE**																
3FWS*LV560	26930-3	D-8	2	B	6.0	GL	AO	A	C	C	FT	Q				TP-04	
											PI	2A					
											STC	Q					
Valve Name	**STEAM GENERATOR 'C' FEEDWATER BYPASS LEVEL CONTROL VALVE**																
3FWS*LV570	26930-4	D-3	2	B	6.0	GL	AO	A	C	C	FT	Q				TP-04	
											PI	2A					
											STC	Q					

Valve Tag	P&ID	P&ID Coor.	Safety Class	Cat.	Size	Valve Type	Act. Type	Active / Passive	Normal Position	Safety Position	Test Type	Test Freq.	Alt. Freq.	Relief Request	Deferred Just.	Tech. Pos.	Notes
Valve Name	**STEAM GENERATOR 'D' FEEDWATER BYPASS LEVEL CONTROL VALVE**																
3FWS*LV580	26930-4	D-8	2	B	6.0	GL	AO	A	C	C	FT	Q				TP-04	
											PI	2A					
											STC	Q					
Valve Name	**STEAM GENERATOR 1D FEEDWATER CHECK VALVE**																
3FWS*V898	26930-4	H-9	2	C	20.0	CT	SA	A	SYS	C	FSC	Q	CM			CM-45	
											FSO	Q	CM			CM-45	
Valve Name	**CHECK VALVE**																
3FWS*V899	26930-4	H-4	2	C	20.0	CT	SA	A	SYS	C	FSC	Q	CM			CM-45	
											FSO	Q	CM			CM-45	
Valve Name	**CHECK VALVE**																
3FWS*V920	26930-3	H-9	2	C	20.0	CT	SA	A	SYS	C	FSC	Q	CM			CM-45	
											FSO	Q	CM			CM-45	
Valve Name	**CHECK VALVE**																
3FWS*V921	26930-3	H-4	2	C	20.0	CT	SA	A	SYS	C	FSC	Q	CM			CM-45	
											FSO	Q	CM			CM-45	

Valve Tag	P&ID	P&ID Coor.	Safety Class	Cat.	Size	Valve Type	Act. Type	Active / Passive	Normal Position	Safety Position	Test Type	Test Freq.	Alt. Freq.	Relief Request	Deferred Just.	Tech. Pos.	Notes
Valve Name	**N2 CONTAINMENT ISOLATION CTMT PENETRATION (124)**																
3GSN*CTV105	26939-2	D-10	2	A	1.0	GL	AO	A	O	C	FT	Q				TP-04	
											LJ	J					
											PI	2A					
											STC	Q					
Valve Name	**PRESSURIZER RELIEF TNK N2 SUPPLY ISOL CTMT PENETRATION (124)**																
3GSN*CV8033	26939-2	C-10	2	A	1.0	GL	AO	A	O	C	FT	Q				TP-04	
											LJ	J					
											PI	2A					
											STC	Q					
Valve Name	**INLET TO 3HCS*C1A**																
3HCS*V001	26915	A-8	2	C	2.0	CL	SA	A	SYS	O	FSC	Q	CM			CM-46	
											FSO	Q	CM			CM-46	
Valve Name	**DBA HYDROGEN RECOMBINER SUCTION CTMT PENETRATION (111-OUTSIDE)**																
3HCS*V002	26915	B-8	2	A	2.0	DI	HA	A	LC	O/C	FSC	2A					
											FSO	2A					
											LJ	J					

Valve Tag	P&ID	P&ID Coor.	Safety Class	Cat.	Size	Valve Type	Act. Type	Active / Passive	Normal Position	Safety Position	Test Type	Test Freq.	Alt. Freq.	Relief Request	Deferred Just.	Tech. Pos.	Notes
Valve Name	**DBA HYDROGEN RECOMBINER SUCTION CTMT PENETRATION (111-OUTSIDE)**																
3HCS*V003	26915	B-8	2	A	2.0	DI	HA	A	LC	O/C	FSC	2A					
											FSO	2A					
											LJ	J					
Valve Name	**RECOMBINER 1A SUPPLY VALVE**																
3HCS*V004	26915	B-8	2	B	2.0	DI	HA	A	C	O	FSO	2A					
Valve Name	**RECOMBINER 1A RETURN VALVE**																
3HCS*V005	26915	B-8	2	B	2.0	DI	HA	A	LC	O	FSO	2A					
Valve Name	**DBA HYDROGEN RECOMBINER DISCHARGE CTMT PENETRATION (113-OUTSIDE)**																
3HCS*V006	26915	A-8	2	A	2.0	DI	HA	A	LC	O/C	FSC	2A					
											FSO	2A					
											LJ	J					
Valve Name	**DBA HYDROGEN RECOMBINER DISCHARGE CTMT PENETRATION (113-INSIDE)**																
3HCS*V007	26915	A-8	2	AC	2.0	CL	SA	A	SYS	O/C	FSC	Q	CM			CM-46	
											FSO	Q	CM			CM-46	
											LJ	J					
Valve Name	**VCS060-X-2**																
3HCS*V008	26915	A-10	2	C	2.0	CL	SA	A	SYS	O	FSC	Q	CM			CM-46	
											FSO	Q	CM			CM-46	

Valve Tag	P&ID	P&ID Coor.	Safety Class	Cat.	Size	Valve Type	Act. Type	Active / Passive	Normal Position	Safety Position	Test Type	Test Freq.	Alt. Freq.	Relief Request	Deferred Just.	Tech. Pos.	Notes
Valve Name	DBA HYDROGEN RECOMBINER SUCTION CTMT PENETRATION (112-OUTSIDE)																
3HCS*V009	26915	B-10	2	A	2.0	DI	HA	A	LC	O/C	FSC	2A					
											FSO	2A					
											LJ	J					
Valve Name	DBA HYDROGEN RECOMBINER SUCTION CTMT PENETRATION (112-OUTSIDE)																
3HCS*V010	26915	B-10	2	A	2.0	DI	HA	A	LC	O/C	FSC	2A					
											FSO	2A					
											LJ	J					
Valve Name	RECOMBINER 1B SUPPLY VALVE																
3HCS*V011	26915	B-10	2	B	2.0	DI	HA	A	C	O	FSO	2A					
Valve Name	RECOMBINER 1B RETURN VALVE																
3HCS*V012	26915	B-11	2	B	2.0	DI	HA	A	LC	O	FSO	2A					
Valve Name	DBA HYDROGEN RECOMBINER DISCHARGE CTMT PENETRATION (114-OUTSIDE)																
3HCS*V013	26915	B-11	2	A	2.0	DI	HA	A	LC	O/C	FSC	2A					
											FSO	2A					
											LT	J					

Valve Tag	P&ID	P&ID Coor.	Safety Class	Cat.	Size	Valve Type	Act. Type	Active / Passive	Normal Position	Safety Position	Test Type	Test Freq.	Alt. Freq.	Relief Request	Deferred Just.	Tech. Pos.	Notes
Valve Name	**DBA HYDROGEN RECOMBINER DISCHARGE CTMT PENETRATION (114-INSIDE)**																
3HCS*V014	26915	A-11	2	AC	2.0	CL	SA	A	SYS	O/C	FSC	Q	CM			CM-46	
											FSO	Q	CM			CM-46	
											LJ	J					
Valve Name	**CONTROL ROOM VENTILATION OUT ISOLATION VALVE**																
3HVC*AOV20	26951	M-2	3	B	10.0	BF	AO	A	O	C	FT	Q				TP-04	
											PI	2A					
											STC	Q					
Valve Name	**CONTROL ROOM VENTILATION OUT ISOLATION VALVE**																
3HVC*AOV21	26951	M-3	3	B	10.0	BF	AO	A	O	C	FT	Q				TP-04	
											PI	2A					
											STC	Q					
Valve Name	**CONTROL ROOM VENTILATION OUT ISOLATION VALVE**																
3HVC*AOV22	26951	M-2	3	B	16.0	BF	AO	A	O	C	FT	Q				TP-04	
											PI	2A					
											STC	Q					

Valve Tag	P&ID	P&ID Coor.	Safety Class	Cat.	Size	Valve Type	Act. Type	Active / Passive	Normal Position	Safety Position	Test Type	Test Freq.	Alt. Freq.	Relief Request	Deferred Just.	Tech. Pos.	Notes
Valve Name	**CONTROL ROOM VENTILATION OUT ISOLATION VALVE**																
3HVC*AOV23	26951	M-3	3	B	16.0	BF	AO	A	O	C	FT	Q				TP-04	
											PI	2A					
											STC	Q					
Valve Name	**CONTROL ROOM VENTILATION INLET ISOLATION VALVE**																
3HVC*AOV25	26951	A-4	3	B	16.0	BF	AO	A	O	O/C	FS	2A					
											FT	Q				TP-04	
											PI	2A					
											STC	Q					
											STO	Q					
Valve Name	**CONTROL ROOM VENTILATION INLET ISOLATION VALVE**																
3HVC*AOV26	26951	B-5	3	B	16.0	BF	AO	A	O	O/C	FS	2A					
											FT	Q				TP-04	
											PI	2A					
											STC	Q					
											STO	Q					
Valve Name	**AIR STORAGE TANK RELIEF**																
3HVC*RV125A1	26951-1	F-3	3	C	0.75	RV	SA	A	C	O/C	SRV	10A					

Valve Tag	P&ID	P&ID Coor.	Safety Class	Cat.	Size	Valve Type	Act. Type	Active / Passive	Normal Position	Safety Position	Test Type	Test Freq.	Alt. Freq.	Relief Request	Deferred Just.	Tech. Pos.	Notes
Valve Name	**AIR STORAGE TANK RELIEF**																
3HVC*RV125A2	26951-1	F-4	3	C	0.75	RV	SA	A	C	O/C	SRV	10A					
Valve Name	**AIR STORAGE TANK RELIEF**																
3HVC*RV125B1	26951-1	F-3	3	C	0.75	RV	SA	A	C	O/C	SRV	10A					
Valve Name	**AIR STORAGE TANK RELIEF**																
3HVC*RV125B2	26951-1	E-4	3	C	0.75	RV	SA	A	C	O/C	SRV	10A					
Valve Name	**BANK A OUTLET VALVE**																
3HVC*SOV74A	26951	H-4	3	B	1.5	GL	SO	A	C	O	FT	Q				TP-04	
											PI	2A					
											STO	Q					
Valve Name	**BANK B OUTLET VALVE -- TARGET ROCK VALVE**																
3HVC*SOV74B	26951	H-3	3	B	1.5	GL	SO	A	C	O	FT	Q				TP-04	
											PI	2A					
											STO	Q					
Valve Name	**CHLL WTR SPLY & RTN DIFF PRS (TRAIN A) IND & CNTRL MOD VLV CNTRL**																
3HVK*PDV32A	26951-4	J-6	3	B	3.0	GL	SO	A	O	C	FT	Q	CS		034	TP-05	
Valve Name	**CHLL WTR SPLY & RTN DIFF PRS (TRAIN B) IND & CNTRL MOD VLV CNTRL**																
3HVK*PDV32B	26951-4	J-8	3	B	3.0	GL	SO	A	O	C	FT	Q	CS		034	TP-05	

Valve Tag	P&ID	P&ID Coor.	Safety Class	Cat.	Size	Valve Type	Act. Type	Active / Passive	Normal Position	Safety Position	Test Type	Test Freq.	Alt. Freq.	Relief Request	Deferred Just.	Tech. Pos.	Notes
Valve Name	3HVC*ACU2A CHILLED WATER RETURN TEMPERATURE CONTROL VALVE																
3HVK*TV39A	26951-5	M-3	3	B	3.0	GL	SO	A	O	O	FT	Q	CS		033	TP-05	
Valve Name	3HVC*ACU2B CHILLED WATER RETURN TEMPERATURE CONTROL VALVE																
3HVK*TV39B	26951-5	M-6	3	B	3.0	GL	SO	A	O	O	FT	Q	CS		033	TP-05	
Valve Name	3HVC-ACU1 CHILLED WATER COIL																
3HVK*TV41A	26951-5	J-3	3	B	3.0	GL	SO	A	O	O	FT	Q	CS		033	TP-05	
Valve Name	CONTROL ROOM AIR CONDITIONING UNIT 3HVC*ACU1B TEMP CONTROL																
3HVK*TV41B	26951-5	J-6	3	B	3.0	GL	SO	A	O	O	FT	Q	CS		033	TP-05	
Valve Name	SUPPLY ISOLATION																
3HVK*TV68A	26951-4	J-6	3	B	3.0	GL	SO	A	O/C	O/C	FT	Q				TP-04	
											PI	2A					
											STC	Q					
											STO	Q					
Valve Name	SUPPLY ISOLATION																
3HVK*TV68B	26951-4	J-9	3	B	3.0	GL	SO	A	O/C	O/C	FT	Q				TP-04	
											PI	2A					
											STC	Q					
											STO	Q					

Valve Tag	P&ID	P&ID Coor.	Safety Class	Cat.	Size	Valve Type	Act. Type	Active / Passive	Normal Position	Safety Position	Test Type	Test Freq.	Alt. Freq.	Relief Request	Deferred Just.	Tech. Pos.	Notes
Valve Name	**SUPPLY ISOLATION**																
3HVK*TV69A	26951-4	K-5	3	B	3.0	GL	SO	A	O/C	O/C	FT	Q				TP-04	
											PI	2A					
											STC	Q					
											STO	Q					
Valve Name	**SUPPLY ISOLATION**																
3HVK*TV69B	26951-4	K-9	3	B	3.0	GL	SO	A	O/C	O/C	FT	Q				TP-04	
											PI	2A					
											STC	Q					
											STO	Q					
Valve Name	**CHILLED WATER SUPPLY HEADER ISOLATION**																
3HVK*TV70A	26951-4	J-6	3	B	3.0	GL	SO	A	O/C	O/C	FT	Q				TP-04	
											PI	2A					
											STC	Q					
											STO	Q					
Valve Name	**SUPPLY ISOLATION**																
3HVK*TV70B	26951-4	J-8	3	B	3.0	GL	SO	A	O/C	O/C	FT	Q				TP-04	
											PI	2A					
											STC	Q					
											STO	Q					

Valve Tag	P&ID	P&ID Coor.	Safety Class	Cat.	Size	Valve Type	Act. Type	Active / Passive	Normal Position	Safety Position	Test Type	Test Freq.	Alt. Freq.	Relief Request	Deferred Just.	Tech. Pos.	Notes
Valve Name	**SUPPLY ISOLATION**																
3HVK*TV71A	26951-4	J-6	3	B	3.0	GL	SO	A	O/C	O/C	FT	Q				TP-04	
											PI	2A					
											STC	Q					
											STO	Q					
Valve Name	**SUPPLY ISOLATION**																
3HVK*TV71B	26951-4	J-8	3	B	3.0	GL	SO	A	O/C	O/C	FT	Q				TP-04	
											PI	2A					
											STC	Q					
											STO	Q					
Valve Name	**RETURN ISOLATION**																
3HVK*TV72A	26951-4	L-5	3	B	3.0	GL	SO	A	O/C	O/C	FT	Q				TP-04	
											PI	2A					
											STC	Q					
											STO	Q					
Valve Name	**RETURN ISOLATION**																
3HVK*TV72B	26951-4	L-9	3	B	3.0	GL	SO	A	O/C	O/C	FT	Q				TP-04	
											PI	2A					
											STC	Q					
											STO	Q					

Valve Tag	P&ID	P&ID Coor.	Safety Class	Cat.	Size	Valve Type	Act. Type	Active / Passive	Normal Position	Safety Position	Test Type	Test Freq.	Alt. Freq.	Relief Request	Deferred Just.	Tech. Pos.	Notes
Valve Name	**RETURN ISOLATION**																
3HVK*TV73A	26951-4	M-5	3	B	3.0	GL	SO	A	O/C	O/C	FT	Q				TP-04	
											PI	2A					
											STC	Q					
											STO	Q					
Valve Name	**RETURN ISOLATION**																
3HVK*TV73B	26951-4	M-9	3	B	3.0	GL	SO	A	O/C	O/C	FT	Q				TP-04	
											PI	2A					
											STC	Q					
											STO	Q					
Valve Name	**RETURN ISOLATION**																
3HVK*TV74A	26951-4	L-6	3	B	3.0	GL	SO	A	O/C	O/C	FT	Q				TP-04	
											PI	2A					
											STC	Q					
											STO	Q					
Valve Name	**RETURN ISOLATION**																
3HVK*TV74B	26951-4	L-8	3	B	3.0	GL	SO	A	O/C	O/C	FT	Q				TP-04	
											PI	2A					
											STC	Q					
											STO	Q					

Valve Tag	P&ID	P&ID Coor.	Safety Class	Cat.	Size	Valve Type	Act. Type	Active / Passive	Normal Position	Safety Position	Test Type	Test Freq.	Alt. Freq.	Relief Request	Deferred Just.	Tech. Pos.	Notes
Valve Name	RETURN ISOLATION																
3HVK*TV75A	26951-4	M-6	3	B	3.0	GL	SO	A	O/C	O/C	FT	Q				TP-04	
											PI	2A					
											STC	Q					
											STO	Q					
Valve Name	RETURN ISOLATION																
3HVK*TV75B	26951-4	M-8	3	B	3.0	GL	SO	A	O/C	O/C	FT	Q				TP-04	
											PI	2A					
											STC	Q					
											STO	Q					
Valve Name	ACU#4 CHILLED WATER TEMPERATURE CONTROL																
3HVK*TV76A	26951-5	D-4	3	B	3.0	GL	SO	A	O	O	FT	Q	CS		033	TP-05	
Valve Name	ACU#4 CHILLED WATER TEMPERATURE CONTROL																
3HVK*TV76B	26951-5	D-8	3	B	3.0	GL	SO	A	O	O	FT	Q	CS		033	TP-05	
Valve Name	ACU#3 CHILLED WATER TEMPERATURE CONTROL																
3HVK*TV77A	26951-5	G-4	3	B	3.0	GL	SO	A	O	O	FT	Q	CS		033	TP-05	
Valve Name	ACU#3 CHILLED WATER TEMPERATURE CONTROL																
3HVK*TV77B	26951-5	G-8	3	B	3.0	GL	SO	A	O	O	FT	Q	CS		033	TP-05	

Valve Tag	P&ID	P&ID Coor.	Safety Class	Cat.	Size	Valve Type	Act. Type	Active / Passive	Normal Position	Safety Position	Test Type	Test Freq.	Alt. Freq.	Relief Request	Deferred Just.	Tech. Pos.	Notes
Valve Name	CHECK VALVE																
3HVK*V001	26951-4	E-4	3	C	6.0	CS	SA	A	SYS	O	FSC	Q	CM			CM-22	
											FSO	Q	CM			CM-22	
Valve Name	CONTROL BUILDING CHILLED WATER CHECK VALVE																
3HVK*V037	26951-4	I-4	3	C	6.0	CS	SA	A	SYS	O	FSC	Q	CM			CM-22	
											FSO	Q	CM			CM-22	
Valve Name	CONTROL BUILDING CHILLED WATER CHECK VALVE																
3HVK*V039	26951-4	E-9	3	C	6.0	CS	SA	A	SYS	O	FSC	Q	CM			CM-22	
											FSO	Q	CM			CM-22	
Valve Name	CHECK VALVE																
3HVK*V075	26951-4	H-9	3	C	6.0	CS	SA	A	SYS	O	FSC	Q	CM			CM-22	
											FSO	Q	CM			CM-22	
Valve Name	OUTSIDE CONTAINMENT PURGE SUPPLY (86-OUTSIDE)																
3HVU*CTV32A	26953	F-9	2	A	42.0	BF	AO	A	LC	C	FT	Q	CS		007	TP-04	
											LJ	J					
											PI	2A					
											STC	Q	CS		007		

Valve Tag	P&ID	P&ID Coor.	Safety Class	Cat.	Size	Valve Type	Act. Type	Active / Passive	Normal Position	Safety Position	Test Type	Test Freq.	Alt. Freq.	Relief Request	Deferred Just.	Tech. Pos.	Notes
Valve Name	**OUTSIDE CONTAINMENT PURGE EXHAUST (85-OUTSIDE)**																
3HVU*CTV32B	26953	F-7	2	A	42.0	BF	AO	A	LC	C	FT	Q	CS		007	TP-04	
											LJ	J					
											PI	2A					
											STC	Q	CS		007		
Valve Name	**INSIDE CONTAINMENT PURGE SUPPLY (86-INSIDE)**																
3HVU*CTV33A	26953	H-9	2	A	42.0	BF	AO	A	LC	C	FT	Q	CS		007	TP-04	
											LJ	J					
											PI	2A					
											STC	Q	CS		007		
Valve Name	**INSIDE CONTAINMENT PURGE EXHAUST (85-INSIDE)**																
3HVU*CTV33B	26953	H-7	2	A	42.0	BF	AO	A	LC	C	FT	Q	CS		007	TP-04	
											LJ	J					
											PI	2A					
											STC	Q	CS		007		
Valve Name	**OUTSIDE CONTAINMENT PURGE SUPPLY (86-OUTSIDE)**																
3HVU*V005	26953	F-8	2	A	30.0	BF	HA	P	LC	C	LJ	J					

Valve Tag	P&ID	P&ID Coor.	Safety Class	Cat.	Size	Valve Type	Act. Type	Active / Passive	Normal Position	Safety Position	Test Type	Test Freq.	Alt. Freq.	Relief Request	Deferred Just.	Tech. Pos.	Notes
Valve Name	INSTRUMENT AIR CTMT PENETRATION (54-INSIDE)																
3IAS*MOV72	26938-3	G-5	2	A	2.0	GT	MO	A	O	C	LJ	J					
											PI	2A					
											STC	Q	CS		008		
Valve Name	INSTRUMENT AIR CTMT PENETRATION (54-OUTSIDE)																
3IAS*PV15	26938-3	F-5	2	A	1.5	GL	AO	A	O	C	FT	Q	CS		008	TP-04	
											LJ	J					
											PI	2A					
											STC	Q	CS		008		
Valve Name	PT937 CONTAINMENT ISOLATION																
3LMS*MOV40A	26954	F-6	2	B	1.5	GL	MO	P	O	O	PI	2A					
Valve Name	PT936 CONTAINMENT ISOLATION																
3LMS*MOV40B	26954	F-7	2	B	1.5	GL	MO	P	O	O	PI	2A					
Valve Name	PT935 CONTAINMENT ISOLATION																
3LMS*MOV40C	26954	F-8	2	B	1.5	GL	MO	P	O	O	PI	2A					
Valve Name	PT934 CONTAINMENT ISOLATION VALVE																
3LMS*MOV40D	26954	F-8	2	B	1.5	GL	MO	P	O	O	PI	2A					

Valve Tag	P&ID	P&ID Coor.	Safety Class	Cat.	Size	Valve Type	Act. Type	Active / Passive	Normal Position	Safety Position	Test Type	Test Freq.	Alt. Freq.	Relief Request	Deferred Just.	Tech. Pos.	Notes
Valve Name	**PRIMARY GRADE WATER TO PRT CTMT PENETRATION (15-OUTSIDE)**																
3PGS*CV8028	26919	N-1	2	A	3.0	GL	AO	A	O	C	FT	Q				TP-04	
											LJ	J					
											PI	2A					
											STC	Q					
Valve Name	**PRIMARY GRADE WATER TO PRT CTMT PENETRATION (15-INSIDE)**																
3PGS*CV8046	26919	L-1	2	A	3.0	GL	AO	A	O	C	FT	Q				TP-04	
											LJ	J					
											PI	2A					
											STC	Q					
Valve Name	**PRIMARY GRADE SYSTEM CONTAINMENT PENETRATION Z15 RELIEF**																
3PGS*RV77	26919	M-1	2	AC	0.75	RV	SA	A	C	O/C	LJ	J					
											SRV	10A					
Valve Name	**REFUEL WATER RECIRCULATING PUMP SUCTION ISOLATION**																
3QSS*AOV27	26915	G-4	2	B	12.0	BF	AO	A	O	C	FT	Q				TP-04	
											PI	2A					
											STC	Q					

Valve Tag	P&ID	P&ID Coor.	Safety Class	Cat.	Size	Valve Type	Act. Type	Active / Passive	Normal Position	Safety Position	Test Type	Test Freq.	Alt. Freq.	Relief Request	Deferred Just.	Tech. Pos.	Notes
Valve Name	**REFUEL WATER RECIRCULATING PUMP SUCTION ISOLATION**																
3QSS*AOV28	26915	G-4	2	B	12.0	BF	AO	A	O	C	FT	Q				TP-04	
											PI	2A					
											STC	Q					
Valve Name	**QUENCH SPRAY PUMP DISCHARGE CTMT PENETRATION (100-OUTSIDE)**																
3QSS*MOV34A	26915	K-6	2	A	12.0	BF	MO	A	C	O/C	LJ	J					
											PI	2A					
											STC	Q					
											STO	Q					
Valve Name	**QUENCH SPRAY PUMP DISCHARGE CTMT PENETRATION (101-OUTSIDE)**																
3QSS*MOV34B	26915	K-8	2	A	12.0	BF	MO	A	C	O/C	LJ	J					
											PI	2A					
											STC	Q					
											STO	Q					
Valve Name	**REFUELING WATER STORAGE TANK TO QUENCH SPRAY PUMP ISOLATION**																
3QSS*V001	26915	H-5	2	B	14.0	BF	HA	A	LO	O/C	FSC	2A					
Valve Name	**QUENCH SPRAY PUMP A SUCTION**																
3QSS*V002	26915	H-6	2	B	14.0	BF	HA	A	LO	O/C	FSC	2A					

Valve Tag	P&ID	P&ID Coor.	Safety Class	Cat.	Size	Valve Type	Act. Type	Active / Passive	Normal Position	Safety Position	Test Type	Test Freq.	Alt. Freq.	Relief Request	Deferred Just.	Tech. Pos.	Notes
Valve Name	QUENCH SPRAY PP DISCHARGE CTMT PENETRATION (100-INSIDE)																
3QSS*V004	26915	L-6	2	AC	12.0	CS	SA	A	SYS	O/C	FSC	Q	CM			CM-05	
											FSO	Q	CM			CM-05	
											LJ	J					
Valve Name	REFUEL WATER STORAGE TANK TO QUENCH SPRAY PUMP P3B ISOLATION																
3QSS*V005	26915	H-5	2	B	14.0	BF	HA	A	LO	O/C	FSC	2A					
Valve Name	QUENCH SPRAY PUMP B SUCTION																
3QSS*V006	26915	H-8	2	B	14.0	BF	HA	A	LO	O/C	FSC	2A					
Valve Name	QUENCH SPRAY PP DISCHARGE CTMT PENETRATION (101-INSIDE)																
3QSS*V008	26915	L-8	2	AC	12.0	CS	SA	A	SYS	O/C	FSC	Q	CM			CM-05	
											FSO	Q	CM			CM-05	
											LJ	J					
Valve Name	"B"QUENCH SPRAY HDR CHK.																
3QSS*V976	26915	L-8	2	AC	8.0	CH	SA	A	SYS	O	FSC	Q	CM			CM-06	
											FSO	Q	CM			CM-06	
Valve Name	"A" QUENCH SPRAY HDR. CHK																
3QSS*V977	26915	L-7	2	AC	8.0	CH	SA	A	SYS	O	FSC	Q	CM			CM-06	
											FSO	Q	CM			CM-06	

Valve Tag	P&ID	P&ID Coor.	Safety Class	Cat.	Size	Valve Type	Act. Type	Active / Passive	Normal Position	Safety Position	Test Type	Test Freq.	Alt. Freq.	Relief Request	Deferred Just.	Tech. Pos.	Notes
Valve Name	**"B" QUENCH SPRAY HDR. CHK.**																
3QSS*V978	26915	M-8	2	C	12.0	CS	SA	A	SYS	O	FSC	Q	CM			CM-06	
											FSO	Q	CM			CM-06	
Valve Name	**"A" QUENCH SPRAY HDR. CHK.**																
3QSS*V979	26915	M-7	2	C	12.0	CS	SA	A	SYS	O	FSC	Q	CM			CM-06	
											FSO	Q	CM			CM-06	
Valve Name	**REACTOR COOLANT LOOP 1 DRAIN ISOLATION**																
3RCS*AV8037A	26902-6	C-2	1	B	2.0	GL	AO	P	C	C	PI	2A					
Valve Name	**REACTOR COOLANT LOOP 2 DRAIN ISOLATION**																
3RCS*AV8037B	26902-6	C-3	1	B	2.0	GL	AO	P	C	C	PI	2A					
Valve Name	**REACTOR COOLANT LOOP 3 DRAIN ISOLATION**																
3RCS*AV8037C	26902-6	C-4	1	B	2.0	GL	AO	P	C	C	PI	2A					
Valve Name	**REACTOR COOLANT 4 DRAIN ISOLATION**																
3RCS*AV8037D	26902-6	C-5	1	B	2.0	GL	AO	P	C	C	PI	2A					
Valve Name	**PRESSURIZER AUXILIARY SPRAY(CVCS)**																
3RCS*AV8145	26902-3	L-2	1	B	2.0	GL	AO	P	C	C	PI	2A					

Valve Tag	P&ID	P&ID Coor.	Safety Class	Cat.	Size	Valve Type	Act. Type	Active / Passive	Normal Position	Safety Position	Test Type	Test Freq.	Alt. Freq.	Relief Request	Deferred Just.	Tech. Pos.	Notes
Valve Name	**REACTOR VESSEL 3RCS*RV1 VENT VALVE**																
3RCS*HCV442A	26902-6	J-6	2	B	1.0	GL	SO	A	C	O/C	FT	Q	CS		013	TP-04	
											PI	2A					
											STC	Q	CS		013		
											STO	Q	CS		013		
Valve Name	**B REACTOR HEAD VENT**																
3RCS*HCV442B	26902-6	K-6	2	B	1.0	GL	SO	A	C	O/C	FT	Q	CS		013	TP-04	
											PI	2A					
											STC	Q	CS		013		
											STO	Q	CS		013		
Valve Name	**RCP FILL & VENT LETDOWN ISOLATION**																
3RCS*LCV459	26902-2	B-11	1	B	3.0	GL	AO	A	O	C	FT	Q	CS		031	TP-04	
											PI	2A					
											STC	Q	CS		031		
Valve Name	**LETDOWN ISOLATION**																
3RCS*LCV460	26902-2	C-11	1	B	3.0	GL	AO	A	O	C	FT	Q	CS		031	TP-04	
											PI	2A					
											STC	Q	CS		031		

Valve Tag	P&ID	P&ID Coor.	Safety Class	Cat.	Size	Valve Type	Act. Type	Active / Passive	Normal Position	Safety Position	Test Type	Test Freq.	Alt. Freq.	Relief Request	Deferred Just.	Tech. Pos.	Notes
Valve Name	PRESSURIZER POWER RELIEF ISOLATION																
3RCS*MV8000A	26902-3	D-9	1	B	3.0	GT	MO	A	O	O/C	PI	2A					
											STC	Q					
											STO	Q					
Valve Name	PRESSURIZER POWER RELIEF ISOLATION																
3RCS*MV8000B	26902-3	D-6	1	B	3.0	GT	MO	A	O	O/C	PI	2A					
											STC	Q					
											STO	Q					
Valve Name	REACTOR VESSEL TO EXCESS LETDOWN																
3RCS*MV8098	26902	K-5	2	B	1.0	GT	MO	P	C	C	PI	2A					
Valve Name	PRESSURIZER PRESSURE RELIEF																
3RCS*PCV455A	26902-3	C-9	1	B	3.0	RV	SO	A	C	O	FT	Q	R		012	TP-04	
											LT	5A					
											PI	2A					
											STO	Q	R		012		

Valve Tag	P&ID	P&ID Coor.	Safety Class	Cat.	Size	Valve Type	Act. Type	Active / Passive	Normal Position	Safety Position	Test Type	Test Freq.	Alt. Freq.	Relief Request	Deferred Just.	Tech. Pos.	Notes
Valve Name	**PRESSURIZER PRESSURE RELIEF**																
3RCS*PCV456	26902-3	C-6	1	B	3.0	RV	SO	A	C	O	FT	Q	R		012	TP-04	
											LT	5A					
											PI	2A					
											STO	Q	R		012		
Valve Name	**PRESSURIZER SAFETY VALVE**																
3RCS*SV8010A	26902-3	E-2	1	C	6.0	RV	SA	A	C	O/C	SRV	5A					
Valve Name	**PRESSURIZER SAFETY VALVE**																
3RCS*SV8010B	26902-3	H-2	1	C	6.0	RV	SA	A	C	O/C	SRV	5A					
Valve Name	**PRESSURIZER SAFETY VALVE**																
3RCS*SV8010C	26902-3	J-2	1	C	6.0	RV	SA	A	C	O/C	SRV	5A					
Valve Name	**A REACTOR VESSEL HEAD VENT ISOLATION UPSTREAM**																
3RCS*SV8095A	26902-6	J-3	1	B	1.0	GL	SO	A	C	O/C	FT	Q	CS		013	TP-04	
											PI	2A					
											STC	Q	CS		013		
											STO	Q	CS		013		

Valve Tag	P&ID	P&ID Coor.	Safety Class	Cat.	Size	Valve Type	Act. Type	Active / Passive	Normal Position	Safety Position	Test Type	Test Freq.	Alt. Freq.	Relief Request	Deferred Just.	Tech. Pos.	Notes
Valve Name	**B REACTOR VESSEL HEAD VENT ISOLATION UPSTREAM**																
3RCS*SV8095B	26902-6	J-3	1	B	1.0	GL	SO	A	C	O/C	FT	Q	CS		013	TP-04	
											PI	2A					
											STC	Q	CS		013		
											STO	Q	CS		013		
Valve Name	**A REACTOR VESSEL HEAD VENT ISOLATION DOWNSTREAM**																
3RCS*SV8096A	26902-6	J-4	1	B	1.0	GL	SO	A	C	O/C	FT	Q	CS		013	TP-04	
											PI	2A					
											STC	Q	CS		013		
											STO	Q	CS		013		
Valve Name	**B REACTOR HEAD VENT ISOLATION DOWNSTREAM**																
3RCS*SV8096B	26902-6	J-4	1	B	1.0	GL	SO	A	C	O/C	FT	Q	CS		013	TP-04	
											PI	2A					
											STC	Q	CS		013		
											STO	Q	CS		013		
Valve Name	**SIH TO RCS LOOP 1 HOT LEG**																
3RCS*V026	26902-1	K-5	1	AC	6.0	CH	SA	A	SYS	O/C	FSC	Q	CM			CM-49	
											FSO	Q	CM			CM-49	
											LT	2A					

Valve Tag	P&ID	P&ID Coor.	Safety Class	Cat.	Size	Valve Type	Act. Type	Active / Passive	Normal Position	Safety Position	Test Type	Test Freq.	Alt. Freq.	Relief Request	Deferred Just.	Tech. Pos.	Notes
Valve Name	**SIH TO RCS LOOP 1,COLD LEG**																
3RCS*V029	26902-1	J-8	1	AC	1.5	CL	SA	A	C	O/C	FSC	Q	CM			CM-51	
											FSO	Q	CM			CM-51	
											LT	2A					
Valve Name	**SIL TO RCS LOOP 1 COLD LEG**																
3RCS*V030	26902-1	J-9	1	AC	10.0	CS	SA	A	C	O/C	FSC	Q	CM			CM-52	
											FSO	Q	CM			CM-52	
											LT	2A					
Valve Name	**CHARGING SYSTEM TO REACTOR COOLANT LOOP 1**																
3RCS*V031	26902	J-8	1	C	6.0	CS	SA	A	O	O/C	FSC	Q	CM			CM-53	
											FSO	Q	CM			CM-53	
Valve Name	**CHARGING SYSTEM TO REACTOR COOLANT LOOP 1**																
3RCS*V032	26902	J-8	1	C	6.0	CS	SA	A	O	O/C	FSC	Q	CM			CM-53	
											FSO	Q	CM			CM-53	
Valve Name	**RHS/SI TO RCS LOOP 2 HOT LEG**																
3RCS*V069	26902-4	J-3	1	AC	6.0	CS	SA	A	C	O/C	FSC	Q	CM			CM-49	
											FSO	Q	CM			CM-49	
											LT	2A					

Valve Tag	P&ID	P&ID Coor.	Safety Class	Cat.	Size	Valve Type	Act. Type	Active / Passive	Normal Position	Safety Position	Test Type	Test Freq.	Alt. Freq.	Relief Request	Deferred Just.	Tech. Pos.	Notes
Valve Name	**SIH TO RCS LOOP 2,COLD LEG**																
3RCS*V070	26902-4	J-10	1	AC	1.5	CL	SA	A	C	O/C	FSC	Q	CM			CM-51	
											FSO	Q	CM			CM-51	
											LT	2A					
Valve Name	**SIL TO RCS LOOP 2 COLD LEG**																
3RCS*V071	26902-4	I-10	1	AC	10.0	CS	SA	A	C	O/C	FSC	Q	CM			CM-52	
											FSO	Q	CM			CM-52	
											LT	2A					
Valve Name	**SIH TO RCS LOOP 2 HOT LEG**																
3RCS*V102	26902-2	B-4	1	AC	6.0	CS	SA	A	C	O/C	FSC	Q	CM			CM-49	
											FSO	Q	CM			CM-49	
											LT	2A					
Valve Name	**SIH TO RCS LOOP 3 COLD LEG**																
3RCS*V106	26902-2	B-9	1	AC	1.5	CL	SA	A	C	O/C	FSC	Q	CM			CM-51	
											FSO	Q	CM			CM-51	
											LT	2A					

Valve Tag	P&ID	P&ID Coor.	Safety Class	Cat.	Size	Valve Type	Act. Type	Active / Passive	Normal Position	Safety Position	Test Type	Test Freq.	Alt. Freq.	Relief Request	Deferred Just.	Tech. Pos.	Notes
Valve Name	**SIL TO RCS LOOP 3 COLD LEG**																
3RCS*V107	26902-2	B-9	1	AC	10.0	CS	SA	A	C	O/C	FSC	Q	CM			CM-52	
											FSO	Q	CM			CM-52	
											LT	2A					
Valve Name	**RHS/SI TO RCS LOOP 4 HOT LEG**																
3RCS*V142	26902-5	B-5	1	AC	6.0	CS	SA	A	C	O/C	FSC	Q	CM			CM-49	
											FSO	Q	CM			CM-49	
											LT	2A					
Valve Name	**SIH TO RCS LOOP 4,COLD LEG**																
3RCS*V145	26902-5	B-5	1	AC	1.5	CL	SA	A	C	O/C	FSC	Q	CM			CM-51	
											FSO	Q	CM			CM-51	
											LT	2A					
Valve Name	**SIL TO RCS LOOP 4 COLD LEG**																
3RCS*V146	26902	A-7	1	AC	10.0	CS	SA	A	C	O/C	FSC	Q	CM			CM-52	
											FSO	Q	CM			CM-52	
											LT	2A					
Valve Name	**CHARGING SYSTEM TO REACTOR COOLANT LOOP 4**																
3RCS*V147	26902-5	B-6	1	C	6.0	CS	SA	A	SYS	O/C	FSC	Q	CM			CM-53	
											FSO	Q	CM			CM-53	

Valve Tag	P&ID	P&ID Coor.	Safety Class	Cat.	Size	Valve Type	Act. Type	Active / Passive	Normal Position	Safety Position	Test Type	Test Freq.	Alt. Freq.	Relief Request	Deferred Just.	Tech. Pos.	Notes
Valve Name	CHARGING SYSTEM TO REACTOR COOLANTLOOP4																
3RCS*V148	26902-5	B-7	1	C	6.0	CS	SA	A	SYS	O/C	FSC	Q	CM			CM-53	
											FSO	Q	CM			CM-53	
Valve Name	RESIDUAL HEAT REMOVAL PUMP P1A MINIFLOW RECIRCULATION																
3RHS*FCV610	26912-1	F-5	2	B	2.0	GL	MO	A	O	O/C	PI	2A					
											STC	Q					
											STO	Q					
Valve Name	RHR PUMP P1B MINIFLOW RECIRCULATION																
3RHS*FCV611	26912	E-11	2	B	2.0	GL	MO	A	O	O/C	PI	2A					
											STC	Q					
											STO	Q					
Valve Name	RHS HX E1A BYP																
3RHS*FCV618	26912-1	E-7	2	B	8.0	BF	AO	A	O	O/C	FSC	2A					Manual Operator Test
											FT	Q				TP-04	
											STO	Q					
Valve Name	RHS HX E1B BYP																
3RHS*FCV619	26912-1	E-8	2	B	8.0	BF	AO	A	O	O/C	FSC	2A					Manual Operator Test
											FT	Q				TP-04	
											STO	Q					

Valve Tag	P&ID	P&ID Coor.	Safety Class	Cat.	Size	Valve Type	Act. Type	Active / Passive	Normal Position	Safety Position	Test Type	Test Freq.	Alt. Freq.	Relief Request	Deferred Just.	Tech. Pos.	Notes
Valve Name	**RES HX E1A FLOW CONT**																
3RHS*HCV606	26912-1	G-6	2	B	10.0	BF	AO	P	O	O	FT	Q				TP-04	
											STO	Q					
Valve Name	**RESIDUAL HEAT REMOVAL HEAT EXCHANGER E1B FLOW CONTROL**																
3RHS*HCV607	26912-1	F-10	2	B	10.0	BF	AO	P	O	O	FT	Q				TP-04	
											STO	Q					
Valve Name	**RHR PMP SUCTION FROM HOT LEGS CTMT PENETRATION (91-INSIDE)**																
3RHS*MV8701A	26912-1	C-3	1	A	12.0	GT	MO	A	LC	O/C	LJ	J					
											LT	CS/BI					
											PI	2A					
											STC	Q	CS		014		
											STO	Q	CS		014		
Valve Name	**RHR PUMP SUCTION FROM HOT LEGS CTMT PENETRATION (91-OUTSIDE)**																
3RHS*MV8701B	26912-1	C-4	2	A	12.0	GT	MO	A	LC	O/C	FSO	Q	CS		014		
											LJ	J					
											PI	2A					
											STC	Q	CS		014		
											STO	Q	CS		014		

Valve Tag	P&ID	P&ID Coor.	Safety Class	Cat.	Size	Valve Type	Act. Type	Active / Passive	Normal Position	Safety Position	Test Type	Test Freq.	Alt. Freq.	Relief Request	Deferred Just.	Tech. Pos.	Notes
Valve Name	**RESIDUAL HEAT REMOVAL INLET ISOLATION VALVE**																
3RHS*MV8701C	26912-1	G-2	1	A	12.0	GT	MO	A	LC	O/C	LT	CS/BI					
											PI	2A					
											STC	Q	CS		014		
											STO	Q	CS		014		
Valve Name	**RHR PMP SUCTION FROM HOT LEGS CTMT PENETRATION (92-OUTSIDE)**																
3RHS*MV8702A	26912-1	A-10	2	A	12.0	GT	MO	A	LC	O/C	FSO	Q	CS		014		
											LJ	J					
											PI	2A					
											STC	Q	CS		014		
											STO	Q	CS		014		
Valve Name	**RHR PMP SUCTION FROM HOT LEGS CTMT PENETRATION 92**																
3RHS*MV8702B	26912-1	A-4	1	A	12.0	GT	MO	A	LC	O/C	LJ	J					
											LT	CS/BI					
											PI	2A					
											STC	Q	CS		014		
											STO	Q	CS		014		

Valve Tag	P&ID	P&ID Coor.	Safety Class	Cat.	Size	Valve Type	Act. Type	Active / Passive	Normal Position	Safety Position	Test Type	Test Freq.	Alt. Freq.	Relief Request	Deferred Just.	Tech. Pos.	Notes
Valve Name	RESIDUAL HEAT REMOVAL INLET ISOLATION VALVE																
3RHS*MV8702C	26912-1	A-2	1	A	12.0	GT	MO	A	LC	O/C	LT	CS/BI					
											PI	2A					
											STC	Q	CS		014		
											STO	Q	CS		014		
Valve Name	XFER CONN ISO (CONTACT ISI BEFORE WORK ON VLV)																
3RHS*MV8716A	26912-1	I-7	2	B	10.0	GT	MO	A	O	O/C	PI	2A					
											STC	Q	CS		015		
Valve Name	XFER CONN.ISO (CONTACT ISI BEFORE ANY WORK ON VL)																
3RHS*MV8716B	26912-1	I-9	2	B	10.0	GT	MO	A	O	O/C	PI	2A					
											STC	Q	CS		015		
Valve Name	A RHS SUCTION HEADER CONTAINMENT RELIEF (91-INSIDE)																
3RHS*RV37A	26912-1	F-1	2	C	0.75	RV	SA	A	C	O/C	SRV	10A					
Valve Name	B RHS SUCTION HEADER CONTAINMENT RELIEF																
3RHS*RV37B	26912-1	A-4	2	C	0.75	RV	SA	A	C	O/C	SRV	10A					
Valve Name	RHS PUMP A SUCTION HEADER RELIEF (91-OUTSIDE)																
3RHS*RV8708A	26912-1	C-3	2	AC	4.0	RV	SA	A	C	O/C	LJ	J					
											SRV	10A					

Valve Tag	P&ID	P&ID Coor.	Safety Class	Cat.	Size	Valve Type	Act. Type	Active / Passive	Normal Position	Safety Position	Test Type	Test Freq.	Alt. Freq.	Relief Request	Deferred Just.	Tech. Pos.	Notes
Valve Name	**RHS PUMP B SUCTION HEADER RELIEF (92-OUTSIDE)**																
3RHS*RV8708B	26912-1	A-7	2	AC	4.0	RV	SA	A	C	O/C	LJ	J					
											SRV	10A					
Valve Name	**RHR PUMP 1A DISCHARGE CHECK**																
3RHS*V001	26912-1	D-6	2	C	10.0	CS	SA	A	SYS	O	FSC	Q	CM			CM-25	
											FSO	Q	CM			CM-25	
Valve Name	**RHR PUMP 1B DISCHARGE CHECK**																
3RHS*V005	26912-1	C-10	2	C	10.0	CS	SA	A	SYS	O	FSC	Q	CM			CM-25	
											FSO	Q	CM			CM-25	
Valve Name	**RHR Test line to RWST isolation**																
3RHS*V043	26912-1	H7	2	A	8	GT	HA	P	LC	C	LT	2A					NRC Information Notice (IN) 91-56
Valve Name	**CTMT RECIRCULATION PUMP DISCHARGE CTMT PENETRATION (110-OUTSIDE)**																
3RSS*MOV20A	26912-3	L-9	2	A	10.0	BF	MO	A	O	O/C	LJ	J					
											PI	2A					
											STC	Q					
											STO	Q					

Valve Tag	P&ID	P&ID Coor.	Safety Class	Cat.	Size	Valve Type	Act. Type	Active / Passive	Normal Position	Safety Position	Test Type	Test Freq.	Alt. Freq.	Relief Request	Deferred Just.	Tech. Pos.	Notes
Valve Name	CTMT RECIRCULATION PUMP DISCHARGE CTMT PENETRATION (108-OUTSIDE)																
3RSS*MOV20B	26912-3	J-4	2	A	10.0	BF	MO	A	O	O/C	LJ	J					
											PI	2A					
											STC	Q					
											STO	Q					
Valve Name	CTMT RECIRCULATION PUMP DISCHARGE CTMT PENETRATION (109-OUTSIDE)																
3RSS*MOV20C	26912-3	J-7	2	A	10.0	BF	MO	A	O	O/C	LJ	J					
											PI	2A					
											STC	Q					
											STO	Q					
Valve Name	CTMT RECIRCULATION PUMP DISCHARGE CTMT PENETRATION (107-OUTSIDE)																
3RSS*MOV20D	26912-3	L-3	2	A	10.0	BF	MO	A	O	O/C	LJ	J					
											PI	2A					
											STC	Q					
											STO	Q					
Valve Name	CTMT RECIRCULATION PUMP SUCTION CTMT PENETRATION (102-OUTSIDE)																
3RSS*MOV23A	26912-3	C-10	2	A	12.0	BF	MO	A	O	O/C	LJ	J					
											PI	2A					
											STC	Q					
											STO	Q					

Valve Tag	P&ID	P&ID Coor.	Safety Class	Cat.	Size	Valve Type	Act. Type	Active / Passive	Normal Position	Safety Position	Test Type	Test Freq.	Alt. Freq.	Relief Request	Deferred Just.	Tech. Pos.	Notes
Valve Name	CTMT RECIRCULATION PUMP SUCTION CTMT PENETRATION (104-OUTSIDE)																
3RSS*MOV23B	26912-3	C-4	2	A	12.0	BF	MO	A	O	O/C	LJ	J					
											PI	2A					
											STC	Q					
											STO	Q					
Valve Name	CTMT RECIRCULATION PUMP SUCTION CTMT PENETRATION (103-OUTSIDE)																
3RSS*MOV23C	26912-3	C-8	2	A	12.0	BF	MO	A	O	O/C	LJ	J					
											PI	2A					
											STC	Q					
											STO	Q					
Valve Name	CTMT RECIRCULATION PUMP SUCTION CTMT PENETRATION (105-OUTSIDE)																
3RSS*MOV23D	26912-3	C-2	2	A	12.0	BF	MO	A	O	O/C	LJ	J					
											PI	2A					
											STC	Q					
											STO	Q					
Valve Name	3RSS*P1A MINIFLOW RECIRC																
3RSS*MOV38A	26912-3	F-11	2	B	4.0	GT	MO	A	C	O/C	PI	2A					
											STC	Q					
											STO	Q					

Valve Tag	P&ID	P&ID Coor.	Safety Class	Cat.	Size	Valve Type	Act. Type	Active / Passive	Normal Position	Safety Position	Test Type	Test Freq.	Alt. Freq.	Relief Request	Deferred Just.	Tech. Pos.	Notes
Valve Name	**3RSS*P1B MINIFLOW RECIRC**																
3RSS*MOV38B	26912-3	F-5	2	B	4.0	GT	MO	A	C	O/C	PI	2A					
											STC	Q					
											STO	Q					
Valve Name	**RSS TO RHR TRANSFER CONNECTION**																
3RSS*MV8837A	26912-3	J-9	2	B	8.0	GT	MO	A	C	O/C	PI	2A					
											STC	Q	R		036		
											STO	Q	R		036		
Valve Name	**RSS TO RHR TRANSFER CONNECTION**																
3RSS*MV8837B	26912-3	J-4	2	B	8.0	GT	MO	A	C	O/C	PI	2A					
											STC	Q	R		036		
											STO	Q	R		036		
Valve Name	**RSS TO RHR TRANSFER CONNECTION**																
3RSS*MV8838A	26912-3	J-8	2	B	8.0	GT	MO	A	LC	O/C	PI	2A					
											STO	Q	R		036		
Valve Name	**RSS TO RHR TRANSFER CONNECTION**																
3RSS*MV8838B	26912-3	J-3	2	B	8.0	GT	MO	A	LC	O/C	PI	2A					
											STO	Q	R		036		

Valve Tag	P&ID	P&ID Coor.	Safety Class	Cat.	Size	Valve Type	Act. Type	Active / Passive	Normal Position	Safety Position	Test Type	Test Freq.	Alt. Freq.	Relief Request	Deferred Just.	Tech. Pos.	Notes
Valve Name	CTMT RECIRCULATION PUMP DISCHARGE CTMT PENETRATION (107-INSIDE)																
3RSS*V003	26912-3	L-4	2	AC	10.0	CS	SA	A	SYS	O/C	FSC	Q	CM			CM-09	
											FSO	Q	CM			CM-09	
											LJ	J					
Valve Name	CTMT RECIRCULATION PUMP DISCHARGE CTMT PENETRATION (108-INSIDE)																
3RSS*V006	26912-3	K-5	2	AC	10.0	CS	SA	A	SYS	O/C	FSC	Q	CM			CM-09	
											FSO	Q	CM			CM-09	
											LJ	J					
Valve Name	CTMT RECIRCULATION PUMP DISCHARGE CTMT PENETRATION (109-INSIDE)																
3RSS*V009	26912-3	K-7	2	AC	10.0	CS	SA	A	SYS	O/C	FSC	Q	CM			CM-09	
											FSO	Q	CM			CM-09	
											LJ	J					
Valve Name	CTMT RECIRCULATION PUMP DISCHARGE CTMT PENETRATION (110-INSIDE)																
3RSS*V012	26912-3	L-7	2	AC	10.0	CS	SA	A	SYS	O/C	DIS	CM	CM			CM-09	
											FSO	Q	CM			CM-09	
											LJ	J					
Valve Name	CHECK VLV CTMT RECIRC. PP B/D TO LPSI																
3RSS*V035	26912-3	J-3	2	C	8.0	CS	SA	A	SYS	O	FSC	Q	CM			CM-26	
											FSO	Q	CM			CM-26	

Valve Tag	P&ID	P&ID Coor.	Safety Class	Cat.	Size	Valve Type	Act. Type	Active / Passive	Normal Position	Safety Position	Test Type	Test Freq.	Alt. Freq.	Relief Request	Deferred Just.	Tech. Pos.	Notes
Valve Name	**CHECK VLV CTMT RECIRC. PP A/C TO LPSI**																
3RSS*V036	26912-3	J-9	2	C	8.0	CS	SA	A	SYS	O	FSC	Q	CM			CM-26	
											FSO	Q	CM			CM-26	
Valve Name	**RSS PUMP CASING VENT**																
3RSS*V907	26912-3	F-10	2	C	1	CH	SA	A	SYS	O	FSC	Q			039		
											FSO	Q			039		
Valve Name	**RSS PUMP CASING VENT**																
3RSS*V908	26912-3	F-4	2	C	1	CH	SA	A	SYS	O	FSC	Q			039		
											FSO	Q			039		
Valve Name	**RSS PUMP CASING VENT**																
3RSS*V909	26912-3	F-8	2	C	1	CH	SA	A	SYS	O	FSC	Q			039		
											FSO	Q			039		
Valve Name	**RSS PUMP CASING VENT**																
3RSS*V910	26912-3	F-2	2	C	1	CH	SA	A	SYS	O	FSC	Q			039		
											FSO	Q			039		
Valve Name	**SERVICE AIR LINE CTMT PENETRATION (52-OUTSIDE)**																
3SAS*V050	26938-1	F-4	2	A	2.0	GL	HA	P	LC	C	LJ	J					
Valve Name	**CONTAINMENT HEADER ISOLATION (52-INSIDE)**																
3SAS*V875	26938-1	F-4	2	A	2.0	GL	HA	P	LC	C	LJ	J					

Valve Tag	P&ID	P&ID Coor.	Safety Class	Cat.	Size	Valve Type	Act. Type	Active / Passive	Normal Position	Safety Position	Test Type	Test Freq.	Alt. Freq.	Relief Request	Deferred Just.	Tech. Pos.	Notes
Valve Name	'A' Fuel Pool Cooler Outlet																
3SFC*RV52A	26911	J-8	3	C	0.75	RV	SA	A	C	O/C	SRV	10A					
Valve Name	'B' Fuel Pool Cooler Outlet																
3SFC*RV52B	26911	J-10	3	C	0.75	RV	SA	A	C	O/C	SRV	10A					
Valve Name	FUEL POOL COOLING PUMP P1A DISCHARGE CHECK VALVE																
3SFC*V003	26911	G-9	3	C	10.0	CS	SA	A	SYS	O/C	FSC	Q					
											FSO	Q					
Valve Name	FUEL POOL COOLING PUMP P1B DISCHARGE CHECK VALVE																
3SFC*V006	26911	G-11	3	C	10.0	CS	SA	A	SYS	O/C	FSC	Q					
											FSO	Q					
Valve Name	REFUEL CAVITY PURIFICATION OUTLET CTMT PENETRAT(60-OUTSIDE)																
3SFC*V989	26911	E-3	2	A	4.0	GT	HA	P	LC	C	LJ	J					
Valve Name	REFUELING CAVITY PURIFICATION OUTLET CTMT PENETRATION (60-INSIDE)																
3SFC*V990	26911	D-3	2	A	4.0	GT	HA	P	LC	C	LJ	J					
Valve Name	REFUELING CAVITY PURIFICATION INLET CTMT PENETRATION (59-INSIDE)																
3SFC*V991	26911	D-1	2	A	3.0	GT	HA	P	LC	C	LJ	J					
Valve Name	REFUEL CAVITY PURIFICATION INLET CTMT PEN (59-OUTSIDE)																
3SFC*V992	26911	E-1	2	A	3.0	GT	HA	P	LC	C	LJ	J					

Valve Tag	P&ID	P&ID Coor.	Safety Class	Cat.	Size	Valve Type	Act. Type	Active / Passive	Normal Position	Safety Position	Test Type	Test Freq.	Alt. Freq.	Relief Request	Deferred Just.	Tech. Pos.	Notes
Valve Name	STEAM GENERATOR 1 CHEMICAL ADDITION CONTAINMENT ISOLATION																
3SGF*AOV24A	26931	M-7	2	B	0.75	GL	AO	A	C	C	FT	Q				TP-04	
											PI	2A					
											STC	Q					
Valve Name	STEAM GENERATOR 2 CHEMICAL ADDITION CONTAINMENT ISOLATION																
3SGF*AOV24B	26931	L-7	2	B	0.75	GL	AO	A	C	C	FT	Q				TP-04	
											PI	2A					
											STC	Q					
Valve Name	STEAM GENERATOR 3 CHEMICAL ADDITION CONTAINMENT ISOLATION																
3SGF*AOV24C	26931	K-7	2	B	0.75	GL	AO	A	C	C	FT	Q				TP-04	
											PI	2A					
											STC	Q					
Valve Name	STEAM GENERATOR 4 CHEMICAL ADDITION CONTAINMENT ISOLATION																
3SGF*AOV24D	26931	J-7	2	B	0.75	GL	AO	A	C	C	FT	Q				TP-04	
											PI	2A					
											STC	Q					
Valve Name	CHG PMP TEST LINE ISOL																
3SIH*AV8882	26913-1	J-4	2	B	0.75	GL	AO	P	C	C	PI	2A					

Valve Tag	P&ID	P&ID Coor.	Safety Class	Cat.	Size	Valve Type	Act. Type	Active / Passive	Normal Position	Safety Position	Test Type	Test Freq.	Alt. Freq.	Relief Request	Deferred Just.	Tech. Pos.	Notes
Valve Name	**SIP HOT LEG TEST LINE**																
3SIH*AV8889A	26913-2	K-8	2	B	0.75	GL	AO	P	C	C	PI	2A					
Valve Name	**SIP HOT LEG TEST LINE**																
3SIH*AV8889C	26913-2	L-8	2	B	0.75	GL	AO	P	C	C	PI	2A					
Valve Name	**SAFETY INJECTION PUMP DISCHARGE PENETRATION(98-INSIDE)**																
3SIH*CV8823	26913-2	J-8	2	A	0.75	GL	AO	P	C	C	FT	Q				TP-04	
											LJ	J					
											PI	2A					
Valve Name	**SAFETY INJECTION PUMP DISCHARGE PENETRATION(97-INSIDE)**																
3SIH*CV8824	26913-2	J-8	2	A	0.75	GL	AO	P	C	C	FT	Q				TP-04	
											LJ	J					
											PI	2A					
Valve Name	**CHARGING TO COLD LEGS CTMT PENETRATION(51-INSIDE)**																
3SIH*CV8843	26913-1	I-5	2	A	0.75	GL	AO	A	C	C	FT	Q				TP-04	
											LJ	J					
											PI	2A					

Valve Tag	P&ID	P&ID Coor.	Safety Class	Cat.	Size	Valve Type	Act. Type	Active / Passive	Normal Position	Safety Position	Test Type	Test Freq.	Alt. Freq.	Relief Request	Deferred Just.	Tech. Pos.	Notes
Valve Name	SAFETY INJECT TEST LINE CTMT PENETRATION(99-INSIDE)																
3SIH*CV8871	26913-1	E-8	2	A	0.75	GL	AO	A	C	C	FT	Q				TP-04	
											LJ	J					
											PI	2A					
											STC	Q					
Valve Name	SAFETY INJECTION PUMP DISCHARGE TO HOT LEG CTMT PENET(96-INSIDE)																
3SIH*CV8881	26913-2	K-4	2	A	0.75	GL	AO	A	C	C	FT	Q				TP-04	
											LJ	J					
											PI	2A					
											STC	Q					
Valve Name	ACCUMULATOR FILL LINE CTMT PENETRATION(99-OUTSIDE)																
3SIH*CV8888	26913-2	J-4	2	A	0.75	GL	AO	A	C	C	FT	Q				TP-04	
											LJ	J					
											PI	2A					
											STC	Q					
Valve Name	SAFETY INJECT TEST LINE CTMT PENETRATION(99-OUTSIDE)																
3SIH*CV8964	26913-1	G-8	2	A	0.75	GL	AO	A	O	C	FT	Q				TP-04	
											LJ	J					
											PI	2A					
											STC	Q					

Valve Tag	P&ID	P&ID Coor.	Safety Class	Cat.	Size	Valve Type	Act. Type	Active / Passive	Normal Position	Safety Position	Test Type	Test Freq.	Alt. Freq.	Relief Request	Deferred Just.	Tech. Pos.	Notes
Valve Name	**CHARGING TO COLD LEGS CTMT PENETRATION (51-OUTSIDE)**																
3SIH*MV8801A	26913-1	H-3	2	A	4.0	GT	MO	A	C	O/C	LJ	J					
											PI	2A					
											STC	Q	CS		017		
											STO	Q	CS		017		
Valve Name	**CHARGING TO COLD LEGS CTMT PENETRATION (51-OUTSIDE)**																
3SIH*MV8801B	26913-1	H-4	2	A	4.0	GT	MO	A	C	O/C	LJ	J					
											PI	2A					
											STC	Q	CS		017		
											STO	Q	CS		017		
Valve Name	**SAFETY INJECT PUMP DSCHRGE HOT LEG CTMT PENETRATION (96-OUTSIDE)**																
3SIH*MV8802A	26913-2	H-3	2	A	4.0	GT	MO	A	LC	O/C	LJ	J					
											PI	2A					
											STC	Q	CS		023		
											STO	Q	CS		023		
Valve Name	**SAFETY INJECT PP DSCHRGE TO HOT LEG CTMT PENETRATION(97-OUTSIDE)**																
3SIH*MV8802B	26913-2	H-9	2	A	4.0	GT	MO	A	LC	O/C	LJ	J					
											PI	2A					
											STC	Q	CS		023		
											STO	Q	CS		023		

Valve Tag	P&ID	P&ID Coor.	Safety Class	Cat.	Size	Valve Type	Act. Type	Active / Passive	Normal Position	Safety Position	Test Type	Test Freq.	Alt. Freq.	Relief Request	Deferred Just.	Tech. Pos.	Notes
Valve Name	REFUELING WATER STORAGE TANK TO SAFETY INJECTION PUMP																
3SIH*MV8806	26913-2	A-6	2	B	8.0	GT	MO	A	O	O/C	PI	2A					
											STC	Q	CS		018		
Valve Name	LOW PRESS SAFETY INJECTION CHG PMP SUCT X-CONNECT																
3SIH*MV8807A	26913-2	C-4	2	B	6.0	GT	MO	A	C	O/C	PI	2A					
											STC	Q					
											STO	Q					
Valve Name	LOW PRESSURE SAFETY INJECTION CHARGING PUMP SUCTION CROSS CONNECT																
3SIH*MV8807B	26913-2	C-5	2	B	6.0	GT	MO	A	C	O/C	PI	2A					
											STC	Q					
											STO	Q					
Valve Name	SAFETY INJECTION PUMP MASTER MINIFLOW ISOLATION																
3SIH*MV8813	26913-2	D-6	2	A	3.0	GT	MO	A	O	O/C	LT	2A					
											PI	2A					
											STC	Q	CS		019		
Valve Name	SAFETY INJECT SYS PMP MINIFLOW ISOLATION 3SIH*P1A																
3SIH*MV8814	26913	E-4	2	A	1.5	GT	MO	A	O	O/C	LT	2A					
											PI	2A					
											STC	Q					

Valve Tag	P&ID	P&ID Coor.	Safety Class	Cat.	Size	Valve Type	Act. Type	Active / Passive	Normal Position	Safety Position	Test Type	Test Freq.	Alt. Freq.	Relief Request	Deferred Just.	Tech. Pos.	Notes
Valve Name	**A SAFETY INJECTION PUMP TO COLD LEG INJECTION**																
3SIH*MV8821A	26913-2	G-4	2	B	4.0	GT	MO	A	O	O/C	PI	2A					
											STC	Q					
Valve Name	**B SAFETY INJECTION PUMP TO COLD LEG INJECTION**																
3SIH*MV8821B	26913-2	G-8	2	B	4.0	GT	MO	A	O	O/C	PI	2A					
											STC	Q					
Valve Name	**SAFETY INJECT PP DISCHARGE TO COLD LEG CTMT PENETRATION(98-OUTSIDE)**																
3SIH*MV8835	26913-2	H-7	2	A	4.0	GT	MO	A	O	O/C	LJ	J					
											PI	2A					
											STC	Q	CS		020		
Valve Name	**B SAFETY INJECTION PUMP MINIFLOW ISOLATION**																
3SIH*MV8920	26913-2	E-8	2	A	1.5	GT	MO	A	O	O/C	LT	2A					
											PI	2A					
											STC	Q					
Valve Name	**A SAFETY INJECTION PUMP SUCTION ISOLATION**																
3SIH*MV8923A	26913-2	B-5	2	B	6.0	GT	MO	A	O	O/C	PI	2A					
											STC	Q					

Valve Tag	P&ID	P&ID Coor.	Safety Class	Cat.	Size	Valve Type	Act. Type	Active / Passive	Normal Position	Safety Position	Test Type	Test Freq.	Alt. Freq.	Relief Request	Deferred Just.	Tech. Pos.	Notes
Valve Name	**B SAFETY INJECTION PUMP SUCTION ISOLATION**																
3SIH*MV8923B	26913-2	B-8	2	B	6.0	GT	MO	A	O	O/C	PI	2A					
											STC	Q					
Valve Name	**LOW PRESSURE SAFETY INJECT CHARGING PUMP SUCTION**																
3SIH*MV8924	26913-2	D-5	2	B	6.0	GT	MO	P	O	O	PI	2A					
Valve Name	**HI PRESSURE SAFETY INJECTION COMMON HEADER RELIEF**																
3SIH*RV8851	26913-2	G-7	2	C	0.75	RV	SA	A	C	O/C	SRV	10A					
Valve Name	**"A" SAFETY INJECTION PUMP DISCHARGE HEADER RELIEF**																
3SIH*RV8853A	26913	G-3	2	C	0.75	RV	SA	A	C	O/C	SRV	10A					
Valve Name	**"B" SAFETY INJECTION PUMP DISCHARGE HEADER RELIEF**																
3SIH*RV8853B	26913	G-9	2	C	0.75	RV	SA	A	C	O/C	SRV	10A					
Valve Name	**SAFETY INJECTION SUCTION HEADER RELIEF**																
3SIH*RV8858	26913-2	C-6	2	C	0.75	RV	SA	A	C	O/C	SRV	10A					
Valve Name	**PENETRATION 99 OVER PRESSURE PROTECTION (99-OUTSIDE)**																
3SIH*RV8870	26913-1	E-8	2	AC	0.75	RV	SA	A	C	O/C	LJ	J					
											SRV	10A					
Valve Name	**3SIH*P1A SUCTION LINE RELIEF**																
3SIH*RV8925A	26913-2	B-2	2	C	0.75	RV	SA	A	C	O/C	SRV	10A					

Valve Tag	P&ID	P&ID Coor.	Safety Class	Cat.	Size	Valve Type	Act. Type	Active / Passive	Normal Position	Safety Position	Test Type	Test Freq.	Alt. Freq.	Relief Request	Deferred Just.	Tech. Pos.	Notes
Valve Name	**3SIH*P1B SUCTION LINE RELIEF**																
3SIH*RV8925B	26913-2	C-10	2	C	0.75	RV	SA	A	C	O/C	SRV	10A					
Valve Name	**CHARGING TO COLD LEGS (51-INSIDE)**																
3SIH*V005	26913-1	J-3	1	AC	3.0	CS	SA	A	C	O/C	FSC	Q	CM			CM-56	
											FSO	Q	CM			CM-56	
											LJ	J					
											LT	2A					
Valve Name	**VCW015-X-2 RWST SPLY TO HPSI PP'S CHK.**																
3SIH*V011	26913-2	B-7	2	AC	8.0	CS	SA	A	C	O/C	FSC	Q	R		016		
											FSO	Q	R		016		
											LT	2A					
Valve Name	**"A" HPSI PUMP DISCHARGE CHECK .**																
3SIH*V013	26913-2	E-2	2	C	4.0	CS	SA	A	C	O/C	FSC	Q	CM			CM-56	
											FSO	Q	CM			CM-56	
Valve Name	**B HPSI PUMP DISCHARGE CHECK**																
3SIH*V017	26913-2	E-10	2	C	4.0	CS	SA	A	C	O/C	FSC	Q	CM			CM-56	
											FSO	Q	CM			CM-56	

Valve Tag	P&ID	P&ID Coor.	Safety Class	Cat.	Size	Valve Type	Act. Type	Active / Passive	Normal Position	Safety Position	Test Type	Test Freq.	Alt. Freq.	Relief Request	Deferred Just.	Tech. Pos.	Notes
Valve Name	SAFETY INJECT PP DSCHARG TO COLD LEG CTMT PENETRATION(98-INSIDE)																
3SIH*V022	26913-2	K-5	2	AC	2.0	CL	SA	A	C	O/C	FSC	Q	CM			CM-18A	
											FSO	Q	CM			CM-18A	
											LJ	J					
Valve Name	SAFETY INJECT PP DSCHARG TO COLD LEG #3 (98-INSIDE)																
3SIH*V024	26913-2	K-7	2	AC	2.0	CL	SA	A	C	O/C	FSC	Q	CM			CM-18B	
											FSO	Q	CM			CM-18B	
											LJ	J					
Valve Name	SAFETY INJECT PP DSCHARG TO COLD LEG CTMT PENETRATION(98-INSIDE)																
3SIH*V026	26913-2	K-6	2	AC	2.0	CL	SA	A	C	O/C	FSC	Q	CM			CM-18B	
											FSO	Q	CM			CM-18B	
											LJ	J					
Valve Name	SAFETY INJECT PP DSCHARG TO COLD LEG CTMT PENETRATION(98-INSIDE)																
3SIH*V028	26913-2	K-6	2	AC	2.0	CL	SA	A	C	O/C	FSC	Q	CM			CM-18A	
											FSO	Q	CM			CM-18A	
											LJ	J					
Valve Name	VCS150-A-2 HPSI A MINIFLOW CHK.																
3SIH*V081	26913-2	E-4	2	C	1.5	CL	SA	A	C	O	FSC	Q	CM			CM-21	
											FSO	Q	CM			CM-21	

Valve Tag	P&ID	P&ID Coor.	Safety Class	Cat.	Size	Valve Type	Act. Type	Active / Passive	Normal Position	Safety Position	Test Type	Test Freq.	Alt. Freq.	Relief Request	Deferred Just.	Tech. Pos.	Notes
Valve Name	**VCS150-A-2 HPSI B MINIFLOW CHK.**																
3SIH*V083	26913-2	E-8	2	C	1.5	CL	SA	A	C	O	FSC	Q	CM			CM-21	
											FSO	Q	CM			CM-21	
Valve Name	**SAFETY INJECT PP DSCHRGE TO HOT LEGS CTMT PENETRATION(97-INSIDE)**																
3SIH*V110	26913-2	J-10	1	AC	2.0	CL	SA	A	C	O/C	FSC	Q	CS/BI		001		
											FSO	Q	R		011		
											LJ	J					
											LT	CS/BI					
Valve Name	**SAFETY INJECT PP DSCHRGE TO HOT LEGS CTMT PENETRATION(97-INSIDE)**																
3SIH*V112	26913-2	K-9	1	AC	2.0	CL	SA	A	C	O/C	FSC	Q	CS/BI		001		
											FSO	Q	R		011		
											LJ	J					
											LT	CS/BI					
Valve Name	**LOW PRESSURE SI TO HIGH PRESSURE SI**																
3SIL*AV8872A	26912-2	D-11	2	B	0.75	GL	AO	P	C	C	PI	2A					
Valve Name	**LOW PRESSURE SI TO HIGH PRESSURE SI**																
3SIL*AV8872B	26912-2	F-10	2	B	0.75	GL	AO	P	C	C	PI	2A					
Valve Name	**LOW PRESSURE SI TO HIGH PRESSURE SI**																
3SIL*AV8872C	26912-2	I-9	2	B	0.75	GL	AO	P	C	C	PI	2A					

Valve Tag	P&ID	P&ID Coor.	Safety Class	Cat.	Size	Valve Type	Act. Type	Active / Passive	Normal Position	Safety Position	Test Type	Test Freq.	Alt. Freq.	Relief Request	Deferred Just.	Tech. Pos.	Notes
Valve Name	LOW PRESSURE SI TO HIGH PRESSURE SI																
3SIL*AV8872D	26912-2	L-9	2	B	0.75	GL	AO	P	C	C	PI	2A					
Valve Name	REACTOR COOLANT CHECK VALVE LEAKAGE TEST																
3SIL*AV8877A	26912-2	C-7	2	B	0.75	GL	AO	P	C	C	PI	2A					
Valve Name	REACTOR COOLANT CHECK VALVE LEAKAGE ISOLATION																
3SIL*AV8877B	26912-2	F-7	2	B	0.75	GL	AO	P	C	C	PI	2A					
Valve Name	REACTOR COOLANT CHECK VALVE LEAKAGE TEST																
3SIL*AV8877C	26912-2	I-7	2	B	0.75	GL	AO	P	C	C	PI	2A					
Valve Name	REACTOR COOLANT CHECK VALVE LEAKAGE TEST																
3SIL*AV8877D	26912-2	L-7	2	B	0.75	GL	AO	P	C	C	PI	2A					
Valve Name	SAFETY INJECT ACCUMULATE TANK 1 FILL FROM HIGH PRESS SAFETY INJ																
3SIL*AV8878A	26912-2	B-6	2	B	1.0	GL	AO	P	C	C	PI	2A					
Valve Name	SAFETY INJECT ACCUMULATE TANK 2 FILL FROM HIGH PRESS SAFETY INJ																
3SIL*AV8878B	26912-2	E-6	2	B	1.0	GL	AO	P	C	C	PI	2A					
Valve Name	SAFETY INJECT ACCUMULATE TANK 3 FILL FROM HIGH PRESS SAFETY INJ																
3SIL*AV8878C	26912-2	H-6	2	B	1.0	GL	AO	P	C	C	PI	2A					
Valve Name	SAFETY INJECT ACCUMULATE TANK 4 FILL FROM HIGH PRESS SAFETY INJ																
3SIL*AV8878D	26912-2	K-6	2	B	1.0	GL	AO	P	C	C	PI	2A					

Valve Tag	P&ID	P&ID Coor.	Safety Class	Cat.	Size	Valve Type	Act. Type	Active / Passive	Normal Position	Safety Position	Test Type	Test Freq.	Alt. Freq.	Relief Request	Deferred Just.	Tech. Pos.	Notes
Valve Name	**REACTOR COOLANT CHECK VALVE LEAKAGE TEST**																
3SIL*AV8879A	26912-2	C-8	2	B	0.75	GL	AO	P	C	C	PI	2A					
Valve Name	**REACTOR COOLANT CHECK VALVE LEAKAGE TEST**																
3SIL*AV8879B	26912-2	F-8	2	B	0.75	GL	AO	P	C	C	PI	2A					
Valve Name	**REACTOR COOLANT CHECK VALVE LEAKAGE TEST**																
3SIL*AV8879C	26912-2	I-8	2	B	0.75	GL	AO	P	C	C	PI	2A					
Valve Name	**REACTOR COOLANT CHECK VALVE LEAKAGE TEST**																
3SIL*AV8879D	26912-2	L-8	2	B	0.75	GL	AO	P	C	C	PI	2A					
Valve Name	**LPSI TEST VALVE**																
3SIL*AV8889B	26912-1	K-7	2	B	0.75	GL	AO	P	C	C	PI	2A					
Valve Name	**LPSI TEST VALVE**																
3SIL*AV8889D	26912-1	K-9	2	B	0.75	GL	AO	P	C	C	PI	2A					
Valve Name	**RHR PUMP DISCHARGE TO HOT LEGS CTMT PENETRATION (95-INSIDE)**																
3SIL*CV8825	26912-1	L-8	2	A	0.75	GL	AO	A	C	C	FT	Q				TP-04	
											LJ	J					
											PI	2A					
											STC	Q					

Valve Tag	P&ID	P&ID Coor.	Safety Class	Cat.	Size	Valve Type	Act. Type	Active / Passive	Normal Position	Safety Position	Test Type	Test Freq.	Alt. Freq.	Relief Request	Deferred Just.	Tech. Pos.	Notes
Valve Name	NITROGEN TO SAFETY INJECTION ACCUMULATOR CTMT PENETRAT (14-OUTSIDE)																
3SIL*CV8880	26912-2	E-2	2	A	1.0	GL	AO	A	C	C	FT	Q				TP-04	
											LJ	J					
											PI	2A					
											STC	Q					
Valve Name	RHR PUMP DISCHARGE TO COLD LEGS CTMT PENETRATION (93-INSIDE)																
3SIL*CV8890A	26912-1	N-4	2	A	0.75	GL	AO	A	C	O	FT	Q				TP-04	
											LJ	J					
											PI	2A					
											STC	Q					
Valve Name	RHR PUMP DISCHARGE TO COLD LEGS CTMT PENETRATION (94-INSIDE)																
3SIL*CV8890B	26912-1	N-3	2	A	0.75	GL	AO	A	C	O	FT	Q				TP-04	
											LJ	J					
											PI	2A					
											STC	Q					
Valve Name	NITROGEN TO SAFETY INJECTION ACCUM CTMT PENETRATION (14-INSIDE)																
3SIL*CV8968	26912-2	G-2	2	A	1.0	GL	AO	A	C	C	FT	Q				TP-04	
											LJ	J					
											PI	2A					
											STC	Q					

Valve Tag	P&ID	P&ID Coor.	Safety Class	Cat.	Size	Valve Type	Act. Type	Active / Passive	Normal Position	Safety Position	Test Type	Test Freq.	Alt. Freq.	Relief Request	Deferred Just.	Tech. Pos.	Notes
Valve Name	**SAFETY INJECTION ACCUMULATOR TANK N2 VENT VALVE**																
3SIL*HCV943A	26912-2	L-2	2	B	1.0	GL	SO	A	C	O	PI	2A					
											STO	Q					
Valve Name	**SAFETY INJECTION ACCUMULATOR TKS NITROGEN VENT VALVE**																
3SIL*HCV943B	26912-2	K-2	2	B	1.0	GL	SO	A	C	O	PI	2A					
											STO	Q					
Valve Name	**LOW PRESSURE SAFETY INJECT TO CHARGING PMP SUCTION**																
3SIL*MV8804A	26912-1	J-3	2	B	8.0	GT	MO	A	C	O/C	PI	2A					
											STC	Q					
											STO	Q					
Valve Name	**LOW PRESSURE SAFETY INJECT TO CHARGING PMP SUCTION**																
3SIL*MV8804B	26912-1	H-11	2	B	8.0	GT	MO	A	C	O/C	PI	2A					
											STC	Q					
											STO	Q					
Valve Name	**SAFETY INJECT ACCUMULATOR TANK #1 OUTLET ISOLATION**																
3SIL*MV8808A	26912-2	B-7	2	B	10.0	GT	MO	A	O	O/C	PI	2A					
											STC	Q	CS		024		

Valve Tag	P&ID	P&ID Coor.	Safety Class	Cat.	Size	Valve Type	Act. Type	Active / Passive	Normal Position	Safety Position	Test Type	Test Freq.	Alt. Freq.	Relief Request	Deferred Just.	Tech. Pos.	Notes
Valve Name	**SI ACCUM TANK #2 OUTLET ISOLATION**																
3SIL*MV8808B	26912-2	E-7	2	B	10.0	GT	MO	A	O	O/C	PI	2A					
											STC	Q	CS		024		
Valve Name	**SI ACCUM TANK #3 OUTLET ISOLATION**																
3SIL*MV8808C	26912-2	I-7	2	B	10.0	GT	MO	A	O	O/C	PI	2A					
											STC	Q	CS		024		
Valve Name	**SI ACCUM TANK #4 OUTLET ISOLATION**																
3SIL*MV8808D	26912-2	L-7	2	B	10.0	GT	MO	A	O	O/C	PI	2A					
											STC	Q	CS		024		
Valve Name	**RHR PMP DISCHGARGE TO COLD LEGS CTMT PENETRATION (93-OUTSIDE)**																
3SIL*MV8809A	26912-1	K-6	2	A	10.0	GT	MO	A	O	O/C	LJ	J					
											PI	2A					
											STC	Q	CS		022		
											STO	Q	CS		022		
Valve Name	**RHR PMP DISCHARGE TO COLD LEGS CTMT PENETRATION (94-OUTSIDE)**																
3SIL*MV8809B	26912-1	J-10	2	A	10.0	GT	MO	A	O	O/C	LJ	J					
											PI	2A					
											STC	Q	CS		022		
											STO	Q	CS		022		

Valve Tag	P&ID	P&ID Coor.	Safety Class	Cat.	Size	Valve Type	Act. Type	Active / Passive	Normal Position	Safety Position	Test Type	Test Freq.	Alt. Freq.	Relief Request	Deferred Just.	Tech. Pos.	Notes
Valve Name	(A) RHR PUMP SUCTION ISOLATION FROM RWST																
3SIL*MV8812A	26912-1	C-5	2	B	12.0	GT	MO	A	O	O/C	PI	2A					
											STC	Q					
Valve Name	(B) RHR PUMP SUCTION ISOLATION FROM RWST																
3SIL*MV8812B	26912-1	B-8	2	B	12.0	GT	MO	A	O	O/C	PI	2A					
											STC	Q					
Valve Name	RHR PMP DISCHARGE TO HOT LEGS CTMT PENETRATION (95-OUTSIDE)																
3SIL*MV8840	26912-1	I-8	2	A	8.0	GT	MO	P	C	C	LJ	J					
											PI	2A					
Valve Name	RHS PUMP COMMON DISCHARGE HEADER RELIEF																
3SIL*RV8842	26912-1	I-8	2	C	0.75	RV	SA	A	C	O/C	SRV	10A					
Valve Name	ACCUMULATOR TANK RELIEF																
3SIL*RV8855A	26912-2	C-3	2	C	1.0	RV	SA	A	C	O/C	SRV	10A					
Valve Name	ACCUMULATOR TANK RELIEF																
3SIL*RV8855B	26912-2	F-3	2	C	1.0	RV	SA	A	C	O/C	SRV	10A					
Valve Name	ACCUMULATOR TANK RELIEF																
3SIL*RV8855C	26912-2	I-3	2	C	1.0	RV	SA	A	C	O/C	SRV	10A					
Valve Name	ACCUMULATOR TANK RELIEF																
3SIL*RV8855D	26912-2	K-3	2	C	1.0	RV	SA	A	C	O/C	SRV	10A					

Valve Tag	P&ID	P&ID Coor.	Safety Class	Cat.	Size	Valve Type	Act. Type	Active / Passive	Normal Position	Safety Position	Test Type	Test Freq.	Alt. Freq.	Relief Request	Deferred Just.	Tech. Pos.	Notes
Valve Name	**A RHS PUMP DISCHARGE HEADER RELIEF**																
3SIL*RV8856A	26912-1	K-4	2	C	0.75	RV	SA	A	C	O/C	SRV	10A					
Valve Name	**B RHS PUMP DISCHARGE HEADER RELIEF**																
3SIL*RV8856B	26912-1	J-10	2	C	0.75	RV	SA	A	C	O/C	SRV	10A					
Valve Name	**ACCUMULATOR N2 SUPPLY**																
3SIL*RV8857	26912-2	H-1	2	C	1.5	RV	SA	A	C	O/C	SRV	10A					
Valve Name	**SAFETY INJECTIONS ACCUM TANK 1 NITROGEN SUPPLY**																
3SIL*SV8875A	26912-2	B-3	2	B	1.0	GL	SO	A	C	O/C	FT	Q				TP-04	
											PI	2A					
											STC	Q					
											STO	Q					
Valve Name	**SAFETY INJECTIONS ACCUM TANK 2 NITROGEN SUPPLY**																
3SIL*SV8875B	26912-2	E-3	2	B	1.0	GL	SO	A	C	O/C	FT	Q				TP-04	
											PI	2A					
											STC	Q					
											STO	Q					

Valve Tag	P&ID	P&ID Coor.	Safety Class	Cat.	Size	Valve Type	Act. Type	Active / Passive	Normal Position	Safety Position	Test Type	Test Freq.	Alt. Freq.	Relief Request	Deferred Just.	Tech. Pos.	Notes
Valve Name	**SAFETY INJECTIONS ACCUM TANK 3 NITROGEN SUPPLY**																
3SIL*SV8875C	26912-2	I-3	2	B	1.0	GL	SO	A	C	O/C	FT	Q				TP-04	
											PI	2A					
											STC	Q					
											STO	Q					
Valve Name	**SAFETY INJECT TANK 4 NITROGEN SUPPLY**																
3SIL*SV8875D	26912-2	L-3	2	B	1.0	GL	SO	A	C	O/C	FT	Q				TP-04	
											PI	2A					
											STC	Q					
											STO	Q					
Valve Name	**SAFETY INJECT ACCUM TANK 1 N2 SUPPLY**																
3SIL*SV8875E	26912-2	B-3	2	B	1.0	GL	SO	A	C	O/C	FT	Q				TP-04	
											PI	2A					
											STC	Q					
											STO	Q					
Valve Name	**SAFETY INJECT ACCUM TANK 2 N2 SUPPLY**																
3SIL*SV8875F	26912-2	E-3	2	B	1.0	GL	SO	A	C	O/C	FT	Q				TP-04	
											PI	2A					
											STC	Q					
											STO	Q					

Valve Tag	P&ID	P&ID Coor.	Safety Class	Cat.	Size	Valve Type	Act. Type	Active / Passive	Normal Position	Safety Position	Test Type	Test Freq.	Alt. Freq.	Relief Request	Deferred Just.	Tech. Pos.	Notes
Valve Name	SI ACCUM TANK 3 NITROGEN SUPPLY																
3SIL*SV8875G	26912-2	H-3	2	B	1.0	GL	SO	A	C	O/C	FT	Q				TP-04	
											PI	2A					
											STC	Q					
											STO	Q					
Valve Name	SAFETY INJECTION ACCUM TANK 4 N2 SUPPLY																
3SIL*SV8875H	26912-2	L-3	2	B	1.0	GL	SO	A	C	O/C	FT	Q				TP-04	
											PI	2A					
											STC	Q					
											STO	Q					
Valve Name	SAFETY INJECTION SUPPLY FROM RWST																
3SIL*V001	26912-1	B-2	2	B	24.0	BF	HA	A	LO	O/C	FSC	2A					
Valve Name	RHR PUMP 1A RWST SUCTION CHECK																
3SIL*V003	26912-1	C-5	2	AC	12.0	CS	SA	A	SYS	O/C	FSC	Q					
											FSO	Q	R		029		
											LT	2A					

Valve Tag	P&ID	P&ID Coor.	Safety Class	Cat.	Size	Valve Type	Act. Type	Active / Passive	Normal Position	Safety Position	Test Type	Test Freq.	Alt. Freq.	Relief Request	Deferred Just.	Tech. Pos.	Notes
Valve Name	**RHS TO RCS LOOP 1 COLD LEGS (93-INSIDE)**																
3SIL*V006	26912-1	M-5	2	AC	6.0	CS	SA	A	SYS	O/C	FSC	Q	CM			CM-59	
											FSO	Q	CM			CM-59	
											LJ	J					
Valve Name	**RHS TO RCS LOOP 2 COLD LEG (93-INSIDE)**																
3SIL*V007	26912-1	M-3	2	AC	6.0	CS	SA	A	SYS	O/C	FSC	Q	CM			CM-59	
											FSO	Q	CM			CM-59	
											LJ	J					
Valve Name	**RHR PUMP 1B RWST SUCTION CHECK**																
3SIL*V009	26912-1	B-9	2	AC	12.0	CS	SA	A	SYS	O/C	FSC	Q					
											FSO	Q	R		029		
											LT	2A					
Valve Name	**RHS TO RCS LOOP 4 COLD LEG (94-INSIDE)**																
3SIL*V012	26912-1	M-2	2	AC	6.0	CS	SA	A	SYS	O/C	FSC	Q	CM			CM-59	
											FSO	Q	CM			CM-59	
											LJ	J					

Valve Tag	P&ID	P&ID Coor.	Safety Class	Cat.	Size	Valve Type	Act. Type	Active / Passive	Normal Position	Safety Position	Test Type	Test Freq.	Alt. Freq.	Relief Request	Deferred Just.	Tech. Pos.	Notes
Valve Name	**RHS TO RCS LOOP 3 COLD LEG (94-INSIDE)**																
3SIL*V013	26912-1	M-1	2	AC	6.0	CS	SA	A	SYS	O/C	FSC	Q	CM			CM-59	
											FSO	Q	CM			CM-59	
											LJ	J					
Valve Name	**SI ACCUMULATOR A DISCHARGE TO RCS LOOP 1 COLD LEG**																
3SIL*V015	26912-2	C-8	1	AC	10.0	CS	SA	A	SYS	O/C	FSC	Q	CM			CM-10	
											FSO	Q	CM			CM-10	
											LT	2A					
Valve Name	**SI ACCUMULATOR B DISCHARGE TO RCS LOOP 2 COLD LEG**																
3SIL*V017	26912-2	F-8	1	AC	10.0	CS	SA	A	SYS	O/C	FSC	Q	CM			CM-10	
											FSO	Q	CM			CM-10	
											LT	2A					
Valve Name	**SI ACCUMULATOR C DISCHARGETO RCS LOOP 3 COLD LEG**																
3SIL*V019	26912-2	H-8	1	AC	10.0	CS	SA	A	SYS	O/C	FSC	Q	CM			CM-10	
											FSO	Q	CM			CM-10	
											LT	2A					

Valve Tag	P&ID	P&ID Coor.	Safety Class	Cat.	Size	Valve Type	Act. Type	Active / Passive	Normal Position	Safety Position	Test Type	Test Freq.	Alt. Freq.	Relief Request	Deferred Just.	Tech. Pos.	Notes
Valve Name	**SI ACCUMULATOR D DISCHARGE TO RCS LOOP 4 COLD LEG**																
3SIL*V021	26912-2	K-8	1	AC	10.0	CS	SA	A	SYS	O/C	FSC	Q	CM			CM-10	
											FSO	Q	CM			CM-10	
											LT	2A					
Valve Name	**RHR PMP DISCHARGE TO HOT LEGS (95-INSIDE)**																
3SIL*V026	26912-1	K-8	1	AC	8.0	CS	SA	A	SYS	O/C	FSC	Q	CM			CM-19	
											FSO	Q	CM			CM-19	
											LJ	J					
											LT	2A					
Valve Name	**SAFETY INJECT PP DISCHARGE TO HOT LEG CTMT PENETRATION(96-INSIDE)**																
3SIL*V027	26912-1	J-7	1	AC	2.0	CL	SA	A	SYS	O/C	FSC	Q	CS/BI		001		Leak Test performed in lieu of stroke close test.
											FSO	Q	R		011		
											LJ	J					
											LT	CS/BI					
Valve Name	**RHS/SI TO RCS LOOP 4 HOT LEG (95-INSIDE)**																
3SIL*V028	26912-1	K-8	1	AC	8.0	CS	SA	A	SYS	O/C	FSC	Q	CM			CM-19	
											FSO	Q	CM			CM-19	
											LJ	J					
											LT	2A					

Valve Tag	P&ID	P&ID Coor.	Safety Class	Cat.	Size	Valve Type	Act. Type	Active / Passive	Normal Position	Safety Position	Test Type	Test Freq.	Alt. Freq.	Relief Request	Deferred Just.	Tech. Pos.	Notes
Valve Name	**SAFETY INJECT PP DISCHARGE TO HOT LEG CTMT PENETRATION(96-INSIDE)**																
3SIL*V029	26912-1	J-9	1	AC	2.0	CL	SA	A	SYS	O/C	FSC	Q	CS/BI		001		Leak Test performed in lieu of stroke close test.
											FSO	Q	R		011		
											LJ	J					
											LT	CS/BI					
Valve Name	**RHR TO CVCS CHK.**																
3SIL*V982	26912-1	J-3	2	C	8.0	CS	SA	A	SYS	O/C	FSC	Q	CM			CM-11	
											FSO	Q	CM			CM-11	
Valve Name	**RHR TO CVCS CHECK**																
3SIL*V983	26912-1	H-11	2	C	8.0	CS	SA	A	SYS	O	FSC	Q	CM			CM-11	
											FSO	Q	CM			CM-11	
Valve Name	**RHS/SI TO RCS LOOP 4 COLD LEG**																
3SIL*V984	26912-2	M-9	1	AC	6.0	CS	SA	A	SYS	O/C	FSC	Q	CS/BI		001		Leak Test performed in lieu of stroke close test.
											FSO	Q	CS		021		
											LT	CS/BI					
Valve Name	**RHS/SI TO RCS LOOP 3 COLD LEG**																
3SIL*V985	26912-2	J-9	1	AC	6.0	CS	SA	A	SYS	O/C	FSC	Q	CS/BI		001		Leak Test performed in lieu of stroke close test.
											FSO	Q	CS		021		
											LT	CS/BI					

Valve Tag	P&ID	P&ID Coor.	Safety Class	Cat.	Size	Valve Type	Act. Type	Active / Passive	Normal Position	Safety Position	Test Type	Test Freq.	Alt. Freq.	Relief Request	Deferred Just.	Tech. Pos.	Notes
Valve Name	**RHS/SI TO RCS LOOP 2 COLD LEG**																
3SIL*V986	26912-2	G-10	1	AC	6.0	CS	SA	A	SYS	O/C	FSC	Q	CS/BI		001		Leak Test performed in lieu of stroke close test.
											FSO	Q	CS		021		
											LT	CS/BI					
Valve Name	**RHS/SI TO RCS LOOP 1 COLD LEG**																
3SIL*V987	26912-2	D-11	1	AC	6.0	CS	SA	A	SYS	O/C	FSC	Q	CS/BI		001		Leak Test performed in lieu of stroke close test.
											FSO	Q	CS		021		
											LT	CS/BI					
Valve Name	**POST ACCIDENT SAMPLE CTMT PENETRATION (115-INSIDE)**																
3SSP*CTV7	26955-1	C-8	2	A	0.75	GL	SO	A	C	C	FT	Q				TP-04	
											LJ	J					
											PI	2A					
											STC	Q					
Valve Name	**POST ACCIDENT SAMPLE RETURN CTMT PENETRATION (120 - INSIDE)**																
3SSP*CTV8	26955-1	C-10	2	A	0.75	GL	SO	A	C	C	FT	Q				TP-04	
											LT	J					
											PI	2A					
											STC	Q					

Valve Tag	P&ID	P&ID Coor.	Safety Class	Cat.	Size	Valve Type	Act. Type	Active / Passive	Normal Position	Safety Position	Test Type	Test Freq.	Alt. Freq.	Relief Request	Deferred Just.	Tech. Pos.	Notes
Valve Name	**PENETRATION Z115 OVER PRESSURE PROTECTION (115-OUTSIDE)**																
3SSP*RV62	26955-1	D-7	2	AC	0.75	RV	SA	A	C	O/C	LJ	J					
											SRV	10A					
Valve Name	**PENETRATION Z120 OVER PRESSURE PROTECTION (120-OUTSIDE)**																
3SSP*RV63	26955-1	D-9	2	AC	0.75	RV	SA	A	C	O/C	LJ	J					
											SRV	10A					
Valve Name	**POST ACCIDENT SAMPLE CTMT PENETRATION (115-OUTSIDE)**																
3SSP*V013	26955-1	E-8	2	A	0.75	GL	HA	P	LC	C	LJ	J					
Valve Name	**PAS SAMPLE RTRN CTMT PENETRATION (120-OUTSIDE)**																
3SSP*V014	26955-1	E-10	2	A	0.75	GL	HA	P	LC	C	LJ	J					
Valve Name	**HYDROGEN ANALIZER CAB 1A INLET**																
3SSP*V160	26955-1	I-1	2	B	0.75	GT	HA	A	LC	O	FSO	2A					
Valve Name	**HYDROGEN ANALYZER CAB 1B INLET**																
3SSP*V161	26955-1	I-4	2	B	0.75	GT	HA	A	LC	O	FSO	2A					
Valve Name	**HYDROGEN ANALIZER OUTLET**																
3SSP*V162	26955-1	I-4	2	B	0.75	GT	HA	A	LC	O	FSO	2A					
Valve Name	**HYDROGEN ANALYZER CAB 1B OUTLET**																
3SSP*V163	26955-1	I-4	2	B	0.75	GT	HA	A	LC	O	FSO	2A					

Valve Tag	P&ID	P&ID Coor.	Safety Class	Cat.	Size	Valve Type	Act. Type	Active / Passive	Normal Position	Safety Position	Test Type	Test Freq.	Alt. Freq.	Relief Request	Deferred Just.	Tech. Pos.	Notes
Valve Name	**STEAM GENERATOR NUMBER ONE BLOWDOWN SAMPLE CTMT ISOLATION**																
3SSR*CTV19A	26944-1	D-2	2	B	0.75	GL	SO	A	O	C	FT	Q				TP-04	
											PI	2A					
											STC	Q					
Valve Name	**STEAM GENERATOR NUMBER TWO BLOWDOWN SAMPLING CTMT ISOLATION**																
3SSR*CTV19B	26944-1	F-2	2	B	0.75	GL	SO	A	O	C	FT	Q				TP-04	
											PI	2A					
											STC	Q					
Valve Name	**STEAM GENERATOR NUMBER THREE BLOWDOWN SAMPLING ISOLATION**																
3SSR*CTV19C	26944-1	H-2	2	B	0.75	GL	SO	A	O	C	FT	Q				TP-04	
											PI	2A					
											STC	Q					
Valve Name	**STEAM GENERATOR NUMBER FOUR BLOWDOWN SAMPLING CTMT ISOLATION**																
3SSR*CTV19D	26944-1	J-2	2	B	0.75	GL	SO	A	O	C	FT	Q				TP-04	
											PI	2A					
											STC	Q					

Valve Tag	P&ID	P&ID Coor.	Safety Class	Cat.	Size	Valve Type	Act. Type	Active / Passive	Normal Position	Safety Position	Test Type	Test Freq.	Alt. Freq.	Relief Request	Deferred Just.	Tech. Pos.	Notes
Valve Name	PRESSURIZER VAPOR SPACE SAMPLE CTMT PENETRATION (12C-INSIDE)																
3SSR*CTV20	26944-2	J-4	2	A	0.75	GL	SO	A	O	C	FT	Q				TP-04	
											LJ	J					
											PI	2A					
											STC	Q					
Valve Name	PRESSURIZER VAPOR SPACE SAMPLE CTMT PENETRATION (12C-OUTSIDE)																
3SSR*CTV21	26944-2	J-5	2	A	0.75	GL	SO	A	O	C	FT	Q				TP-04	
											LJ	J					
											PI	2A					
											STC	Q					
Valve Name	REACTOR COOL HOT LEGS SAMPLE CONTAINMENT PENETRATION (12A-INSIDE)																
3SSR*CTV26	26944-2	H-4	2	A	0.75	GL	SO	A	O	C	FT	Q				TP-04	
											LJ	J					
											PI	2A					
											STC	Q					
Valve Name	REACTOR COOL HOT LEGS SAMPLE CTMT PENETRATION (12A-OUTSIDE)																
3SSR*CTV27	26944-2	H-5	2	A	0.75	GL	SO	A	O	C	FT	Q				TP-04	
											LJ	J					
											PI	2A					
											STC	Q					

Valve Tag	P&ID	P&ID Coor.	Safety Class	Cat.	Size	Valve Type	Act. Type	Active / Passive	Normal Position	Safety Position	Test Type	Test Freq.	Alt. Freq.	Relief Request	Deferred Just.	Tech. Pos.	Notes
Valve Name	**REACTOR COOLANT COLD LEG SAMPLE CTMT PENETRATION (13A-INSIDE)**																
3SSR*CTV29	26944-2	F-4	2	A	0.75	GL	SO	A	O	C	FT	Q				TP-04	
											LJ	J					
											PI	2A					
											STC	Q					
Valve Name	**REACTOR COOLANT COLD LEG SAMPLE CTMT PENETRATION (13A-OUTSIDE)**																
3SSR*CTV30	26944-2	F-5	2	A	0.75	GL	SO	A	O	C	FT	Q				TP-04	
											LJ	J					
											PI	2A					
											STC	Q					
Valve Name	**SAFETY INJECTION ACCUM SAMPLE CTMT PENETRATION (13B-INSIDE)**																
3SSR*CTV32	26944-2	D-4	2	A	0.75	GL	SO	A	O	C	FT	Q				TP-04	
											LJ	J					
											PI	2A					
											STC	Q					
Valve Name	**SAFETY INJECTION ACCUM SAMPLE CTMT PENETRATION (13B-OUTSIDE)**																
3SSR*CTV33	26944-2	D-5	2	A	0.75	GL	SO	A	O	C	FT	Q				TP-04	
											LJ	J					
											PI	2A					
											STC	Q					

Valve Tag	P&ID	P&ID Coor.	Safety Class	Cat.	Size	Valve Type	Act. Type	Active / Passive	Normal Position	Safety Position	Test Type	Test Freq.	Alt. Freq.	Relief Request	Deferred Just.	Tech. Pos.	Notes
Valve Name	**PZR RLF TK (PRT) GAS SAMPLE CONTAINMENT PENETRATION (12D-OUTSIDE)**																
3SSR*CV8025	26944-2	B-5	2	A	0.75	GL	SO	A	O	C	FT	Q				TP-04	
											LJ	J					
											PI	2A					
											STC	Q					
Valve Name	**PZR RLF TK (PRT) GAS SAMPLE CONTAINMENT PENETRATION (12D-INSIDE)**																
3SSR*CV8026	26944-2	B-4	2	A	0.75	GL	SO	A	O	C	FT	Q				TP-04	
											LJ	J					
											PI	2A					
											STC	Q					
Valve Name	**SERVICE WATER A DIESEL GENERATOR HEAT EXCHANGE OUTLET**																
3SWP*AOV39A	26933-4	J-8	3	B	10.0	BF	AO	A	C	O	FT	Q				TP-04	
											PI	2A					
											STO	Q					
Valve Name	**SERVICE WATER B DIESEL GENERATOR HEAT EXCHANGE OUTLET**																
3SWP*AOV39B	26933-4	J-3	3	B	10.0	BF	AO	A	C	O	FT	Q				TP-04	
											PI	2A					
											STO	Q					

Valve Tag	P&ID	P&ID Coor.	Safety Class	Cat.	Size	Valve Type	Act. Type	Active / Passive	Normal Position	Safety Position	Test Type	Test Freq.	Alt. Freq.	Relief Request	Deferred Just.	Tech. Pos.	Notes
Valve Name	"A" SERVICEWATER PUMP DISCHARGE VALVE																
3SWP*MOV102A	26933-1	E-9	3	B	30.0	BF	MO	A	SYS	O/C	PI	2A					
											STC	Q					
											STO	Q					
Valve Name	"B" SERVICEWATER PUMP DISCHARGE VALVE																
3SWP*MOV102B	26933-1	I-5	3	B	30.0	BF	MO	A	SYS	O/C	PI	2A					
											STC	Q					
											STO	Q					
Valve Name	"C" SERVICEWATER PUMP DISCHARGE VALVE																
3SWP*MOV102C	26933-1	D-7	3	B	30.0	BF	MO	A	SYS	O/C	PI	2A					
											STC	Q					
											STO	Q					
Valve Name	(D) SERVICE WATER DISCHARGE VALVE																
3SWP*MOV102D	26933-1	I-2	3	B	30.0	BF	MO	A	SYS	O/C	PI	2A					
											STC	Q					
											STO	Q					
Valve Name	TRAIN (A) CIRCULATING PUMP LUBE WATER SUPPLY																
3SWP*MOV115A	26933-4	B-8	3	B	2.0	GT	MO	A	O	C	PI	2A					
											STC	Q					

Valve Tag	P&ID	P&ID Coor.	Safety Class	Cat.	Size	Valve Type	Act. Type	Active / Passive	Normal Position	Safety Position	Test Type	Test Freq.	Alt. Freq.	Relief Request	Deferred Just.	Tech. Pos.	Notes
Valve Name	TRAIN (B) CIRCULATED PUMP LUBE WATER SUPPLY --- IN CHLORINE PIT																
3SWP*MOV115B	26933-4	B-3	3	B	2.0	GT	MO	A	O	C	PI	2A					
											STC	Q					
Valve Name	"A" SERVICE WATER PUMP STRAINER BACKWASH VALVE																
3SWP*MOV24A	26933-1	D-10	3	B	3.0	GT	MO	A	C	O	PI	2A					
											STO	Q					
Valve Name	"B" SERVICE WATER PUMP STRAINER BACKWASH VALVE																
3SWP*MOV24B	26933	G-5	3	B	3.0	GT	MO	A	C	O	PI	2A					
											STO	Q					
Valve Name	"C" SERVICE WATER PUMP STRAINER BACKWASH VALVE																
3SWP*MOV24C	26933-1	D-7	3	B	3.0	GT	MO	A	C	O	PI	2A					
											STO	Q					
Valve Name	"D" SERVICE WATER PUMP STRAINER BACKWASH VALVE																
3SWP*MOV24D	26933-1	G-3	3	B	3.0	GT	MO	A	C	O	PI	2A					
											STO	Q					
Valve Name	TR "A" SERVICEWATER SUPPLY REACTOR PLANT COMPONENT COOLING WATER																
3SWP*MOV50A	26933-2	D-8	3	B	30.0	BF	MO	A	O	O/C	PI	2A					
											STC	Q	CS		025		
											STO	Q	CS		025		

Valve Tag	P&ID	P&ID Coor.	Safety Class	Cat.	Size	Valve Type	Act. Type	Active / Passive	Normal Position	Safety Position	Test Type	Test Freq.	Alt. Freq.	Relief Request	Deferred Just.	Tech. Pos.	Notes
Valve Name	**TR "B" SERVICEWATER SUPPLY REACTOR PLANT COMPONENT COOLING WATER**																
3SWP*MOV50B	26933-2	D-4	3	B	30.0	BF	MO	A	O	O/C	PI	2A					
											STC	Q	CS		025		
											STO	Q	CS		025		
Valve Name	**"A" CNTMNT RECIRC COOLER INLET**																
3SWP*MOV54A	26933-2	J-7	3	B	18.0	BF	MO	A	C	O/C	PI	2A					
											STC	Q	6M	V-001			
											STO	Q	6M	V-001			
Valve Name	**"B" CNTMNT RECIRC COOLER INLET**																
3SWP*MOV54B	26933-2	J-4	3	B	18.0	BF	MO	A	C	O/C	PI	2A					
											STC	Q	6M	V-001			
											STO	Q	6M	V-001			
Valve Name	**"C" CNTMNT RECIRC COOLER INLET**																
3SWP*MOV54C	26933-2	I-9	3	B	18.0	BF	MO	A	C	O/C	PI	2A					
											STC	Q	6M	V-001			
											STO	Q	6M	V-001			

Valve Tag	P&ID	P&ID Coor.	Safety Class	Cat.	Size	Valve Type	Act. Type	Active / Passive	Normal Position	Safety Position	Test Type	Test Freq.	Alt. Freq.	Relief Request	Deferred Just.	Tech. Pos.	Notes
Valve Name	"D" CNTMNT RECIRC COOLER INLET																
3SWP*MOV54D	26933-2	I-2	3	B	18.0	BF	MO	A	C	O/C	PI	2A					
											STC	Q	6M	V-001			
											STO	Q	6M	V-001			
Valve Name	"A" CONTAINMENT RECIRCULATING COOLER OUTLET																
3SWP*MOV57A	26933-2	H-7	3	B	18.0	BF	MO	A	C	O/C	PI	2A					
											STC	Q					
Valve Name	"B" CONTAINMENT RECIRCULATING COOLER OUTLET																
3SWP*MOV57B	26933-2	H-5	3	B	18.0	BF	MO	A	C	O/C	PI	2A					
											STC	Q					
Valve Name	"C" CONTAINMENT RECIRCULATING COOLER OUTLET																
3SWP*MOV57C	26933-2	H-9	3	B	18.0	BF	MO	A	C	O/C	PI	2A					
											STC	Q					
Valve Name	"D" CONTAINMENT RECIRCULATING COOLER OUTLET																
3SWP*MOV57D	26933-2	H-3	3	B	18.0	BF	MO	A	C	O/C	PI	2A					
											STC	Q					
Valve Name	"A" SERVWTR HDR TURBINE PUMP COMPONENT COOL WTR HEAT EXCH SUPPLY																
3SWP*MOV71A	26933-2	D-8	3	B	18.0	BF	MO	A	O	C	PI	2A					
											STC	Q					

Valve Tag	P&ID	P&ID Coor.	Safety Class	Cat.	Size	Valve Type	Act. Type	Active / Passive	Normal Position	Safety Position	Test Type	Test Freq.	Alt. Freq.	Relief Request	Deferred Just.	Tech. Pos.	Notes
Valve Name	"B" SERVWTR HDR TURBINE PUMP COMPONENT COOL WTR HEAT EXCH SUPPLY																
3SWP*MOV71B	26933-2	D-7	3	B	18.0	BF	MO	A	O	C	PI	2A					
											STC	Q					
Valve Name	MCC Rod Control A/C Unit "A" Relief																
3SWP*RV132A	26933-2	F-11	3	C	0.75	RV	SA	A	C	O/C	SRV	10A					
Valve Name	MCC Rod Control A/C Unit "B" Relief																
3SWP*RV132B	26933-2	F-3	3	C	0.75	RV	SA	A	C	O/C	SRV	10A					
Valve Name	Control Bldg A/C Unit Water Chiller "A" Relief																
3SWP*RV89A	26933-4	K-8	3	C	0.75	RV	SA	A	C	O/C	SRV	10A					
Valve Name	Control Bldg A/C Unit Water Chiller "B" Relief																
3SWP*RV89B	26933-4	L-2	3	C	0.75	RV	SA	A	C	O/C	SRV	10A					
Valve Name	Emergency D/G Air Cooler Heat Exchanger "A" Relief																
3SWP*RV90A	26933-4	J-6	3	C	0.75	RV	SA	A	C	O/C	SRV	10A					
Valve Name	Emergency D/G Air Cooler Heat Exchanger "B" Relief																
3SWP*RV90B	26933-4	J-5	3	C	0.75	RV	SA	A	C	O/C	SRV	10A					
Valve Name	CTMT Recirc Pump A/C Unit "A" Relief																
3SWP*RV91A	26933-2	L-8	3	C	0.75	RV	SA	A	C	O/C	SRV	10A					
Valve Name	CTMT Recirc Pump A/C Unit "B" Relief																
3SWP*RV91B	26933-2	L-2	3	C	0.75	RV	SA	A	C	O/C	SRV	10A					

Valve Tag	P&ID	P&ID Coor.	Safety Class	Cat.	Size	Valve Type	Act. Type	Active / Passive	Normal Position	Safety Position	Test Type	Test Freq.	Alt. Freq.	Relief Request	Deferred Just.	Tech. Pos.	Notes
Valve Name	**Residual Heat Removal Pump A/C Unit "A" Relief**																
3SWP*RV92A	26933-2	L-6	3	C	0.75	RV	SA	A	C	O/C	SRV	10A					
Valve Name	**Residual Heat Removal Pump A/C Unit "B" Relief**																
3SWP*RV92B	26933-2	L-3	3	C	0.75	RV	SA	A	C	O/C	SRV	10A					
Valve Name	**Safety Injection Pump Cooler "A" Relief**																
3SWP*RV93A	26933-2	M-5	3	C	0.75	RV	SA	A	C	O/C	SRV	10A					
Valve Name	**Safety Injection Pump Cooler "B" Relief**																
3SWP*RV93B	26933-2	M-4	3	C	0.75	RV	SA	A	C	O/C	SRV	10A					
Valve Name	**Containment Recirculation Cooler "A" Relief**																
3SWP*RV94A	26933-2	H-6	3	C	0.75	RV	SA	A	C	O/C	SRV	10A					
Valve Name	**Containment Recirculation Cooler "B" Relief**																
3SWP*RV94B	26933-2	H-5	3	C	0.75	RV	SA	A	C	O/C	SRV	10A					
Valve Name	**Containment Recirculation Cooler "C" Relief**																
3SWP*RV94C	26933-2	H-8	3	C	0.75	RV	SA	A	C	O/C	SRV	10A					
Valve Name	**Containment Recirculation Cooler "D" Relief**																
3SWP*RV94D	26933-2	H-3	3	C	0.75	RV	SA	A	C	O/C	SRV	10A					
Valve Name	**Charging Pump Cooler "A" Relief**																
3SWP*RV96A	26933-2	F-9	3	C	0.75	RV	SA	A	C	O/C	SRV	10A					

Valve Tag	P&ID	P&ID Coor.	Safety Class	Cat.	Size	Valve Type	Act. Type	Active / Passive	Normal Position	Safety Position	Test Type	Test Freq.	Alt. Freq.	Relief Request	Deferred Just.	Tech. Pos.	Notes
Valve Name	**Charging Pump Cooler "B" Relief**																
3SWP*RV96B	26933-2	F-3	3	C	0.75	RV	SA	A	C	O/C	SRV	10A					
Valve Name	**SERVICE WATER PUMP D DISCHARGE CHECK**																
3SWP*V001	26933-1	H-2	3	C	30.0	CD	SA	A	SYS	O/C	FSC	Q	CM			CM-13	
											FSO	Q	CM			CM-13	
Valve Name	**SERVICE WATER PUMP 1B DISCHARGE CHECK**																
3SWP*V003	26933-1	H-5	3	C	30.0	CD	SA	A	SYS	O/C	FSC	Q	CM			CM-13	
											FSO	Q	CM			CM-13	
Valve Name	**SERVICE WATER PUMP 1C DISCHARGE CHECK**																
3SWP*V005	26933-1	D-7	3	C	30.0	CD	SA	A	SYS	O/C	FSC	Q	CM			CM-13	
											FSO	Q	CM			CM-13	
Valve Name	**SERVICE WATER PUMP 1A DISCHARGE CHECK**																
3SWP*V007	26933-1	D-9	3	C	30.0	CD	SA	A	SYS	O/C	FSC	Q	CM			CM-13	
											FSO	Q	CM			CM-13	
Valve Name	**3HVK*CHL1A TEMPERATURE RECIRCULATION VALVE**																
3SWP*V104	26933-4	L-6	3	C	4.0	CD	SA	A	SYS	O/C	FSC	Q	CM			CM-14	
											FSO	Q	CM			CM-14	

Valve Tag	P&ID	P&ID Coor.	Safety Class	Cat.	Size	Valve Type	Act. Type	Active / Passive	Normal Position	Safety Position	Test Type	Test Freq.	Alt. Freq.	Relief Request	Deferred Just.	Tech. Pos.	Notes
Valve Name	3HVK*CHL1B TEMPERATURE RECIRCULATION CHECK VALVE																
3SWP*V109	26933-4	L-4	3	C	4.0	CD	SA	A	SYS	O/C	FSC	Q	CM			CM-14	
											FSO	Q	CM			CM-14	
Valve Name	"A" SW to HVQ, CCI, CHECK VALVE																
3SWP*V705	26933-2	J-10	3	C	3.0	CS	SA	A	SYS	O/C	FSC	Q	CM			CM-15	
											FSO	Q	CM			CM-15	
Valve Name	"B" SW to HVQ, CCI, CHECK VALVE																
3SWP*V706	26933-2	J-1	3	C	3.0	CS	SA	A	SYS	O/C	FSC	Q	CM			CM-15	
											FSO	Q	CM			CM-15	
Valve Name	MCC & ROD CNTRL AREA BOOSTER PMP P3A SUCT CHECK VLV																
3SWP*V707	26933-2	D-9	3	C	3.0	CS	SA	A	SYS	O/C	FSC	Q	CM			CM-15	
											FSO	Q	CM			CM-15	
Valve Name	MCC & ROD CONTROL AREA BOOSTER PUMP P3B SUCTION CHECK																
3SWP*V708	26933-2	D-3	3	C	3.0	CS	SA	A	SYS	O/C	FSC	Q	CM			CM-15	
											FSO	Q	CM			CM-15	
Valve Name	SERVICE WATER BOOSTER PUMP 3A DISCHARGE CHECK.																
3SWP*V854	26933-2	E-10	3	C	3.0	CS	SA	A	SYS	O	FSC	Q	CM			CM-24	
											FSO	Q	CM			CM-24	

Valve Tag	P&ID	P&ID Coor.	Safety Class	Cat.	Size	Valve Type	Act. Type	Active / Passive	Normal Position	Safety Position	Test Type	Test Freq.	Alt. Freq.	Relief Request	Deferred Just.	Tech. Pos.	Notes
Valve Name	SERVICE WATER BOOSTER PUMP 3B DISCHARGE CHECK.																
3SWP*V867	26933-2	E-2	3	C	3.0	CS	SA	A	SYS	O	FSC	Q	CM			CM-24	
											FSO	Q	CM			CM-24	
Valve Name	PRT & CTMT DRAINS TRANSFER TANK VENT CTMT PENETRATION (29-INSIDE)																
3VRS*CTV20	26907	L-5	2	A	0.75	DI	AO	A	O	C	FT	Q				TP-04	
											LJ	J					
											PI	2A					
											STC	Q					
Valve Name	PRT & CTMT DRAINS TRANSFER TANK VENT CTMT PENETRATION(29-OUTSIDE)																
3VRS*CTV21	26907	L-7	2	A	0.75	DI	AO	A	O	C	FT	Q				TP-04	
											LJ	J					
											PI	2A					
											STC	Q					
Valve Name	SERVICE WATER A PUMP HEADER HYPOCHLORITE INJ. OUTBOARD CHECK VLV.																
3WTC*V837	26933-1	D-10	3	C	1.5	CN	SA	A	SYS	C	FSC	Q	CM			CM-47	
											FSO	Q	CM			CM-47	
Valve Name	SERVICE WATER C PUMP HEADER HYPOCHLORITE INJ. OUTBOARD CHECK VLV.																
3WTC*V840	26933-1	D-7	3	C	1.5	CN	SA	A	SYS	C	FSC	Q	CM			CM-47	
											FSO	Q	CM			CM-47	

Valve Tag	P&ID	P&ID Coor.	Safety Class	Cat.	Size	Valve Type	Act. Type	Active / Passive	Normal Position	Safety Position	Test Type	Test Freq.	Alt. Freq.	Relief Request	Deferred Just.	Tech. Pos.	Notes
Valve Name	**SERVICE WATER B PUMP HEADER HYPOCHLORITE INJ. OUTBOARD CHECK VLV.**																
3WTC*V843	26933-1	H-5	3	C	1.5	CN	SA	A	SYS	C	FSC	Q	CM			CM-47	
											FSO	Q	CM			CM-47	
Valve Name	**SERVICE WATER D PUMP HEADER HYPOCHLORITE INJ. OUTBOARD CHECK VLV.**																
3WTC*V846	26933-1	H-2	3	C	1.5	CN	SA	A	SYS	C	FSC	Q	CM			CM-47	
											FSO	Q	CM			CM-47	