ESB '83 12 13 209

TENNESSEE VALLEY AUTHORITY

DIVISION OF ENGINEERING DESIGN

WATTS BAR NUCLEAR PLANT

8312230484 (7)

CONSTRUCTION SPECIFICATION

NO. N3C-928

FOR LOCATING ATTACHMENTS ON EMBEDDED PLATES

	REVISION 0	R1	R2	R3	R4	R5
EFFECTIVE DATE	February 10, 1983	6-2-83	1-6-84			
PREPARED	Marvin P. Coney	MAC	MAC			
REVIEWED	Larry A. Fortham	RCB	RCB			
SPONSORED	R. H. Anderson	RHA	RHA			
SUBMITTED	J. H. Roberts	RoH	RoH			
RECOMMENDED (SPONSOR BR. CHIEF)	[illegible]	[illegible]	[illegible]			
CONCURRED	J. C. Standefer	[illegible]	[illegible]			
APPROVED (MGR. of CONST)	[illegible]	[illegible]	[illegible]			
APPROVED (MGR. of EN DES)	M. M. Brown	[illegible]	[illegible]			

MEDS USER W7A60 C.H. CTR

TVA 10574A (EN DES - 1-82)

8506070510 850605
PDR ADOCK 05000390
A PDR

TVA

REVISION LOG

Title: LOCATING ATTACHMENTS ON EMBEDDED PLATES

N3C-928

Revision No.	DESCRIPTION OF REVISION	Date Approved
1	Revised to incorporate provisions of WBN FCR H-9521 (WBN 830314 323) which specifically clarifies information to be included in a field change request.	6-2-83
2	Added section 2.4.3 to note that an FCR may be approved by EN DES representatives on site without a sketch if they determine by visual examination that a detailed evaluation of the plate is not required. (Reference FCR H-10917.)	1-6-84

TVA 10518 EN DES 4-81

TABLE OF CONTENTS

	Page
1.0 GENERAL	1
2.0 LOCATION OF ATTACHMENTS	1
2.1 Minimum Edge Distance	1
2.2 Minimum Spacing Between Attachments	1
2.3 Minimum Spacing Between Expansion Anchors and Attachments	1
2.4 Exemptions	1
3.0 EDGE DISTANCE	2
4.0 SPACING	2
4.1 General	2
4.2 Minimum Clear Distance	2
5.0 REFERENCES	3

TVA 10535 (EN DES-7-77)

1.0 GENERAL

This Watts Bar Nuclear Plant project construction specification provides requirements for locating attachments on embedded plates. (See reference 5.1.)

2.0 LOCATION OF ATTACHMENTS

2.1 Minimum Edge Distance

The minimum edge distances given in section 3.0 shall be applied to the location of an attachment to an embedded plate unless a Division of Engineering Design (EN DES) approved drawing, which shows both the attachment and the plate edge, specifically calls for a closer edge distance.

2.2 Minimum Spacing Between Attachments

The minimum spacing given in section 4.0 shall be applied to the spacing between attachments on an embedded plate unless an EN DES drawing which shows both attachments specifically calls for a closer spacing.

2.3 Minimum Spacing Between Expansion Anchors and Attachments

The minimum spacing between expansion anchors and attachments to embedded plates shall be in accordance with TVA General Construction Specification No. G-32, "Bolt Anchors Set in Hardened Concrete." Attachment location tolerances shall not be used to reduce the minimum edge distances or spacing.

2.4 Exemptions

2.4.1 If conformance to the requirements for edge distance or the requirements for spacing between attachments on the embedded plate is impractical, a Field Change Request (FCR) shall be submitted to EN DES. The FCR shall include the following:

2.4.1.1 The unique identification number for the embedded plate.

2.4.1.2 A sketch showing the location on the embedded plate of new attachments which do not meet the edge distance requirements and of existing attachments which are spaced closer than the minimum to the new attachment. If the new attachment is less than 18 inches from any edge of the plate, the sketch shall also show all expansion anchors adjacent to those edges which are:

(a) spaced closer to the edges of the embedded plate than the minimum given in TVA General Construction Specification No. G-32; and

2.0 LOCATION OF ATTACHMENTS (Continued)

2.4 Exemptions (Continued)

(b) spaced within a clear distance of 24 inches from the new attachment (measured parallel to the plate edge from both faces of the attachment).

The sketch shall include enough information for EN DES to determine the location and loading on each attachment.

2.4.2 Some specific sizes and types of attachments may be exempted from the requirements of this construction specification. The exempted attachments shall be those listed on EN DES drawings. Exempt attachments do not require review of their location by EN DES and need not be shown on sketches submitted to EN DES.

2.4.3 An FCR may be approved by EN DES representatives onsite without a sketch if they determine by visual examination that a detailed evaluation of the plate is not required. 2

3.0 EDGE DISTANCE

In general, the minimum clear distance between an attachment and the long edge of a rectangular plate or the edge of a square plate shall be 2 inches. The minimum clear distance between an attachment and the short edge of a rectangular plate shall be 6 inches. For a specific plate, the minimum clear distance may be reduced to the distance from the plate edge to the centerline of the row of studs parallel to the edge. (See Figure 1.)

4.0 SPACING

4.1 General

In general, the clear distance between attachments to embedded plates shall be determined by two measurements. Each measurement shall be taken parallel to a plate edge as shown in Figure 1.

4.2 Minimum Clear Distance

The minimum clear distance in at least one direction parallel to a plate edge shall be 24 inches. For a specific plate, the minimum clear distance may be reduced to two times the spacing of the stud rows which are perpendicular to the direction of measurement. (See Figure 1.)

5.0 REFERENCES

5.1 Memo from J. C. Standifer to Guenter Wadewitz, dated November 10, 1982, subject, "Watts Bar Nuclear Plant - Interim Requirements for Locating Attachments on Embedded Plates - Quality Information" (CEB 821110 017)

5.2 TVA General Construction Specification No. G-32 (R8), "Bolt Anchors Set in Hardened Concrete"

TVA 10535 (EN DES-7-77)

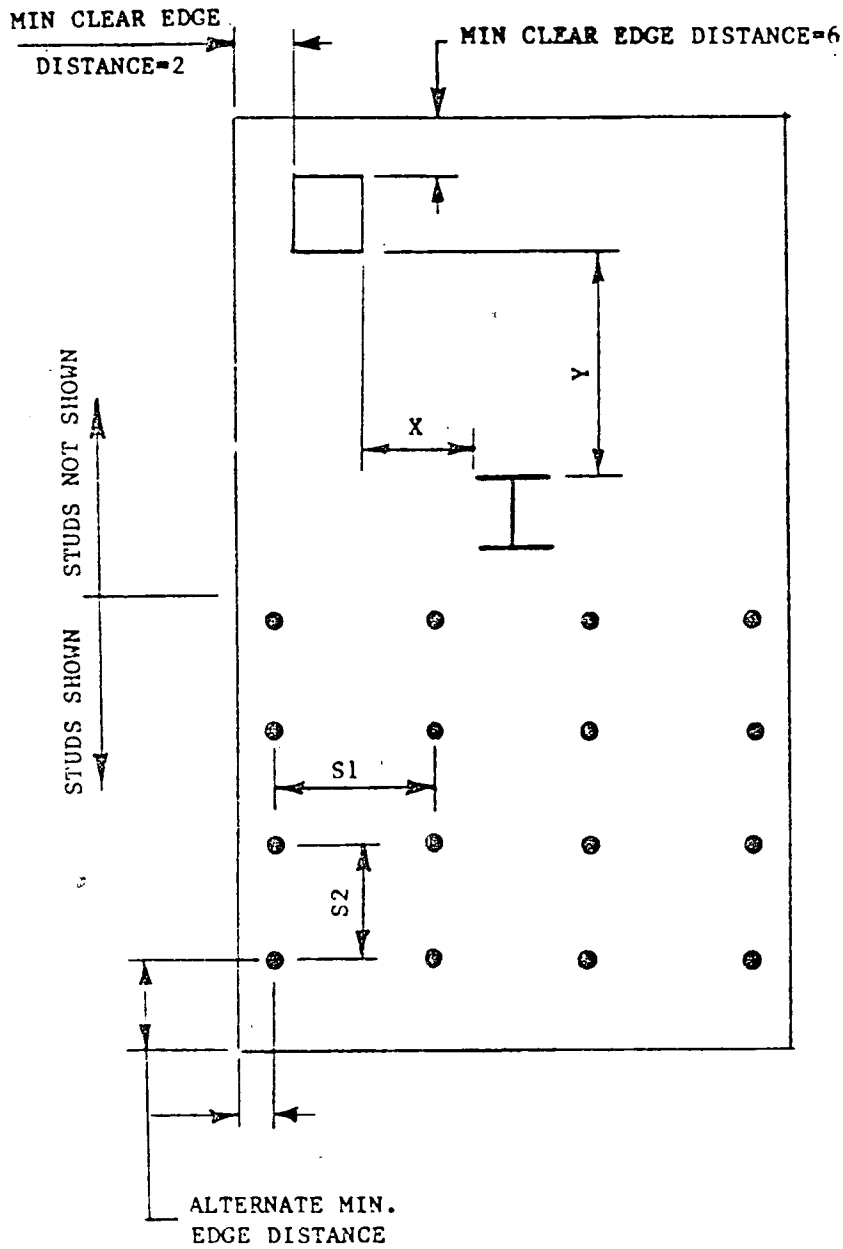

GENERAL REQUIREMENTS FOR SPACING

SPACING BETWEEN ATTACHMENTS IS ACCEPTABLE IF EITHER X OR Y IS GREATER THAN OR EQUAL TO 24

ALTERNATE REQUIREMENTS FOR SPACING

SPACING BETWEEN ATTACHMENTS IS ACCEPTABLE IF EITHER X OR Y IS GREATER THAN 2 TIMES S1 OR 2 TIMES S2 RESPECTIVELY

Figure 1

NEB 840224 218

NRC-OIE REPORTABILITY INFORMATION DISTRIBUTION

JAR:AH — Plant WBN, BLN, NTA, HCN Item No. C03-S-84-0055-D01

Title Design Basis For Dimensional Tolerances on Structural Steel Plates 840229K0056 (1)

CC:	For Info	Comments
J. W. Anderson, M155G MIB-K	X	( ) Reportable
E. G. Beasley, W12B21 C-K	X	( ) Not Reportable
R. W. Cantrell, W11A9 C-K	X	*As the responsible organization on this subject, please provide approved report input to NEB-NLS (RA Powe X 7160) by 3/12/84 in accordance with NEB 810318 268. This request was coordinated with David Level of your staff on 2/23/84.
L. J. Cooney, W6D224 C-K	X	
H. N. Culver, 249A HBB-K	X	
MEDS, W5B63 C-K	X	
L. M. Mills, 400 CST2-C	X	
F. A. Szczepanski, 220 401 B-C	X	*Special Instructions
DPM JC Standifer, 204 GB-K	X	Please add this item to your list of NCRs to be investigated upon restart of design and construction.
CPM G. Wadewitz, WBN CONST (3)	X	
SITE QA AW Rogers, WBN CONST QA	X	
OEDC PM RM Pierce, 104 ESTA-K	X	
EA Stone, 304 ESTC-K	* X	
BO Barnett W9D224C-K	+ X	
RM Hodges, 1117 IBM-K	X	
LS Cox BLN CONST (3)	X	
D. W. Wilson, W10D224 C-K	X	DWW _____, (PDM LAH _____

Distributed by NLS engineer: RA Powe

OIERPT

Extension: 7160

Address: W10B82 C-K

UNITED STATES GOVERNMENT

Memorandum

TENNESSEE VALLEY AUTHORITY

CEB 840130 004

TO : R. W. Cantrell, Acting Manager of Engineering Design, W11A9 C-K

FROM : R. O. Barnett, Chief, Civil Engineering Support Branch, W9D224 C-K

DATE : JAN 30 1984

840301K0228

(10)

SUBJECT: REQUEST FOR CLEARANCE OF PAPERS AND ARTICLES FOR NON-TVA PUBLICATIONS AND FOR FORMAL SPEECHES OR INFORMAL TALKS TO NON-TVA AUDIENCES

AUTHOR(S): Frank R. Hand, F. R. Hand Consultants, Jackson, Michigan

Name	TVA Position/Title	TVA Address
Chang-ning Sun	Civil Engineer	156 LB-K
James M. Hoskins	Civil Engineer	157 LB-K

Name TVA Position/Title TVA Address

TITLE OF PRESENTATION: Full Scale Testing and Seismic Qualification of Cement Mortar Lined Carbon Steel Pipe

TYPE OF PRESENTATION: Formal X Informal __ TVA-Owned X *Author-Owned __

TO BE PRESENTED TO: 8th World Conference on Earthquake Engineering
Name of Meeting/Activity

in San Francisco, California USA on July 21-28, 1984
City State Country Month Day Year

AND/OR PUBLISHED BY:
Name of Publication, magazine, etc. Month Day Year

NOTE: See AI 316.01 or 320.02 for attendance approval and AI 318 for reimb.

OTHER COMMENTS

Attachments: 5 Copies of Document
*Written, typed, and reproduced on employee's own time.

R. O. Barnett
Branch Chief/Project Manager

APPROVALS AND ROUTING:

(1) R. W. Cantrell 2-1-84
EN DES Manager, W11A9 C-K — Date — Comments

(2) 2/2
Chief, Planning, Reports, and Information Staff, OEDC, W12D140 C-K — Date — Comments

(3) 2/24/84
Information Officer, W12A3 C-K — Date — Comments

(4) 2/24
Chief, Planning, Reports, and Information Staff, OEDC, W12D140 C-K — Date — Comments
cc: OEDC Manager's Office, W12A5 C-K

(5) 2/24
EN DES Manager, W11A9 C-K — Date — Comments

cc: R. O. Barnett, W9D224 C-K
K. T. Myers, W11B19 C-K
R. A. Painter, E5C80 C-K
MEDS, W5B63 C-K, w/original memo and copy of attachment ~~after approval~~

Buy U.S. Savings Bonds Regularly on the Payroll Savings Plan

Eighth World Conference on Earthquake Engineering

July 21-28, 1984
San Francisco, California, U.S.A.

Purpose. The purpose of the Conference is to foster the advancement of earthquake engineering by providing a forum where international experts from all related disciplines can meet to exchange ideas and information.

Topics. The technical sessions of the Conference will cover the following topics:

1. Seismic risk and hazard.
2. Ground motion and seismicity.
3. Soil stability, soil structure interaction, and foundations.
4. Experimental methods and tests of structures and components.
5. Design of structures and structural components.
6. Special structures and critical facilities.
7. Response of structures.
8. Repair, strengthening, and retrofit of structures.
9. Urban design, socioeconomic issues, and public policy.
10. Lifelines—utility and transportation systems.
11. Non-structural systems and building contents.
12. Development and enforcement of seismic codes and standards.

The Conference will also include a special session on recent earthquakes, invited lectures, a keynote address, and opening and closing ceremonies.

Proceedings. Papers accepted for the Conference will be published in the Conference Proceedings, which will serve as a permanent reference. The Proceedings will be distributed at the Conference.

Call for Abstracts. Persons wishing to present papers at the Conference are requested to submit an abstract of their papers to the President of the International Association for Earthquake Engineering on or before July 15, 1982. Abstracts should be typewritten (single spaced) and not more than 400 words in length. The format should be as follows: title of paper; author (or authors) with full mailing address of principal author; and text of abstract. Please also indicate on the upper left corner of the page the topic number from the above list most appropriate for your paper.

Papers accepted for the Conference should be no more than 8 pages in length—typewritten, single-spaced, including figures and tables. As presently planned, presentation time at the Conference will be 15 minutes plus 5 minutes for discussion.

Prospective authors may submit more than one abstract, but only one paper per author will be accepted for the Conference—that is, no one may be an author or coauthor of more than one accepted paper.

Four copies of each abstract should be mailed to the following address:

Professor D. E. Hudson, President
International Association for Earthquake Engineering
Department of Civil Engineering
University of Southern California
Los Angeles, California 90007, U.S.A.

Because of page limitations of the Conference Proceedings and in order not to shorten the planned length of oral presentations at the Conference, all abstracts may not be accepted. Authors of selected abstracts will be notified by March 15, 1983. Detailed instructions for the complete manuscripts will be sent to prospective authors at the time of acceptance notification.

Official Language. The official language of the Conference will be English.

Place and Dates of the Conference.

July 21-28, 1984
Fairmont Hotel, San Francisco,
California, U.S.A.

The Conference will be held one week prior to the 1984 World Olympics, which are scheduled to be held July 28-August 12, 1984 in Los Angeles, California (650 km south of San Francisco).

Steering Committee.

R. B. Matthiesen (Chairman), M. S. Agbabian, P. C. Jennings, R. G. Johnston, F. G. McLean, C. Rojahn, H. C. Shah, B. M. Wyllie, L. A. Wyllie.

Host Organization.

Earthquake Engineering Research Institute
2620 Telegraph Avenue
Berkeley, California 94704, U.S.A.

Additional Information. Information regarding the payment of the registration fee, accommodations, exhibits, social events, guest programs, and other tours will be included in subsequent announcements.

Because it is not feasible to send future announcements to all individuals who have received this first announcement, the Steering Committee asks that you detach and send the form below to the following address:

EERI–8WCEE
2620 Telegraph Avenue
Berkeley, California 94704, U.S.A.

The return of this form will ensure that you will receive all future announcements. Thank you.

December 1981

FULL SCALE TESTING AND SEISMIC QUALIFICATION OF CEMENT MORTAR LINED CARBON STEEL PIPE

F R HAND (I)
C N SUN (II)
J M HOSKINS (III)
PRESENTING AUTHOR: F R HAND

SUMMARY

A full-scale testing program consisting of laboratory tests, field tests and vibration measurements was conducted for seismic qualification of cement-mortar lined carbon steel pipes. Pipe samples 30-inch and 18-inch in diameter were subjected to three-edge-bearing, cyclic loading, torsion, drop, impact and bending tests. A 90-degree elbow was subjected to bending tests. The results of the tests are presented. Based on these data a conventional, commercially produced cement-mortar lined pipe is fully adequate for its intended function in a low to moderate seismic area.

INTRODUCTION

Corrosion and incrustation in carbon steel raw water pipes have been found to be problems at many existing facilities. Lining existing and new carbon steel raw water pipes with cement mortar is one way to correct these problems. However, the performance of the cement-mortar lining under a variety of loading conditions, including earthquake, is either not well known or well documented. This paper described a full-scale testing program to structurally qualify the cement-mortar lined carbon steel pipes for both nuclear and non-nuclear applicatic . The testing program consists of laboratory tests, field tests and vibration measurements during shipping. Pipe sizes are 18- and 30-inch diameters. The ·es were lined by a commercial firm.

LINING OPERATION AND PREPARATION OF PIPE SPECIMENS

A total of 100 feet of 30-inch diameter pipe, 20 feet of 18-inch diameter pipe and a 90-degree elbow of 30-inch diameter were lined in accordance with AWWA C602 requirements. The 30-inch diameter pipes and elbow are ASME SA155-KCF70, Class 2, electric-fusion-welded carbon steel pipes fabricated from ASTM A516, Grade 70 steel plate with a minimum tensile strength of 70 ksi and a minimum yield strength of 38 ksi. The 18-inch diameter pipe is ASME SA106, Grade B, seamless carbon steel pipe with a minimum tensile strength of 60 ksi and a minimum yield strength of 35 ksi. The pipes were bought new and had been in yard storage for approximately 12 months. The interior surface condition was similar to Grade B carbon steel by the Steel Structures Preparation Standards for Painting Steel Structures (SSPC-Vis 1-67 T). Minimal cleaning effort was required to remove loose mill scale by wiping with a burlap bag.

The cement-mortar was composed of cement, sand and potable water. The cement was Portland Cement, Type II, conforming to ASTM C 150 and weighing

(I) Civil Engineer, F R Hand Consultants, Jackson Michigan, USA
(II) Civil Engineer, Tenessee Valley Authority, Knoxville Tenessee, USA
(III) Civil Engineer, Tenessee Valley Authority, Knoxville Tenessee, USA

MI1083-5577AMP03

94 pounds per bag. A manufactured sand conforming to ASTM C 144 and weighing 100 pounds per bag, was used. Proportion of cement to sand was 1 part cement to 1.1 parts sand by weight (approximately 1 bag to 1 bag). Water was adjusted as needed for workability. Estimated water to cement ratio was 0.3 by weight. A slump of 5½ inches was recorded using a 12-inch cone. Tests on mortar samples, both from fog-room cured and cured inside the 30-inch pipe, yielded ranges for compressive strength of 8 to 11 ksi, tensile strengths of 440 to 610 psi and modulus of elasticity of 3950 to 5240 ksi.

Mixing of the cement mortar was accomplished in a continuous operation that included immediate pumping, through a rubber hose, to the lining machine. The mortar was centrifugally applied onto the interior surface of the pipe by a rapidly revolving head. The mortar was thrown in a tangential direction and stuck to the wall upon contact. Immediately following this, the troweling operation was accomplished by means of rotating steel trowels (for 30-inch pipes) or conical-shaped drag trowel (for 18-inch pipe). The 90-degree elbow was lined by machine and troweled by hand. A relatively smooth surface was obtained after troweling. No excess water appeared on the surface (bleeding). All pipes were lined horizontally.

Water and curing compounds were used on separate pipe sections. Curing was found to be the most important factor in the entire lining operation. Both methods were effective and the water curing was simple to carry out with no undesirable side effects. Specimens were either fully moist curried, moist curried for 4 days and then air dried, or completely air dried. All fully curried linings showed no sign of any hairline cracks. The 4-day cured specimens developed large cracks soon after exposure to the environment. The air dried specimens developed cracks and separation between the lining and steel pipe wall after two days. This clearly indicates the importance of curing on the condition of the lining. However, the presence of these defects did not adversely effect the tested performance of the linings.

The lining thickness at the top is usually less than that at the bottom. Among 112 checked locations on the ends of the pipe specimens, 15 locations had a thickness less than the specified ¼ inch. Three of the 15 locations were from the 30-inch pipes, the rest were from the 18-inch pipe sections. The maximum thickness was 19/32 inch and the minimum thickness was 3/16 inch.

VIBRATION MEASUREMENTS DURING SHIPPING

Two accelerometers were mounted on the 30-inch diameter pipes to monitor vibrations experienced by the pipes during the 100-mile trip from lining to laboratory site. The vibrations of the 30-foot pipe (bottom) and a 2-foot section (top) were measured and recorded on tape for later analyse. The acceleration time histories and their corresponding Fourier amplitude spectra at certain high acceleration locations on the record were analyzed. The maximum acceleration experienced by the bottom pipe (30 feet long) was 0.6 g and the experienced by the top pipe (2-foot section) was 2.1 g. The recorded maximum peak to peak accelerations were 1.2 g and 3.8 g respectively. Dominant frequencies ranged from 15 to 70 Hz, mostly concentrated in the range of 15 to 50 Hz.

For most large earthquakes the dominant frequencies are in the range of 0.5 to 10 Hz. Lower frequencies indicate that a buried pipe would

experience less number of cycles of vibration during actual earthquakes. Since a pipe has to move with its surrounding soil, vibration amplification due to structure properties is minimal. No crack due to vibration was found in any of the linings after unloading. The 90-degree elbow had a large circumferential shrinkage crack due to the loss of an end cover during transportation. No crack was found before shipping. It is concluded that the linings had experienced more severe vibrations than any recorded earthquakes in terms of magnitude and number of cycles. The vibration measurements were considered as effective as shaking table tests.

LABORATORY TESTS

The 2-foot sections were subjected to three-edge bearing, cyclic loading, torsion, drop and impact tests. The 30-foot section was subjected to bending, cyclic loading and drop tests. The 90° elbow was subjected to bending test. In general, these tests were continued either until the failure of the lining or pipe occurred or until the load or deformation capacity of the testing equipment was reached.

Three Edge Bearing Tests

A procedure similar to ASTM C 497 was used. The 2-foot pipe was placed on two wooden bearing strips and a vertical load was applied to the top of the pipe through a hardwood block. Six 30-inch pipe sections and five 18-inch sections were tested. The three-edge bearing tests showed that the cement-mortar linings were flexible. The lining cracked without falling even at the maximum loading stage when plastic hinges formed in the steel and the load could not be increased. The average maximum load, change in diameter at maximum load and permanent change in diameter were 12.3 kips, 3 inches and 1.5 inches, respectively, for the 30-inch pipe sections and 22.7 kips, 1.8 inches and 1.0 inch for the 18-inch pipe sections. The maximum deformation corresponds to approximately 10% ovaling.

For the 30-inch pipes, generally, visible hairline cracks appeared at the bottom when the load reached approximately 1 kip. The 0.01-inch crack, mostly in bottom, appeared under loads between 3.5 and 6.1 kips. Most of the cracks concentrated in the top and bottom areas. The largest crack recorded without complete failure was 0.06 inch in the bottom area of the lining of the 4-day cured specimen. For the 18-inch pipes, generally, visible hairline cracks appeared at the top when the load reached approximately 3 kips. The 0.01-inch crack, mostly in the bottom, appeared under loads between 12.5 to 19.0 kips. Most of the cracks concentrated in the top and bottom areas. Strain gauges on a 30-inch section clearly show that plastic hinges initially formed at center-line level on both sides of the steel pipe under a load of 8 kips (about 2/3 of the maximum load).

Cyclic Loading Test

The cyclic loading test is a three-edge-bearing test with repeated loads applied at an average rate of once every 12 seconds. A complete loading cycle was: zero to maximum load, then to zero. The loading rate is not rapid enough for a dynamic loading test.

A 30-inch pipe section was tested 32 days after lining. No visible cracks

were observed at start of the test. The pipe was loaded to 4 kips first, unloaded and then cyclic loading was applied. Shortly after applying the static load, a hairline crack appeared in the bottom at 1-kip load and a second in the top at 2 kips. Bond break at the top was also observed at 2 kips. At 4 kips a crack close to 0.01 inch appeared in the bottom. The pipe was then cycled 20 times to 4.0 kips. At the eleventh cycle bond break between lining and pipe was indicated by a loud bang. The pipe was then cycled another 20 times to 7.0 kips. The 0.01-inch crack appeared in the bottom during the first cycle to 7 kips. More bond break occurred during the first cycle. More cracks appeared at top and bottom. The condition of the specimen at this stage is shown in Photo 1. The pipe was then cycled another 20 times to 10.0 kips and bond break developed at the eleventh cycle. Also, cracks and spalling appeared in top and bottom. Then the pipe was cycled four times to 12 kips. The top lining started to fall during the second cycle and more failure at top occurred after four cycles. Test was stopped after complete failure of the liner.

Another 30-inch pipe section with strain gauges was tested 33 days after lining. The pipe was loaded to its maximum load 12.2 kips first, unloaded and the cyclic loading was applied. During application of the static load, the 0.01-inch crack appeared at 3.5 kips. The pipe was cycled 20 times to 8 kips with no new cracks observed. The pipe was then cycled two times to 12.2 kips and complete failure occurred at the end of the second cycle. The stress reversal effects were evident from the strain gauge data.

An 18-inch pipe section was tested 32 days after lining. No visible crack was observed at the start of the test. The pipe was cycled 20 times to 12 kips, and small cracks appeared in the top at 3.5 kips and in the bottom at 4 kips, and bond break at 5 kips during the first cycle. The pipe was then cycled 20 times to 16 kips without showing any new cracks. The pipe was cycled 20 times to 20 kips with the 0.01-inch crack appearing in the bottom at 19 kips during the first cycle. The pipe was then cycled to 23.5 kips. More cracks appeared in top and bottom after the second cycle, top lining started to fall after the fourth cycle and complete failure occurred after the seventh cycle.

Impact Tests

Impact tests were performed on both 30-inch and 18-inch pipe sections 40 days after lining. A 35.5-pound missile was dropped onto the pipe from heights up to 40 feet. Two 30-inch pipe specimens and one 18-inch pipe specimen were used for 14 impact tests at different locations on the pipes. Impact loading was considered to have only local effects on the pipe. Damage to steel was not severe. Damage to lining was dependent on drop height and stiffness of the lining. The spalling damage from a 40-foot drop height is shown in Photo 2. For the 30-inch diameter pipe sections, there was no spalling for a drop height of 13 feet or less. Both axial and circumferential cracks appeared for a drop height of 15 feet or less, only axial cracks appeared for a drop height of 16 feet or more. For the 18-inch diameter pipe sections, no crack appeared in the lining for all drop heights tested.

Drop Tests

The drop tests were performed 40 days after lining. Two-foot pipe

sections were lifted to various heights up to 15 feet and then dropped on a rigid concrete slab. All cracks appeared in the bottom impact area. No lining failed.

Drop tests on the 30-foot pipe were performed 53 days after lining. The pipe for the bending tests was also used for the drop tests. The cracks in the lining due to dropping the pipe from a certain height were, as expected, confined to the impact area however, no lining failed. After each drop, the pipe was rotated by approximately 45 degrees then dropped again. Drop heights were 1, 2, 4, 6, 8 and 10 feet. The pipe was kept as level as possible. Permanent change in diameter was approximately 0.5 inch for each drop regardless of the drop height (10 feet maximum).

Torsion Tests

The torsion tests were conducted 90 days after lining. One end of a 30-inch-diameter pipe section was welded to a steel plate to simulate a fixed end of a shaft. A twisting couple was applied at the free end of the pipe section by using two identical hydraulic jacks to deliver two equal but opposite forces at the two ends of a loading beam (Photo 3). The distance between the two loading points was 5.25 feet. The torsion test was intended to simulate conditions imposed upon the pipe due to change in pipeline geometry such as at elbows. At these locations, a deflection in one part of the pipe may induce torsional load in the other part of the pipe.

Cracks concentrated in the areas close to the loading beam (a boundary condition effect) and other cracks generally ran in the vertical direction (axial). Cracks appeared at 15, 35 and 45 kips. No crack exceeded 0.01 inches. The lining near the welds started to spall and one weld failed at a load 60 kips. At the higher loads ovaling of the pipe circular section was evident. At 60 kips the minor diameter reduced to 27 1/8 inches for approximately 10% ovaling.

Bending Tests

Static and cyclic loadings were applied to the 30-foot pipe (30-inch diameter) at two loading points near the midspan for pure bending tests. The pipe was held down by anchor blocks and the loading was applied upwards. The clear span between support points was 26 feet and between load points was 30.5 inches. Four strain gauges and two deflection gages were installed. Three tests were conducted on different days.

The first test was performed 34 days after lining. It was intended to be a trail test. Crack pattern was checked at 5-kip load increments. Only minor cracking occurred up to a load of 20 kips. The load was increased to 21 kips and then cycled 20 times at 20 kips; no additional cracks appeared. At 18 kips, the steel was stressed to +7.11 ksi (compression) at the bottom (where loads were applied) and -3.12 ksi (tension) at top. The cement lining was stressed to 0.98 ksi at the bottom and -0.65 ksi at the top. The tensile stress in the lining was close to, if not exceeding, the tensile strength of the mortar at age 34 days.

The second test was performed 47 days after lining. A large number of circumferential cracks appeared after the load was increased to 30 kips.

Local failure in the lining (scabbing) and local deformation in the steel appeared at one load point at the maximum load, 80 kips. At 60 kips the steel was stressed to +13.05 ksi at bottom (where loads were applied) and -23.35 ksi at top. The cement lining was stressed to +1.7 ksi at bottom and -0.25 ksi at top. Low stresses in the lining were due to circumferential cracks which relieved most of the bending stress.

The third test was performed 52 days after lining. The pipe was rotated 180 degrees so the loads could be applied to the relatively undamaged half of the pipe. The loading beam pads were enlarged so that scabbing of the lining due to load concentration could be avoided. The pipe was loaded to 90 kips and then cycled 10 times to 75 kips. Under the 90-kip load, the beam deflection at midspan was 0.36 inch and the changes in diameter were 0.94 inch vertically and 0.38 inch horizontally. The steel was stressed to +84.1 ksi at bottom (where loads were applied) and -20.3 ksi at top. The lining was compressed to +4.13 ksi at the bottom and no data was obtained for the top stress due to broken strain gauge.

Tests on Elbow

The 90° elbow was tested three times. The loading was applied inwards at the ends of the built-up section (Photo 4). The elbow was loaded to 10 kips to test the equipment 57 days after lining. In was then loaded to 50.6 kips 61 days after lining. It was finally loaded to 54 kips 65 days after lining and this resulted in failure of the lining and the steel pipe.

At 54 kips the distance between loading points was shortened by 5 inches and a permanent shortening of 1-½ inches was recorded after unloading. The changes in diameter at center of the elbow were +3/4 inch vertically and -1-½ inches horizontally. The steel pipe was under compression at all times: +13.92 ksi at the inside and +4.06 ksi at the outside. The lining was stressed to +2.9 ksi inside and -0.45 ksi (tension) outside. This stress distribution resulted because the center of the elbow was subjected to both axial load and bending moment. At small load, the entire section was under compression; but at maximum load (54 kips), local deformation had an important effect on the stress in the lining. The stress in the lining at the outside portion of the elbow then changed from compression to tension. The circumferential crack had an unknown effect on the strength of the elbow.

FIELD TEST

A field loading test was conducted 46 days after lining. The 30-inch diameter, 40-foot long pipe with exterior coating was installed in a trench, covered with 3 feet of compacted clay and subjected to loads from a large vibratory roller. Strain gauges and deflection gauges were installed at about midspan of the pipe to measure the flattening effects of the cross section. Beam action of the pipe which would induce longitudinal strains was considered to be negligible. A Dynapac CA-25 vibratory roller was used for applying loads on the pipe. The CA-25 vibratory roller has a smooth drum with 60-inch diameter and 84-inch width. The drum weighs 10,250 pounds and delivers a dynamic force of 36,000 pounds at 28 Hz.

A complete loading cycle contained a backward pass for static load with vibrator off and a forward pass for dynamic load with vibrator. The roller

moved in both directions at an approximate speed of 2 miles per hour. After each loading cycle, lining crack pattern was checked and 6 inches of soil cover was removed. A new loading cycle was then begun. A total of seven passes were made (six cuts). After seven passes, only a thin layer (less than 1 inch) of soil remained on top of pipe. A sustained dynamic loading was applied to the pipe by parking the roller directly on top of pipe with the vibrator turned on. The sustained dynamic load was applied to the pipe for 15 minutes.

There were no visible cracks in the lining before tests began. There were no visible cracks after the roller made seven passes. When the roller was parked on top of the pipe with its vibrator turned on, cracks started to appear after 12 minutes of continuous vibration. Changes in pipe diameter due to static load from the roller were negligible and due to vibratory load were small. The maximum changes in vertical and horizontal diameters were approximately 1/8 and 1/16 inch respectively. Both maximum changes occurred when the roller was parked on top of the pipe with the vibrator turned on. The pipe had almost no soil cover for both the seventh pass and the continuous vibration loading conditions, but the changes in diameter due to continuous vibration were three times the changes due to the seventh pass. In addition, the pipe also moved vertically with the surrounding soil as a rigid body. The amount of movement was not recorded, but it was observed to have a maximum magnitude of ½ inches.

The maximum stresses in steel were 15.95 ksi compression (top) and 6.67 ksi tension (side). The maximum stresses in mortar were 1.5 ksi compression and 0.90 ksi tension. The steel stress was much lower than the 38 ksi minimum yield strength of the ASME SA155 steel. The compressive stress in the mortar was much lower than the 10 ksi compressive stress of the mortar specimen. The maximum tensile stress in the mortar exceeded the tensile strength of the mortar specimen by a factor of two. No crack was observed in areas directly under the load. This indicated that the dynamic tensile strength of the mortar may be much higher than the static tensile strength.

CONCLUSIONS

A full-scale testing program consisting of laboratory tests, field tests and vibration measurements was conducted for seismic qualification of the cement mortar lined carbon steel pipes. In general, these tests were continued either until the failure of the lining or pipe occurred or until the load or deformation capacity of the testing equipment was reached. Based on these test, the generated data and the observed performance, a conventional, commercially produced cement mortar lined pipe is fully adequate for its intended function in a low to moderate seismic area. In addition four specific conclusions are:

1. Cracks in the lining of some pipe sections existed prior to testing and did not influence the failure pattern of the linings. Thus, a perfectly uncracked lining is not required. The presence of some cracks in the inplace and cured lining is anticipated.

2. The three-edge-bearing tests showed that the cement mortar linings were flexible. The lining underwent considerable cracking prior to separation and falling of the lining. Linings only fell after the formation of the

plastic hinges in the steel.

3. The curing procedure is the most important step in the entire lining operation. This is required to control shrinkage cracks in the cement rich mortar used. A minimum of 4- to 7-day uninterrupted moisture cure is recommended.

4. Slight variation in lining thickness did not significantly affect the test data. Thus, strict control of the lining thickness is not required. The thickness tolerances given in AWWA C602-76 are adequate.

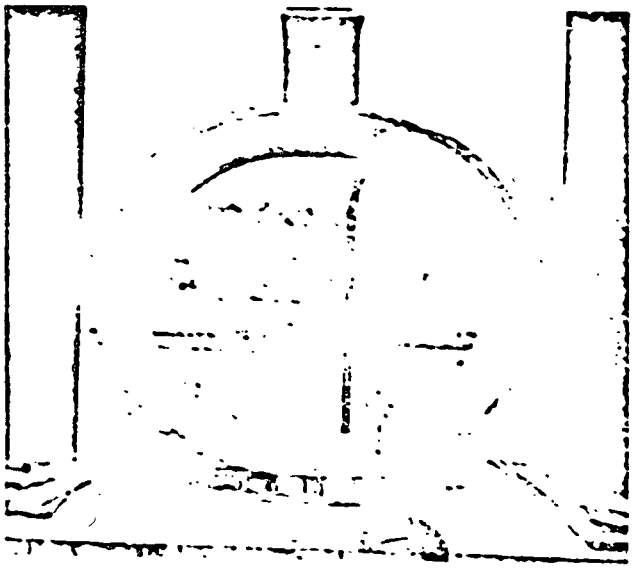

Photo 1-Cyclic test-30" pipe, fully cured (32 days)-after 20 cycles to 7k

Photo 2-Impact test-30" pipe 40' drop

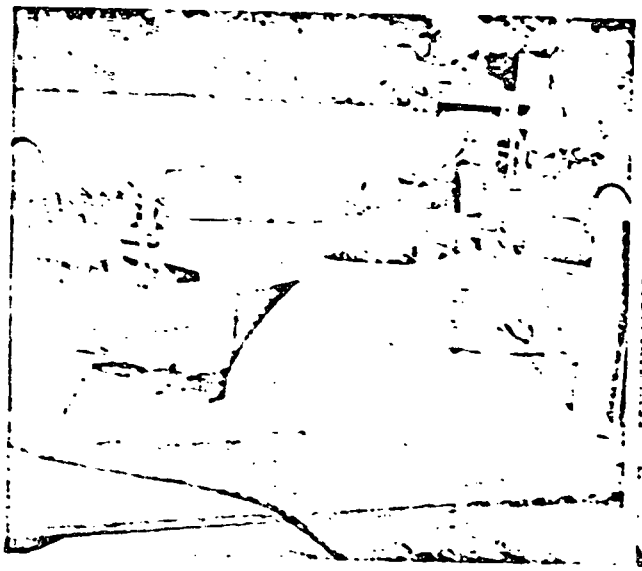

Photo 3-Torsion test-Initial setup

Photo 4-Tests on elbow-Initial setup

TVA 64 (08-84)

UNITED STATES GOVERNMENT

Memorandum

TELECOPY TO: FRANKLIN SMITH, 401 UBB-C
X 5302-C

Page 1 of 17

L99 840509 040

84 0509 20034

TENNESSEE VALLEY AUTHORITY

OQA 84 0215 601

TO : R. W. Cantrell, Acting Manager of Engineering Design, W11A9 C-K

FROM : R. W. Dibeler, Chief, Construction Quality Assurance Branch, M125 MIB-K

DATE : February 15, 1984

SUBJECT: OFFICE OF QUALITY ASSURANCE - DEVIATION REPORT NO. C03-S-84-0055-D01 - "SPECIFICATION FOR FABRICATION, ERECTION, AND INSPECTION OF STRUCTURAL AND MISCELLANEOUS STEEL"

The purpose of this memorandum is to provide you with the attached Deviation Report and request corrective action for the deviation detailed on the report form.

You are requested to provide your corrective action response within 30 days from the date of this memorandum. Please provide your response on Part 3 of the attached Deviation Report and include your expected completion date for accomplishing the corrective action. In the event the accomplishment of corrective action will take more than 30 days from the date of this memorandum, please provide a justification.

Please provide notification upon completion of corrective action.

Original Signed By
R. W Dibeler

R. W. Dibeler

TRB:JAA
Attachment
cc (Attachment):
J. W. Anderson, M1550 MIB-K
R. A. Costner, M173 MIB-K
J. A. McDonald, 238 MIB-K
MEDS, W5B63 C-K
F. A. Szczepanski, A17 UBB-C
J. Thompson, M147 MIB-K
D. J. Ward, M123 MIB-K

Concurrence: TRB RAC DJW RMD

Record Note: EN DES-MEB-NLS has been verbally notified on this deviation.

File: CQAB 8.01

2/16/84—JAA
xc: Franklin Smith, 401UBB-C

Buy U.S. Savings Bonds Regularly on the Payroll Savings Plan

DEVIATION REPORT

Office of Quality Assurance			
	Audit [ ]	Deviation Report No.:	CO3-S-84-0055-D01
	Surveillance [ ]	Date of Identification:	2/14/84
	Review [X]	Type:	1
		Key:	P01

Organization: EN DES

Location: Watts Bar Nuclear Plant

Activity: Fabrication, Erection, and Inspection of Structural & Misc. Steel

Lead OQA Branch/Staff: Construction Quality Assurance Branch

Requirement(s): 10CFR50 Appendix B Criterion III. Design Control states:

Measures shall be established to assure that applicable regulatory requirements and the design basis, as defined in para. 50.2 and as specified in the license application, for those structures, systems, and components to which this appendix applies are correctly translated into specifications, drawings, procedures, and instructions. . . .

(See Continuation Sheet)

1. Deviation:

Failure to provide the design basis for ranges of values (tolerances) chosen for controlling construction.

Summary:

TVA Construction Specification for Support and Installation of Piping Systems in Category I Structures, C-43, R-6 states in section 2.9.1:

(See Continuation Sheet)

Request for Corrective Action:

Request EN DES to provide the documentation of justification for these tolerances.

3. Participating Organization Notified to Initiate Reportability Processing:

[X] Yes [ ] No

Cognizant Evaluator: C. Thomas Tinsley Date: 2/15/84

QIS Analyst: Date:

Participating Organization/Representative:

Note: This deviation has been discussed with the participating organization representative and it is acknowledged that a deviation has been identified but is not necessarily agreed with.

Signature of Originator: C. Thomas Tinsley Date: 2/15/84

Concurrence/Approval Signature: [illegible] Date: 2-15-84

0 0 0 / 6 8 0 3 5 / 0

Page 3 of 8

Deviation Report No.: C03-8-84-0035-D01 Type: 1

3. Response to the Request for Corrective Action:

A. Reason for Deviation: (Root Cause) ☐ Required ☐ Not Required

B. Action Taken/Proposed to Correct the Deviation:

☐ Specific ☐ Generic

C. Action Taken to Prevent Recurrence: ☐ Required ☐ Not Required

D. Date Action will be Complete:

E. Was this Deviation Determined to be Reportable? ☐ Yes ☐ No

Type of Report(s) made: _____

Report No.: _____

Signature of Organization's Representative: _____

Telephone No.: _____ Date: _____

TVA 20940 (CQ-1) (8-1-84) Sheet 2

Page 4 of 7

Deviation Report No.: _____ Type: _____

4. Evaluation of Corrective Action Response:

Signature of Cognizant Evaluator: _____ Date: _____

5. Corrective Action Verification:

Signature of Cognizant Evaluator: _____ Date: _____

Closed By:

Signature of Supervisor, PSS: _____ Date: _____

DEVIATION REPORT

Office of Quality Assurance	Continuation Page	Deviation Report No.:	C03-S-84-0055-001
		Type:	1

Section No.	Item
	Requirements continued:
	Paragraph 50.2 states:
	"Design basis means that information which identifies the specific functions to be performed by a structure, system, or component of a facility, and the specific values or ranges of values chosen for controlling parameters as reference bounds for design."
1	Deviation Summary continued:

Plates

Specified Size	Dimensional Tolerance
0" x 0" to 12" x 12"	±½"
12" x 12" to 24" x 24"	±1"
24" x 24" and larger	±1½"

No documented justification for these tolerances could be produced by EN DES, OQA, or Construction personnel contacted. Therefore, the G spec is not in accordance with the requirements of 10CFR50.

Additional Background:

FSAR, WNP, 3.8.4.2 states...design and construction of Category I structures...are based on appropriate sections of the following codes, standards, and specifications.

AISC 'Specification for the Design, Fabrication, and Erection of Structural Steel for Buildings'...which states under Standard Mill Practice for Rectangular Sheared Plates and Universal Mill Plates, that the permissible variation under specified width and length is ¼". No specific guide for plate tolerances other than Standard Mill Practice could be found in AISC. However, it is unclear how a milled plate could differ from a shop fabricated plate relative to design.

1. Technical Reason why C03-S-84-0055-D01 is a Type 1 Deviation:

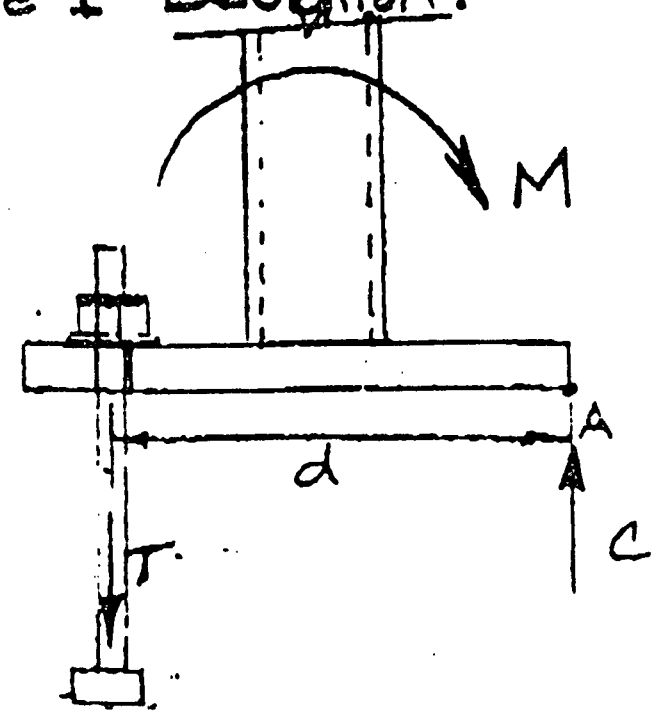

Assume RIGID PLATE

$$\Sigma M_A = 0 = M - dT + \cancel{0(C)}$$

$$M = dT$$

- Assuming M is constant, IF YOU REDUCE d, you must <u>INCREASE T</u> (Bolt Tension)

∴ a reduction of plate width and keeping edge distance constant is <u>Unconservative</u>

Unless Justified, this situation would render these supports unacceptable or indeterminate. (Turn)

Surveillance No. C035B408.55-X01

Review of WBNP-QCP-2.04 rev 14

Refer To Surveillance Report

Discussed the problems concerning this problem with the following people between 2/8 and 2/14 and was unable to get ~~any~~ resolution.

Jamie Collins	CQAE	Knoxville
Frank Stallkem	ENDES	Knoxville
Tom Roberts	ENDES	Knoxville
John Nicas	CES	Knoxville
Bob Snyder	ETWR	Knoxville
Mike Freeman	Field Civil	WBNP
Bob Warren	Field Civil	WBNP
Kieth Warren	Proc. & TNG.	WBNP
Robert Cendhil	CEB-WBNP	Knoxville
Newton Perry	CE Support	Knoxville
Melvin Maxwell	CE Support	Knoxville
Tom Brown	Construction	WBNP

On 2/14/84 this matter was brought to the attention of the TVA Quality Manager, Shelton Johnson x350, with no resolution.

In Conference with Don Ward, CQAB Knoxville the referenced problem was processed as a type 1 deviation - Justification on next page.

Thomas Smalley

TVA 64 (05-9-65)

UNITED STATES GOVERNMENT

Memorandum

TENNESSEE VALLEY AUTHORITY

CEB 840319 004

TO : J. W. Anderson, Manager of Quality Assurance, M155G MIB-K

FROM : R. W. Cantrell, Manager of Engineering Design (Acting), W11A9 C-K

DATE : MAR 19 1984

8403260163

(2)

SUBJECT: DEVIATION REPORT CO3-S-84-0055-D01 - SPECIFICATION FOR FABRICATION, ERECTION, AND INSPECTION OF STRUCTURAL AND MISCELLANEOUS STEEL

Reference: R. W. Dibeler's memorandum to me dated February 15, 1984 (OQA 840215 601)

We have evaluated the subject deviation report as transmitted by the referenced memorandum and our comments are as shown below.

1. TVA General Construction Specification G-43, "Support and Installation of Piping Systems in Category I Structures," specifies plate fabrication tolerances that exceed the standard mill practice given in the American Institute of Steel Construction (AISC) Manual (7th and 8th Editions). Watts Bar Nuclear Plant (WBN) Quality Control Procedure QCP-4.23-8, "Support Final Inspection," includes the fabrication tolerances for plates that are shown in G-43 under the section entitled "Acceptance Criteria." It states that the fabrication tolerances are to be as shown except where specific tolerances are shown on EN DES approved documents.

   It should be noted, however, that the tolerances given in the AISC Manual represent tolerances for measuring and cutting plate steel at the mills. The AISC specification does not address specific tolerances on plate size for fabrication of designed plates. Thus, plate size tolerances can be established as required, considering economics of fabrication and installation, provided these tolerances are considered in the design of the plate.

2. We have completed an evaluation of the effect of the tolerances in G-43 which would allow a reduction in the plate size and which would cause a subsequent increase in the stresses in the bolts as denoted by the subject deviation report. While the stresses in the anchor would increase, our evaluation of the "worst-case" condition considering maximum bending moment (represented generally by a cantilevered support) reflects that the maximum possible reduction in plate size could increase anchor bolt stresses by approximately 10 percent. This does not represent a significant increase in stresses in the plate or the bolt and is within acceptable limits of our designs.

Buy U.S. Savings Bonds Regularly on the Payroll Savings Plan

J. W. Anderson

DEVIATION REPORT C03-S-84-0055-D01 - SPECIFICATION FOR FABRICATION, ERECTION, AND INSPECTION OF STRUCTURAL AND MISCELLANEOUS STEEL

In summary, we do not view the concerns of the subject deviation report as significant from a design perspective, and thus the tolerances in G-43 which would allow a reduction in plate size are acceptable for our plate designs.

R. W. Cantrell

ROB:MGM:EDM:TT

cc: R. O. Barnett, W9D224 C-K (2)
C. Bonine, E7B24 C-K
L. J. Cooney, W6D224 C-K
R. M. Hodges, 1117 IBM-K
J. A. Raulston, W10C126 C-K
R. M. Pierce, 104 ESTA-K
J. C. Standifer, 204 GB-K
F. A. Stone, [illegible]4 ESTC-K
G. Wadewitz, Watts Bar Nuclear CONST (3)
MEDS, W5B63 C-K

Principally Prepared By: M. G. Maxwell, Extension 2090, and E. D. Mysinger, Extension 2308

024067.07

NEB 840321 225

840327T0155

(16)

~~TENNESSEE VALLEY~~ AUTHORITY

Significant Condition Report Processing Record Sheet

1. WATTS BAR & BELLEFONTE — Plant Hartsville & Yellow Creek — C03-S-84-0055-D01 — Item No. — 2/16/84 — Date Received by NLS

Title DESIGN BASIS FOR DIMENSIONAL TOLERANCES on STRUCTURAL STEEL PLATES

2. NRC-OIE Region II Notification

Ross Butcher — Inspector — 2/23/84 — Date

RA Rowe — By NLS Engineer

Indicated to NRC

( ) Reportable

(X) Potentially Reportable

called in nonreportable to P. Fredrickson on 3/19/84

3. 50.55(e) Determination: Reportable ( ) Nonreportable (X)

Donald L Williams — NLS Supervisor — 2/22/84 — Date

4. Part 21 Applies*: Yes ( ) No (X)

Donald L Williams — NLS Supervisor — 2/22/84 — Date

*Affirmative if 10CFR21 worksheet sections VI and VII are both affirmative.

5. A. Coordination with RO on Reportable NCRs

David Level — Individual	2/23/84 — Date	RAR — LE
CEB — Organization	3/12/84 — Input Due to NLS	3/19/84 — Report Due to POWER

B. Notification to Vendor if Part 4 Above is Affirmative: N/A — To Individual — Date — LE

C. Distribution of Reportability Determination Package: 3/21/84 — Date Sent — DSG — Clerk

Includes Notification to OEDC Manager if Part 4 Above is Affirmative — DSG

D. Record Sheet Copy Sent for TROI Update (✓) Done ( ) N/A — DSG — Clerk

SCRPRS 9/82

TVA 34 (08-84)

UNITED STATES GOVERNMENT

Memorandum

Rec'd 2/16/84 [illegible]

TENNESSEE VALLEY AUTHORITY

OQA '84 0215 601

TO : R. W. Cantrell, Acting Manager of Engineering Design, W11A9 C-K

FROM : R. W. Dibeler, Chief, Construction Quality Assurance Branch, M125 MIB-K

DATE : February 15, 1984

SUBJECT: OFFICE OF QUALITY ASSURANCE - DEVIATION REPORT NO. C03-S-84-0055-D01 - "SPECIFICATION FOR FABRICATION, ERECTION, AND INSPECTION OF STRUCTURAL AND MISCELLANEOUS STEEL"

The purpose of this memorandum is to provide you with the attached Deviation Report and request corrective action for the deviation detailed on the report form.

You are requested to provide your corrective action response within 30 days from the date of this memorandum. Please provide your response on Part 3 of the attached Deviation Report and include your expected completion date for accomplishing the corrective action. In the event the accomplishment of corrective action will take more than 30 days from the date of this memorandum, please provide a justification.

Please provide notification upon completion of corrective action.

R. W. Dibeler

TEB:JAA
Attachment
cc (Attachment):
J. W. Anderson, M155G MIB-K
R. A. Costner, M173 MIB-K
J. A. McDonald, 238 MIB-K
MEDS, W5B63 C-K
F. A. Szczepanski, 417 UBB-C
J. Thompson, Watts Bar
D. J. Ward, M123 MIB-K

WHK-XCopy given 2/16/84
As discussed with Tom Burdette, this concern applies to all TVA plants. [illegible] 2/16

Buy U.S. Savings Bonds Regularly on the Payroll Savings Plan

DEVIATION REPORT

Office of Quality Assurance	Audit ☐	Deviation Report No.:	C03-S-84-0055-D01
	Surveillance ☐	Date of Identification:	2/14/84
	Review ☒	Type:	1
		Key:	P01

Organization: EN DES

Location: Watts Bar Nuclear Plant

Activity: Fabrication, Erection, and Inspection of Structural & Misc. Steel

Lead OQA Branch/Staff: Construction Quality Assurance Branch

Requirement(s): 10CFR50 Appendix B Criterion III. Design Control states:

"Measures shall be established to assure that applicable regulatory requirements and the design basis, as defined in para. 50.2 and as specified in the license application, for those structures, systems, and components to which this appendix applies are correctly translated into specifications, drawings, procedures, and instructions. . . .

(See Continuation Sheet)

1. Deviation:

Failure to provide the design basis for ranges of values (tolerances) chosen for controlling construction.

Summary:

TVA Construction Specification for Support and Installation of Piping Systems in Category I Structures, C-43, R-6 states in section 2.9.1:

(See Continuation Sheet)

Request for Corrective Action:

Request EN DES to provide the documentation of justification for these tolerances.

2. Participating Organization Notified to Initiate Reportability Processing:

☒ Yes ☐ No

Cognizant Evaluator: C. Thomas Lindley 2-15-84 Date: 2/15/84

QIS Analyst: _____ Date: _____

Participating Organization/Representative:

Note: This deviation has been discussed with the participating organization representative and it is acknowledged that a deviation has been identified but is not necessarily agreed with.

Signature of Originator: C. Thomas Lindley 2-15 Date: 2/15/84

Concurrence/Approval Signature: [illegible] Date: 2-15-84

TVA 20600/OQA 7-291 Sheet 1

Deviation Report No.: C03-S-84-0055-D01 Type: 1

3. Response to the Request for Corrective Action:

A. Reason for Deviation: (Root Cause) ☐ Required ☐ Not Required

B. Action Taken/Proposed to Correct the Deviation:

☐ Specific ☐ Generic

C. Action Taken to Prevent Recurrence: ☐ Required ☐ Not Required

D. Date Action will be Complete:

E. Was this Deviation Determined to be Reportable? ☐ Yes ☐ No

Type of Report(s) made: _____

Report No.: _____

Signature of Organization's Representative: _____

Telephone No.: _____ Date: _____

Deviation Report No.: _____ Type: _____

4. Evaluation of Corrective Action Response:

Signature of Cognizant Evaluator: _____ Date: _____

5. Corrective Action Verification:

Signature of Cognizant Evaluator: _____ Date: _____

Closed By:

Signature of Supervisor, PSS: _____ Date: _____

DEVIATION REPORT

Office of Quality Assurance	Continuation Page	Deviation Report No.:	CQ3--S--84--0055--D01
		Type:	1

Section No.	Item
	Requirements continued: Paragraph 50.2 states: "Design basis means that information which identifies the specific functions to be performed by a structure, system, or component of a facility, and the specific values or ranges of values chosen for controlling parameters as reference bounds for design."
1	Deviation Summary continued: Plates Specified Size — Dimensional Tolerance 0" x 0" to 12" x 12" — ±½" 12" x 12" to 24" x 24" — ±1" 24" x 24" and larger — ±1½" No documented justification for these tolerances could be produced by EN DES, OQA, or Construction personnel contacted. Therefore, the G spec is not in accordance with the requirements of 10CFR50. Additional Background: FSAR, WBNP, 3.8.4.2 states...design and construction of Category I structures...are based on appropriate sections of the following codes, standards, and specifications. AISC 'Specification for the Design, Fabrication, and Erection of Structural Steel for Buildings'...which states under Standard Mill Practice for Rectangular Sheared Plates and Universal Mill Plates, that the permissible variation under specified width and length is ¼". No specific guide for plate tolerances other than Standard Mill Practice could be found in AISC. However, it is unclear how a milled plate could differ from a shop fabricated plate relative to design.

Surveillance No. C0358400.55-X01

Review of WBNP-QCP-2.04 rev 14.

Refer To Surveillance Report

Discussed the problems concerning this problem with the following people between 2/8 and 2/14 and was unable to get any resolution.

Jamie Collier	CQAE	Knoxville
Frank Stullern	ENDES	Knoxville
Tom Roberts	ENDES	Knoxville
John Nicols	CES	Knoxville
Bob Snyder	ETWR	Knoxville
Mike Freeman	Field Civil	WBNP
Bob Warren	Field Civil	WBNP
Kieth Warren	Proc. & TNG.	WBNP
Robert Lendhl	CEB-WBNP	Knoxville
Newton Perry	CE Support	Knoxville
Melvin Maxwell	CE Support	Knoxville
Tom Brown	Constuction	WBNP

On 2/14/84 this matter was brought to the attention of the WBNP Quality Manager, Shelton Johnson x350, with no resolution.

In Conference with Don Ward, CQAB, Knoxville the referenced problem was processed as a type 1 deviation - Justification on next page.

x6863

Thomas Smiley

1. Technical Reason why C03-5-84-0055-D01 is a Type 1 Deviation:

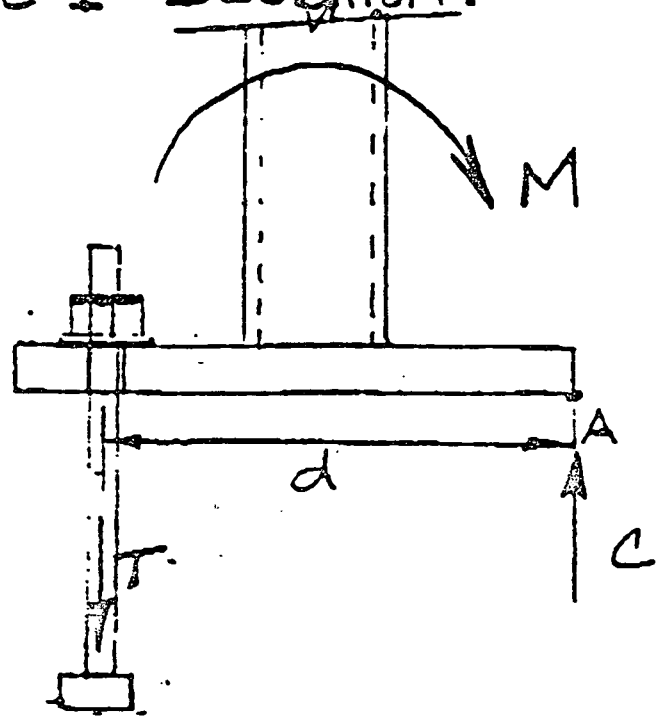

Assume Rigid Plate

$$\Sigma M_A = 0 = M - dT + \cancel{0(C)}$$

$$M = dT$$

- Assuming M is constant
  IF YOU REDUCE d, you must
  <u>INCREASE T</u> (Bolt Tension)

∴ a reduction of plate width and keeping edge distance constant is <u>Unconservative</u>

Unless Justified, this situation would render these supports unacceptable or indeterminate. (Type 1)

Supercedes NEB840224218

DETERMINATION OF REPORTABILITY
INFORMATION WORKSHEET FOR 10CFR50.55(e)

Plant WBN & Later Item Number C03-S-84-0055-D01

Title Design Basis For Dimensional Tolerances on Structural Steel Plates

NLS Engr RAPowe Date 3/15/84 NLS Supv [signature] 3/21/84 CPR 3/15/84

Determination under 50.55(e) - Reportable ( ), Non-Reportable (X) (Only true if A, B, and C1 below are affirmative and C2 is negative.)

A. The subject condition, had it remained uncorrected, ~~(could)~~ (could not) have affected adversely the safety of operations of the plant.
Explanation: TVA's Civil Engineering Branch has evaluated the deficiency previously described in NEB840224218 and has concluded that G-43 tolerances are within acceptable plate designs. CEB does not believe the condition to have any safety consequences. Therefore, had the condition remained uncorrected it could not have adversely affected the safety of operations of the plant. For CEB's conclusions see CEB840319004 (attached) [signature] 3/16/84 SAR 3/20/84

B. The item ~~(is)~~ (is not) considered significant as defined by 10CFR50.55(e).

No X. The condition represents a significant breakdown of a portion of the Quality Assurance Program for the plant. TVA ( ), Vendor ( )

No X. The condition represents a significant deficiency in final design as approved and released for construction such that the design does not conform to (issued design criteria) (criteria and bases stated in the SAR) (conditions of the construction permit).

No X. The condition represents (a significant deficiency in construction) (significant damage) to a (structure) (system) (component) which will require extensive (evaluation) (redesign) (repair) or meet (issued design criteria) (criteria and bases stated in the SAR) (conditions of the construction permit) or to establish the adequacy of the (structure) (system) (component) to perform its intended safety function.

No X. The condition represents a significant deviation from performance specifications which will require extensive (evaluation) (redesign) (repair) to establish the adequacy of a (structure) (system) (component) to meet (issued design criteria) (criteria and bases in the SAR) (conditions of the construction permit) or to establish the adequacy of the (structure) (system) (component) to perform its intended safety function.

Explanation (items B.1-B.4) CEB's response (see attached copy) indicates that the use of G-43 tolerances are within specification, concurs with QA procedures and are adequate for plate size inspection. CEB has stated that the subject deviation is not significant from a design perspective and that they have evaluated the "worst-case" as constructed condition with to find that the increased stress on anchor bolts is not significant. Also, there has been no deviation from performance specs

C1. Does the affected unit(s) have a CP? (X)Yes ( )No
2. Does the affected unit(s) have an OL? ( )Yes (X)No

D. Are there implications to other matters not included on the NCR or to other plants?

Although the deviation applies to SQN and later plants (BEN was not built under G-43), CEB has indicated that there are no safety implications to any TVA plant.

E. Basis of reportability statement:

Since item A (~~is~~) (is not) affirmative and/or item B (~~is~~) (is not) affirmative, the condition (~~is~~) (is not) reportable under 10CFR50.5(e).

FMTCFR.50

Supersedes NEB840224 218

DETERMINATION OF REPORTABILITY
10CFR21 WORKSHEET

Plant WBN & Later Item Number CD3-S-84-0055-D01

Title Design Basis For Dimensional Tolerances on Structural Steel Plates

NLS Engr RARowe Date 3/15/84 NLS Supv [signature] Date 3/15/84 [signature] 3/21/84

10CFR.21 Applicability - Yes ( ) , - No (X). (See Section XI.1)

I. Identification

Complete each of the following four statements and give a basis for each.

1. The item ~~(is)~~ (is not) a failure to comply with the amended Atomic Energy Act of 1954, 10CFR, SNML, OL, ASLB ruling or other _____ (Sec. 21.1(a)) Basis: No failure to comply occurred

2. This item ~~(is)~~ (is not) a component manufactured or produced offsite by others: motor, relay, cable, instrument, rack, pump, valve, support, vessel, design, analysis, test results, evaluation, or _____ Description: see Item 2.3. . Sec. 21.3(a)(d)(1)

3. This item (is) (~~is not~~) a portion of the facility constructed or produced onsite by TVA or others: building, housing, enclosure, vessel, system, earthwork, support, foundation, or other _____. Description: Item involves the design basis for dimensional tolerances on structural steel plates .(Sec. 21.3.(d)(3)

4. This item ~~(is)~~ (is not) a circumstance or condition that could contribute to a violation of the plant technical specifications. Basis: Technical specification exist - Yes ( ), -No (X) .(Sec. 21.3.(d)(4))

If the response to one or more of numbers I.1-4 is affirmative, go to sections II-V respectively until each section is completed then go to sections VI through X.

N/A

II. Failure to Comply

1. Identify the specific noncompliance indicated in I.1. _____

_____

_____

_____.

(Sec. 21.1(a))

Background and/or explanation _____

_____

_____

_____

_____

_____

_____.

N/A

III. Component (manufactured or produced offsite)

1. The component is (hardware) (software). Deficiency Description: _____

_____

_____

_____

_____ _____.(Sec. 21.3(a))

2. There (is) (is not) a departure from the technical requirements in a procurement document. Explanation: _____

_____

_____

_____

_____.(Sec. 21.3(c))

3. The component (has) (has not) been (delivered into TVA possession, hardware) (officially transmitted to TVA, software). (Sec. 21.3(d)(2))

4. The component (has) (has not) been (installed) (used) (operated). (Sec. 21.3(d)(2))

IV. Portion of a Facility (constructed or produced on site)

1. Deficiency Description: According to CEB no deficiency in design construction, nor QA documentation exists. G-43 provides adequate tolerances for design and construction of steel plates.

_____.(Sec. 21.3(d)(3))

2. The ~~portions~~ same of the facility constructed by TVA (has) (has not) been transferred to POWER. (Sec. 21.3(d)(3))

N/A

3. The portion of the facility constructed by others (has) (has not) been (installed) (used) (operated). (Sec. 21.3(d)(2))

Supercedes NEB8402242 8

V. Tech Spec Violation

1. The operating License ~~(has)~~ (has not) been issued. (Sec. 21.2(d)(4))

VI. Summary

1. The condition ~~(does)~~ (does not) involve a failure to comply, potential technical specification violation or deficiency within the meaning of 10CFR21. Affirmative if and only if one or more of the following sequences are all affirmative.
   ~~(a)~~ I.1
   ~~(b)~~ I.2, III.2, and III.3
   ~~(c)~~ I.2, III.2, and III.4
   ~~(d)~~ I.3, IV.3
   ~~(e)~~ I.4, V.1

VII. Substantial Safety Hazard

The condition ~~(does)~~ (does not) involve a substantial safety hazard (affirmative if and only if the response to one or more of sections VII.1 through 3 is affirmative).

1. The condition ~~(does)~~ (does not) involve (an actual moderate exposure to) (release of) licensed material. Basis: No licensed material was involved.

2. The condition ~~(does)~~ (does not) involve a major deficiency involving (design) (construction) (inspection) (test) (use) of licensed facilities or material. Basis: No licensed facilities were involved.

3. The condition ~~(does)~~ (does not) involve a major degradation of or deficiencies in essential safety-related systems, structures, or components. Basis: CEB has evaluated the subject deviation and has found that there are no safety implications. "Worst-case" stress situations have been evaluated and have been found to provide no significant increase in stresses on the plates nor the bolts. Tolerances in G-13 have been found to be within acceptable limits for plate designs. For CEB's conclusion see attached copy of CEB84 03 19 004.

VIII. 10CFR50.55(e) Reportability

1. This item has been determined ~~(to be)~~ (not to be) reportable and reported under 10CFR50.55(e). If the item has been reported under 10CFR50.55(e), give the day of reporting N/A.

   (Sec. 21.11(b)(1))

IX. Adequate Reporting

N/A

1. The condition (has) (has not) been adequately reported.
   Basis: Initial call made to NRC-OIE (N/A) on / /.

X. 10CFR21 Reportability

1. This condition ~~(is)~~ (is not) separately reportable by TVA under 10CFR21. (Affirmative if and only if items VI and VII are both affirmative and item IX is negative).

XI. 10CFR21 Applicability

1. This condition ~~(is)~~ (is not) applicable under 10CFR21. (Affirmative if and only if item VI and VII are both affirmative.)

N/A

2. The vendor, supplying the component or portion of the facility, ~~(is)~~ (is not) to be notified of this condition for consideration of reporting generic implications to NRC under 10CFR21 (specifically 10CFR21.21(b)(3)(VI)). (Required only if item XI.1 is affirmative.)

N/A

3. The written report to NRC filed under 10CFR50.55(e) ~~(is)~~ (is not) required to contain the information listed under 10CFR21.21(b)(3). (Required only it item XI.1 is affirmative. Note - see listing of 10CFR21.21.21(b)(3) requirements below.)

4. Notification of this condition ~~(is)~~ (is not) required to be sent to the manager of OEDC. (Required only if item XI.1 is affirmative.)

FMTCFR.21

DEFINITIONS

1. Moderate Exposure - radiation doses due to exposure to licensed material or its fission products exceeding (0.5 mrem in unrestricted areas) (25 mrem to plant personnel).

2. Release - radioactive material has been released to an unrestricted area in excess of 500 times the limits of Appendix B, Table II, 10CFR20.

3. Major Deficiency - conditions or circumstances exist which, under normal operating conditions or anticipated transient, could contribute to exceeding a safety limit or cause an accident and could result in a moderate exposure.

4. Major Degradation - conditions or circumstances exist which, under normal operating conditions or accident conditions due to other causes, and in conjunction with an independent single, active failure, could have resulted in both a failure to perform a safety function and a moderate exposure.

5. 10CFR21.21(b)(3) Requirements:

(3) The written report required by this paragraph shall include, but need not be limited to, the following information, to the extent known:
(i) Name and address of the individual or individuals informing the Commission.
(ii) Identification of the facility, the activity, or the basic component supplied for such facility or such activity within the United States which fails to comply or contains a defect.
(iii) Identification of the firm constructing the facility or supplying the basic component which fails to comply or contains a defect.
(iv) Nature of the defect or failure to comply and the safety hazard which is created or could be created by such defect or failure to comply.
(v) The date on which the information of such defect or failure to comply was obtained.
(vi) In the case of a basic component which contains a defect or fails to comply, the number and location of all such components in use at, supplied for, or being supplied for one or more facilities or activities subject to the regulations in this part.
(vii) The corrective action which has been, is being, or will be taken; the name of the individual or organization responsible for the action; and the length of time that has been or will be taken to complete the action.
(viii) Any advice related to the defect or failure to comply about the facility, activity, or basic component that has been, is being, or will be given to purchasers or licensees.

3/17 pm

UNITED STATES GOVERNMENT

Memorandum

TENNESSEE VALLEY AUTHORITY

CEB'840319 004

TO : J. W. Anderson, Manager of Quality Assurance, M155G MIB-K

FROM : R. W. Cantrell, Manager of Engineering Design (Acting), W11A9 C-K

DATE : MAR 19 1984

SUBJECT: DEVIATION REPORT CO3-S-84-0055-D01 - SPECIFICATION FOR FABRICATION, ERECTION, AND INSPECTION OF STRUCTURAL AND MISCELLANEOUS STEEL

Reference: R. W. Dibeler's memorandum to me dated February 15, 1984 (CQA 840215 601)

We have evaluated the subject deviation report as transmitted by the referenced memorandum and our comments are as shown below.

1. TVA General Construction Specification G-43, "Support and Installation of Piping Systems in Category I Structures," specifies plate fabrication tolerances that exceed the standard mill practice given in the American Institute of Steel Construction (AISC) Manual (7th and 8th Editions). Watts Bar Nuclear Plant (WBN) Quality Control Procedure QCP-4.23-8, "Support Final Inspection," includes the fabrication tolerances for plates that are shown in G-43 under the section entitled "Acceptance Criteria." It states that the fabrication tolerances are to be as shown except where specific tolerances are shown on EN DES approved documents.

   It should be noted, however, that the tolerances given in the AISC Manual represent tolerances for measuring and cutting plate steel at the mills. The AISC specification does not address specific tolerances on plate size for fabrication of designed plates. Thus, plate size tolerances can be established as required, considering economics of fabrication and installation, provided these tolerances are considered in the design of the plate.

2. We have completed an evaluation of the effect of the tolerances in G-43 which would allow a reduction in the plate size and which would cause a subsequent increase in the stresses in the bolts as denoted by the subject deviation report. While the stresses in the anchor would increase, our evaluation of the "worst-case" condition considering maximum bending moment (represented generally by a cantilevered support) reflects that the maximum possible reduction in plate size could increase anchor bolt stresses by approximately 10 percent. This does not represent a significant increase in stresses in the plate or the bolt and is within acceptable limits of our designs.

J. W. Anderson

MAR 19 1984

DEVIATION REPORT CO3-S-84-0055-D01 - SPECIFICATION FOR FABRICATION, ERECTION, AND INSPECTION OF STRUCTURAL AND MISCELLANEOUS STEEL

In summary, we do not view the concerns of the subject deviation report as significant from a design perspective, and thus the tolerances in G-43 which would allow a reduction in plate size are acceptable for our plate designs.

R. W. Cantrell

ROB:MGM:EDM:TT

cc: R. O. Barnett, W9D224 C-K (2)
C. Bonine, E7B24 C-K
L. J. Cooney, W6D224 C-K
R. M. Hodges, 1117 IBM-K
J. A. Raulston, W10C126 C-K
R. M. Pierce, 104 ESTA-K
J. C. Standifer, 204 GB-K
F. A. Stone, 304 ESTC-K
G. Wadewitz, Watts Bar Nuclear CONST (3)
MEDS, W5B63 C-K

Principally Prepared By: M. G. Maxwell, Extension 2090, and E. D. Mysinger, Extension 2308

024067.07

DEVIATION REPORT OQA840215650

Office of Quality Assurance	Audit ☐	Deviation Report No.: [illegible]
	Surveillance ☐	Date of Identification: [illegible]
	Review ☒	Type: [illegible]
		Key: [illegible]

Organization: EN DES

840221X0099 (3)

Location: Watts Bar Nuclear Plant

Activity: Fabrication, Erection, and Inspection of Structural & Misc. Steel

Lead OQA Branch/Staff: Construction Quality Assurance Branch

Requirement(s): 10CFR50 Appendix B Criterion III, Design Control states:

Measures shall be established to assure that applicable regulatory requirements and the design basis, as defined in para. 50.2 and as specified in the license application, for these structures, systems, and components to which this appendix applies are correctly translated into specifications, drawings, procedures, and instructions. . . .

(See Continuation Sheet)

1. Deviation:

Failure to provide the design basis for ranges of values (tolerances) chosen for controlling construction.

Summary:

TVA Construction Specification for Support and Installation of Piping Systems in Category I Structures, G-43, R-0 states in section 2.9.1:

(See Continuation Sheet)

Request for Corrective Action:

Request EN DES to provide the documentation of justification for these tolerances.

2. Participating Organization Notified to Initiate Reportability Processing:

☒ Yes ☐ No

Cognizant Evaluator: C. Thomas Findley Date: 2/15/84

QIS Analyst: _____ Date: _____

Participating Oranization/Representative:

Note: This deviation has been discussed with the participating organization representative and it is acknowledged that a deviation has been identified but is not necessarily agreed with.

Signature of Originator: C. Thomas Findley Date: 2/15/84

Concurrence/Approval Signature: William [illegible] Date: 2-15-84

Page 1 of ___

TVA 30500 (OQA-7-83) Sheet 1

Deviation Report No.: 021-S-84-0035-001 Type: I

3. Response to the Request for Corrective Action:

A. Reason for Deviation: (Root Cause) ☐ Required ☐ Not Required

B. Action Taken/Proposed to Correct the Deviation:

☐ Specific ☐ Generic

C. Action Taken to Prevent Recurrence: ☐ Required ☐ Not Required

D. Date Action will be Complete:

E. Was this Deviation Determined to be Reportable? ☐ Yes ☐ No

Type of Report(s) made: _____

Report No.: _____

Signature of Organization's Representative: _____

Telephone No.: _____ Date: _____

TVA 30500 (OQA-7-83) 1 2

DEVIATION REPORT

Office of Quality Assurance	Continuation Page	Deviation Report No.:	CQ3-S-84-0055-D01
		Type:	1

Section No.	Item
	Requirements continued: Paragraph 50.2 states: "Design basis means that information which identifies the specific functions to be performed by a structure, system, or component of a facility, and the specific values or ranges of values chosen for controlling parameters as reference bounds for design." Deviation Summary continued: Plates Specified Size — Dimensional Tolerance 0 x 0" to 12" x 12" — ±½" 12" x 12" to 24" x 24" — ±1" 24" x 24" and larger — ±1½" No documented justification for these tolerances could be produced by EN DES, OQA, or Construction personnel contacted. Therefore, the G spec is not in accordance with the requirements of 10CFR50. Additional Background: FSAR, WBNP, 3.8.4.2 states...design and construction of Category I structures...are based on appropriate sections of the following codes, standards, and specifications. AISC 'Specification for the Design, Fabrication, and Erection of Structural Steel for Buildings'...which states under Standard Mill Practice for Rectangular Sheared Plates and Universal Mill Plates, that the permissible variation under specified width and length is ¼". No specific guide for plate tolerances other than Standard Mill Practice could be found in AISC. However, it is unclear how a milled plate could differ from a shop fabricated plate relative to design.
1	

DIVISION OF ENGINEERING DESIGN
NONCONFORMANCE REPORT

MEDS Accession No. CEB '841015 021

1 REPORT NO. WBNCEB8419

2 PLANT Watts Bar Nuclear Plant	3 UNIT 1 and 2
4 PREPARER/ORGANIZATION/DATE R. O. Hernandez/CEB/10-9-84	8504160369

5a DESCRIPTION OF CONDITION

EN DES drawing series 47A050 includes several tolerances for the location of concrete anchorages, movement of attachments, and the modification of baseplates for supports. The cumulative effects of these tolerances may result in significant increases in baseplate stresses and anchor bolt loads. There is no evidence that these potential increases due to cumulative effects were considered in the design of the various supports.

5b SYSTEM Various 5c VENDOR NAME — 5d CONTRACT NO. --

6 DATE OF OCCURRENCE EST (X), ACT. ( )	9 SIGNIFICANT CONDITION ADVERSE TO QUALITY YES [X] NO [ ]
7 METHOD OF DISCOVER. Design Review	10 *BRANCH CHIEF/DATE 10/15/84
8 UNID CODE (EN DES-EP 8.01)	

11a CORRECTIVE ACTION:

See Attachment

11b SCHEDULED DATE OF COMPLETION: 12/14/84

12 CORRECTIVE ACTION DEVIATES FROM A DESIGN CRITERIA REQUIREMENT YES [ ] NO [X]

13 DESIGN CRITERIA DOCUMENT NO. EXCEPTION REQUEST NO.

14 ECN REQUIRED [ ] YES [X] NO ECN NO. 15 SCHEDULE IMPACT [ ] P [ ] A [X] N

TVA 10700 (EN DES-12/83)

NONCONFORMANCE REPORT

[1] REPORT NO. WBNCEB8419

[16] ASSIGNABLE CAUSE: (REQUIRED IF SIGNIFICANT)

Until 1984, baseplates at WBN were generally analyzed as rigid plates when many of the plates do not meet the present requirements for rigidity. (This deficiency is covered by NCR WBNCEB8402). The tolerances given in the 47A050 notes were probably evaluated based on rigid plate assumptions. The effects of the field tolerances on the bolt loads and baseplate stresses would be smaller for rigid plates than flexible plates. However, no documentation can be found to show that the cumulative effects of the construction tolerances on bolt loads and baseplate stresses were considered in the development of the 47A050 notes.

[17] POTENTIAL GENERIC CONDITION REVIEW REQUIRED (EN DES-EP 1.52) YES [X] NO [ ]

[18a] ACTION REQUIRED TO PREVENT RECURRENCE: (REQUIRED IF SIGNIFICANT)

1. Revise 47A050 notes to assure that field changes to baseplates do not result in unacceptable increases in baseplate stresses or anchor bolt loads.

2. Revise Civil Design Standard DS-C1.7.1 to require amplification of calculated anchor bolt loads and baseplate stresses to account for field tolerances.

3. Conduct a training course to instruct designers in the methods for consideration of baseplate tolerances in the design or evaluation of supports.

[18b] SCHEDULED DATE OF COMPLETION: 12/14/84

[19] INDEPENDENT REVIEW: Ronnie Williams 11/2/84 [illegible]

[20] LABOR EST. ( ); ACT. ( ) MH | [21] SCHEDULE EST. ( ), ACT. ( ) DAYS

[22] ACTIVITY NO.	[23] TASK DESCRIPTION	[24] DATE INITIATED

[25] REMARKS

This NCR is superseded by WBNCEB8419 R1, MEDS accession number CEB 841231 003.

[27] DISTRIBUTION:

[29]
CONST PROJECT MANAGER
EN DES PROJECT MANAGER
CHIEF, ESB
OFFICE OF QA DIMS, SL26 C-K
~~MEDS GIS~~
EN DES MANAGER (for significant NCRs)
NEB (for Significant NCRs)**
NSRS (for Significant NCRs)

*DISTRIBUTE AFTER THIS SIGNATURE
** HANDCARRY COPY TO NEB-NLS

[26] ALL EN DES ACTION COMPLETE:

R O Barnett JAE 4-10-85
*BRANCH CHIEF/ORG. DATE

B41 '850410 008
MEDS ACCESSION NO.

Attachment

Corrective Action

The 47A050 notes provide Construction with several tolerances for fabrication of baseplates and installation of anchor bolts. These tolerances were primarily given to allow Construction to resolve problems with interference of expansion anchor bolts with reinforcing steel.

Preliminary analyses indicate that for some plates, the cumulative effect of these tolerances could result in increases in baseplate stress of about 150 percent and increases in anchor bolt load of about 50 percent. The primary tolerances resulting in the large increases in loads or stresses are:

1. The tolerance on location of the attachment made to the baseplate,

2. The tolerance on the location of the anchors,

3. The fabrication tolerance that allows increasing the size of the baseplate with corresponding tolerances on the location of the anchors in the enlarged plate, and

4. The fabrication tolerance that allows the addition of a plate extension on the baseplate to allow movement of a single bolt.

Since these tolerances are given on engineering drawings, Construction was not required to inform engineering of the change to the plate configuration.

Although large increases in bolt loads or baseplate stresses are possible, the acceptability of the supports may not be impaired. First, the calculated loads and stresses for most supports are much less than the allowable maximums. Secondly, Construction has probably not used the worst case cumulative tolerances on very many plates, and if the worst case tolerances have been used on a few plates, the loading on these plates is likely to be less than the maximum allowable.

In order to determine the acceptability of installed baseplates and anchor bolts, a sampling program will be used to determine if the worst case cumulative tolerances have been used for supports which have anchor loads or plate stresses near their maximum allowables.

The sample of 495 pipe supports used for evaluation of NRC Bulletin 79-02 will also be used for evaluation of the construction tolerances. The following procedure will be used.

1. Evaluate each support in the sample to account for the effects of plate flexibilty on the anchor bolt loads and baseplate stresses.

2. Apply conservative amplification factors to anchor bolt loads and plate stresses to account for field installation and fabrication tolerances. Calculate expansion anchor factors of safety and plate stresses.

Corrective Action (continued)

3. For baseplates where amplification reduces the factors of safety or increase plate stress to an unacceptable level, obtain a field sketch of the baseplate to determine the actual use of tolerances.

4. Recalculate anchor bolt loads and plate stresses based on the actual installed configuration.

The results of the sample will be acceptable if the proportion of supports with expansion anchor factors of safety less than 5 or with plate stresses greater than the allowable is less than 5 percent with 95 percent confidence.

TVA 64 (OS-9-63) (Continuous) L44 841119580

UNITED STATES GOVERNMENT

Memorandum

84 1120 0257

TENNESSEE VALLEY AUTHORITY

NEB '841115 262

pwr
xc: ARMS

TO : L. M. Mills, Manager of Nuclear Licensing, 400 CST2-C

FROM : John A. Raulston, Chief Nuclear Engineer, W10C126 C-K

DATE : NOV 1 5 1984

SUBJECT: WATTS BAR NUCLEAR PLANT - Units 1 and 2 - Supports May Be Degraded By Use Of Installation Tolerances
10CFR50.55(e) REPORT NO. 1 (INTERIM) - NCR WBNCEB 8419

Attached is our approved report on the subject nonconformance for your forwarding to NRC-OIE Region II. The NRC-OIE Inspector, Paul Fredrickson, was notified initially on Oct. 19, 1984. We expect to supply you with additional information by Dec. 20, 1984 to meet a submittal date to the NRC of Jan. 3, 1985. An advance copy of the attached approved report was sent to Randy Tramer of your staff on NOV 14 1984. We consider 10CFR21 applicable to this nonconformance (Yes ___ No X).

If your staff has any questions on this matter, have them contact Jim Worthy, who is the contact on this matter for OE.

John A. Raulston

JEWb:JMW
Attachment
cc (Attachment):
J. W. Anderson, 255 SPB-K
D. B. Bowen, W11A8 C-K
R. W. Dibeler, 11-142 SB-K
H. L. Jones, W10D224 C-K
J. R. Lyons, W12D126 C-K
MEDS, W5B63 C-K
R. M. Pierce, 104 ESTA-K
A. W. Rogers, Watts Bar Nuclear OC QA
J. C. Standifer, P-104 SB-K
Guenter Wadewitz, Watts Bar Nuclear OC (3)
* R.O. Burnett W9D224 C-K

re: P-388

RECEIVED
NOV 19 1984
NUCLEAR LICENSING STAFF

*As responsible organization on this subject, please provide approved report input to NEB-NLS, Jim Worthy, by Dec. 14, 1984, in accordance with NEB 810318 268. This request was coordinated with Dennis Stevens on Nov. 7, 1984.

Principally prepared by: JE Worthy, extension 7160
LMMWBN.II

ATTACHMENT
WATTS BAR NUCLEAR PLANT UNITS 1 AND 2
SUPPORTS MAY BE DEGRADED BY USE OF INSTALLATION TOLERANCES
10CFR50.55(e) REPORT NO. 1 (INTERIM)
NCR WBNCEB8419

Description of Deficiency

TVA's drawing series 47A050 notes provide TVA's Office of Construction (OC) with several tolerances for fabrication and modification of baseplates and installation of anchor bolts. These tolerances were primarily given to allow OC to resolve problems with interference of expansion anchor bolts with reinforcing steel. The cumulative effects of the use of these tolerances may result in significant increases in baseplate stresses and anchor bolt loads. There is no evidence that these potential increases due to cumulative effects were considered in the design of the various supports.

Safety Implications

Failure to consider the potential cumulative effects of modifying supports within the approved tolerance envelopes could result in an "as built" support configuration that does not meet design requirements. This condition could result in failure of the affected support(s) under design loads and, therefore, adversely affect the safety of operations of the plant.

Interim Progress

Preliminary analyses indicate that for some plates, the cumulative effect of these tolerances could result in increases in baseplate stress of about 150 percent and increases in anchor bolt load of about 50 percent. The primary tolerances resulting in the large increases in loads or stresses are:

1. The tolerances on location of the attachment made to the baseplate.

2. The tolerance on the location of the anchors.

3. The fabrication tolerance that allows increasing the size of the baseplate with corresponding tolerances on the location of the anchors in the enlarged plate.

4. The fabrication tolerance that allows the addition of a plate extension on the baseplate to allow movement of a single bolt.

Since these tolerances are given on engineering drawings, OC was not required to inform the Office of Engineering (OE) of the change to the plate configuration.

Although large increases in bolt loads or baseplate stresses are possible, the acceptability of the supports may not be impaired. First, the calculated loads and stresses for most supports are much less than the allowable maximums. Secondly, OC has probably not used the worst case cumulative tolerances on very many plates, and if the worst case tolerances have been used on a few plates, the loading on these plates is likely to be less than the maximum allowable.

In order to determine the acceptability of installed baseplates and anchor bolts, a sampling program will be used to determine if the worst case cumulative tolerances have been used for supports which have anchor loads or plate stresses near their maximum allowables.

The sample of 495 pipe supports used for evaluation of NRC Bulletin 79-02 will also be used for evaluation of the construction tolerances. The following procedure will be used.

1. Evaluate each support in the sample to account for the effects of plate flexibility on the anchor bolt load and baseplate stresses.

2. Apply conservative amplification factors to anchor bolt loads and plate stresses to account for field installation and fabrication tolerances. Calculate expansion anchor factors of safety and plate stresses.

3. For baseplates where amplification reduces the factors of safety or increase plate stress to an unacceptable level, obtain a field sketch of the baseplate to determine the actual use of tolerances.

4. Recalculate anchor bolt loads and plate stresses based on the actual installed configuration.

The results of the sample will be acceptable if the proportion of supports with expansion anchor factors of safety less than 5 or with plate stresses greater than the allowable is less than 5 percent with 95-percent confidence.

Work has begun on the sampling program discussed above. A partial list of supports which require sketching of the actual baseplate configuration has been sent to the field. Recommended revisions to the 47A050 notes have been developed and are being reviewed.

TVA will provide a final report on this condition to NRC by January 3, 1985.

JEW 841228/850103 (No)

05 06 01 00522

A27 830527 013

400 Chestnut Street Tower II

May 27, 1983

(3)

WBRD-50-390/82-39, -391/82-36

U.S. Nuclear Regulatory Commission
Region II
Attn: Mr. James P. O'Reilly, Regional Administrator
101 Marietta Street, NW, Suite 2900
Atlanta, Georgia 30303

Dear Mr. O'Reilly:

WATTS BAR NUCLEAR PLANT UNITS 1 AND 2 - POTENTIALLY OVERSTRESSED EMBEDDED PLATES - FINAL REPORT

The subject deficiency was initially reported to NRC-OIE Inspector R. V. Crlenjak on April 12, 1982 in accordance with 10 CFR 50.55(e) as NCR WBN CEB 8203. Interim reports were submitted on May 19, July 13, and October 14, 1982 and April 8, 1983. This deficiency was subsequently expanded to cover Bellefonte, Yellow Creek and Hartsville Nuclear Plants as NCR GEN CEB 8208.

For disposition purposes NCRs WBN CEB 8203 (WBRD-50-390/82-39, WBRD-50- 1/82-36) and GEN CEB 8208 (BLRD-50-438/82-67, BLRD-50-439/82-60) are being submitted separately for the Watts Bar and Bellefonte Nuclear Plants respectively. Enclosed is our final report for NCR WBN CEB 8203. Our next submittal on NCR GEN CEB 8208 is expected to be transmitted by June 22, 1983.

If you have any questions, please get in touch with R. H. Shell at FTS 858-2688.

Very truly yours,

TENNESSEE VALLEY AUTHORITY

L. M. Mills, Manager
Nuclear Licensing

Enclosure
cc (Enclosure):
Mr. Richard C. DeYoung, Director
Office of Inspection and Enforcement
U.S. Nuclear Regulatory Commission
Washington, D.C. 20555

Records Center
Institute of Nuclear Power Operations
1100 Circle 75 Parkway, Suite 1500
Atlanta, GA 30339

8306010048 3pp.

U.S. Nuclear Regulatory Commission May 27, 1983

TWRS:DRB:VAY
cc (Enclosure):

NRMS, 630 CST2-C	R. L. Lumpkin, 401 UBB-C (2)
J. W. Anderson, M155G MTB-K	*J. A. Raulston, W10C126 C-K
H. N. Culver, 249A HBB-K	H. S. Sanger, Jr., E11B33 C-K
H. J. Green, 1750 CST2-C	F. A. Szczepanski, 417 UBB-C
T. Heatherly, Watts Bar-NRC	C. Wadewitz, Watts Bar
L. S. Cox, Bellefonte	J. D. Wilcox, Bellefonte-NRC

COORDINATED: OEDC/Prahl

*The content of this submittal was coordinated with J. A. Prahl of your staff on May 26, 1983.

ENCLOSURE

WATTS BAR NUCLEAR PLANT UNITS 1 AND 2
POTENTIALLY OVERSTRESSED EMBEDDED PLATES
NCR WBN CEB 8203
WBRD-50-390/82-39, WBRD-50-391/82-36
10 CFR 50.55(e)
FINAL REPORT

Description of Deficiency

After reviewing Watts Bar nonconformance report (NCR) 3842R, which is being separately reported (WBRD-50-390/82-14, WBRD-50-391/82-14) and concerns positioning of expansion anchors near embedded plates with attachments, TVA recognized that one aspect of this NCR should be reported separately. This separate concern is that multiple supports have been attached to embedded plates throughout the plant without a design review of the embedded plates' capacity. The apparent cause of this potential deficiency is the lack of control procedures and documentation requirements concerning the loading limits of embedded plates.

Safety Implications

TVA's sampling program has determined that no safety concern now exists for multiple supports attached to embedded plates at the Watts Bar Nuclear Plant (WBN). However, if spacing requirements had not been issued (January 1983), continued unregulated attachment of multiple supports used with safety-related piping could have potentially overloaded embedded plates causing failure of the plates and ultimately could have caused failure of safety-related piping thus jeopardizing safe operations of the plant.

Corrective Action

In March 1982, TVA evaluated a sample of 69 embedded plates to determine if support failure could occur. The results of this sample were determined to be acceptable since there were zero failures out of the sample of 69 plates. (A failure rate of 0 in a sample of 69 indicates with a 95 percent confidence level that less than 5 percent of the embedded plates would be subjected to loads that could result in support failure.) However, the inspection did identify one embedded stud stressed to .96 Fy. (Fy represents the tensile yield strength of the stud and TVA's maximum design allowable is .9 Fy). In January 1983, TVA construction forces at WBN implemented interim spacing requirements to control the spacing of future attachments to embedded plates, and then updated the sample taken in March 1982. No additional anchors were found to be overloaded during this update.

WBN Construction Specification N3C-928 has now been issued for locating attachments on embedded plates, and this specification requires design approval of all future attachments to embedded plates that do not meet the specified minimum spacing requirements. Also the support that was determine to have an overloaded stud from the original sample has been modified to reduce the stud load below .9 Fy.

A27 830527 013

500 Chestnut Street Tower II

May 27, 1983

WBRD-50-390/82-39, -391/82-36

U.S. Nuclear Regulatory Commission
Region II
Attn: Mr. James P. O'Reilly, Regional Administrator
101 Marietta Street, NW, Suite 2900
Atlanta, Georgia 30303

8306130379

Dear Mr. O'Reilly:

WATTS BAR NUCLEAR PLANT UNITS 1 AND 2 - POTENTIALLY OVERSTRESSED EMBEDDED PLATES - FINAL REPORT

The subject deficiency was initially reported to NRC-OIE Inspector R. V. Crlenjak on April 12, 1982 in accordance with 10 CFR 50.55(e) as NCR WBN CEB 8203. Interim reports were submitted on May 18, July 13, and October 14, 1982 and April 4, 1983. This deficiency was subsequently expanded to cover Bellefonte, Yellow Creek and Hartsville Nuclear Plants as NCR GEN CEB 8208.

For disposition purposes NCRs WBN CEB 8203 (WBRD-50-390/82-39, WBRD-50-391/82-36) and GEN CEB 8208 (BLRD-50-438/82-67, BLRD-50-439/82-60) are being submitted separately for the Watts Bar and Bellefonte Nuclear Plants respectively. Enclosed is our final report for NCR WBN CEB 8203. Our next submittal on NCR GEN CEB 8208 is expected to be transmitted by June 22, 1983.

If you have any questions, please get in touch with R. H. Shell at FTS 858-2688.

Very truly yours,

TENNESSEE VALLEY AUTHORITY

L. M. Mills, Manager
Nuclear Licensing

Enclosure
cc (Enclosure):
Mr. Richard C. DeYoung, Director
Office of Inspection and Enforcement
U.S. Nuclear Regulatory Commission
Washington, D.C. 20555

Records Center
Institute of Nuclear Power Operations
1100 Circle 75 Parkway, Suite 1500
Atlanta, GA 30339

8306070048 pp

U.S. Nuclear Regulatory Commission May 27, 1983

RHS:DBE:VAY
cc (Enclosure):
ARMS, 640 CST2-C
J. W. Anderson, M155G MIB-K
H. N. Culver, 249A HBB-K
H. J. Green, 1750 CST2-C
T. Heatherly, Watts Bar-NRC
L. S. Cox, Bellefonte
R. L. Lumpkin, 401 UBB-C (2)
*J. A. Raulston, W10C125 C-K
H. S. Sanger, Jr., E11B33 C-K
F. A. Szczepanski, 417 UBB-C
G. Wadewitz, Watts Bar
J. D. Wilcox, Bellefonte-NRC

COORDINATED: OEDC/Prahl

*The content of this submittal was coordinated with J. A. Prahl of your staff on May 26, 1983.

ENCLOSURE

WATTS BAR NUCLEAR PLANT UNITS 1 AND 2
POTENTIALLY OVERSTRESSED EMBEDDED PLATES
NCR WBN CEB 8203
WBRD-50-390/82-39, WBRD-50-391/82-36
10 CFR 50.55(e)
FINAL REPORT

Description of Deficiency

After reviewing Watts Bar nonconformance report (NCR) 3842R, which is being separately reported (WBRD-50-390/82-14, WBRD-50-391/82-14) and concerns positioning of expansion anchors near embedded plates with attachments, TVA recognized that one aspect of this NCR should be reported separately. This separate concern is that multiple supports have been attached to embedded plates throughout the plant without a design review of the embedded plates' capacity. The apparent cause of this potential deficiency is the lack of control procedures and documentation requirements concerning the loading limits of embedded plates.

Safety Implications

TVA's sampling program has determined that no safety concern now exists for multiple supports attached to embedded plates at the Watts Bar Nuclear Plant (WBN). However, if spacing requirements had not been issued (January 1983), continued unregulated attachment of multiple supports used with safety-related piping could have potentially overloaded embedded plates causing failure of the plates and ultimately could have caused failure of safety-related piping thus jeopardizing safe operations of the plant.

Corrective Action

In March 1982, TVA evaluated a sample of 69 embedded plates to determine if support failure could occur. The results of this sample were determined to be acceptable since there were zero failures out of the sample of 69 plates. (A failure rate of 0 in a sample of 69 indicates with a 95 percent confidence level that less than 5 percent of the embedded plates would be subjected to loads that could result in support failure.) However, the inspection did identify one embedded stud stressed to .96 Fy. (Fy represents the tensile yield strength of the stud and TVA's maximum design allowable is .9 Fy). In January 1983, TVA construction forces at WBN implemented interim spacing requirements to control the spacing of future attachments to embedded plates, and then updated the sample taken in March 1982. No additional anchors were found to be overloaded during this update.

WBN Construction Specification N3C-928 has now been issued for locating attachments on embedded plates, and this specification requires design approval of all future attachments to embedded plates that do not meet the specified minimum spacing requirements. Also the support that was determine to have an overloaded stud from the original sample has been modified to reduce the stud load below .9 Fy.

DISTRIBUTION SHEET FOR ENDORSEMENTS

PLANT(s) Watts Bar ITEM NO. WBN CER8203

SUBJECT Potentially Overstressed Embedded Plates

GENERAL NOTE/REFERENCE:

Attachment
cc (Attachment):

	Special Instr.		Special Instr.		Special Instr.
( ) M. N. Bressler	( )	( ) P. G. Ioannides	( )	( ) H. G. O'Brien	( )
( ) R. H. Bryan	( )	( ) G. R. Jessee	( )	( ) L. D. Proctor	( )
( ) T. G. Chapman	( )	( ) R. M. Jessee	( )	(X) John A. Raulston	( )
( ) L. H. Chin	( )	( ) H. L. Jones	( )	( ) C. E. Roberts	( )
( ) R. F. Christie	( )	( ) L. J. Klaes	( )	( ) L. E. Stanford	( )
( ) D. T. Clift	( )	( ) F. A. Koontz	( )	( ) E. R. Taylor	( )
( ) J. F. Cox	( )	( ) L. W. Lau	( )	( ) R. C. Weir	( )
( ) G. E. German	( )	(✓) P. D. Metcalf	( )	( ) D. L. Williams	( )
( ) C. H. Gabbard	( )	( ) H. McConnell	( )	( ) Dan W. Wilson	( )
( ) L. A. Haack	( )	( ) R. S. McKeehan	( )	(✓) Doug W. Wilson	( )
( ) T. E. Haynes	( )	( ) D. L. Michlink	( )	( ) _____	( )

JAR: JUN 02 1983
cc (Attachment):

	Special Instr.			Special Instr.
( ) J. W. Anderson, M155G MIB-K	( )	( )	G. R. Hall, 6204 MIB-K	( )
( ) E. G. Beasley, W12B21 C-K	( )	( )	R. M. Hodges, 1117 IBM-K	( )
( ) W. R. Brown, 102 ESTA-K	( )	(✓)	J. C. Standifer, 204 GB-K	( )
( ) C. Bonine, E7B24 C-K	( )	( )	F. A. Stone, 304 ESTC-K	( )
( ) L. J. Cooney, W6D224 C-K	( )	( )	J. P. Vineyard, 209 GB-K	( )
( ) H. N. Culver, 249A HBB-K	( )			
(✓) MEDS, W5B63 C-K	( )	( )	L. S. Cox, BLN CONST (3)	( )
( ) D. W. Mack, E5B60 C-K	( )	( )	W. T. Quinn, HTN CONST (3)	( )
(✓) R. M. Pierce, 104 ESTA-K	( )	( )	C. E. Hale, YCN CONST (3)	( )
( ) M. N. Sprouse, W11A9 C-K	( )	(✓)	G. Wadewitz, WBN CONST (3)	( )
(✓) R. O. Barnett, W9D224 C-K	( )	( )	J. T. Barnes, BLN CONST QA	( )
( ) F. W. Chandler, W8C126 C-K	( )	( )	D. E. Hitchock, 122 MIB-K	( )
( ) C. A. Chandley, W7C126 C-K	( )	( )	A. W. Rogers, WBN CONST QA	( )
( ) J. L. Parris, 116 ESTA-K	( )	( )	_____	( )
( ) R. J. Ogle, W11C68 C-K	( )	( )	_____	( )
( ) R. M. Parker, W4C126 C-K	( )	( )	_____	( )

Special Instructions:

Principally prepared by: J A Prahl, extension 7160

DE03;ENDORS.CG

UNITED STATES
NUCLEAR REGULATORY COMMISSION
REGION II
101 MARIETTA ST., N.W., SUITE 3100
ATLANTA, GEORGIA 30303

JUL 25 1983

830815K0034 (17)

NEB'83 08 02 604

Tennessee Valley Authority
ATTN: Mr. H. G. Parris
Manager of Power
500A Chestnut Street Tower II
Chattanooga, TN 37401

Gentlemen:

SUBJECT: REPORT NOS. 50-390/83-22 AND 50-391/83-16

This refers to the routine safety inspection conducted by Mr. T. L. Heatherly of this office on May 21 - June 20, 1983, of activities authorized by NRC Construction Permit Nos. CPPR-91 and CPPR-92 for the Watts Bar facility and to the discussion of our findings held with Mr. G. Wadewitz, Construction Project Manager, at the conclusion of the inspection.

Areas examined during the inspection and our findings are discussed in the enclosed inspection report. Within these areas, the inspection consisted of selective examinations of procedures and representative records, interviews with personnel, and observations by the inspector.

Within the scope of this inspection, no violations or deviations were disclosed.

We have examined actions you have taken with regard to previously identified enforcement matters and unresolved items. The status of these items is discussed in the enclosed report.

One new unresolved item resulted from this inspection and is discussed in the enclosed report. This item will be examined during subsequent inspections.

In accordance with 10 CFR 2.790(a), a copy of this letter and the enclosure will be placed in the NRC's Public Document Room unless you notify this office, by telephone, within ten days of the date of this letter and submit written application to withhold information contained therein within thirty days of the date of the letter. Such application must be consistent with the requirements of 2.790(b)(1).

Should you have any questions concerning this letter, we will be glad to discuss them with you.

Sincerely,

D. M. Verrelli, Chief
Project Branch 1
Division of Project and
Resident Programs

Enclosure: (See Page 2)

~~8308230523 2pp~~

Enclosure:
Inspection Report Nos. 50-390/83-22
and 50-391/83-16

cc w/encl:
H. J. Green, Director of Nuclear Power
W. T. Cottle, Plant
Superintendent
G. Wadewitz, Project Manager
D. L. Williams, Jr., Supervisor,
Licensing Section
R. E. Teamer, Project Engineer
H. N. Culver, Chief, Nuclear Safety
Review Staff
J. W. Anderson, Manager
Office of Quality Assurance

UNITED STATES
NUCLEAR REGULATORY COMMISSION
REGION II
101 MARIETTA ST., N.W., SUITE 3100
ATLANTA, GEORGIA 30303

Docket Nos.: 50-390/83-22 and 50-391/83-16

Licensee: Tennessee Valley Authority
500A Chestnut Street
Chattanooga, TN 37401

Facility Name: Watts Bar 1 and 2

Docket Nos.: 50-390 and 50-391

License Nos.: CPPR-91 and CPPR-92

Inspection at Watts Bar site near Spring City, Tennessee

Inspectors: L. J. Watson 7/22/83
for T. L. Heatherly, Senior Resident Inspector, Operations — Date Signed

L J Watson 7/22/83
for W. Swan, Senior Resident Inspector, Construction — Date Signed

L J Watson 7/22/83
for S. Butler, Resident Inspector — Date Signed

Approved by: [illegible] 7/22/83
for D. R. Quick, Section Chief — Date Signed
Project Branch No. 1A
Division of Project and Resident Programs

SUMMARY

Inspection on May 21 - June 20, 1983

Areas Inspected

This routine, announced inspection involved 26 inspector-hours on site in the areas of Preoperational Test Review and Witnessing, Independent Inspection, Preoperational Test QA Program, Followup on Licensee Identified Items, Followup on Previous Enforcement Items and Concrete Placement.

Results

Of the five areas inspected, no violations or deviations were identified.

8308230555 14pp.

REPORT DETAILS

1. Persons Contacted

Licensee Employees

G. Wadewitz, Construction Project Manager
W. Cottle, Plant Superintendent
C. Tetton, Construction Superintendent
S. Johnson, Quality Manager
T. Hayes, Nuclear Licensing Unit Supervisor
W. Byrd, Compliance Supervisor Nuclear Power
G. Owens, Nuclear Licensing Engineer.

Other licensee employees contacted included 10 engineers.

2. Exit Interview

The inspection scope and findings were summarized on June 17, 1983, with those persons indicated in paragraph 1 above.

3. Licensee Action on Previous Enforcement Matters

a. (Closed) Violations (390/81-14-01, 02, 03, 04) Failure to Follow Procedure, Inadequate Procedure, Inadequate Training of Test Personnel and Inadequate Test Control Regarding Damage to 1A-A Centrifugal Charging Pump During System Flush. The inspector reviewed the licensee's response to the violations dated December 7, 1981 and January 18, 1982, and the implementation of corrective action. The review included procedure WBNP-QCT-4.36 "General Procedure for Preoperational Cleaning and Flushing of Fluid Handling Systems and Components" and recently completed test packages prepared in accordance with QCT-4.36 and interviews with Startup Test and Coordinator Section Personnel (Division of Construction) and Operations Section personnel (Division of Power). The inspector also reviewed Operations Section Letters OSLA-27 "Assistant Unit Operator Work Stations" and OSLA-28 "Work Station and Equipment Protection Certification" and reviewed selected training files for Assistant Unit Operators. In general it appears that the licensee's stated corrective action was adequate to prevent subsequent violations and continues to be properly implemented.

Additionally the inspector discussed the conduct of the Unit 1 Reactor Coolant System hydrostatic test with the Senior Resident Inspector (see IE Inspection Report 390/81-23). The proper conduct of the test provides additional assurance that the licensee's corrective action to increase construction testing control and Construction/Power interface during testing is effective. These violations are closed.

b. (Closed) Violation (390/82-05-04; 391/82-03-04) Criterion I Failure to Establish and Delineate Authority and Duties. In January 1982, the inspector noted that the construction site quality assurance program had not defined the authority and duties of the units responsible for the transfer of system process within the Construction Engineering Organization (CEO). There was confusion on responsibilities for implementing QA program requirements for the process and effluent radiation monitor cabinet internals. These and other items were cited to demonstrate a failure to clearly establish and delineate authorities and duties for organizations performing activities which were safety related.

In reaction to this citation of violation, the licensee prepared an organization manual section entitled, "TVA Division of Construction - Responsibilities Descriptions - 1982." This volume was issued August 30, 1982. After reviewing this document and holding discussions with site management personnel, the resident inspector concluded that assignment of authority and responsibilities and descriptions of duties were adequate to justify closing the violation. This violation is closed.

Between August 20, 1982 and February 23, 1983, implementation was adequate. Between Feb ry 23, when the site construction organization was expanded and major reallocation of authorities, responsibilities and detailed duties went into effect, and April 7, 1983, the manual descriptions of responsibilities and duties and of the various groups did not match the charted organizational assignments. On April 7, 1983, the Director of Construction issued a new set of descriptions replacing the entire August 20, 1982 manual section. The transmittal memorandum stated "to ensure this document fully meets the responsibility description requirements and actually reflects our organization," a representative from the Industrial Engineering Unit, MSB, would contact M-6 and M-7 site management representatives to arrange reviews with them and appropriate subordinates.

During this inspection period these reviews had not been completed. The site organization charts have been modified and republished monthly through May 31, 1983.

Until the Industrial Engineering Unit reviews are completed and modifications made to adjust for the findings, this matter will be tracked as Unresolved Item 50-390/83-22; 50-391/83-16, Verification That Responsibility Descriptions Agree with Site Organizational Charted Assignments. URI

c. (Closed) Violation (390/83-23-13) Failure to Maintain Storage Controls; RWST. The violation identified a failure to protect safety related instrumentation within the RWST mote. Due to inadequate drainage, rainwater collected and flooded unprotected equipment. The licensee initiated an ECN to modify the drainage system and a Nuclear Power

Section Instruction Letter addition was implemented to require that operators monitor and pump down the mote as necessary to protect equipment. TVA is presently studying methods to better protect equipment which could include moving instrumentation and making further mote modifications. This item is closed.

d. (Closed) Violation (390/82-09-02, 391/82-07-02) Failure to Carry Out An Auditing Program For Nuclear Power Activities. The violation identified that a comprehensive system of planned and periodic audits had not been conducted for fourteen months concerning Division of Nuclear Power (Nuc Pr) activities during the construction and testing phase. In response the licensee stated that they had failed to recognize the extent of related Nuc Pr activities at Watts Bar that required auditing. The licensee commited to resume auditing activities in 1982 and to include Watts Bar in the operation audit schedule. Furthermore, Revision 5, to the TVA Topical Report (TR-75-1) clarified the auditing responsibilities of the Office of Power Quality Assurance and Audit Staff. (Recently reorganized as the Office of Quality Assurance Operations QA Branch.) The inspector reviewed the audit schedule for 1982 and 1983 (partial). The audits appeared to address areas of most important activities concerning Nuc Pr. The audits included turnover programs; corrective actions; nuclear material safeguards; control of special processes; plant maintenance and repair; and plant storage. Based on the inspector's review the licensee appears to be conducting a program of audits that meets the minimum regulatory requirements.

This item is closed.

e. (Closed) Unresolved Item (390/81-13-03) G-43 Requirements. This item identified that Construction Specification G-43 requirements may have inadequately defined steps necessary to preclude equipment damage during construction testing. Specifically, G-43 required adequate deadweight support for flushing and hydrostatically testing systems; however, dynamic forces due to mechanical transients did not appear to be addressed. TVA's position was that G-43 did adequately define steps to preclude damage. Construction forces were required to schedule construction testing such that mechanical transients were not induced or would otherwise violate G-43 requirements. The inspector discussed the implementation of this requirement with Construction Engineering Organization (CEO) managers. The managers stated that construction testing such as the RCS hydrostatic test were thoroughly evaluated prior to running reactor coolant pumps. The inspector concurred with the managers since the inspector had previously reviewed hydrostatic tests prerequisites and found them to be adequate. Concerning flushing water flow forces, the managers stated that in most cases flows were constant or uninterrupted during flushing and the forces generated were minimal when compared to deadweight forces. Identified cases of water hammer were required to be evaluated. One case was known to have existed and had been investigated by CEO. The inspector concurred with the licensee's program.

This item is closed.

f. (Closed) Unresolved Items (390/81-14-10, 391/81-14-01) Stainless Steel Check Valves In DG Air Start System. The inspector discussed the item with Quality Engineering Section personnel and reviewed nonconformance reports NCR W-61-P and NCR W-50-P and correspondence with the DG vendor. The licensee determined that the check valves had been changed to stainless steel without prior design review due to an inadvertent substitution by the vendor. The vendor stated that their quality assurance program had been improved to prevent recurrence and that the stainless steel valves were at least equivalent to the original valves. The air start check valves had previously been determined to be of inadequate design by the licensee's maintenance personnel and they had written a design change request to replace the valves. The site has replaced the valves under their temporary alteration procedure pending final design approval.

This unresolved item is closed.

g. (Closed) Unresolved Item (390/81-16-02) Review of Past Nonconforming Condition Report Dispositions. The Division of Nuclear Power Quality Engineering Group performed a review of all past nonsignificant nonconformances (NCR' o ensure proper notification and disposition. No NCR was found that had not been transmitted and evaluated by the affected organizations. In April 1983, the inspector had performed a similar audit and had determined that the transmittals had been accomplished adequately.

This item is closed.

h. (Closed) Unresolved Item (390/83-14-03) Use of Epoxy Grout On Hanger Installations. The item identified that epoxy resin grout had been specified for use on a safety related pipe support. Response to previous enforcement had indicated that the grout would not be specified for use in environments greater than 120°F.

After investigation by the licensee, it was determined that "intraplast" had been used instead of epoxy grout. Furthermore, the licensee uses a small core of engineers to apply the epoxy grout. Management indicated that these are the only people who are qualified to apply the grout and have been trained in its use. Training has been conducted to ensure that the grout is not applied in environments that exceed 120°F. The inspector found this method acceptable.

This item is closed.

i. (Closed) IFI (390/83-18-02) Arc Strikes. The inspector identified several arc strikes on the main steam header (Loop #1) that appeared to have been made deliberately. Subsequent investigation by the licensee determined that the strikes were probably accidental. Corrective actions included initiation of arc strike removal sheets, wall

thickness readings and NDE examinations. Corrective action was assessed as adequate.

This item is closed.

j. (Closed) Open Item (390/82-22-03; 391/82-18-02) Licensee Review of Design Criteria and CEB-EP-21.28. This item stemmed from a review by the resident inspector of Engineering Design (ENDES) procedure CEB-EP-21.28 "Field Evaluation of the Effects of Postulated Pipe Ruptures" and Design Criteria WB-DC-40-31.50 "Evaluating The Effects of a Pipe Failure Inside and Outside Containment." Possible weaknesses identified included handling of nonconformances; differences in definitions in the two documents; failure to require the Pipe Rupture Evaluation Team (PRET) to evaluate design changes that could affect upcoming field evaluations; failure to require evaluation of environmental interactions within the area of an assumed rupture jet as specified in the design criteria; and a need for evaluation scheduling. The inspector's concerns led to the issuance on May 11, 1983, of Revision 5 to CEB-EP-21.28. This revision covers these areas of concern by revision and enhancement of the following sections: 1.0 Purpose and Scope; 3.0 Definitions; 5.0 Procedure, subsections 5.1.2, 5.2.2, 5.2.4 and 5.2.5; and references 6.10-Regulatory Guide 1.29 and 6.11-EN DES - EP 3.4? "Engineering Evaluations of the Effects of Postulated Pipe Rupture - Work Flow and Responsibilities"; and by the addition of Figure 2, "Pipe Rupture Field Evaluation-Work Flow." The resident inspector reviewed the documentation and concluded that the licensee now has adequate procedures for field evaluations of the effects of postulated pipe rupture.

This item is closed.

k. (Closed) Open Item (390/82-12-02) Time Delay Settings For ERCW Valves. The item identified conflicts between preoperational test procedures, design drawings and licensing documents. Specifically, acceptance criteria for operation and stroke times of Essential Raw Cooling Water (ERCW) System supply valves to the Auxiliary Feedwater System (AFW) were specified differently.

The inspector reviewed Preoperational Test TVA-22 to verify that operating sequences and stroke times were specified. Sequence and timing requirements were defined in Section 5 of the test and acceptance criteria added in Section 6.

This item is closed.

l. (Closed) Open Item (390/82-09-06; 391/82-07-06) Vendor Information Tracking Systems. This item discussed an apparent conflict between specified vendor information and monitored parameters for the diesel generators. The item further discussed that WBNP Nuc Pr had no mechanism to ensure that vendor information, when received, was reviewed and evaluated for plant procedural changes.

The inspector reviewed a recent vendor letter that explained and rectified previous information pertaining to diesel parameters. Site procedure WB 6.3.13 was developed to review and incorporate vendor information into procedures.

This item is closed.

4. Unresolved Items

Unresolved items are matters about which more information is required to determine whether they are acceptable or may involve violations or deviations. A new unresolved item identified during this inspection is discussed in paragraph 3.b.

5. Procedural Review and Test Witnessing - Auxiliary Feedwater System (AFW)

The inspector witnessed a part of preoperational test, TVA-22, Auxiliary Feed Water (AFW). The test involved running the turbine driven AFW pump from auxiliary boiler steam. When the pump was brought up to speed it was noted that one pump bearing oiler ring was not functioning properly. An initial adjustment was performed; however, the oiler ring still did not function properly. The bearing was partially disassembled and subsequent investigation revealed that vendor instructions were unclear on bearing assembly and the oiler would only work with the bearing keeper installed in a certain orientation. The licensee wrote a potentially significant NCR to identify the problem. Since this occurrence was similar in nature to occurrences that had resulted in a charging pump failure and subsequent enforcement (IE Report 390/81-14) for lack of QA controls during operation of safety related equipment, the inspector closely monitored the activities. The group's actions, both their willingness to stop the inprogress evolution to protect equipment and to identify needed corrective actions, was apparent.

Function checks of the AFW steam supply valves were also witnessed and were adequately performed. Procedural steps for both evaluations were well defined. Within the areas inspected, no violations or deviations were identified.

6. Preoperational Test QA Program Review

a. The inspector attended an OQA post audit conference to assess the adequacy of identified findings and the line/QA management interface. The audit was conducted to assess the procurement and storage program within Nuclear Power. The auditors discussed several areas and identified several minor procedural inadequacies for assessment by line managers. No significant violations of the specified QA program were identified. Program effectiveness, while not directly mentioned by the auditors, appeared adequate based upon audit findings. No violations or deviations were identified within the areas inspected.

b. Both inspectors attended a meeting of top WBNP managers conducted by the Manager, CEDC. The manager emphasized his concerns with responsiveness, timeliness, overall quality and ensuring that documentation and physical work were conducted simultaneously. The construction inspector provided a brief review of findings remaining to be addressed prior to Unit 1 licensing.

7. Independent Inspection Effort

The inspectors transmitted generic concerns to the licensee, attended hot functional ceremonies, discussed Essential Raw Cooling Water (ERCW) concerns and witnessed removal of the 2BB diesel generator bearing. Findings were as follows:

a. The inspector transmitted eight potentially generic concerns to the licensee that had been identified as reportable by other utilities. Those concerns were as follows:

(1) Failure of Anchor Darling Globe Valves to Operate. The licensee indicated that several contracts and numerous systems were involved with Anchor Darling valves but that neither mechanical nor electrical post installation checks had revealed operational problems. Preoperational testing had not revealed any deficiencies.

(2) Unacceptable Location of Control Valve Positioners. A review of drawings indicated that WBNP had no problem.

(3) Deficient Brown Boveri Electrical Equipment. Not utilized at WBNP.

(4) Westinghouse Gate Valves - Premature Indication of Closure. WBNP had documented this problem on NCR WBN NEB 8302.

(5) Defective AKR-30 and AKR-50 GE Breakers. Not applicable to WBNP.

(6) Potentially Defective HMA Relays and SBM Switches. Switches manufactured within the specified time frames were not used at WBNP.

(7) Failure of Diesel Generator Holddown Bolts. Discussion with preoperational and operational personnel did not indicate any problem with bolt failure.

(8) NSSS Component Support Steel. Instances had occurred where supplied NSSS support steel had been received but differences had been resolved through the Field Change Request process.

b. The inspector observed removal of the generator from the emergency diesel generator unit and preparations for its shipment to TVA shops at Mussel Shouls. The generator will be dismantled to determine the cause of failure of a main bearing. Site facilities were inadequate for this work.

c. The inspector reviewed correspondence between TVA and NRR concerning stabilization of yard soils between the power blocks and the Tennessee River. The soils may be susceptible to liquifaction during an earthquake. The inspectors held discussions with site management and reviewed charting of conditions already investigated. The remedial work will be inspected as it proceeds.

d. The inspectors attended the ceremonies on March 31, 1983, marking the start of hot functional testing of unit 1 systems. They did not participate in the ceremonies but held discussions with visiting officials covering scheduling, clearance of open items and quality assurance.

8. Concrete Placement

The construction senior resident inspector inspected curing of newly placed concrete in the upper walls of the additional diesel generator building. Curing was found to be adequate and in conformance with requirements. The advisability of use of a formal curing tag (stating the methods and duration of curing and the earliest date and time for removal of forms) instead of verbal instructions by a QC inspector to laborers was discussed with QC supervision.

9. Followup On Licensee Identified Items

a. (Closed) LII (390/81-10-02; 391/81-10-02) Auxiliary Power System Design Item. This item duplicates CDR 390/81-16, 391/81-15 which was reported on September 25, 1980 by the licensee.

This item is closed.

b. (Closed) LII (CDR 390/81-28; CDR 391/81-27) Waiving Source Inspection Without Proper Authority - QA Program Fails To Meet ANSI N 45.2-11: Reportable Deficiencies - Procurement Control Activities. WBRD-50-390/81-28; WBRD-50-391/81-27. Audit M 80-11.

Description of Deficiencies

TVA's Nuclear Safety Review Staff conducted an investigation into the procurement activities conducted by TVA's Division of Engineering Design (EN DES) and reported their findings to the QA manager of the Office of Engineering Design and Construction (OEDC). As a result, the following findings were determined to be significant conditions adverse to quality by the OEDC QA manager.

Deficiency A - The Quality Engineering Branch (QEB) of EN DES certifies its inspector personnel in nondestructive examination. However, QEB personnel have not established the required qualification/certification program for its inspector personnel involved in the inspection of other special process areas.

Deficiency B - QEB inspection reports and accompanying documentation on two contractors were not completed per estalished QA requirements.

Deficiency C - QEB procedures, Inspectors' Manuals, and ANSI 45.2-1971, Section 7 contain contradictory statements regarding the appropriate authority to grant waivers of source inspections.

Deficiency D - A review of TVA documentation did not establish that adequate pre-award activities were conducted with regard to how a supplier intends to meet procurement contract requirements.

Deficiency E - GE and C. F. Braun Company were making STRIDE equipment chan s without providing TVA field personnel with updated and current documents. Note that this deficiency applies only to Hartsville and Phipps Bend Nuclear Plants.

The licensee reports on these matters under CDR 390/81-28 and CDR 391/81-27 have referred to Audit M 80-11 wherein the various deficiencies are numbered rather than having letters as in the listing above. There is no easy cross correlation and the wording of the deficiency items varies somewhat from that above.

Audit Deficiency A cited inadequate procedures to define the qualification/certification program for QEB (Quality Engineering Branch) inspection personnel. QEB Engineering Procedure (EP) 24.40,"RO Certification and Training of QEB Personnel" was issued March 15, 1983 to document detailed requirements for, and fulfillment of training and certification for QEB inspectors by titles and grade. QEB-EP 24.70, "Surveillance Planning" defines the requirements of inspection planning and of surveillance planning. The inspector found that issuance of these documents provides an adequate framework for insuring QEB inspector training and certification.

Audit Deficiency B stated that QEB inspection reports and accompanying documentation on two "problem" vendors were not completed in compliance with established QA requirements. Review of 34 inspection reports involving these vendors identified several deficiencies.

To prevent recurrence, two procedural corrections were made:

a. In EN DES-EP 5.43, R6, "Release of QA Items from Suppliers' Shops to TVA Construction Sites," issued March 25,1982, (ESS 820325 215), instructions have been rewritten to clarify which copies of the final inspection report will be sent to QEB personnel in Knoxville and when these copies will be sent.

b. In QEB-EP 24.56, R1, "Inspection Reports - Preparation, Review, and Distribution," issued July 23, 1982, a procedure was rewritten to clarify the necessity of resident inspectors (at vendor shops) writing an inspection report for each significant contact with a supplier.

The inspector reviewed these procedures and judged that they can clear the concerns.

Audit Deficiency C stated that QEB inspectors were waiving source inspections without proper authority. QEB procedures did not require approval by the requisitions' originating organization to waive inspection.

QEB procedures have been revised to eliminate conflicts involving the waiving of inspection. Engineering procedure EN DES-EP 5.43," Release of QA Items From Suppliers' Shops to Construction Site," Revision 6, dated April 1, 1982, clarifies provisions for waiving source inspection and identifies waivers which require approval of the Technical Engineer. Procedure Section 7.0, "Release of Items Without TVA Inspection Prior To Shipment," details requirements for handling waivers under specified conditions. The TVA Checklist and Shipping Release includes a statement that the inspection was waived and gives special instructions to the Division of Construction when inspection in the field is required.

The inspector reviewed and found acceptable the corrective actions on Deficiency C.

Audit Deficiency D stated that contract pre-award activities did not reveal how the supplier intended to meet procurement contract QA requirements.

The licensee's Final Report dated April 27, 1983, detailed the sequence of revisions to procurement documents and contract review and approval procedures that the inspector believes now clarify the methods used by TVA to assure that a supplier has and can implement an adequate QA-QC program. This clears Deficiency D.

Audit Deficiency E: Not applicable to Watts Bar.

This item is closed.

c. (Closed) LII (CDR 390/80-05; CDR 391/80-05) Seismic Qualification of Control Equipment. On September 22, 1980, the licensee identified that a contract review had revealed that certain control equipment mounted in boxes installed in various safety related systems had not been qualified by seismic tests to design criteria. The scope of the deficiency was limited to two basic types of control equipment manufactured by the Square D Corporation, i.e., selector switch and pushbutton control.

TVA submitted a representative sample (two devices) of the control equipment to Wyle Laboratories for seismic qualification testing. Both tested satisfactorily. TVA designers concluded, on the basis of the test results, that no corrective actions are required on installed similar devices. An NRC Region II electrical systems inspector reviewed the documentation and informed the resident inspector of his concurrence in the licensee's decision.

The resident inspector has also reviewed the documentation and inspected typical installations and identified no cause to disagree.

This item is closed.

d. (Closed) LII (CDR-50-391/82-09) NCR W-69-P Defective 6.9 KV GE Circuit Breaker. The inspector reviewed the licensee's reports dated January 25, March 29, October 14, and December 30, 1982, and March 17, 1983, and NCR W-69-P dated May 11, 1981, which discussed the breaker deficiency and the licensee's review and corrective action. The inspector discussed the deficiency with the Electrical Maintenance foreman and reviewed Maintenance Instruction MI 57.1 "Annual 6.7 KV Switchgear Inspection" which periodically verifies breaker primary contact gap and Maintenance Request MRA-001670 which documented the licensee's check of the primary gap of safety related 6.9 KV breakers.

This item is closed.

e. (Closed) LII (CDR 390/82-32; CDR 391/82-29) Errors in WERCO Program Distributed By AAA Technology. WBRD-50-390/82-32; WBRD-50-391/82-29. NCR WBN CEB 8204. On April 9, 1982, the licensee notified NRC that TVA had made unacceptable use of the WERCO program in evaluating peak stresses on spherical and cylindrical shells.

By Final Report letter dated April 20, 1983, the licensee reported that all analyses utilizing the WERCO program have been reanalyzed and no redesign or facility modifications were required to correct errors made by misapplication of the WERCO program.

The WERCO users manual has been made a controlled document to prevent future misapplication.

The resident inspector has reviewed the documentation and agrees that the matter is not reportable under 50.55(e).

This item is closed.

f. (Closed) LII (CDR 390/82-39; CDR 391/82-26) Potentially Overstressed Embedded Plates. WBRD-50-390/82-39; WBRD-50-391/82-36, NCR WBN CEB 8203. On April 12, 1982, the licensee identified that a potential construction deficiency existed in that multiple supports had been attached to embedded plates without a design review of the embedded plates' loading cpacity.

In March 1982, TVA evaluated a sample of 69 embedded plates to determine if any would fail and none did. This testing gave a confidence level of 95 percent indicating that less than 5 percent of the embedded plates would be subjected to loads that could result in support failure. One embedded stud stressed to .96 Fy. Design allowable Fy (tensile yield strength) is .96.

In January 1983, TVA implemented interim spacing requirements to control spacing of future attachments to embedded plates. Additional sampling identified no additional overloaded anchor.

WBN Construction Specification N3C-928, "Locating Attachments on Embedded Plates," was issued February 10, 1983, and revised June 2, 1983. This specification requires design approval of attachments to existing embedded plates that do not meet the specified spacing requirements.

Additional bracing was added to the support previously determined to have an overloaded stud. The strengthening was done under EDS Nuclear Inc. drawing 1-70-138. Changes to the support were examined by the resident inspector and found acceptable. Concerns under this CDR have been resolved.

This item is closed.

g. (Closed) LII (CDR 50-390/82-91; CDR 50-391/82-87) Solid State Protection System Test Procedures - NCR WBN NEB 8217. The report identified a hardware deficiency in the Solid State Protection System. Specifically system testing could result in a partial or complete failure of a system to achieve its safety function due to slave relays inactuation.

To correct the condition adverse to quality the licensee implemented a procedural change that required the use of a test probe with an indicator lamp connected to ground and to a point between the shunt switch and slave relay. This change ensures that the shunt is restored to allow slave relay actuation. The inspector reviewed the licensee's procedure and assessed it as adequate.

This item is closed.

h. (Open) LII (CDR 50-390/82-42; CDR 50-391/82-39) Qualification of RHR/DHR Sump Valve Rooms. The inspector reviewed the licensee's final report and disagreed with the stated safety implications and corrective actions for the WBNP RHR valve rooms. The inspector's concerns were transmitted to Region II for further evaluation. This item will remain open.

i. (Open) LII (WBRD 50-390/82-84; WBRD 50-391/82-80) Lack of Qualification For Embedded Plates. The report identified that several supports for the Reactor Coolant System and Component Cooling Water System exceeded the allowable loads provided to EDS by TVA. The report also identified a failure to write a nonconformance report for the aforementioned condition.

The inspector reviewed ECN 2958 which was issued to implement corrective actions for the overloaded embedment plates. During a visual inspection, using approved drawings, the inspector noted that an embedment appeared to have more attachments than the drawing indicated. In April 1983 the inspector pointed out the discrepancy to ENDES personnel and asked if a determination could be made to ensure that the plate was adequate to carry out its safety function. On June 16, 1983, the inspector was informed that the plate and drawing differed and that additional attachments had caused the plate studs to become overloaded due to tensile stress. The licensee will nonconform the plate and expand the scope of the report. A supplementary report will be sent to NRC Region II.

j. (Open) TMI (80-RD-03) Shift Manning Requirements 1.A.1.3. The inspector reviewed the Unit 1 draft Technical Specifications, the licensee's response to NUREG 0737 requirements and plant implementing instructions, to assess shift manning. The inspector noted that all requirements appeared to have been implemented within Administrative Instruction (AI)-2.4 except for one NUREG requirement. That requirement stated that an individual should not be required to work more than 14 consecutive days without having 2 consecutive days off. This requirement was not specified in the Technical Specification. This item will remain open until AI-2.4 is updated and until the inspector determines whether the Technical Specification will be updated.

DISTRIBUTION SHEET FOR ENDORSEMENTS

PLANT(s) WBN ITEM NO. 50-390/83-22 + 50-391/83-16

SUBJECT Inspection Report

GENERAL NOTE/REFERENCE:

Attachment cc (Attachment):	Special Instr.		Special Instr.		Special Instr.
( ) M. N. Bressler	( )	( ) P. G. Ioannides	( )	( ) H. G. O'Brien	( )
( ) R. H. Bryan	( )	( ) G. R. Jessee	( )	( ) L. D. Proctor	( )
( ) T. G. Chapman	( )	( ) R. M. Jessee	( )	( )(X) John A. Raulston	( )
( ) L. H. Chin	( )	( ) H. L. Jones	( )	( ) C. E. Roberts	( )
( ) R. F. Christie	( )	( ) L. J. Klaes	( )	( ) L. E. Stanford	( )
( ) D. T. Clift	( )	( ) F. A. Koontz	( )	( ) E. R. Taylor	( )
( ) J. F. Cox	( )	( )( ) L. W. Lau	( )	( )( ) R. C. Weir	( )
( ) G. E. German	( )	(X) P. D. Metcalf	( )	( ) D. L. Williams	( )
( ) C. H. Gabbard	( )	( ) H. McConnell	( )	( ) Dan W. Wilson	( )
( ) L. A. Haack	( )	( ) R. S. McKeehan	( )	( )(X) Doug W. Wilson	( )
( ) T. E. Haynes	( )	( ) D. L. Michlink	( )	( ) _____	( )

(+) Personal Attention

JAR: AUG 02 1983

cc (Attachment):	Special Instr.			Special Instr.
( ) J. W. Anderson, M155G MIB-K	( )	( )	G. R. Hall, 6204 MIB-K	( )
(X) E. G. Beasley, W12B21 C-K	( )	( )	R. M. Hodges, 1117 IBM-K	( )
( ) W. R. Brown, 102 ESTA-K	( )	(X)	J. C. Standifer, 204 GB-K	( )
(X) C. Bonine, E7B24 C-K	( )	( )	F. A. Stone, 304 ESTC-K	( )
(X) L. J. Cooney, W6D224 C-K	( )	( )	J. P. Vineyard, W3D224 C-K	( )
( ) H. N. Culver, 249A HBB-K	( )			
(X) MEDS, W5B63 C-K	( )	( )	L. S. Cox, BLN CONST (3)	( )
(X) D. W. Mack, E5B51 C-K	(+)	( )	W. T. Quinn, HTN CONST (3)	( )
(X) R. M. Pierce, 104 ESTA-K	( )	( )	C. E. Hale, YCN CONST (3)	( )
(X) M. N. Sprouse, W11A9 C-K	( )	(X)	G. Wadewitz, WBN CONST (3)	( )
( ) R. O. Barnett, W9D224 C-K	( )	( )	J. T. Barnes, BLN CONST QA	( )
( ) F. W. Chandler, W8C126 C-K	( )	( )	D. E. Hitchock, 122 MIB-K	( )
( ) C. A. Chandley, W7C126 C-K	( )	(X)	A. W. Rogers, WBN CONST QA	( )
( ) J. L. Parris, 116 ESTA-K	( )	( )	_____	( )
( ) R. J. Ogle, W11C68 C-K	( )	( )	_____	( )
( ) R. M. Parker, W4C126 C-K	( )	( )	_____	( )

Special Instructions:

+ Please note the Unresolved Item on Page 2 (50-390/83-22; 50-391/83-16). It is the understanding of NEB-NLS that your John Nichols will be replying to this item as coordinated with him and George Peck (WBN CONST-NLU) by RA Rowe (NEB-NLS) on August 2, 1983.

Principally prepared by: RA Rowe, extension 7160

ENDORS.CG

ENCLOSURE