WATTS BAR NUCLEAR PLANT

TECHNICAL INSTRUCTION

TI-50A

ASME SECTION XI

PRESERVICE INSPECTION PROGRAM

UNIT 1

CURRENT REVISION LEVEL 14

Prepared By Jeff Goulart

Revised By Jeff Goulart

Submitted By
Inservice Inspection Group Supervisor

FQE Review

PORC Review Date

Approved By
Superintendent

Date Approved

Last page of this instruction: 454

1C	Document Control Unit, 1520 CST2C
1U	NRC
1C	Nuclear Safety Review Staff
1C	Plant Master File
	Plant Superintendent
	Asst. Plant Supt. (Operations)
	Asst. Plant Supt. (Maintenance)
	Adm. Svs. Supervisor
1C	Asst. Mechanical Maint. Sup.
	Chemical Laboratory
	Chemical Unit Supervisor
1C	Chief, Nuclear Training Branch
	Compliance Unit
	DPSO-WBN
	Document Control Supervisor
	Electrical Maint. Supervisor
	Electrical Shop
1C	Engineering Supervisor
1C	Field Services Supervisor
1C	Health Physicist
	Health Physics Laboratory
	Instrument Engineer
1C	Instrument Maint. Supervisor
	Instrument Shop
	Janitor & Labor Supervisor
	Management Svs. Supervisor
1C	Mechanical Maint. Supervisor
1C	Mechanical Unit Supervisor
1U	Operations Supervisor
	OPQA - Plant Coordinator
	Plant Services Supervisor
	Plant Training Officer
1U	Plant Training Shift Engineer
1U	Power Stores Unit Supervisor
	Preop Test Supervisor
	Public Safety
	QA Manager, QA and Audit Staff
2C	Field Quality Engineering Supervisor
	Reactor Unit Supervisor
	Safety Engineer
1C	Shift Engineer's Office
	Stationary Equipment Group
	Technical Support Center
1C	Unit 1 Control Room
1U	Unit 2 Control Room
1U	Regulatory Engineer
1C	Inservice Inspection Group-C
2C	ISI Programs Section-C
1C	NDE Engineering Section-C
1C	NDE Engineering Section-WBNP
1C	NDE Inspection Section-C
1C	NDE Inspection Section-WBNP
1C	DCU-B-WBNP-CONST
1C	ANI

8502070286 850130
PDR ADOCK 05000390
Q PDR

HISTORY OF REVISION/REVIEW

REV. NO.	DATE	REVISED PAGES	REASON FOR CURRENT REVISION (INCLUDE ALL TEMPORARY CHANGE NUMBERS)
12		All	General revision to update program, added support drawings, tables, incorporated temporary changes 83-137, 83-149, and 84-46, removed calibration block drawings, removed reciprocation charging pump drawings and renumbered all pages.
13		Punchlist, Table of Contents, 2-4, 7, 9, 13-19, 21-36, 38, 42-47, 50, 53, 63-65, 87, 93-106, 113, 120-123, 128, 137, 146, 149, 154, 162-164, 170, 171, 178, 181, 185, 188, 189, 191, 264, 270, 276, 288, 292, 315, 316, 320, 325, 327, 334-342, 405, 413-418, 426, 430-432 Added 4a, 15a, 15b, 35a, 82a, 312a, 417a, 417b, 417c, 432a, 432b, 432c, 432d, 433-454	Revised Request for Relief to incorporate NRC comments, added construction examinations of socket welds, incorporated temporary change TC-84-179, minor corrections and clarification, added reciprocation charging pump, added national board numbers.
14		Punchlist, 2, 3, 4, 11, 15a, 19, 22, 23, 29, 30, 32, 34-38, 41, 47, 63, 64, 73-75, 85, 100, 106, 121, 122, 124, 125, 126, 178, 187, 281-342, 401-408, 416, 417, 417a, 417b, 417c, 429, 435-437, 440, 442-445, 454, Added 38a, 312a, 312b, 429a, 429b	Added acceptance ranges for snubber and spring supports, made minor corrections and clarifications, added detail of safe end on steam generator drawing, revised Request for Relief ISI-10.

1. Incorporate Scan Plan Data Upon Completion of PSI, Appendix G

2. Add Appendix F

3. Complete Appendix A

4. Complete Section 6.4.3

Jeffery C Goulart, 11/8/84
Signature Date

This program was prepared to meet the requirements of the 1974 Edition, Summer 1975 Addenda of Section XI of the ASME Boiler and Pressure Vessel Code.

Procedures for eddy current examination of heat exchanger tubing, which the Summer 1975 Addenda of ASME Section XI has no provisions for, meets the requirements of the 1974 Eddition, Summer 1976 Addenda of ASME Section XI. Steam generator tubing examination requirements are in accordance with a modification of Regulatory Guide 1.83, Revision 1.

The following categories shall be in accordance with the 1977 Edition, Summer 1978 Addenda of Section XI:

(1) Criteria for determining Class 1 and 2 pressure-retaining bolting subject to examination

(2) Class 2 valve body weld examinations

(3) Component support integrally welded attachment examinations for piping, pumps, valves and pressure vessels.

(4) Component support examinations for piping, pumps and valves.

(5) Technique for ultrasonic examination of piping welds shall be in accordance with IWA-2232(b) and IWA-2232(c) for examinations performed after 9/16/81. (See Request for Relief ISI-1, ISI-4 and ISI-13)

(6) Standards for examination evaluation of piping welds (IWA-3000) (See Request for Relief ISI-1)

(7) Interior clad surfaces of reactor vessels and other vessels examination are not required.

(8) Reactor vessel interior and core support structure examinations.

The repair and replacement program is in accordance with plant instruction AI-9.15 and DPM No. WB82M1.

The use of code cases N-234, N-235, and N-401 have been approved for TVA use by NRC.

4.0 METHOD OF IMPLEMENTATION AND RESPONSIBILITIES

Preliminary weld maps and other pertinent component drawings and tables are included in Appendix A of this program to define areas subject to examination (in addition to sections 5.0, 6.0, 7.0, and 8.0). The preliminary piping weld maps should be established by ISI Programs Section of the Division of Nuclear Services Inservice Inspection Group from CONST's latest revision weld maps.

Prior to performance of the examinations, each system shall be walked down by the ISI Programs Section to verify that the ISI Programs Section drawings depict field configurations. Any drawing revisions that are necessary as a result of the walkdown will be made before the drawings are included in this program. Also each component drawing shall be reviewed by the responsible ISI Programs Section engineer to ensure that the appropriate information is included on the drawing and shall be approved by the ISI Programs Section supervisor.

The NDE Engineering Section of the Inservice Inspection Group shall prepare scan plans using component drawings for systems or components requiring examinations. The plans shall include as a minimum references to specific welds or components supports to be examined, ASME Code Category, component drawing number, Non-Destructive Examination (NDE) procedures to be used, and calibration block number.

Prior to performing examinations on a system or component, the scan plans shall be established and approved by NDE Level III and submitted by NDE Section to the Plant Manager for information, and system or component weld maps incorporated in Appendix A of this program.

The NDE Section shall notify the authorized inspection agency (AIA) reasonably in advance of when components are scheduled for examination.

If variations in piping configurations are discovered or modifications or repairs to piping are made during the course of the PSI, these changes shall be marked on field copies of drawings. This information shall be communicated to the ISI Programs Section which shall be responsible for revising the original drawings. The NDE Engineering Section scan plan shall also be revised to reflect these changes. Following completion of each system examination, the revised drawings shall be incorporated into this program as a reference for inservice inspections. All latest revision scan plan information and other pertinent information shall be incorporated in this program as a reference for inservice inspections when all examinations required by this program have been completed.

The preservice examinations will be performed by Personnel from either the Inservice Inspection Group, Plant Quality Assurance Staff neering Branch personnel or outside contractors. Contract preparation, administration, and supervision will be the responsibility of the NDE Engineering Section. Inspection plans and/or Quality Assurance Programs submitted by outside contractors shall be reviewed and approved by the Inservice Inspection Group and Division of Quality Assurance, Procurement Evaluation Branch prior to use. All specific NDE procedures used during the inspection program shall be reviewed and approved in accordance with OQAM Part II, Section 6.3.

Certain ASME Section III examinations performed in shop and/or by CONST will be identified by the ISI Programs Section and employed to serve for the ASME Section XI PSI. When in shop examination records are employed, the examination data sheets and the applicable data package form, with the ANI sign-off, shall be obtained by the ISI Programs Section. When CONST examination records are employed, CONST examination procedures

shall be obtained by the NDE Engineering Section for reference (excluding pressure test procedures), and a random sample review of records shall be done by the NDE Engineering Section.

Additionally, the Inservice Inspection Group representative will be responsible for notifying the Plant Manager of all unacceptable indications as soon as practical. Whenever an unacceptable indication is discovered, the procedure and form in Appendix C shall be utilized. In those cases where an outside contractor is furnishing preservice examination services, the contractor will normally initiate the form in Appendix C under the supervision of the Inservice Inspection Group representative. See section 16.0 of this program.

Computer monitor programs are used to identify any welds or supports that have been reworked by CONST after the preservice examination has been done. The plant shall include provisions for notifying inservice inspection group in any work instruction written to modify or rework welds or supports after the preservice examination has been done.

The Inservice Inspection Group shall maintain the status of completed examinations for each weld or component support required to be examined. Individual component status is kept by transferring all the information from the scan plan to a master plan, as examinations are preformed they are recorded in the master plan for status.

As sections are completed, the NDE Inspection Section representative shall sign for completion the appropriate sections of Data Sheet 1 in Appendix B of this program. When all examinations of this program have been completed, Data Sheet 1 shall be signed for completion by the NDE Section representative and reviewed by the NDE Section Supervisor. ISI programs section supervisor, and approved by inservice inspection group supervisor. In the event system or component alterations or repairs are made which require component reexamination, or components are reexamined for other reasons, following sign-off of Data Sheet 1, the appropriate sections of Data Sheet 2 in Appendix B shall be completed and signed by the NDE Section representative.

All preservice examinations shall be completed prior to initial plant startup (Operational Mode 2). Prior to initial plant startup, Data Sheet 2, in addition to Data Sheet 1, in Appendix B shall be signed by the NDE Section representative and reviewed by the NDE Section Supervisor, and the ISI Programs Supervisor, and approved by the Supervisor of the Inservice Inspection Group. After the data sheets 1 and 2 have been approved, the data package cover sheet shall be signed by the Mechanical Branch Chief and the Plant Manager. These data sheets shall be filed at the plant site with PSI examination data and final reports discussed in Section 15.0 of this program.

PSI program preparation is the responsibility of ISI Programs Section. Any revisions initiated by other groups shall be submitted to the ISI Programs Section for approval prior to incorporating the revisions into this program.

6.2.8 Pressurizer Cladding

A clad patch (36 square inches) is in the pressurizer interior cladding near the manway. In accordance with the 1977 Edition, 1978 Addenda of Section XI, no examination is required.

Interior cladding is of austenitic stainless steel.

6.3 Steam Generators (4)

6.3.1 Steam Generator Primary Longitudinal And Circumferential Welds

The primary head-to-tube sheet weld on each generator shall be ultrasonically examined. There are no primary longitudinal welds.

The tube plate is a SA-508, Class 2, steel forging, clad on the primary side with NiCrFe alloy (Inconel). The hemispherical chamber is a SA-216, Gr. WCC, casing, clad with austenitic stainless steel.

6.3.2 Steam Generator Primary Nozzle-To-Head Welds And Inside Radiused Sections

There are no steam generator primary nozzle-to-head welds. The steam generator primary nozzles are integrally cast with the hemispherical chamber.

The nozzles are fabricated to SA-216, Gr. WCC.

6.3.3 Steam Generator Primary Nozzle-To-Safe End Welds

The steam generator primary nozzle-to-safe end welds shall be ultrasonically and liquid penetrant examined.

The nozzles have buttered 308L safe ends.

6.3.4 Steam Generator Primary Pressure-Retaining Bolting Larger Than 2 Inches in Diameter

There is no pressure-retaining bolting larger than 2 inches in diameter.

1-068A-T006-1
-2
-3
-4
-5
-6
-7
-8
-9
-10
-11

1-068A-T011-11
-13
-14

1-068A-T012-1
-2
-3
-4
-5
-6
-8
-9
-10
-11
-12

1-068A-T019-2
-5
-12
-14

1-068A-T020-1
-2
-3
-4
-5
-6
-7
-10
-11

1-068A-T023-2
-4
-5
-6
-11
-12
-13
-17
-19

1-068A-T024-1
-2
-3
-4
-5
-6
-7
-8
-9
-10
-11

1-068A-T030-5

1-068A-T030-6
-10

1-068A-T033-11
-12
-13
-14
-25

1-068A-T034-1
-2
-4
-5
-6
-9
-10
-11
-12

1-068A-T015-11
-12
-14
-36
-37

1-068A-T016-1
-2
-3
-4
-5
-7
-8
-9
-10

1-068B-T001-2
-4A
-9
-10

1-068B-T002-2
-3
-4A
-4B
-6
-7
-8
-9

1-068B-T003-2
-6
-7
-8
-9
-11
-12

1-068B-T004-1A
-1B
-1C
-1D
-1E
-1F
-7
-12

1-062B-T118-1
-2
-4
-5
-7
-10
-19
-21
-22

1-062B-T183-1A
-12
-13
-18

1-062B-T208-5

1-062B-D190-25
-26
-27
-28
-28A
-29

1-062B-T217-26
-1
-2
-3
-5

6.6.6 Valve Bodies

The internal pressure boundary surfaces of one valve in each group of valves of the same constructional design (i.e., globe, gate, check), manufacturing method, and manufacturer that performs similar functions in the system shall be visually examined. The examinations shall include valves exceeding 4-inch nominal pipe size. (See Appendix A, Table D.)

6.7 Exempted Components

All components exempted from examination in accordance with IWB-1220 of ASME Section XI shall be visually examined for leakage during system hydrostatic pressure tests. See Section 9.0. Components exempted from examination include component connections, piping, and associated valves (and their supports) that are 1-inch nominal pipe size and smaller.

7.0 COMPONENTS SUBJECT TO EXAMINATION - ASME CLASS 2

The ASME Class 2 (TVA Safety Class B) components to be examined for the PSI are outlined in the following paragraphs. All components to be examined for inservice inspections during the service life of the plant will be examined for the PSI. Selection of areas for examination will be in accordance with paragraph IWC-2411 and Table IWC-2520 of ASME Section XI. The ISI Programs Section shall select areas to be examined or the NDE Inspection Section may assist in selecting areas to be examined.

Components that are exempted from examination in accordance with IWC-1220 of ASME Section XI are discussed in Section 7.15 of this program.

Class 2 vessels shall not be examined prior to the field hydrostatic tests.

Where examinations specify a percentage of the total length of weld be examined, the area(s) examined shall be physically marked on the component and documented in the examination report. Where a percentage of weld length is not referenced, the entire weld length shall be examined.

When examinations have been completed on the various components, the data sheet(s) in Appendix B shall be completed.

Table B in Appendix A supplies additional information such as reference drawing numbers and ASME Section XI Table-2520 examination categories.

7.3 Regenerative Heat Exchanger (1)-RHX

7.3.1 RHX Circumferential Welds

The regenerative heat exchanger is composed of three heat exchangers interconnected with piping. There are twelve circumferential welds located at structural discontinuities on the heat exchanger. These welds shall be ultrasonically examined. The examinations shall cover at least twenty percent of each weld and shall be uniformly distributed among three areas around the vessel circumference. This examination cannot be done and achieve meaningful results (see Request for Relief ISI-10).

These welds include six channel cylinder section to channel head welds and six channel cylinder section to the tube sheet head welds. The channel cylinder sections are fabricated to SS, SA-351-CF8. The channel heads are fabricated to SS, SA-240-304L. The channel flanges are fabricated to SS, SA-182-F304.

7.3.2 RHX Nozzle-to-Vessel Welds

There are not any nozzles greater than 4 in. diameter. The nozzles are fabricated to SA-479-304 sch 160 material.

7.3.3 RHX Integrally - Welded Supports

There is one integrally welded support (1/4 inch thick) attachment and three lugs (5/8 inch thick) welded to the heat exchanger. The three (5/8 inch thick) lugs per Westinghouse are not functionally required and no credit has been taken for these welds in the analysis of the heat exchanger. Therefore, there is no integrally welded support attachments exceeding 1/2 inch material design thickness.

7.3.4 RHX Pressure Retraining Bolting Exceeding 2 Inches in Diameter

There is not any pressure retaining bolting included with the RHX.

7.4 Letdown Heat Exchanger (1)-LHX

7.4.1 LHX Circumferential Welds

There are two circumferential welds located at structural discontinuities on the tube side. These welds shall be ultrasonically examined. The examinations shall cover at least twenty percent of each weld, uniformly distributed among three areas around the vessel circumference. This examination cannot be uniformly distributed (see Request for Relief ISI-11).

7.4.2 LHX Nozzle-To-Vessel Welds

There are not any nozzles greater than 4 in. diameter. The nozzles are fabricated to SA-312, TP 304.

7.4.3 LHX Integrally-Welded Supports

There are two integrally-welded support attachments (1/2 inch and 3/4 inch thick) on the LHX. Only the 3/4 inch thick support to vessel welds shall be liquid penetrant examined.

The supports are fabricated to SA-240, TP 304.

7.4.4 LHX Pressure Retraining Bolting Exceeding 2 Inches in Diameter

There is no LHX bolting larger than two inches in diameter.

7.5 Excess Letdown Heat Exchanger (1)-ELHX

7.5.1 ELHX Circumferential Welds

There is one circumferential weld located at the structural discontinuity on the heat exchanger. This weld shall be ultrasonically examined. The examination shall cover at least twenty percent of the weld and be uniformly distributed among three areas around the vessel circumference. This examination cannot be uniformly distributed (see Request for Relief ISI-11).

The weld is the channel flange to the channel head weld. The channel flange and the channel head are fabricated to SA105II, F/S and SA-240, TP 304, respectively.

7.5.2 ELHX Nozzle To Vessel Welds

There are not any nozzles greater than 4 in. diameter. The nozzles are fabricated to SA-312, TP 304.

7.5.3 ELHX Integrally-Welded Supports

There are no integrally-welded supports to the tube side of the heat exchanger.

7.5.4 ELHX Pressure Retaining Bolting Exceeding 2 Inches in Diameter

There is no ELHX bolting larger than two inches in diameter.

7.13 CVCS Positive Displacement Pump (Reciprocating Charging Pump) (1) PDP

7.13.1 PDP Casing Welds

The PDP casing does not include any casing welds. The casing is fabricated to SA-182 F304, SA-204 Type 304, SA-479 T304, and SA-479, 410.

7.13.2 PDP Pressure Retaining Bolting Exceeding 2 Inches in Diameter

There is no PDP bolting larger than two inches in diameter.

7.13.3 PDP Integrally-Welded Supports

There are no integrally-welded supports associated with the PDP.

7.13.4 PDP Support Components

The PDP includes a support component bolted to the pump feet which are integrally forged with the pump. The support component shall be visually examined.

7.14 Valves

7.14.1 Valve Body Welds

There are ASME Class 2 valves with body welds. Selection of areas to be examined shall be in accordance with IWC-2411 and Table IWC-2520 of Section XI. These welds shall be surface examined. (See Appendix A Table F.)

7.14.2 Valve Pressure-Retaining Bolting Exceeding 2 Inches in Diameter

There are no ASME Class 2 valve pressure-retaining bolting larger than 2 inches in diameter.

7.14.3 Valve Integrally-Welded Supports

There are no Class 2 valve integrally-welded supports. (See Appendix A, Table F)

7.14.4 Valve Support Components

There are no Class 2 valve support components. (See Appendix A, Table F)

7.15 Exempted Components

All components exempted from examination in accordance with IWC-1220 of ASME Section XI shall be visually examined for leakage during system hydrostatic pressure tests. See Section 9.0 and Appendix A, Table J.

Components exempted from examination include (1) components in systems where both the design pressure and temperature are equal to or less than 275 psig and 200 F, respectively; (2) components in systems or portions of systems, other than emergency core cooling systems, which do not function during normal reactor operation; (3) component connections, piping, and associated valves, and vessels (and their supports), that are 4-inch nominal pipe size and smaller.

8.0 COMPONENTS SUBJECT TO EXAMINATION - ASME CLASS 3 (TVA SAFETY CLASS C AND D)

In accordance with 10CFR50, Section 50.55a(g)(2), a preservice examination of ASME Class 3 components is not required.

8.1 Hydrostatic Pressure Tests

ASME Class 3, components will be visually examined for leakage by CONST during the system hydrostatic pressure tests required by ASME Section III.

8.2 Supports And Hangers

Supports and hangers for components exceeding 4-inch nominal pipe size whose structural integrity is relied upon to withstand design loads when the system function is required, shall be visually examined to detect any loss of support capability, and evidence of inadequate restraint. (See Appendix A, Table C and I)

9.0 HYDROSTATIC PRESSURE TESTS

ASME Class 1, 2, and 3 components (including exempted components) shall be visually examined for leakage during system hydrostatic pressure tests. These examinations shall be performed by CONST during the ASME Section III hydrostatic tests. Additional pressure test shall be performed in accordance with (Program Procedure 1502.08, formerly DPM No. WB 82E1 for NUC PR).

10.0 AUTHORIZED INSPECTOR

TVA shall employ an Authorized Inspector(s) in accordance with ASME Section XI. The Inspector shall verify, assure, or witness that code requirements have been met. He shall have the prerogative and authorization to require requalification of any operator or procedure when he has reason to believe the requirements are not being met. TVA shall provide access for the ANII in accordance with IWA-2140 of ASME Section XI. Requirements for interface with the ANI and ANII are included in OQAM Part II, Section 2.3 and 5.1 respectively.

11.5 Surface Examination (Liquid Penetrant)

Liquid penetrant examination shall be conducted in accordance with Article 6, Section V, of the ASME Code.

11.6 Volumetric Examination (Radiographic)

Radiographic techniques, employing penetrating radiation such as X-rays, gamma rays, or thermalized neutrons, may be utilized with appropriate image recording devices such as photographic film or papers, electrostatic systems, direct-image orthicons, or image converters. For radiographic examinations employing either X-ray equipment or radioactive isotopes and photographic films, the procedure shall be as specified in Article 2, Section V, of the ASME Code.

11.7 Volumetric Examination (Ultrasonic)

Ultrasonic examination shall be conducted in accordance with the provisions of Appendix I of Section XI of the ASME Code. Where Appendix I (I-1200) is not applicable, the provisions of Article 5 of Section V of the ASME Code shall apply except as noted in Section 3.0 of this program.

11.8 Volumetric Examination (Eddy Current)

Eddy current examination of heat exchanger tubing shall be conducted in accordance with the provisions of Appendix IV of Section XI of the ASME Boiler and Pressure Vessel Code (Summer 1976 Addenda).

12.0 QUALIFICATIONS OF NONDESTRUCTIVE EXAMINATION PERSONNEL

Personnel performing nondestructive examination operations shall be qualified in accordance with IWA-2300 of ASME Section XI (Program Procedure 1502.02, Formerly DPM No. N75C01 for NUC PR). Contractor personnel shall possess evidence of certification.

13.0 ACCEPTANCE CRITERIA

All acceptance standards for ASME Class 1 and 2 components shall be in accordance with IWA-3000 of ASME Section XI except where ASME Section III examinations are employed to satisfy ASME Section XI requirements.

14.0 REPAIRS AND REPLACEMENTS

All repairs and replacements shall be performed in accordance with plant instruction AI-9.15 and Program Procedure 1402.02, Formerly DPM No. WB82M1, Preparation of Work Instructions for Repairs and Replacements of ASME Section XI Components, and N-OQAM, Part II, Section 2.3, Repairs and Replacements of ASME Section XI Components. Repairs and replacements as necessary may be coordinated with the Applications Engineering Group of the Mechanical Branch.

15.2 PSI Report for ASME Class 1 and 2 Components

A PSI report(s) for ASME Class 1 and 2 components shall be prepared and submitted to NRC within ninety days after completion of the PSI.

The report shall be prepared by the NDE Section and submitted to the Nuclear Licensing Staff for submittal to NRC.

The PSI report shall have a cover sheet providing the following information:

(1) Date of completion of report

(2) Name of owner and address of corporate offices

(3) Name and address of nuclear generating plant in which the nuclear power unit is located

(4) Name or number assigned to the nuclear power unit by TVA

All reports shall have a summary providing the following information:

(1) National Board Number assigned by the manufacturer to the pressure vessel or component

(2) Names of the components or parts of the components for which this is a record, including such information regarding size, capacity, material, location, and drawings as may aid accurate identification.

(3) Name and address of principal manufacturer and the principal contract number which will identify the subcontractors.

(4) Manufacturer's component identification number

(5) Date of completion of the preservice inspection

(6) Name or names of the Inspector(s) when required

(7) Name and mailing address of the employer(s) of the Inspector(s)

16.0 NOTIFICATION OF INDICATION

Plant management shall be formally notified of the presence of unacceptable indications detected during the performance of nondestructive examinations. Unacceptable indications are defined by the applicable NDE procedure. Formal notification shall consist of completing and submitting to the Plant Manager the "Notification of Indication" form in Appendix C of this program.

Part I of the "Notification of Indication" shall be completed and signed by the NDE Level II or III examiner detecting the indication. The NDE Section representative shall assign a sequential number and review and sign the form. If the indication is detected by an outside contractor, the contractor's field supervisor shall review and sign the form. The original shall be sent to the plant manager and a copy to the ISI Programs Section.

The plant manager or his assistant shall designate the organization (Modifications Group, Plant Maintenance, or the Office of Construction) responsible for preparing a disposition in Part II of the form and performing the associated corrective action. If the organization assigned responsibility for disposition is unable to determine a satisfactory disposition then the form should be sent to the Mechanical Branch for disposition.

The individual responsible for preparation of the disposition shall sign and date Part II of the form. The cognizant supervisor of the appropriate organization shall review and approve the disposition and sign and date Part II of the form. Copies of the form shall be distributed to the plant manager and the ISI Programs Section. The original shall be returned to the NDE Engineering Section Representative. One copy shall be filed with the examination report.

If the organization assigned responsibility for disposition is within NUC PR, they shall determine if the unacceptable condition is significant and potentially reportable in accordance with the requirements of N-OQAM, Part III, Section 7.2 and Plant Instruction AI-7.3. Dispositions to correct the condition under the plant maintenance program shall be processed in accordance with N-OQAM, Part II, Section 2.1 and Plant Instruction AI-9.2. Dispositions other than restoring to original requirements shall be processed as modifications in accordance with N-OQAM, Part II, Section 3.0 and Plant Instruction AI-8.5 before licensing and AI-8.8 after licensing. Repair and replacement, activities, including coordination with the Authorized Inspection Agency (AIA), shall be performed in accordance with the requirements of N-OQAM, Part II, Section 2.3 and Plant Instruction AI-9.15. Dispositions to accept the condition as-is shall include in Part II of the form the basis for the disposition. In addition for dispositions to accept the condition as-is, a USQD shall be prepared by the appropriate organization in accordance with established procedures.

If Construction is responsible for corrective action, it shall be performed in accordance with the disposition on the Notification of Indication form and to the satisfaction of the Inservice Inspection Group representative. The organization responsible for corrective action shall include preservice examination requirements in the repair or replacement work instruction described in N-OQAM, Part II, Section 2.3.

Upon completion of corrective action the Inservice Inspection Group Representative shall verify completion of corrective action, enter the work instruction and/or DCR numbers on the Notification of Indication form, enter the examination report number if re-examination was performed, and sign and date the form, Part III. The signed form shall remain with the examination report for use as a quality assurance record. If reexamination was performed, a copy of the signed form shall also remain with the reexamination report. Copies of the form shall also be distributed to the plant manager and the ISI Programs Section.

17.0 CALIBRATION BLOCKS

Calibration blocks will be used for ultrasonic examinations (a calibration tube will be used for eddy current examination of steam generator tubing). The blocks will be fabricated to the general requirements of ASME Section V and ASME Section XI. The blocks shall be fabricated of the material to be examined or equivalent P numbers. Mill test reports shall be obtained and retained by the NDE Inspection Section for all calibration blocks. The blocks shall employ drilled holes and/or notches for calibration reflectors (see Request For Relief ISI-1).

The NDE Inspection Section shall ensure that as built calibration block drawings are prepared. The calibration block drawings shall be maintained in accordance with N-OQAM, Part III, Section 3.3.

18.0 REQUESTS FOR RELIEF

Where TVA has determined that certain code requirements or examinations are impractical, TVA will submit written requests for relief to NRC with information to support the determinations with any proposed alternate examinations. The impractical code requirements or examinations shall be identified in this program, and references to particular requests for relief shall be included.

When impractical examination requirements are identified in the field, the NDE Inspection Section or NDE Engineering Section shall notify the ISI Programs Section such that the information may be included in this program and requests for relief may be prepared if necessary. The NDE Inspection Section or NDE Engineering Section shall submit sketches to the ISI Programs Section to identify areas which cannot be examined in accordance with code requirements.

20.2.6 Ingersoll-Rand Instruction Manual - Residual Heat Removal Pumps, Contract No. 71C62-54114-1, N3M-2-30.

20.2.7 Watts Bar Nuclear Plant Administrative Instructions AI-3.1, AI-7.3, AI-8.5, AI-8.8, AI-9.2, AI-9.7, and AI-9.15.

20.2.8 Division Procedure Manual N80E3, N75C01, N76A10 and WB82M1.

20.2.9 Quality Assurance Program Procedures 1502.08.

TABLE A
WATTS BAR PRESERVICE INSPECTION PROGRAM - ASME CLASS 1 COMPONENTS

Component	Program Reference Section (See Note 1)	Examination Category Item No. From Table IWB-2600, Section XI	From Table IWB-2600, Section XI	Method of Inspection	Reference Drawing No.
C. Steam Generators					
1. Primary Head-to-Tube Sheet Weld	6.3.1	B3.1	B-B	UT	CH-M-2660-B
2. Primary Nozzle-to-Safe End Welds	6.3.3	B3.3	B-F	UT, PT	CH-M-2660-B
3. Pressure-Retaining Bolting Two Inches and Smaller in Diameter	6.3.5	B7.30 (See Note 2)	B-G-2 (See Note 2)	VT	CH-M-2660-B
4. Tubing	6.3.8	See program reference section 6.3.8.	See program reference section 6.3.8.	ET	N/A
D. Piping					
1. Circumferential Welds	6.4.1	B4.5	B-J	UT	Appendix A, Piping Weld Location Dwgs
2. Longitudinal Welds	6.4.1	B4.5	B-J	UT	Appendix A, Piping Weld Location Dwgs
3. Branch Pipe Connection Welds Exceeding 6" Diameter	6.4.2	B4.6	B-J	UT	Appendix A, Piping Weld Location Dwgs

NOTE: 1. See Section 6.0 for additional information.
2. Item number and examination category from 1977 Edition, 1978 Summer Addenda of Section XI.

TABLE B

WATTS BAR PRESERVICE INSPECTION PROGRAM - ASME CLASS 2 COMPONENTS

	Component	Program Reference Section (See Note 1)	Examination Category Item No. From Table IWB-2600, Section XI	From Table IWB-2600, Section XI	Method of Inspection	Reference Drawing No.
K.	Chemical Volume Control Centrifugal Charging Pump					
	1. Integrally-Welded Supports	7.11.3	C3.70 (See Note 2)	C-C (See Note 2)	PT	ISI-0118-A
	2. Support Components	7.11.4	C3.80 (See Note 2)	C-E (See Note 2)	VT-3	ISI-0018-A
L.	Safety Injection Pumps					
	1. Support Components	7.12.4	C3.80 (See Note 2)	C-E (See Note 2)	VT-3	ISI-0120-A
M.	Chemical Volume Control Positive Displacement Pump					
	1. Support Component	7.13.4	C3.80 (See Note 2)	C-E (See Note 2)	VT-3	ISI-0119-A
N.	Valves					
	1. Valve Body Welds	7.14.1	C6.20 (See Note 2)	C-G (See Note 2)	PT	ISI-0081-A ISI-0082-A
O.	Exempted Components	7.15	N/A	N/A	VT	N/A

NOTES: 1. See Section 7.0 for additional information.
2. Item number and examination category from 1977 Edition, 1978 Summer Addenda of Section XI.

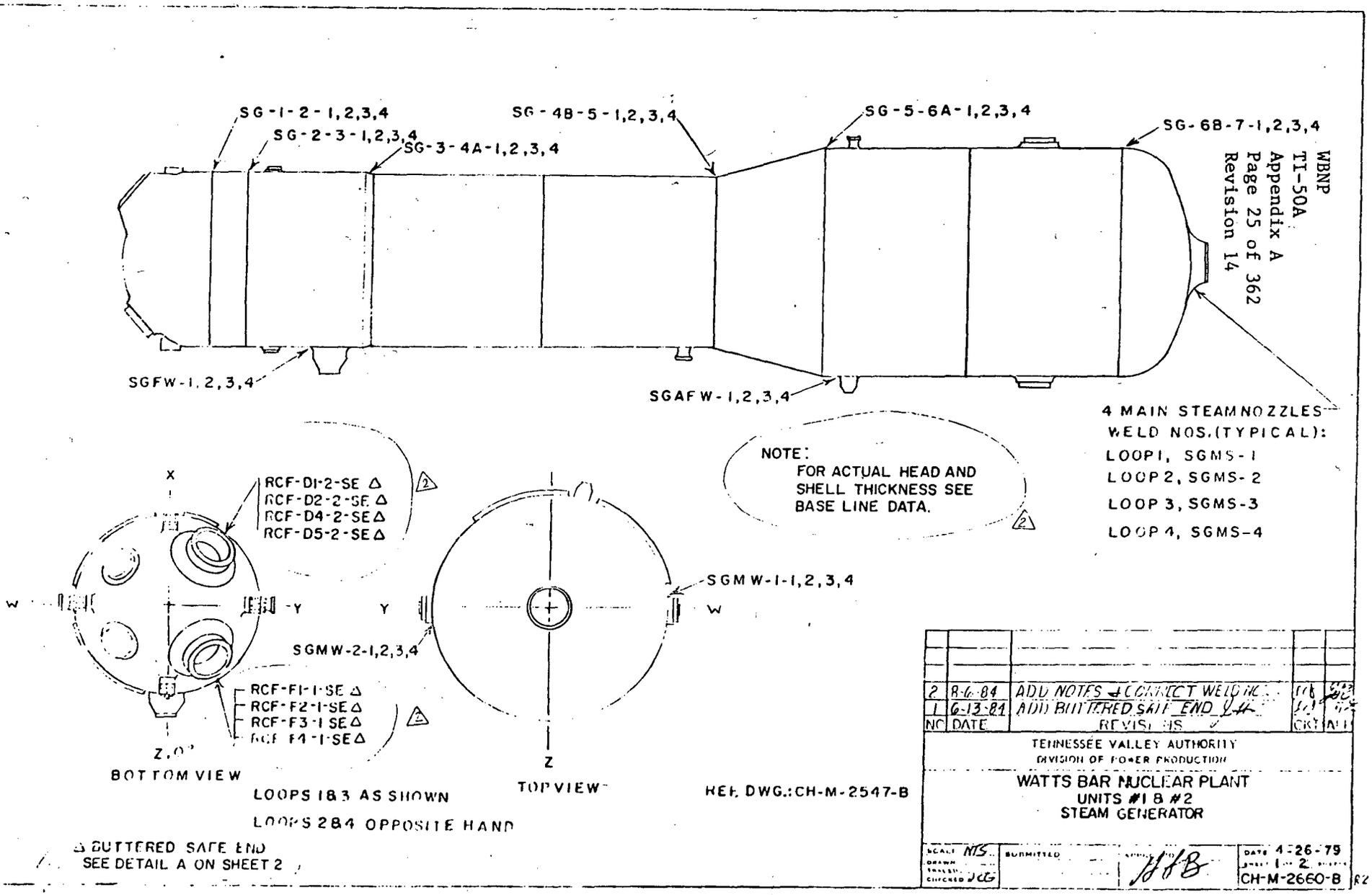
SG-1-2-1,2,3,4
SG-2-3-1,2,3,4
SG-3-4A-1,2,3,4
SG-4B-5-1,2,3,4
SG-5-6A-1,2,3,4
SG-6B-7-1,2,3,4
SGFW-1,2,3,4
SGAFW-1,2,3,4
4 MAIN STEAM NOZZLES
WELD NOS.(TYPICAL):
LOOP 1, SGMS-1
LOOP 2, SGMS-2
LOOP 3, SGMS-3
LOOP 4, SGMS-4
NOTE:
FOR ACTUAL HEAD AND SHELL THICKNESS SEE BASE LINE DATA.
RCF-D1-2-SE Δ
RCF-D2-2-SE Δ
RCF-D4-2-SE Δ
RCF-D5-2-SE Δ
SGMW-1-1,2,3,4
SGMW-2-1,2,3,4
RCF-F1-1-SE Δ
RCF-F2-1-SE Δ
RCF-F3-1-SE Δ
RCF-F4-1-SE Δ
X
W
-Y
Y
W
Z
BOTTOM VIEW
TOP VIEW
LOOPS 1 & 3 AS SHOWN
LOOPS 2 & 4 OPPOSITE HAND
Δ BUTTERED SAFE END
SEE DETAIL A ON SHEET 2
REF. DWG.: CH-M-2547-B
NO DATE REVISIONS CKD APD
2 8-6-84 ADD NOTES & CORRECT WELD NOS.
1 6-13-81 ADD BUTTERED SAFE END
TENNESSEE VALLEY AUTHORITY
DIVISION OF POWER PRODUCTION
WATTS BAR NUCLEAR PLANT
UNITS #1 & #2
STEAM GENERATOR
SCALE NTS
DRAWN
TRACED
CHECKED
SUBMITTED
DATE 4-26-79
SHEET 1 OF 2
CH-M-2660-B

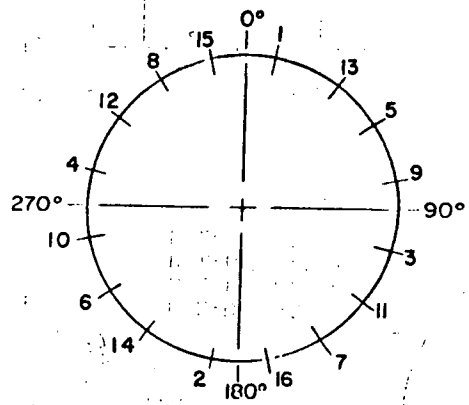

PRIMARY MANWAY BOLTING

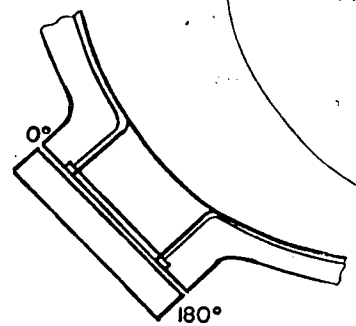

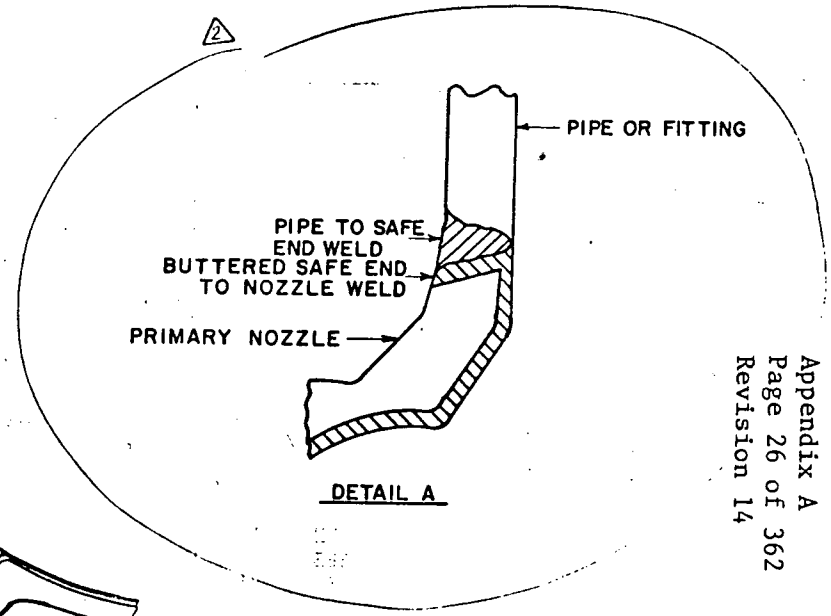

DETAIL A

NO	DATE	REVISIONS	CK'D	APP.
2	8-6-81	ADD DETAIL A		
1	7-13-84	CORRECT BOLT NUMBER SEQUENCE AND DELETED NOTE		

TENNESSEE VALLEY AUTHORITY
DIVISION OF NUCLEAR POWER

WATTS BAR NUCLEAR PLANT
UNITS #1 & #2
STEAM GENERATOR

SCALE NTS
DRAWN
TRACED
CHECKED
SUBMITTED
APPROVED
DATE 1/5/81
SHEET 2 OF 2 SHEET(S)
CH-M-2660-B R2

REFERENCE DRAWINGS
HWE-53167

MATERIAL SPECIFICATIONS
CLASS 2
SHELL
SA 516-71 GR. 70
308 CLADDING
5 5/16" (MIN. THK.) 2
HEADS
SA 516-71 GR. 70
308 CLADDING
2 21/32 MIN THK) 2
SAFE ENDS
SA 182 F 304
1 1/8" THK.
NOZZLES
SA 350 LF 2
SUPPORT SKIRT
SA 516 Gr. 70

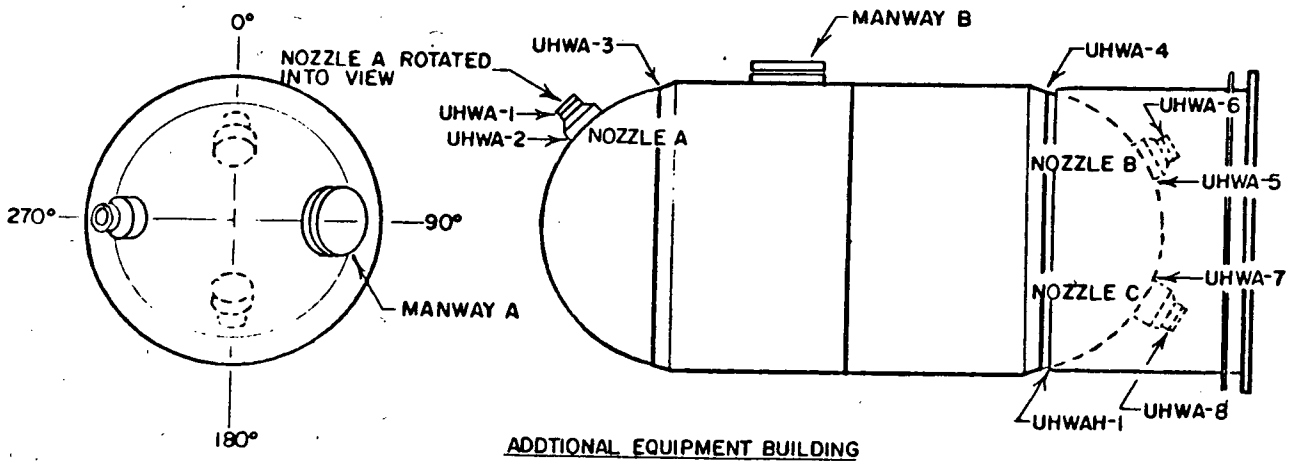

ADDTIONAL EQUIPMENT BUILDING

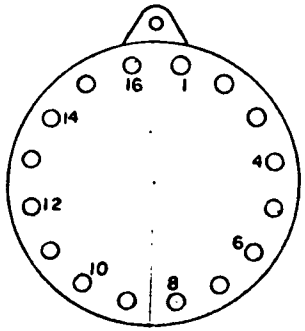

MANWAY

NOTE:
FOR ACTUAL SHELL AND HEAD THICKNESS SEE BASE LINE DATA. 2

WBNP
TI-50A
Appendix A
Page 35 of 362
Revision 14

NO.	DATE	REVISIONS	CK'D	APP.
2	9-19-84	ADD NOTE + CORRECT MAT. SPECS.	RCB	
1	1-19-84	ADDED MANWAY B, MANWAY DESIGNATIONS, AND CHANGED CLASS DESIGNATIONS REV	JCG	

TENNESSEE VALLEY AUTHORITY
DIVISION OF NUCLEAR POWER

WATTS BAR NUCLEAR PLANT
UNITS #1 & #2
UPPER HEAD INJECTION
WATER ACCUMULATOR

SCALE: NTS
DRAWN
TRACED KEV
CHECKED
SUBMITTED
APPROVED
DATE 7-19-82
SHEET OF SHEETS
ISI-0073-B

R2

REFERENCE DRAWINGS

C-4149-1
D-4054-6

MATERIAL SPECIFICATIONS

CLASS 2

HEAD
SA 240 TP 304
.375" THK.

SHELL
SA 240 TP 304
.375" THK.
18" DIA. 2
FLANGE
SA 182 F 304

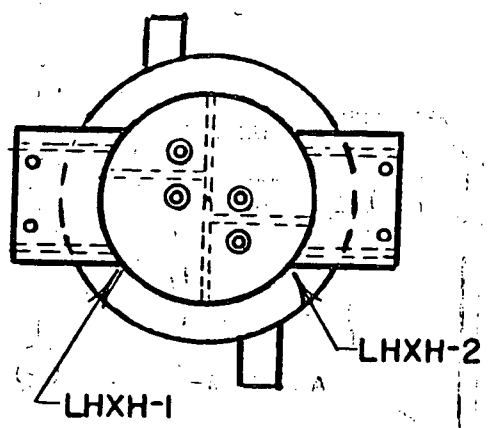

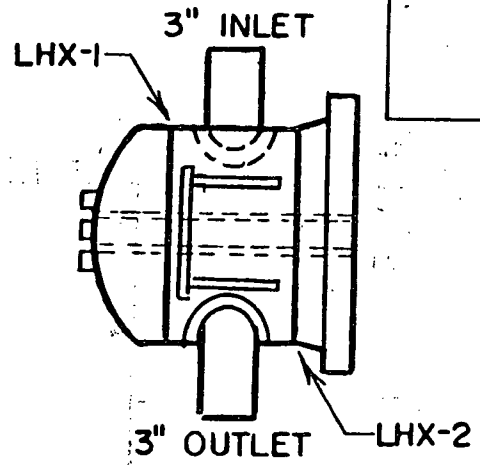

LETDOWN HEAT EXCHANGER
ROOM IA

NO.	DATE	REVISIONS	CK'D	APP.
2	9-7-84	ADD DIA. TO MATERIAL SPECS		
1	1-14-83	CHANGED CLASS DESIGNATION KEV	JCG	

TENNESSEE VALLEY AUTHORITY
DIVISION OF NUCLEAR POWER

WATTS BAR NUCLEAR PLANT
UNITS #1 & #2
LETDOWN HEAT EXCHANGER

SCALE: NTS
DRAWN
TRACED KEV
CHECKED DAD
SUBMITTED DAD
APPROVED
DATE 8-4-82
SHEET 1 OF 1 SHEETS
ISI-0075-A

REFERENCE DRAWINGS

D-4060-6

MATERIAL SPECIFICATIONS

CLASS 2

HEAD

SA 240 TP 304

.750" THK.

9.5" DIA. 2

FLANGE

SA 105 II

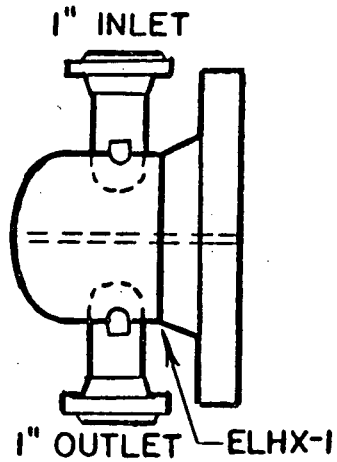

REGENERATIVE AND EXCESS LETDOWN

HEAT EXCHANGER ROOM

NO.	DATE	REVISIONS	CK'D	APP.
2	9-7-84	ADD DIA. TO MATERIAL SPECS		
1	1-14-84	CHANGED CLASS DESIGNATION KEY	JCG	

TENNESSEE VALLEY AUTHORITY

DIVISION OF NUCLEAR POWER

WATTS BAR NUCLEAR PLANT

UNITS #1 & #2

EXCESS LETDOWN HEAT EXCHANGER

SCALE: NTS	SUBMITTED	APPROVED	DATE 8-4-82
DRAWN			SHEET 1 OF 1 SHEETS
TRACED KEY	DAD		ISI-0076-A
CHECKED DAD			

R2

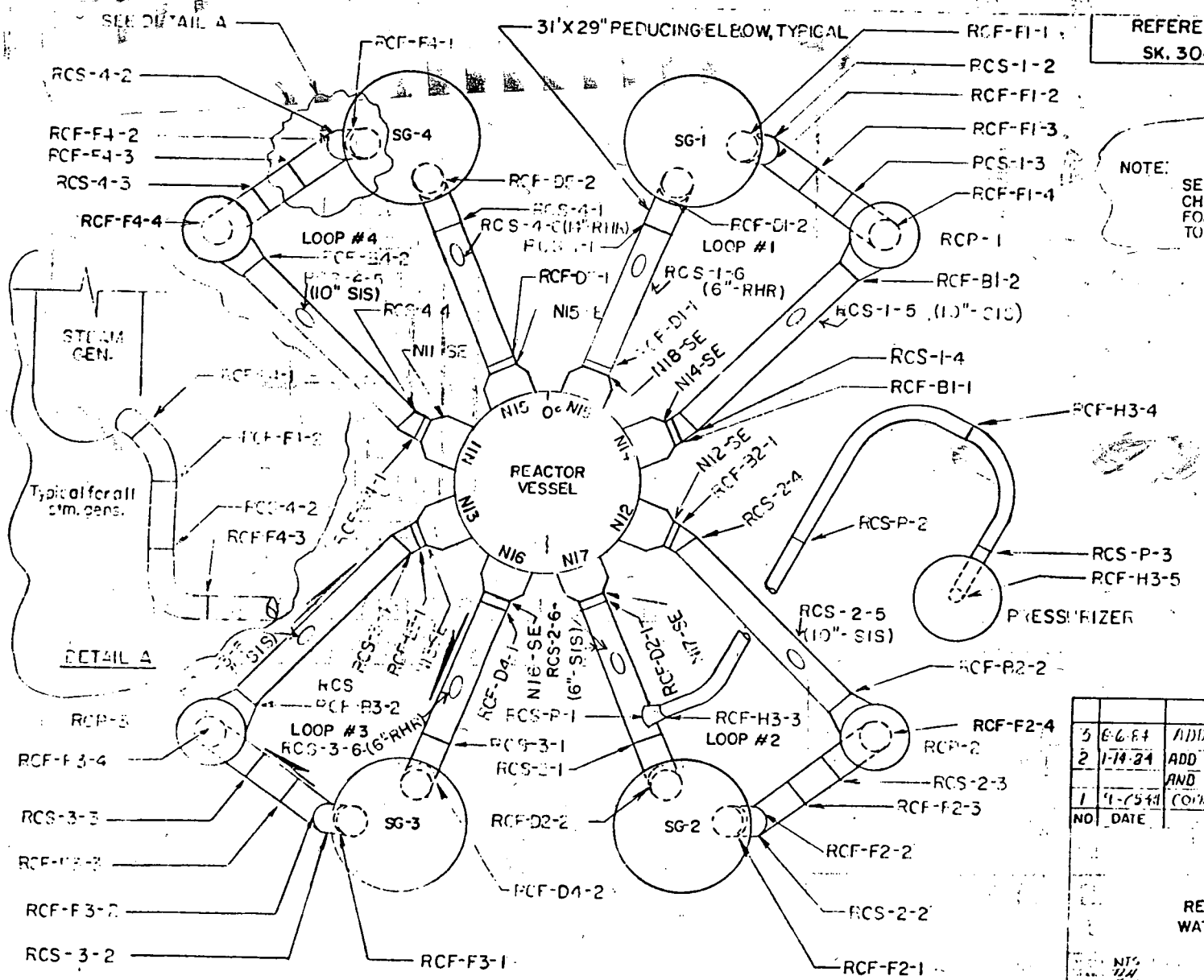

REFERENCE DRAWINGS
SK. 304-1 SHS. 1 THRU 12

NOTE:
SEE DETAIL A ON DWG. CH-M-2660-B, SHEET 2 FOR THE STEAM GENERATOR TO PIPING WELDS

PRESSURIZER SURGE LINE
NOM. PIPE SIZE - 14"
SCH.160 SA-376 SML'S

HOT LEG
29" I.D., 2.33" M.W.
SA-351 CF-8A

CROSS-OVER LEG
31" I.D., 2.48" M.W.
SA-351 CF-8A

COLD LEG
27.5" I.D., 2.21" M.W.
SA-351 CF-8A

NO	DATE	REVISIONS	CK'D	APP.
3	8-6-84	ADD NOTE 3		
2	1-14-84	ADD WELD NO., CORRECT LINE DESIGNATION, AND ADD REF. DWGS.		
1	9-25-83	CORRECT [illegible] AND ADD SHEET 2		

MECHANICAL
REACTOR COOLANT PIPING
WATTS BAR NUCLEAR PLANT
UNIT 1

NTS
DH
KEY

9/27/78
1 2
CH-M-2547-B

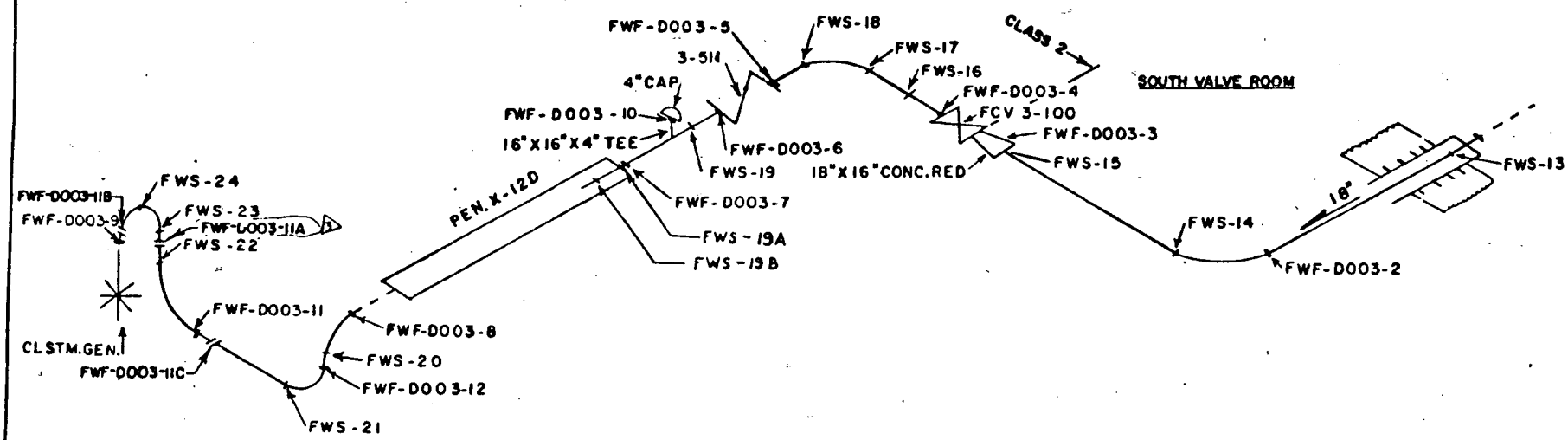

SEE SHEET ONE FOR NOTES

REF DRAWING
WBN E-2879 IC-3

NO.	DATE	REVISIONS	CK'D	APP
3	9-7-84	CORRECTED WELD NO.		
2	6-7-84	CORRECT REF. DRAWING		
1	1-14-84	ADD AND DELETE WELDS, ADD ROOM NAME		
		ADD CLASS BREAK & DELETE REF. DWG.		

TENNESSEE VALLEY AUTHORITY
DIVISION OF POWER PRODUCTION

WBNP
FEEDWATER WELD MAP
UNIT 1 LOOP 4

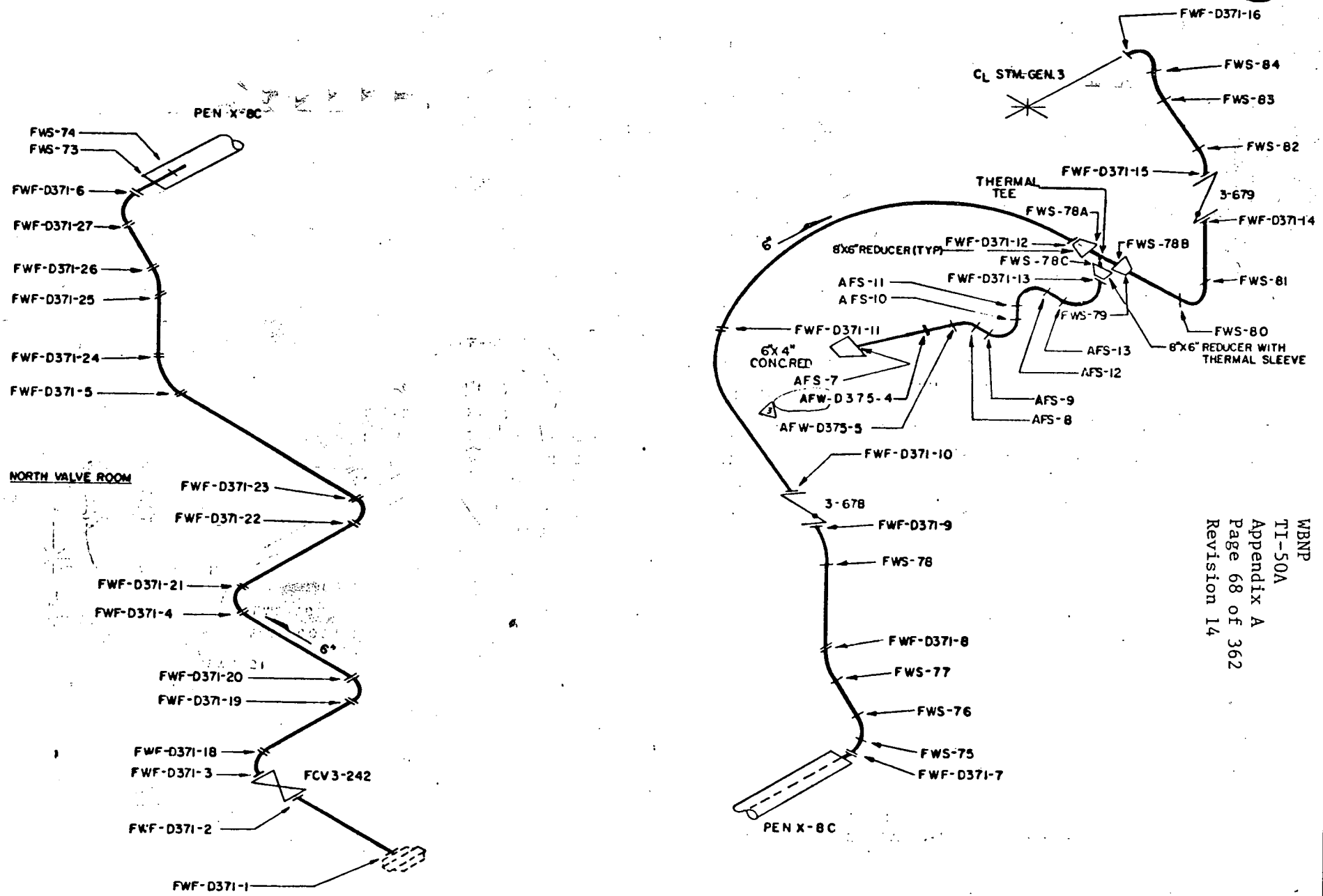

REF. DRAWING
WBN E-2879 IC-371, IC-375

SEE SHEET #5 FOR NOTES

3	7-7-84	CORRECTED WELD NO.		
2	7-15-84	ADD NOTE TO THERMAL TEE AND CORRECT REFERENCE DWG		
1	1-14-84	ADD ROOM NAME & DELETE REF DWG		

TENNESSEE VALLEY AUTHORITY
DIVISION OF POWER PRODUCTION

WBNP
6" FEEDWATER WELD MAP
UNIT 1 LOOP 3

WBNP
TI-50A
Appendix A
Page 68 of 362
Revision 14

REFERENCE DRAWING
WBN E-2879 IC-40 WESTINGHOUSE
WBN E-2879 IC-41 7243 D01

MATERIAL SPECIFICATIONS
CLASS I
PIPE
SA 376 TP-316
8" SCH. 160
8" SCH 140
SA 312 TP 304
5" SCH 140, 0.515" N.W.
FITTINGS
SA 403 WP 316
8" SCH 160
8" SCH 140

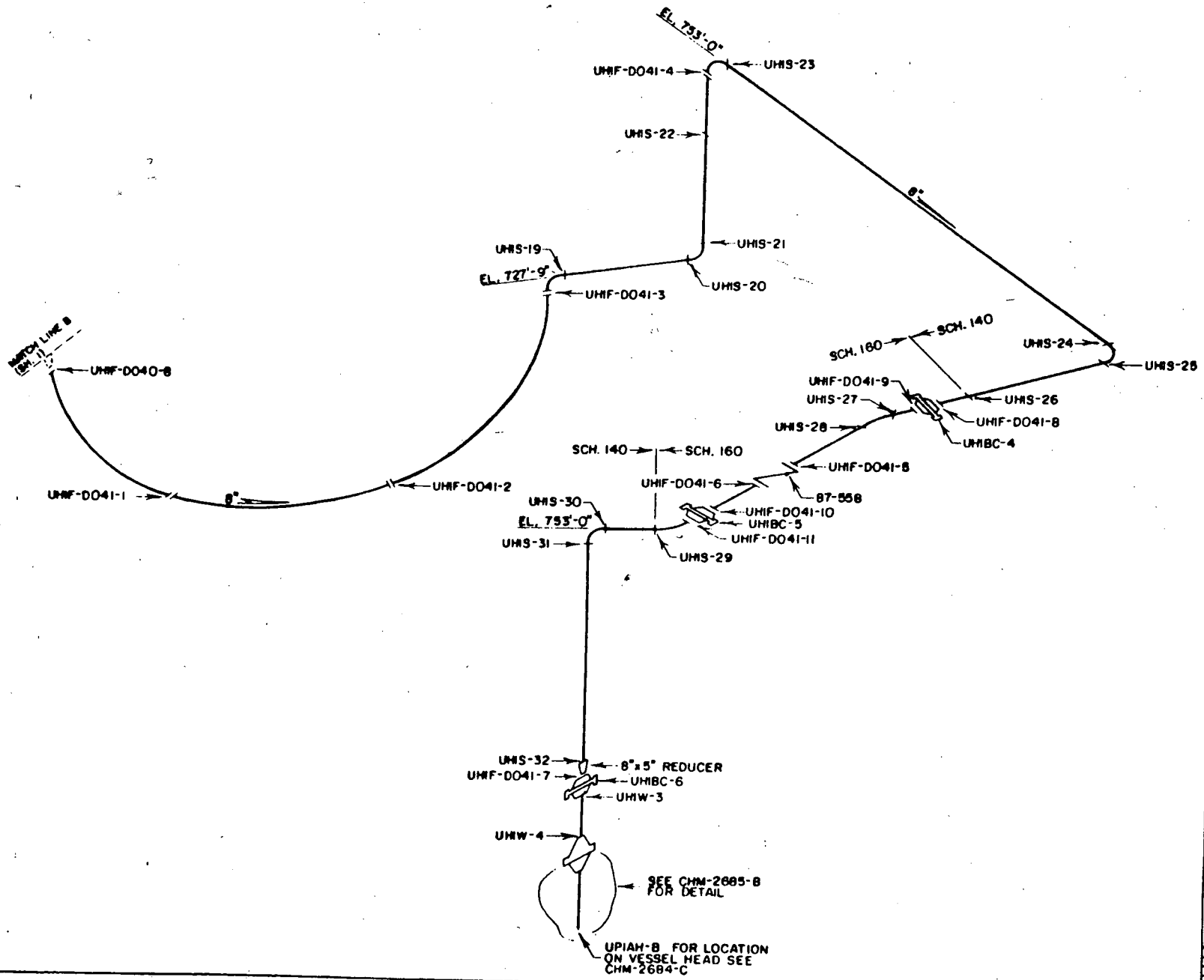

WBNP
TI-50A
Appendix A
Page 83 of 362
Revision 14

NO.	DATE	REVISIONS	CK'D	APP.
5	10-22-84	CORRECTED CLASS DISG		
4	1-7-84	CORRECT MATERIAL CLASS		
3	6-14-84	ADD REF DWG AND CORRECT MATERIAL SPEC'S		
2	1-17-84	REDRAWN & GENERAL REVISION		
1	1-7-82	CORRECT VALVE NUMBER		

TENNESSEE VALLEY AUTHORITY
DIVISION OF NUCLEAR POWER

WATTS BAR NUCLEAR PLANT
UNIT #1
UPPER HEAD INJECTION SYSTEM
WELD LOCATIONS

CHM-2684-C

REFERENCE DRAWINGS
WBN E-2879 IC-42 WESTINGHOUSE
SK. 435-18 SH. 1-2 7243 D01

MATERIAL SPECIFICATIONS
CLASS 1
PIPE
SA 376 TP 316
12" SCH 140
8" SCH 160
8" SCH 140
SA 312 TP 304
5" SCH 140, 0.515" N.W.
SA 376 TP 304
2" SCH 160
FITTINGS
SA 403 WP 316
12" SCH 140
8" SCH 160
8" SCH 140
SA 182 F 304
2" 6000# S.W.
CLASS 2
PIPE
SA 376 TP 316
12" SCH 140
FITTINGS
SA 403 WP 316
12" SCH 140

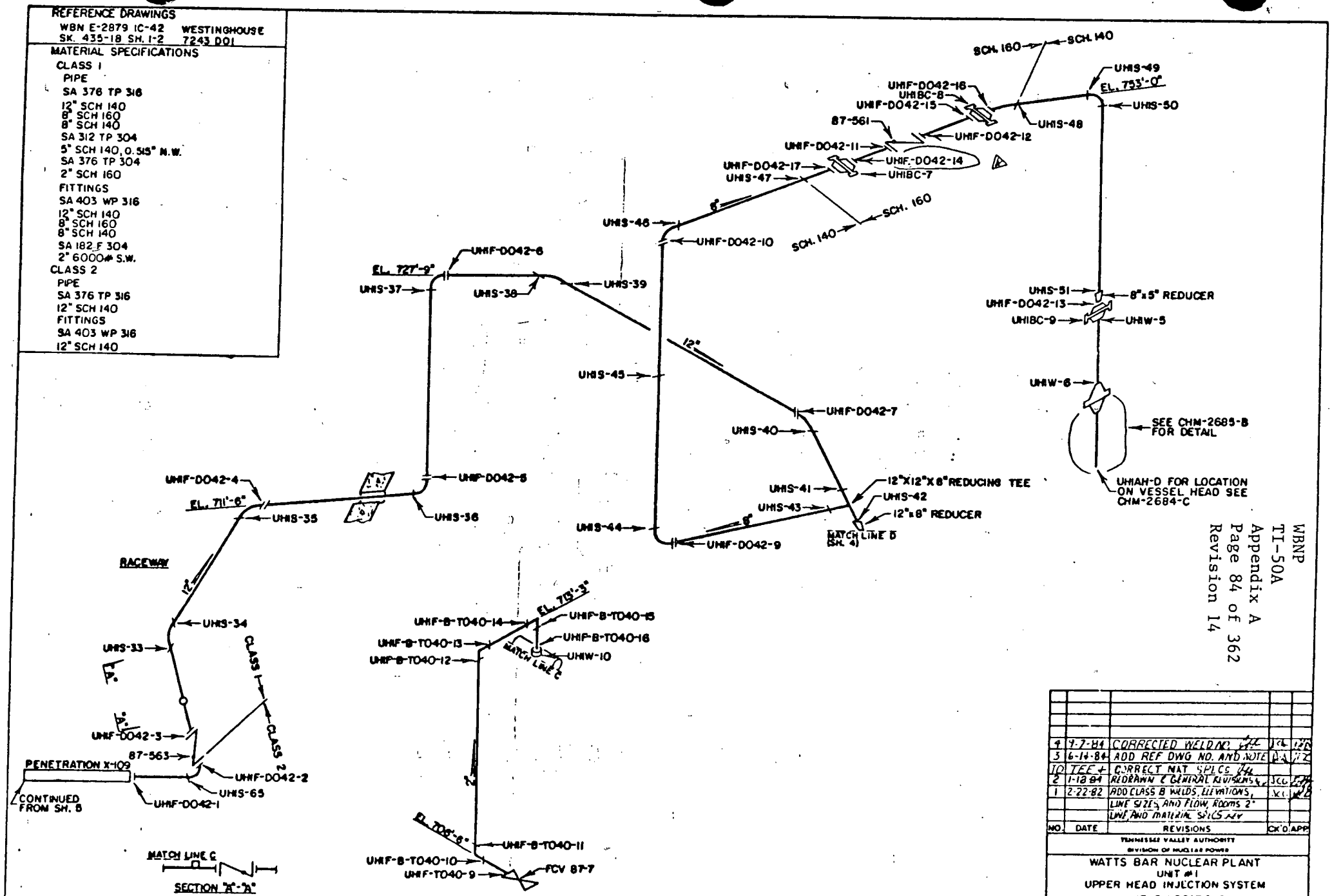

NO.	DATE	REVISIONS	CK'D	APP
4	9-7-84	CORRECTED WELD NO.		
3	6-14-84	ADD REF DWG NO. AND NOTE		
10	TEE +	CORRECT MAT SPECS		
2	1-18-84	REDRAWN & GENERAL REVISIONS		
1	2-22-82	ADD CLASS B WELDS, ELEVATIONS, LINE SIZES, AND FLOW, ROOMS 2" LINE AND MATERIAL SPECS		

TENNESSEE VALLEY AUTHORITY
DIVISION OF NUCLEAR POWER

WATTS BAR NUCLEAR PLANT
UNIT #1
UPPER HEAD INJECTION SYSTEM
WELD LOCATIONS

ISI-0004-C

REFERENCE DRAWINGS
WBN E-2879 KC-38
WBN E-2879 KC-39

MATERIAL SPECIFICATIONS
CLASS 2
PIPE
SA 376 TP 316
12" SCH 140
FITTINGS
SA 403 WP 316
12" SCH 140
FLANGES
SA 182 F 316
12" BORED SCH 140

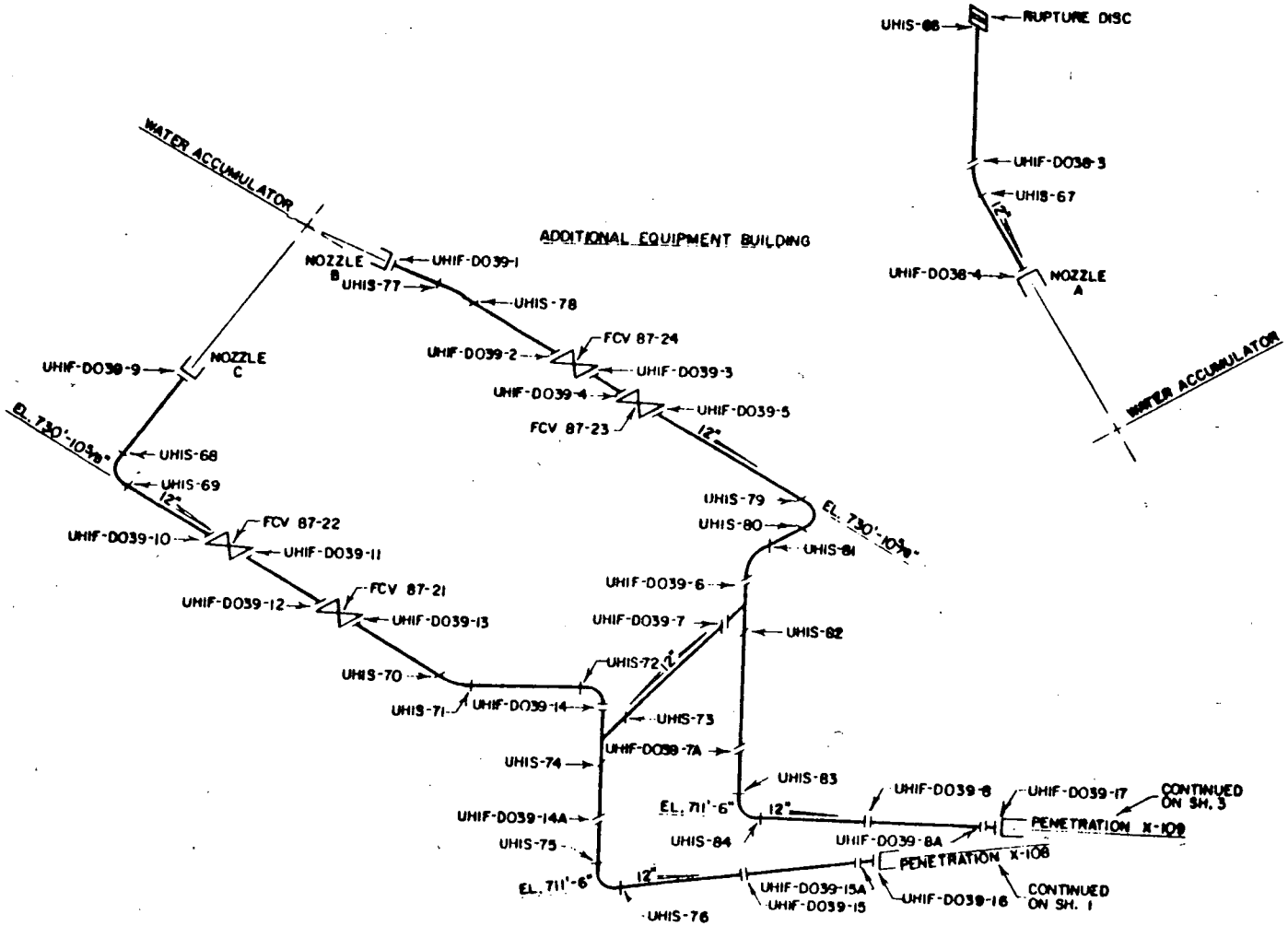

SNDP WELDS UHIS 66 thru UHIS-84

NO.	DATE	REVISIONS	BY	CHK
2	10-22-84	CORRECTED CLASS DISC.		
1	1-19-84	CHANGED CLASS DISCHARGE AND CORRECTED ROOM NAME		

TENNESSEE VALLEY AUTHORITY
DIVISION OF NUCLEAR POWER

WATTS BAR NUCLEAR PLANT
UNIT #1
UPPER HEAD INJECTION SYSTEM
WELD LOCATIONS

SCALE NTS
DRAWN
CHECKED
ISSUED

1BM-0004-C

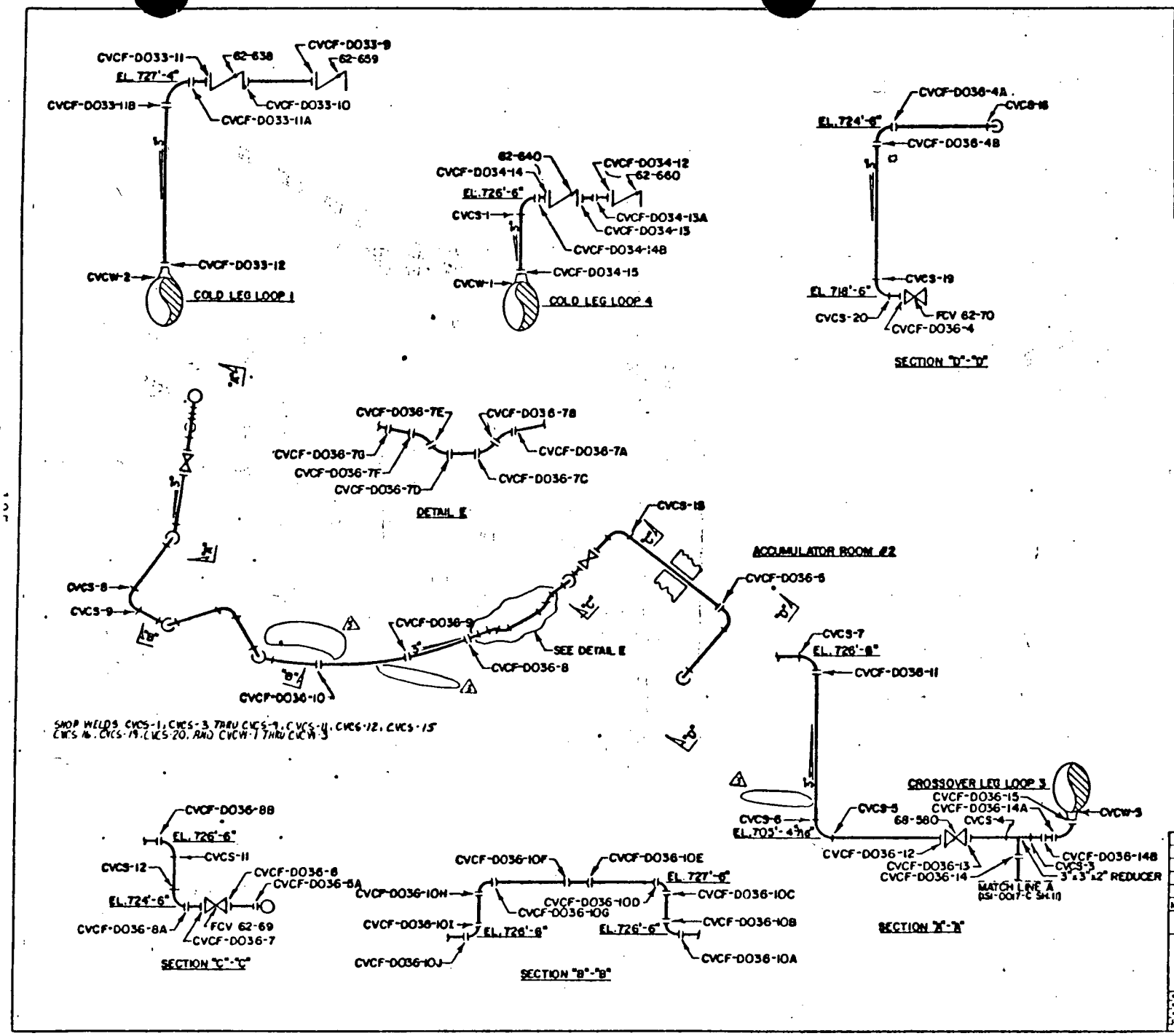
REFERENCE DRAWINGS
WBN-E-2879 IC-33
WBN-E-2879 IC-34
WBN-E-2879 IC-36
MATERIAL SPECIFICATIONS
CLASS I
PIPE
SEAMLESS STAINLESS STEEL
SA 376 TP 304
3" SCH. 160
FITTINGS
SEAMLESS STAINLESS STEEL
SA 403 WP 304
3" SCH. 160
3"x3"x2" TEE SCH. 160
CVCF-D033-11
62-638
CVCF-D033-9
62-659
EL. 727'-4"
CVCF-D033-11B
CVCF-D033-10
CVCF-D033-11A
CVCF-D033-12
CVCW-2
COLD LEG LOOP 1
62-640
CVCF-D034-14
CVCF-D034-12
62-660
EL. 726'-6"
CVCS-1
CVCF-D034-13A
CVCF-D034-13
CVCF-D034-14B
CVCF-D034-15
CVCW-1
COLD LEG LOOP 4
CVCF-D036-4A
CVCS-16
EL. 724'-6"
CVCF-D036-4B
CVCS-19
EL. 718'-6"
CVCS-20
FCV 62-70
CVCF-D036-4
SECTION "D"-"D"
CVCF-D036-7E
CVCF-D036-7B
CVCF-D036-7G
CVCF-D036-7A
CVCF-D036-7F
CVCF-D036-7C
CVCF-D036-7D
DETAIL E
CVCS-18
ACCUMULATOR ROOM #2
CVCF-D036-6
CVCS-8
CVCS-9
CVCF-D036-9
SEE DETAIL E
CVCF-D036-8
CVCF-D036-10
SHOP WELDS CVCS-1, CVCS-3 THRU CVCS-9, CVCS-11, CVCS-12, CVCS-15
CVCS-16, CVCS-19, CVCS-20, AND CVCW-1 THRU CVCW-3
CVCS-7
EL. 726'-8"
CVCF-D036-11
CROSSOVER LEG LOOP 3
CVCF-D036-15
CVCF-D036-14A
CVCW-3
CVCS-5
68-580
CVCS-4
CVCS-6
EL. 705'-4 5/16"
CVCF-D036-12
CVCF-D036-13
CVCF-D036-14
CVCF-D036-14B
CVCS-3
3"x3"x2" REDUCER
MATCH LINE A
(SI-0017-C SH.11)
SECTION "A"-"A"
CVCF-D036-8B
EL. 726'-6"
CVCS-11
CVCS-12
CVCF-D036-8
CVCF-D036-8A
EL. 724'-6"
FCV 62-69
CVCF-D036-8A
CVCF-D036-7
SECTION "C"-"C"
CVCF-D036-10F
CVCF-D036-10E
EL. 727'-6"
CVCF-D036-10H
CVCF-D036-10D
CVCF-D036-10C
CVCF-D036-10G
CVCF-D036-10I
EL. 726'-8"
EL. 726'-6"
CVCF-D036-10B
CVCF-D036-10J
CVCF-D036-10A
SECTION "B"-"B"
3 9-7-84 DELETED WELDS
2 1-11-84 ADD TEE SPECS, CHANGED CLASS DESIGNATIONS, CORRECTED FIELD WELD NOS, DELETE REF. DWG. REV. LEVEL
1 10-8-81 REDRAWN - GENERAL REVISION
NO. DATE REVISIONS
TENNESSEE VALLEY AUTHORITY
DIVISION OF NUCLEAR POWER
WATTS BAR NUCLEAR PLANT
UNIT #1
CHEMICAL AND VOLUME CONTROL SYSTEM
WELD LOCATIONS
SI-0005-C
R3

REFERENCE DRAWINGS
SK. 406-9 SH. 16

MATERIAL SPECIFICATIONS
CLASS I
PIPE
SA 376 TP 304
2" SCH 160
FITTINGS
SA 182 F 304
2" BORED SCH 160
FLANGES
SA 182 F 304
2" BORED SCH 160

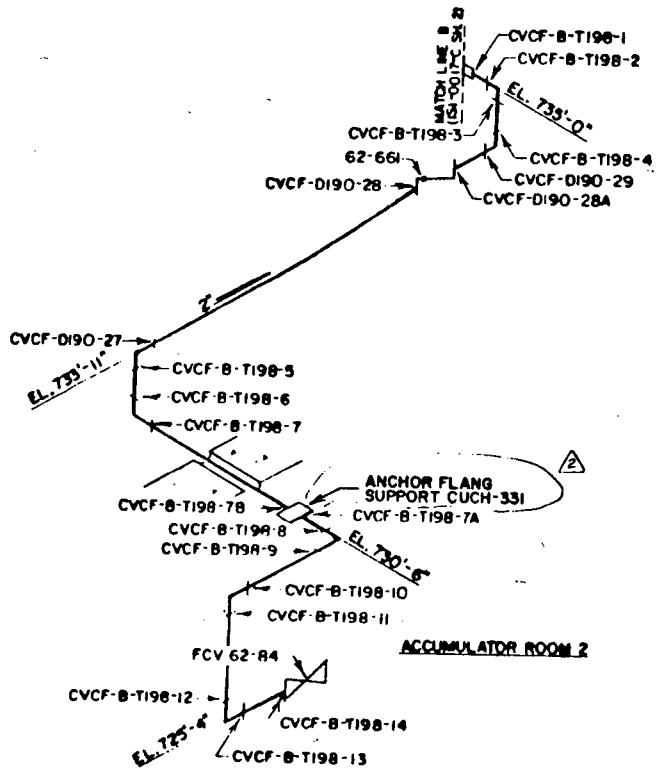

NO.	DATE	REVISIONS	CK'D	APP'D
2	10 22 84	DELETED BOLTED CONNECTION NUMBER CVCF-1-266		
1	1 20 84	ADD BOLTED CONNECTION AND CHANGED CLASS DESIGNATIONS		

TENNESSEE VALLEY AUTHORITY
DIVISION OF NUCLEAR POWER

WATTS BAR NUCLEAR PLANT
UNIT #1
CHEMICAL AND VOLUME CONTROL SYSTEM
WELD LOCATIONS

SCALE NTS
REV
DATE 8-8-83
SHEET 8
TSI-0005-C

WBNP
TI-50A
Appendix A
Page 88 of 362
Revision 14

REFERENCE DRAWINGS
47W435-251
0600200-15-02
CLASS 1 & 2

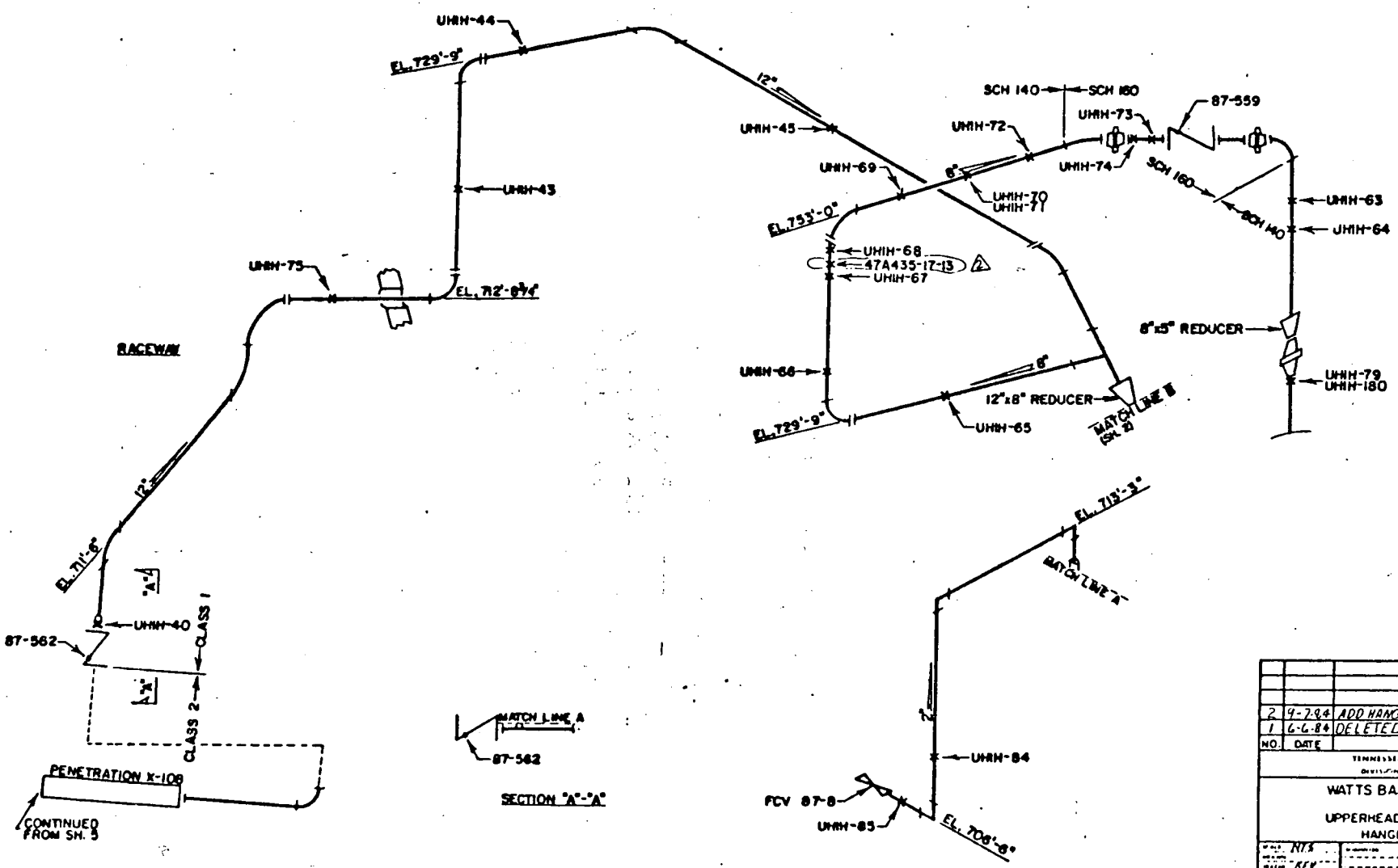

NO.	DATE	REVISIONS	CK'D	APP
2	9-7-84	ADD HANGER NO.		
1	6-6-84	DELETED ELEVATION		

TENNESSEE VALLEY AUTHORITY
DIVISION OF NUCLEAR POWER

WATTS BAR NUCLEAR PLANT
UNIT #1
UPPERHEAD INJECTION SYSTEM
HANGER LOCATIONS

NTS
51-0025-C R2

REFERENCE DRAWINGS
E-2879 IC-2
47W401-210
CLASS 2

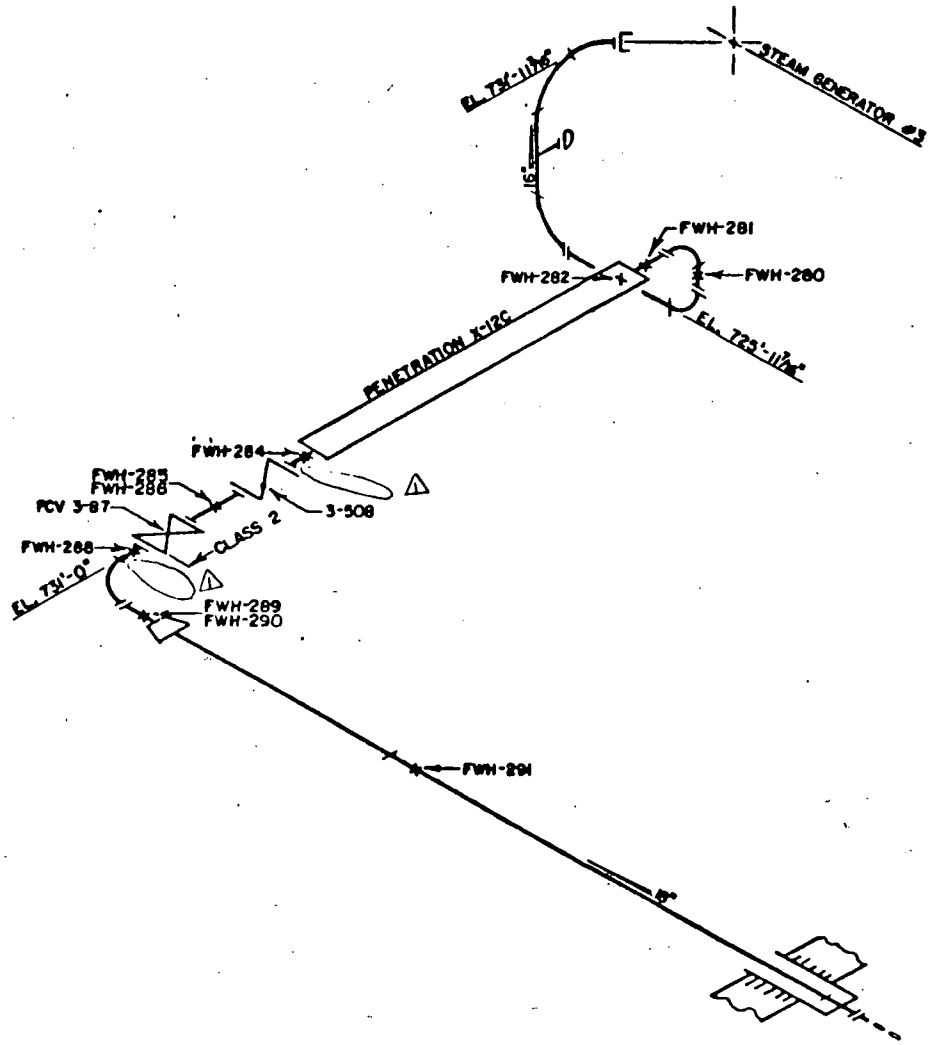

NO.	DATE	REVISION	CK'D	APP.
1	9-7-84	DELETED HANGERS		

TENNESSEE VALLEY AUTHORITY
DIVISION OF NUCLEAR POWER

WATTS BAR NUCLEAR PLANT
UNIT #1
FEEDWATER SYSTEM
HANGER LOCATIONS

NLS | 1-9-82 | 1-8 | 1SI-0062-C

WBNP
TI-50A
Appendix A
Page 149 of 362
Revision 14

TABLE G

COMPONENTS SUBJECT TO EXAMINATION CATEGORY

ASME CLASS 1 SUPPORTS

System	Dwg. No.	Table
RC	ISI-0010-C	IWB

Support No.	Sheet No.	Support Type: Pipe Size	Restraint	Snubber	Spring	Anchor	Stroke	Integrally-Welded Attachment Size	Exam Required	Bolting	Acceptance Range
RCH-79	1	3	X					No	VT-3	Yes	
RCH-80	1	3		PSA-3			5"	No	VT-3,4	Yes	1/4" - 1 7/16"
RCH-81	1	3			BP-4200-C1		5"	No	VT-3,4	Yes	3 5/8" - 4 3/4"
RCH-92	1	3	X					No	VT-3	Yes	
RCH-93	1	3		PSA-3			5"	No	VT-3,4	Yes	1/4" - 1 3/8"
RCH-94	1	3			CSB-4200-C1-14		4 1/2	No	VT-3,4	Yes	3 9/16" - 4 1/4"
RCH-96	1	3		PSA-3			5"	No	VT-3,4	Yes	1/4" - 1 1/2"
RCH-411	1	6	X					No	VT-3	No	
RCH-412	1	6		PSA-3(2)			5"	No	VT-3,4	Yes	3/8" - 4 11/16"
RCH-413	1	6		BP-CSV-13(2)			5"	Yes 3/4" lug	VT-3,4,ST	Yes	3 3/8" - 4 3/4"
RCH-415	1	3		PSA-1 (2)			4"	Yes 1/2" lug	VT-3,4	Yes	9/16" - 3 11/16"
RCH-420	1	6	X					No	VT-3	Yes	
RCH-426	1	6	X					No	VT-3	Yes	
RCH-427	1	6		PSA-3			5"	No	VT-3,4	Yes	3/4" - 4 3/4"
RCH-432	1	6	X					No	VT-3	Yes	

TABLE G (CONTINUED)

COMPONENTS SUBJECT TO EXAMINATION CATEGORY

ASME CLASS 1 SUPPORTS

System	Dwg. No.	Table
RC	ISI-0010-C	IWB

Support No.	Sheet No.	Support Type: Pipe Size	Restraint	Snubber	Spring	Anchor	Stroke	Integrally-Welded Attachment Size	Exam Required	Bolting	Acceptance Range
RCH-433	1	6		PSA-10 (2)			6"	No	VT-3,4	Yes	9/16" - 5 3/4"
RCH-11	2	6			BP-22A1 (2)		4"	No	VT-3,4	Yes	3 1/16" - 3 3/4"
RCH-12	2	6		PSA-3			5"	No	VT-3,4	Yes	5/8" - 4 3/4"
RCH-14	2	6	X					No	VT-3	Yes	
RCH-15	2	6	X					No	VT-3	Yes	
RCH-18	2	6		PSA-1/4			4"	No	VT-3,4	Yes	1" - 1 3/4"
RCH-20	2	4		PSA-3			5"	No	VT-3,4	Yes	9/16" - 4 9/16"
RCH-21	2	4		PSA-1 (2)			4"	No	VT-3,4	Yes	1/4" - 3 3/8"
RCH-22	2	4		PSA-1			4"	No	VT-3,4	Yes	1/4" - 2 5/8"
RCH-25	2	4			BP-VS2F-10		2 1/4	No	VT-3,4	Yes	5/8" - 2"
RCH-26	2	4	X					No	VT-3	Yes	
RCH-27	2	4		PSA-3			5"	No	VT-3,4	Yes	1/4" - 4 3/16"
RCH-28	2	4			BP-VS4A-8		4 1/2	No	VT-3,4	Yes	1" - 4 1/4"
RCH-29	2	4	X					No	VT-3	Yes	
RCH-30	2	4		PSA-3			5"	No	VT-3,4	Yes	3/4" - 4 3/4"

TABLE G (CONTINUED)

COMPONENTS SUBJECT TO EXAMINATION CATEGORY

ASME CLASS 1 SUPPORTS

System	Dwg. No.	Table
RC	ISI-0010-C	IWB

Support No.	Sheet No.	Support Type: Pipe Size	Restraint	Snubber	Spring	Anchor	Stroke	Integrally-Welded Attachment Size	Exam Required	Bolting	Acceptance Range
RCH-31	2	4		PSA-1/4			4"	No	VT-3,4	Yes	1 5/8" - 3 3/4"
RCH-34	2	4		PSA-1			4"	No	VT-3,4	Yes	1" - 3 3/4"
RCH-35	2	4			BP-VS4B-7 (2)		4 1/2	No	VT-3,4	Yes	3/4" - 4 1/4"
RCH-36	2	4		PSA-1/2			2 1/2	No	VT-3,4	Yes	3/4" - 2 1/4"
RCH-37	2	4	X					No	VT-3	Yes	
RCH-38	2	4	X					No	VT-3	Yes	
RCH-39	2	4		PSA-10			6"	No	VT-3,4	Yes	1 13/16" - 5 3/4"
RCH-40	2	4	X					No	VT-3	Yes	
RCH-41	2	4		PSA-3			5"	No	VT-3,4	Yes	1 1/16" - 4 3/4"
RCH-54	2	6	X					No	VT-3	Yes	
RCH-55	2	6		PSA-1/2			2 1/2	No	VT-3,4	Yes	5/8" - 2 1/4"
RCH-57	2	6	X					No	VT-3	Yes	
RCH-151	3	3		PSA-3			5"	No	VT-3,4	Yes	1/4" - 3 15/16"
RCH-152	3	3		PSA-1/4			4"	No	VT-3,4	Yes	1 1/2" - 3 3/4"
RCH-153	3	3	X					No	VT-3	Yes	

TABLE G (CONTINUED)

COMPONENTS SUBJECT TO EXAMINATION CATEGORY

ASME CLASS 1 SUPPORTS

System	Dwg. No.	Table
RC	ISI-0010-C	IWB

Support No.	Sheet No.	Support Type: Pipe Size	Restraint	Snubber	Spring	Anchor	Stroke	Integrally-Welded Attachment Size	Exam Required	Bolting	Acceptance Range
RCH-155	3	3		PSA-3			5"	No	VT-3,4	Yes	3/8" - 4 11/16"
RCH-156	3	3	X					No	VT-3	No	
RCH-157	3	3		PSA-1			4"	No	VT-3,4	Yes	1 1/2" - 3 3/4"
RCH-163	3	3			BP-VS2C-9		2 1/4	No	VT-3,4	Yes	11/16" - 2"
RCH-164	3	3		PSA-1			4"	No	VT-3,4	Yes	1/4" - 3 3/8"
RCH-165	3	3	X					No	VT-3	Yes	
RCH-166	3	3	X					No	VT-3	Yes	
RCH-167	3	3		PSA-1			4"	No	VT-3,4	Yes	1/4" - 1 7/8"
RCH-168	3	3	X					No	VT-3	Yes	
RCH-192	4	3		PSA-1			4"	No	VT-3,4	Yes	1" - 3 3/4"
RCH-193	4	3		PSA-3			5"	No	VT-3,4	Yes	1 5/8" - 4 3/4"
RCH-194	4	3		PSA-3			5"	No	VT-3,4	Yes	7/16" - 4 3/4"
RCH-195	4	3		PSA-1/4			4"	No	VT-3,4	Yes	1 1/2" - 3 3/4"
RCH-196	4	3	X					No	VT-3	Yes	

TABLE G (CONTINUED)

COMPONENTS SUBJECT TO EXAMINATION CATEGORY

ASME CLASS 1 SUPPORTS

System	Dwg. No.	Table
RC	ISI-0010-C	IWB

Support No.	Sheet No.	Support Type: Pipe Size	Restraint	Snubber	Spring	Anchor	Stroke	Integrally-Welded Attachment Size	Exam Required	Bolting	Acceptance Range
RCH-197	4	3	X					No	VT-3	Yes	
RCH-198	4	3	X					No	VT-3	Yes	
RCH-199	4	3		PSA-1			4"	No	VT-3,4	Yes	1 7/8" - 3 3/4"
RCH-200	4	3	X					No	VT-3	No	
RCH-201	4	3		PSA-1/2			2 1/2	No	VT-3,4	Yes	1/4" - 1 13/16"
RCH-202	4	3	X					No	VT-3	Yes	
RCH-203	4	3	X					No	VT-3	Yes	
RCH-204	4	3		PSA-1			4"	No	VT-3,4	Yes	2 7/16" - 3 3/4"
RCH-246	5	3			BP-3200-B6		2 1/4	No	VT-3,4	Yes	1/4" - 1 13/16"
RCH-251	5	3		PSA-1/2			2 1/2	No	VT-3,4	Yes	3/8" - 1 7/8"
RCH-252	5	3		PSA-1/4			4"	No	VT-3,4	Yes	2 3/8" - 3 3/4"
RCH-253	5	3	X					No	VT-3	Yes	
RCH-255	5	3		PSA-1/2			2 1/2	No	VT-3,4	Yes	1/4" - 2 1/16"
RCH-257	5	3		PSA-1			4"	No	VT-3,4	Yes	2 3/16" - 3 3/4"

TABLE G (CONTINUED)

COMPONENTS SUBJECT TO EXAMINATION CATEGORY

ASME CLASS 1 SUPPORTS

System	Dwg. No.	Table
RC	ISI-0010-C	IWB

Support No.	Sheet No.	Support Type: Pipe Size	Restraint	Snubber	Spring	Anchor	Stroke	Integrally-Welded Attachment Size	Exam Required	Bolting	Acceptance Range
RCH-263	5	3			BP-VS2C-10		2 1/4	No	VT-3,4	Yes	5/16" - 1 5/8"
RCH-264	5	3		PSA-1/4			4"	No	VT-3,4	Yes	5/16" - 3 5/16"
RCH-265	5	3	X					No	VT-3	Yes	
RCH-266	5	3	X					No	VT-3	Yes	
RCH-267	5	3	X					No	VT-3	Yes	
RCH-268	5	3		PSA-1			4"	No	VT-3,4	Yes	1/4" - 1 3/4"
RCH-301	6	3		PSA-1			4"	No	VT-3,4	Yes	9/16" - 3 5/16"
RCH-302	6	3		PSA-1/4			4"	No	VT-3,4	Yes	1 9/16" - 3 3/4"
RCH-303	6	3	X					No	VT-3	Yes	
RCH-305	6	3		PSA-1			4"	No	VT-3,4	Yes	3/8" - 3 5/8"
RCH-306	6	3	X					No	VT-3	Yes	
RCH-307	6	3		PSA-1			4"	No	VT-3,4	Yes	2" - 3 3/4"
RCH-313	6	3			BP-VS2C-9		2 1/4	No	VT-3,4	Yes	3/8" - 1 15/16"
RCH-314	6	3		PSA-1			4"	No	VT-3,4	Yes	5/16" - 3 5/8"
RCH-315	6	3	X					No	VT-3	Yes	

TABLE G (CONTINUED)

COMPONENTS SUBJECT TO EXAMINATION CATEGORY

ASME CLASS 1 SUPPORTS

System	Dwg. No.	Table
RC	ISI-0010-C	IWB

Support No.	Sheet No.	Support Type: Pipe Size	Restraint	Snubber	Spring	Anchor	Stroke	Integrally-Welded Attachment Size	Exam Required	Bolting	Acceptance Range
RCH-316	6	3	X					No	VT-3	Yes	
RCH-317	6	3	X					No	VT-3	Yes	
RCH-318	6	3		PSA-1			4"	No	VT-3,4	Yes	1/4" - 1 5/8"
RCH-146	7	2			BP-3200-CR13-6		2 1/4	No	VT-3,4	Yes	1/4" - 1 11/16"
RCH-147	7	2	X					No	VT-3	Yes	
RCH-148	7	2		PSA-1/2			2 1/2	No	VT-3,4	Yes	1 3/4" - 2 1/4"
RCH-149	7	2	X					No	VT-3	Yes	
RCH-150	7	2		PSA-1/4			4"	No	VT-3,4	Yes	1 9/16" - 3 3/4"
RCH-158	7	2	X					No	VT-3	Yes	
RCH-159	7	2	X					No	VT-3	Yes	
RCH-160	7	2		PSA-1/4			4"	No	VT-3,4	Yes	1/4" - 1 3/4"
RCH-161	7	2	X					No	VT-3	Yes	
RCH-162	7	2		PSA-1			4"	No	VT-3,4	Yes	1/4" - 1 5/8"
RCH-173	7	2		PSA-3			5"	No	VT-3,4	Yes	1 1/2" - 4 1/2"

TABLE G (CONTINUED)

COMPONENTS SUBJECT TO EXAMINATION CATEGORY

ASME CLASS 1 SUPPORTS

System	Dwg. No.	Table
RC	ISI-0010-C	IWB

Support No.	Sheet No.	Support Type: Pipe Size	Restraint	Snubber	Spring	Anchor	Stroke	Integrally-Welded Attachment Size	Exam Required	Bolting	Acceptance Range
RCH-189	8	2			BP-VSID-8		1 1/8	No	VT-3,4	Yes	7/16" - 7/8"
RCH-190	8	2	X					No	VT-3	Yes	
RCH-191	8	2		PSA-1/2			2 1/2	No	VT-3	Yes	1 15/16" - 2 1/4"
RCH-205	8	2	X					No	VT-3	Yes	
RCH-206	8	2	X					No	VT-3	Yes	
RCH-207	8	2		PSA-1			4"	No	VT-3,4	Yes	5/16" - 3 5/8"
RCH-208	8	2		PSA-1			4"	No	VT-3,4	Yes	2 7/16" - 3 11/16"
RCH-209	8	2	X					No	VT-3	Yes	
RCH-210	8	2		PSA-1			4"	No	VT-3,4	Yes	1/4" - 2 1/4"
RCH-215	8	2		PSA-3			5"	No	VT-3,4	Yes	7/8" - 3 15/16"
RCH-247	9	2	X					No	VT-3	Yes	
RCH-248	9	2		PSA-1/4			4"	No	VT-3,4	Yes	1/4" - 2 1/8"
RCH-250	9	2		PSA-1/4			4"	No	VT-3,4	Yes	2 3/8" - 3 3/4"
RCH-258	9	2	X					No	VT-3	Yes	
RCH-259	9	2	X					No	VT-3	Yes	
RCH-260	9	2		PSA-1			4"	No	VT-3,4	Yes	1/4" - 1 9/16"

TABLE G (CONTINUED)

COMPONENTS SUBJECT TO EXAMINATION CATEGORY

ASME CLASS 1 SUPPORTS

System	Dwg. No.	Table
RC	ISI-0010-C	IWB

Support No.	Sheet No.	Support Type: Pipe Size	Restraint	Snubber	Spring	Anchor	Stroke	Integrally-Welded Attachment Size	Exam Required	Bolting	Acceptance Range
RCH-261	9	2	X					No	VT-3	No	
RCH-262	9	2		PSA-1			4"	No	VT-3,4	Yes	2 3/4" - 3 3/4"
RCH-296	10	2			BP-VS2C-9		2 1/4	No	VT-3,4	Yes	19/64" - 1 5/8"
RCH-297	10	2	X					No	VT-3	Yes	
RCH-298	10	2		PSA-1			4"	No	VT-3,4	Yes	2 1/16" - 3 3/4"
RCH-299	10	2	X					No	VT-3	Yes	
RCH-300	10	2		PSA-1/4			4"	No	VT-3,4	Yes	1 5/8" - 3 3/4"
RCH-308	10	2	X					No	VT-3	Yes	
RCH-309	10	2	X					No	VT-3	Yes	
RCH-310	10	2		PSA-1			4"	No	VT-3,4	Yes	1/4" - 1 7/16"
RCH-311	10	2	X					No	VT-3	Yes	
RCH-312	10	2		PSA-3			5"	No	VT-3,4	Yes	2 5/16" - 4 3/4"
RCH-319	10	2		PSA-3			5"	No	VT-3,4	Yes	1/4" - 3 7/8"
RCH-333	11	2		PSA-1/2			2 1/2	No	VT-3,4	Yes	1/4" - 1 1/8"
RCH-334	11	2		PSA-1	BP-VS2A-4		2 1/4	No	VT-3,4	Yes	1/4" - 3 1/4"
							4"				1/4" - 1 1/8"

TABLE G (CONTINUED)

COMPONENTS SUBJECT TO EXAMINATION CATEGORY

ASME CLASS 1 SUPPORTS

System	Dwg. No.	Table
RC	ISI-0010-C	IWB

Support No.	Sheet No.	Support Type: Pipe Size	Restraint	Snubber	Spring	Anchor	Stroke	Integrally-Welded Attachment Size	Exam Required	Bolting	Acceptance Range
RCH-335	11	2		PSA 1/4(2)			4"(vert) 4"(horz)	No	VT-3,4	Yes	1/4" - 3 1/16" 1/4" - 2 1/16"
RCH-347	11	2		PSA-1/4			4"	No	VT-3,4	Yes	1/4" - 2 5/8"
RCH-348	11	2			BP-3400-4C		4 1/2	No	VT-3,4	Yes	1/4" - 3 3/8"
RCH-349	11	2		PSA-1/4			4"	No	VT-3,4	Yes	7/8" - 3 3/4"
RCH-350	11	2		PSA-1/4(2)			4"(vert) 4"(horz)	No	VT-3,4	Yes	1/4" - 3 1/16" 1/4" - 2 1/8"
RCH-363	11	2		PSA-1/2			2 1/2	No	VT-3,4	Yes	1/4" - 1 1/8"
RCH-364	11	2		PSA-1	BP-VS2B-3		4"	No	VT-3,4	Yes	1/4" - 3 5/16"
							2 1/4"				1/4" - 1 9/16"
RCH-365	11	2		PSA-1/4 (2)			4"(vert) 4"(horz)	No	VT-3,4	Yes	1/4" - 2 15/16" 1 7/8" - 3 3/4"
RCH-378	11	2		PSA-1/2			2 1/2	No	VT-3,4	Yes	1/4" - 1 5/16"
RCH-379	11	2		PSA-1/2	BP-VS2B-3		2 1/2	No	VT-3,4	Yes	1/4" - 2"
							2 1/4				1/4" - 1 3/8"
RCH-380	11	2		PSA-1/4(2)			4"(vert) 4"(horz)	No	VT-3,4	Yes	1/4" - 3 5/16" 1 13/16" - 3 3/4"

TABLE G (CONTINUED)

COMPONENTS SUBJECT TO EXAMINATION CATEGORY

ASME CLASS 1 SUPPORTS

System	Dwg. No.	Table
RHR	ISI-0020-C	IWB

Support No.	Sheet No.	Support Type: Pipe Size	Restraint	Snubber	Spring	Anchor	Stroke	Integrally-Welded Attachment Size	Exam Required	Bolting	Acceptance Range
RHRH-2	1	14	X					No	VT-3	Yes	
RHRH-5	1	14	X					No	VT-3	Yes	
RHRH-6	1	14	X					No	VT-3	Yes	
RHRH-7	1	14		PSA-10 (2)			6"	No	VT-3,4	Yes	2 3/8" - 5 3/4"
RHRH-8	1	14		PSA-35 (2)			6"	No	VT-3,4	Yes	1 1/4" - 5 1/8"
RHRH-10	1	14	X					No	VT-3	Yes	
RHRH-11	1	10		PSA-10			6"	No	VT-3,4	Yes	1/4" - 3 13/16"
RHRH-12	1	10	X					No	VT-3	No	
RHRH-20	1	14		PSA-10 (2)			6"	No	VT-3,4	Yes	1 1/8" - 5 3/4"
RHRH-22	1	14			BP-VSIF-18		1 1/8	No	VT-3	Yes	3/8" - 7/16"
RHRH-23	1	14		PSA-35			6"	No	VT-3, 4	Yes	1/4" - 5 1/2"
SIH-365	7	6		PSA-10			6"	No	VT-3,4	Yes	3/4" - 5 1/4"
SIH-366	7	6		PSA-10			6"	No	VT-3,4	Yes	1 3/8" - 5 3/4"
SIH-367	7	8			BP-VS2F		2 1/4	No	VT-3	Yes	1/2 - 2"
SIH-368	7	8		PSA-10			6"	No	VT-3,4	Yes	1/4" - 5 3/8"
SIH-369	7	8	X					No	VT-3	Yes	

TABLE G (CONTINUED)

COMPONENTS SUBJECT TO EXAMINATION CATEGORY

ASME CLASS 1 SUPPORTS

System	Dwg. No.	Table
RHR	ISI-0020-C	IWB

Support No.	Sheet No.	Support Type: Pipe Size	Restraint	Snubber	Spring	Anchor	Stroke	Integrally-Welded Attachment Size	Exam Required	Bolting	Acceptance Range
SIH-370	7	8	X					No	VT-3	Yes	
SIH-340	8	8		PSA-35			6"	No	VT-3,4	Yes	1 1/4" - 5 3/4"
SIH-341	8	8		PSA-10			6"	No	VT-3,4	Yes	11/16" - 5 3/4"
SIH-342	8	8			BP-VS4B		4 1/2	No	VT-3	Yes	5/8" - 4 1/4"
SIH-343	8	8	X					No	VT-3	Yes	
SIH-344	8	8		PSA-3			5"	No	VT-3,4	Yes	1/4" - 3 3/4"
SIH-345	8	8	X					No	VT-3	Yes	
SIH-346	8	8	X					No	VT-3	Yes	
SIH-596	8	2		PSA-1			4"	No	VT-3,4	Yes	3/8" - 3 3/4"
SIH-597	8	8		PSA-1/4			4"	No	VT-3,4	Yes	1/4" - 3 9/16"
SIH-598	8	8		PSA-1/4			4"	No	VT-3,4	Yes	5/16" - 3 3/4"
SIH-602	8	8		PSA-10			6"	No	VT-3,4	No	7/8" - 5 3/4"
SIH-388	7	2	X					No	VT-3	Yes	
SIH-387	7	2	X					No	VT-3	Yes	

TABLE G (CONTINUED)

COMPONENTS SUBJECT TO EXAMINATION CATEGORY

ASME CLASS 1 SUPPORTS

System	Dwg. No.	Table
SIS	ISI-0021-C	IWB

Support No.	Sheet No.	Support Type: Pipe Size	Restraint	Snubber	Spring	Anchor	Stroke	Integrally-Welded Attachment Size	Exam Required	Bolting	Acceptance Range
SIH-065	4	6		PSA-3			5"	No	VT-3,4	Yes	2 3/8" - 4 3/4"
SIH-066	4	6		PSA-3			5"	No	VT-3,4	Yes	11/16" - 4 3/4"
SIH-067	4	6	X					No	VT-3	Yes	
SIH-068	4	6	X					No	VT-3	Yes	
SIH-070	4	10	X					No	VT-3	Yes	
SIH-071	4	10		PSA-35			6"	No	VT-3,4	Yes	1/4" - 5 5/8"
SIH-072	4	10	X					No	VT-3	Yes	
SIH-073	4	10		PSA-10			6"	No	VT-3,4	Yes	1/4" - 5 11/16"
SIH-080	4	6			BP-VS2B (2)		2 1/4	No	VT-3	Yes	1/4" - 1 9/16"
SIH-081	4	6		PSA-3			5"	No	VT-3,4	Yes	15/16" - 4 3/4"
SIH-082	4	6	X					No	VT-3	Yes	
SIH-083	4	6	X					No	VT-3	Yes	
SIH-084	4	10	X					No	VT-3	Yes	
SIH-085	4	10		PSA-10 (2)			6"	No	VT-3,4	Yes	1/4" - 5 3/8"
SIH-086	4	10		PSA-35			6"	No	VT-3,4	Yes	1/4 - 5 1/4"

TABLE G (CONTINUED)

COMPONENTS SUBJECT TO EXAMINATION CATEGORY

ASME CLASS 1 SUPPORTS

System	Dwg. No.	Table
SIS	ISI-0021-C	IWB

Support No.	Sheet No.	Support Type: Pipe Size	Restraint	Snubber	Spring	Anchor	Stroke	Integrally-Welded Attachment Size	Exam Required	Bolting	Acceptance Range
SIH-087	4	10	X					No	VT-3	Yes	
SIH-088	4	10	X					No	VT-3,4	Yes	
SIH-089	4	10	X					No	VT-3,4	Yes	
SIH-090	4	10	X					No	VT-3	Yes	
47A435-9-69	4	10	X					No	VT-3	Yes	
SIH-1	7	10		PSA-35			6"	No	VT-3,4	Yes	1 7/16" - 5 3/4"
SIH-2	7	10			BP-VS2B		2 1/4	No	VT-3	Yes	9/16" - 2"
SIH-3	7	10		PSA-3			5"	No	VT-3,4	Yes	11/16" - 4 5/8"
SIH-4	7	10	X					No	VT-3	Yes	
SIH-5	7	10	X					No	VT-3	Yes	
SIH-6	7	10	X					No	VT-3	Yes	
SIH-7	7	10	X					No	VT-3	No	
SIH-8	7	10		PSA-10			6"	No	VT-3,4	Yes	1/4" - 4 7/8"
SIH-10	7	6	X					No	VT-3	Yes	
SIH-11	7	6		PSA-1			4"	No	VT-3,4	Yes	3/8" - 3 3/4"

TABLE G (CONTINUED)

COMPONENTS SUBJECT TO EXAMINATION CATEGORY

ASME CLASS 1 SUPPORTS

System	Dwg. No.	Table
SIS	ISI-002I-C	IWB

Support No.	Sheet No.	Support Type: Pipe Size	Restraint	Snubber	Spring	Anchor	Stroke	Integrally-Welded Attachment Size	Exam Required	Bolting	Acceptance Range
SIH-12	7	6	X					No	VT-3	Yes	
SIH-451	7	10			BP-VS1A		1 1/8	No	VT-3,4	Yes	7/16" - 7/8"
SIH-452	7	10		PSA-10			6"	No	VT-3,4	Yes	7/16" - 5 3/4"
SIH-453	7	10		PSA-35			6"	No	VT-3,4	Yes	9/16" - 5 3/4"
SIH-454	7	10		PSA-10 (2)			6"	No	VT-3,4	Yes	1/4" - 5 11/16"
SIH-455	7	10	X					No	VT-3	Yes	
SIH-456	7	10	X					No	VT-3	Yes	
SIH-458	7	10		PSA-35			6"	No	VT-3,4	Yes	1/4" - 4 5/8"
SIH-459	7	10		PSA-3			5"	No	VT-3,4	Yes	1/4" - 4 1/8"
SIH-444	7	10			BP-VS1B		1 1/8	No	VT-3	Yes	1/4" - 3/4"
SIH-480	7	10		PSA-3			5"	No	VT-3,4	Yes	1/4" - 4 5/8"
SIH-482	7	10	X					No	VT-3	No	
47A435-7-60	7	10		PSA-35			6"	No	VT-3,4	Yes	1 7/16" - 5 3/4"
SIH-461	7	6	X					No	VT-3	Yes	
SIH-462	7	6		PSA-3 (2)			5"	No	VT-3,4	Yes	1/2" - 4 3/4"

TABLE G (CONTINUED)

COMPONENTS SUBJECT TO EXAMINATION CATEGORY

ASME CLASS 1 SUPPORTS

System	Dwg. No.	Table
SIS	ISI-0021-C	IWB

Support No.	Sheet No.	Support Type: Pipe Size	Restraint	Snubber	Spring	Anchor	Stroke	Integrally-Welded Attachment Size	Exam Required	Bolting	Acceptance Range
SIH-463	7	6	X					No	VT-3	Yes	
SIH-464	7	6	X					No	VT-3	Yes	
SIH-150	8	2 1/2	X					No	VT-3	Yes	
SIH-151	8	2 1/2	X					No	VT-3	Yes	
SIH-152	8	2 1/2	X					No	VT-3	Yes	
SIH-153	8	2 1/2	X					No	VT-3	Yes	
SIH-154	8	2 1/2	X					No	VT-3	Yes	
SIH-155	8	2 1/2	X					No	VT-3	Yes	
SIH-166	8	3	X					No	VT-3	Yes	
SIH-167	8	3	X					No	VT-3	No	
SIH-168	8	3	X					No	VT-3	No	
SIH-191	8	2 1/2	X					No	VT-3	Yes	
SIH-192	8	2 1/2	X					No	VT-3	Yes	
SIH-193	8	2 1/2	X					No	VT-3	Yes	
SIH-194	8	2 1/2	X					No	VT-3	Yes	

TABLE G (CONTINUED)

COMPONENTS SUBJECT TO EXAMINATION CATEGORY

ASME CLASS 1 SUPPORTS

System	Dwg. No.	Table
SIS	ISI-0021-C	IWB

Support No.	Sheet No.	Support Type: Pipe Size	Restraint	Snubber	Spring	Anchor	Stroke	Integrally-Welded Attachment Size	Exam Required	Bolting	Acceptance Range
SIH-195	8	2 1/2	X					No	VT-3	Yes	
SIH-196	8	2 1/2	X	PSA-1/4			4"	No	VT-3,4	Yes	1/4" - 3 3/8"
SIH-197	8	2 1/2	X					No	VT-3	Yes	
SIH-198	8	2 1/2	X					No	VT-3	No	
SIH-199	8	2 1/2	X					No	VT-3	No	
47A435-8-73	9	2	X					No	VT-3	Yes	
SIH-119	9	2	X					No	VT-3	Yes	
SIH-093	9	2	X					No	VT-3	Yes	
SIH-094	9	2		PSA-1/4			4"	No	VT-3,4	Yes	1 13/16" - 3 3/4"
SIH-096	9	2		PSA-1/4			4"	No	VT-3,4	Yes	1/4" - 3 5/8"
SIH-097	9	2	X					No	VT-3	Yes	
SIH-115	9	2	X					No	VT-3	Yes	
SIH-116	9	2		PSA-1/4			4"	No	VT-3	Yes	7/8" - 3 3/4"
SIH-117	9	2	X					No	VT-3	Yes	
RHRH-17	10	2		PSA-1			4"	No	VT-3,4	Yes	1/4" - 3 9/16"

TABLE G (CONTINUED)

COMPONENTS SUBJECT TO EXAMINATION CATEGORY

ASME CLASS 1 SUPPORTS

System	Dwg. No.	Table
SIS	ISI-0021-C	IWB

Support No.	Sheet No.	Support Type: Pipe Size	Restraint	Snubber	Spring	Anchor	Stroke	Integrally-Welded Attachment Size	Exam Required	Bolting	Acceptance Range
RHRH-18	10	2	X					No	VT-3	No	
RHRH-19	10	2	X					No	VT-3	No	
RHRH-21	10	2	X					No	VT-3	No	
SIH-38	10	2		PSA-1/4 (2)			4"	No	VT-3,4	Yes	1/4" - 3 11/16"
SIH-39	10	2		PSA-1/4			4"	No	VT-3,4	Yes	9/16" - 3 3/4"
47A435-8-34	10	6			BPVS1GB (2)		1 1/8"	No	VT-3,4	Yes	3/8" - 7/8"
47A435-8-35	10	2		PSA-1			4"	No	VT-3,4	Yes	1/4" - 2 13/16"
47A435-8-36	10	2		PSA-1			4"	No	VT-3,4	Yes	1/4" - 2 7/8"
47A435-8-37	10	2	X					No	VT-3	No	
47A435-8-38	10	2		PSA-1/4			4"	No	VT-3,4	No	1 1/16" - 3 3/4"
47A435-8-39	10	2		PSA-1/4			4"	No	VT-3,4	Yes	1/4" - 3 9/16"
47A435-8-40	10	2		PSA-1/4			4"	No	VT-3,4	Yes	1/4 - 3 5/16"

TABLE G (CONTINUED)

COMPONENTS SUBJECT TO EXAMINATION CATEGORY

ASME CLASS 1 SUPPORTS

System	Dwg. No.	Table
SIS	ISI-0021-C	IWB

Support No.	Sheet No.	Support Type: Pipe Size	Restraint	Snubber	Spring	Anchor	Stroke	Integrally-Welded Attachment Size	Exam Required	Bolting	Acceptance Range
SIH-283	10	2	X					No	VT-3	No	
SIH-284	10	2	X					No	VT-3	Yes	
SIH-288	10	2	X					No	VT-3	Yes	
SIH-328	10	2	X					No	VT-3	Yes	
SIH-329	10	2	X					No	VT-3	Yes	
SIH-442	10	2	X					No	VT-3	Yes	
SIH-465	10	2		PSA-1/4			4"	No	VT-3,4	Yes	11/16" - 3 3/4"
SIH-175	11	1 1/2	X					No	VT-3	Yes	
SIH-176	11	1 1/2	X					No	VT-3	No	
SIH-177	11	1 1/2	X					No	VT-3	Yes	
SIH-178	11	1 1/2	X					No	VT-3	No	
SIH-179	11	1 1/2	X					No	VT-3	Yes	
SIH-180	11	1 1/2	X					No	VT-3	No	
SIH-181	11	1 1/2	X					No	VT-3	Yes	
SIH-182	11	1 1/2	X					No	VT-3	No	

TABLE G (CONTINUED)

COMPONENTS SUBJECT TO EXAMINATION CATEGORY

ASME CLASS 1 SUPPORTS

System	Dwg. No.	Table
SIS	ISI-0021-C	IWB

Support No.	Sheet No.	Support Type: Pipe Size	Restraint	Snubber	Spring	Anchor	Stroke	Integrally-Welded Attachment Size	Exam Required	Bolting	Acceptance Range
SIH-183	11	1 1/2	X					No	VT-3	Yes	
SIH-184	11	1 1/2	X					No	VT-3	No	
SIH-185	11	1 1/2		PSA-1/2			2 1/2	No	VT-3,4	Yes	1 1/2" - 1 15/16"
SIH-186	11	1 1/2	X					No	VT-3	Yes	
SIH-187	11	1 1/2		PSA-1/2			2 1/2	No	VT-3,4	Yes	1/4" - 1 1/8"
SIH-189	11	1 1/2	X					No	VT-3	No	
RHRH-14	10	6		PSA-3			5"	No	VT-3,4	Yes	1 11/16" - 4 3/4"
RHRH-24	10	6	X					No	VT-3	No	
RHRH-15	10	6		PSA-1/2			2 1/2	No	VT-3,4	Yes	11/16" - 2 1/4"
RHRH-13	10	6	X					No	VT-3	Yes	
SIH-520	11	1 1/2		PSA-1/4			4"	No	VT-3,4	Yes	3/4" - 2 5/8"
SIH-521	11	1 1/2	X					No	VT-3	No	
SIH-522	11	1 1/2	X					No	VT-3	No	
SIH-523	11	1 1/2		PSA-1/4			4"	No	VT-3,4	Yes	1 3/16" - 3 5/16"
SIH-524	11	1 1/2	X					No	VT-3	No	

TABLE G (CONTINUED)

COMPONENTS SUBJECT TO EXAMINATION CATEGORY

ASME CLASS 1 SUPPORTS

System	Dwg. No.	Table
SIS	ISI-0021-C	IWB

Support No.	Sheet No.	Support Type: Pipe Size	Restraint	Snubber	Spring	Anchor	Stroke	Integrally-Welded Attachment Size	Exam Required	Bolting	Acceptance Range
SIH-525	11	1 1/2	X					No	VT-3	No	
SIH-526	11	1 1/2	[illegible]	PSA-1/4			4"	No	VT-3,4	Yes	11/16" - 3 3/4"
SIH-212	12	1 1/2	X	[illegible]				No	VT-3	No	
SIH-213	12	1 1/2	X					No	VT-3	Yes	
SIH-214	12	1 1/2	X	[illegible]				No	VT-3	Yes	
SIH-215	12	1 1/2	X					No	VT-3	No	
SIH-216	12	1 1/2	X	[illegible]				No	VT-3	No	
SIH-217	12	1 1/2	X					No	VT-3	No	
SIH-218	12	1 1/2	X	[illegible]				No	VT-3	No	
SIH-219	12	1 1/2	X					No	VT-3	No	
SIH-220	12	1 1/2	X					No	VT-3	No	
SIH-221	12	1 1/2	X					No	VT-3	No	
SIH-222	12	1 1/2	X					No	VT-3	Yes	
SIH-223	12	1 1/2	X					No	VT-3	Yes	
SIH-224	12	1 1/2	[illegible]	PSA-1/2			2 1/2	No	VT-3,4	Yes	15/16" - 2 1/4"

TABLE G (CONTINUED)

COMPONENTS SUBJECT TO EXAMINATION CATEGORY

ASME CLASS 1 SUPPORTS

System	Dwg. No.	Table
SIS	ISI-0021-C	IWB

Support No.	Sheet No.	Support Type: Pipe Size	Restraint	Snubber	Spring	Anchor	Stroke	Integrally-Welded Attachment Size	Exam Required	Bolting	Acceptance Range
SIH-225	12	1 1/2	X					No	VT-3	No	
SIH-226	12	1 1/2	X					No	VT-3	No	
SIH-227	12	1 1/2	X					No	VT-3	Yes	
SIH-228	12	1 1/2		PSA-1/4			4"	No	VT-3,4	Yes	1/4" - 3 9/16"
SIH-550	12	1 1/2	X					No	VT-3	No	
SIH-546	12	1 1/2	X					No	VT-3	Yes	
SIH-547	12	1 1/2		PSA-1/4			4"	No	VT-3,4	Yes	1/4" - 5 5/16"
SIH-548	12	1 1/2		PSA-1/4"			4"	No	VT-3,4	Yes	11/16" - 3 5/8"
SIH-549	12	1 1/2		PSA-1/4"			4"	No	VT-3,4	Yes	1/4" - 3 1/8"
SIH-553	12	1 1/2	X					No	VT-3	Yes	
SIH-200	13	1 1/2	X					No	VT-3	No	
SIH-201	13	1 1/2	X					No	VT-3	Yes	
SIH-202	13	1 1/2		PSA-1/2			2 1/2	No	VT-3,4	Yes	7/16" - 2 1/4"
SIH-203	13	1 1/2	X					No	VT-3	Yes	
SIH-204	13	1 1/2	X					No	VT-3	No	

TABLE G (CONTINUED)

COMPONENTS SUBJECT TO EXAMINATION CATEGORY

ASME CLASS 1 SUPPORTS

System	Dwg. No.	Table
SIS	ISI-0021-C	IWB

Support No.	Sheet No.	Support Type: Pipe Size	Restraint	Snubber	Spring	Anchor	Stroke	Integrally-Welded Attachment Size	Exam Required	Bolting	Acceptance Range
SIH-205	13	1 1/2	X					No	VT-3	No	
SIH-206	13	1 1/2	X					No	VT-3	Yes	
SIH-209	13	1 1/2	X					No	VT-3	No	
SIH-211	13	1 1/2		PSA-1/2			2 1/2	No	VT-3	No	1 1/4" - 2 1/4"
SIH-156	13	1 1/2		PSA-1/4			4"	No	VT-3,4	Yes	1" - 3 3/4"
SIH-157	13	1 1/2	X					No	VT-3	Yes	
SIH-158	13	1 1/2	X					No	VT-3	No	
SIH-159	13	1 1/2	X					No	VT-3	Yes	
SIH-160	13	1 1/2		PSA-1/4			4"	No	VT-3,4	Yes	1/4" - 2 1/2"
SIH-161	13	1 1/2		PSA-1/4			4"	No	VT-3,4	Yes	3/8" - 3 11/16"
SIH-162	13	1 1/2	X				4"	No	VT-3	Yes	7/16" - 3 3/4"
SIH-163	13	1 1/2		PSA-1/4				No	VT-3	Yes	
SIH-164	13	1 1/2		PSA-1/4			4"	No	VT-3,4	Yes	1/4" - 3 1/16"
SIH-165	12	1 1/2			BP-VS1B		1 1/8	No	VT-3	Yes	7/16" - 7/8"
SIH-545	13	1 1/2	X					No	VT-3	Yes	

TABLE G (CONTINUED)

COMPONENTS SUBJECT TO EXAMINATION CATEGORY

ASME CLASS 1 SUPPORTS

System	Dwg. No.	Table
UHI	ISI-0025-C	IWB

Support No.	Sheet No.	Support Type: Pipe Size	Restraint	Snubber	Spring	Anchor	Stroke	Integrally-Welded Attachment Size	Exam Required	Bolting	Acceptance Range
SIH-551	13	1 1/2		PSA-1/2			2 1/2	No	VT-3,4	Yes	1 1/4" - 2 1/4"
SIH-552	13	1 1/2		PSA-1/2			2 1/2	No	VT-3,4	Yes	1/4" - 1 7/16"
UHIH-040	1	8	X					No	VT-3	Yes	
UHIH-043	1	8	X					No	VT-3	Yes	
UHIH-044	1	8	X					No	VT-3	No	
UHIH-045	1	8	X					No	VT-3	Yes	
UHIH-063	1	8		PSA-35			6"	No	VT-3,4	Yes	1 1/16" - 5 3/4"
UHIH-064	1	8		PSA-35			6"	No	VT-3,4	Yes	1 3/16" - 5 3/4"
UHIH-065	1	8	X					No	VT-3	Yes	
UHIH-066	1	8	X					No	VT-3	No	
UHIH-067	1	8		PSA-3			5"	No	VT-3,4	Yes	1/4" - 3 7/8"
47W435-17-13	1	8		PSA-1 (2)			4"	Yes (8 lugs 1/2" thick)	VT-3,4	No	1/4" - 3 11/16"
UHIH-068	1	8		PSA-1			4"	No	VT-3,4	Yes	1/4" - 2 1/2"
UHIH-069	1	8			BP-VS1F-12		1 1/8	No	VT-3,4	Yes	3/8" - 7/8"

TABLE G (CONTINUED)

COMPONENTS SUBJECT TO EXAMINATION CATEGORY

ASME CLASS 1 SUPPORTS

System	Dwg. No.	Table
UHI	ISI-0025-C	IWB

Support No.	Sheet No.	Support Type: Pipe Size	Restraint	Snubber	Spring	Anchor	Stroke	Integrally-Welded Attachment Size	Exam Required	Bolting	Acceptance Range
UHIH-070	1	8		PSA-3			5"	No	VT-3,4	Yes	1/4" - 4 7/16"
UHIH-071	1	8		PSA-10			6"	No	VT-3,4	Yes	1/4" - 5 5/16"
UHIH-072	1	8			BP-VS4C-11		4 1/2	No	VT-3,4	Yes	1 1/8" - 4 1/4"
UHIH-073	1	8		PSA-10			6"	No	VT-3,4	Yes	1 1/8" - 5 3/4"
UHIH-074	1	8		PSA-3			5"	No	VT-3,4	Yes	1 7/16" - 4 3/4"
UHIH-075	1	8	X					No	VT-3	No	
UHIH-079	1	5		PSA-3			5"	No	VT-3,4	Yes	9/16" - 4 3/4"
UHIH-084	1	2	X					No	VT-3	Yes	
UHIH-085	1	2	X					No	VT-3	Yes	
UHIH-180	1	5		PSA-10			6"	No	VT-3,4	Yes	1/2" - 5 3/4"
UHIH-046	2	8	X					No	VT-3	No	
UHIH-047	2	8	X					No	VT-3	No	
UHIH-048	2	8	X					No	VT-3	No	
UHIH-049	2	8	X					No	VT-3	No	
UHIH-050	2	8	X					No	VT-3	No	

TABLE G (CONTINUED)

COMPONENTS SUBJECT TO EXAMINATION CATEGORY

ASME CLASS 1 SUPPORTS

System	Dwg. No.	Table
UHI	ISI-0025-C	IWB

Support No.	Sheet No.	Support Type: Pipe Size	Restraint	Snubber	Spring	Anchor	Stroke	Integrally-Welded Attachment Size	Exam Required	Bolting	Acceptance Range
UHIH-051	2	8		PSA-1			4"	No	VT-3,4	Yes	1/4" - 2 5/8"
UHIH-055	2	8		PSA-3			5"	No	VT-3,4	Yes	1/4" - 3 1/4"
UHIH-057	2	8		PSA-3			5"	No	VT-3,4	Yes	9/16" - 4 3/4"
UHIH-058	2	8		PSA-3			5"	No	VT-3,4	Yes	2 1/2" - 4 3/4"
UHIH-059	2	8		PSA-35			6"	No	VT-3,4	Yes	1" - 5 3/4"
UHIH-060	2	8		PSA-10			6"	No	VT-3,4	Yes	7/16" - 5 3/4"
UHIH-061	2	5		PSA-10			6"	No	VT-3,4	Yes	7/16" - 5 3/4"
UHIH-062	2	5		PSA-3			5"	No	VT-3,4	Yes	1/2" - 4 3/4"
UHIH-076	2	8			BP-CSV-LB1(2)		3"	No	VT-3	Yes	1 7/16" - 2 3/4"
UHIH-077	2	8		PSA-3			5"	No	VT-3,4	Yes	1 3/16" - 4 3/4"
UHIH-078	2	8	X					No	VT-3	No	
UHIH-001	3	12	X					No	VT-3	Yes	
UHIH-002	3	12	X					No	VT-3	Yes	
UHIH-003	3	12	X					No	VT-3	Yes	
UHIH-004	3	12	X					No	VT-3	Yes	

TABLE G (CONTINUED)

COMPONENTS SUBJECT TO EXAMINATION CATEGORY

ASME CLASS 1 SUPPORTS

System	Dwg. No.	Table
UHI	ISI-0025-C	IWB

Support No.	Sheet No.	Support Type: Pipe Size	Restraint	Snubber	Spring	Anchor	Stroke	Integrally-Welded Attachment Size	Exam Required	Bolting	Acceptance Range
UHIH-005	3	12	X					No	VT-3	Yes	
UHIH-006	3	12	X					No	VT-3	No	
UHIH-007	3	12	X					No	VT-3	Yes	
UHIH-024	3	5		PSA-10			6"	No	VT-3,4	Yes	9/16" - 5 3/4"
UHIH-025	3	5		PSA-10			6"	No	VT-3,4	Yes	11/16" - 5 3/4"
UHIH-026	3	8	X					No	VT-3	No	
UHIH-027	3	8	X					No	VT-3	No	
UHIH-028	3	8		PSA-3			5"	No	VT-3,4	Yes	1/4" - 3 15/16"
UHIH-029	3	8		PSA-3			5"	No	VT-3,4	Yes	
UHIH-033	3	8		PSA-10			6"	No	VT-3,4	Yes	2 1/2" - 5 3/4"
UHIH-034	3	8			BP-VS46B-9		4 1/2	No	VT-3	Yes	1/4" - 3 7/32"
UHIH-036	3	8		PSA-35			6"	No	VT-3,4	Yes	15/16" - 5 3/4"
UHIH-039	3	8			BP-VS26-10		2 1/4	No	VT-3,4	Yes	3/4" - 2"
UHIH-087	3	2	X					No	VT-3	Yes	
UHIH-31	3	8		PSA-10			6"	Yes (2 lug 1/2" thick)	VT-3,4	Yes	1/4" - 5 1/8"

TABLE G (CONTINUED)

COMPONENTS SUBJECT TO EXAMINATION CATEGORY

ASME CLASS 1 SUPPORTS

System	Dwg. No.	Table
UHI	ISI-0025-C	IWB

Support No.	Sheet No.	Support Type: Pipe Size	Restraint	Snubber	Spring	Anchor	Stroke	Integrally-Welded Attachment Size	Exam Required	Bolting	Acceptance Range
UHIH-30	3	8		PSA-3			5"	No	VT-3,4	Yes	7/16" - 4 3/4"
UHIH-38	3	8	X					No	VT-3	Yes	
UHIH-150	3	8		PSA-35			6"	No	VT-3,4	Yes	3/4" - 5 3/4"
UHIH-008	4	8	X					No	VT-3	Yes	
UHIH-009	4	8	X					No	VT-3	Yes	
UHIH-010	4	8	X					No	VT-3	No	
UHIH-011	4	8	X					No	VT-3	No	
UHIH-020	4	8	X					No	VT-3	No	
UHIH-012	4	8		PSA-3			5"	No	VT-3,4	Yes	1/4" - 3 7/8"
UHIH-013	4	8		PSA-3			5"	No	VT-3,4	Yes	1/4" - 4 9/16"
UHIH-014	4	8			BP-VS1F-14		1 1/8	No	VT-3	Yes	7/16" - 7/8"
UHIH-015	4	8		PSA-3			5"	No	VT-3,4	Yes	1/4" - 1 5/16"
UHIH-016	4	8			BP-VS2F-8(2)		2 1/4	No	VT-3	Yes	1" - 2"
UHIH-018	4	8		PSA-3			5"	No	VT-3,4	Yes	5/16" - 3 7/16"
UHIH-021	4	8		PSA-35			6"	No	VT-3,4	Yes	1 9/16" - 5 3/4"

TABLE G (CONTINUED)

COMPONENTS SUBJECT TO EXAMINATION CATEGORY

ASME CLASS 1 SUPPORTS

System	Dwg. No.	Table
CVC	ISI-0026-C	IWB

Support No.	Sheet No.	Support Type: Pipe Size	Restraint	Snubber	Spring	Anchor	Stroke	Integrally-Welded Attachment Size	Exam Required	Bolting	Acceptance Range
UHIH-022	4	5		PSA-10			6"	No	VT-3,4	Yes	11/16" - 5 3/4"
UHIH-023	4	5		PSA-3			5"	No	VT-3,4	Yes	3/4" - 4 3/4"
UHIH-035	4	8	X					No	VT-3	Yes	
UHIH-037	4	8		PSA-35			6"	No	VT-3,4	Yes	1 3/8" - 5 3/4"
CVCH-290	1	3			BP-3400		4 1/2	No	VT-3,4	Yes	1/4" - 3 1/8"
CVCH-291	1	3		PSA-1			4"	No	VT-3,4	Yes	2 5/16" - 3 3/4"
CVCH-292	1	3		PSA-1			4"	No	VT-3,4	Yes	1/4" - 5/16"
CVCH-293	1	3	X					No	VT-3	Yes	
CVCH-294	1	3		PSA-1			4"	No	VT-3,4	Yes	1/4" - 3 1/2"
CVCH-295	1	3		PSA-1			4"	No	VT-3,4	Yes	1/4" - 2 3/8"
CVCH-296	1	3	X					No	VT-3	Yes	
CVCH-297	1	3	X					No	VT-3	Yes	
CVCH-298	1	3	X					No	VT-3	Yes	
CVCH-299	1	3	X					No	VT-3	Yes	
CVCH-300	1	3	X					No	VT-3	Yes	

TABLE G (CONTINUED)

COMPONENTS SUBJECT TO EXAMINATION CATEGORY

ASME CLASS 1 SUPPORTS

System	Dwg. No.	Table
CVC	ISI-0026-C	IWB

Support No.	Sheet No.	Support Type: Pipe Size	Restraint	Snubber	Spring	Anchor	Stroke	Integrally-Welded Attachment Size	Exam Required	Bolting	Acceptance Range
CVCH-301	1	3	X					No	VT-3	Yes	
CVCH-302	1	3	X					No	VT-3	Yes	
CVCH-304	1	3	X					No	VT-3	Yes	
CVCH-305	1	3		PSA-3			5"	No	VT-3,4	Yes	5/8" - 4 3/4"
CVCH-306	1	3	X					No	VT-3	Yes	
CVCH-307	1	3	X					No	VT-3	Yes	
CVCH-310	1	3	X					No	VT-3	Yes	
CVCH-366	1	3		PSA-1 (2)			4"	No	VT-3,4	Yes	1/4" - 2 3/16"
CVCH-563	1	3		PSA-1/4			4"	No	VT-3,4	Yes	1/4" - 3 1/16"
RCH-42	2	2		PSA-1/2			2 1/2"	No	VT-3,4	Yes	1 1/4" - 2 1/4"
RCH-43	2	2			BE402B-3		2 1/2"	No	VT-3,4	Yes	1 1/2" - 2 1/4"
RCH-44	2	2		PSA-1/2			2 1/2"	No	VT-3,4	Yes	9/16" - 2 3/16"
RCH-45	2	2		PSA-1/4			4"	No	VT-3	Yes	1 1/8" - 3 1/4"
RCH-46	2	2	X					No	VT-3	No	
RCH-47	2	2	X					No	VT-3	No	

TABLE G (CONTINUED)

COMPONENTS SUBJECT TO EXAMINATION CATEGORY

ASME CLASS 1 SUPPORTS

System	Dwg. No.	Table
CVC	ISI-0063-C	IWB

Support No.	Sheet No.	Support Type: Pipe Size	Restraint	Snubber	Spring	Anchor	Stroke	Integrally-Welded Attachment Size	Exam Required	Bolting	Acceptance Range
CVCH-331	2	2				X		No	VT-3	Yes	
CVCH-383	2	2	X					No	VT-3	Yes	
CVCH-384	2	2		PSA-1/4"			4"	No	VT-3,4	Yes	5/16" - 3 3/4"
CVCH-385	2	2			BP-VS1B-6		1 1/8	No	VT-3,4	Yes	5/16" - 7/8"
CVCH-1	1	2	X					No	VT-3	Yes	
CVCH-2	1	2		PSA-1/4			4"	No	VT-3,4	Yes	2 11/16" - 3 3/4"
CVCH-3	1	2	X					No	VT-3	Yes	
CVCH-4	1	2		PSA-1/4			4"	No	VT-3,4	Yes	15/16" - 3 3/4"
CVCH-5	1	2	X					No	VT-3	Yes	
CVCH-6	1	2		PSA-1/4			4"	No	VT-3,4	Yes	2 3/16" - 3 3/4"
CVCH-7	1	2	X					No	VT-3	Yes	
47A406-8-56	1	2		PSA-1/4			4"	No	VT-3,4	Yes	1 3/4" - 3 3/4"
CVCH-30	2	2	X					No	VT-3	Yes	
CVCH-31	2	2		PSA-1			4"	No	VT-3,4	Yes	1/4" - 2 1/2"

TABLE G (CONTINUED)

COMPONENTS SUBJECT TO EXAMINATION CATEGORY

ASME CLASS 1 SUPPORTS

System	Dwg. No.	Table
CVC	ISI-0063-C	IWB

Support No.	Sheet No.	Support Type: Pipe Size	Restraint	Snubber	Spring	Anchor	Stroke	Integrally-Welded Attachment Size	Exam Required	Bolting	Acceptance Range
CVCH-32	2	2		PSA-1/4			4"	No	VT-3	Yes	5/16" - 3 3/4"
CVCH-33	2	2		PSA-1/4			4"	No	VT-3,4	Yes	1/2" - 3 3/4"
CVCH-34	2	2		PSA-1/4			4"	No	VT-3,4	Yes	1 1/2" - 3 3/4"
CVCH-35	2	2	X					No	VT-3	Yes	
CVCH-37	2	2	X					No	VT-3	Yes	
CVCH-38	2	2	X					No	VT-3	No	
CVCH-64	2	2		PSA-1/4			4"	No	VT-3,4	Yes	3/4" - 3 3/4"
CVCH-65	2	2		PSA-1/4			4"	No	VT-3,4	Yes	3/4" - 3 3/4"
CVCH-67	2	2	X					No	VT-3	Yes	
CVCH-70	3	2			BP-VS2A-13		2 1/4	No	VT-3,4	Yes	5/16" - 2"
CVCH-71	3	2	X					No	VT-3	Yes	
CVCH-72	3	2	X					No	VT-3	Yes	
CVCH-73	3	2	X					No	VT-3	Yes	
CVCH-74	3	2	X					No	VT-3	Yes	
CVCH-95	3	2		PSA-1/2			2 1/2	No	VT-3,4	Yes	2 1/4" - 2 3/8"

TABLE G (CONTINUED)

COMPONENTS SUBJECT TO EXAMINATION CATEGORY

ASME CLASS 1 SUPPORTS

System	Dwg. No.	Table
CVC	ISI-0063-C	IWB

Support No.	Sheet No.	Support Type: Pipe Size	Restraint	Snubber	Spring	Anchor	Stroke	Integrally-Welded Attachment Size	Exam Required	Bolting	Acceptance Range
CVCH-100	4	2	X					No	VT-3	No	
CVCH-101	4	2		PSA-1/4			4"	No	VT-3,4	Yes	2 1/8" - 3 3/4"
CVCH-102	4	2		PSA-1/4			4"	No	VT-3,4	Yes	7/8" - 3 3/4"
CVCH-103	4	2	X					No	VT-3	No	
CVCH-105	4	2		PSA-1/4			4"	No	VT-3,4	Yes	2" - 3 3/4"
CVCH-106	4	2	X					No	VT-3	No	
CVCH-107	4	2	X					No	VT-3	Yes	
CVCH-108	4	2	X					No	VT-3	Yes	
CVCH-109	4	2	X					No	VT-3	No	

TABLE G (CONTINUED)

COMPONENTS SUBJECT TO EXAMINATION CATEGORY

ASME CLASS 1 SUPPORTS

System	Dwg. No.	Table
RC	ISI-0124-C-1	IWB

Support No.	Sheet No.	Support Type: Pipe Size	Restraint	Snubber	Spring	Anchor	Stroke	Integrally-Welded Attachment Size	Exam Required	Bolting	Acceptance Range
RCH-1	1	14"			BP-VS4A-17		4 1/2	No	VT-3,4	Yes	7/16" - 4 1/4"
RCH-2	1	14"		PSA-3			5" (north)	No	VT-3,4	Yes	9/16" - 4 1/4"
				PSA-10			6" (south)				9/16" - 5 1/4"
RCH-3	1	14"		PSA-10			6"	No	VT-3,4	Yes	3/8" - 5 3/4"
RCH-4	1	14"		PSA-10			6"	No	VT-3,4	Yes	1/4" - 5 5/8"
RCH-5	1	14"			BP-VS2B-16		2 1/4	No	VT-3,4	Yes	1/4" - 1 7/8"
RCH-6	1	14"		PSA-35			6"	No	VT-3,4	Yes	7/8" - 5 9/16"

TABLE H

COMPONENTS SUBJECT TO EXAMINATION CATEGORY

ASME CLASS 2 SUPPORTS

System	Dwg. No.	Table
MS	ISI-0011-C	IWC

Support No.	Sheet No.	Support Type: Pipe Size	Restraint	Snubber	Spring	Anchor	Stroke	Integrally-Welded Attachment Size	Exam Required	Bolting	Acceptance Range
MSH-300	1	32		PSA-100			6"	No	VT-3,4	Yes	1 1/8" - 5 3/4"
MSH-301	1	32		PSA-100			6"	No	VT-3,4	Yes	1/4" - 4 3/8"
MSH-302	1	32			BP-VS4B(2)		4 1/2	Yes 1" lug	VT-3,4, ST	Yes	2 1/16 - 4 1/4"
MSH-303	1	32		PSA-35(2)			6"	Yes 1" lug	VT-3,4, ST	Yes	1 3/4" - 5 3/4"
MSH-304	1	32		PSA-35(2)			6"	No	VT-3	Yes	1/4" - 5 7/16"
MSH-305	1	32			BP-VS4A		4 1/2	No	VT-3,4	Yes	1/2" - 4 1/4"
MSH-306	1	32	X					No	VT-3,4	Yes	
MSH-307	1	32		PSA-10			6"	No	VT-3,4	Yes	1 1/16" - 5 3/4"
MSH-308	1	32		PSA-100(2)			6"	No	VT-3,4	Yes	3/4" - 5 9/16"
MSH-309	1	32			BP-VS2B		2 1/4	No	VT-3	Yes	1/4" - 1 21/32"
MSH-310	1	32	X					No	VT-3	Yes	
MSH-311	1	32	X					No	VT-3	Yes	
MSH-312	1	32		PSA-100			6"	No	VT-3,4	Yes	5/8" - 5 5/8"
MSH-313	1	32		PSA-10			6"	No	VT-3,4	Yes	1/4" - 4 5/8"
MSH-315	1	32	X					No	VT-3	Yes	

TABLE H (CONTINUED)

COMPONENTS SUBJECT TO EXAMINATION CATEGORY

ASME CLASS 2 SUPPORTS

System	Dwg. No.	Table
MS	ISI-0011-C	IWC

Support No.	Sheet No.	Support Type: Pipe Size	Restraint	Snubber	Spring	Anchor	Stroke	Integrally-Welded Attachment Size	Exam Required	Bolting	Acceptance Range
MSH-340	2	32		PSA-100			6"	No	VT-3,4	Yes	15/16" - 5 3/4"
MSH-341	2	32		PSA-100			6"	No	VT-3,4	Yes	1/4" - 4 5/8"
MSH-342	2	32			BP-3400(2)		4 1/2	Yes 1" lug	VT-3,4, ST	Yes	2" - 4 1/4"
MSH-343	2	32		PSA-35(2)			6"	Yes 1" lug	VT-3,4. ST	Yes	1 3/4" - 5 3/4"
MSH-344	2	32			BP-VS4D		4 1/2	No	VT-3,4	Yes	1/2" - 4 1/4"
MSH-345	2	32	X					No	VT-3	Yes	
MSH-346	2	32		PSA-35(2)			6"	No	VT-3,4	Yes	1/4" - 5 3/4"
MSH-347	2	32	X					No	VT-3	Yes	
MSH-348	2	32		PSA-10(2)			6"	No	VT-3,4	Yes	1 1/16" - 5 3/4"
MSH-349	2	32		PSA-100			6"	No	VT-3,4	Yes	1/4" - 5 9/16"
MSH-350	2	32		PSA-10			6"	No	VT-3,4	Yes	1/4" - 4 1/2"
MSH-352	2	32	X					No	VT-3	No	
MSH-380	3	32		PSA-100			6"	No	VT-3,4	Yes	15/16" - 5 3/4"
MSH-381	3	32		PSA-100			6"	No	VT-3,4	Yes	1/4" - 4 5/8"
MSH-382	3	32			BP-VS4B		4 1/2	Yes 1" lug	VT-3,4, ST	Yes	2 1/16" - 4 1/4"

TABLE H (CONTINUED)

COMPONENTS SUBJECT TO EXAMINATION CATEGORY

ASME CLASS 2 SUPPORTS

System	Dwg. No.	Table
MS	ISI-0011-C	IWC

Support No.	Sheet No.	Support Type: Pipe Size	Restraint	Snubber	Spring	Anchor	Stroke	Integrally-Welded Attachment Size	Exam Required	Bolting	Acceptance Range
MSH-383	3	32		PSA-35			6"	Yes 1" lug	VT-3,4. ST	Yes	1 5/8" - 5 3/4"
MSH-384	3	32			BP-VS26-B		2 1/4	No	VT-3,4	Yes	5/8" - 2"
MSH-385	3	32	X					No	VT-3	Yes	
MSH-386	3	32			BP-VS4A		4 1/2	No	VT-3,4	Yes	1/4" - 3 3/8"
MSH-387	3	32		PSA-35			6"	No	VT-3,4	Yes	1 11/16" - 5 3/4"
MSH-388	3	32	X					No	VT-3	Yes	
MSH-389	3	32		PSA-3	BP-VS2F		5" 2 1/4	No	VT-3,4	Yes	13/16" - 4 3/4" 1/4" - 1 7/16"
MSH-391	3	32		PSA-100			6"	No	VT-3,4	Yes	1/4" - 5 1/2"
MSH-392	3	32		PSA-10			6"	No	VT-3,4	Yes	2" - 5 3/4"
MSH-394	3	32	X					No	VT-3	Yes	
MSH-420	4	32		PSA-100			6"	No	VT-3,4	Yes	11/16" - 5 3/4"
MSH-421	4	32		PSA-100			6"	No	VT-3,4	Yes	1/4" - 4 5/16"
MSH-422	4	32			BP-VS4B		4 1/2	Yes 1" lug	VT-3,4, ST	Yes	2 3/16" - 4 1/4"
MSH-423	4	32		PSA-35			6"	Yes 1" lug	VT-3,4, ST	Yes	1 3/4" - 5 3/4"
MSH-424	4	32	X					No	VT-3	Yes	

TABLE H (CONTINUED)

COMPONENTS SUBJECT TO EXAMINATION CATEGORY

ASME CLASS 2 SUPPORTS

System	Dwg. No.	Table
MS	ISI-0011-C	IWC

Support No.	Sheet No.	Support Type: Pipe Size	Restraint	Snubber	Spring	Anchor	Stroke	Integrally-Welded Attachment Size	Exam Required	Bolting	Acceptance Range
MSH-425	4	32			BP-VS46B(2)		4 1/2	No	VT-3,4	Yes	5/8" - 4 1/4"
MSH-426	4	32	X					No	VT-3	Yes	
MSH-427	4	32			BP-VS4A		4 1/2	No	VT-3,4	Yes	1/4" - 3 5/16"
MSH-428	4	32		PSA-100			6"	No	VT-3,4	Yes	1/4" - 5 5/16"
MSH-429	4	32		PSA-35			6"	No	VT-3,4	Yes	3/4" - 5 3/4"
MSH-430	4	32	X					No	VT-3,4	Yes	
MSH-431	4	32			BP-VS2F		2 1/4	No	VT-3,4	Yes	1/4" - 1 1/2"
MSH-432	4	32	X					No	VT-3	Yes	
MSH-434	4	32		PSA-100			6"	No	VT-3,4	Yes	1/4" - 5 1/2"
MSH-435	4	32		PSA-10			6"	No	VT-3,4	Yes	1 9/16" - 5 3/4"
MSH-437	4	32	X					No	VT-3	Yes	

TABLE H (CONTINUED)

COMPONENTS SUBJECT TO EXAMINATION CATEGORY

ASME CLASS 2 SUPPORTS

System	Dwg. No.	Table
RHR	ISI-0020-C	IWC

Support No.	Sheet No.	Support Type: Pipe Size	Restraint	Snubber	Spring	Anchor	Stroke	Integrally-Welded Attachment Size	Exam Required	Bolting	Acceptance Range
RHRH-1	1	10	X					No	VT-3	Yes	
RHRH-4	1	14	X					No	VT-3	Yes	
47A432-2-1	2	14		PSA-3			5"	No	VT-3,4	Yes	1/4" - 3 13/16"
47A432-6-2	2	14	X					No	VT-3	Yes	
47A432-6-1	2	14		PSA-3			5"	No	VT-3,4	Yes	7/16" - 4 3/4"
SIH-V132	2	14			BP-VS2F		2 1/4	No	VT-3	Yes	5/16" - 2"
SIH-R133	2	14	X					No	VT-3	No	
SIH-V134	2	14			BP-3100		1 1/8	No	VT-3	Yes	1/4 - 7/8"
SIH-R135	2	14	X					No	VT-3	Yes	
SIH-R157	2	14	X					No	VT-3	No	
SIH-V158	2	14			BP-3100F		1 1/8	No	VT-3,4	Yes	3/8" - 7/8"
SIH-R159	2	14	X					No	VT-3	Yes	
SIH-R177	2	14	X					No	VT-3	Yes	
SIH-R178	2	14	X					No	VT-3	Yes	

TABLE H (CONTINUED)

COMPONENTS SUBJECT TO EXAMINATION CATEGORY

ASME CLASS 2 SUPPORTS

System	Dwg. No.	Table
RHR	ISI-0020-C	IWC

Support No.	Sheet No.	Support Type: Pipe Size	Restraint	Snubber	Spring	Anchor	Stroke	Integrally-Welded Attachment Size	Exam Required	Bolting	Acceptance Range
SIH-V179	2	14			BP-VS2B		2 1/4	No	VT-3	Yes	7/16" - 2"
SIH-V180	2	14			BP-VS2B		2 1/4	No	VT-3	Yes	3/8" - 2"
SIH-R181	2	14	X					No	VT-3	Yes	
SIH-R182	2	14	X					No	VT-3	Yes	
47A432-1-5	3	14		PSA-3(2)			5"	No	VT-3,4	Yes	1 1/16" - 4 5/8"
SIH-V136	3	14			BP-VS2F		2 1/4	No	VT-3,4	Yes	5/16" - 2"
SIH-R142	3	14		PSA-3			5"	No	VT-3,4	Yes	3/8" - 4 3/4"
SIH-V145	3	14			BP-VS2C		2 1/4	No	VT-3,4	Yes	1/4" - 2"
SIH-R146	3	14		PSA-3			5"	No	VT-3,4	Yes	5/16" - 4 11/16"
SIH-R147	3	14		PSA-10			5"	No	VT-3,4	Yes	11/16" - 4 3/4"
SIH-R148	3	14		PSA-3			6"	No	VT-3,4	Yes	3/8" - 5 5/16"
SIH-R149	3	14		PSA-3			5"	No	VT-3,4	Yes	9/32" - 4 3/4"
SIH-R137	3	14	X					No	VT-3	Yes	
SIH-R138	3	14	X					No	VT-3	Yes	
SIH-V139	3	14			BP-3100		1 1/8	No	VT-3	Yes	1/4" - 11/16"

TABLE H (CONTINUED)

COMPONENTS SUBJECT TO EXAMINATION CATEGORY

ASME CLASS 2 SUPPORTS

System	Dwg. No.	Table
RHR	ISI-0020-C	IWC

Support No.	Sheet No.	Support Type: Pipe Size	Restraint	Snubber	Spring	Anchor	Stroke	Integrally-Welded Attachment Size	Exam Required	Bolting	Acceptance Range
SIH-R140	3	14	X					No	VT-3	Yes	
SIH-R141	3	14	X					No	VT-3	Yes	
SIH-V143	3	14			BP-VS2C		2 1/4	No	VT-3	Yes	3/8" - 2"
47A432-1-7	3	14	X					No	VT-3	Yes	
47A432-1-6	3	14	X					No	VT-3	Yes	
SIH-R144	3	14	X					No	VT-3	Yes	
SIH-V150	3	14			BP-VS2C		2 1/4	No	VT-3	Yes	1/4" - 2"
SIH-R151	3	14		PSA-3			5"	No	VT-3,4	Yes	1/4" - 3 5/8"
SIH-R152	3	14	X					No	VT-3	Yes	
SIH-R153	3	14	X					No	VT-3	Yes	
SIH-R155	3	14		PSA-35			6"	No	VT-3,4	Yes	1/4" - 4 1/2"
SIH-R161	3	14	X					No	VT-3	Yes	
SIH-R162	3	14	X					No	VT-3	Yes	
SIH-V163	3	14			BP-VS2F-11		2 1/4	No	VT-3	Yes	1/4" - 1 15/16"

TABLE H (CONTINUED)

COMPONENTS SUBJECT TO EXAMINATION CATEGORY

ASME CLASS 2 SUPPORTS

System	Dwg. No.	Table
RHR	ISI-0020-C	IWC

Support No.	Sheet No.	Support Type: Pipe Size	Restraint	Snubber	Spring	Anchor	Stroke	Integrally-Welded Attachment Size	Exam Required	Bolting	Acceptance Range
SIH-R164	3	14	X					No	VT-3	Yes	
SIH-R165	3	14	X					No	VT-3	Yes	
SIH-V166	3	14			BP-VS2C		2 1/4	No	VT-3	Yes	3/8" - 2"
SIH-R168	3	14		PSA-3			5"	No	VT-3,4	Yes	1/4" - 4 5/8"
SIH-R169	3	14	X					No	VT-3,4	Yes	
SIH-R170	3	14		PSA-10			6"	No	VT-3,4	Yes	9/16" - 4 1/8"
SIH-R171	3	14	X					No	VT-3	Yes	
SIH-R173	3	14		PSA-35			6"	No	VT-3,4	Yes	1/2" - 4"
SIH-R174	3	14		PSA-35(2)			6"	No	VT-3	Yes	7/16" - 5 1/8"
SIH-R175	3	14	X					No	VT-3,4	Yes	
RHRH-R37	4	8		PSA-3			5"	No	VT-3,4	Yes	1/4" - 4 3/8"
RHRH-V38	4	8			BP-VS4F		4 1/2	No	VT-3	Yes	5/16" - 4 1/4"
RHRH-R39	4	8	X					No	VT-3	Yes	
RHRH-R86	4	8	X					No	VT-3	Yes	
RHRH-V87	4	8			BP-VS2F(2)		2 1/4	No	VT-3	Yes	1/4" - 1 15/16"

TABLE H (CONTINUED)

COMPONENTS SUBJECT TO EXAMINATION CATEGORY

ASME CLASS 2 SUPPORTS

System	Dwg. No.	Table
RHR	ISI-0020-C	IWC

Support No.	Sheet No.	Support Type: Pipe Size	Restraint	Snubber	Spring	Anchor	Stroke	Integrally-Welded Attachment Size	Exam Required	Bolting	Acceptance Range
RHRH-R88	4	8		PSA-3			5"	No	VT-3,4	Yes	1/4" - 4 5/8"
RHRH-R89	4	8		PSA-1			4"	No	VT-3,4	Yes	3/8" - 3 3/4"
RHRH-V90	4	8			BP-VS2D		2 1/4	No	VT-3	Yes	1/4" - 2"
RHRH-R91	4	8	X					No	VT-3	Yes	
RHRH-R92	4	8	X					No	VT-3	Yes	
RHRH-R93	4	8	X					No	VT-3	Yes	
RHRH-R94	4	8	X					No	VT-3	Yes	
RHRH-R95	4	8		PSA-1			4"	No	VT-3,4	Yes	1 1/4" - 3 3/4"
RHRH-R96	4	8		PSA-1/2			2 1/2	No	VT-3,4	Yes	1 11/32" - 2 1/4"
RHRH-R97	4	8	X					No	VT-3	Yes	
RHRH-R98	4	8	X					No	VT-3	Yes	
RHRH-R99	4	8		PSA-1/4			4"	No	VT-3,4	Yes	1/4" - 3 21/32"
RHRH-R100	4	8		PSA-1/2			2 1/2	No	VT-3,4	Yes	9/16" - 2 1/4"
RHRH-R101	4	8	X					No	VT-3	Yes	
RHRH-R102	4	8	X					No	VT-3	Yes	

TABLE H (CONTINUED)

COMPONENTS SUBJECT TO EXAMINATION CATEGORY

ASME CLASS 2 SUPPORTS

System	Dwg. No.	Table
RHR	ISI-0020-C	IWC

Support No.	Sheet No.	Support Type: Pipe Size	Restraint	Snubber	Spring	Anchor	Stroke	Integrally-Welded Attachment Size	Exam Required	Bolting	Acceptance Range
RHRH-R40	5	8		PSA-3			5"	No	VT-3,4	Yes	1/4" - 4 9/16"
RHRH-V41	5	8			BP-VS2C		2 1/4	No	VT-3	Yes	3/4" - 2"
RHRH-R42	5	8	X					No	VT-3	Yes	
RHRH-R43	5	8		PSA-1/2			2 1/2	No	VT-3,4	Yes	1/4" - 2 1/16"
RHRH-R44	5	8	X					No	VT-3	Yes	
RHRH-V45	5	8			B268-F(2)		2 1/2	No	VT-3	Yes	1/4" - 2 1/4"
RHRH-R46	5	8		PSA-1/4(2)			4"	No	VT-3,4	Yes	3/8" - 3 3/4"
RHRH-R47	5	8		PSA-1/2			2 1/2	No	VT-3,4	Yes	1/4" - 2 1/8"
RHRH-R48	5	8		PSA-1			4"	No	VT-3,4	Yes	1/4" - 3 9/16"
RHRH-V49	5	8			BP-VS2D		2 1/4	No	VT-3	Yes	3/8" - 2"
RHRH-R50	5	8	X					No	VT-3	Yes	
RHRH-R51	5	8	X					No	VT-3	Yes	
RHRH-R52	5	8	X					No	VT-3	Yes	
RHRH-V53	5	8			BP-VS4C(2)		4 1/2	No	VT-3	Yes	1" - 4 1/4"
RHRH-R54	5	8	X					No	VT-3	Yes	

TABLE H (CONTINUED)

COMPONENTS SUBJECT TO EXAMINATION CATEGORY

ASME CLASS 2 SUPPORTS

System	Dwg. No.	Table
RHR	ISI-0020-C	IWC

Support No.	Sheet No.	Pipe Size	Support Type: Restraint	Support Type: Snubber	Support Type: Spring	Support Type: Anchor	Stroke	Integrally-Welded Attachment Size	Exam Required	Bolting	Acceptance Range
RHRH-R55	5	8		PSA-1/4(2)			4"	No	VT-3,4	Yes	1/4" - 2 15/16"
RHRH-R56	5	8	X					No	VT-3	Yes	
RHRH-R57	5	8		PSA-1/4(2)			4"	No	VT-3,4	Yes	1/4" - 2 5/8"
RHRH-R58	5	8		PSA-1/4(2)			4"	No	VT-3,4	Yes	1/4" - 2 5/8"
RHRH-R59	5	8	X					No	VT-3	Yes	
RHRH-R60	5	8	X					No	VT-3	Yes	
RHRH-R61	5	8		PSA-1/2(2)			2 1/2	No	VT-3,4	Yes	13/16" - 2 1/4"
RHRH-R63	5	8	X					No	VT-3	Yes	
RHRH-R64	5	8	X					No	VT-3	Yes	
RHRH-R3	6	8		PSA-1(2)			4"	No	VT-3,4	Yes	1/4" - 3 1/8"
RHRH-R4	6	8		X				No	VT-3,4	Yes	
RHRH-R5	6	8	X					No	VT-3	Yes	
RHRH-R6	6	8		PSA-1(2)			4"	No	VT-3,4	Yes	1/4" - 3 7/16"
RHRH-R7	6	8	X					No	VT-3	Yes	
RHRH-R8	6	8	X					No	VT-3	Yes	

TABLE H (CONTINUED)

COMPONENTS SUBJECT TO EXAMINATION CATEGORY

ASME CLASS 2 SUPPORTS

System	Dwg. No.	Table
RHR	ISI-0020-C	IWC

Support No.	Sheet No.	Support Type: Pipe Size	Restraint	Snubber	Spring	Anchor	Stroke	Integrally-Welded Attachment Size	Exam Required	Bolting	Acceptance Range
RHRH-R12	6	8	X					No	VT-3	Yes	
RHRH-R13	6	8	X					No	VT-3	Yes	
RHRH-R14	6	8		PSA-1/2(2)			2 1/2	No	VT-3,4	Yes	9/16" - 2 1/4"
RHRH-V15	6	8			BP-VS2C(2)		2 1/4	Yes 1/2"	VT-3,4	Yes	1/4" - 2"
RHRH-R16	6	8		PSA-1/2			2 1/2	No	VT-3,4	Yes	9/16" - 2 1/4"
RHRH-R17	6	8	X					No	VT-3	Yes	
RHRH-R18	6	8	X					No	VT-3	Yes	
RHRH-R19	6	8		PSA-1/2			2 1/2	No	VT-3,4	Yes	1/2" - 2 1/4"
RHRH-R20	6	8	X					No	VT-3	Yes	
RHRH-R21	6	8	X					No	VT-3	Yes	
RHRH-R22	6	12	X					No	VT-3	Yes	
RHRH-R23	6	12	X					No	VT-3	Yes	
RHRH-R24	6	12	X					No	VT-3	Yes	
RHRH-R25	6	12	X					No	VT-3	Yes	
RHRH-R26	6	12	X					No	VT-3	Yes	

TABLE H (CONTINUED)

COMPONENTS SUBJECT TO EXAMINATION CATEGORY

ASME CLASS 2 SUPPORTS

System	Dwg. No.	Table
RHR	ISI-0020-C	IWC

Support No.	Sheet No.	Support Type: Pipe Size	Restraint	Snubber	Spring	Anchor	Stroke	Integrally-Welded Attachment Size	Exam Required	Bolting	Acceptance Range
RHRH-R27	6	12	X					No	VT-3	Yes	
RHRH-R28	6	12		PSA-10			6"	No	VT-3	Yes	1/4" - 5 5/16"
RHRH-R29	6	12	X					No	VT-3	Yes	
RHRH-R10	6	8		PSA-3			5"	No	VT-3,4	Yes	1/4" - 4 7/16"
RHRH-V11	6	8			BP-VS2A		2 1/4	No	VT-3,4	Yes	1/2" - 2"
RHRH-R30	6	12	X					No	VT-3	Yes	
RHRH-R31	6	12	X					No	VT-3	Yes	
RHRH-R32	6	12	X					No	VT-3	Yes	
RHRH-R33	6	12	X					No	VT-3	Yes	
RHRH-R34	6	12	X					No	VT-3,4	Yes	
RHRH-R35	6	12	X					No	VT-3	Yes	
RHRH-R36	6	8		PSA-3			5"	No	VT-3,4	Yes	5/8" - 4 3/4"
47A432-1-1A	6	12	X					No	VT-3	Yes	
47A432-1-1B	6	12	X					No	VT-3	Yes	
SIH-363	7	12	X					No	VT-3	Yes	

TABLE H (CONTINUED)

COMPONENTS SUBJECT TO EXAMINATION CATEGORY

ASME CLASS 2 SUPPORTS

System	Dwg. No.	Table
RHR	ISI-0020-C	IWC

Support No.	Sheet No.	Support Type: Pipe Size	Restraint	Snubber	Spring	Anchor	Stroke	Integrally-Welded Attachment Size	Exam Required	Bolting	Acceptance Range
SIH-371	7	8		PSA-3			5"	No	VT-3,4	Yes	1 11/16" - 4 3/4"
SIH-372	7	8	X					No	VT-3	Yes	
SIH-373	7	8	X					No	VT-3	Yes	
SIH-374	7	8	X					No	VT-3	Yes	
SIH-375	7	8	X					No	VT-3	Yes	
SIH-376	7	8	X					No	VT-3	Yes	
SIH-377	7	8	X					No	VT-3	Yes	
SIH-378	7	8	X					No	VT-3	Yes	
SIH-379	7	8	X					No	VT-3	Yes	
SIH-347	8	8	X					No	VT-3	Yes	
SIH-349	8	8			BP-3100F		1 1/8	No	VT-3	Yes	5/8" - 7/8"
SIH-350	8	8	X					No	VT-3	Yes	
SIH-351	8	8	X					No	VT-3	Yes	
SIH-352	8	8	X					No	VT-3	Yes	
47A432-3-3	8	8		PSA-1/2			2 1/2	No	VT-3,4	Yes	3/4" - 2 1/4"

TABLE H (CONTINUED)

COMPONENTS SUBJECT TO EXAMINATION CATEGORY

ASME CLASS 2 SUPPORTS

System	Dwg. No.	Table
RHR	ISI-0020-C	IWC

Support No.	Sheet No.	Support Type: Pipe Size	Restraint	Snubber	Spring	Anchor	Stroke	Integrally-Welded Attachment Size	Exam Required	Bolting	Acceptance Range
SIH-353	8	8	X					No	VT-3	Yes	
SIH-354	8	8	X					No	VT-3	Yes	
SIH-355	8	8	X					No	VT-3	Yes	
SIH-356	8	8	X					No	VT-3	Yes	
SIH-357	8	8	X					No	VT-3	Yes	
SIH-358	8	8	X					No	VT-3	Yes	
SIH-359	8	8	X					No	VT-3	Yes	
SIH-360	8	8	X					No	VT-3	Yes	
SIH-361	8	8	X					No	VT-3	Yes	
SIH-362	8	8	X					No	VT-3	Yes	
SIH-589	8	8		PSA-3			5"	No	VT-3,4	Yes	15/16" - 4 3/4"
SIH-590	8	8		PSA-3			5"	No	VT-3,4	Yes	1/4" - 1 1/4"
SIH-591	8	8		PSA-10L			12"	No	VT-3,4	Yes	1/4" - 5 1/4"
SIH-592	8	8		PSA-1L			8"	No	VT-3,4	Yes	6 7/16" - 7 3/4"
SIH-593	8	8		PSA-3			5"	No	VT-3,4	Yes	1/4" - 1 9/16"

TABLE H (CONTINUED)

COMPONENTS SUBJECT TO EXAMINATION CATEGORY

ASME CLASS 2 SUPPORTS

System	Dwg. No.	Table
SIS	ISI-0021-C	IWC

Support No.	Sheet No.	Support Type: Pipe Size	Restraint	Snubber	Spring	Anchor	Stroke	Integrally-Welded Attachment Size	Exam Required	Bolting	Acceptance Range
RHRH-V121	1	8			BP-VS2F		2 1/4	No	VT-3	Yes	1/4" - 1 13/16"
RHRH-R122	1	8	X					No	VT-3	Yes	
RHRH-R134	1	8	X					No	VT-3	No	
RHRH-R211	2	8	X					No	VT-3	Yes	
RHRH-R212	2	8	X					No	VT-3	Yes	
RHRH-R213	2	8	X					Yes - 1/2"	VT-3	Yes	
RHRH-R214	2	8	X					No	VT-3	Yes	
RHRH-R215	2	8	X					No	VT-3	Yes	
RHRH-R216	2	8		PSA-1/2"			2 1/2	No	VT-3,4	Yes	9/32" - 1 3/4"
RHRH-R217	2	8	X					No	VT-3	Yes	
RHRH-R218	2	8	X					No	VT-3	No	
RHRH-R219	2	8	X					No	VT-3	Yes	
RHRH-R220	2	8	X					No	VT-3	Yes	
SIH-R129	1	16	X					No	VT-3	Yes	
SIH-R130	1	16	X					No	VT-3,4	Yes	
SIH-R131	1	16	X					No	VT-3,4	Yes	

TABLE H (CONTINUED)

COMPONENTS SUBJECT TO EXAMINATION CATEGORY

ASME CLASS 2 SUPPORTS

System	Dwg. No.	Table
SIS	ISI-0021-C	IWC

Support No.	Sheet No.	Support Type: Pipe Size	Restraint	Snubber	Spring	Anchor	Stroke	Integrally-Welded Attachment Size	Exam Required	Bolting	Acceptance Range
47A435-6-74	3	8		PSA-3			5"	No	VT-3,4	Yes	1/2" - 4 3/4"
SIH-051	3	8	X					No	VT-3	Yes	
SIH-052	3	8	X					No	VT-3	Yes	
SIH-053	3	8	X					No	VT-3	Yes	
SIH-054	3	8	X					No	VT-3	Yes	
SIH-055	3	8		PSA-3			5"	No	VT-3,4	Yes	2 3/8" - 4 3/4"
SIH-056	3	8	X					No	VT-3	Yes	
SIH-057	3	6	X					No	VT-3	Yes	
SIH-058	3	6	X					No	VT-3	Yes	
SIH-059	3	6	X					No	VT-3	Yes	
SIH-060	3	6	X					No	VT-3	Yes	
SIH-062	3	6		PSA-10			6"	No	VT-3,4	Yes	1 13/16" - 5 3/4"
SIH-069	3	6	X					No	VT-3	Later	
SIH-040	3	8	X					No	VT-3	Yes	
SIH-042	3	8		PSA-3			5"	No	VT-3	Yes	1/4" - 4 1/4"

TABLE H (CONTINUED)

COMPONENTS SUBJECT TO EXAMINATION CATEGORY

ASME CLASS 2 SUPPORTS

System	Dwg. No.	Table
SIS	ISI-0021-C	IWC

Support No.	Sheet No.	Support Type: Pipe Size	Restraint	Snubber	Spring	Anchor	Stroke	Integrally-Welded Attachment Size	Exam Required	Bolting	Acceptance Range
SIH-044	3	8	X					No	VT-3	Yes	
SIH-045	3	8	X					No	VT-3	Yes	
SIH-046	3	8	X					No	VT-3	Yes	
SIH-047	3	8	X					Yes 3/4"	VT-3, ST	Yes	
SIH-048	3	8	X					No	VT-3	Yes	
SIH-049	3	8	X					Yes - 3/4"	VT-3, ST	Yes	
SIH-050	3	8	X					No	VT-3	Yes	
SIH-077	3	6	X					No	VT-3	Yes	
SIH-078	3	6		PSA-3			5"	No	VT-3,4	Yes	1/4" - 3 7/16"
SIH-079	3	6		PSA-3			5"	No	VT-3,4	Yes	5/16" - 4 11/16"
SIH-063	3	6			BP-VS2B		2 1/4	No	VT-3	Yes	3/4" - 2"
SIH-064	3	6		PSA-3			5"	No	VT-3,4	Yes	1/4" - 4 1/8"
47A435-1-12	5	8	X					No	VT-3	Yes	
RHRH-R221	5	8	X					No	VT-3	Yes	
RHRH-R222	5	8	X					No	VT-3	Yes	

TABLE H (CONTINUED)

COMPONENTS SUBJECT TO EXAMINATION CATEGORY

ASME CLASS 2 SUPPORTS

System	Dwg. No.	Table
SIS	ISI-0021-C	IWC

Support No.	Sheet No.	Support Type: Pipe Size	Restraint	Snubber	Spring	Anchor	Stroke	Integrally-Welded Attachment Size	Exam Required	Bolting	Acceptance Range
RHRH-R223	5	8	X					No	VT-3	Yes	
RHRH-R224	5	8	X					No	VT-3	Yes	
RHRH-R225	5	8	X					No	VT-3	Yes	
RHRH-R226	5	8	X					No	VT-3	Yes	
RHRH-R227	5	8	X					No	VT-3	Yes	
RHRH-R228	5	8	X					No	VT-3	Yes	
RHRH-R230	5	8		PSA-1			4"	No	VT-3,4	Yes	1/4" - 3 9/16"
RHRH-R231	5	8	X					No	VT-3	Yes	
RHRH-R232	5	8		PSA-1			4"	No	VT-3,4	Yes	5/8" - 3 3/4"
RHRH-R233	5	8	X					No	VT-3	Yes	
SIH-13	6	6			BP-VS4B		4 1/2	No	VT-3	Yes	15/16" - 4 1/4"
SIH-14	6	6		PSA-3			5"	No	VT-3,4	Yes	1 1/8" - 4 3/4"
SIH-15	6	6	X					No	VT-3	Yes	
SIH-16	6	6			BP-CSH		2 1/2	No	VT-3	Yes	1 7/16" - 2 1/4"
SIH-17	6	6		PSA-3			5"	No	VT-3,4	Yes	1/2" - 4 3/4"

TABLE H (CONTINUED)

COMPONENTS SUBJECT TO EXAMINATION CATEGORY

ASME CLASS 2 SUPPORTS

System	Dwg. No.	Table
SIS	ISI-0021-C	IWC

Support No.	Sheet No.	Support Type: Pipe Size	Restraint	Snubber	Spring	Anchor	Stroke	Integrally-Welded Attachment Size	Exam Required	Bolting	Acceptance Range
SIH-18	6	6		PSA-3			5"	No	VT-3,4	Yes	1 5/16" - 4 3/4"
SIH-19	6	6		PSA-3			5"	No	VT-3,4	Yes	3 3/8" - 4 3/4"
SIH-20	6	6			BP-VS4F		4 1/2	No	VT-3	Yes	1 11/16" - 4 1/4"
SIH-21	6	6		PSA-3			5"	No	VT-3,4	Yes	1/4" - 2 3/4"
SIH-22	6	6		PSA-3			5"	No	VT-3,4	Yes	4 3/16" - 4 3/4"
SIH-23	6	6		PSA-3			5"	No	VT-3,4	Yes	1/4" - 4 1/4"
SIH-24	6	6		PSA-3			5"	No	VT-3,4	Yes	1 7/16" - 4 3/4"
SIH-25	6	6	X					No	VT-3	Yes	
SIH-26	6	8			BP-VS4B		4 1/2	No	VT-3	Yes	1" - 4 1/4"
SIH-27	6	8	X					No	VT-3	Yes	
SIH-28	6	8			BP-VS4C		4 1/2	No	VT-3	Yes	1 1/8" - 4 1/4"
SIH-29	6	8		PSA-1			4"	No	VT-3,4	Yes	1/4" - 3"
SIH-30	6	8		PSA-3			5"	No	VT-3,4	Yes	1/4" - 4 3/8"
SIH-31	6	8		PSA-3			5"	No	VT-3,4	Yes	1 1/8" - 3 7/8"
SIH-32	6	8		PSA-3			5"	No	VT-3,4	Yes	3/8" - 3 7/16"
SIH-33	6	8	X					No	VT-3	Yes	

TABLE H (CONTINUED)

COMPONENTS SUBJECT TO EXAMINATION CATEGORY

ASME CLASS 2 SUPPORTS

System	Dwg. No.	Table
UHI	ISI-0025-C	IWC

Support No.	Sheet No.	Support Type: Pipe Size	Restraint	Snubber	Spring	Anchor	Stroke	Integrally-Welded Attachment Size	Exam Required	Bolting	Acceptance Range
UHIH-100	5	12	X					No	VT-3	Yes	
UHIH-102	5	12	X					No	VT-3	Yes	
UHIH-105	5	12	X					No	VT-3	Yes	
UHIH-107	5	12	X					No	VT-3	Yes	
UHIH-108	5	12	X					Yes - 3/4"	VT-3, ST	Yes	
UHIH-109	5	12	X					Yes - 3/4"	VT-3, ST	Yes	

TABLE H (CONTINUED)

COMPONENTS SUBJECT TO EXAMINATION CATEGORY

ASME CLASS 2 SUPPORTS

System	Dwg. No.	Table
FW	ISI-0062-C	IWC

Support No.	Sheet No.	Support Type: Pipe Size	Restraint	Snubber	Spring	Anchor	Stroke	Integrally-Welded Attachment Size	Exam Required	Bolting	Acceptance Range
FWH-200	1	16		PSA-3			5"	No	VT-3,4	Yes	1 1/4" - 4 3/4"
FWH-201	1	16		PSA-35			6"	No	VT-3,4	Yes	1/4" - 5 5/8"
FWH-202	1	16	X					No	VT-3	Yes	
FWH-203	1	16	X					No	VT-3	Yes	
FWH-204	1	16	X					No	VT-3	Yes	
FWH-205	1	16		PSA-35			6"	No	VT-3,4	Yes	1/4" - 4 7/16"
FWH-206	1	16	X					No	VT-3	Yes	
FWH-208	1	16	X					No	VT-3	Yes	
FWH-209	1	18	X					No	VT-3	Yes	
FWH-240	2	16		PSA-10(2)			6"	No	VT-3,4	Yes	1 3/8" - 5 3/4"
FWH-241	2	16		PSA-10			6"	No	VT-3,4	Yes	1/4" - 5 5/8"
FWH-242	2	16	X					No	VT-3	Yes	
FWH-243	2	16	X					No	VT-3	Yes	
FWH-244	2	16		PSA-35			6"	No	VT-3,4	Yes	1 1/16 - 5 3/4"
FWH-245	2	16	X					No	VT-3	Yes	

TABLE H (CONTINUED)

COMPONENTS SUBJECT TO EXAMINATION CATEGORY

ASME CLASS 2 SUPPORTS

System	Dwg. No.	Table
FW	ISI-0062-C	IWC

Support No.	Sheet No.	Support Type: Pipe Size	Restraint	Snubber	Spring	Anchor	Stroke	Integrally-Welded Attachment Size	Exam Required	Bolting	Acceptance Range
FWH-246	2	16	X					No	VT-3	Yes	
FWH-247	2	16	X					No	VT-3	Yes	
FWH-248	2	16		PSA-10			6"	No	VT-3	Yes	1/4" - 4 5/8"
FWH-249	2	18	X					No	VT-3	Yes	
FWH-280	3	16		PSA-3			5"	No	VT-3,4	Yes	1 3/4" - 4 3/4"
FWH-281	3	16		PSA-35			6"	No	VT-3,4	Yes	1/4" - 5 1/4"
FWH-282	3	16	X					No	VT-3	Yes	
FWH-284	3	16	X					No	VT-3	Yes	
FWH-285	3	16		PSA-35			6"	No	VT-3,4	Yes	1 9/16" - 5 3/4"
FWH-286	3	16	X					No	VT-3	Yes	
FWH-288	3	16	X					No	VT-3	Yes	
FWH-289	3	16		PSA-35			6"	No	VT-3,4	Yes	4 1/16" - 5 3/4"
FWH-290	3	16	X					No	VT-3	No	
FWH-291	3	18	X					No	VT-3	Yes	

TABLE H (CONTINUED)

COMPONENTS SUBJECT TO EXAMINATION CATEGORY

ASME CLASS 2 SUPPORTS

System	Dwg. No.	Table
FW	ISI-0062-C	IWC

Support No.	Sheet No.	Support Type: Pipe Size	Restraint	Snubber	Spring	Anchor	Stroke	Integrally-Welded Attachment Size	Exam Required	Bolting	Acceptance Range
FWH-320	4	16		PSA-10			6"	No	VT-3,4	Yes	1 7/8" - 5 3/4"
FWH-321	4	16		PSA-35			6"	No	VT-3,4	Yes	1/4" - 5 5/16"
FWH-322	4	16	X					No	VT-3	Yes	
FWH-323	4	16		PSA-35			6"	No	VT-3,4	Yes	1/4" - 4 7/16"
FWH-324	4	16	X					No	VT-3	Yes	
FWH-325	4	16	X					No	VT-3	Yes	
FWH-327	4	16	X					No	VT-3	Yes	
FWH-328	4	16		PSA-35			6"	No	VT-3,4	Yes	1/4" - 3 3/8"
FWH-329	4	16	X					No	VT-3	Yes	
FWH-331	4	18	X					No	VT-3	Yes	
FWH-332	4	18	X					No	VT-3	Yes	
FWH-360	5	6	X					No	VT-3	Yes	
FWH-363	5	6	X					No	VT-3	Yes	
FWH-364	5	6	X					No	VT-3	Yes	

TABLE H (CONTINUED)

COMPONENTS SUBJECT TO EXAMINATION CATEGORY

ASME CLASS 2 SUPPORTS

System	Dwg. No.	Table
FW	ISI-0062-C	IWC

Support No.	Sheet No.	Support Type: Pipe Size	Restraint	Snubber	Spring	Anchor	Stroke	Integrally-Welded Attachment Size	Exam Required	Bolting	Acceptance Range
FWH-365	5	6	X					No	VT-3	Yes	
FWH-366	5	6	X					No	VT-3	Yes	
FWH-367	5	6	X					No	VT-3	Yes	
FWH-368	5	6	X					No	VT-3	Yes	
FWH-369	5	6		PSA-3			5"	No	VT-3	Yes	1 1/2" - 4 3/4"
FWH-370	5	6		PSA-3			5"	No	VT-3,4	Yes	1 3/8" - 4 3/4"
FWH-371	5	6	X					No	VT-3,4	Yes	
FWH-372	5	6	X					No	VT-3	Yes	
FWH-373	5	6		PSA-10			6"	No	VT-3,4	Yes	1/4" - 4 3/4"
FWH-374	5	6		PSA-1			4"	No	VT-3,4	Yes	1/4" - 2 15/16"
FWH-377	5	6		PSA-1	BP-VS2B-13		4" 2 1/4"	No	VT-3,4	Yes	1/4" - 3 5/16" 1/4" - 1 9/16"
FWH-378	5	6			BP-VS4B		4 1/2	No	VT-3,4	Yes	1 3/8" - 4 1/4"
FWH-379	5	6	X					No	VT-3	Yes	
FWH-380	5	6	X					No	VT-3	Yes	
FWH-381	5	6	X					No	VT-3	Yes	

TABLE H (CONTINUED)

COMPONENTS SUBJECT TO EXAMINATION CATEGORY

ASME CLASS 2 SUPPORTS

System	Dwg. No.	Table
FW	ISI-0062-C	IWC

Support No.	Sheet No.	Support Type: Pipe Size	Restraint	Snubber	Spring	Anchor	Stroke	Integrally-Welded Attachment Size	Exam Required	Bolting	Acceptance Range
FWH-382	5	6	X					No	VT-3	Yes	
FWH-480	8	6		PSA-3			5"	No	VT-3,4	Yes	1 1/2" - 4 3/4"
FWH-481	8	6			BP-VS4B		4 1/2	No	VT-3,4	Yes	1 1/4" - 4 1/4"
FWH-482	8	6	X					No	VT-3	Yes	
FWH-483	8	6		PSA-10			6"	No	VT-3,4	Yes	1 1/2" - 5 3/4"
FWH-484	8	6	X					No	VT-3	Yes	
FWH-485	8	6		PSA-3			5"	No	VT-3,4	Yes	7/8" - 4 9/16"
FWH-486	8	6	X					No	VT-3	Yes	
FWH-487	8	6		PSA-3(2)			5"	No	VT-3,4	Yes	3/8" - 4 3/4"
FWH-488	8	6	X					No	VT-3	Yes	
FWH-489	8	6	X					No	VT-3	Yes	
FWH-490	8	6	X					No	VT-3	No	
FWH-491	8	6	X					No	VT-3	Yes	
FWH-492	8	6	X					No	VT-3	Yes	
FWH-493	8	6	X					No	VT-3	Yes	

TABLE H (CONTINUED)

COMPONENTS SUBJECT TO EXAMINATION CATEGORY

ASME CLASS 2 SUPPORTS

System	Dwg. No.	Table
FW	ISI-0062-C	IWC

Support No.	Sheet No.	Support Type: Pipe Size	Restraint	Snubber	Spring	Anchor	Stroke	Integrally-Welded Attachment Size	Exam Required	Bolting	Acceptance Range
FWH-412	6	6	X					No	VT-3	Yes	
FWH-416	6	6	X					No	VT-3	Yes	
FWH-417	6	6	X					No	VT-3	Yes	
FWH-418	6	6	X					No	VT-3	Yes	
FWH-421	6	6	X					No	VT-3	Yes	
FWH-422	6	6	X					No	VT-3	Yes	
FWH-423	6	6		PSA-10			6"	No	VT-3,4	Yes	1 1/8" - 5 3/4"
FWH-424	6	6	X					No	VT-3	Yes	
FWH-425	6	6	X					No	VT-3	Yes	
FWH-426	6	6		PSA-3			5"	No	VT-3,4	Yes	11/32" - 4 3/4"
FWH-428	6	6	X					No	VT-3	Yes	
FWH-429	6	6	X					No	VT-3	Yes	
47A401-8-1	6	6		PSA-3(2)			5"	No	VT-3,4	Yes	3/4" - 4 3/4"
FWH-403	6	6	X					No	VT-3	Yes	
FWH-405	6	6		PSA-3			5"	No	VT-3,4	Yes	1/4" - 4 7/16"

TABLE H (CONTINUED)

COMPONENTS SUBJECT TO EXAMINATION CATEGORY

ASME CLASS 2 SUPPORTS

System	Dwg. No.	Table
FW	ISI-0062-C	IWC

Support No.	Sheet No.	Support Type: Pipe Size	Restraint	Snubber	Spring	Anchor	Stroke	Integrally-Welded Attachment Size	Exam Required	Bolting	Acceptance Range
FWH-496	8	6	X					No	VT-3	Yes	
FWH-497	8	6		PSA-3			5"	No	VT-3,4	Yes	1/4" - 4 11/16"
FWH-498	8	6	X					No	VT-3	Yes	
FWH-499	8	6	X					No	VT-3	Yes	
FWH-500	8	6	X					No	VT-3	Yes	
FWH-502	8	6	X					No	VT-3	Yes	
FWH-503	8	6	X					No	VT-3	Yes	
FWH-504	8	6	X					No	VT-3	Yes	
FWH-407	6	6	X					No	VT-3	Yes	
FWH-408	6	6			BP-VS6B		6 1/2	No	VT-3,4	Yes	1 1/8" - 6 1/2"
FWH-409	6	6		PSA-3			5"	No	VT-3,4	Yes	1 3/8" - 4 3/4"
FWH-410	6	6	X					No	VT-3,4	Yes	
FWH-411	6	6		PSA-3			5"	No	VT-3	Yes	1 1/4" - 4 3/4"
FWH-412	6	6	X					No	VT-3	Yes	
FWH-416	6	6	X					No	VT-3	Yes	

TABLE H (CONTINUED)

COMPONENTS SUBJECT TO EXAMINATION CATEGORY

ASME CLASS 2 SUPPORTS

System	Dwg. No.	Table
FW	ISI-0062-C	IWC

Support No.	Sheet No.	Support Type: Pipe Size	Restraint	Snubber	Spring	Anchor	Stroke	Integrally-Welded Attachment Size	Exam Required	Bolting	Acceptance Range
FWH-406	6	6	X					No	VT-3	Yes	
47A401-8-2	7	6		PSA-3			5"	No	VT-3,4	Yes	1/4" - 3 1/4"
47A427-6-1	6	6		PSA-3			5"	No	VT-3,4	Yes	1/4" - 3 5/8"
FWH-446	7	6	X					No	VT-3	Yes	
FWH-447	7	6			BP-3400		4 1/2	No	VT-3,4	Yes	1 3/16" - 4 1/4"
FWH-449	7	6		PSA-3			5"	No	VT-3,4	Yes	1/4" - 4 1/4"
FWH-450	7	6		PSA-3			5"	No	VT-3,4	Yes	1 1/2" - 4 3/4"
FWH-452	7	6	X					No	VT-3	Yes	
FWH-453	7	6		PSA-3(2)			5"	No	VT-3,4	Yes	1/4" - 4 1/4"
FWH-454	7	6	X					No	VT-3	Yes	
FWH-455	7	6		PSA-10			6"	No	VT-3,4	Yes	1 1/8" - 5 3/4"
FWH-456	7	6	X					No	VT-3	Yes	
FWH-457	7	6	X					No	VT-3	Yes	
FWH-458	7	6	X					No	VT-3	Yes	

TABLE H (CONTINUED)

COMPONENTS SUBJECT TO EXAMINATION CATEGORY

ASME CLASS 2 SUPPORTS

System	Dwg. No.	Table
FW	ISI-0062-C	IWC

Support No.	Sheet No.	Support Type: Pipe Size	Restraint	Snubber	Spring	Anchor	Stroke	Integrally-Welded Attachment Size	Exam Required	Bolting	Acceptance Range
FWH-459	7	6	X					No	VT-3	Yes	
FWH-460	7	6	X					No	VT-3	Yes	
FWH-461	7	6	X					No	VT-3	Yes	
FWH-462	7	6	X					No	VT-3	Yes	
FWH-465	7	6	X					No	VT-3	Yes	
FWH-466	7	6		PSA-3			5"	No	VT-3,4	Yes	13/16" - 4 3/4"
FWH-467	7	6	X					No	VT-3	Yes	
FWH-468	7	6		PSA-1/4"			4"	No	VT-3,4	Yes	1/4" - 2 15/16"
FWH-469	7	6	X					No	VT-3	Yes	
FWH-472	7	6	X					No	VT-3	Yes	
FWH-473	7	6	X					No	VT-3	Yes	

DATA PACKAGE COVER SHEET

PRESERVICE BASELINE INSPECTION FOR TENNESSEE VALLEY AUTHORITY WATTS BAR NUCLEAR PLANT

Unit _____

All preservice inspection requirements have been conducted in accordance with this program and all acceptance criteria has been satisfied.

_____
Nuclear Central Office
Mechanical Branch, Chief

_____
Date

_____
Plant Manager

_____
Date

DATA SHEET 1

The NDE Inspection Section representative shall sign-off the applicable portions of this data sheet when the examination requirements of Sections 6.0, 7.0, 8.0, and 9.0 of this program have been completed.

EXAMINATION SECTION	NDE INSPECTION SECTION REPRESENTATIVE	DATE
Class 1 Components		
Reactor Vessel		
6.1.1.1		
6.1.1.2		
6.1.1.3		
6.1.1.4		
6.1.1.5		
6.1.2		
6.1.3		
6.1.4		
6.1.5		
6.1.9		
6.1.10		
6.1.11		
Pressurizer		
6.2.1		
6.2.2		
6.2.3		
6.2.4		
6.2.6		
6.2.7		
Steam Generators		
6.3.1		
6.3.3		
6.3.5		
6.3.8		

DATA SHEET 1 (Cont'd)

EXAMINATION SECTION	NDE INSPECTION SECTION REPRESENTATIVE	DATE
Class 1 Components (Continued)		
Piping		
6.4.1		
6.4.2		
6.4.3		
6.4.4		
6.4.5		
6.4.6		
6.4.8		
RCP		
6.5.1		
6.5.2		
6.5.4		
6.5.5		
6.5.6		
Valves		
6.6.2		
6.6.6		
Class 2 Components		
Steam Generators		
7.1.1		
7.1.2		
RHRHX		
7.2.1		
7.2.2		
7.2.3		
RHX		
7.3.1		
7.3.3		
LHX		
7.4.1		
7.4.3		

DATA SHEET 1 (cont'd)

EXAMINATION SECTION	NDE INSPECTION SECTION REPRESENTATIVE	DATE

Class 2 Components (Continued)

ELHX

7.5.1

BIT

7.6.1
7.6.2
7.6.3
7.6.4

WA

7.7.1
7.7.2
7.7.3
7.7.4

ST

7.8.1
7.8.3

Piping

7.9.1
7.9.2
7.9.3
7.9.5
7.9.6

RHRP

7.10.3
7.10.4

CCP

7.11.3
7.11.4

DATA SHEET 1 (cont'd)

EXAMINATION SECTION	NDE INSPECTION SECTION REPRESENTATIVE	DATE
Class 2 Components (Continued)		
SIP		
7.12.4		
PDP		
7.13.4		
Valves		
7.14.1		

All examinations required by the referenced sections of this data sheet have been performed and acceptance criteria has been satisfied.

NDE Inspection Section Representative _____ Date _____

Reviewed By: _____
Supervisor, NDE Engineering Section _____ Date _____

Reviewed By: _____
Supervisor, ISI Programs Section _____ Date _____

Approved by: _____
Supervisor, Inservice Inspection Group _____ Date _____

DATA SHEET 2

In the event system or component alterations or repairs are made which require reexamination or components are reexamined for other reasons following sign-off of all or portions of Data Sheet 2, this Data Sheet shall be used to reflect these additional examinations. Each area requiring reexamination shall be documented on a continuation sheet of this Data Sheet.

Additional examinations were required to be performed as noted above (check appropriate space):

_____ Yes _____ No

All additional examinations requiring use of this data sheet, if any, have been performed and all acceptance criteria has been satisfied. If additional examinations were performed, all continuation sheets have been completed, signed, and attached to this data sheet.

_____
NDE Inspection Section Representative _____ Date

Reviewed By: _____
Supervisor, NDE Engineering Section _____ Date

Reviewed By: _____
Supervisor, ISI Programs Section _____ Date

Approved By: _____
Supervisor, Inservice Inspection Group _____ Date

DATA SHEET 2 CONTINUATION SHEET

Component:

Component Identification:

Reference Drawing:

Program Section:

Examination Method:

Reason for Reexamination:

Reexamination complete and acceptance criteria has been satisfied.

Approved By:

NDE Inspection Section Representative

Date

APPENDIX C

NOTIFICATION OF INDICATION

PART I - FINDINGS

NOI No. _____ Plant/Unit _____

Examination Report No. _____ Component ID _____

Drawing No. _____

Description of Indication: (Sketch/Photograph if needed)

_____

_____

_____

Signature of Examiner/Certif. Level _____
Date

Signature of Field Supervisor (Contractor) _____
Date

NDE Inspection Section Representative _____
Date

Assigned to:

Modifications Group _____

Mechanical Maintenance _____

Other _____ _____
Plant Manager

PART II - DISPOSITION

_____

_____

_____

Disposition Prepared By _____
Date

Disposition Approved By _____
Date

PART III - VERIFICATION

Verification of Completed Corrective Action and/or Examination By Inservice Inspection Group Representative

_____

_____

_____

Signature _____ Date _____

REQUEST FOR RELIEF ISI-4 (Continued)

Weld Number[1]	Code Category[2]	Drawing Number	Physical Configuration[3]	Scan[4]/Limitation[5]	Remarks[6]
RHRS-102	CF	CHM-2636-C 6 of 8	E/T	3/5:00-7:00 4/6:00-9:00	ELL introdoses prevent coupling from 6:00-7:00
RHRF-D051-12LS	CF	CHM-2636-C 6 of 8	E	9/No scan 10/No scan	ELL introdos prevents ultrasonic coupling
RHRS-132-LS	CF	CHM-2636-C 6 of 8	E	9/No scan 10/No scan	ELL introdoses prevents ultrasonic coupling
SIS-40-LS	CF	CHM-2758-C 3 of 13	E	9/No scan 10/No scan	ELL introdos prevents ultrasonic coupling
SIF-D080-1-LS	CF	CHM-2758-C 2 of 13	E	9/No scan 10/No scan	ELL introdos prevents ultrasonic coupling
FWF-D001-6	CG	CHM-2671-C 1 of 8	E/V	3/11:00-1:00, 2:00-4:00, 5:00-7:00 4/No scan 5/See scan 3 limits 6/See scan 3 limits	No examination due to component geometry and permanent support
FWS-41	CG	CHM-2671-C 4 of 8	R/P	4/3:00-5:00 5/3:00-5:00 6/3:00-5:00	No examination due to permanent support
UHIF-D039-16	CF	ISI-0004-C 5 of 5	P/ Penetration	No Scan	No examination due to weld covered by guard pipe
UHIF-D039-17	CF	ISI-0004-C 5 of 5	P/ Penetration	No scans	No examination due to weld covered by guard pipe

REQUEST FOR RELIEF ISI-4 (Continued)

Weld Number[1]	Code Category[2]	Drawing Number	Physical Configuration[3]	Scan[4]/Limitation[5]	Remarks[6]
MSS-61A-LS	CG	CHM-2669-C 4 of 4	P	All/Limited by 10%	Limited examinations due to pipe support
MSS-61B-LS	CG	CHM-2669-C 4 of 4	P	All/Limited by 10%	Limited examinations due to pipe support
MSF-D006-10 (R-501L)	CG	CHM-2669 4 of 4	P/V	15/Limited	Limited examination due to component geometry
RCS-106	B-J	ISI-0017-C 6 of 11	F/P	3/No scan 4/7:00 to 11:00	No examination due to component geometry. Limited due to permanent pipe restraint. (Note 8)
RHRF-D055-10	C-F	CHM-2636-C 8 of 8	E/V	3/9:00 4/No scan	No examination due to component geometry. Limited due to gamma plug.
SIF-D088-9	CF	CHM-2758-C 6 of 14	E/P	All/6:00	Limited examination due to thermocouple.

REQUEST FOR RELIEF ISI-4 (Continued)

Weld Number[1]	Code Category[2]	Drawing Number	Physical Configuration[3]	Scan[4]/Limitation[5]	Remarks[6]
MSF-D001-1	CG	CHM-2669 1 of 4	N/E	3/No scan 4/3:00	No examination due to component geometry. Limited examination due to 1½" branch connection.
RHRF-D049-4	CF	CHM-2636-C 5 of 8	P/E	4/No scan 3/12:00	No examination due to component geometry. Limited examination due to 2" branch connection.
SIF-B-T059-2B	BJ	CHM-2758-C 11 of 13	P/F	4, 5, 6/No scan	No examination due to flange bolting and configuration (Note 8)
MSS-8	CG	CHM-2669-C 1 of 4	E/P	3, 4, 5, 6/6:00	Limited examination due to pipe support.
SIF-B-T059-2A	BJ	CHM-2758-C 11 of 13	F/P	4, 5, 6/No scan	No examination due to flange bolting and configuration (Note 8)
RCS-1-4	B-J	CHM-2547-B 1 of 2	E/P	4/Limited base metal/limited	Limited examination due to elbow geometry (Note 9)
RCS-2-4	B-J	CHM-2547-B 1 of 2	E/P	4/Limited base metal/limited	Limited examination due to elbow geometry (Note 9)
RCS-3-4	B-J	CHM-2547-B 1 of 2	E/P	4/Limited base metal/limited	Limited examination due to elbow geometry (Note 9)
RCS-4-4	B-J	CHM-2547-B 1 of 2	E/P	4/Limited base metal/limited	Limited examination due to elbow geometry (Note 9)
RCF-D1-2	B-F	CHM-2547-B 1 of 2	E/N	4/No scan	No examination due to nozzle geometry (Note 9)

REQUEST FOR RELIEF ISI-4 (Continued)

Weld Number[1]	Code Category[2]	Drawing Number	Physical Configuration[3]	Scan[4]/Limitation[5]	Remarks[6]
RCF-D5-2	B-F	CHM-2547-B 1 of 2	E/N	4/No scan	No examination due to nozzle geometry (Note 9)
RCF-D2-2	B-F	CHM-2547-B 1 of 2	E/N	4/No scan	No examination due to nozzle geometry (Note 9)
RCF-D4-2	B-F	CHM-2547-B 1 of 2	E/N	4/No scan	No examination due to nozzle geometry (Note 9)
RCF-F4-1	B-F	CHM-2547-B 1 of 2	N/E	3/No scan	No examination due to nozzle geometry (Note 9)
RCF-F3-1	B-F	CHM-2547-B 1 of 2	N/E	3/No scan	No examination due to nozzle geometry (Note 9)
RCF-F2-1	B-F	CHM-2547-B 1 of 2	N/E	3/No scan	No examination due to nozzle geometry (Note 9)
RCS-1-5	B-J	CHM-2547-B 1 of 2	Branch Connections	3/Limited	Limited examination due to branch connection configuration (Note 9)
RCS-2-5	B-J	CHM-2547-B 1 of 2	Branch Connections	3/Limited	Limited examination due to branch connection configuration (Note 9)
RCS-3-5	B-J	CHM-2547-B 1 of 2	Branch Connections	3/Limited	Limited examination due to branch connection configuration (Note 9)
RCS-4-5	B-J	CHM-2547-B 1 of 2	Branch Connections	3/Limited	Limited examination due to branch connection configuration (Note 9)

REQUEST FOR RELIEF ISI-4 (Continued)

Weld Number[1]	Code Category[2]	Drawing Number	Physical Configuration[3]	Scan[4]/Limitation[5]	Remarks[6]
RCS-4-6	B-J	CHM-2547-B 1 of 2	Branch Connections	4/No scan	No examination due to branch connection configuration (Note 9)
RCS-P-1	B-J	CHM-2547-B 1 of 2	Branch Connections	4/No scan	No examination due to branch connection configuration (Note 9)

REQUEST FOR RELIEF ISI-10

Components: Regenerative Heat Exchanger

Class: ASME Class 2 (TVA Safety Class B)

Inspection Requirement: Volumetric examination of at least 20 percent of each circumferential butt weld (head-to-shell, tube sheet-to-shell) in examination category C-A. This examination shall be uniformly distributed among three areas around the vessel circumference.

Basis for Relief: The regenerative heat exchanger has 12 circumferential welds to be examined. Seven of these welds can be code examined and 20 percent of each of the other 5 circumferential welds (listed below) can be examined, however, because of permanent and nonremovable supports the examination area cannot be uniformly distributed.

Weld Number	Code Category	Drawing Number	Physical Configuration	Scan[1] Limitation	Remarks
RHX-2	C-A	ISI-0007-A (See attached drawing)	Tube sheet to shell	5 and 6 at 6:00 to 12:00	Limited due to nonremovable support
RHX-6	C-A	ISI-0007-A (See attached drawing)	Tube sheet to shell	3, 5, and 6 at 7:00 to 11:00	Limited due to permanent support
RHX-7	C-A	ISI-0007-A (See attached drawing)	Shell to tube sheet	4, 5, and 6 at 7:00 to 11:00	Limited due to permanent support
RHX-10	C-A	ISI-0007-A (See attached drawing)	Tube sheet to shell	3, 5, and 6 at 6:00 to 12:00	Limited due to nonremovable support
RHR-11	C-A	ISI-0007-A (See attached drawing)	Shell to tube sheet	4, 5, and 6 at 6:00 to 12:00	Limited due to nonremovable support

Notes:

1. Scan 3 and 4 are perpendicular to circumferential welds. Scan 5 and 6 are parallel to circumferential welds.
2. Limitations are expressed in 0'clock references.

REQUEST FOR RELIEF ISI-10 (Continued)

Alternate Inspection: These five circumferential welds shall be volumetrically examined in all accessible areas. This will exceed the 20-percent examination requirements.

[illegible]

[illegible]	[illegible]	[illegible]	[illegible]	[illegible]	[illegible]
RHX-7	[illegible]	[illegible] (See attached drawing)	[illegible]	[illegible]	[illegible]
RHX-10	[illegible]	171-0037-A (See attached drawing)	[illegible]	[illegible] to 12:00	[illegible]
[illegible]	[illegible]	[illegible]	[illegible]	[illegible]	[illegible]

[illegible]

[illegible]

[illegible]

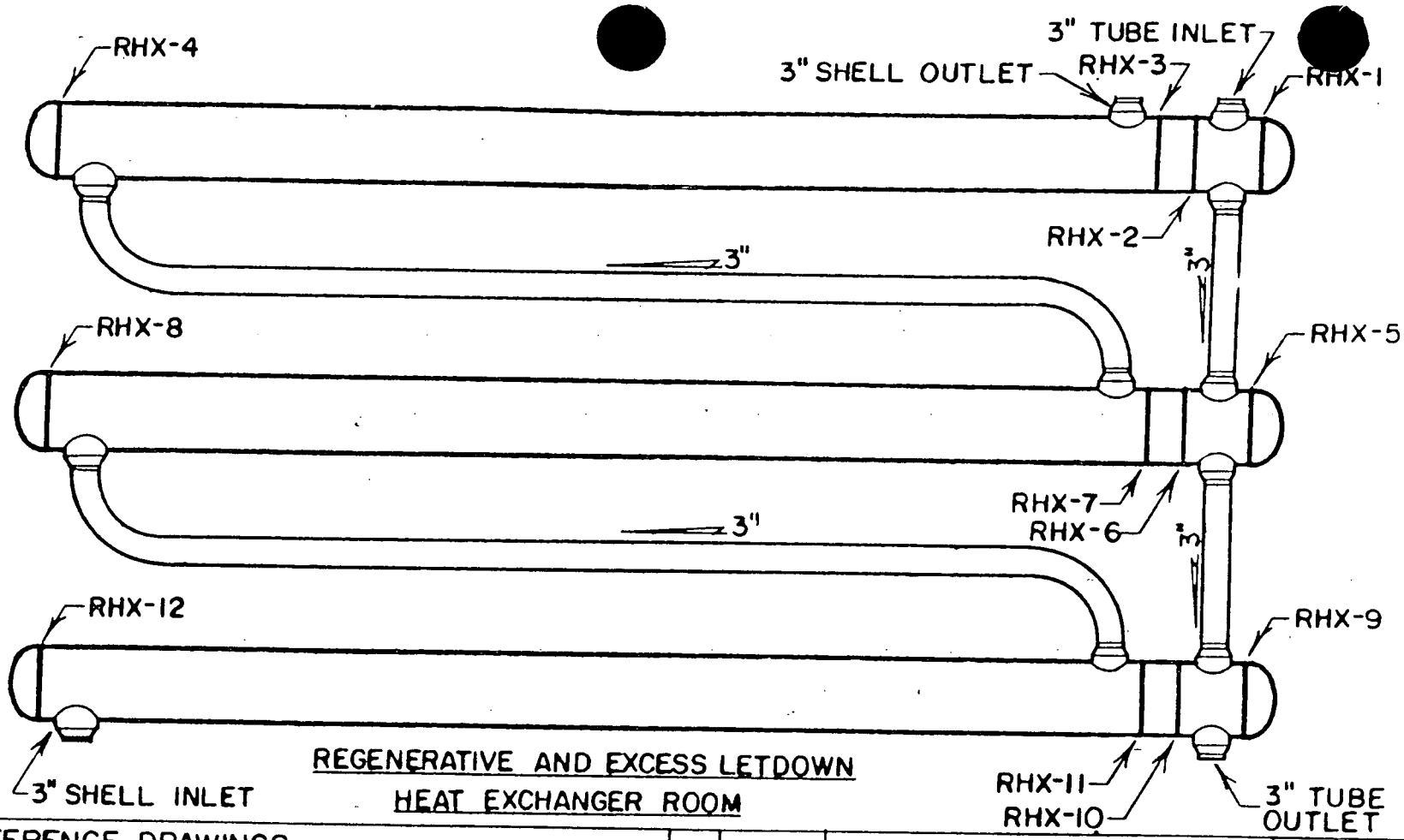

REGENERATIVE AND EXCESS LETDOWN
HEAT EXCHANGER ROOM

REFERENCE DRAWINGS
5578
5579
5580

MATERIAL SPECIFICATIONS
CLASS 2 △1
SHELL
SA 351 CF 8
HEADS
SA 240 TP 304L
TUBE SHEET
SA 182 F 304

NO.	DATE	REVISIONS	CK'D	APP.
1	1-14-84	CHANGED CLASS DESIGNATIONS KEV	JCG	[illegible]

TENNESSEE VALLEY AUTHORITY
DIVISION OF NUCLEAR POWER

WATTS BAR NUCLEAR PLANT
UNITS #1 & #2
REGENERATIVE HEAT EXCHANGER

SCALE: NTS
DRAWN
TRACED KEV
CHECKED DAD
SUBMITTED DAD
APPROVED [illegible]
DATE 8-5-82
SHEET 1 OF 3 SHEETS
ISI-0077-A

R1

NATIONAL BOARD NUMBERS

003-FEEDWATER

TVA COMP. ID	MANUFACTURER	S/N	NAT. BD. NO.
N/A	Dravo 03A-FW-030	11075	N/A
N/A	Dravo 03A-FW-031	11076	N/A
N/A	Dravo 03A-FW-036	14945	N/A
N/A	Dravo 03A-FW-037	14946	N/A
N/A	Dravo 03A-FW-038	14947	N/A
N/A	Dravo 03A-FW-039	14948	N/A
N/A	Dravo 03A-FW-044	14953	N/A
N/A	Dravo 03A-FW-045	14954	N/A
N/A	Dravo 03A-FW-046	14955	N/A
N/A	Dravo 03A-FW-047	14956	N/A
N/A	Dravo 03A-FW-048	14957	N/A
N/A	Dravo 03A-FW-049	14958	N/A
N/A	Dravo 03A-FW-054	14963	N/A
N/A	Dravo 03A-FW-055	14964	N/A
N/A	Dravo 03A-FW-056	14965	N/A
N/A	Dravo 03A-FW-057	14966	N/A
N/A	Dravo 03A-FW-058	14967	N/A
N/A	Dravo 03A-FW-059	14968	N/A
N/A	Dravo 03A-FW-065	14974	N/A
N/A	Dravo 03A-FW-066	14975	N/A
N/A	Dravo 03A-FW-067	14976	N/A
N/A	Dravo 03A-FW-068	14977	N/A
N/A	Dravo 03B-AF-177	14982	N/A
N/A	Dravo 03B-AF-178	14983	N/A
N/A	Dravo 03B-AF-180	14984	N/A
N/A	Dravo 03B-AF-181	14985	N/A
N/A	Dravo 03B-AF-176	15591	N/A
1-CKV-03-645	Borg-Warner	26305	N/A
1-CKV-03-655	Borg-Warner	26310	N/A
1-CKV-03-652	Borg-Warner	26311	N/A
1-CKV-03-669	Borg-Warner	26312	N/A
1-CKV-03-638	Borg-Warner	26313	N/A
1-CKV-03-656	Borg-Warner	26317	N/A
1-CKV-03-679	Borg-Warner	26318	N/A
1-CKV-03-670	Borg-Warner	26320	N/A
1-CKV-03-644	Borg-Warner	26321	N/A
1-CKV-03-678	Borg-Warner	26322	N/A
N/A	Dravo 03A-FW-001	6859	N/A
N/A	Dravo 03A-FW-003	6861	N/A
N/A	Dravo 03A-FW-005	6863	N/A
N/A	Dravo 03A-FW-006	6864	N/A
N/A	Dravo 03A-FW-007	6865	N/A
N/A	Dravo 03A-FW-008	6866	N/A
N/A	Dravo 03A-FW-010	6868	N/A

NATIONAL BOARD NUMBERS

SYSTEM: 003-FEEDWATER

TVA COMP. ID	MANUFACTURER	S/N	NAT. BD. NO.
N/A	Dravo 03A-FW-012	6870	N/A
N/A	Dravo 03A-FW-013	6871	N/A
N/A	Dravo 03A-FW-015	6873	N/A
N/A	Dravo 03A-FW-016	6874	N/A
N/A	Dravo 03A-FW-017	6875	N/A
N/A	Dravo 03A-FW-018	6876	N/A
N/A	Dravo 03A-FW-020	6878	N/A
N/A	Dravo 03A-FW-021	6879	N/A
N/A	Dravo 03A-FW-022	6880	N/A
N/A	Dravo 03A-FW-023	6881	N/A
N/A	Dravo 03A-FW-024	6882	N/A
N/A	Dravo 03A-FW-025	6883	N/A
N/A	Dravo 03A-FW-026	8570	N/A
N/A	Dravo 03A-FW-027	8571	N/A
N/A	Dravo 03A-FW-028	8572	N/A
N/A	Dravo 03A-FW-029	8573	N/A
1-FCV-03-236	Leslie	D17543-3CEX	N/A
1-FCV-03-239	Leslie	D17543-3CEZ	N/A
1-FCV-03-242	Leslie	D17543-3CFB	N/A
1-FCV-03-245	Leslie	D17543-3CFC	N/A
1-FCV-03-087	Walworth	D66290	1642
1-FCV-03-033	Walworth	D66291	1643
1-FCV-03-047	Walworth	D66292	1644
1-FCV-03-100	Walworth	D66293	1645
1-CKV-03-510	Walworth	D66295	1647
1-CKV-03-511	Walworth	D66296	1648
1-CKV-03-509	Walworth	D66297	1649
1-CKV-03-508	Walworth	D66451	1712
N/A	Dravo 03B-AF-179	J12560	No NPP-1

NATIONAL BOARD NUMBERS

SYSTEM: 062-CHEMICAL & VOLUME CONTROL SYSTEM

TVA COMP. ID	MANUFACTURER	S/N	NAT. BD. NO.
1-CKV-62-659	Westinghouse	03CS882S710031	W-10328
1-CKV-62-660	Westinghouse	03CS882S710034	W-10331
1-CKV-62-638	Westinghouse	03CS882S710035	W-10332
1-CKV-62-640	Westinghouse	03CS882S710033	W-10330
1-DRV-68-580	Velan	1678	N/A
1-HTX-62-120	Joseph Oat	2247-2A11	856
1-HTX-62-122	Atlas Mfg.	3142	2520
1-HTX-62-121	Atlas Mfg.	3151	2529
1-HTX-62-01/01A	Atlas Mfg.	3159	2537
1-DEMN-62-01/01A	Lamco Ind.	407	138
1-DEMN-62-01/01B	Lamco Ind.	408	139
1-DEMN-62-02/1A	Lamco Ind.	412	143
1-TANK-62-05/1A	Lamco Ind.	450	181
1-FCV-62-84	Fisher	5697030	2116
1-FCV-62-70	Fisher	5737615	2463
1-FCV-62-69	Fisher	5737616	2464
N/A	Dravo 62A-CVC-144	7390	N/A
N/A	Dravo 62A-CVC-145	7391	N/A
N/A	Dravo 62A-CVC-146	7392	N/A
N/A	Dravo 62A-CVC-147	7393	N/A
N/A	Dravo 62A-CVC-148	7394	N/A
N/A	Dravo 62A-CVC-149	7395	N/A
N/A	Dravo 62A-CVC-151	7396	N/A
N/A	Dravo 62A-CVC-152	7397	N/A
N/A	Dravo 62A-CVC-153	7398	N/A
N/A	Dravo 62A-CVC-154	7399	N/A
N/A	Dravo 62A-CVC-155	7400	N/A
N/A	Dravo 62A-CVC-156	7401	N/A
N/A	Dravo 62A-CVC-157	7402	N/A
N/A	Dravo 62A-CVC-158	7403	N/A
N/A	Dravo 62A-CVC-159	7404	N/A
N/A	Dravo 62A-CVC-160	7405	N/A
N/A	Dravo 62A-CVC-161	7406	N/A
N/A	Dravo 62A-CVC-162	7407	N/A
N/A	Dravo 62A-CVC-163	7408	N/A
N/A	Dravo 62A-CVC-164	7404	N/A
N/A	Dravo 62A-CVC-171	7416	N/A
N/A	Dravo 62A-CVC-172	7417	N/A
N/A	Dravo 62A-CVC-173	7418	N/A
N/A	Dravo 62A-CVC-174	7419	N/A
N/A	Dravo 62A-CVC-175	7420	N/A
N/A	Dravo 62A-CVC-150	9507	N/A
N/A	Dravo 62A-CVC-176	9508	N/A

NATIONAL BOARD NUMBERS

SYSTEM: 063-SAFETY INJECTION SYSTEM

TVA COMP. ID	MANUFACTURER	S/N	NAT. BD. NO.
N/A	Dravo 63-SI-163	10378	N/A
N/A	Dravo 63-SI-164	10379	N/A
N/A	Dravo 63-SI-165	10380	N/A
N/A	Dravo 63-SI-166	10381	N/A
N/A	Dravo 63-SI-167	10382	N/A
N/A	Dravo 63-SI-168	10383	N/A
N/A	Dravo 63-SI-169	10384	N/A
N/A	Dravo 63-SI-170	10385	N/A
N/A	Dravo 63-SI-171	10386	N/A
N/A	Dravo 63-SI-172	10387	N/A
N/A	Dravo 63-SI-175	10390	N/A
N/A	Dravo 63-SI-176	10391	N/A
N/A	Dravo 63-SI-177	10392	N/A
N/A	Dravo 63-SI-178	10393	N/A
N/A	Dravo 63-SI-179	10394	N/A
N/A	Dravo 63-SI-180	10395	N/A
N/A	Dravo 63-SI-181	10396	N/A
N/A	Dravo 63-SI-182	10397	N/A
N/A	Dravo 63-SI-183	10398	N/A
N/A	Dravo 63-SI-215	10778	N/A
N/A	Dravo 63-SI-216	10779	N/A
N/A	Dravo 63-SI-217	10780	N/A
1-63-CKV-623	Westinghouse	10CS880000011	W10413
1-63-CKV-624	Westinghouse	10CS880000014	W10433
1-63-CKV-562	Westinghouse	10CS880000015	W10442
1-63-CKV-625	Westinghouse	10CS880000016	W10443
1-63-CKV-622	Westinghouse	10CS880000020	W11118
1-63-CKV-563	Westinghouse	10CS880000021	W11119
1-63-CKV-561	Westinghouse	10CS880000022	W11120
1-63-CKV-560	Westinghouse	10CS880000023	W11121
1-63-FCV-118	Westinghouse	10GM88FNH001	W10991
1-63-FCV-98	Westinghouse	10GM88FNH002	W11253
1-63-FCV-80	Westinghouse	10GM88FNH003	W11254
1-63-FCV-67	Westinghouse	10GM88FNH004	W11902
N/A	Dravo 63-SI-219	11524	N/A
N/A	Dravo 63-SI-220	11525	N/A
N/A	Dravo 63-SI-221	11526	N/A
1-63-CKV-502	Westinghouse	12CS84000001	W11112
N/A	Dravo 63-SI-250	13919	N/A
N/A	Dravo 63-SI-251	13920	N/A
N/A	Dravo 63-SI-252	13921	N/A
N/A	Dravo 63-SI-253	13922	N/A
1-63-FCV-1	Westinghouse	14GM84FEB0001	W11954

NATIONAL BOARD NUMBERS

SYSTEM: 063-SAFETY INJECTION SYSTEM

TVA COMP. ID	MANUFACTURER	S/N	NAT. BD. NO.
N/A	Dravo 63-SI-77	7620	N/A
N/A	Dravo 63-SI-78	7621	N/A
N/A	Dravo 63-SI-79	7622	N/A
N/A	Dravo 63-SI-80	7623	N/A
N/A	Dravo 63-SI-81	7624	N/A
N/A	Dravo 63-SI-82	7625	N/A
N/A	Dravo 63-SI-83	7626	N/A
1-63-FCV-8	Westinghouse	8GM84FEB0003	W10931
1-63-FCV-11	Westinghouse	8GM84FEB0004	W10932
1-63-FCV-94	Westinghouse	8GM88FNB0002	W10855
1-63-FCV-93	Westinghouse	8GM88FNSB0001	W10854
1-63-TV-513	Kerotest	HR36-22	N/A
1-63-CKV-588	Kerotest	LA1-11	N/A
1-63-CKV-586	Kerotest	LA1-20	N/A
1-63-CKV-589	Kerotest	LA1-24	N/A
1-63-CKV-587	Kerotest	LA1-7	N/A
1-63-CKV-549	Kerotest	LA5-12	N/A
1-63-CKV-543	Kerotest	LA514	N/A
1-63-CKV-553	Kerotest	LA5-15	N/A
1-63-CKV-547	Kerotest	LA5-2	N/A
1-63-CKV-555	Kerotest	LA5-23	N/A
1-63-CKV-551	Kerotest	LA5-24	N/A
1-63-CKV-545	Kerotest	LA5-5	N/A
1-63-CKV-557	Kerotest	LA5-9	N/A
N/A	TVA 1-63-S-04-07	N/A	N/A
N/A	TVA 1-63-S-04-08	N/A	N/A
N/A	TVA 1-63-S-04-19	N/A	N/A
N/A	TVA 1-63-S-04-19A	N/A	N/A
N/A	TVA 1-63-S-04-19B	N/A	N/A
N/A	TVA 1-63-S-04-20A	N/A	N/A
N/A	TVA 1-63-S-04-21	N/A	N/A
N/A	TVA 1-63-S-04-22	N/A	N/A
N/A	TVA 1-63-S-05-05	N/A	N/A
N/A	TVA 1-63-S-05-06	N/A	N/A
N/A	TVA 1-63-S-05-07	N/A	N/A
N/A	TVA 1-63-S-05-08	N/A	N/A
N/A	TVA 1-63-S-05-09	N/A	N/A
N/A	TVA 1-63-S-05-16	N/A	N/A
N/A	TVA 1-63-S-06-01	N/A	N/A
N/A	TVA 1-63-S-06-02	N/A	N/A
N/A	TVA 1-63-S-06-03	N/A	N/A
N/A	TVA 1-63-S-06-04	N/A	N/A
N/A	TVA 1-63-S-06-05	N/A	N/A
N/A	TVA 1-63-S-06-06	N/A	N/A

NATIONAL BOARD NUMBERS

SYSTEM: 063-SAFETY INJECTION SYSTEM

TVA COMP. ID	MANUFACTURER	S/N	NAT. BD. NO.
N/A	TVA 1-63-S-06-07	N/A	N/A
N/A	TVA 1-63-S-06-12	N/A	N/A
N/A	TVA 1-63-S-06-13	N/A	N/A
N/A	TVA 1-63-S-09-12	N/A	N/A
N/A	TVA 1-63-S-09-24	N/A	N/A
N/A	TVA 1-63-S-09-26	N/A	N/A
N/A	TVA 1-63-S-09-27	N/A	N/A
N/A	TVA 1-63-S-09-28	N/A	N/A
N/A	TVA 1-63-S-09-29	N/A	N/A
N/A	TVA 1-63-S-09-30	N/A	N/A
N/A	TVA 1-63-S-09-31	N/A	N/A
N/A	TVA 1-63-S-09-32	N/A	N/A
N/A	TVA 1-63-S-09-33	N/A	N/A
1-63-FCV-72	Westinghouse	18GM84FEH001	W17878
1-63-FCV-73	Westinghouse	18GM84FEH002	W17879
1-63-FCV-172	Westinghouse	12GM88SEH003	W11256
1-63-FCV-640	Westinghouse	8CS880000017	W10417
1-63-FCV-641	Westinghouse	6CS880000092	W10409
1-63-FCV-643	Westinghouse	8CS88000003	W10410
1-63-FCV-644	Westinghouse	6CS880000091	W10408

NATIONAL BOARD NUMBERS

SYSTEM: 068-REACTOR COOLANT SYSTEM

TVA COMP. ID	MANUFACTURER	S/N	NAT. BD. NO.
1-068-SGEN-SG1	Westinghouse	1591	W10286
1-068-SGEN-SG2	Westinghouse	1592	W10287
1-068-SGEN-SG3	Westinghouse	1593	W10288
1-068-SGEN-SG4	Westinghouse	1594	W10289
1-068-PRES-PR	Westinghouse	1601	W10792
1-068-ISV-519	Westinghouse	3GH880000082	W10864
1-068-ISV-530	Westinghouse	3GH880000083	W10865
1-068-ISV-514	Westinghouse	3GH880000084	W10866
1-068-ISV-508	Westinghouse	3GH880000085	W10867
1-068-ISV-541	Westinghouse	3GH880000089	W10871
1-068-ISV-536	Westinghouse	3GH880000090	W10872
1-068-ISV-525	Westinghouse	3GH880000098	W10953
1-068-ISV-547	Westinghouse	3GH880000099	W10954
1-068-FCV-332	Westinghouse	3GH88FNH02	W10877
1-068-FCV-333	Westinghouse	3GM88FNH01	W10876
1-068-PCV-340B	Fisher	5909465	2752
1-068-PCV-340D	Fisher	5909466	2753
1-068-PCV-334	Fisher	5916726	N/A
1-068-PCV-340A	Fisher	5916727	N/A
1-068-PMP-8	ESCO (for W)	923	None Supplied
1-068-PMP-31	ESCO (for W)	924	None Supplied
1-068-PMP-50	ESCO (for W)	925	None Supplied
1-068-PMP-73	ESCO (for W)	926	None Supplied
N/A	Dravo 68-RC-04	9464	N/A
N/A	Dravo 68-RC-05	9465	N/A
N/A	Dravo 68-RC-06	9466	N/A
N/A	Dravo 68-RC-07	9467	N/A
N/A	Dravo 68-RC-08	9468	N/A
N/A	Dravo 68-RC-09	9469	N/A
N/A	Dravo 68-RC-10	9470	N/A
N/A	Dravo 68-RC-11	9471	N/A
N/A	Dravo 68-RC-12	9472	N/A
N/A	Dravo 68-RC-14	9474	N/A
N/A	Dravo 68-RC-15	9475	N/A
N/A	Dravo 68-RC-16	9476	N/A
N/A	Dravo 68-RC-17	9477	N/A
N/A	Dravo 68-RC-18	9478	N/A
N/A	Dravo 68-RC-19	9479	N/A
N/A	Dravo 68-RC-20	9480	N/A
N/A	Dravo 68-RC-21	9481	N/A
N/A	Dravo 68-RC-22	9482	N/A
N/A	Dravo 68-RC-23	9483	N/A
N/A	Dravo 68-RC-24	9484	N/A
N/A	Dravo 68-RC-25	9485	N/A

NATIONAL BOARD NUMBERS

SYSTEM: 068-REACTOR COOLANT SYSTEM

TVA COMP. ID	MANUFACTURER	S/N	NAT. BD. NO.
N/A	Dravo 68-RC-27	9487	N/A
N/A	Dravo 68-RC-28	9488	N/A
N/A	Dravo 68-RC-29	9489	N/A
N/A	Dravo 68-RC-30	9490	N/A
N/A	Dravo 68-RC-31	9491	N/A
N/A	Dravo 68-RC-32	9492	N/A
N/A	Dravo 68-RC-33	9493	N/A
N/A	Dravo 68-RC-34	9494	N/A
N/A	Dravo 68-RC-35	9495	N/A
N/A	Dravo 68-RC-36	9496	N/A
1-68-ISV-515	Kerotest	DG-8-22	N/A
1-68-DRV-582	Kerotest	HX-2-10	N/A
1-68-ISV-520	Kerotest	HX-2-11	N/A
1-68-ISV-535	Kerotest	HX-2-16	N/A
1-68-ISV-524	Kerotest	HX-2-2	N/A
1-68-DRV-553	Kerotest	HX-2-20	N/A
1-68-ISV-509	Kerotest	HX-2-3	N/A
1-68-DRV-550	Kerotest	HX-2-4	N/A
1-68-DRV-549	Kerotest	HX-2-5	N/A
1-68-ISV-513	Kerotest	HX-2-8	N/A
1-68-ISV-505	Kerotest	HX-7-14	N/A
1-68-ISV-526	Kerotest	HX-7-7	N/A
1-68-ISV-531	Kerotest	HX-7-8	N/A
1-68-ISV-542	Kerotest	HX-2-21	N/A
1-68-ISV-543	Kerotest	HX-7-11	N/A
1-68-ISV-537	Kerotest	HX-7-9	N/A
1-68-ISV-510	Kerotest	KP-2-20	N/A
1-68-ISV-521	Kerotest	KP-22-23	N/A
1-68-DRV-581	Kerotest	KP-26-19	N/A
1-68-DRV-554	Kerotest	KP-26-20	N/A
1-68-ISV-504	Kerotest	KP-4-24	N/A
1-68-ISV-532	Kerotest	KP-7-20	N/A
1-68-ISV-516	Kerotest	KP-7-9	N/A
1-68-DRV-558	Kerotest	KP-10-22	N/A
1-68-DRV-557	Kerotest	KP-22-24	N/A
1-68-ISV-546	Kerotest	KP-7-1	N/A
1-68-ISV-538	Kerotest	KP-7-12	N/A
1-68-ISV-527	Kerotest	MC-5-6	N/A
1-68-RFV-563	Crosby	N56964-06-0029	905
1-68-RFV-564	Crosby	N56964-06-0033	201
1-68-RFV-565	Crosby	N56964-06-0034	907
N/A	TVA 1-68-5-01-001	N/A	N/A
N/A	TVA 1-68-5-01-002	N/A	N/A
N/A	TVA 1-68-5-01-003	N/A	N/A

NATIONAL BOARD NUMBERS

SYSTEM: 085-CONTROL ROD DRIVE MECH.

TVA COMP. ID	MANUFACTURER	S/N	NAT. BD. NO.
1-085-W001-H12	Westinghouse	41-115E238G03	None Supplied
1-085-W001-D12	Westinghouse	42-115E238G03	None Supplied
1-085-W001-L3	Westinghouse	43-115E238G03	None Supplied
1-085-W001-H14	Westinghouse	44-115E238G03	None Supplied
1-085-W001-J13	Westinghouse	45-115E238G03	None Supplied
1-085-W001-K10	Westinghouse	46-115E238G03	None Supplied
1-085-W001-H6	Westinghouse	47-115E238G03	None Supplied
1-085-W001-P4	Westinghouse	48-115E238G03	None Supplied
1-085-W001-F8	Westinghouse	49-115E238G03	None Supplied
1-085-W001-C11	Westinghouse	50-115E238G03	None Supplied
1-085-W001-M12	Westinghouse	51-115E238G03	None Supplied
1-085-W001-M2	Westinghouse	52-115E238G03	None Supplied
1-085-W001-C9	Westinghouse	53-115E238G03	None Supplied
1-085-W001-E5A	Westinghouse	54-1168E80G01	None Supplied
1-085-W001-L5A	Westinghouse	55-1168E80G01	None Supplied
1-085-W001-L11A	Westinghouse	56-1168E80G01	None Supplied
1-085-W001-E11A	Westinghouse	57-1168E80G01	None Supplied
1-085-W001-M6	Royal	RA71-004	255
1-085-W001-F12	Royal	RA72-070	256
1-085-W001-M10	Royal	RA72-083	249
1-085-W001-D10	Royal	RA73-108	250
1-085-W001-D6	Royal	RA73-110	251
1-085-W001-K4	Royal	RA73-111	252
1-085-W001-F4	Royal	RA73-112	253
1-085-W001-K12	Royal	RA73-113	254