FuelSolutions™ W21 Canister Storage License Amendment Request

LAR 1026-004, Revision 0
June 2005

Document No. WSNF-221
Docket No. 72-1026

Prepared by:

BNG Fuel Solutions Corporation
Campbell, California

©2005 BNG Fuel Solutions Corporation
All Rights Reserved

This page intentionally left blank.

TABLE OF CONTENTS

Section **Title** **Page**

1. GENERAL DESCRIPTION 1-1
1.1 Introduction 1.1-1
1.2 General Descriptions 1.2-1
1.2.1 FuelSolutions™ Storage System Characteristics 1.2-1
1.2.1.1 FuelSolutions™ Storage Cask 1.2-1
1.2.1.2 FuelSolutions™ Transfer Cask 1.2-1
1.2.1.3 FuelSolutions™ W21 Canister 1.2-2
1.2.1.4 FuelSolutions™ Support Equipment 1.2-8
1.2.2 Operational Features 1.2-10
1.2.2.1 Canister Loading 1.2-11
1.2.2.2 Canister Closure/Opening 1.2-11
1.2.2.3 Canister Horizontal Transfer 1.2-11
1.2.2.4 Canister Vertical Transfer 1.2-11
1.2.2.5 Storage 1.2-11
1.2.2.6 Transportation Cask Loading 1.2-11
1.2.3 FuelSolutions™ W21 Canister Contents 1.2-12
1.3 Identification of Agents and Contractors 1.3-1
1.4 On-Site Storage Array Configurations 1.4-1
1.5 Supplemental Data 1.5-1
1.5.1 Drawings 1.5-1
1.5.2 Product Literature 1.5-3
1.5.2.1 BORAL® Literature 1.5-3
1.5.2.2 Electroless Nickel Plating Literature 1.5-5

2. PRINCIPAL DESIGN CRITERIA 2-1
2.1 Structures, Systems, and Components Important to Safety 2.1-1
2.1.1 Identification of Items Important to Safety 2.1-1
2.1.2 Design Bases and Criteria 2.1-1

TABLE OF CONTENTS (continued)

Section	Title	Page
2.2	Spent Fuel to be Stored	2.2-1
2.3	Design Loadings	2.3-1
2.3.1	Normal Conditions	2.3-3
2.3.1.1	Normal Ambient Conditions	2.3-3
2.3.1.2	Internal Pressure	2.3-3
2.3.1.3	Dead Load	2.3-3
2.3.1.4	Handling Load	2.3-3
2.3.1.5	Leakage of the Confinement Boundary Under Normal Conditions	2.3-4
2.3.2	Off-Normal Conditions	2.3-4
2.3.2.1	Extreme Ambient Conditions	2.3-4
2.3.2.2	Internal Pressure	2.3-4
2.3.2.3	Misaligned Casks During Horizontal Canister Transfer	2.3-4
2.3.2.4	Reflood Pressure	2.3-5
2.3.2.5	Hydraulic Ram Failure During Horizontal Transfer	2.3-5
2.3.2.6	Leakage of the Confinement Boundary Under Off-Normal Conditions	2.3-5
2.3.3	Postulated Accident Conditions	2.3-5
2.3.3.1	Accident Thermal Conditions	2.3-5
2.3.3.2	Cask Drop and Tip-over	2.3-6
2.3.3.3	Fire	2.3-6
2.3.3.4	Internal Pressure	2.3-6
2.3.3.5	Leakage of the Confinement Boundary Under Accident Conditions	2.3-6
2.3.3.6	Explosive Overpressure	2.3-7
2.3.4	Natural Phenomena	2.3-7
2.3.4.1	Flooding	2.3-7
2.3.4.2	Tornado	2.3-7
2.3.4.3	Earthquake	2.3-7
2.3.4.4	Wind	2.3-7

TABLE OF CONTENTS (continued)

Section	Title	Page
	2.3.4.5 Burial Under Debris	2.3-7
	2.3.4.6 Lightning	2.3-8
	2.3.4.7 Snow and Ice	2.3-8
	2.3.4.8 Site-Specific Conditions	2.3-8
	2.3.5 Load Combination Criteria	2.3-8
2.4	Safety Protection Systems	2.4-1
2.5	Supplemental Information	2.5-1
	2.5.1 ASME Code Compliance	2.5-1
	2.5.2 FuelSolutions™ Canister Top End Closure Weld Design Basis and Nondestructive Examination Justification	2.5-15
	2.5.2.1 Introduction	2.5-15
	2.5.2.2 NUREG-1536 Criteria	2.5-15
	2.5.2.3 Background	2.5-18
	2.5.2.4 FuelSolutions™ Closure Design Description	2.5-26
	2.5.2.5 Comparison of FuelSolutions™ versus VSC-24 Canister Design Features	2.5-28
	2.5.2.6 Additional NDE and Testing Requirements	2.5-30
	2.5.2.7 Summary	2.5-32
3.	**STRUCTURAL EVALUATION**	**3-1**
3.1	Structural Design	3.1-1
	3.1.1 Discussion	3.1-1
	3.1.1.1 Shell Assembly	3.1-1
	3.1.1.2 Basket Assembly	3.1-2
	3.1.2 Design Criteria	3.1-6
	3.1.2.1 Basic Design Criteria	3.1-6
	3.1.2.2 Applicable Codes and Standards	3.1-6
	3.1.2.3 Supplemental Structural Criteria	3.1-7
3.2	Weights and Centers of Gravity	3.2-1
3.3	Mechanical Properties of Materials	3.3-1

TABLE OF CONTENTS (continued)

Section	Title	Page
3.3.1	Structural Materials	3.3-1
3.3.2	Non-Structural Materials	3.3-3
3.4	General Standards for Casks	3.4-1
3.4.1	Chemical and Galvanic Reactions	3.4-1
3.4.2	Positive Closure	3.4-2
3.4.3	Lifting Devices	3.4-2
3.4.4	Canister Service Life	3.4-4
3.5	Evaluation of Normal Conditions	3.5-1
3.5.1	Normal Temperature and Insolation Loadings	3.5-1
3.5.1.1	Summary of Pressures and Temperatures	3.5-2
3.5.1.2	Differential Thermal Expansion	3.5-2
3.5.1.3	Thermal Stress Calculations	3.5-6
3.5.1.4	Fatigue Evaluation	3.5-10
3.5.2	Internal Pressure	3.5-13
3.5.2.1	Canister Draining Internal Pressure	3.5-13
3.5.2.2	Normal Transfer and Storage Internal Pressure	3.5-14
3.5.3	Dead Weight Load	3.5-15
3.5.3.1	Canister Shell Assembly	3.5-15
3.5.3.2	Support Rods and Support Sleeves	3.5-16
3.5.3.3	Spacer Plates	3.5-17
3.5.3.4	Guide Tubes	3.5-19
3.5.4	Normal Handling	3.5-24
3.5.4.1	Vertical Canister Transfer	3.5-24
3.5.4.2	Horizontal Canister Transfer	3.5-25
3.5.4.3	On-Site Transport	3.5-26
3.5.5	Load Combinations and Comparison with Allowable Stresses	3.5-28
3.5.5.1	Canister Shell Assembly	3.5-28
3.5.5.2	Canister Basket Assembly	3.5-29
3.5.6	Cold	3.5-30

TABLE OF CONTENTS (continued)

Section	Title	Page
3.6	Evaluation of Off-Normal Conditions	3.6-1
3.6.1	Off-Normal Temperature and Insolation Loadings	3.6-1
3.6.1.1	Summary of Pressures and Temperatures	3.6-2
3.6.1.2	Differential Thermal Expansion	3.6-2
3.6.1.3	Thermal Stress Calculations	3.6-2
3.6.2	Off-Normal Internal Pressure	3.6-4
3.6.3	Cask Misalignment	3.6-4
3.6.4	Canister Opening/Reflood	3.6-5
3.6.5	Hydraulic Ram Failure During Horizontal Transfer	3.6-6
3.6.6	Off-Normal Load Combinations	3.6-6
3.6.6.1	Canister Shell Assembly	3.6-6
3.6.6.2	Canister Basket Assembly	3.6-7
3.7	Evaluation of Accident Conditions	3.7-1
3.7.1	Fully Blocked Storage Cask Inlet and Outlet Vents	3.7-2
3.7.2	Loss of Transfer Cask Neutron Shield	3.7-2
3.7.3	Storage Cask Drop	3.7-3
3.7.3.1	Canister Shell Assembly	3.7-4
3.7.3.2	Canister Basket Assembly	3.7-5
3.7.4	Storage Cask Tip-Over	3.7-12
3.7.4.1	Canister Shell Assembly Tip-over Analysis	3.7-12
3.7.4.2	Basket Assembly Tip-over Analysis	3.7-13
3.7.5	Transfer Cask Drop	3.7-20
3.7.5.1	Canister Shell Assembly Side Drop Analysis	3.7-21
3.7.5.2	Canister Basket Assembly Side Drop Analysis	3.7-22
3.7.6	Fire	3.7-31
3.7.7	Flood	3.7-31
3.7.8	Earthquake	3.7-32
3.7.8.1	Canister Shell Assembly	3.7-32
3.7.8.2	Canister Basket Assembly	3.7-32

TABLE OF CONTENTS (continued)

Section	Title	Page
3.7.9	Accident Internal Pressure	3.7-33
3.7.10	Accident Condition Load Combinations	3.7-33
3.7.10.1	Canister Shell Assembly	3.7-33
3.7.10.2	Canister Basket Assembly	3.7-34
3.8	Fuel Rods	3.8-1
3.9	Supplemental Data	3.9-1
3.9.1	Spacer Plate and Fuel Grid Spacer In-Plane Tributary Weights	3.9-1
3.9.2	Finite Element Analysis Stress Evaluation Criteria	3.9-1
3.9.2.1	Canister Shell Stress Evaluation Locations	3.9-1
3.9.2.2	Canister Shell Stress Classification	3.9-2
3.9.2.3	Spacer Plate Stress Evaluation Locations	3.9-3
3.9.3	Finite Element Model Descriptions	3.9-3
3.9.3.1	Canister Shell Axisymmetric Finite Element Models	3.9-3
3.9.3.2	Canister Shell Half-Symmetry Finite Element Models	3.9-5
3.9.3.3	Spacer Plate Models	3.9-7
3.9.3.4	Guide Tube Models	3.9-14
3.9.4	Fabrication Stresses	3.9-16
3.9.5	Canister Closure Weld Critical Flaw Size Determination	3.9-17
4.	**THERMAL EVALUATION**	**4-1**
4.1	Discussion	4.1-1
4.1.1	Design Features	4.1-1
4.1.1.1	W21 Canister	4.1-1
4.1.1.2	Storage Cask	4.1-2
4.1.1.3	Transfer Cask	4.1-3
4.1.2	Design Basis Ambient Conditions	4.1-4
4.1.3	Bounding Axial Heat Flux Profile	4.1-4
4.1.3.1	Development of Bounding Axial Heat Flux Profiles	4.1-5
4.1.3.2	Application of Axial Heat Profiles for Canister Analysis	4.1-6

TABLE OF CONTENTS (continued)

Section	Title	Page
4.1.4	Thermal Operating Modes	4.1-7
4.1.4.1	W21 Canister within Storage Cask	4.1-8
4.1.4.2	W21 Canister within Transfer Cask	4.1-8
4.1.5	Thermal Rating Summary	4.1-10
4.1.6	Canister Internal Pressure Summary	4.1-10
4.2	Summary of Thermal Properties of Materials	4.2-1
4.2.1	W21 Canister	4.2-1
4.2.2	PWR Fuel	4.2-1
4.3	Specifications for Components	4.3-1
4.3.1	W21 Canister	4.3-1
4.3.2	Fuel Cladding Allowable Temperatures	4.3-2
4.3.2.1	Cladding Temperature Decay	4.3-3
4.3.2.2	Fuel Rod Pressure and Hoop Stress	4.3-3
4.3.2.3	Long-Term Allowable Cladding Temperature	4.3-5
4.3.2.4	Short-Term Allowable Cladding Temperature	4.3-6
4.4	Thermal Evaluation for Normal Conditions of Storage	4.4-1
4.4.1	W21 Canister within Storage Cask	4.4-1
4.4.1.1	Thermal Model	4.4-1
4.4.1.2	Canister Thermal Rating	4.4-7
4.4.1.3	Maximum Temperatures	4.4-9
4.4.1.4	Minimum Temperatures	4.4-10
4.4.1.5	Internal Pressures	4.4-10
4.4.1.6	Fuel Rod Fill Gas	4.4-11
4.4.1.7	Fuel Rod Fission Gas Generation	4.4-11
4.4.1.8	PWR Control Components	4.4-13
4.4.1.9	Normal Canister Pressure	4.4-13
4.4.1.10	Maximum Thermal Stresses	4.4-14
4.4.1.11	Evaluation of Canister Performance for Normal Conditions	4.4-14
4.4.2	W21 Canister within Transfer Cask	4.4-37

TABLE OF CONTENTS (continued)

Section	Title	Page
4.4.2.1	W21 Canister Thermal Model in Transfer Cask	4.4-37
4.4.2.2	Conditions During Canister Loading	4.4-38
4.4.2.3	Conditions During Canister Reflooding	4.4-40
4.4.2.4	Maximum Temperatures	4.4-44
4.4.2.5	Minimum Temperatures	4.4-45
4.4.2.6	Internal Pressures	4.4-46
4.4.2.7	Maximum Thermal Stresses	4.4-46
4.4.2.8	Evaluation of Canister Performance for Normal Conditions	4.4-46
4.5	Thermal Evaluation for Off-Normal Conditions of Storage	4.5-1
4.5.1	W21 Canister within Storage Cask	4.5-1
4.5.1.1	Thermal Model	4.5-1
4.5.1.2	Maximum Temperatures	4.5-1
4.5.1.3	Minimum Temperatures	4.5-3
4.5.1.4	Internal Pressures	4.5-3
4.5.1.5	Maximum Thermal Stresses	4.5-3
4.5.1.6	Evaluation of Canister Performance for Off-Normal Conditions	4.5-4
4.5.2	W21 Canister within Transfer Cask	4.5-9
4.5.2.1	Thermal Model	4.5-9
4.5.2.2	Maximum Temperatures	4.5-9
4.5.2.3	Minimum Temperatures	4.5-10
4.5.2.4	Internal Pressures	4.5-10
4.5.2.5	Maximum Thermal Stresses	4.5-10
4.5.2.6	Evaluation of Canister Performance for Off-Normal Conditions	4.5-10
4.6	Thermal Evaluation for Accident Conditions of Storage	4.6-1
4.6.1	W21 Canister within Storage Cask	4.6-1
4.6.1.1	Thermal Model	4.6-1
4.6.1.2	Maximum Temperatures	4.6-2

TABLE OF CONTENTS (continued)

Section	Title	Page
4.6.1.3	Minimum Temperatures	4.6-4
4.6.1.4	Internal Pressures	4.6-4
4.6.1.5	Maximum Thermal Stresses	4.6-5
4.6.1.6	Evaluation of Canister Performance for Accident Conditions	4.6-5
4.6.2	W21 Canister within Transfer Cask	4.6-10
4.6.2.1	Thermal Model	4.6-10
4.6.2.2	Maximum Temperatures	4.6-10
4.6.2.3	Minimum Temperatures	4.6-11
4.6.2.4	Maximum Internal Pressures	4.6-11
4.6.2.5	Maximum Thermal Stresses	4.6-11
4.6.2.6	Evaluation of Canister Performance for Accident Conditions	4.6-11
4.7	Supplemental Data	4.7-1
4.7.1	Canister Internal Convection	4.7-1
4.7.2	Other Modes of Heat Transfer	4.7-6
4.7.3	Correlation With Test Data	4.7-8
4.7.4	Computer Code Descriptions	4.7-9
4.7.4.1	SINDA/FLUINT Computer Code	4.7-9
4.7.4.2	VIEWH Computer Code	4.7-9
5.	**SHIELDING EVALUATION**	**5-1**
5.1	Discussion and Results	5.1-1
5.1.1	FuelSolutions™ W21 Canister Shielding Design Features	5.1-1
5.1.2	FuelSolutions™ W21 Canister Fuel Cooling Tables	5.1-1
5.1.3	FuelSolutions™ W21 Canister Adjoint Shielding Models	5.1-1
5.2	Source Specification	5.2-1
5.2.1	Fuel Cooling Tables	5.2-1
5.2.2	Design Bases for the Fuel Cooling Tables	5.2-1
5.2.3	Special Considerations for the W21 Fuel Cooling Tables	5.2-2
5.2.4	Use of the Fuel Cooling Tables	5.2-3

TABLE OF CONTENTS (continued)

Section **Title** **Page**

5.3 Model Specification 5.3-1
5.3.1 Description of the Shielding Configuration 5.3-1
5.3.2 Shield Regional Densities 5.3-1
5.4 Shielding Evaluation 5.4-1
5.4.1 W21 Canister Adjoint Calculation Methodology 5.4-1
5.4.2 W21 Canister Adjoint Calculation Results 5.4-1
5.5 Supplemental Data 5.5-1
5.5.1 Fuel Cooling Table Domains 5.5-1

6. CRITICALITY EVALUATION 6-1
6.1 Discussion and Results 6.1-1
6.2 Spent Fuel Loading 6.2-1
6.3 Model Specification 6.3-1
6.3.1 Configuration 6.3-1
6.3.1.1 Hypothetical Accident Conditions 6.3-4
6.3.1.2 Normal Operating Condition 6.3-7
6.3.2 Material Properties 6.3-8
6.4 Criticality Evaluation 6.4-1
6.4.1 Computer Programs 6.4-1
6.4.2 Multiplication Factor 6.4-1
6.4.2.1 Multiple Package Array 6.4-1
6.5 Criticality Benchmark Experiments 6.5-1

7. CONFINEMENT 7-1
7.1 Confinement Boundary 7.1-1
7.1.1 Confinement Vessel 7.1-1
7.1.2 Confinement Penetrations 7.1-3
7.1.3 Seals and Welds 7.1-3
7.1.4 Closure 7.1-4
7.2 Requirements for Normal and Off-Normal Conditions of Storage 7.2-1

TABLE OF CONTENTS (continued)

Section	Title	Page
7.2.1	Release of Radioactive Material for Normal and Off-Normal Conditions	7.2-1
7.2.1.1	Confinement Integrity During Dry Storage	7.2-1
7.2.1.2	Control of Radioactive Material During Fuel Loading Operations	7.2-2
7.2.1.3	External Contamination Control	7.2-2
7.2.2	Pressurization of Confinement Vessel for Normal and Off-Normal Conditions	7.2-2
7.2.3	Normal and Off-Normal Doses	7.2-3
7.3	Confinement Requirements for Hypothetical Accident Conditions	7.3-1
7.3.1	Fission Products	7.3-1
7.3.1.1	Fuel Fission Gases, Volatiles, and Particulates	7.3-1
7.3.1.2	CRUD Radionuclides	7.3-2
7.3.2	Release of Contents	7.3-2
7.3.2.1	Fraction Available for Release	7.3-2
7.3.2.2	Fraction of Fuel Rods Breached	7.3-2
7.3.2.3	Atmospheric Dispersion	7.3-2
7.3.2.4	Dose Conversion Factors	7.3-2
7.3.2.5	Event Duration and Occupancy Factor	7.3-3
7.3.2.6	Canister Release Fraction	7.3-3
7.3.3	Postulated Accident Doses	7.3-3
7.3.4	Site Boundary	7.3-3
7.4	Supplemental Data	7.4-1
7.4.1	Calculation of Bounding Fuel Assembly Surface Area for Co-60 CRUD Contribution Evaluation	7.4-1
8.	**OPERATING PROCEDURES**	**8-1**
8.1	Procedures for Loading the Cask	8.1-1
9.	**ACCEPTANCE CRITERIA AND MAINTENANCE PROGRAM**	**9-1**
9.1	Acceptance Criteria	9.1-1

TABLE OF CONTENTS (continued)

Section **Title** **Page**

9.1.1 Visual Inspection and Nondestructive Examination 9.1-4
9.1.2 Structural 9.1-5
9.1.3 Leak Tests 9.1-6
9.1.4 Criticality Safety 9.1-6
9.1.5 Shielding Integrity 9.1-6
9.1.6 Thermal Acceptance 9.1-7
9.1.7 Components 9.1-7
9.1.7.1 Functional Performance Tests 9.1-7
9.1.7.2 Canister Identification Inspections 9.1-8
9.2 Maintenance Program 9.2-1
9.3 First Cask In Use Requirements 9.3-1

10. RADIATION PROTECTION 10-1
10.1 Ensuring that Occupational Radiation Exposures Are As Low As Is Reasonably Achievable (ALARA) 10.1-1
10.2 Radiation Protection Design Features 10.2-1
10.3 Estimated On-Site Collective Dose Assessment 10.3-1
10.4 Estimated Off-Site Collective Dose Assessment 10.4-1
10.4.1 Off-Site Dose for Normal Operations 10.4-1
10.4.2 Off-Site Dose for Off-Normal Conditions 10.4-1
10.4.3 Off-Site Dose for Accident Conditions 10.4-1

11. ACCIDENT ANALYSES 11-1
11.1 Off-Normal Operations 11.1-1
11.1.1 Off-Normal Temperature and Insolation Loadings 11.1-1
11.1.1.1 Postulated Cause of the Event 11.1-2
11.1.1.2 Detection of the Event 11.1-2
11.1.1.3 Summary of Event Consequences and Regulatory Compliance 11.1-2
11.1.1.4 Corrective Actions 11.1-2

TABLE OF CONTENTS (continued)

Section **Title** **Page**

11.1.2 Off-Normal Internal Pressure 11.1-3
11.1.2.1 Postulated Cause of the Event 11.1-3
11.1.2.2 Detection of the Event 11.1-3
11.1.2.3 Summary of Event Consequences and Regulatory Compliance 11.1-3
11.1.2.4 Corrective Actions 11.1-4
11.1.3 Cask Misalignment During Horizontal Canister Transfer 11.1-4
11.1.3.1 Postulated Cause of the Event 11.1-4
11.1.3.2 Detection of the Event 11.1-4
11.1.3.3 Summary of Event Consequences and Regulatory Compliance 11.1-5
11.1.3.4 Corrective Actions 11.1-5
11.1.4 Hydraulic Ram Failure During Horizontal Canister Transfer 11.1-5
11.1.4.1 Postulated Cause of the Event 11.1-5
11.1.4.2 Detection of the Event 11.1-6
11.1.4.3 Summary of Event Consequences and Regulatory Compliance 11.1-6
11.1.4.4 Corrective Action 11.1-6
11.1.5 Canister Reopening/Reflood 11.1-6
11.1.5.1 Postulated Cause of the Event 11.1-7
11.1.5.2 Detection of the Event 11.1-7
11.1.5.3 Analysis of Effects and Consequences 11.1-7
11.1.5.4 Corrective Action 11.1-8
11.1.6 Off-Normal Load Combinations 11.1-8
11.2 Accidents 11.2-1
11.2.1 Fully Blocked Storage Cask Inlet and Outlet Vents 11.2-1
11.2.1.1 Postulated Cause of the Event 11.2-2
11.2.1.2 Detection of the Event 11.2-2
11.2.1.3 Summary of Event Consequences and Regulatory Compliance 11.2-2

TABLE OF CONTENTS (continued)

Section	Title	Page
	11.2.1.4 Corrective Action	11.2-3
11.2.2	Storage Cask Drop	11.2-3
	11.2.2.1 Postulated Cause of the Event	11.2-3
	11.2.2.2 Detection of the Event	11.2-3
	11.2.2.3 Summary of Event Consequences and Regulatory Compliance	11.2-3
	11.2.2.4 Corrective Action	11.2-4
11.2.3	Storage Cask Tip Over on J-Skid	11.2-4
	11.2.3.1 Postulated Cause of the Event	11.2-4
	11.2.3.2 Detection of the Event	11.2-4
	11.2.3.3 Summary of Event Consequences and Regulatory Compliance	11.2-4
	11.2.3.4 Corrective Action	11.2-5
11.2.4	Transfer Cask Drop	11.2-6
	11.2.4.1 Postulated Cause of the Event	11.2-6
	11.2.4.2 Detection of the Event	11.2-6
	11.2.4.3 Summary of Event Consequences and Regulatory Compliance	11.2-6
	11.2.4.4 Corrective Action	11.2-7
11.2.5	Fire	11.2-7
	11.2.5.1 Postulated Cause of the Event	11.2-7
	11.2.5.2 Detection of the Event	11.2-7
	11.2.5.3 Summary of Event Consequences and Regulatory Compliance	11.2-7
	11.2.5.4 Corrective Action	11.2-8
11.2.6	Flood	11.2-8
	11.2.6.1 Postulated Cause of the Event	11.2-8
	11.2.6.2 Detection of the Event	11.2-8
	11.2.6.3 Summary of Event Consequences and Regulatory Compliance	11.2-8

TABLE OF CONTENTS (continued)

Section **Title** **Page**

11.2.6.4 Corrective Action 11.2-9
11.2.7 Earthquake 11.2-9
11.2.7.1 Postulated Cause of the Event 11.2-9
11.2.7.2 Detection of the Event 11.2-9
11.2.7.3 Summary of Event Consequences and Regulatory Compliance 11.2-10
11.2.7.4 Corrective Action 11.2-10
11.2.8 Accident Internal Pressure 11.2-10
11.2.8.1 Postulated Cause of the Event 11.2-11
11.2.8.2 Detection of the Event 11.2-11
11.2.8.3 Summary of Event Consequences and Regulatory Compliance 11.2-11
11.2.8.4 Corrective Actions 11.2-11
11.2.9 Accident Condition Load Combinations 11.2-12

12. OPERATING CONTROLS AND LIMITS 12-1
12.1 Proposed Operating Controls and Limits 12.1-1
12.2 Development of Operating Controls and Limits 12.2-1
12.3 Supplemental Data 12.3-1
12.3.1 Technical Specifications and Bases for the FuelSolutions™ W21 Canister 12.3-1

13. QUALITY ASSURANCE 13-1

14. DECOMMISSIONING 14-1

This page intentionally left blank

LIST OF TABLES

Table **Title** **Page**

Table 1.0-1 - FuelSolutions™ Storage System FSAR Regulatory Compliance Cross-Reference Matrix (16 pages) 1-9
Table 1.2-1 - Principal Characteristics of the FuelSolutions™ W21 Canister (2 pages) 1.2-14
Table 1.2-2 - Matrix of FuelSolutions™ W21 Canister Configurations 1.2-16
Table 1.2-3 - FuelSolutions™ W21 Canister Fuel Assembly Accommodation 1.2-17
Table 2.0-1 - W21 Canister Design Criteria Summary (7 Pages) 2-2
Table 2.2-1 - Fuel Assemblies Acceptable for Storage in the FuelSolutions™ W21 Canister (6 pages) 2.2-3
Table 2.3-1 - W21 Canister Load Combinations[1,2] 2.3-10
Table 2.5-1 - ASME Code Requirements Compliance Summary (13 pages) 2.5-2
Table 3.1-1 - Summary of FuelSolutions™ W21 Canister Assembly Component Functions and Design Codes 3.1-11
Table 3.1-2 - Comparison of W21 Canister Shell Assembly Configurations 3.1-12
Table 3.1-3 - W21 Canister Shell Assembly Structural Evaluation Summary (3 Pages) 3.1-13
Table 3.1-4 - W21 Canister Basket Assembly Structural Evaluation Summary (4 Pages) 3.1-16
Table 3.1-5 - Canister Confinement and Criticality Safety Component Allowable Stresses 3.1-20
Table 3.1-6 - Canister Shell Assembly Non-Confinement Component Allowable Stresses 3.1-21
Table 3.2-1 - Summary of FuelSolutions™ W21M Canister Weights and Centers of Gravity 3.2-2
Table 3.2-2 - Summary of FuelSolutions™ W21T Canister Weights and Centers of Gravity 3.2-3
Table 3.2-3 - FuelSolutions™ W21M Canister Weights and Centers of Gravity 3.2-4
Table 3.2-4 - FuelSolutions™ W21T Canister Weights and Centers of Gravity 3.2-5
Table 3.3-1 - Summary of FuelSolutions™ W21M Canister Materials 3.3-4
Table 3.3-2 - Summary of FuelSolutions™ W21T Canister Materials 3.3-5
Table 3.3-3 - Type 316 and Type 304 Stainless Steel Material Properties 3.3-6
Table 3.3-4 - Type 316 Stainless Steel Plastic Material Properties 3.3-7
Table 3.3-5 - Type XM-19 Stainless Steel Material Properties 3.3-7
Table 3.3-6 - Type 304L Stainless Steel Material Properties 3.3-8
Table 3.3-7 - SA-564, Grade 630 Age Hardened Steel Material Properties 3.3-9
Table 3.3-8 - A36 Carbon Steel Material Properties 3.3-10
Table 3.3-9 - SA-517, Grades P and F, and A514, Grades P and F Carbon Steel Material Properties 3.3-11
Table 3.3-10 - SA-106 Grade C Material Properties 3.3-12
Table 3.3-11 - Shielding Material Mechanical Properties 3.3-13
Table 3.3-12 - Neutron Absorber Material Properties 3.3-13
Table 3.5-1 - W21 Canister Temperatures for Normal Thermal Conditions 3.5-31
Table 3.5-2 - Comparison of W21 Canister Shell Assembly Temperatures for Normal Thermal Conditions 3.5-32
Table 3.5-3 - Bounding W21 Canister Shell Assembly Normal Condition Stress Summary 3.5-33
Table 3.5-4 - W21 Canister Basket Assembly Normal Condition Stress Summary 3.5-35
Table 3.5-5 - W21 Canister Shell Assembly Normal Load Combination Results Summary (2 Pages) 3.5-36
Table 3.5-6 - W21 Canister Basket Assembly Normal Load Combination Results 3.5-38
Table 3.6-1 - W21 Canister Shell Assembly Off-Normal Condition Stress Summary 3.6-8

LIST OF TABLES (continued)

Table **Title** **Page**

Table 3.6-2 - W21 Canister Shell Assembly Off-Normal Load Combination Results (2 Pages) 3.6-9
Table 3.7-1 - W21 Spacer Plate End Drop Reaction Loads for Support Rod Assembly Evaluation 3.7-36
Table 3.7-2 - W21M-LD Support Rod Allowable Loads and Stresses 3.7-37
Table 3.7-3 - W21 Support Rod Segment End Drop Results 3.7-38
Table 3.7-4 - W21 Canister Shell Assembly Accident Condition Stress Summary 3.7-39
Table 3.7-5 - W21 Canister Basket Assembly Accident Condition Stress Summary 3.7-40
Table 3.7-6 - W21 Spacer Plate Allowable Buckling Stresses 3.7-41
Table 3.7-7 - Tip-over Buckling Stresses and Interaction Ratios 3.7-42
Table 3.7-8 - Summary of W21 Spacer Plate 60*g* Side Drop Elastic Stress Analysis Results 3.7-43
Table 3.7-9 - Summary of W21 Spacer Plate 60*g* Side Drop Plastic Analysis Results 3.7-43
Table 3.7-10 - W21 Spacer Plate Side Drop Stresses and Buckling Interaction Ratios 3.7-44
Table 3.7-11 - W21 Canister Shell Assembly Accident Load Combination D1 Results 3.7-45
Table 3.7-12 - W21 Canister Shell Assembly Accident Load Combination D2 Results 3.7-46
Table 3.7-13 - W21 Canister Shell Assembly Accident Load Combination D3 Results 3.7-47
Table 3.7-14 - W21 Canister Shell Assembly Accident Load Combination D4 Results 3.7-48
Table 3.7-15 - W21 Canister Shell Assembly Accident Load Combination D5 Results 3.7-49
Table 3.7-16 - W21 Canister Basket Assembly Accident Load Combination Results 3.7-50
Table 3.8-1 - Fuel Assembly Buckling Parameters 3.8-6
Table 3.9-1 - Fuel Assembly Weight Summary and Fuel Grid Spacer Tributary Weights 3.9-20
Table 3.9-2 - FuelSolutions™ W21M-LD Spacer Plate Tributary Weights 3.9-21
Table 3.9-3 - FuelSolutions™ W21M-LS Spacer Plate Tributary Weights 3.9-22
Table 3.9-4 - FuelSolutions™ W21M-SD Spacer Plate Tributary Weights 3.9-23
Table 3.9-5 - FuelSolutions™ W21M-SS Spacer Plate Tributary Weights 3.9-24
Table 3.9-6 - Canister Shell Top Outer Closure Plate Bending Stresses with No Edge Moment Restraint 3.9-25
Table 4.1-1 - Bounding W21 Canister Heat Profile 4.1-12
Table 4.1-2 - Design Basis Thermal Cases for W21 Canister within the Storage Cask 4.1-13
Table 4.1-3 - Design Basis Load Cases for W21 Canister within the Transfer Cask 4.1-14
Table 4.1-4 - FuelSolutions™ W21 Canister Thermal Rating for Storage(1) 4.1-15
Table 4.1-5 - FuelSolutions™ W21 Canister Internal Pressures 4.1-15
Table 4.2-1 - W21 Canister Homogenous Material Properties (4 Pages) 4.2-3
Table 4.2-2 - W21 Canister Surface Emissivities 4.2-7
Table 4.2-3 - W21 Canister Material Properties, Fluids 4.2-8
Table 4.3-1 - W21 Canister Component Allowable Temperatures 4.3-8
Table 4.3-2 - Baseline PWR Rod Stress and Peak Rod Average Gas Temperature 4.3-9
Table 4.3-3 - SNF-Specific Allowable Cladding Temperatures 4.3-10
Table 4.4-1 - W21 Canister Thermal Rating in Storage Cask (Normal Hot Storage Conditions) 4.4-16
Table 4.4-2 - W21 Canister System Temperature for Heat Load Qualification in Storage Cask at Q_{max}(1) 4.4-16
Table 4.4-3 - W21 Canister System Temperature for Heat Load Qualification in Storage Cask at $LHGR_{max}$(1) 4.4-17
Table 4.4-4 - Maximum W21 Canister System Temperature at Q_{max} for Storage(1) 4.4-18

LIST OF TABLES (continued)

Table **Title** **Page**

Table 4.4-5 - Fuel Rod Gas(1) 4.4-19
Table 4.4-6 - W21 Canister Free Volume and Normal Pressures(1) 4.4-20
Table 4.4-7 - Maximum W21 Canister System Temperatures for Normal Transfer at Q_{max} (1) 4.4-48
Table 4.4-8 - Maximum W21 Canister System Temperatures for Normal Transfer at $LHGR_{max}$ (1) 4.4-49
Table 4.4-9 - W21 Canister System Temperatures During Handling(1) 4.4-50
Table 4.4-10 - W21 Canister Pressures for Normal Transfer at Q_{max}(1) 4.4-51
Table 4.5-1 - Maximum W21 Canister System Temperature at Q_{max} for Storage(1) 4.5-5
Table 4.5-2 - W21 Canister Off-Normal Pressures(1) 4.5-6
Table 4.5-3 - W21 Canister Off-Normal Pressures(1) 4.5-7
Table 4.5-4 - Maximum W21 Canister System Temperatures for Normal/Off-Normal Transfer at Q_{max} (1) 4.5-12
Table 4.5-5 - W21 Canister Pressures for Off-Normal Transfer at Q_{max} (1) 4.5-13
Table 4.6-1 - W21 Canister System Temperature for All Vents Blocked(1) 4.6-6
Table 4.6-2 - W21 Canister Accident Pressures(1) 4.6-7
Table 4.6-3 - W21 Canister Temperatures for Postulated Transfer Cask Loss of Neutron Shield Accident(1) 4.6-13
Table 4.6-4 - W21 Canister Peak Temperatures During Transfer Cask Fire Accident(1) 4.6-14
Table 5.1-1 - FuelSolutions™ W21 Canister Shielding Design Features Summary 5.1-2
Table 5.2-1 - Fuel Cooling Table W21-1-A 5.2-4
Table 5.2-2 - Fuel Cooling Table W21-1-B 5.2-5
Table 5.2-3 - Fuel Cooling Table W21-2-A 5.2-6
Table 5.2-4 - Fuel Cooling Table W21-2-B 5.2-7
Table 5.2-5 - Heat Load Criteria for Constructing the W21 Fuel Cooling Tables 5.2-8
Table 5.2-6 - Burnup-Specific Heat Load Factors 5.2-9
Table 5.2-7 - Burnup-Specific Gamma Factors 5.2-10
Table 5.2-8 - Burnup-Specific Neutron Factors 5.2-11
Table 5.3-1 - FuelSolutions™ W21 Canister Adjoint Model Parameters 5.3-2
Table 5.3-2 - FuelSolutions™ W21 Canister-Specific Regional Densities 5.3-3
Table 5.4-1 - Key W21 Canister Adjoint Model Parameters 5.4-2
Table 5.4-2 - FuelSolutions™ W21 Canister Primary Gamma Adjoint Importance Functions 5.4-3
Table 5.4-3 - FuelSolutions™ W21 Canister Secondary Gamma Adjoint Importance Functions 5.4-4
Table 5.4-4 - FuelSolutions™ W21 Canister Neutron Adjoint Importance Functions 5.4-5
Table 5.5-1 - Fuel Cooling Table W21-1-A Domains(1,2) 5.5-2
Table 5.5-2 - Fuel Cooling Table W21-1-B Domains(1,2) 5.5-3
Table 6.1-1 - W21 Canister Fuel Specification by PWR Assembly Class (2 Pages) 6.1-2
Table 6.2-1 - Specific Fuel Assembly Type Parameters (3 Pages) 6.2-2
Table 6.3-1 - Worst Case Material and Fabrication Tolerances for the FuelSolutions™ W21 Canister 6.3-9
Table 6.3-2 - UO_2 Number Densities as a Function of Enrichment 6.3-10
Table 6.3-3 - Water Number Densities as a Function of Density 6.3-11
Table 6.3-4 - Zircaloy-4 Number Densities 6.3-12
Table 6.3-5 - 304 Stainless Steel Number Densities 6.3-12
Table 6.3-6 - BORAL® Number Densities 6.3-13

LIST OF TABLES (continued)

Table **Title** **Page**

Table 6.3-7 - 316 Stainless Steel Number Densities 6.3-13
Table 6.3-8 - 517 Gr. P Carbon Steel Number Densities 6.3-14
Table 6.3-9 - XM-19 Stainless Steel Number Densities 6.3-14
Table 6.3-10 - Depleted Uranium Number Densities 6.3-15
Table 6.3-11 - Solid Neutron Shielding Number Densities 6.3-15
Table 6.4-1 - FuelSolutions™ W21 Canister Configuration Case Studies 6.4-12
Table 6.4-2 - Material and Fabrication Worst-Case Tolerance Results for the W21 Canister 6.4-13
Table 6.4-3 - Optimum Interspersed Moderator Cases Evaluated for the W21 Canister 6.4-14
Table 6.4-4 - Optimum Interior Moderator Cases Evaluated for the W21 Canister 6.4-14
Table 6.4-5 - Fuel Rod Cladding Dimension Sensitivity Analyses 6.4-15
Table 6.4-6 - Multiple Package Array, Full Loading, Hypothetical Accident Condition Results to Determine Bounding Fuel Assembly Configurations (2 Pages) 6.4-16
Table 6.4-7 - PWR Assembly USL Value Ranges 6.4-18
Table 6.4-8 - Multiple Package Array, Partial Loading, Hypothetical Accident Condition Results 6.4-18
Table 6.4-9 - Multiple Package Array, Full Loading, Normal Operating Condition Results 6.4-19
Table 6.4-10 - Multiple Package Array, Partial Loading, Normal Operating Condition Results 6.4-20
Table 6.4-11 - MCNP Results for the Single Package Models 6.4-20
Table 6.5-1 - Benchmark Critical Experiments (2 Pages) 6.5-3
Table 7.2-1 - Normal Condition Atmospheric Release Doses for FuelSolutions™ W21 Canister(1) 7.2-4
Table 7.2-2 - Off-Normal Condition Atmospheric Release Doses for FuelSolutions™ W21 Canister(1) 7.2-5
Table 7.3-1 - Accident Condition Atmospheric Release Doses for FuelSolutions™ W21 Canister(1) 7.3-4
Table 7.4-1 - Fuel Assembly Surface Area Summary 7.4-2
Table 8.1-1 - Helium Backfill Gas Quantities for the FuelSolutions™ W21 Canister (2 pages) 8.1-2
Table 9.1-1 - FuelSolutions™ W21 Canister Inspection and Test Acceptance Criteria (2 Pages) 9.1-2
Table 12.1-1 - Summary of FuelSolutions™ W21 Canister Operating Controls and Limits 12.1-2

LIST OF FIGURES

Figure **Title** **Page**

Figure 1.0-1 - FuelSolutions™ Spent Fuel Management System Elements 1-7
Figure 1.0-2 - FuelSolutions™ Storage System Certification Application Approach 1-8
Figure 1.2-1 - FuelSolutions™ Spent Fuel Management System 1.2-18
Figure 1.2-2 - FuelSolutions™ W21 Canister 1.2-19
Figure 1.2-3 - FuelSolutions™ W21 Canister Top and Bottom Closure 1.2-20
Figure 1.2-4 - FuelSolutions™ W21 Canister Basket Center Guide Tube Fuel Stop Arrangement for Partial Loading Configuration 1.2-21
Figure 2.5-1 - Original Closure Configuration 2.5-20
Figure 2.5-2 - Original Shield Plug-to-Canister Shell Weld Configuration 2.5-21
Figure 2.5-3 - Modified Canister Closure and Weld Configuration 2.5-23
Figure 2.5-4 - Modified Canister Shell Chamfer 2.5-23
Figure 2.5-5 - Localized Reduction of Top Shield Plug Outside Diameter 2.5-24
Figure 2.5-6 - Modified Top Shield Plug Design 2.5-24
Figure 2.5-7 - Enhanced Canister Closure Design Configuration 2.5-25
Figure 2.5-8 - Reduction of Shell "Draw-in" 2.5-26
Figure 2.5-9 - FuelSolutions™ Canister Closure Design 2.5-27
Figure 2.5-10 - VSC-24 Top Closure Configuration 2.5-29
Figure 2.5-11 - Outside Shell Chamfer and J-Bevel Weld Prep Nose Challenges to Angle Beam UT Examination 2.5-33
Figure 2.5-12 - Outer Closure Plate-to-Canister Shell Offset Challenge to Angle Beam UT Examination 2.5-33
Figure 2.5-13 - Weld Crown (Reinforcement) Challenge to Straight Beam UT Examination 2.5-34
Figure 2.5-14 - Outer Closure Plate Lower Chamfer and J-Bevel Weld Prep Nose Challenges to Straight Beam UT Examination 2.5-34
Figure 2.5-15 - Outer Closure Plate-to-Canister Shell Offset Challenge to Straight Beam UT Examination 2.5-35
Figure 2.5-16 - Canister Shell Chamfer and J-Bevel Weld Prep Nose Challenges to Angle Beam UT Examination 2.5-35
Figure 2.5-17 - Canister Shell Chamfer and J-Bevel Weld Prep Nose Challenges to Straight Beam UT Examination 2.5-36
Figure 3.1-1 - Expanded View of Typical FuelSolutions™ W21 Canister 3.1-22
Figure 3.1-2 - FuelSolutions™ W21 Support Rod Assembly Detail 3.1-23
Figure 3.2-1 - FuelSolutions™ W21 Canister Center of Gravity Diagram 3.2-6
Figure 3.3-1 - Type 316 Stainless Steel Stress-Strain Curve Used for Guide Tube Analysis 3.3-14
Figure 3.5-1 - W21 Canister Shell Axial Temperature Distribution for the Bounding Normal Thermal Condition 3.5-39
Figure 3.7-1 - W21 Support Sleeve End Drop Free Body Diagram 3.7-52
Figure 3.7-2 - W21 Support Rod End Drop Free Body Diagram 3.7-53
Figure 3.7-3 - W21 Carbon Steel Spacer Plate Design Thermal Gradient 3.7-54
Figure 3.7-4 - W21 Spacer Plate Deformed Shape for Combined Tip-over and Thermal Loading (Time=2.4) 3.7-55
Figure 3.7-5 - W21 Spacer Plate Side Drop Impact Orientations Evaluated 3.7-56
Figure 3.7-6 - W21 Guide Tube 60*g* Side Drop Loads for Concentrated Fuel Grid Spacer Loading Evaluation 3.7-57

LIST OF FIGURES (continued)

Figure **Title** **Page**

Figure 3.7-7 - W21 Guide Tube 60*g* Side Drop Plastic Strain for Concentrated Fuel Load At Grid Spacers 3.7-58
Figure 3.7-8 - W21 Guide Tube 60*g* Side Drop Permanent Deformation for Concentrated Fuel Load At Grid Spacers 3.7-59
Figure 3.8-1 - Fuel Rod Deflection in Post-Buckled Configuration 3.8-7
Figure 3.9-1 - Canister Shell Axisymmetric Model Stress Evaluation Locations - Top and Bottom End Regions 3.9-26
Figure 3.9-2 - Canister Shell Axisymmetric Model Stress Evaluation Locations - Cavity Region 3.9-27
Figure 3.9-3 - W21 Canister Spacer Plate Stress Evaluation Points 3.9-28
Figure 3.9-4 - Bounding Canister Shell Assembly Axisymmetric Finite Element Model, Top and Bottom End Regions 3.9-29
Figure 3.9-5 - W21 Canister Shell Assembly Half-Symmetry Finite Element Model 3.9-30
Figure 3.9-6 - W21 Canister Shell Assembly Half-Symmetry Finite Element Model, Shell Assembly Mesh 3.9-31
Figure 3.9-7 - W21 Canister Shell Assembly Half-Symmetry Finite Element Model - Spacer Plate Mesh and Loading 3.9-32
Figure 3.9-8 - W21 Spacer Plate Plane Stress Finite Element Model 3.9-33
Figure 3.9-9 - W21 Spacer Plate ½-Symmetry Multi-Span Plane-Stress Finite Element Model 3.9-34
Figure 3.9-10 - W21 Spacer Plate ½-Symmetry Multi-Span Plane-Stress Model Loads and Boundary Conditions 3.9-35
Figure 3.9-11 - W21 Spacer Plate ½-Symmetry Multi-Span Plane-Stress Model Guide Tube Loads 3.9-36
Figure 3.9-12 - W21 Spacer Plate Full Multi-Span Plane Stress Finite Element Model 3.9-37
Figure 3.9-13 - Applied Loads for 0° Transfer Cask Side Drop 3.9-38
Figure 3.9-14 - Applied Loads for 45° Transfer Cask Side Drop 3.9-39
Figure 3.9-15 - W21 Spacer Plate Full Multi-Span Shell Finite Element Model 3.9-40
Figure 3.9-16 - W21 Guide Tube 1/2-Symmetry Single Span Finite Element Model 3.9-41
Figure 3.9-17 - W21 Guide Tube ½-Symmetry Multi-Span Finite Element Model 3.9-42
Figure 4.1-1 - Design Basis Axial Heat Profiles for W21 Canister Analysis 4.1-16
Figure 4.3-1 - W21 Canister Heat Load (Q_{max}) vs. Temperature 4.3-11
Figure 4.3-2 - PWR Fuel Decay Heat Curve 4.3-12
Figure 4.3-3 - PWR Fuel Peak Cladding Temperature Decay 4.3-13
Figure 4.3-4 - PWR Fuel Peak Rod Average Gas Temperature Decay 4.3-14
Figure 4.4-1 - FuelSolutions™ W21M-SS Canister Thermal Submodel Layout 4.4-21
Figure 4.4-2 - Node Layout for W21 Canister Bottom End 4.4-22
Figure 4.4-3 - Typical Node Layout Between W21 Spacer Plates 4.4-23
Figure 4.4-4 - Typical Node Layout at W21 Spacer Plate 4.4-24
Figure 4.4-5 - Isometric View of Node Layout Between Typical Set of W21 Spacer Plates 4.4-25
Figure 4.4-6 - Node Layout for W21 Canister Mid-Length Section 4.4-26
Figure 4.4-7 - Node Layout for W21 Top End 4.4-27
Figure 4.4-8 - Modeled Flow Pattern for Horizontal W21 Canister 4.4-28
Figure 4.4-9 - Modeled Flow Pattern for Vertical W21 Canister, Horizontal Section 4.4-29

LIST OF FIGURES (continued)

Figure **Title** **Page**

Figure 4.4-10 - Modeled Flow Pattern for Vertical W21 Canister, Vertical Section 4.4-30
Figure 4.4-11 - Alignment of Thermal Submodels for Storage Cask and W21M-SS Canister 4.4-31
Figure 4.4-12 - Radial Temperature Distribution at Q_{max} for Normal Conditions of Storage 4.4-32
Figure 4.4-13 - W21 Canister Axial Temperature Distribution at Q_{max}, Normal Hot Condition in Storage Cask 4.4-33
Figure 4.4-14 - W21 Canister Axial Temperature Distribution at Q_{max}, Normal Cold Condition in Storage Cask 4.4-33
Figure 4.4-15 - Normal Hot Storage, Hottest Carbon Steel Plate 4.4-34
Figure 4.4-16 - Normal Hot Storage, Hottest Stainless Steel Plate 4.4-34
Figure 4.4-17 - Normal Cold Storage, Hottest Carbon Steel Plate 4.4-35
Figure 4.4-18 - Normal Cold Storage, Hottest Stainless Steel Plate 4.4-35
Figure 4.4-19 - W21 Canister Heat Balance within Storage Cask for Normal Hot Storage Conditions at Q_{max} 4.4-36
Figure 4.4-20 - W21 Canister Axial Temperature Distribution Prior to Reflood 4.4-52
Figure 4.4-21 - Clad Thermal Stress During Core Reflooding 4.4-53
Figure 4.4-22 - Canister Pressure During Limiting Spacer Plate Quenching 4.4-54
Figure 4.4-23 - Radial Temperature Distribution for Normal Hot Transfer Conditions at Q_{max} 4.4-55
Figure 4.4-24 - W21 Canister Axial Temperature Distribution for Normal Hot Condition in Transfer Cask at Q_{max} 4.4-56
Figure 4.4-25 - W21 Canister Axial Temperature Distribution for Normal Cold Condition in Transfer Cask at Q_{max} 4.4-57
Figure 4.4-26 - W21 Canister Axial Temperature Distribution for Normal Hot Condition in Transfer Cask at $LHGR_{max}$ 4.4-57
Figure 4.4-27 - W21 Canister Axial Temperature Distribution for Normal Cold Condition in Transfer Cask at $LHGR_{max}$ 4.4-58
Figure 4.4-28 - Temperature Distribution in Hottest Carbon Steel Spacer Plate for Normal Hot Condition in Transfer Cask 4.4-59
Figure 4.4-29 - Temperature Distribution in Hottest Stainless Steel Spacer Plate for Normal Hot Condition in Transfer Cask 4.4-60
Figure 4.4-30 - Temperature Distribution in Hottest Carbon Steel Spacer Plate for Normal Cold Condition in Transfer Cask 4.4-61
Figure 4.4-31 - Temperature Distribution in Hottest Stainless Steel Spacer Plate for Normal Cold Condition in Transfer Cask 4.4-62
Figure 4.4-32 - W21 Canister Heat Balance within Transfer Cask at Normal Hot Conditions at Q_{max} 4.4-63
Figure 4.4-33 - Transfer Cask Handling (Case 10) Transient at Q_{max} 4.4-63
Figure 4.5-1 - W21 Canister/Storage Cask Temperatures During Horizontal Unload Transient (25.1 kW) 4.5-8
Figure 4.5-2 - W21 Canister Loading Cycle Temperature Histogram For Vertical Transfer 4.5-14
Figure 4.6-1 - Storage Cask All Vents Blocked Transient with W21 Canister 4.6-8
Figure 4.6-2 - Storage Cask and Canister Response to 5-Minute Engulfing Fire 4.6-8
Figure 4.6-3 - Storage Cask and Canister Response to 5-Minute Inlet Vent Fire 4.6-9
Figure 4.6-4 - W21 Canister and Transfer Cask Fire Accident Temperature Response (0-10 minutes) 4.6-15

LIST OF FIGURES (continued)

Figure **Title** **Page**

Figure 4.6-5 - W21 Canister and Transfer Cask Fire Accident Temperature Response (0-2 hours) 4.6-15
Figure 4.7-1 - Gas Node and Flow Pattern in Horizontal Canister 4.7-11
Figure 4.7-2 - Circulation Pattern within NUHOMS® 24 Unit DSC 4.7-12
Figure 4.7-3 - Temperature Distribution in NUHOMS® 24 Unit Basket 4.7-13
Figure 4.7-4 - Double Open-Ended Cavity with Two Heated Walls 4.7-13
Figure 4.7-5 - Average Cavity Nusselt Number as a Function of Rayleigh Number and Aspect Ratio 4.7-14
Figure 4.7-6 - Gas Node Layout for Vertical Canister 4.7-15
Figure 4.7-7 - Flow Pattern for Vertical Canister 4.7-16
Figure 4.7-8 - Correlation of NUHOMS® 24 Unit DSC Test Results 4.7-16
Figure 5.3-1 - FuelSolutions™ W21 Canister Adjoint Model 5.3-4
Figure 6.3-1 - FuelSolutions™ W21 Basket (Nominal Dimensions) 6.3-16
Figure 6.3-2 - FuelSolutions™ W21 Guide Tube Assembly (Nominal Dimensions) 6.3-17
Figure 6.3-3 - FuelSolutions™ W21 Shell Assembly and Transport Cask 6.3-18
Figure 6.3-4 - Configuration for Canister Loading Specification W21-2 ..... 6.3-19
Figure 6.3-5 - Side View of Lower Portion of the W21 Canister Hypothetical Accident Conditions Model (cut-away) 6.3-20
Figure 6.3-6 - Side View of Upper Portion of the W21 Canister Hypothetical Accident Conditions Model (cut-away) 6.3-21
Figure 6.3-7 - Asymmetric Fuel Assembly Shift for the W21 Canister 6.3-22
Figure 6.3-8 - Side View of Lower Portion of the W21 Normal Conditions Model (cut-away) 6.3-23
Figure 6.3-9 - Side View of Upper Portion of the W21 Normal Conditions Model (cut-away) 6.3-24
Figure 6.3-10 - FuelSolutions™W21 Shell Assembly and Transfer Cask 6.3-25
Figure 6.4-1 - MCNP Results for the W21 Canister Interior Moderator Density Calculations (Full Loading Configuration) 6.4-21
Figure 6.4-2 - MCNP Results for the W21 Canister Interior Moderator Density Calculations (Partial Loading Configuration) 6.4-22
Figure 6.4-3 - Reactivity (k_{eff}) vs. H / U Ratio and Pellet O.D. for the B&W 15x15 Assembly Class 6.4-23
Figure 6.4-4 - Reactivity (k_{eff}) vs. H / U Ratio and Pellet O.D. for the CE 14x14 Assembly Class 6.4-24
Figure 6.4-5 - Reactivity (k_{eff}) vs. H / U Ratio and Pellet O.D. for the CE 15x15 P Assembly Class 6.4-25
Figure 6.4-6 - Reactivity (k_{eff}) vs. H / U Ratio and Pellet O.D. for the CE 16x16 Assembly Class 6.4-26
Figure 6.4-7 - Reactivity (k_{eff}) vs. H / U Ratio and Pellet O.D. for the W 14x14 Assembly Class 6.4-27
Figure 6.4-8 - Reactivity (k_{eff}) vs. H / U Ratio and Pellet O.D. for the W 15x15 Assembly Class 6.4-28
Figure 6.4-9 - Reactivity (k_{eff}) vs. H / U Ratio and Pellet O.D. for the W 17x17 Assembly Class 6.4-29
Figure 6.4-10 - Reactivity (k_{eff}) vs. H / U Ratio and Pellet O.D. for the W 17x17 A Assembly Class 6.4-30

LIST OF FIGURES (continued)

Figure **Title** **Page**

Figure 7.1-1 - FuelSolutions™ Canister Confinement Boundaries 7.1-5
Figure 7.2-1 - Normal Condition Atmospheric Release Dose vs. Distance for FuelSolutions™ W21 Canister 7.2-6
Figure 7.2-2 - Off-Normal Condition Atmospheric Release Dose vs. Distance for FuelSolutions™ W21 Canister 7.2-7
Figure 7.3-1 - Accident Condition Atmospheric Release Dose vs. Distance for FuelSolutions™ W21 Canister 7.3-5

This page intentionally left blank.

ACRONYMS AND ABBREVIATIONS

ACI	American Concrete Institute
ACTL	Activation Library
AISC	American Institute of Steel Construction
ALARA	As Low As Reasonably Achievable
ANS	American Nuclear Society
ANSI	America National Standards Institute
ASCE	American Society of Civil Engineers
ASME	American Society of Mechanical Engineers
ASME Code	ASME Boiler and Pressure Vessel Code
ASTM	American Society of Testing and Materials
AW/OS	Automated Welding/Opening System
AWS	American Welding Society
B&PV Code or BPVC	Boiler and Pressure Vessel Code
BRL	Ballistic Research Laboratory
BRP	Big Rock Point
BU	Burnup
BWR	Boiling Water Reactor
C of C	Certificate of Compliance
CE	Combustion Engineering
CFR	Code of Federal Regulations
CG	Center of Gravity
CGA	Compressed Gas Association
CISF	Centralized Interim Storage Facility
CMAA	Crane Manufacturers Association of America
CMTR	Certified Material Test Report
CNFD	Westinghouse Commercial Nuclear Fuel Division
CRUD	Chalk River Unidentified Deposits (debris/residues)
CRWMS	Civilian Radioactive Waste Management System
CS	Carbon Steel
DAR	Design Analysis Report
DBE	Design Basis Earthquake

ACRONYMS AND ABBREVIATIONS (continued)

DBT	Design Basis Tornado
DBW	Design Basis Wind
DCCG	Diffusion Controlled Cavity Growth
DFD	Design for Disassembly
DLF	Dynamic Load Factor
DM	Design Margins
DOE	U.S. Department of Energy
DU	Depleted Uranium
ENDF	Evaluated Nuclear Data File
ENDL	Evaluated Nuclear Data Library
EPFM	Elastic-Plastic Fracture Mechanics
EPRI	Electric Power Research Institute
ESBU	Westinghouse Energy Systems Business Unit
FSAR	Final Safety Analysis Report
FuelSolutions™ System	BNG Fuel Solutions Spent Fuel Management System (formerly referred to as the Wesflex™ System)
GE	General Electric
GTCC	Greater than Class C
GTSD	Government Technical Services Division
HAC	Hypothetical Accident Condition
HCN	United States Historical Climatology Network
HEPA	High Efficiency Particulate Air
HVAC	Heating, Ventilating, and Air Conditioning
ISFSI	Independent Spent Fuel Storage Installation
ISI	Inservice Inspection
ITS	Important to Safety
LLNL	Lawrence Livermore National Laboratory
LOCA	Loss-of-Coolant Accident
LSA	Low Specific Activity
LTP	Long-Term Performance
LWR	Light Water Reactor

ACRONYMS AND ABBREVIATIONS (continued)

MGDS	Mined Geological Disposal Site
MOX	Mixed Oxide
MPC	Multi-Purpose Canister
MRC	Material Review Committee
MRS	Monitored Retrievable Storage
MT	Magnetic Particle Examination
M&TE	Measuring and Testing Equipment/Instrumentation
NA or N/A	Not Applicable
NCT	Normal Conditions of Transport
NDE	Non-Destructive Examination
NDRC	National Defense Research Council
NDT	Non-Destructive Testing
NFC	Non-Fuel Components
NFPA	National Fire Protection Association
NIAC	Nuclear Industry Assessment Committee
NITS	Not Important to Safety
NLTP	Non-Long-Term Performance
NOAA	National Oceanographic and Atmospheric Agency
NP	Non-Proprietary
NPT	National Pipe Thread
NRC	U.S. Nuclear Regulatory Commission
OCRWM	Office of Civilian Radioactive Waste Management
PC	Personal Computer
PT	Liquid Penetrant Examination
PWR	Pressurized Water Reactor
QA	Quality Assurance
QMS	Quality Management System
RC	Reinforced Concrete
RG	Regulatory Guide
RT	Radiographic Examination
SAE	Society of Automotive Engineers

ACRONYMS AND ABBREVIATIONS (continued)

SAR	Safety Analysis Report
SER	Safety Evaluation Report
SFMS	Spent Fuel Management System
SNF	Spent Nuclear Fuel
SRP	Standard Review Plan
SRSS	Square Root Sum of the Squares
SS	Stainless Steel
SSC	Structures, Systems, and Components
TEDE	Total Effective Dose Equivalent
TSC	Transportable Storage Canister
U.S.	United States
USL	Upper Subcritical Limit
UT	Ultrasonic Examination
VDS	Vacuum Drying System
VT	Visual Inspection
WELCO	Westinghouse Electric Company
Wesflex™ System	Former name of the FuelSolutions™ System (any reference to Wesflex™ shall be taken to mean FuelSolutions™)
ZPA	Zero Period Acceleration

1. GENERAL DESCRIPTION

Overview

This Final Safety Analysis Report (FSAR) provides the technical basis for the design, fabrication, and operation of the FuelSolutions™ W21 canister, which is an integral component of the FuelSolutions™ Spent Fuel Management System (SFMS). In conjunction with the FuelSolutions™ Storage System FSAR, this FuelSolutions™ W21 Canister Storage FSAR serves to demonstrate compliance with the applicable requirements of 10CFR72.[1] The FuelSolutions™ W21 canister has a capacity of up to 21 Pressurized Water Reactor (PWR) spent fuel assemblies. The FuelSolutions™ W21 canister, as described and analyzed in the subsequent chapters of this FSAR, is used to safely dry store spent nuclear fuel (SNF) on-site in an Independent Spent Fuel Storage Installation (ISFSI), in accordance with the requirements of 10CFR72, and subsequently be transported off-site, in accordance with 10CFR71.[2]

The FuelSolutions™ SFMS is a fully integrated, canister-based system that provides for the storage and transport of a broad range of SNF assembly classes. The elements of the FuelSolutions™ SFMS are shown in Figure 1.0-1. The "Storage System" components of the FuelSolutions™ SFMS include the FuelSolutions™ W21 canister described in this FuelSolutions™ Canister Storage FSAR, the FuelSolutions™ storage cask and transfer cask, described in the FuelSolutions™ Storage System FSAR,[3] and various other FuelSolutions™ canisters described in their respective FuelSolutions™ Canister Storage FSARs. Taken together, these FSARs are intended to demonstrate compliance with the applicable portions of 10CFR72, Subpart L, for generic certification of the FuelSolutions™ Storage System. The organization of the FuelSolutions™ storage FSARs is shown schematically in Figure 1.0-2.

This FSAR also identifies the FuelSolutions™ SFMS support equipment that interfaces with the FuelSolutions™ W21 canister. The FuelSolutions™ SFMS support equipment is described further in the FuelSolutions™ Storage System FSAR.

The FuelSolutions™ W21 canister is classified as "important to safety" in accordance with 10CFR72, Subpart G. The safety classification of other FuelSolutions™ Storage System components and equipment is discussed in the FuelSolutions™ Storage System FSAR. Safety analyses for on-site dry storage conditions are provided only for the FuelSolutions™ W21 canister in this FSAR. Safety analyses for other FuelSolutions™ canisters are provided in their respective FuelSolutions™ Canister Storage FSARs. Safety analysis for the FuelSolutions™ W150 Storage Cask and W100 Transfer Cask are provided in the FuelSolutions™ Storage System FSAR.

---

[1] Title 10, U.S. Code of Federal Regulations, Part 72 (10CFR72), *Licensing Requirements for the Independent Storage of Spent Nuclear Fuel and High-Level Radioactive Waste*, 1995.

[2] Title 10, U.S. Code of Federal Regulations, Part 71 (10CFR71), *Packaging and Transportation of Radioactive Materials*, 1996.

[3] WSNF-220, *FuelSolutions™ Storage System Final Safety Analysis Report*, NRC Docket No. 72-1026, BNG Fuel Solutions.

By this FSAR and its companion FuelSolutions™ Storage System FSAR, generic certification of the FuelSolutions™ Storage System is sought by BNG Fuel Solutions (BFS) in accordance with 10CFR72, Subpart L. Upon review and acceptance by the U.S. Nuclear Regulatory Commission (NRC), the resulting Safety Evaluation Report (SER) and Certificate of Compliance (C of C) would include the FuelSolutions™ W21 canister, in conjunction with the reviewed and approved FuelSolutions™ W150 Storage Cask and W100 Transfer Cask for on-site dry storage of SNF at an ISFSI. The then certified FuelSolutions™ Storage System may be implemented by the licensee in accordance with the general license provisions of 10CFR72, Subpart K. The NRC-approved FuelSolutions™ storage FSARs may also be used as a reference in site-specific license applications, in accordance with 10CFR72, Subpart B.

The generic design basis and the corresponding safety analysis of the FuelSolutions™ Storage System contained in this FuelSolutions™ W21 Canister Storage FSAR and the FuelSolutions™ Storage System FSAR are intended to bound the SNF characteristics, design conditions, and interfaces that exist at the vast majority of domestic power reactor sites and potential away-from-reactor storage sites in the contiguous United States.

These FuelSolutions™ storage FSARs also provide the basis for component fabrication and acceptance, and the requirements for safe operation and maintenance of the FuelSolutions™ Storage System components, consistent with the design basis and safety analysis documented herein. In accordance with 10CFR72, Subpart K, site-specific implementation of the generically certified FuelSolutions™ Storage System requires that the licensee perform a site-specific safety evaluation, as defined in 10CFR72.212. The FuelSolutions™ Storage System FSAR identifies a limited number of conditions that are necessarily site-specific and are to be addressed in the licensee's 10CFR72.212 evaluation. These include:

- Siting of the ISFSI and design of the storage pad and security system. Site-specific demonstration of compliance with regulatory dose limits. Implementation of a site-specific ALARA program.
- An evaluation of site-specific hazards and design conditions that may exist at the ISFSI site or the transfer route between the plant's cask receiving bay and the ISFSI. These include but are not limited to explosion and fire hazards, flooding conditions, volcanism, land slides, and lightning protection.
- Determination that the physical and nucleonic characteristics and the condition of the SNF assemblies to be dry stored meet the fuel acceptance requirements of the *technical specifications* contained in the C of C.
- An evaluation of interface and design conditions that exist within the plant's fuel building in which canister fuel loading, canister closure, and canister transfer operations are to be conducted in accordance with the applicable 10CFR50[4] requirements and *technical specifications* for the plant.

[4] Title 10, U.S. Code of Federal Regulations, Part 50 (10CFR50), *Domestic Licensing of Production and Utilization Facilities*, 1995.

- Detailed site-specific operating, maintenance, and inspection procedures prepared in accordance with the generic procedures provided in the FuelSolutions™ storage FSARs and the *technical specifications* contained in the C of C.
- Performance of pre-operational testing.
- Implementation of a safeguards and accountability program in accordance with 10CFR73.[5] Preparation of a physical security plan in accordance with 10CFR73.55.
- Review of the reactor emergency plan, quality assurance (QA) program, training program, and radiation protection program.

The generic safety analyses contained in the FuelSolutions™ storage FSARs may be used as input and for guidance by the licensee in performing a 10CFR72.212 evaluation.

Licensing Approach

BFS has elected to use a modular approach to organization of the FuelSolutions™ storage FSARs, as illustrated in Figure 1.0-2, which separates the system elements that are common to all canisters from those that are canister-specific. In addition, the generic system descriptions, design criteria, and analysis methodologies applicable to the safety evaluations performed for all system components are included in the FuelSolutions™ Storage System FSAR, to the maximum extent possible. Similarly, the generic operating procedures, maintenance requirements, *technical specifications*, and QA requirements applicable to all system components are included in the FuelSolutions™ Storage System FSAR. Chapters 1 through 14 of this FuelSolutions™ W21 Canister Storage FSAR contain the following information:

1. A description of the FuelSolutions™ W21 canister, including the canister contents.
2. The design criteria specific to the FuelSolutions™ W21 canister and its contents.
3. The structural design and analysis of the FuelSolutions™ W21 canister for all loading conditions.
4. The thermal design and analysis of the FuelSolutions™ W21 canister and its contents for all design conditions.
5. Tabulation of the acceptable cooling times for each enrichment and burnup combination for the SNF assemblies qualified to be loaded into the FuelSolutions™ W21 canister. Reference to the shielding design and analysis and the resulting component dose rates contained in the FuelSolutions™ Storage System FSAR.
6. The criticality safety analysis for the FuelSolutions™ W21 canister and tabulation of the maximum acceptable initial enrichment for each SNF assembly class qualified to be loaded into the canister.
7. Reference to the methodology used for analysis of a postulated radiological release from a FuelSolutions™ canister for various conditions, including the radionuclide release fractions contained in the FuelSolutions™ Storage System FSAR. The confinement features and the resulting postulated condition dose rates for the FuelSolutions™ W21 canister.

[5] Title 10, U.S. Code of Federal Regulations, Part 73 (10CFR73), *Physical Protection of Plants and Materials*, 1995.

8. Reference to the FuelSolutions™ Storage System operating procedures contained in the FuelSolutions™ Storage System FSAR.
9. The acceptance criteria and maintenance requirements applicable to the FuelSolutions™ W21 canister.
10. Reference to the radiation protection features of the canister, representative occupational exposure estimates, and sample ISFSI dose estimates contained in the FuelSolutions™ Storage System FSAR.
11. The accident analyses for the FuelSolutions™ W21 canister.
12. The *technical specifications* that are unique to the FuelSolutions™ W21 canister, including the SNF assembly acceptance specification.
13. Reference to the QA requirements contained in the FuelSolutions™ Storage System FSAR.
14. Reference to the decommissioning assessment for the FuelSolutions™ Storage System components contained in the FuelSolutions™ Storage System FSAR.

Chapters 1 through 14 of the FuelSolutions™ Storage System FSAR contain the following information:

1. Identification of all FuelSolutions™ Storage System components and support equipment. Descriptions of the FuelSolutions™ W150 Storage Cask and W100 Transfer Cask. Summary descriptions of all support equipment that is not unique to a particular canister design, if any.
2. The design criteria applicable to all FuelSolutions™ Storage System components including canister interface requirements, excluding those specifically related to canister contents or the canister itself. The safety protection systems for the FuelSolutions™ Storage System, excluding those that are unique to a particular canister design, if any.
3. The structural design and analysis of the FuelSolutions™ W150 Storage Cask and W100 Transfer Cask for all loading conditions, including the design basis canister interface loadings.
4. The thermal design and analysis of the FuelSolutions™ W150 Storage Cask and W100 Transfer Cask for all design conditions, including the design basis canister interface thermal conditions.
5. Descriptions of the FuelSolutions™ Storage System component shielding design features, excluding those that are unique to a particular canister design, if any. The generic methodology used for fuel qualification, including that used for determination of the acceptable cooling times for combinations of initial enrichments and burnups. The shielding analysis of the FuelSolutions™ W150 Storage Cask and W100 Transfer Cask and representative component dose rates for all design conditions including the design basis canister radiological conditions, excluding those that are unique to a particular canister design, if any.
6. A summary of the criticality analysis approach. Reference to the criticality safety analysis contained in each FuelSolutions™ Canister Storage FSAR.

7. A description of the methodology used for analysis of a postulated radiological release event including the radionuclide release fractions, excluding the canister-specific radionuclide inventory and the resulting event dose rates.
8. The generic operating procedures for the FuelSolutions™ Storage System, excluding those that are unique to a particular canister design, if any.
9. The acceptance criteria and maintenance requirements applicable to the FuelSolutions™ Storage System, excluding those that are specific to the canister.
10. Descriptions of the FuelSolutions™ Storage System component radiation protection features and operational "as low as reasonably achievable" (ALARA) measures, excluding those that are unique to a particular canister design, if any. Representative occupational exposure estimates that are not unique to a particular canister design. Site dose calculations for a sample ISFSI.
11. The accident analyses of the FuelSolutions™ W150 Storage Cask and W100 Transfer Cask for all design conditions, including the design basis canister interface conditions.
12. The *technical specifications* applicable to the FuelSolutions™ Storage System, including those generically applicable to all FuelSolutions™ canisters, excluding those that are unique to a particular FuelSolutions™ canister design.
13. The QA requirements applicable to the FuelSolutions™ Storage System.
14. The decommissioning assessment for the FuelSolutions™ Storage System components, including the storage cask, transfer cask, and canister.

The purpose of this approach is that once reviewed and generically certified by the NRC, the C of C can more easily be amended to include additional or alternate FuelSolutions™ canister designs or payloads without having to re-review the information contained in the FuelSolutions™ Storage System FSAR, which is applicable to all FuelSolutions™ canisters.

To facilitate this approach, canister interface parameters with the storage cask and transfer cask such as canister size, weight, heat generation, and dose rates are established. Values for these canister interface parameters are defined in the FuelSolutions™ Storage System FSAR within which all acceptance criteria for the system are met. Using this approach, all FuelSolutions™ canisters and their contents that remain within the acceptance values established for these interface parameters, as demonstrated in the respective FuelSolutions™ Canister Storage FSAR, and that meet all the applicable acceptance criteria for the canister itself are qualified for use in the FuelSolutions™ Storage System. This will be accomplished by submittal of additional or revised FuelSolutions™ Canister Storage FSARs for review and approval by the NRC, which will rely on the FuelSolutions™ Storage System FSAR as approved by the NRC.

Safety Analysis Report Preparation

The format and content of this FSAR, and the associated FuelSolutions™ Storage System FSAR, is based on Regulatory Guide 3.61[6] and NUREG-1536.[7] The guidance provided by the

[6] Regulatory Guide 3.61, *Standard Format and Content for a Topical Safety Analysis Report for a Spent Fuel Dry Storage Cask*, U.S. Nuclear Regulatory Commission, February 1989.

NUREG-1536 review criteria on meeting the regulatory requirements is addressed by more than one FuelSolutions™ storage FSAR. Table 1.0-1 provides a matrix of the topics in NUREG-1536 and Regulatory Guide 3.61, the corresponding 10CFR72 requirements, and a reference to the applicable FuelSolutions™ storage FSAR section that addresses each topic. The formatting guidelines provided in Regulatory Guide 3.61 were closely followed when possible; however, in order to address the review criteria delineated by NUREG-1536, amended or additional subsections were added to this FSAR. In addition, this FSAR revision incorporates the changes resulting from the NRC Requests for Additional Information (RAIs) received prior to the issue date of this FSAR.

In complying with the guidance provided by NUREG-1536 and Regulatory Guide 3.61, efforts have been made to report the same information only once in the most relevant location in a particular FSAR to avoid the potential for conflicts, contradictions and ambiguities, and to facilitate the maintenance and future updates to these FSARs required by 10CFR72. Appropriate cross-references are provided to aid the reader in locating information provided elsewhere in the FSARs, when necessary to support the discussions of a particular FSAR section, rather than to repeat the same information in that section.

Off-site transport of the FuelSolutions™ W21 canister, in accordance with the requirements of 10CFR71, is addressed in a separate transportation license application.

This chapter provides a general description of the FuelSolutions™ W21 canister, drawings of the FuelSolutions™ W21 canister and related structures, systems, and components (SSCs) that are classified as important to safety, specifications for the SNF to be stored in the FuelSolutions™ W21 canister, and the qualifications of the applicant.

[7] NUREG-1536, *Standard Review Plan for Dry Cask Storage Systems*, U.S. Nuclear Regulatory Commission, January 1997.

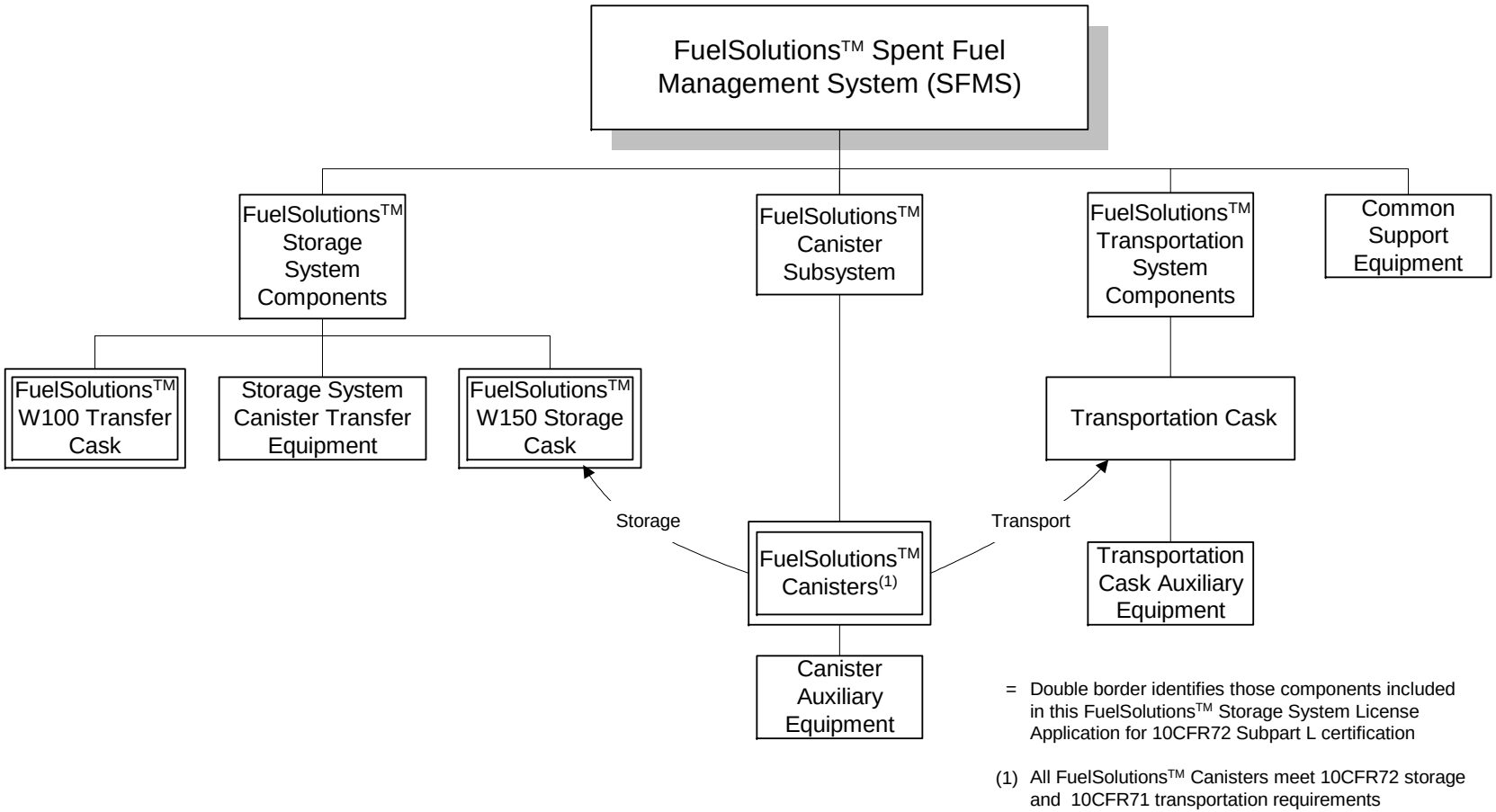

Figure 1.0-1 - FuelSolutions™ Spent Fuel Management System Elements

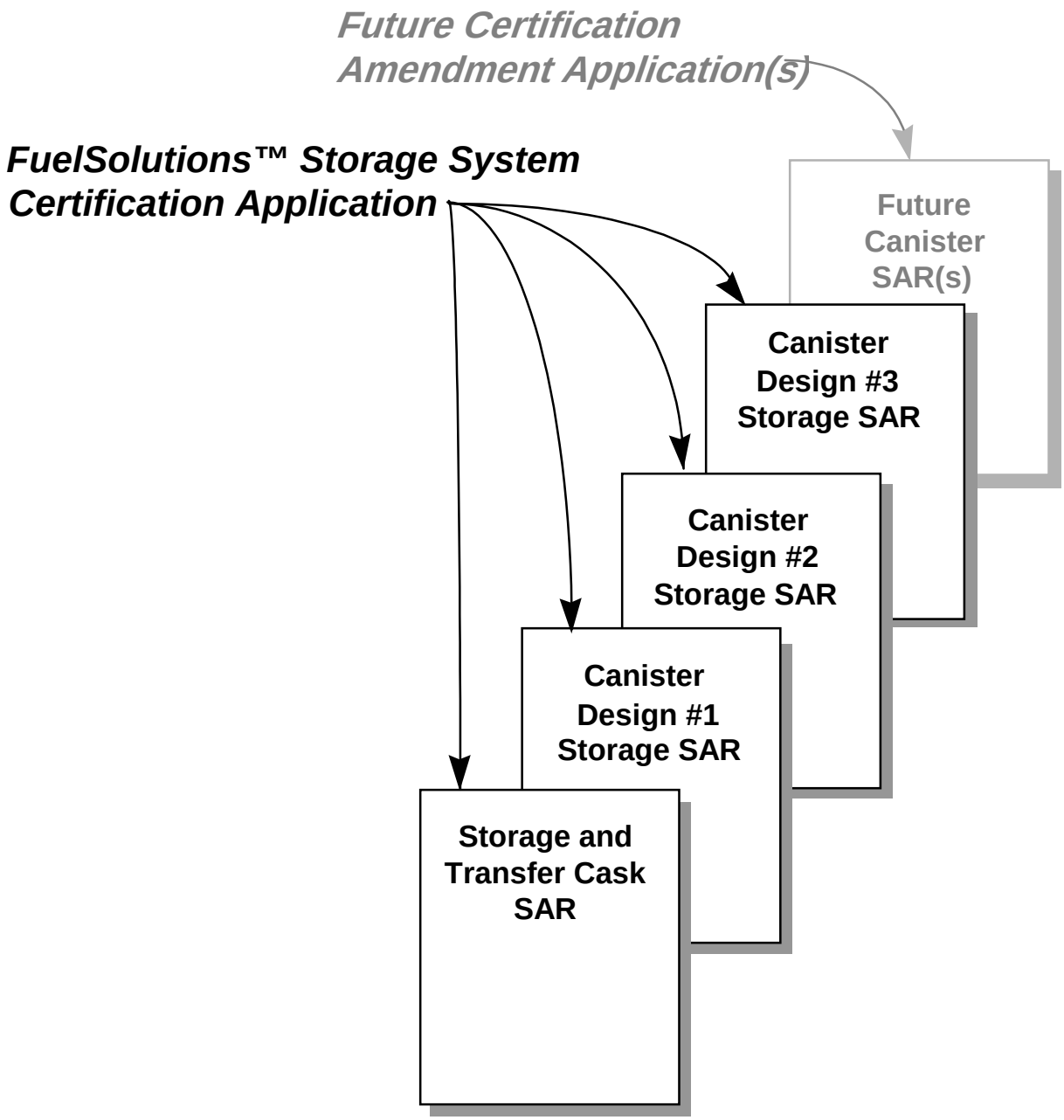

Figure 1.0-2 - FuelSolutions™ Storage System Certification Application Approach

Table 1.0-1 - FuelSolutions™ Storage System FSAR Regulatory Compliance Cross-Reference Matrix (16 pages)

Regulatory Guide 3.61 Section and Content	Associated NUREG-1536 Review Criteria	Applicable 10CFR72 or 10CFR20 Requirement	FuelSolutions™ Storage System FSAR	FuelSolutions™ Canister Storage FSAR
1. General Description				
1.1 Introduction	1.III.1 General Description & Operational Features	10CFR72.24 (b)	1.1	1.1
1.2 General Description	1.III.1 General Description & Operational Features	10CFR72.24 (b)	1.2	1.2
1.2.1 Cask Characteristics	1.III.1 General Description & Operational Features	10CFR72.24 (b)	1.2.1	1.2.1
1.2.2 Operational Features	1.III.1 General Description & Operational Features	10CFR72.24 (b)	1.2.2	1.2.2
1.2.3 Cask Contents	1.III.3 DCSS Contents	10CFR72.2 (a) (1) 10CFR72.236 (a)	--	1.2.3
1.3 Identification of Agents & Contractors	1.III.4 Qualification of the Applicant	10CFR72.24 (j) 10CFR72.28 (a)	1.3	1.3
1.4 Generic Cask Arrays	1.III.1 General Description & Operational Features	10CFR72.24 (c) (3)	1.4	--
1.5 Supplemental Data	1.III.2 Drawings	10CFR72.24 (c) (3)	1.5	1.5
NA	1.III.6 Consideration of Transport Requirements	10CFR72.230 (b) 10CFR72.236 (m)	(1)	(1)
2. Principal Design Criteria				
2.1 Spent Fuel To Be Stored	2.III.2.a Spent Fuel Specifications	10CFR72.2 (a) (1) 10CFR72.236 (a)	--	2.2

Table 1.0-1 - FuelSolutions™ Storage System FSAR Regulatory Compliance Cross-Reference Matrix (16 pages)

Regulatory Guide 3.61 Section and Content	Associated NUREG-1536 Review Criteria	Applicable 10CFR72 or 10CFR20 Requirement	FuelSolutions™ Storage System FSAR	FuelSolutions™ Canister Storage FSAR
2.2 Design Criteria for Environmental Conditions and Natural Phenomena	2.III.2.b External Conditions	10CFR72.122 (b)	2.3.4.7	--
	2.III.3.b Structural 2.III.3.c Thermal	10CFR72.122 (c)	2.3.3.4, 2.3.3.8	2.3.3.6, 2.3.4.1
		10CFR72.122 (b) (1)	2.3.1	
		10CFR72.122 (h) (1)	--	2.1.2
2.2.1 Tornado and Wind Loading	2.III.2.b External Conditions	10CFR72.122 (b)	2.3.4.2 2.3.4.3 2.3.4.5	--
2.2.2 Water Level (Flood)	2.III.2.b External Conditions 2.III.3.b Structural	10CFR72.122 (b) (2)	2.3.4.1	2.3.4.1
2.2.3 Seismic	2.III.3.b Structural	10CFR72.102 (f) 10CFR72.122 (b) (2)	2.3.4.4	2.3.4.3
2.2.4 Snow and Ice	2.III.2.b External Conditions 2.III.3.b Structural	10CFR72.122 (b)	2.3.4.8	--
2.2.5 Combined Load	2.III.3.b Structural	10CFR72.24 (d) 10CFR72.122 (b)(2)(ii)	2.3.5	2.3.5
NA	2.III.1 Structures, Systems, and Components Important to Safety	10CFR72.122 (a)	2.1.1	2.1.1
	2.III.3 Design Criteria for Safety Protection Systems	10CFR72.236 (g) 10CFR72.24 (c) (1) 10CFR72.24 (c) (2) 10CFR72.24 (c) (4) 10CFR72.120 (a) 10CFR72.236 (b)	2.1.2	2.1.2
	2.III.3.c Thermal	10CFR72.128 (a) (4)	2.1.2	2.1.2

Table 1.0-1 - FuelSolutions™ Storage System FSAR Regulatory Compliance Cross-Reference Matrix (16 pages)

Regulatory Guide 3.61 Section and Content	Associated NUREG-1536 Review Criteria	Applicable 10CFR72 or 10CFR20 Requirement	FuelSolutions™ Storage System FSAR	FuelSolutions™ Canister Storage FSAR
	2.III.3.f Operating Procedures	10CFR72.24 (f) 10CFR72.128 (a) (5)	10.1	--
		10CFR72.236 (h)	8.0	8.0
		10CFR72.24 (l) (2)	2.1.2	2.1.2
		10CFR72.236 (i)	1.2.1, 1.2.1.4.1	--
		10CFR72.24 (e) 10CFR72.104 (b)	1.2.1, 8.0, 10.1, 10.2	1.2.1, 8.0
		10CFR72.122 (l)	--	1.2.2.2
	2.III.3.g Acceptance Tests & Maintenance	10CFR72.236 (g) 10CFR72.122 (f) 10CFR72.128 (a) (1)	9.0	9.0
2.3 Safety Protection Systems	--	--	2.4	--
2.3.1 General	--	--	2.4.1	--
2.3.2 Protection by Multiple Confinement Barriers and Systems	2.III.3.b Structural	10CFR72.236 (l)	2.4.2	--
	2.III.3.c Thermal	10CFR72.236 (f)	2.4.2.2	--
	2.III.3.d Shielding/ Confinement/ Radiation	10CFR72.126 (a) 10CFR72.128 (a) (2)	2.4.5	--
	Protection	10CFR72.128 (a) (3)	2.4.2.1	--
		10CFR72.236 (d)	2.4.5, 2.4.2.1	--
		10CFR72.236 (e)	2.4.2.1	--
2.3.3 Protection by Equipment & Instrument Selection	2.III.3.d Shielding/ Confinement/ Radiation Protection	10CFR72.122 (h) (4) 10CFR72.122 (i) 10CFR72.128 (a) (1)	2.4.3	7.1

Table 1.0-1 - FuelSolutions™ Storage System FSAR Regulatory Compliance Cross-Reference Matrix (16 pages)

Regulatory Guide 3.61 Section and Content	Associated NUREG-1536 Review Criteria	Applicable 10CFR72 or 10CFR20 Requirement	FuelSolutions™ Storage System FSAR	FuelSolutions™ Canister Storage FSAR
2.3.4 Nuclear Criticality Safety	2.III.3.e Criticality	10CFR72.124 (a) 10CFR72.236 (c)	2.4.4, 6.0	6.0
		10CFR72.124 (b)	6.6	--
2.3.5 Radiological Protection	2.III.3.d Shielding/ Confinement/ Radiation Protection	10CFR72.24 (d) 10CFR72.104 (a) 10CFR72.236 (d)	10.4.1	--
		10CFR72.24 (d) 10CFR72.106 (b) 10CFR72.236 (d)	10.4.2	--
		10CFR72.24 (m)	2.4.2.1	7.3
2.3.6 Fire and Explosion Protection	2.III.3.b Structural	10CFR72.122 (c)	2.3.3.4, 2.3.3.8	--
2.4 Decommissioning Considerations	2.III.1.h Decommissioning	10CFR72.130 10CFR72.236 (i)	14	--
	14.III.1 Design	10CFR72.130	14	--
	14.III.2 Cask Decontamination	10CFR72.236 (i)	14	--
	14.III.3 Financial Assurance & Record Keeping	10CFR72.30	(2)	(2)
	14.III.4 License Termination	10CFR72.54	(2)	(2)
3. Structural Evaluation				
3.1 Structural Design	3.III.1 SSC Important to Safety	10CFR72.24 (c) (3) 10CFR72.24 (c) (4)	3.1	3.1
	3.III.6 Concrete Structures	10CFR72.182 (b) 10CFR72.182 (c)	(2)	(2)
3.2 Weights and Centers of Gravity	3.V.1.b.2 Structural Design Features	--	3.2	3.2

Table 1.0-1 - FuelSolutions™ Storage System FSAR Regulatory Compliance Cross-Reference Matrix (16 pages)

Regulatory Guide 3.61 Section and Content	Associated NUREG-1536 Review Criteria	Applicable 10CFR72 or 10CFR20 Requirement	FuelSolutions™ Storage System FSAR	FuelSolutions™ Canister Storage FSAR
3.3 Mechanical Properties of Materials	3.V.1.c Structural Materials	10CFR72.24 (c) (3)	3.3	3.3
	3.V.2.c Structural Materials			
3.4 General Standards for Casks	--	--	3.4	3.4
3.4.1 Chemical and Galvanic Reactions	3.V.1.b.2 Structural Design Features	--	3.4.1	3.4.1
3.4.2 Positive Closure	--	--	3.4.2	3.4.2
3.4.3 Lifting Devices	3.V.1.ii(4)(a) Trunnions	--	3.4.3	3.4.3
3.4.4 Heat	3.V.1.d Structural Analysis	10CFR72.24 (d) 10CFR72.122 (b) 10CFR72.236 (g)	3.5	3.5
3.4.5 Cold	3.V.1.d Structural Analysis	10CFR72.24 (d) 10CFR72.122 (b) 10CFR72.236 (g)	3.5	3.5
NA	3.V.1.d Structural Analysis	10CFR72.24 (d) 10CFR72.122 (b)	3.6	3.6
	3.V.1.d Structural Analysis	10CFR72.24 (d) 10CFR72.102 (f) 10CFR72.122 (b) 10CFR72.122 (c)	3.7	3.7
3.5 Fuel Rods	--	10CFR72.122 (h) (1)	--	3.8, 4.3.2
3.6 Supplemental Data	4.V.6 Supplemental Info.	--	--	3.6

Table 1.0-1 - FuelSolutions™ Storage System FSAR Regulatory Compliance Cross-Reference Matrix (16 pages)

Regulatory Guide 3.61 Section and Content	Associated NUREG-1536 Review Criteria	Applicable 10CFR72 or 10CFR20 Requirement	FuelSolutions™ Storage System FSAR	FuelSolutions™ Canister Storage FSAR
4. Thermal Evaluation				
4.1 Discussion	4.III Regulatory Requirements	10CFR72.24 (c) (3) 10CFR72.128 (a) (4) 10CFR72.236 (f)	4.1	4.1
		10CFR72.122 (l)	--	1.2.2.2
		10CFR72.236 (h)	8.0	8.0
4.2 Summary of Thermal Properties of Materials	4.V.4.b Material Properties	--	4.2	4.2
4.3 Specifications for Components	4.IV Acceptance Criteria	--	4.3	4.3
		10CFR72.122 (h) (1)	--	4.3.2
4.4 Thermal Evaluation for Normal Conditions of Storage	4.IV Acceptance Criteria	10CFR72.24 (d) 10CFR72.236 (g)	4.4	4.4
NA	4.IV Acceptance Criteria	10CFR72.24 (d)	4.5	4.5
	4.IV Acceptance Criteria	10CFR72.24 (d) 10CFR72.122 (c)	4.6	4.6
4.5 Supplemental Data	4.V.6 Supplemental Info.	--	4.7	4.7
5. Shielding Evaluation				
5.1 Discussion and Results	--	--	5.1	5.1
5.2 Source Specification	5.V.2 Radiation Source Definition	--	5.2	5.2
5.2.1 Gamma Source	5.V.2.a Gamma Source	--	5.2.2	5.2
5.2.2 Neutron Source	5.V.2.b Neutron Source	--	5.2.2	5.2
5.3 Model Specification	5.V.3 Shielding Model Specification	--	5.3	5.3

Table 1.0-1 - FuelSolutions™ Storage System FSAR Regulatory Compliance Cross-Reference Matrix (16 pages)

Regulatory Guide 3.61 Section and Content	Associated NUREG-1536 Review Criteria	Applicable 10CFR72 or 10CFR20 Requirement	FuelSolutions™ Storage System FSAR	FuelSolutions™ Canister Storage FSAR
5.3.1 Description of the Radial and Axial Shielding Configurations	5.V.3.a Configuration of the Shielding and Source	--	5.3.2, 5.3.3	5.3.1
5.3.2 Shield Regional Densities	5.V.3.b Material Properties	10CFR72.24 (c) (3)	5.3.4	5.3.2
5.4 Shielding Evaluation	5.V.4 Shielding Analysis	10CFR72.24 (d) 10CFR72.104 (a) 10CFR72.106 (b) 10CFR72.128 (a) (2) 10CFR72.236 (d)	5.4	5.4
5.5 Supplemental Data	5.V.5 Supplemental Info.		5.5	--
6. Criticality Evaluation				
6.1 Discussion and Results	--	--	6.1	6.1
6.2 Spent Fuel Loading	6.V.2 Fuel Specification	--	6.2	6.2
6.3 Model Specifications	6.V.3 Model Specification	--	6.3	6.3
6.3.1 Description of Calculational Model	6.V.3.a Configuration	--	--	6.3.1
6.3.2 Cask Regional Densities	6.V.3.b Material Properties	10CFR72.24 (c) (3)	--	6.3.2
6.4 Criticality Calculation	6.V.4.a Computer Programs	--	6.4	6.4
6.4.1 Calculational or Experimental Method	--	--	--	6.4.1

Table 1.0-1 - FuelSolutions™ Storage System FSAR Regulatory Compliance Cross-Reference Matrix (16 pages)

Regulatory Guide 3.61 Section and Content	Associated NUREG-1536 Review Criteria	Applicable 10CFR72 or 10CFR20 Requirement	FuelSolutions™ Storage System FSAR	FuelSolutions™ Canister Storage FSAR
6.4.2 Fuel Loading or Other Contents Loading Optimization	--	--	--	6.4.2
6.4.3 Criticality Results	6.IV Acceptance Criteria	10CFR72.24 (d) 10CFR72.124 10CFR72.236 (c)	--	6.4.2
6.5 Critical Benchmark Experiments	6.V.4.b Benchmark Comparisons	--	6.5	6.5
6.6 Supplemental Data	6.V.5 Supplemental Info.	10CFR72.236 (g)	6.6	--
7. Confinement				
7.1 Confinement Boundary	7.V.1.b Design Features	10CFR72.24 (c) (3)	--	7.1
7.1.1 Confinement Vessel	7.III.2 Protection of Spent Fuel Cladding	10CFR72.122 (h) (l)	--	7.1.1
7.1.2 Confinement Penetrations	--	--	--	7.1.2
7.1.3 Seals and Welds	--	--	--	7.1.3
7.1.4 Closure	7.III.3 Redundant Sealing	10CFR72.236 (e)	--	7.1.4
7.2 Requirements for Normal Conditions of Storage	7.III.7 Evaluation of Confinement System	10CFR72.24 (d) 10CFR72.236 (l)	--	7.2

Table 1.0-1 - FuelSolutions™ Storage System FSAR Regulatory Compliance Cross-Reference Matrix (16 pages)

Regulatory Guide 3.61 Section and Content	Associated NUREG-1536 Review Criteria	Applicable 10CFR72 or 10CFR20 Requirement	FuelSolutions™ Storage System FSAR	FuelSolutions™ Canister Storage FSAR
7.2.1 Release of Radioactive Material	7.III.6 Release of Radionuclides to the Environment	10CFR72.24 (1) (1)	--	7.2.1
	7.III.4 Monitoring of Confinement	10CFR72.122 (h) (4) 10CFR72.128 (a) (1)	--	7.2.1
	7.III.5 Instrumentation	10CFR72.24 (1) 10CFR72.122 (i)	--	7.2.1
	7.III.8 Annual Dose	10CFR72.104 (a)	--	7.2.1
7.2.2 Pressurization of Confinement Vessel	--	--	--	7.2.2
7.3 Confinement Requirements for Hypothetical Accident Conditions	7.III.7 Evaluation of Confinement System	10CFR72.24 (d) 10CFR72.122 (b) 10CFR72.236 (l)	--	7.3
7.3.1 Fission Gas Products	--	--	--	7.3.1
7.3.2 Release of Contents	--	--	7.3.2	--
NA	--	10CFR72.106(b)	--	7.3.3, 7.3.4
7.4 Supplemental Data	7.V Supplemental Info.	--	--	7.4
8. Operating Procedures				
8.1 Procedures for Loading the Cask	8.III.1 Develop Operating Procedures	10CFR72.40 (a) (5)	8.1	--
	8.III.2 Operational Restrictions for ALARA	10CFR72.24 (e) 10CFR72.104 (b)		
	8.III.3 Radioactive Effluent Control	10CFR72.24 (1) (2)		

Table 1.0-1 - FuelSolutions™ Storage System FSAR Regulatory Compliance Cross-Reference Matrix (16 pages)

Regulatory Guide 3.61 Section and Content	Associated NUREG-1536 Review Criteria	Applicable 10CFR72 or 10CFR20 Requirement	FuelSolutions™ Storage System FSAR	FuelSolutions™ Canister Storage FSAR
	8.III.4 Written Procedures	10CFR72.212 (b) (9)		
	8.III.5 Establish Written Procedures and Tests	10CFR72.234 (f)		
	8.III.6 Wet or Dry Loading and Unloading Compatibility	10CFR72.236 (h)		
	8.III.7 Cask Design Facilitate Decon	10CFR72.236 (i)	1.2.1, 1.2.1.4.1	--
8.2 Procedures for Unloading the Cask	8.III.1 Develop Operating Procedures	10CFR72.40 (a) (5)	8.2	--
	8.III.2 Operational Restrictions for ALARA	10CFR72.24 (e) 10CFR72.104 (b)		
	8.III.3 Radioactive Effluent Control	10CFR72.24 (1) (2)		
	8.III.4 Written Procedures	10CFR72.212 (b) (9)		
	8.III.5 Establish Written Procedures and Tests	10CFR72.234 (f)		
	8.III.6 Wet or Dry Loading and Unloading Compatibility	10CFR72.236 (h)		
	8.III.8 Ready Retrieval	10CFR72.122 (1)		
8.3 Preparation of the Cask	--	--	8.3	--
8.4 Supplemental Data	--	--	--	--
NA	8.III.9 Design Minimize Radwaste	10CFR72.24 (f) 10CFR72.128 (a) (5)	10.1	--
	8.III.10 SSCs Permit Inspection, Maintenance, Testing	10CFR72.122 (f)	9.0	9.0

Table 1.0-1 - FuelSolutions™ Storage System FSAR Regulatory Compliance Cross-Reference Matrix (16 pages)

Regulatory Guide 3.61 Section and Content	Associated NUREG-1536 Review Criteria	Applicable 10CFR72 or 10CFR20 Requirement	FuelSolutions™ Storage System FSAR	FuelSolutions™ Canister Storage FSAR
9. Acceptance Criteria and Maintenance Program				
9.1 Acceptance Criteria	9.III.1.a Preoperational Testing & Initial Operations	10CFR72.24 (p)	9.1	9.1
	9.III.1.c SSC Tested & Maintained to Appropriate Quality Standards	10CFR72.24 (c) 10CFR72.122 (a)		
	9.III.1.d Test Program	10CFR72.162		
	9.III.1.e Appropriate Tests	10CFR72.236 (l)		
	9.III.1.f Inspection for Cracks, Pinholes, Voids, Defects	10CFR72.236 (j)		
	9.III.1.g Provisions that Permit Commission Tests	10CFR72.232 (b)		
9.2 Maintenance Program	9.III.1.b Maintenance	10CFR72.236 (g)	9.2	9.2
	9.III.1.c SSC Tested & Maintained to Appropriate Quality Standards	10CFR72.122 (f) 10CFR72.128 (a) (1)		
	9.III.1.h Records of Maintenance	10CFR72.212. (b) (8)		
NA	9.III.2 Resolution of Issues Concerning Adequacy of Reliability	10CFR72.24 (i)	(3)	(3)
	9.III.1.d Submit Pre-op Test Results to NRC	10CFR72.82 (e)	(2)	(2)
	9.III.1.i Casks Conspicuously and Durably Marked	10CFR72.236 (k)	9.1.2.7.1, 9.1.3.7.1	9.1.7.2
	9.III.3 Cask Identification			

Table 1.0-1 - FuelSolutions™ Storage System FSAR Regulatory Compliance Cross-Reference Matrix (16 pages)

Regulatory Guide 3.61 Section and Content	Associated NUREG-1536 Review Criteria	Applicable 10CFR72 or 10CFR20 Requirement	FuelSolutions™ Storage System FSAR	FuelSolutions™ Canister Storage FSAR
10. Radiation Protection				
10.1 Ensuring that Occupational Radiation Exposures Are As Low As Is Reasonably Achievable (ALARA)	10.III.4 ALARA	10CFR20.1101 10CFR72.24 (e) 10CFR72.104 (b) 10CFR72.126 (a)	10.1	--
10.2 Radiation Protection Design Features	10.V.1.b Design Features	10CFR72.126 (a) (6)	10.2	--
10.3 Estimated Onsite Collective Dose Assessment	10.III.2 Occupational Exposures	10CFR.20.1201 10CFR20.1207 10CFR20.1208 10CFR20.1301	10.3	--
NA	10.III.3 Public Exposure	10CFR72.104 10CFR72.106	10.4	--
	10.III.1 Effluents & Direct Radiation	10CFR72.104		
11. Accident Analyses				
11.1 Off-Normal Operations	11.III.2 Meet Dose Limits for Anticipated Events	10CFR72.24 (d) 10CFR72.104 (a) 10CFR72.236 (d)	11.1	11.1
	11.III.4 Maintain Subcritical Condition	10CFR72.124 (a) 10CFR72.236 (c)		
	11.III.7 Instrumentation & Control for Off-Normal Condition	10CFR72.122 (i)		

Table 1.0-1 - FuelSolutions™ Storage System FSAR Regulatory Compliance Cross-Reference Matrix (16 pages)

Regulatory Guide 3.61 Section and Content	Associated NUREG-1536 Review Criteria	Applicable 10CFR72 or 10CFR20 Requirement	FuelSolutions™ Storage System FSAR	FuelSolutions™ Canister Storage FSAR
11.2 Accidents	11.III.1 SSC Important to Safety Designed for Accidents	10CFR72.24 (d) (2) 10CFR72.122 (b) (2) 10CFR72.122 (b) (3) 10CFR72.122 (d) 10CFR72.122 (g)	11.2	11.2
	11.III.5 Maintain Confinement for Accident	10CFR72.236 (l)		
	11.III.4 Maintain Subcritical Condition	10CFR72.124 (a) 10CFR72.236 (c)	11.2	11.2, 6.0
	11.III.3 Meet Dose Limits for Accidents	10CFR72.24 (d) (2) 10CFR72.24 (m) 10CFR72.106 (b)	11.2	11.2, 7.3
	11.III.6 Retrieval	10CFR72.122 (l)	8.2	--
	11.III.7 Instrumentation & Control for Accident Cond.	10CFR72.122 (i)	(4)	--
NA	11.III.8 Confinement Monitoring	10CFR72.122 (h) (4)	--	7.2.1
12. Operating Controls and Limits				
12.1 Proposed Operating Controls and Limits	--	10CFR72.44 (c)	12.3	12.3
	12.III.1.e Administrative Controls	10CFR72.44 (c) (5)		
12.2 Development of Operating Controls and Limits	12.III.1 General Requirement for Technical Specifications	10CFR72.24 (g) 10CFR72.26 10CFR72.44 (c) 10CFR72 Subpart E 10CFR72 Subpart F	12.3	12.3

Table 1.0-1 - FuelSolutions™ Storage System FSAR Regulatory Compliance Cross-Reference Matrix (16 pages)

Regulatory Guide 3.61 Section and Content	Associated NUREG-1536 Review Criteria	Applicable 10CFR72 or 10CFR20 Requirement	FuelSolutions™ Storage System FSAR	FuelSolutions™ Canister Storage FSAR
12.2.1 Functional and Operating Limits, Monitoring Instruments, and Limiting Control Settings	12.III.1.a Functional/ Operating Units, Monitoring Instruments and Limiting Controls	10CFR72.44 (c) (1)	12.3	12.3
12.2.2 Limiting Conditions for Operation	12.III.1.b Limiting Controls	10CFR72.44 (c) (2)	12.3	12.3
	12.III.2.a Type of Spent Fuel	10CFR72.236 (a)	--	12.3
	12.III.2.b Enrichment			
	12.III.2.c Burnup			
	12.III.2.d Minimum Acceptable Cooling Time			
	12.III.2.f Maximum Spent Fuel Loading Limit			
	12.III.2.g Weights and Dimension			
	12.III.2.h Condition of Spent Fuel			
	12.III.2.e Maximum Heat Dissipation	10CFR72.236 (a)	12.3	12.3
	12.III.2.i Inerting Atmosphere Requirements	10CFR72.236 (a)	--	12.3
12.2.3 Surveillance Specifications	12.III.1.c Surveillance Requirements	10CFR72.44 (c) (3)	12.3	--

Table 1.0-1 - FuelSolutions™ Storage System FSAR Regulatory Compliance Cross-Reference Matrix (16 pages)

Regulatory Guide 3.61 Section and Content	Associated NUREG-1536 Review Criteria	Applicable 10CFR72 or 10CFR20 Requirement	FuelSolutions™ Storage System FSAR	FuelSolutions™ Canister Storage FSAR
12.2.4 Design Features	12.III.1.d Design Features	10CFR72.44 (c) (4)	12.3	--
12.2.5 Suggested Format for Operating Controls and Limits	--	--	12.3	12.3
NA	12.III.2 SSC Design Bases & Criteria	10CFR72.236 (b)	2.1.2	2.1.2
	12.III.2 Criticality Control	10CFR72.236 (c)	2.4.4, 6.0	6.4.2
	12.III.2 Shielding and Confinement	10CFR20 10CFR72.236 (d)	5.4, 10.4	5.4, 7.2, 7.3
	12.III.2 Redundant Sealing	10CFR72.236 (e)	2.4.2.1	7.1.4
	12.III.2 Passive Heat Removal	10CFR72.236 (f)	2.4.2.2, 4.1, 4.4.1.1.1	4.1, 4.4.1
	12.III.2 20 Year Storage and Maintenance	10CFR72.236 (g)	2.1.2, 3.5, 4.4, 9.2	2.1.2, 3.5, 4.4, 9.2
	12.III.2 Decontamination	10CFR72.236 (i)	1.2.1, 1.2.1.4.1	--
	12.III.2 Wet or Dry Loading	10CFR72.236 (h)	8.0	8.0
	12.III.2 Confinement Effectiveness	10CFR72.236 (j)	9.1	9.1
	12.III.2 Evaluation for Confinement	10CFR72.236 (l)	2.4.2, 9.1	7.2, 7.3, 9.1
13. Quality Assurance				
13. Quality Assurance	1.III.5 Quality Assurance	10CFR72.24 (n) 10CFR72, Subpart G	13.0	--
	13.III Regulatory Requirements	10CFR72.24 10CFR72 Subpart G		

Table 1.0-1 Notes:

"--" There is no corresponding NUREG-1536 criteria, no applicable 10CFR72 or 10CFR20 regulatory requirement, or the item is not addressed in the particular FSAR.

"NA" There is no Regulatory Guide 3.61 section that corresponds to the NUREG-1536, 10CFR72, or 10CFR20 requirement being addressed.

(1) Transportation performance of the FuelSolutions™ canisters is evaluated in a separate transportation license application.

(2) The stated requirement is the responsibility of the licensee (i.e., utility) as part of the ISFSI and is therefore not addressed in this application.

(3) The stated requirement is not applicable to the FuelSolutions™ Storage System. The functional adequacy of all important to safety components is demonstrated by analysis and/or previously licensed designs.

(4) The stated requirement is not applicable to the FuelSolutions™ Storage System. No monitoring is required for accident conditions.

1.1 Introduction

The FuelSolutions™ SFMS is a fully integrated, canister-based system that provides for the storage and transport of a broad range of SNF assembly classes. The FuelSolutions™ SFMS is designed to be suitable for the vast majority of commercial reactor sites in the contiguous United States. The FuelSolutions™ SFMS is also designed to be suitable for the U.S. Department of Energy's (DOE) Centralized Interim Storage Facility (CISF) and the Mined Geologic Disposal Site (MGDS). In addition, it is suitable for use at private CISFs.

The FuelSolutions™ SFMS is comprised of four basic system components. These components can be used in a variety of ways to satisfy a particular licensee's requirements throughout the life of the plant and ISFSI. Together with site-specific support equipment, loaded FuelSolutions™ W21 canisters may be transferred vertically or horizontally. A synopsis for each of the four basic components of the FuelSolutions™ SFMS is as follows:

1. A *FuelSolutions™ Canister* is designed for dry storage of SNF in accordance with 10CFR72 and for transportation of SNF in accordance with 10CFR71. The canister is placed in an overpack cask for fuel loading, closure, transfer, on-site storage, and off-site transport. It provides confinement for storage, criticality control and passive heat removal for storage and transport, and biological shielding for closure and handling operations for the enclosed SNF. The canister interfaces are standardized to be compatible with each of the system cask components identified below. The FuelSolutions™ W21 canister is addressed within this FSAR for storage. Transportation of the FuelSolutions™ W21 canister is addressed in a separate transportation license application.

2. A *FuelSolutions™ W150 Storage Cask* provides passive vertical dry storage of a loaded canister in an on-site ISFSI or at an off-site CISF, in accordance with 10CFR72. The storage cask is capable of accommodating both vertical or horizontal canister transfer to the transfer cask or transportation cask. It provides biological shielding, structural protection, and passive convective heat removal for the enclosed canister and SNF. The FuelSolutions™ W150 Storage Cask is addressed in the FuelSolutions™ Storage System FSAR.

3. A *FuelSolutions™ W100 Transfer Cask* provides canister loading, closure, and handling capability, in accordance with 10CFR50 and 10CFR72. The transfer cask has the capability to be used in the following operational modes:

   a. Loading or unloading of a canister with SNF in a spent fuel pool, in a cask receiving area using a fuel assembly transfer cask and shielded loading collar, or in a shielded hot cell.

   b. Vertical transfer of a sealed canister to or from a FuelSolutions™ W150 Storage Cask inside the plant's fuel building or a licensed cask handling facility.

   c. Horizontal transfer of a sealed canister to or from a FuelSolutions™ W150 Storage Cask within an ISFSI or the licensee's owner-controlled area.

   d. Vertical transfer of a sealed canister to or from a transportation cask inside the plant's fuel building or a licensed cask handling facility.

   e. Horizontal transfer of a sealed canister to or from a transportation cask within an ISFSI or the licensee's owner-controlled area.

The FuelSolutions™ W100 Transfer Cask provides biological shielding, structural protection, and passive heat removal for the enclosed canister and SNF. The transfer cask is addressed in the FuelSolutions™ Storage System FSAR.

4. A suitable transportation cask with impact limiters, designed and licensed in accordance with 10CFR71, is used for off-site shipment of a FuelSolutions™ canister. The transportation cask can be used to load or unload a canister with SNF in a spent fuel pool or a shielded hot cell. The transportation cask can also be used to transfer a sealed canister to and from either the storage cask or the transfer cask. It provides containment, structural protection, biological shielding, and passive heat removal for the enclosed canister and SNF. The transportation cask and impact limiters are addressed in a separate transportation license application.

FuelSolutions™ W21 Canister Description. Key criteria and features of the FuelSolutions™ W21 canister design are as follows:

- The shell assembly confinement boundary for dry storage is designed, analyzed, and fabricated in accordance with the applicable provisions of the American Society of Mechanical Engineers (ASME) Code, Section III, Subsection NB.[8]
- The shell assembly structural and shielding components are designed, analyzed, and fabricated in accordance with the applicable provisions of ASME Section III, Subsection NF.[9]
- The internal basket assembly is designed, analyzed, and fabricated in accordance with the applicable provisions of ASME Section III, Subsection NG.[10]
- Thick shield plugs are provided at the canister top and bottom ends to maintain occupational exposures ALARA.
- Fixed borated neutron absorbers for criticality control are integral with the basket assembly.
- Double closure plates and seal welds are used on both ends of the canister.
- Vent, drain, instrument, and leak test ports are provided at the top end of the canister.

The design of the FuelSolutions™ W21 canister is described further in Section 1.2.1.3.

FuelSolutions™ W21 Canister Operations Overview. The principal FuelSolutions™ W21 canister storage operations performed under the plant's 10CFR50 license or a stand-alone storage facility's 10CFR72 license, in accordance with the FuelSolutions™ Storage System C of C, include the following:

- A FuelSolutions™ W21 canister is wet loaded with SNF in a spent fuel pool using conventional methods, while within a FuelSolutions™ W100 Transfer Cask.

---

[8] American Society of Mechanical Engineers (ASME) Boiler and Pressure Vessel Code, Section III, Division 1, Subsection NB, *Class 1 Components*, 1995 Edition.

[9] American Society of Mechanical Engineers (ASME) Boiler and Pressure Vessel Code, Section III, Division 1, Subsection NF, *Supports*, 1995 Edition.

[10] American Society of Mechanical Engineers (ASME) Boiler and Pressure Vessel Code, Section III, Division 1, Subsection NG, *Core Support Structures*, 1995 Edition.

- Following fuel loading, the FuelSolutions™ W21 canister is vacuum dried and helium backfilled using conventional methods. Canister seal welding uses remote automated welding equipment.
- A sealed FuelSolutions™ W21 canister is transferred vertically to or from a FuelSolutions™ W150 Storage Cask or a transportation cask, using a FuelSolutions™ W100 Transfer Cask inside the plant's (or CISF's) cask receiving bay or a licensed cask handling facility.
- Alternatively, a sealed FuelSolutions™ W21 canister can be transferred horizontally to or from a FuelSolutions™ W150 Storage Cask, using a FuelSolutions™ W100 Transfer Cask or a transportation cask within an ISFSI or CISF, or the licensee's owner-controlled area.
- A sealed FuelSolutions™ W21 canister can also be transferred horizontally to or from a transportation cask, using a FuelSolutions™ W100 Transfer Cask within an ISFSI or CISF, or the licensee's owner-controlled area.
- The FuelSolutions™ W21 canister is stored vertically in a passively cooled FuelSolutions™ W150 Storage Cask at an ISFSI or CISF.

The operation of a FuelSolutions™ W21 canister for on-site storage is described further in Section 1.2.2.

Spent Fuel to be Stored. The FuelSolutions™ W21 canister is designed to accommodate essentially all U.S. commercial intact, zircaloy-clad, PWR SNF assemblies. Additional information regarding the SNF assemblies to be stored in the FuelSolutions™ W21 canister is provided in Section 1.2.3 of this FSAR.

The FuelSolutions™ W21 canister, as designed, will also accommodate failed fuel, stainless clad fuel, mixed oxide (MOX) fuel and consolidated fuel. The corresponding safety analysis and payload specifications for these contents will be included in a future revision of this FuelSolutions™ Canister Storage FSAR.

This page intentionally left blank.

1.2 General Descriptions

The FuelSolutions™ Storage System consists of the components and equipment that provide the on-site handling, transfer, and dry storage of SNF in canisters. The primary storage components of the FuelSolutions™ Storage System are as follows:

- Canister: The FuelSolutions™ W21 canister is addressed in this FSAR.
- Storage Cask: The FuelSolutions™ W150 Storage Cask is addressed in the FuelSolutions™ Storage System FSAR.
- Transfer Cask: The FuelSolutions™ W100 Transfer Cask is addressed in the FuelSolutions™ Storage System FSAR.
- Support Equipment: The support equipment used with a FuelSolutions™ W21 canister is addressed in the FuelSolutions™ Storage System FSAR.

A schematic of the entire FuelSolutions™ SFMS, including the FuelSolutions™ Storage System components and equipment, is shown in Figure 1.2-1. This section provides a general description of the FuelSolutions™ Storage System components, with a more detailed description of the FuelSolutions™ W21 canister.

1.2.1 FuelSolutions™ Storage System Characteristics

1.2.1.1 FuelSolutions™ Storage Cask

The FuelSolutions™ storage cask is a modular reinforced concrete component that provides structural support and biological shielding for the canister and SNF. The storage cask design uses passive heat removal, with inlet and outlet air vents provided to allow ambient air to circulate within the cask to cool the canister and SNF assemblies. This passive ventilation also maintains the concrete temperatures within allowable values. The SNF assemblies are stored within a sealed FuelSolutions™ canister in a vertical orientation, providing optimum heat dissipation from a canister by the vertical annular air flow. The design of the storage cask incorporates a top cover to facilitate horizontal or vertical transfer of a canister to and from a transfer cask or transportation cask. The choices of materials used in the construction of the storage cask provide long-life, require no replacement parts, minimize periodic maintenance, and easily disassemble after use. The FuelSolutions™ W150 Storage Cask is described further in the FuelSolutions™ Storage System FSAR.

1.2.1.2 FuelSolutions™ Transfer Cask

The FuelSolutions™ transfer cask is a right circular cylindrical shielded vessel with covers on both ends, which provides structural support and biological shielding for the canister and SNF. It provides complete versatility for FuelSolutions™ canister transfer operations. The transfer cask is used to handle FuelSolutions™ canisters during fuel loading, canister closure, and on-site transfer operations. It also provides the capability for transferring loaded canisters to or from a storage cask or transportation cask in a horizontal or vertical orientation. The methods used for canister transfer are generally described as follows:

- Using the horizontal canister transfer method, the bottom end of the transfer cask is docked horizontally with the top end of the storage cask or transportation cask. The canister is then transferred using a hydraulic ram.
- Using the vertical canister transfer method, the bottom end of the transfer cask is docked with the top end of the storage cask or transportation cask and the loaded canister is transferred using a vertical lift fixture.

The FuelSolutions™ W100 Transfer Cask is described further in the FuelSolutions™ Storage System FSAR.

1.2.1.3 FuelSolutions™ W21 Canister

This section provides a description of the FuelSolutions™ W21 canister design characteristics. The specific design characteristics of other FuelSolutions™ canisters are addressed in their respective FuelSolutions™ Canister Storage FSARs.

The FuelSolutions™ W21 canister shown in Figure 1.2-2 is designed to meet the requirements of 10CFR71 and 10CFR72. The FuelSolutions™ W21 canister has a capacity for up to 21 PWR spent fuel assemblies, as discussed in Section 1.2.3. A conservative flux trap design is used that does not rely on either burnup credit or moderator exclusion for criticality control. Two overall canister lengths, plus multiple shielded end plug assembly types, accommodate a large fraction of the designated SNF assembly classes within the two standard canister lengths, without the need for internal fuel assembly spacers. The FuelSolutions™ W21 canister is shielded at both ends to facilitate and allow a full range of operational alternatives and to provide flexibility. The principal characteristics of the FuelSolutions™ W21 canister are summarized in Table 1.2-1. General arrangement drawings for the FuelSolutions™ W21 canister are provided in Section 1.5.1.

Design Characteristics

The FuelSolutions™ W21 canister subsystem includes two different classes of FuelSolutions™ canister assemblies. The two classes are as follows:

- The FuelSolutions™ W21M class Multi-Purpose Canister (MPC) for storage, transportation, and disposal.
- The FuelSolutions™ W21T class Transportable Storage Canister (TSC) for storage and transportation.

Within each class of FuelSolutions™ W21 canisters, there are four different canister types that are used to accommodate the various classes of SNF assemblies that are to be stored and transported. The four canister types include both a long and short overall canister length version. Within each standard length version there is a long internal cavity length version, which uses depleted uranium (DU) or lead for end plug shielding material, and a short internal cavity length version, which uses steel for end plug shielding material. The two classes and four canister types of the FuelSolutions™ W21 canister are listed below.

- FuelSolutions™ W21M class, with canister types:
  - LD - long external canister length with long internal cavity length and DU end plug shielding material
  - LS - long external canister length with shorter internal cavity length and steel end plug shielding material
  - SD - short external canister length with long internal cavity length and DU end plug shielding material
  - SS - short external canister length with shorter internal cavity length and steel end plug shielding material
- FuelSolutions™ W21T class, with canister types:
  - LL - long external canister length with long internal cavity length and lead end plug shielding material
  - LS - long external canister length with shorter internal cavity length and steel end plug shielding material
  - SL - short external canister length with long internal cavity length and lead end plug shielding material
  - SS - short external canister length with shorter internal cavity length and steel end plug shielding material

The configurations of the FuelSolutions™ W21 canister classes and types are described in Table 1.2-2. The fuel assembly classes accommodated by each type of FuelSolutions™ canister are provided in Table 1.2-3.

To accommodate the limited number of SNF assembly classes with shorter lengths and smaller cross-section dimensions, internal fuel assembly spacers are used within the short length, short cavity FuelSolutions™ W21 canister. These spacers provide a fuel cell cavity length and cross-section width compatible with the dimensions of the associated fuel assembly. Type I spacers provide axial and lateral spacing for shorter length, narrower width fuel assemblies. Type II spacers provide axial spacing only for shorter length fuel assemblies. A cask cavity spacer, described in the FuelSolutions™ Storage System FSAR, provides dunnage between a short FuelSolutions™ W21 canister and a FuelSolutions™ transfer cask. Drawings of the fuel assembly spacers are provided in Section 1.5.1 of this FSAR.

The FuelSolutions™ W21 canister is comprised of a shell assembly and an internal basket assembly, as shown in Figure 1.2-2. The pressure-retaining components of the FuelSolutions™ W21 canister shell assembly, i.e., the components forming the confinement boundary for storage, are designed and fabricated as an ASME Section III, Class 1 pressure vessel in accordance with the applicable requirements of Subsection NB, as discussed in Section 2.1.2 of this FSAR. These pressure-retaining components include the canister shell, the top and bottom closure plates, the ports, and the associated welds, as described below. The non-pressure-retaining components of the canister shell assembly are designed and fabricated as an ASME Section III, Class 1 component support in accordance with the applicable requirements of Subsection NF, as discussed in Section 2.1.2 of this FSAR. These non-pressure-retaining components include the

top and bottom shield plug assemblies, shell extension, bottom end plate, and the associated welds, as described below. The basket assembly is designed and fabricated as an ASME Section III core support structure in accordance with the applicable requirements of Subsection NG, as discussed in Section 2.1.2 of this FSAR. All canister shell assembly confinement boundary material and basket assembly structural materials are ASME Code-approved stainless steel or carbon steel materials.

The canister shell assembly consists of a right circular cylindrical shell with a top end inner closure plate, a top end outer closure plate, a bottom closure plate, and a bottom end plate. In addition, vent, drain, instrumentation, and leak test ports are provided. Each FuelSolutions™ W21 canister shell assembly, including both the W21M class and the W21T class canisters, contain a top and bottom end shield plug. Depleted uranium and carbon steel are used for the FuelSolutions™ W21M shield plugs. Lead and carbon steel are used for the FuelSolutions™ W21T shield plugs. The bottom end shield plugs are encased by the canister closure plate, the shell extension, and the bottom end plate. The top end DU and lead shield plugs are encased in stainless steel, while the top end carbon steel plugs are coated with electroless nickel for corrosion resistance. The FuelSolutions™ canister shell and closure plates for both the W21M and W21T class canisters are fabricated from austenitic stainless steel to provide maximum long-term corrosion protection and increased fracture toughness. The specific material designations for the FuelSolutions™ W21T and W21M class canister shell assemblies are shown on the drawings in Section 1.5.1.

The FuelSolutions™ W21 canister basket assembly consists of a series of circular spacer plates with machined openings, held in position axially by support rods that run through support rod sleeves placed between the spacer plates. The basket openings are fitted with guide tube assemblies that consist of built-up layers of an inner structural tube, borated aluminum neutron absorber sheets (BORAL®), and a thin outer wrapper. Additional product literature for BORAL® is provided in Section 1.5.2. No borated materials are formed/bent, welded, or used as structural members. The basket spacer plates, support rods, and support rod sleeves are fabricated from high strength carbon steel or stainless steel to provide maximum strength, optimize thermal performance, and minimize weight. The carbon steel basket components are coated with electroless nickel for corrosion protection following canister fabrication and during the brief period when the canister is filled with water for fuel loading. The use of electroless nickel is discussed further in Section 3.4.1. Additional product literature for electroless nickel for this application is provided in Section 1.5.2. All FuelSolutions™ W21 basket assemblies are designed for storage and transport conditions.

For the FuelSolutions™ W21T basket, all the spacer plates except for the bottom spacer plate are fabricated from high-strength carbon steel material and coated with electroless nickel. The bottom spacer plate is constructed from high-strength stainless steel to facilitate a welded attachment of the guide tube retainer clip. The support rods are constructed of a high-strength steel material, which is not susceptible to corrosion, and carbon steel support rod sleeves that are coated with electroless nickel. The FuelSolutions™ W21M basket spacer plates are constructed of high-strength stainless steel and electroless nickel-coated, high-strength carbon steel. The support rods and support rod sleeves are constructed of high-strength stainless steel. The guide tube assembly inner structural tube and wrapper are constructed of austenitic stainless steel for both the FuelSolutions™ W21T and W21M class basket assemblies. The borated aluminum

neutron absorber panels are sealed between the inner structural tube and the outer wrapper. The seams of the guide tube wrappers are continuously seal welded to minimize the amount of water that comes in contact with the BORAL®, which minimizes the time required for vacuum drying and the generation of hydrogen. The guide tube wrappers are not required to remain leak tight for the guide tube assemblies to perform their intended safety function for criticality control and heat removal. The specific material designations for the FuelSolutions™ W21T and W21M class basket assemblies are shown on the drawings in Section 1.5.1.

The FuelSolutions™ W21 canister top end closure, shown in Figure 1.2-3, consists of a shield plug, an inner closure plate with an instrument port cover, a vent port cover, a drain port cover, and an outer closure plate with a leak test port cover. The shield plug provides biological shielding after SNF is placed in the FuelSolutions™ W21 canister. The inner and outer closure plates and port covers provide redundant welded closures to assure that the canister maintains confinement function. This assures that the inert helium atmosphere, the integrity of the canister basket assemblies, and the contained SNF assemblies are maintained during storage and transportation. All FuelSolutions™ W21 canister top end closure welds are accomplished using a remote automated welding/opening system (AW/OS).

The field closure welds are designed to provide structural integrity, while minimizing heat input and distortion of the canister shell. Shop fit-up of the inner closure plate with the canister shell is carefully controlled to minimize weld shrinkage during field welding. The outer closure plate is toleranced to allow for weld shrinkage and can be installed with minimal field fit-up or grinding. All canister top end closure welds are liquid dye penetrant examined; the inner closure weld at the root and final weld passes, and the outer closure weld at the root, intermediate, and final weld passes. In addition, the top end inner closure welds (with the exception of the vent, drain, and leak test port covers) are helium pressure tested and leak tested. Additional discussion of the FuelSolutions™ canister closure is provided in Section 2.5.2 of this FSAR.

Separate drain and vent ports are provided at the top end of the FuelSolutions™ W21 canister assembly. The ports are circular and offset from the shell to facilitate automated welding. Adjacent to the drain port, a sealed instrument port is provided for canister reflooding and opening, to facilitate removal of the SNF assemblies. The port penetrations are staggered to minimize radiation streaming paths. A typical drain port is shown in Figure 1.2-3.

The drain port is connected to a tube that extends to the bottom of the canister cavity, which facilitates the removal of water from the canister during blowdown and reintroduction of water during canister reflood. The vent port is similar in design to the drain port shown in Figure 1.2-3, but does not include the drilled hole for connection of the drain tube. The side hole is open to the canister cavity. In addition, the vent port includes a small through-hole to allow the insertion of a thermocouple used to monitor canister water temperature. Both ports are used for vacuum drying and for backfilling of the cavity with helium to provide an inert atmosphere. The drain and vent ports include quick connect fittings to facilitate the connection with the vacuum drying system and to provide temporary closure of the ports, until the port covers are welded into place. Each port is labeled to preclude accidental connection of the draining, vacuum drying, and inerting equipment connections to the wrong port.

The instrument ports for the inner closure plate and the leak test port for the outer closure plate are sealed closed during canister fabrication by covers that are welded to the respective closure plate. The cover is removed prior to reflooding the canister, if canister opening and unloading is

required. The instrument port allows the canister internal pressure to be accurately monitored without compensation for the flow losses due to venting. The leak test port in the outer closure plate is similar to the instrument port in configuration. This auxiliary port can be used to perform gas sampling, helium pressure testing, and leak testing of the canister top end closure welds following canister fuel loading, if it becomes necessary.

The canister shell and bottom end plate welding, examination, pressure testing, and leak testing are performed during canister fabrication. All longitudinal and circumferential seam welds in the canister shell are 100% radiographically examined, full penetration butt welds. The canister bottom end plate includes a weld neck to facilitate a full penetration weld to the canister shell. The canister bottom end plate weld to the canister shell is 100% radiographically examined. In addition, the bottom end plate weld and canister shell seam welds are helium pressure tested and leak tested. The canister shell extension and bottom end plate attachment welds are non-pressure retaining welds and are liquid dye penetrant examined.

Physical Dimensions

The breakdown of weights for the FuelSolutions™ W21 canister classes with the associated SNF assembly classes and configurations are provided in Chapter 3 of this FSAR. The maximum loaded dry weight of a sealed FuelSolutions™ W21 canister is approximately 80,900 lbs. This is within the design criteria for use with the transfer and storage casks discussed in Section 2.2 of the FuelSolutions™ Storage System FSAR.

The overall dimensions of each type of FuelSolutions™ W21 canister are summarized in Table 1.2-2 and shown on the drawings contained in Section 1.5.1 of this FSAR. These canister dimensions conform to the standardized physical interface with the FuelSolutions™ W150 Storage Cask and W100 Transfer Cask, as discussed in the FuelSolutions™ Storage System FSAR.

Structural Capabilities

The FuelSolutions™ W21 canisters are designed for all design basis normal, off-normal, and postulated accident condition loadings, as defined in Section 2.3 of this FSAR. These include dead weight, handling loads, internal pressure, thermal expansion, cask drop loads, cask tip-over loads, and a range of loads resulting from natural phenomena. The internal basket assembly maintains the geometric spacing of the SNF assemblies, which assures criticality safety and retrievability of the SNF assemblies for all design basis loadings. Similarly, the canister shell assembly provides for confinement of radioactive materials for all design basis loadings. The structural analysis of the FuelSolutions™ W21 canister for normal, off-normal, and postulated accident conditions is provided in Chapter 3 of this FSAR. Load combinations, comparisons to allowable stresses, and the resulting design margins are also provided in Chapter 3.

Heat Removal Capabilities

The SNF assemblies stored within the FuelSolutions™ W21 canister generate decay heat, which is transferred to the canister and the storage cask or transfer cask. Removal of decay heat from the SNF assemblies to the ambient is accomplished by a combination of conduction, convection, and radiation heat transfer within and through these components. The increased conductivity of an internal helium atmosphere compared with that of air also facilitates heat removal. A FuelSolutions™ W21 canister maintains the SNF assembly cladding temperatures and the

temperatures of canister structural materials within conservative allowable temperatures during dry storage, when subjected to bounding decay heat generation rates. Further discussion of the FuelSolutions™ W21 canister thermal characteristics is provided in Chapter 4 of this FSAR. The heat dissipation and removal capabilities of the storage cask and transfer cask are discussed in the FuelSolutions™ Storage System FSAR.

Shielding and Radiation Protection

The FuelSolutions™ W21 canister contains both neutron and gamma radiation sources. The canister shell provides minimal biological shielding in the radial direction for these sources, and relies on the transfer cask and storage cask to provide sufficient biological shielding for the attenuation of neutron and gamma radiation, to maintain occupational exposures ALARA, and to satisfy regulatory requirements. Both ends of the FuelSolutions™ W21 canister provide axial gamma shielding in the form of steel closure plates and solid steel, lead, or DU shield plugs. The shielded top end of the canister provides radiological protection during canister closure and canister transfer operations. Similarly, the shielded bottom end of the canister provides radiological protection during canister transfer operations.

The canister end shielding provides sufficient axial attenuation of gamma radiation to maintain occupational exposures ALARA for all canister closure and handling operations. Temporary or portable shielding can be used as required to further attenuate radiation and streaming that may occur in the annular area between the storage cask or transfer cask and the canister during canister transfer operations. The shielding analysis of the FuelSolutions™ W21 canister is discussed further in Chapter 5 of this FSAR. An occupational dose assessment for the FuelSolutions™ W21 canister is provided in Chapter 10 of this FSAR.

Criticality Control

The FuelSolutions™ W21 canister design provides criticality control under all design basis normal, off-normal, and postulated accident conditions. The FuelSolutions™ W21 basket assembly uses a conservative “flux trap” design to maintain criticality control. The effective neutron multiplication factor, k_{eff}, meets the regulatory acceptance limits for storage and transportation conditions with optimum fresh water moderation and close reflection considering all biases and uncertainties. As discussed in Section 6.1 of the FuelSolutions™ Storage System FSAR, the design basis for criticality control is the limiting 10CFR71 transportation conditions that bound 10CFR72 storage conditions. The FuelSolutions™ W21 basket is designed to accommodate enriched fuel without the need for burnup credit, as discussed in Section 2.1.2 of this FSAR.

Neutron moderation is provided in the FuelSolutions™ W21 basket assembly by the geometric spacing of the guide tube assemblies and by borated aluminum neutron absorbing material incorporated into the guide tube assemblies. The geometric spacing is maintained by the spacer plates that support the guide tubes and the SNF assemblies. The borated neutron absorber panels are secured and sealed to the guide tubes by stainless steel wrappers. The borated neutron absorber materials in the basket are non-structural members, and no structural credit is taken for borated materials. Two alternative canister fuel loading configurations are accommodated: the first with 21 fuel assemblies and the second with 20 fuel assemblies. For the second, a mechanical fuel stop is used to block the center cell of the canister basket from being loaded. The fuel stop, which is fabricated from bar stock, sits over the top of the center guide tube, rests

within the notches formed by the flares at the top end of the guide tube, stays in place by its own deadweight, and is sized to prevent an accidental drop down a guide tube. In addition, the legs of the fuel stop are sized so that they rest upon the top spacer plate, so that an attempt to load a fuel assembly in the center position with the fuel stop in place will not result in crushing of the guide tube. The configuration is shown in Figure 1.2-4. The criticality safety design features and analysis are discussed further in Chapter 6 of this FSAR.

Confinement

The FuelSolutions™ W21 provides for confinement of all radioactive materials during dry storage. The confinement boundary for the FuelSolutions™ W21 canister is provided by the canister shell assembly, including the cylindrical shell, the redundant top end closure plates and closure welds, and the bottom end plate and weld to the canister shell.

The canister shell seam welds and the bottom end plate weld are full penetration 100% radiographed welds that are helium pressure and leak tested. The top end inner closure plate-to-canister shell weld is a multi-pass weld. The root and final passes of this weld are dye-penetrant examined and subjected to a helium pressure test and leak test. The top end outer closure plate-to-canister shell weld is also a multi-pass weld. The root pass, intermediate pass, and final pass of this weld are dye-penetrant examined, and the weld is subjected to a helium leak test. The internal helium atmosphere provides corrosion protection and facilitates heat removal, to assure that the integrity of the SNF assembly cladding during dry storage is maintained. The confinement design features and analysis for the FuelSolutions™ W21 canister are discussed further in Chapter 7 of this FSAR.

1.2.1.4 FuelSolutions™ Support Equipment

The FuelSolutions™ SFMS support equipment used to facilitate FuelSolutions™ W21 canister loading, closure, and transfer operations is shown schematically in Figure 1.2-1 and described in the sections that follow. Generally, this equipment is commercial grade equipment designed for high reliability in a heavy industrial environment. The safety classification for the FuelSolutions™ support equipment is provided in the sections that follow. Although this equipment is generally classified as not important to safety or safety related, calibration and preoperational testing of some equipment is performed to assure proper interface with system components and equipment that are classified as important to safety or safety related.

Descriptions of the FuelSolutions™ support equipment are provided in Section 1.2.1.4 of the FuelSolutions™ Storage System FSAR to facilitate a complete understanding of FuelSolutions™ Storage System operations and the basic design features of this equipment. The support equipment identified herein, or alternate equivalent equipment, may be used consistent with the design basis for the FuelSolutions™ W21 canister and other FuelSolutions™ Storage System components and equipment that are classified as important to safety or safety related. The safety classification of the FuelSolutions™ support equipment is discussed further in Section 2.1.1 of the FuelSolutions™ Storage System FSAR.

1.2.1.4.1 Canister Closure/Opening Equipment

The support equipment used for FuelSolutions™ W21 canister closure and opening operations is described in Section 1.2.1.4.1 of the FuelSolutions™ Storage System FSAR. This equipment is classified as not important to safety and includes the following:

- Annulus Seal
- Shield Plug Retainers
- Vacuum Drying System
- Inner Closure Plate Strongback
- Automated Welding/Opening System
- Helium Leak Detection System

1.2.1.4.2 Equipment for Horizontal Canister Transfer

The support equipment used for horizontal transfer of the FuelSolutions™ W21 canister is described in Section 1.2.1.4.2 of the FuelSolutions™ Storage System FSAR. With the exception of the storage cask impact limiter, which is classified as important to safety, this equipment is classified as not important to safety and includes the following:

- Horizontal Transfer Trailer
- Horizontal Transfer Skid
- Hydraulic Ram System
- Upender/Downender
- Storage Cask Impact Limiter
- Horizontal Lid Handling Fixture

1.2.1.4.3 Equipment for Vertical Canister Transfer

The support equipment used for vertical transfer of the FuelSolutions™ W21 canister is described in Section 1.2.1.4.3 of the FuelSolutions™ Storage System FSAR. With the exception of the vertical canister lift fixture, which is classified as safety related, this equipment is classified as not important to safety. Equipment for vertical canister transfer includes the following:

- Vertical Transporter
- Vertical Transport Trailer
- Air Pallet System
- Vertical Canister Lift Fixture

1.2.1.4.4 Common Equipment for Horizontal or Vertical Canister Transfer

The support equipment common to both horizontal or vertical transfer of the FuelSolutions™ W21 canister is described in Section 1.2.1.4.4 of the FuelSolutions™ Storage System FSAR. With the exceptions of the cask lifting yoke and the empty canister lift fixture (classified as safety related), and the cask cavity axial spacer (classified as important to safety), this equipment is classified as not important to safety. Equipment common to both horizontal and vertical canister transfer includes the following:

- Cask Lifting Yoke
- Cask Cavity Axial Spacer
- Docking Collar
- Cask Restraints
- Empty Canister Lift Fixture
- Standard Lifting Slings

1.2.2 Operational Features

A description of the FuelSolutions™ Storage System operational design features and a system operations overview is provided in Section 1.2.2 of the FuelSolutions™ Storage System FSAR. This section provides a description of the operational design features for the FuelSolutions™ W21 canister and an overview of the FuelSolutions™ Storage System operations using the FuelSolutions™ W21 canister. Specific operating procedures are provided in Chapter 8 of the FuelSolutions™ Storage System FSAR.

FuelSolutions™ W21 Canister

The FuelSolutions™ W21 canister incorporates several design features to facilitate canister fuel loading, closure, and transfer operations. These features include the following:

- Top and bottom end shield plugs, which allow vertical or horizontal canister transfer.
- Quick connect fittings for canister draining, drying, inerting, and leak testing.
- An inner closure plate instrument port to monitor canister internal pressure during reflood operations.
- An auxiliary outer closure plate leak test port for canister closure weld leak testing following canister fuel loading, if it becomes necessary.
- Threaded counterbores on the top end outer closure plate for vertical lifting fixture attachment and installation of the horizontal transfer pintle.
- Threaded counterbores on the bottom end plate for installation of the horizontal transfer pintle plate.

FuelSolutions™ W150 Storage Cask

The FuelSolutions™ W150 Storage Cask design incorporates several design features that facilitate the transfer of a FuelSolutions™ canister between a storage cask and a transfer or transportation cask. Key operational features of the storage cask are discussed further in Section 1.2.2 of the FuelSolutions™ Storage System FSAR.

FuelSolutions™ W100 Transfer Cask

The FuelSolutions™ W100 Transfer Cask is designed to facilitate FuelSolutions™ canister loading, closure, and transfer to and from the storage cask or transportation cask. Key operational features of the transfer cask are discussed further in Section 1.2.2 of the FuelSolutions™ Storage System FSAR.

1.2.2.1 Canister Loading

The FuelSolutions™ W21 canister is designed to be loaded in a spent fuel pool using either a transfer cask or a transportation cask, consistent with the plant's crane capacity. The basic operations are discussed further in Section 1.2.2.1 of the FuelSolutions™ Storage System FSAR.

1.2.2.2 Canister Closure/Opening

Canister Closure

After canister fuel loading operations are completed, a loaded cask is typically staged in the cask decontamination area for canister drying, inerting, and sealing operations. Equipment descriptions and the basic operations for canister closure are discussed further in Sections 1.2.1.4.1 and 1.2.2.2, respectively, of the FuelSolutions™ Storage System FSAR.

Canister Opening

In the unlikely event that FuelSolutions™ W21 canister opening is required, the canister is retrieved from the storage cask into the transfer cask and staged in the cask decontamination area. The canister opening sequence involves reflooding the cavity with fuel pool water, removing the outer and inner closure plates, lowering the transfer cask into the fuel pool, removing the shield plug, and unloading SNF assemblies from the canister basket into the spent fuel pool. Equipment descriptions and the basic operations for canister opening are discussed further in Sections 1.2.1.4.1 and 1.2.2.2, respectively, of the FuelSolutions™ Storage System FSAR.

1.2.2.3 Canister Horizontal Transfer

The FuelSolutions™ W21 canister is designed for horizontal canister transfer between a transfer cask and a storage cask or transportation cask, and between a storage cask and a transportation cask. Equipment descriptions and the basic operations for horizontal canister transfer are discussed further in Sections 1.2.1.4.2 and 1.2.2.3, respectively, of the FuelSolutions™ Storage System FSAR.

1.2.2.4 Canister Vertical Transfer

The FuelSolutions™ W21 canister is designed for vertical canister transfer between a transfer cask and a storage cask, and between a transfer cask and a transportation cask. Equipment descriptions and the basic operations for vertical canister transfer are discussed further in Sections 1.2.1.4.3 and 1.2.2.4, respectively, of the FuelSolutions™ Storage System FSAR.

1.2.2.5 Storage

On-site FuelSolutions™ W21 canister storage with the FuelSolutions™ Storage System is accomplished by arranging freestanding vertical FuelSolutions™ W150 Storage Casks in arrays on an ISFSI pad. The basic operations for storage are discussed further in Section 1.2.2.5 of the FuelSolutions™ Storage System FSAR.

1.2.2.6 Transportation Cask Loading

A transportation cask can be used to directly load FuelSolutions™ W21 canisters in a plant's spent fuel pool and to ship FuelSolutions™ W21 canisters off-site. The components and

operational features related to the transportation cask are discussed in a separate transportation license application. Horizontal and vertical canister transfers between a storage cask, a transportation cask, and a transfer cask are discussed further in Section 1.2.2.6 of the FuelSolutions™ Storage System FSAR.

1.2.3 FuelSolutions™ W21 Canister Contents

A FuelSolutions™ W21 canister is designed to accommodate essentially all domestic commercial PWR fuel assembly classes within the designated FuelSolutions™ W21 canister class and type, without the need for fuel assembly spacers, as discussed in Section 1.2.1.3. The exceptions include the following, which are not accommodated at this time:

- Haddam Neck SNF assemblies,
- Indian Point 1 SNF assemblies,
- San Onofre 1 SNF assemblies,
- South Texas SNF assemblies,
- CE 16 x 16 and System 80 SNF assemblies with control components.

The SNF assembly classes accommodated by FuelSolutions™ W21 canisters, and the corresponding canister class and type to be used, are identified in Table 1.2-3. Up to 21 SNF assemblies can be stored in a FuelSolutions™ W21 canister. The SNF assemblies must be intact zircaloy-clad fuel assemblies. Depending on the canister type and fuel class, fuel assembly control components can also be stored integral with the fuel assemblies in a FuelSolutions™ W21 canister. The design criteria for FuelSolutions™ W21 canister contents, including the specific fuel assembly types within a fuel assembly class and the associated fuel parameters, are provided in Section 2.2 of this FSAR.

Qualification of SNF assemblies for dry storage in the FuelSolutions™ W21 canister for the fuel assembly classes identified in Table 1.2-3 is dependent on the characteristics of the unburned fuel assembly, the characteristics of the fuel assembly at the time of reactor discharge, and the time since discharge (cooling time). Fuel assembly classes with a range of acceptable enrichments, burnups, and cooling times are defined in the *technical specification* contained in Section 12.3 of this FSAR, consistent with the design basis safety evaluations of the FuelSolutions™ W21 canister contained in this FSAR for use by the licensee in qualifying SNF assemblies for dry storage. The values of the fuel assembly parameters that form the basis for the safety evaluation documented herein are included in Table 2.0-1 of this FSAR.

A FuelSolutions™ W21 canister internal cavity is backfilled with helium following fuel loading and canister drying during canister closure operations. The SNF payload remains in an inert environment throughout dry storage. The design basis normal, off-normal, and postulated accident condition canister internal pressures are included in Table 2.0-1 of this FSAR.

As discussed in Section 2.2, any FuelSolutions™ W21 canister and SNF assemblies that do not exceed the rated storage cask or transfer cask maximum thermal rating may be safely stored and handled by these casks. Similarly, any FuelSolutions™ W21 canister and SNF assemblies that do not exceed the design basis storage cask allowable dose rates, as discussed in Section 2.2, may be safely stored and handled by these casks.

A FuelSolutions™ W21 canister, as designed, will also accommodate failed fuel, stainless clad fuel, MOX fuel and consolidated fuel. The corresponding safety analysis and payload specifications for these contents will be included in a future revision of this FuelSolutions™ W21 Canister Storage FSAR.

Table 1.2-1 - Principal Characteristics of the FuelSolutions™ W21 Canister (2 pages)

Characteristic	W21M				W21T			
	LD(1)	LS(1)	SD(1)	SS(1)	LL(1)	LS(1)	SL(1)	SS(1)
Gross Weight (empty) - nominal	45,000 lbs.	45,600 lbs.	44,200 lbs.	44,200 lbs.	42,600 lbs.	44,600 lbs.	42,300 lbs.	43,200 lbs.
Materials of Construction(2)	Stainless Steel							
Materials Used As Neutron Absorbers and Moderators	BORAL®							
External Dimensions: Diameter	66 inches							
Length (max.)	192.3 in.	192.3 in.	182.3 in.	182.3 in.	192.3 in.	192.3 in.	182.3 in.	182.3 in.
Cavity Size: Diameter	64.8 inches							
Length (min.)	180.0 in.	173.0 in.	167.5 in.	163.0 in.	178.5 in.	173.0 in.	167.4 in.	163.0 in.
Internal Structures	Coated Carbon Steel and Stainless Steel Spacer Plate and Support Rod Basket Assembly							
External Structures	None							
Receptacles	N/A							
Valves	Vent & Drain Fittings							
Sampling Ports	Instrument Port Available during Canister Reflooding, Outer Closure Plate Test Port							
Means of Passive Heat Dissipation	Conduction, Convection, and Radiation							
Volume of Coolant	N/A							
Type of Coolant	N/A							
Outer Protrusions	None							
Inner Protrusions	Vent & Drain Port Bodies and Drain Tube							
Lifting Devices	Separate Lifting Fixture							
Impact Limiters	N/A							

Table 1.2-1 - Principal Characteristics of the FuelSolutions™ W21 Canister (2 pages)

Characteristic	W21M				W21T			
	LD(1)	LS(1)	SD(1)	SS(1)	LL(1)	LS(1)	SL(1)	SS(1)
Amount of Shielding: Radial	5/8-inch thick Stainless Steel							
Bottom End(3)	2.13-in. DU 2.75-in. SS	5.75-in. CS 2.75-in. SS	1.63-in. DU 2.75-in. SS 1.88-in. CS	5.75-in. CS 2.75-in. SS	3.13-in. Pb 2.00-in. SS	5.75-in. CS 2.75-in. SS	3.13-in. Pb 2.75-in. SS	5.75-in. CS 2.75-in. SS
Top End(3)	2.13-in. DU 4.75-in. SS	7.25-in. CS 3.00-in. SS	1.25-in. DU 6.75-in. SS	7.25-in. CS 3.00-in. SS	3.38-in. Pb 4.75-in. SS	7.25-in. CS 3.00-in. SS	3.75-in. Pb 4.75-in. SS	7.25-in. CS 3.00-in. SS
Pressure Relief Systems	None							
Closures	Welded Inner and Outer Top and Inner Bottom Closure Plates							
Means of Confinement	All Welded Construction with No Penetrations or Mechanical Seals							
Model Number-Cavity Designator	W21M-LD	W21M-LS	W21M-SD	W21M-SS	W21T-LL	W21T-LS	W21T-SL	W21T-SS
Description of How Individual Casks Will Be Identified	Individually Stamped (see Section 9.1.7.2)							

Table 1.2-1 Notes:

(1) LD - Long, Depleted Uranium; LS - Long, Steel; LL - Long, Lead; SD - Short, Depleted Uranium; SS - Short, Steel; SL - Short, Lead.

(2) Structural confinement materials only.

(3) DU - Depleted Uranium; SS - Stainless Steel; CS - Carbon Steel; Pb - Lead.

Table 1.2-2 - Matrix of FuelSolutions™ W21 Canister Configurations

	W21M[1]				W21T[1]			
Canister Configuration	**LD[2]**	**LS[2]**	**SD[2]**	**SS[2]**	**LL[2]**	**LS[2]**	**SL[2]**	**SS[2]**
Overall Length, inch (max.)	192.3	192.3	182.3	182.3	192.3	192.3	182.3	182.3
Outside Diameter, inch	66.0	66.0	66.0	66.0	66.0	66.0	66.0	66.0
Shell Thickness, inch	0.63	0.63	0.63	0.63	0.63	0.63	0.63	0.63
Basket								
Basket Length, inch	179.5	172.5	166.9	162.5	178.0	172.5	166.9	162.5
Number of Spacer Plates	38	38	36	36	43	43	41	41
CS Spacer Plate Thickness, inch	0.75	0.75	0.75	0.75	0.75	0.75	0.75	0.75
SS Spacer Plate Thickness, inch	2.00	2.00	2.00	2.00	2.00	2.00	2.00	2.00
Borated Neutron Absorber Panel Thickness, inch	0.075	0.075	0.075	0.075	0.075	0.075	0.075	0.075
Top Closure								
Shield Plug Top Plate Thickness, inch	0.12	N/A	0.12	N/A	0.12	N/A	0.12	N/A
Shield Plug Thickness, inch	2.13	7.25	1.25	7.25	3.38	7.25	3.75	7.25
Shield Plug Material	DU	Carbon Steel	DU	Carbon Steel	Lead	Carbon Steel	Lead	Carbon Steel
Shield Plug Bottom Plate Thickness, inch	1.63	N/A	3.63	N/A	1.63	N/A	1.63	N/A
Inner Closure Plate Thickness, inch	1.00	1.00	1.00	1.00	1.00	1.00	1.00	1.00
Outer Closure Plate Thickness, inch	2.00	2.00	2.00	2.00	2.00	2.00	2.00	2.00
Bottom Closure								
End Plate Thickness, inch	1.75	1.75	1.75	1.75	1.00	1.75	1.75	1.75
Shield Plug Thickness, inch	2.13	5.75	1.63/1.88	5.75	3.13	5.75	3.13	5.75
Shield Plug Material	DU	Carbon Steel	DU/CS	Carbon Steel	Lead	Carbon Steel	Lead	Carbon Steel
Closure Plate Thickness, inch	1.00	1.00	1.00	1.00	1.00	1.00	1.00	1.00
Cavity Length, inch (min.)	180.0	173.0	167.5	163.0	178.5	173.0	167.4	163.0
Available Thermal Gap, inch (min. cavity)	0.50	0.49	0.59	0.49	0.50	0.49	0.45	0.49

Notes:
(1) All dimensions are nominal, unless noted otherwise.
(2) LD - Long, Depleted Uranium; LS - Long, Steel; LL - Long, Lead; SD - Short, Depleted Uranium; SS - Short, Steel; SL - Short, Lead

Table 1.2-3 - FuelSolutions™ W21 Canister Fuel Assembly Accommodation

Fuel Assembly Class[1]	Irradiated Length (in)	Width (in)	Weight[2] (lb.)	Canister Type[3]		Fuel Spacer/ Type[4]	Irradiated Length (in)	Width (in)	Weight[2] (lb.)	Canister Type[3]		Fuel Spacer/ Type[4]
				Class M	Class T					Class M	Class T	
PWR Fuel Classes												
	Fuel without Control Components						**Fuel with Control Components**					
B&W 15x15	167.4	8.54	1515	SD	SL	No	173.5	8.54	1680	LS	LS	No
B&W 17x17	167.4	8.54	1505	SD	SL	No	173.5	8.54	1654	LS	LS	No
CE 14x14	158.8	8.11	1292	SS	SS	No	169.6	8.11	1369	LS	LS	No
CE 16x16	178.6	8.10	1430	LD	LL	No	-	-	-	-	-	-
CE System 80	180.0	8.10	1430	LD	LD	No	-	-	-	-	-	-
WE 14x14	162.8	7.76	1302	SS	SS	No	166.3	7.76	1432	SD	SL	No
WE 15x15	162.7	8.44	1472	SS	SS	No	166.9	8.44	1637	SD	SL	No
WE 17x17	163.0	8.44	1482	SS	SS	No	168.9	8.44	1662	LS	LS	No
Fort Calhoun	150.3	8.10	1220	SS	SS	II	158.5	8.10	1287	SS	SS	No
Palisades[5]	150.6	8.25	1360	SS	SS	II	-	-	-	-	-	-
St. Lucie 2	159.7	8.10	1300	SS	SS	No	170.6	8.10	1366	LS	LS	No
Yankee Rowe	112.9	7.62	797	SS	SS	I	-	-	-	-	-	-

Notes:

(1) The fuel assembly types accommodated within each fuel assembly class are defined in Section 2.2.

(2) The fuel assembly weights shown are nominal values. Actual fuel weight is acceptable provided the weight of the fuel assembly and fuel spacer, if required, meets the payload weight limit.

(3) Canister type definitions are provided in Table 1.2-2.

(4) Fuel assembly spacer type definitions are provided in Section 1.2.1.3.

(5) Also includes fuel assemblies with neutron source assembly inserts.

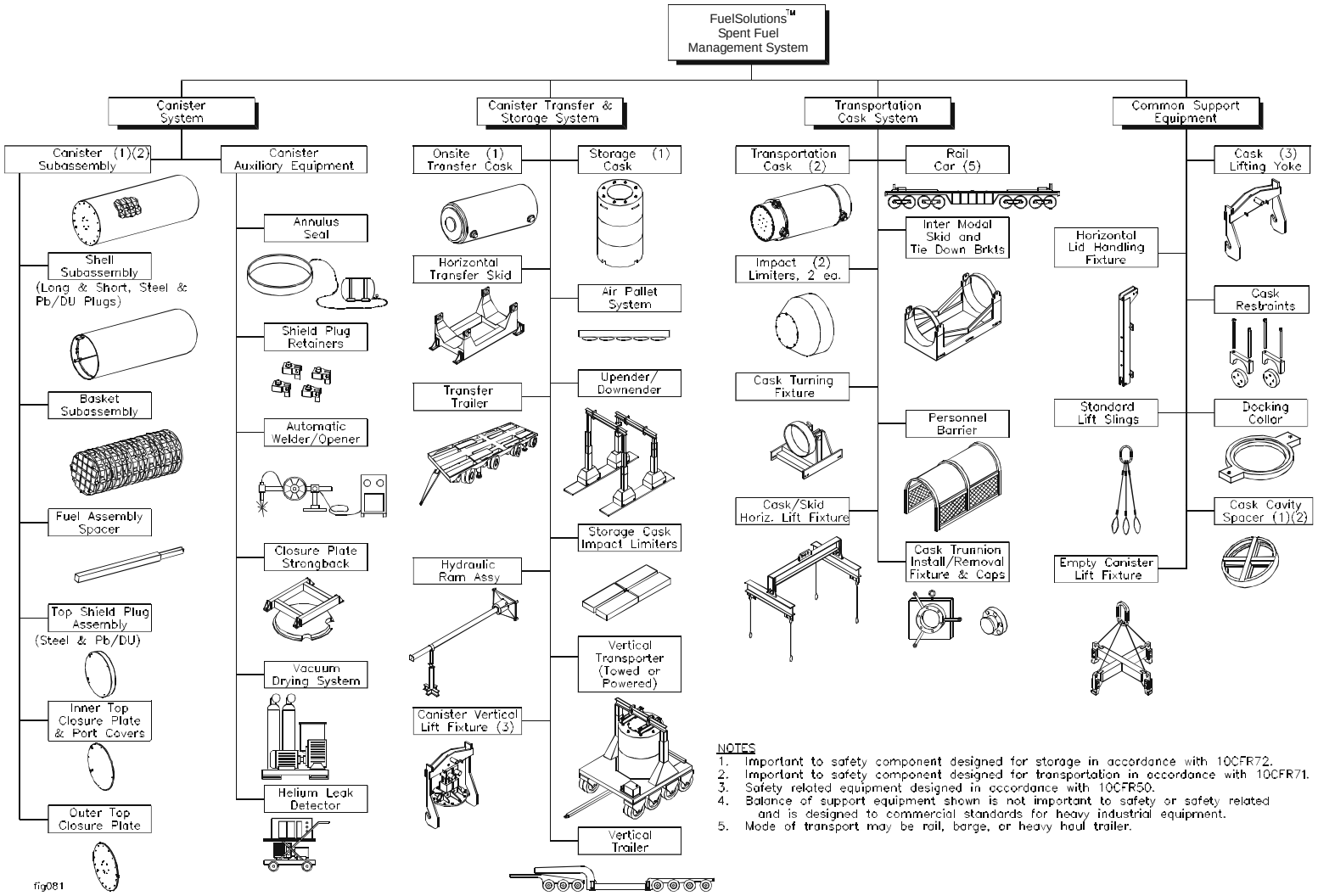

Figure 1.2-1 - FuelSolutions™ Spent Fuel Management System

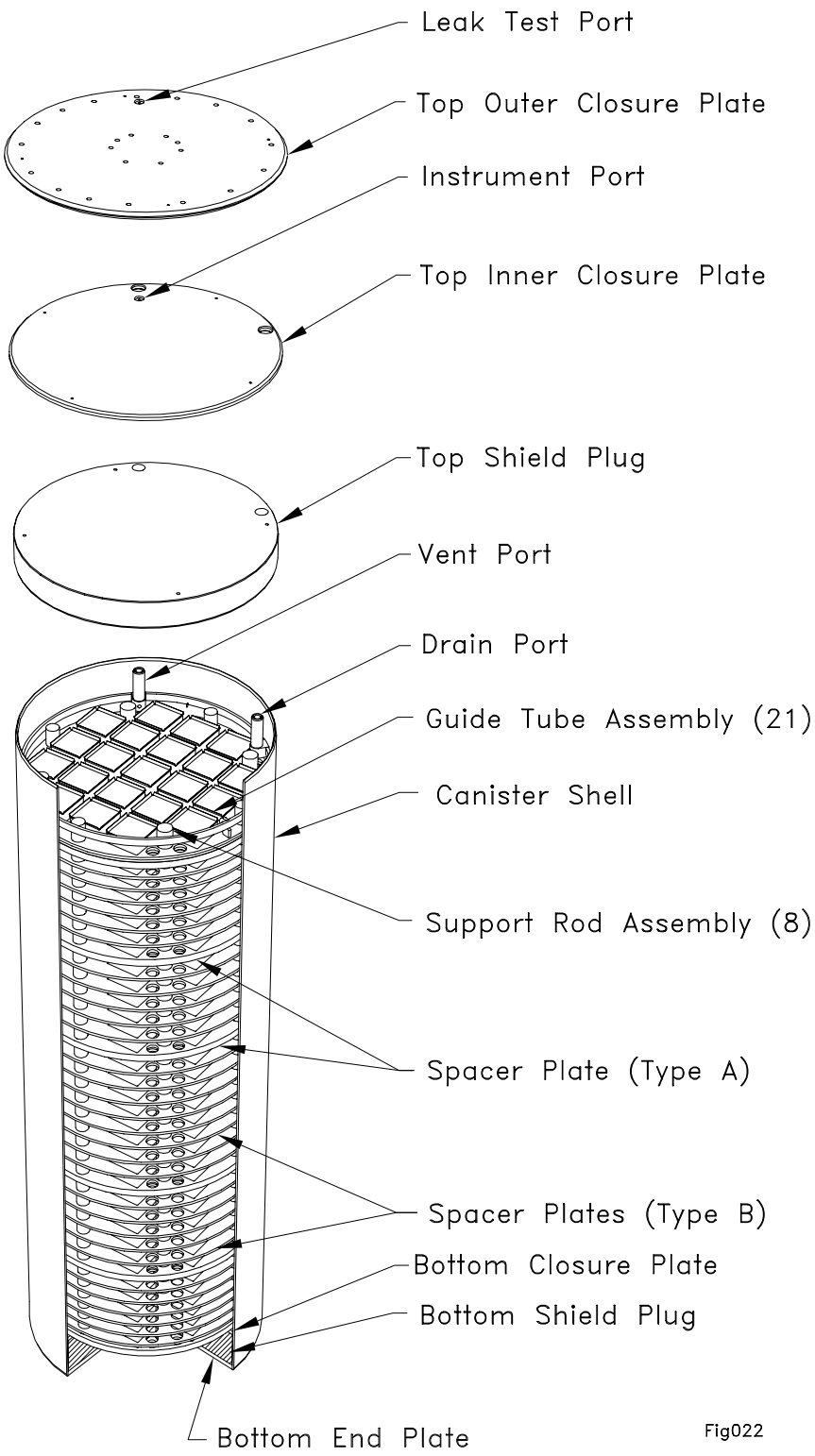

Figure 1.2-2 - FuelSolutions™ W21 Canister

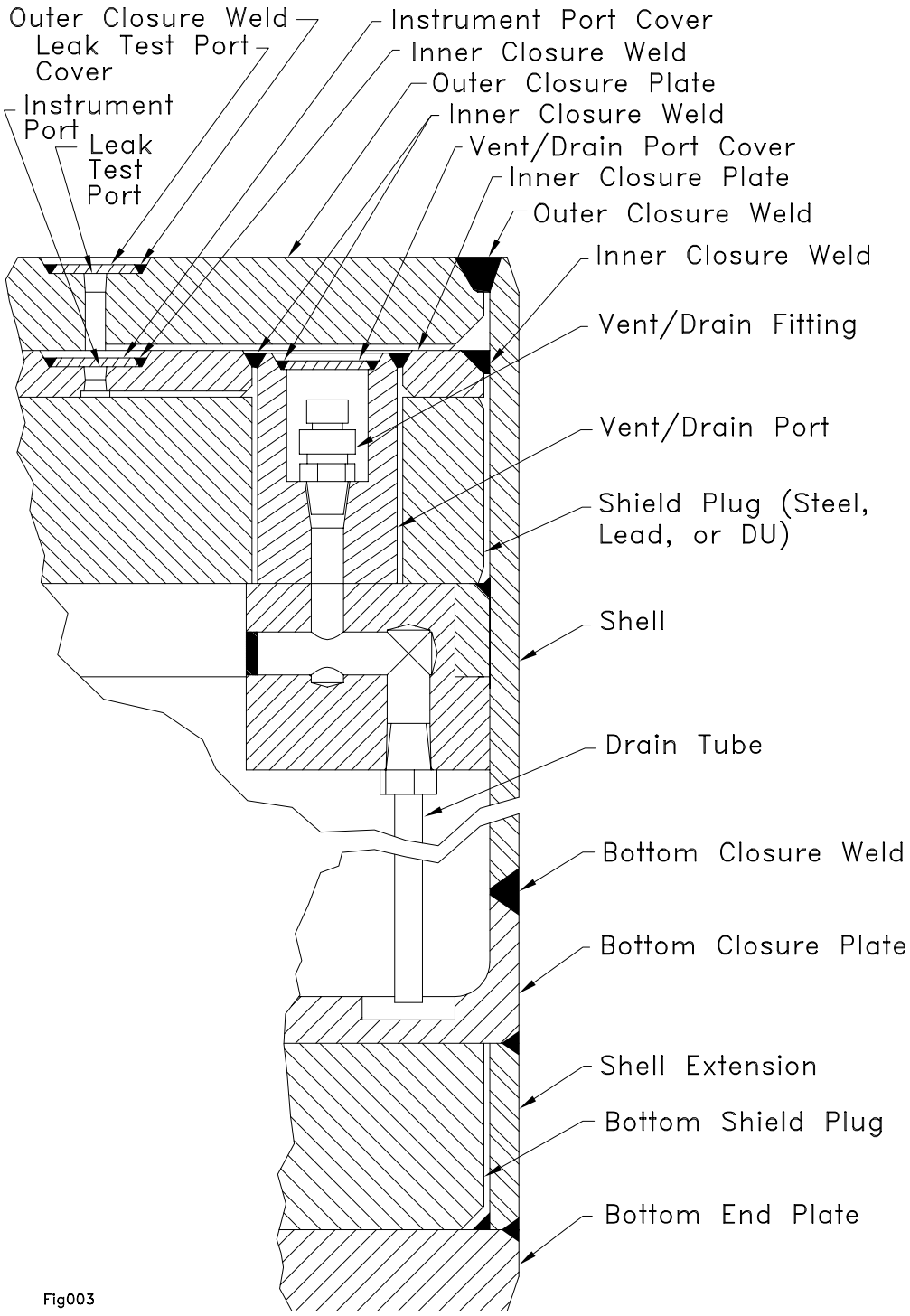

Figure 1.2-3 - FuelSolutions™ W21 Canister Top and Bottom Closure

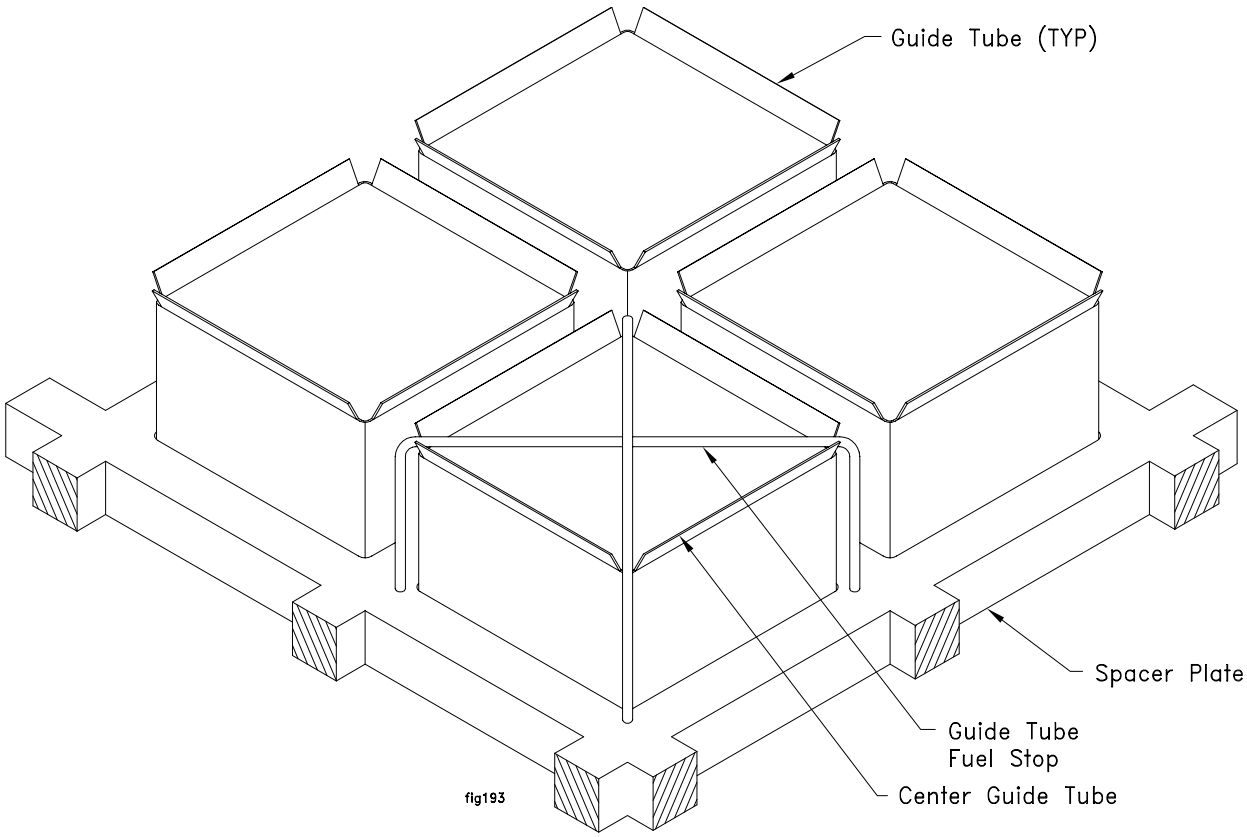

Figure 1.2-4 - FuelSolutions™ W21 Canister Basket Center Guide Tube Fuel Stop Arrangement for Partial Loading Configuration

This page intentionally left blank.

1.3 Identification of Agents and Contractors

BNG Fuel Solutions (BFS) is the prime contractor for design, fabrication, construction, assembly, testing, and operations of the FuelSolutions™ Storage System components. BFS is technically qualified and suitably experienced to conduct these activities and to be the 10CFR72, Subpart L, certificate holder for the FuelSolutions™ SFMS. A description of BFS' related capabilities and experience is provided in Section 1.3 of the FuelSolutions™ Storage System FSAR.

This page intentionally left blank.

1.4 On-Site Storage Array Configurations

Typical FuelSolutions™ Storage System ISFSI pad layouts are presented in Section 1.4 of the FuelSolutions™ Storage System FSAR.

This page intentionally left blank.

1.5 Supplemental Data

1.5.1 Drawings

General arrangement drawings of the FuelSolutions™ W21 canister are provided in this section. The drawings for the FuelSolutions™ W21M and W21T class canisters include the following:

Title	Number	Revision
FuelSolutions™ W21 Canister Field Assembly	W21-110	4
FuelSolutions™ W21 Canister Basket Assembly	W21-120	5
FuelSolutions™ W21 Canister Spacer Plate	W21-121	5
FuelSolutions™ W21 Canister Basket Guide Tube Assembly	W21-122	3
FuelSolutions™ W21 Canister Shell Assembly	W21-130	4
FuelSolutions™ W21 Canister Shield Plug Support Vent/Drain Body & Top	W21-131	3
FuelSolutions™ W21 Canister Shield Plug Assembly	W21-140	5
FuelSolutions™ W21 Canister Closure Plates and Vent/Drain Port Cover	W21-150	4
FuelSolutions™ W21 Canister Fuel Spacer Assembly	W21-190	4

This page intentionally left blank.

Figure Withheld Under 10 CFR 2.390

UNLESS OTHERWISE SPECIFIED
INTERPRET DWG PER ANSI Y14.5M-1994
DIMENSIONS IN INCHES BASED ON 68 °F

TOLERANCES			
2 PL DEC	3 PL DEC	ANGLES	FINISH
± XXX	± XXX	± XXX	XXX

THIRD ANGLE PROJECTION

BNFL Fuel Solutions

TITLE
FuelSolutions™ W21 CANISTER FIELD ASSEMBLY

SIZE	DWG NO	REV
D	W21-110	4

SCALE	NTS	FILE NO.	CMPC.1201.110	SHEET	1 OF 9

Figure Withheld Under 10 CFR 2.390

BNFL Fuel Solutions	SIZE D		DWG NO W21-110	REV 4	
	SCALE NTS	FILE NO.	CMPC.1201.110	SHEET 2 OF 9	

Figure Withheld Under 10 CFR 2.390

BNFL Fuel Solutions	SIZE D		DWG NO W21-110		REV 4
	SCALE NTS	FILE NO. CMPC.1201.110	SHEET 3 OF 9		

Figure Withheld Under 10 CFR 2.390

BNFL Fuel Solutions	SIZE D		DWG NO W21-110		REV 4
	SCALE NTS	FILE NO.	CMPC.1201.110	SHEET 4 OF 9	

Figure Withheld Under 10 CFR 2.390

BNFL Fuel Solutions	SIZE D		DRG NO W21-110	REV 4			
	SCALE NTS	FILE NO.	CMPC.1201.110	SHEET 5 OF 9			

Figure Withheld Under 10 CFR 2.390

BNFL Fuel Solutions	SIZE D		DWG NO W21-110	REV 4				
	SCALE NTS	FILE NO.	CMPC.1201.110	SHEET 6 OF 9				

Figure Withheld Under 10 CFR 2.390

BNFL Fuel Solutions	SIZE D		DWG NO W21-110	REV 4
	SCALE NTS	FILE NO.	CMPC.1201.110	SHEET 7 OF 9

Figure Withheld Under 10 CFR 2.390

BNFL Fuel Solutions	SIZE D		DWG NO W21-110	REV 4			
	SCALE NTS	FILE NO. CMPC.1201.110	SHEET 8 OF 9				

Figure Withheld Under 10 CFR 2.390

BNFL Fuel Solutions	SIZE D		DWG NO W21-110		REV 4
	SCALE NTS	FILE NO.	CMPC.1201.110	SHEET 9 OF 9	

REV	DESCRIPTION	DATE	APPROVED
0	INITIAL ISSUE	3-4-98	R.D. QUINN

Figure Withheld Under 10 CFR 2.390

DIMENSIONS IN INCHES BASED ON 68 °F

TOLERANCES			
2 PL DEC	3 PL DEC	ANGLES	FINISH
± XXX	± XXX	± XXX	XXX

THIRD ANGLE PROJECTION

BNFL Fuel Solutions

TITLE: FuelSolutions™ W21 CANISTER BASKET ASSEMBLY (GENERAL)

SIZE	DWG NO	REV
D	W21-120	5

SCALE NTS | FILE NO. CMPC.1201.120 | SHEET 1 OF 10

Figure Withheld Under 10 CFR 2.390

BNFL Fuel Solutions	SIZE D		DWG NO W21-120		REV 5
	SCALE NTS	FILE NO. CMPC.1201.120	SHEET 2 OF 10		

Figure Withheld Under 10 CFR 2.390

BNFL Fuel Solutions

D		W21-120	5
SCALE NTS	FILE NO. CMPC.1201.120	SHEET 3 OF 10	

Figure Withheld Under 10 CFR 2.390

BNFL Fuel Solutions	SIZE D		DWG NO W21-120		REV 5
	SCALE NTS	FILE NO.	CMPC.1201.120	SHEET 4 OF 10	

Figure Withheld Under 10 CFR 2.390

BNFL Fuel Solutions	SIZE D		DWG NO W21-120	REV 5
	SCALE NTS	FILE NO. CMPC.1201.120	SHEET 5 OF 10	

Figure Withheld Under 10 CFR 2.390

BNFL Fuel Solutions

D		W21-120	5	
SCALE NTS	FILE NO. CMPC.1201.120	SHEET 6 OF 10		

Figure Withheld Under 10 CFR 2.390

Figure Withheld Under 10 CFR 2.390

BNFL Fuel Solutions	SIZE D		DWG NO W21-120	REV 5
	SCALE NTS	FILE NO. CMPC.1201.120	SHEET 8 OF 10	

Figure Withheld Under 10 CFR 2.390

BNFL Fuel Solutions	SIZE D		DWG NO W21-120	REV 5		
	SCALE NTS	FILE NO.	CMPC.1201.120	SHEET 9 OF 10		

Figure Withheld Under 10 CFR 2.390

BNFL Fuel Solutions

SIZE	DWG NO	REV
D	W21-120	5

SCALE NTS FILE NO. CMPC.1201.120 SHEET 10 OF 10

REV	DESCRIPTION	DATE	APPROVED
0	INITIAL ISSUE	2-27-98	R.D. QUINN

Figure Withheld Under 10 CFR 2.390

ASSEMBLY & QUANTITY	LIST OF MATERIAL	CAT

UNLESS OTHERWISE SPECIFIED
INTERPRET DWG PER ANSI Y14.5M-1994
DIMENSIONS IN INCHES BASED ON 68 °F

TOLERANCES			
PL DEC	3 PL DEC	ANGLES	FINISH
± XXX	± XXX	± XXX	XXX

THIRD ANGLE PROJECTION

BNFL Fuel Solutions

TITLE: FuelSolutions™ W21 CANISTER SPACER PLATE

SIZE	DWG NO	REV
D	W21-121	5

SCALE	NTS	FILE NO.	CMPC.1201.121	SHEET	1 OF 1

DWG NO	W21-122		
REV	DESCRIPTION	DATE	APPROVED
0	INITIAL ISSUE	2-27-98	R.D. QUINN

Figure Withheld Under 10 CFR 2.390

UNLESS OTHERWISE SPECIFIED

INTERPRET DWG PER ANSI Y14.5M-1994

DIMENSIONS IN INCHES BASED ON 68 °F

TOLERANCES			
FL DEC	3 PL DEC	ANGLES	FINISH
± XXX	± XXX	± XXX	XXX

THIRD ANGLE PROJECTION

BNFL Fuel Solutions

TITLE: FuelSolutions™ W21 CANISTER BASKET GUIDE TUBE ASSEMBLY

SIZE	DWG NO	REV
D	W21-122	3

SCALE NTS | FILE NO. CMPC.1201.122 | SHEET 1 OF 2

Figure Withheld Under 10 CFR 2.390

BNFL Fuel Solutions

SIZE	DWG NO	REV
D	W21-122	3

SCALE NTS | FILE NO. CMPC.1201.122 | SHEET 2 OF 2

W21-130

REV	DESCRIPTION	DATE	APPROVED
0	INITIAL ISSUE	2-27-98	R.D. QUINN
1	RAI INCORPORATION	3-26-99	R.D. QUINN
		3-23-00	R.D. QUINN

Figure Withheld Under 10 CFR 2.390

ASSEMBLY # [illegible]

UNLESS OTHERWISE SPECIFIED

INTERPRET DWG PER ANSI Y14.5M-1994

DIMENSIONS IN INCHES BASED ON 68 °F

TOLERANCES

2 PL DEC	3 PL DEC	ANGLES	FINISH
± .XX	± .XXX	± .XXX	.XXX

THIRD ANGLE PROJECTION

BNFL Fuel Solutions

TITLE: FuelSolutions™ W21 CANISTER SHELL ASSEMBLY

SIZE	DWG NO	REV
D	W21-130	4

SCALE NTS | FILE NO. CMPC.1201.130 | SHEET 1 OF 9

Figure Withheld Under 10 CFR 2.390

BNFL Fuel Solutions	SIZE D	DWG NO W21-130	REV 4
	SCALE NTS	FILE NO. CMPC.1201.130	SHEET 2 OF 9

Figure Withheld Under 10 CFR 2.390

BNFL Fuel Solutions	SIZE D		DWG NO W21-130	REV 4			
	SCALE NTS	FILE NO.	CMPC.1201.130	SHEET 3 OF 9			

Figure Withheld Under 10 CFR 2.390

BNFL Fuel Solutions

SIZE		DWG NO	REV
D		W21-130	4
SCALE NTS	FILE NO. CMPC.1201.130	SHEET 4 OF 9	

Figure Withheld Under 10 CFR 2.390

BNFL Fuel Solutions	SIZE D		DWG NO W21-130	REV 4			
	SCALE NTS	FILE NO. CMPC.1201.130	SHEET 5 OF 9				

Figure Withheld Under 10 CFR 2.390

BNFL Fuel Solutions	SIZE D		DWG NO W21-130	REV 4			
	SCALE NTS	FILE NO.	CMPC.1201.130	SHEET 6 OF 9			

Figure Withheld Under 10 CFR 2.390

BNFL Fuel Solutions	SIZE D	DWG NO W21-130	REV 4
	SCALE NTS	FILE NO. CMPC.1201.130	SHEET 7 OF 9

Figure Withheld Under 10 CFR 2.390

BNFL Fuel Solutions	SIZE D		DWG NO W21-130	REV 4				
	SCALE NTS	FILE NO.	CMPC.1201.130	SHEET 8 OF 9				

Figure Withheld Under 10 CFR 2.390

BNFL Fuel Solutions

D		W21-130		4
SCALE NTS	FILE NO.	CMPC.1201.130	SHEET	9 OF 9

Figure Withheld Under 10 CFR 2.390

INTERPRET DWG PER ANSI Y14.5M-1994

DIMENSIONS IN INCHES BASED ON 68 °F

TOLERANCES			
2 PL DEC	3 PL DEC	ANGLES	FINISH
± .XXX	± .XXX	± .XXX	.XXX

THIRD ANGLE PROJECTION

BNFL Fuel Solutions

TITLE
FuelSolutions™ W21 CANISTER
SHIELD PLUG SUPPORT
VENT/DRAIN BODY & TOP

SIZE	DWG NO	REV
D	W21-131	3

SCALE	NTS	FILE NO.	CMPC.1201.131	SHEET	1 OF 2

Figure Withheld Under 10 CFR 2.390

BNFL Fuel Solutions	SIZE D		DWG NO W21-131	REV 3			
	SCALE NTS	FILE NO.	CMPC.1201.131	SHEET 2 OF 2			

Figure Withheld Under 10 CFR 2.390

UNLESS OTHERWISE SPECIFIED
INTERPRET DWG PER ANSI Y14.5M-1994
DIMENSIONS IN INCHES BASED ON 68 °F

TOLERANCES			
2 PL DEC	3 PL DEC	ANGLES	FINISH
± .XX	± .XXX	± .XXX	.XXX

THIRD ANGLE PROJECTION

BNFL Fuel Solutions

TITLE
FuelSolutions™ W21 CANISTER
SHIELD PLUG ASSEMBLY

SIZE	DWG NO	REV
D	W21-140	5

SCALE	FILE NO.	SHEET
NTS	CMPC.1201.140	1 OF 4

Figure Withheld Under 10 CFR 2.390

BNFL Fuel Solutions	SIZE D		DWG NO W21-140	REV 5	
	SCALE NTS	FILE NO.	CMPC.1201.140	SHEET 2 OF 4	

Figure Withheld Under 10 CFR 2.390

BNFL Fuel Solutions

SIZE	DWG NO	REV
D	W21-140	5

SCALE NTS | FILE NO. CMPC.1201.140 | SHEET 3 OF 4

Figure Withheld Under 10 CFR 2.390

BNFL Fuel Solutions	SIZE D		DWG NO W21-140	REV 5			
	SCALE NTS	FILE NO.	CMPC.1201.140	SHEET 4 OF 4			

Figure Withheld Under 10 CFR 2.390

UNLESS OTHERWISE SPECIFIED
INTERPRET DWG PER ANSI Y14.5M-1994
DIMENSIONS IN INCHES BASED ON 68 °F

TOLERANCES			
2 PL DEC	3 PL DEC	ANGLES	FINISH
± .XX	± .XX	± .XX	.XX

THIRD ANGLE PROJECTION

BNFL Fuel Solutions

TITLE: FuelSolutions™ W21 CANISTER TOP CLOSURE PLATES AND PORT COVER

SIZE	DWG NO	REV
D	W21-150	4

SCALE	NTS	FILE NO.	CMPC.1201.150	SHEET	1 OF 2

Figure Withheld Under 10 CFR 2.390

BNFL Fuel Solutions	SIZE D		DWG NO W21-150	REV 4
	SCALE NTS	FILE NO.	CMPC.1201.150	SHEET 2 OF 2

W21-190 | SHEET 1 | 4

REV	DESCRIPTION	DATE	APPROVED

Figure Withheld Under 10 CFR 2.390

TOLERANCES			
FL DEC	3 PL DEC	ANGLES	FINISH
± XXX	± XXX	± XXX	XXX

THIRD ANGLE PROJECTION

DNFL Fuel Solutions

TITLE: FuelSolutions™ W21 CANISTER FUEL SPACER ASSEMBLY

SIZE	DWG NO	REV
D	W21-190	4

SCALE NTS | FILE NO. CMPC.1201.190 | SHEET 1 OF 1

1.5.2 Product Literature

Literature describing special materials used for the FuelSolutions™ W21 canister are provided in this section.

1.5.2.1 BORAL® Literature

Literature describing the BORAL® neutron absorbing materials used for the FuelSolutions™ W21 canister basket assembly is provided in this section (pages 1-6, 7.0-7.4, and 8).

This page intentionally left blank.

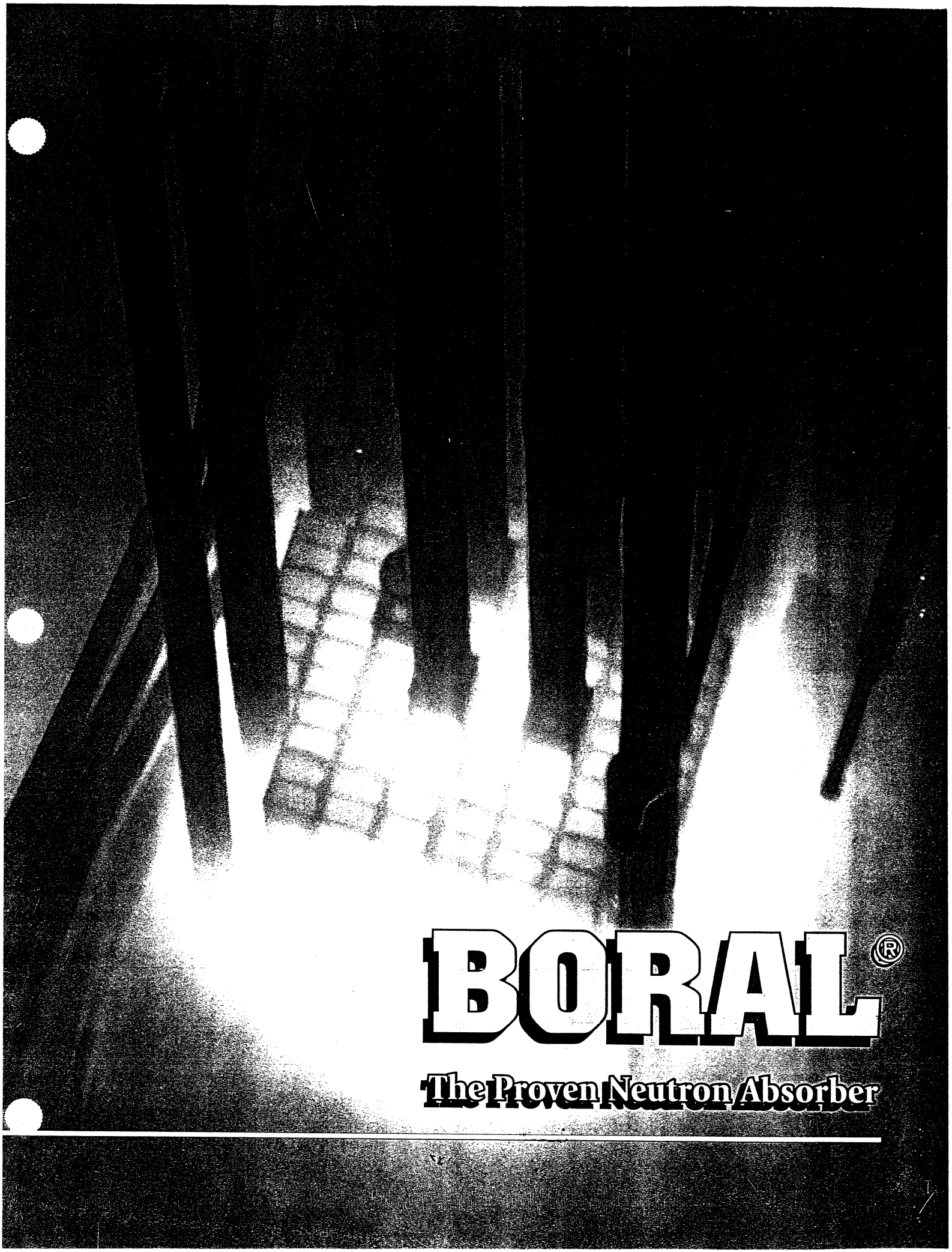
BORAL®
The Proven Neutron Absorber

DESCRIPTION

Boral® is a precision-hot-rolled, composite plate material consisting of a core of mixed aluminum and boron carbide particles with aluminum cladding on both sides. Figure 1 shows the arrangement of the core and the cladding in a cross-section view of a typical Boral® panel. The layers of cladding are solid, Type 1100 aluminum, and the aluminum and boron-carbide that make up the central core are combined in finely-divided powder form before hot rolling.

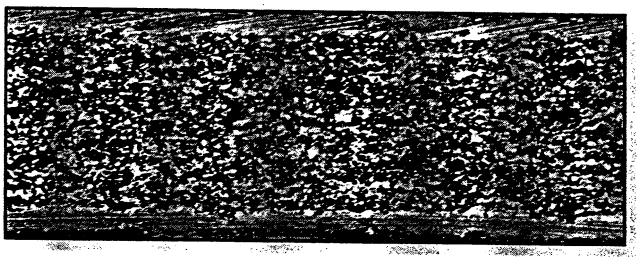

Figure 1: Boral® cross section

A very strong absorber of thermal neutrons, Boral® demonstrates performance approaching that of an ideal shield, as the comparative attenuation graph in Figure 2 illustrates.

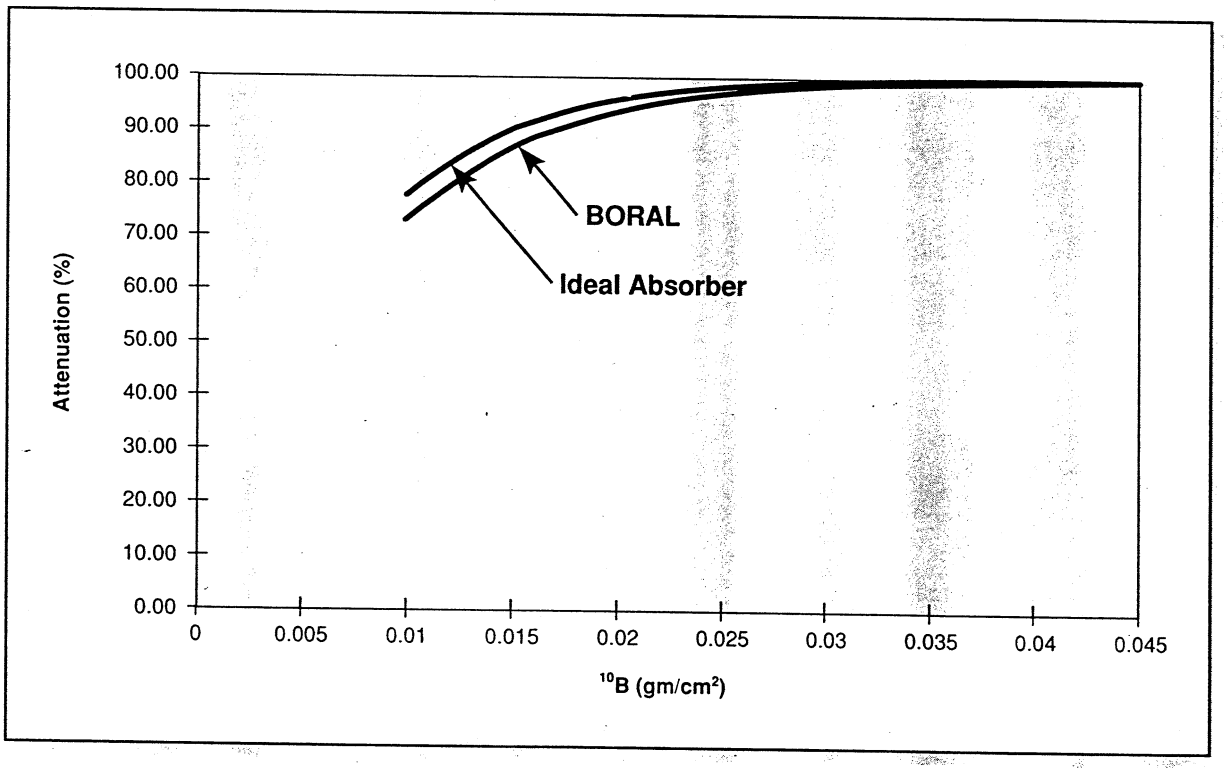

Figure 2: Attenuation as a function of Boron-10 areal density

The graph shows a range of Boron 10 (^{10}B) content (areal density) at and above the values typically used in spent fuel storage and transportation (0.010 to 0.030 gm/sq cm). This exceptional neutronic performance is obtained from a material with a long history of outstanding service in a variety of uses: a material that can confidently be expected to accomplish its intended purpose for very long periods.

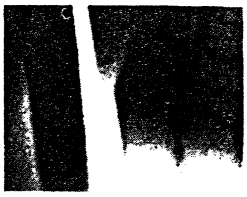

PERFORMANCE

Dozens of facilities utilizing Boral® as a neutron absorber have been licensed by the Nuclear Regulatory Commission, and the material has also seen wide use overseas. With a history of outstanding performance that dates back more than three decades, Boral® has been used in a variety of applications. The earliest uses, beginning in the late 1950s, were in research reactors. Boral® was the material of choice for items such as control blades, beam-port shutters, thermal column liners, and other neutron-absorbing components. The choices were wise ones, for the original Boral® still does the job. As the reactor managers say:

- *"After 31 years' service, the original Boral® safety rods are still performing well. They look fine."* (Washington State University Reactor);
- the 31-year-old Boral® blades *"...are doing fine, with no indication of deterioration."* (University of Wisconsin); and
- with regard to 28-year-old control blades, the Boral® *"...has performed well, with no evidence of swelling, cracking, or other degradation observed during brief annual inspections. The worth has not changed."*(Rhode Island Research Reactor).

The experience in research reactors is directly applicable to the use of Boral® in today's spent fuel pool applications. Research reactor control rods or blades operate in very high radiation fields in water whose temperature is typically in the range from 100 °F to 120 °F, or in an environment essentially identical to that in spent fuel pools. Consequently, many years of proof testing in actual operating facilities ensures many years of exceptional performance by Boral® in today's fuel-storage applications.

Boral® has been specified as the neutron poison material in spent fuel storage racks for nearly thirty years. It is important to note that Boral® has the longest continuous, in-pool service of any thermal neutron absorber. With its wide acceptance as the premier material, and the consequent broad base of use, it is not surprising that different designs for incorporating Boral® in the racks have been utilized. The experience with the different approaches has added significantly to the knowledge of the material: coupled with a substantial base of research and development activity, the experience with different designs has made it possible to set forth guidelines for the proper application of Boral® that ensure long periods of outstanding service.

The Nuclear Industry will continue to rely on Boral's® long history of exceptional performance in severe environments as it moves from temporary spent fuel pool storage to transportation and permanent storage. AAR Advanced Structures will substantiate this confidence by continuous product improvement and innovative design solutions to ensure that the Nuclear Industry is provided many more years of superior performance.

PRODUCTION

Boral® is produced by AAR under a computer-aided Quality Assurance/Quality Control program in conformance with the requirements of 10CFR50, Appendix B.

The manufacturing process consists of several sequential steps. The first is the mixing of the aluminum and boron-carbide powders that will form the core of the finished material, with the amount of each powder a function of the desired ^{10}B areal density. The methods used to control the weight and blend the powders are patented and proprietary processes of AAR.

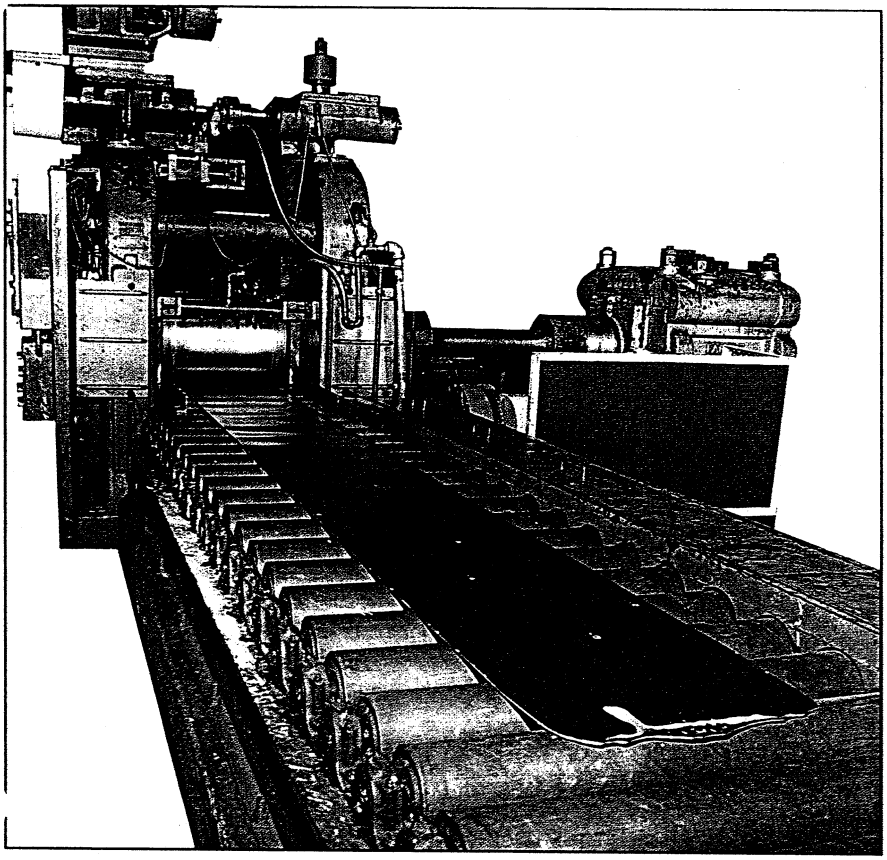

Figure 3 - Boral® rolling operation

After mixing, the powder is placed in aluminum boxes to form the ingots for rolling into the Boral® plate. The boxes are fabricated of the Type 1100 aluminum that forms the cladding of the finished material. The fabricated ingot boxes can vary in size from 12 to 15 inches on a side, with walls, top, and bottom approximately one inch thick. The ingot box is welded closed. The design and construction of the ingots are, like the powder-mixing methods, controlled by AAR patents. The ingot is placed in a furnace adjacent to the rolling mill, where it is heated to an appropriate temperature.

Following several hours of heating in the furnace, the ingot is ready to be rolled; this is accomplished in multiple passes through a bi-directional, precision rolling mill. A photo of the rolling process is given as Figure 3. Following rolling, the sheet of Boral® is trimmed and die cut to the panel sizes required for the finished product.

Sections of each sheet are retained for testing and record purposes. The minimum ^{10}B content per unit area and the uniformity of dispersion within a panel are verified by wet chemical analysis and/or neutron attenuation testing. The acceptance standards are controlled by statistical data to assure the minimum requirements are achieved with a 95/95 confidence level. The maximum variations in the manufacturing processes (statistical tolerance interval) over a significantly large sample size have been determined and are utilized in the establishment of acceptance criteria. All material certifications, lot control records, and test records are maintained to assure material traceability.

PROPERTIES

Boral® is produced over a wide range of areal densities and thicknesses. The thickness of the finished product is a function of the desired areal density, the cladding thickness, and the weight percent of boron carbide in the core. An example of a typical relationship between areal density and thickness is given in Figure 4.

As the figure shows, areal densities specified for present fuel racks — a range of about 0.020 to 0.030 gm/sq cm — are easily obtained in very thin sections.

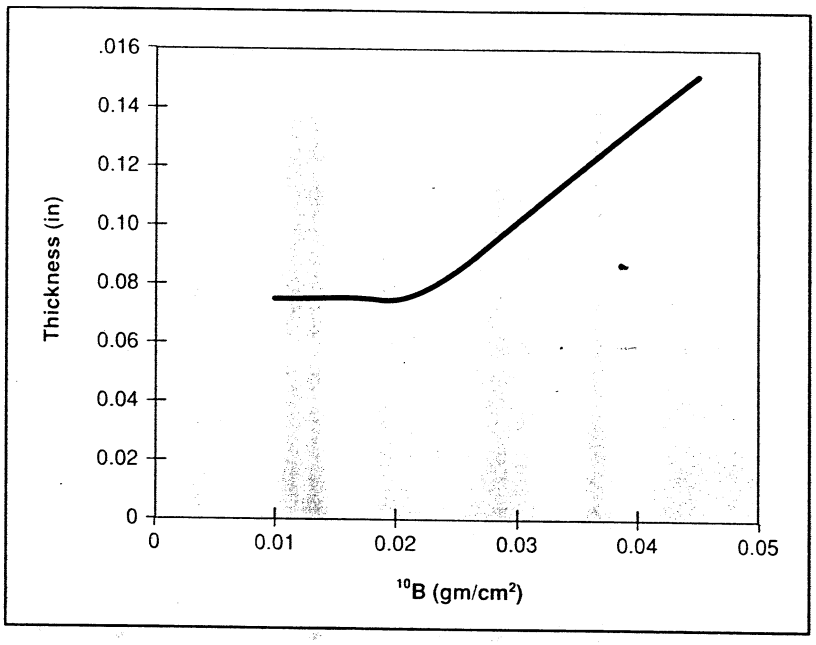

Figure 4: Thickness as a function of Boron-10 areal density

Radiation Resistance/Neutron Absorption

Decades of experience with the original Boral® in research reactors clearly shows the material's capability to perform its intended function for very long periods in extremely high gamma radiation fields. There has been no structural degradation, and the worth of the Boral® control rods has not changed.

High-Temperature Capability

When heated in furnaces at temperatures up to 950 °F, Boral® shows no measurable change in size, weight, density, hardness, or flexibility. The strength properties decrease at temperatures greater than 900 °F.

Corrosion Resistance

The general corrosion behavior of Boral® does not differ appreciably from that of Type 1100 aluminum, which shows excellent corrosion resistance in the environments encountered in fuel storage applications. When exposed to water, aluminum reacts to form an impervious, tightly-adhering layer of hydrated aluminum oxide, which protects the surface from further attack. Galvanic corrosion (with the couple formed by the aluminum of the Boral® and the stainless steel structural material) is not a problem, for stainless steel is compatible with aluminum in all but severe marine or high-chloride environmental conditions. Pitting of aluminum can occur in areas where the material is in contact with stainless steel, particularly if pockets or crevices out of the main fluid stream permit the build-up of dissolved salts, metal ions, oxygen, or other gases. Such pitting or crevice corrosion is avoided by proper application of the Boral® — in this case, by utilizing the vented concept and its provisions for pool water flow past the Boral® panels.

Physical Properties

Boral® can be cut, sawed, bored, welded, and hammered. Many of its physical properties are dependent upon the features of the specific design of the material, but some properties are generally applicable.

USERS OF BORAL®

Boral® has been employed in a variety of applications worldwide for many years. The following is a list of some of the facilities and organizations that use Boral®. No attempt was made to include *every* user, particularly those early users whose facilities are no longer in operation.

Research and Test Reactors
AE-6 (USAEC)
BORAX-5 (USAEC)
Brookhaven Medical Research Reactor
JEN-1 (Spain)
Philippine Research-1
Rhode Island Reactor
Triga Mark II (Italy, Austria, etc.)
University of Kansas Reactor
University of Wisconsin Reactor
Venezuela-1
Washington State University Reactor

Boiling Water Plants (U.S.)
Browns Ferry
Brunswick
Clinton
Cooper
Dresden
Duane Arnold
FitzPatrick
Hatch
Hope Creek
Humboldt Bay
LaCrosse
LaSalle
Limerick
Monticello
Peach Bottom
Perry
Pilgrim
Shoreham
Susquehanna
Vermont Yankee

Pressurized Water Plants (U.S.)
Beaver Valley
Bellefont
Braidwood
Byron
D. C. Cook
Ft. Calhoun
Indian Point
Maine Yankee
Salem
Seabrook
Sequoyah
Three Mile Island
Yankee Rowe
Zion

Foreign Plants
Beznau (Switzerland)
Chinshan (Taiwan)
France (12 PWRs)
Goesgen (Switzerland)
Koeberg (South Africa)
Kuosheng (Taiwan)
Laguna Verde (Mexico)

Shipping Casks
Atomic Energy of Canada Limited
British Nuclear Fuels Limited
ENSA (Spain)
Others in the U.S.

CONCLUSIONS

Boral® is an established, proven material with a long production and utilization background. It is uniquely suited to many nuclear applications, including the storage and shipment of nuclear fuel, and it has seen widespread service in these uses. This service, coupled with the large body of test data developed through the years, makes possible the specification of design and fabrication guidelines that ensure a long lifetime for Boral® in any facility.

Boral® can confidently be expected to perform its intended function in spent fuel storage pools for at least the forty to fifty years projected for pool lifetimes.

Standard Specification for
BORAL® COMPOSITE SHEET

Boral® (*Boral ® is a registered trademark of AAR Advanced Structures*) is a clad composite of aluminum and boron carbide. The Boral® sheet consists of three distinct layers. The outer layers of cladding are solid, Type 1100 alloy aluminum. The central layer consists of a uniform aggregate of fine boron carbide particles held within an aluminum alloy matrix. The boron carbide particles in the central layer average 85 microns in diameter. The average spacial separation is 1.25 to 1.50 particle diameters. The overall thickness of Boral® will vary with Boron 10 (^{10}B) content, cladding thickness and weight percent of boron carbide in the core.

1. Scope

1.1 This specification covers Boral® composite aluminum and boron carbide sheet or panel. This specification establishes the standard for the manufacture, quality assurance, certification, documentation, marking, packaging and preparation for shipment of Boral® sheet and plate.

2. Applicable Documents

2.1 The following documents of the issue in effect on the date of material purchase, unless otherwise noted, form a part of this specification to the extent referenced herein:

2.1.1 *ASTM Standards:*

B 209 Standards Specification for Aluminum Alloy Sheet & Plate

B 221 Standard Specification for Aluminum Alloy Extruded Bars, Rods, Wire, Shapes & Tubes.

B 557M Methods of Tension Testing Wrought and Cast Aluminum and Magnesium-Alloy Products

B 666M Practice for Identification Marking of Aluminum Products

C 750 Standard Specification for Nuclear Grade Boron Carbide Powder.

2.1.2 *AAR Advanced Structures:*

Nuclear Quality Assurance Program Manual

Nuclear Procedure Manual

BP 7001 QAP Receiving Inspection Procedure

BP 7002 QAP Supplier Software Quality Verification

BP 9025 QAP Cleaning Procedure for Boral® Strips

BP 10001 QAP Inspection Instructions for Boron Carbide

BP 10012 QAP Boral® In-process & Final Inspection

BP 10068 QAP Inspection Instructions for Aluminum Powders

BP 11002 QAP Chemical Test of Boral® to Verify GMS Loading of either B_4C, ^{10}B, or Boron

BP 11004 QAP Neutron Attenuation Measurement Procedure

BP 11021 QAP Corrosion Resistance

BP 13003 QAP Packaging Procedure for Boral® Sheet & Plate

3. Terminology

3.1 Definitions

3.1.1 Boral® - A patented product of AAR Advanced Structures comprised of an aluminum and boron carbide sintered core sandwiched between Type 1100 aluminum alloy sheets.

3.1.2 Sheet - A rolled product rectangular in cross section and form with thicknesses through 6.30 mm (0.25 in.) with sheared edges.

3.1.3 Plate - A rolled product rectangular in cross section and form over 6.30 mm in thickness with sheared edges.

3.1.4 Parent Plate - A sheet or a plate that has been processed to a final configuration as a single unit and subsequently cut into two or more smaller sheets or plates to provide the required width or length or both.

3.1.5 Producer - The primary manufacturer of the material, AAR Advanced Structures (formerly Brooks and Perkins).

3.1.6 Statistical Significance - A sampling plan according to BP 11002 QAP that establishes a conclusion with 95% probability at the 95% confidence level.

3.1.7 Supplier - Includes only the category of jobbers and distributors as distinct from producers.

3.2 Description of Term Specific to This Standard:

3.2.1 Capable of - The term "capable of" as used in this specification means that the test need not be performed by the producer of the material. However, should testing by the purchaser establish that the material does not meet these requirements, the material shall be subject to rejection.

4. Ordering Information

4.1 Orders for material under this specification shall include the following:

4.1.1 This specification,

4.1.2 Quantity in pieces,

4.1.3 Dimensions (thickness, width, and length),

4.1.4 Whether certification for tensile properties is required (Section 8),

4.1.5 Whether cladding thickness certification is required (Section 9),

4.1.6 Whether environmental resistance testing is required (Section 12),

4.1.7 Whether inspection or witness of inspection and tests by the purchaser's representative is required prior to material shipment (Section 13),

4.1.8 Whether marking for identification is required (Section 16),

4.1.9 Certification and documentation requirements (Section 17),

4.1.10 Neutron Shielding Specification expressed as the units of the ^{10}B isotope in grams per unit surface area in centimeters,

4.1.11 Whether the provisions of 10CFR21 apply, and

4.1.12 Shipping and billing customer address.

5. Responsibility for Quality Assurance

5.1 Responsibility For Inspection and Tests - Unless otherwise specified in the contract or purchase order, the producer is responsible for the performance of all inspection and test requirements specified herein. The producer may use his own or any other suitable facilities for the performance of the inspection

and test requirements specified herein unless disapproved by the purchaser in the order or at the time of contract signing. The purchaser shall have the right to perform any of the inspections and tests set forth in this specification where such inspections are deemed necessary to assure that material conforms to prescribed requirements.

5.2 Lot Definition - An inspection lot shall be defined as follows:

5.2.1 For Raw Materials - A lot shall comprise all material that is assigned a singular raw material producer's lot number.

5.2.2 For Semifinished Material - A lot shall include all semifinished units that result from a single batch of the process.

5.2.3 For Finished Sheet or Plate - Each sheet or plate shall have a unique lot assignment.

6. General Quality

6.1 All provisions of 10CFR50 Appendix B apply to work performed under this specification.

6.2 Visual Examination - Each finished Boral® sheet or plate shall be visually inspected for damage and surface cracks. Edges shall be inspected for the presence of a full core according to BP 10012 QAP.

6.3 The material shall be supplied in the mill finish and shall be uniform as defined by the requirements of this specification and shall be commercially sound.

6.4 If necessary, boron carbide embedded in the exterior surface of the sheet or plate will be removed from the surface by hand polishing. The surface of each panel may show evidence of such removal.

6.5 The aluminum cladding shall be intact and there will be no exposed core.

6.6 Each plate shall be examined to determine conformance to this specification with respect to general quality and identification marking.

6.7 Retain Samples - Samples from each Boral® production run shall be retained by the producer for a period of one year. After the retain period, samples will either be forwarded to the customer if requested or disposed of by the producer.

7. Chemical Composition

7.1 Cladding Material and Aluminum Powder - The producer will verify that the supplier has provided a Certified Material Test Report (CMTR) for each lot of raw material. The producer will perform any additional tests necessary to assure material conformance to all requirements. Cladding of the Boral® shall conform to Type 1100 series aluminum for chemistry in accordance with ASTM B209 or ASTM B221.

7.2 Boron Carbide - The producer will verify that the supplier has provided a certificate of compliance for each lot of raw material. The producer will perform any additional tests necessary to assure material conformance to all requirements per BP 10001 QAP. Boron carbide contained in the core of the Boral® shall conform to ASTM C750 Type 3 with exceptions.

7.3 Boron 10 (^{10}B) Content - Neutron Shielding Performance - shielding suitability of the Boral® sheet or plate may be determined by either a chemical analysis or by neutron attenuation tests at the option of AAR Advanced Structures according to BP 10002 QAP or BP 11004 QAP. Testing shall be performed using a statistically significant sampling plan.

7.4 Limits - The sheet and plate shall conform to the chemical composition limits specified in Table 1. Conformance shall be determined by the producer through supplier certification, material certification review, analysis of samples taken at the time ingots are fabricated, and analysis of samples taken from finished or semifinished product.

7.5 Number of Samples - The number of samples taken for determination of chemical composition shall be as follows:

7.5.1 When samples are taken at the time the ingots are fabricated, at least one sample shall be taken for each group of ingots fabricated from the same source of prepared mixture.

7.5.2 When samples are taken from the finished or semifinished product, a sample shall be taken to establish a statistically significant conclusion according to BP 10012 QAP.

7.6 Methods of Sampling - Samples for determination of chemical composition shall be taken in accordance with one of the following methods:

7.6.1 Samples for chemical analysis shall be taken by removing representative pieces to obtain a prepared sample according to BP 11002.

7.6.2 Sampling for neutron attenuation shall be obtained according to BP 11004.

8. Tensile Properties of Material as Supplied

8.1 Limits - If required by contract, the Boral® sheet or plate shall conform to the requirements for tensile properties as specified in Table 2.

8.2 Number of Samples - One sample shall be taken from each 2000 kg of sheet or plate produced for the order.

8.3 Test Specimens - Geometry of test specimens and the location in the product from which they are taken shall be as specified in Methods B 557M.

8.4 Test Methods - The tension test shall be made in accordance with Methods B 557M.

9. Cladding

9.1 When the thickness of the cladding is to be determined on finished material, the producer will select a statistically significant number of finished plates for cladding thickness measurements. The plates shall be mounted to expose a transverse cross section and polished for examination with a metallurgical microscope. Using a minimum 10x magnification, the cladding thickness shall be measured in each of five fields equally spaced apart along both sides of the cross section. The average of the ten thickness measurements on each side (a sample lot of 20 readings) is the average cladding thickness, and shall be not less than the nominal thickness specified in Table 3 plus 3 times the standard deviation of readings for the sample lot.

10. Dimensional Tolerances

10.1 Each Boral® sheet or plate shall be inspected for conformance to the customer's contract requirements. Reference BP 10012 QAP.

10.2 Thickness - The thickness of flat sheet and plate shall not vary from that specified by more than the respective permissible variations prescribed in Table 4A.

10.3 Length - The length of flat sheet and plate shall not vary from that specified by more than the respective permissible variations prescribed in Table 4B.

10.4 Width - The width of flat sheet and plate shall not vary from that specified by more than the respective permissible variations prescribed in Table 4C.

10.5 Lateral Bow and Squareness - The sheet or plate shall fit within an area formed by constructing a window of dimensions equal to the maximum length plus 0.125 in. by a width equal to the maximum width plus 0.0625 in.

10.6 Flatness - Each sheet should lay flat within one half of the nominal thickness. Five pounds of pressure may be exerted to achieve flatness provided that when five pounds is placed at any one point the tolerance is not simultaneously exceeded at any other point.

10.7 Where tolerances are not covered by this standard, the permissible variations shall be the subject of agreement between the purchaser and the producer at the time the order is placed.

11. Neutron Absorption Testing

11.1 Neutron Attenuation Examination - If required by the customer, the following additional testing will be performed: Neutron attenuation examination per BP 11004 QAP. A nominal one square inch test area will be subjected to a neutron beam at 0.06 electron - volts.

12. Environment Resistance

12.1 If required by the customer, the producer will perform verification tests that demonstrate Boral's® resistance to the customer's planned usage environment.

12.2 Raw Material Environmental Resistance - If specified, tests will be performed according to BP 10001 QAP and BP 10068 QAP on each lot of raw material to confirm acceptable performance under the customer's environment.

12.3 Sheet or Plate Corrosion Resistance - If specified, tests will be performed according to BP 11021 QAP on samples from each 2000 kg of finished product to confirm acceptable performance under the customer's environment.

12.4 Environmental Profile Resistance - If specified, tests will be performed according to procedures written by the producer specifically designed to demonstrate acceptable performance under the customer's environment.

13. Source Inspection

13.1 If the purchaser desires that his representative inspect or witness the inspection and testing of the material prior to shipment, such agreement shall be made by the purchaser and producer as part of the purchase contract.

13.2 When such inspection or witness of inspection and testing is agreed upon, the producer shall afford the purchaser's representative all reasonable facilities to satisfy him that the material meets the requirements of this specification. Inspection and tests shall be conducted so there is no unnecessary interference with the producer's operations.

14. Retest and Rejection

14.1 If any material fails to conform to all of the applicable requirements of this specification, it shall be cause for rejection of the inspection lot.

14.2 When there is evidence that a failed specimen was not representative of the inspection lot and when no other sampling plan is provided or approved by the purchaser through the contract or purchase order, at least two additional specimens shall be selected to replace each test specimen that failed. All specimens so selected for retest shall meet the requirements of the specification or the lot shall be subject to rejection.

14.3 Material in which defects are discovered subsequent to inspection may be rejected.

14.4 If material is rejected by the purchaser, the producer or supplier is responsible only for replacement of the material to the purchaser. All rejected material shall be returned to the producer or supplier by the purchaser.

15. Identification Marking of Product

15.1 Marking - A unique serial number will be marked on each sheet or plate by a removable label or with low chloride marking ink.

15.2 When specified on the purchase order or contract, all sheet and plate shall be marked in accordance with Practice B 666M except that this specification number shall be used.

16. Packaging and Package Marking

16.1 Packaging - The Boral® plates will be packaged in accordance with BP 13003 QAP.

16.2 Trade Mark and Identification - The trademark and manufacturer's identification shall be shown on a decal attached to the shipping container.

16.3 The material shall be packaged to provide adequate protection during normal handling and transportation and each package shall contain only one size of material unless otherwise agreed. The type of packaging and gross mass of containers shall, unless otherwise agreed, be at the producer's or supplier's discretion, provided that they are such as to ensure acceptance by common or other carriers for safe transportation at the lowest rate to the delivery point.

16.4 Each shipping container shall be marked with the purchase order number, material size, specification number, gross and net masses, and the producer's name or trademark.

16.5 When specified in the contract or purchase order, material shall be preserved, packaged, and packed in accordance with the requirements of MIL-STD-649. The applicable levels shall be as specified in the contract or order. Marking for shipment of such material shall be in accordance with Fed. Std. No. 123 for civil agencies and MIL-STD-129 for military agencies.

17. Certification

17.1 Documentation shall be issued to the purchaser to certify that the material supplied has been inspected and tested and has been found to meet the requirements specified herein, including any additional testing that has been mutually agreed upon and so stated in the purchase order.

17.2 The following Quality Assurance documents shall be submitted as a minimum for each shipment:

a) Certification of Compliance
b) Inspection Record
c) Boral® Test Report
d) Boron Carbide Material Certification
e) Non-Conformance Reports, if Applicable

TABLE 1 BORAL® - CHEMICAL COMPOSITION OF A STANDARD PLATE

Aluminum	69%	nominal
Boron	24%	nominal*
Carbon	6%	nominal*
Iron	0.5%	maximum
Silicon	0.1%	maximum
Titanium	0.1%	maximum
Copper	0.1%	maximum
Zinc	0.1%	maximum

* These elements are bound beneath the protective aluminum clad and therefore not subject to the ambient environment. Other elements are standard constituents of 1100F aluminum alloy.

TABLE 2 BORAL® - TYPICAL[1] ENGINEERING PROPERTIES

A. STRUCTURAL

1. MODULUS OF ELASTICITY, E (Msi) ASTM E-8	9 Msi
2. TENSILE STRENGTH, S_y (Ksi) ASTM E-8, E-21	10 Ksi
3. MATERIAL DUCTILITY - ELONGATION IN 2" COUPON, % ASTM E-8	0.1%

B. NUCLEAR

1. STRUCTURAL PROPERTIES FOLLOWING IRRADIATION -
In tests performed at the University of Michigan Phoenix Memorial Lab, there were no significant structural properties changes observed in Boral® after exposure to:

Total dose due to gamma alone:	9.0×10^{11} rad
Total equivalent dose due to combined gamma and neutron exposure:	3.4×10^{16} rad
Thermal neutron dose ($W < 0.55$ eV):	2.7×10^{19} n/cm^2
Fast ($W > 1.0$ MeV):	1.08×10^{20} n/cm^2

C. THERMAL

1. MAXIMUM SHORT-TERM TEMPERATURE, WET -	< 212 °F
2. MAXIMUM SHORT-TERM TEMPERATURE, DRY -	< 1,000 °F
3. MAXIMUM LONG-TERM TEMPERATURE, WET -	< 212 °F
4. MAXIMUM LONG-TERM TEMPERATURE, DRY -	< 850 °F

5. AVERAGE AREAL MASS DENSITY

D_t = overall areal mass density	= gm/cm^2
D_a = average areal density for aluminum	= 2.713 (gm/cm^3) x (t_{clad} (cm))
D_c = average areal density for core matrix	= 2.481 (gm/cm^3) x (t_{core} (cm))

$$D_t \text{ (gm/cm}^2) = 2 \times D_a + D_c$$

6. SPECIFIC HEAT

	100 °F	500 °F
C_p = overall specific heat	= W-s/gm-K	
C_{pa} = specific heat of the aluminum	= 0.919 W-s/gm-K	1.12 W-s/gm-K
C_{pc} = specific heat of the core	= 0.936 W-s/gm-K	1.38 W-s/gm-K

$$C_p = (C_{pa} \times 2 \times D_a + C_{pc} \times D_c) / D_t$$

7. THERMAL CONDUCTIVITY

	100 °F	500 °F
k_t = overall thermal conductivity	= W/cm-K	
k_a = thermal conductivity of aluminum	= 1.621 W/cm-K	1.864 W/cm-K
k_c = thermal conductivity of core matrix	= 0.859 W/cm-K	0.768 W/cm-K
x_t = overall thickness		
x_a = thickness of aluminum cladding on each side		
x_c = thickness of the core matrix		

$$k_t = x_t \ / \ ((2 * x_a / k_a) + (x_c / k_c))$$

8. THERMAL EMISSIVITY = e = 0.10 - 0.19
   Ref: Sparrow, E. M., & Cess, R. D. (1966). Radiation Heat Transfer (p. 44). From Brooks/Cole Publishing Company, the extrapolation between rough plate and oxidized.

D. MECHANICAL
   1. COEFFICIENT OF THERMAL EXPANSION = a = 1.97×10^{-5} (in./in. - C)

1. Properties listed are typical for Boral®. Actual property values will vary based on the Boral® design necessary to achieve specific attributes. If a Purchaser requires specific property values, conformance tests should be specified in the contract and performed by the Producer for that property.

TABLE 3 BORAL® - TYPICAL THICKNESS VS ^{10}B CONTENT

Minimum core thickness (in.) = 2.489 x ^{10}B loading (gm/cm^2)
Minimum sheet or plate thickness:

(for $^{10}B \leq .020$):	0.075 in.
(for $.020 < {}^{10}B < .026$):	(3.486 x ^{10}B) in.
(for $^{10}B \geq .026$):	(3.193 x ^{10}B) in.

Core thickness tolerance (in.) = one third of the overall thickness tolerance, and
Cladding thickness tolerance (in.) = two thirds of the overall thickness tolerance,
where the thickness tolerance is defined in Table 4A.

TABLE 4 BORAL® - STANDARD DIMENSIONAL TOLERANCES

A. THICKNESS TOLERANCES

Thickness (in.)	Tolerance (in.)
0.075 - 0.090	±0.005 in.
0.091 - 0.150	±0.006 in.
0.151 - 0.270	±0.008 in.

B. WIDTH TOLERANCES

Width (in.)	Tolerance (in.)	
	Thickness ≤ 0.125 in.	Thickness > 0.125 in.
All widths	±0.062 in.	±0.150 in.

C. LENGTH TOLERANCES

Length (in.)	Tolerance (in.)	
	Thickness ≤ 0.125 in.	Thickness > 0.125 in.
under 144	±0.100 in.	±0.100 in.
144-180	±0.188 in.	±0.220 in.
over 180	±0.220 in.	±0.220 in.

WORLDWIDE BORAL® APPLICATIONS

AAR ADVANCED STRUCTURES

12633 Inkster Road • Livonia, Michigan 48150
Phone: (313) 522-2000 • FAX: (313) 522-2240

1.5.2.2 Electroless Nickel Plating Literature

Reference information describing the electroless nickel plating used for coating the carbon steel piece parts of the FuelSolutions™ W21 canister basket assembly is included in this section (pages 443 - 445).

This page intentionally left blank.

Nonelectrolytic Nickel Plating

*By the ASM Committee on Nickel Plating**

THREE METHODS may be employed for depositing nickel coatings without the use of electric current:

1 Immersion plating
2 Chemical reduction of nickelous oxide at 1600 to 2000 F
3 Autocatalytic chemical reduction of nickel salts by hypophosphite anions in an aqueous bath at 190 to 205 F ("electroless" nickel plating).

All three methods are, under certain limited conditions, useful substitutes for nickel electroplating; they are particularly useful in applications in which electroplating is impracticable or impossible because of cost or technical difficulties. Of the three methods, electroless nickel plating is in widest use, and is the method to which the most attention is devoted in this article.

Immersion Plating

The composition and operating conditions of an aqueous immersion plating bath are as follows:

Nickel chloride ($NiCl_2 \cdot 6H_2O$)	80 oz per gal
Boric acid (H_3BO_3)	4 oz per gal
pH	3.5 to 4.5
Temperature	160 F

When using this bath, it is desirable, but not mandatory, to move the work at a rate of about 16 ft per min.

This solution is capable of depositing a very thin (about 0.025 mil) and uniform coating of nickel on steel in periods of up to 30 min. The coating is porous and possesses only moderate adhesion, but these conditions can be improved by heating the coated part at 1200 F for 45 min in a nonoxidizing atmosphere. (Higher temperatures will promote diffusion of the coating.)

High-Temperature Chemical-Reduction Coating

By the reduction of a mixture of nickelous oxide and dibasic ammonium phosphate in hydrogen or other reducing atmosphere at 1600 to 2000 F, a nickel coating can be deposited without the use of electric current. This method (U. S. Patent 2,633,631) consists of applying a slurry of the two chemicals to all or selected surfaces of the workpiece, drying the slurry in air, and performing the chemical reduction at elevated temperature. No special tanks or other plating facilities are required. Some diffusion of nickel and phosphorus into the basis metal occurs at elevated temperature; when the coating is applied to steel, it will consist of nickel, iron, and about 3% phosphorus. The slurry may be used for brazing.

Electroless Nickel Plating

The electroless nickel plating process employs a chemical reducing agent (sodium hypophosphite) to reduce a nickel salt (such as nickel chloride) in hot aqueous solution and to deposit nickel on a catalytic surface. The deposit obtained from an electroless nickel solution is an alloy containing from 4 to 12% phosphorus and is quite hard. (As indicated later in this article, the hardness of the as-plated deposit can be increased by heat treatment.) Because the deposit is not dependent on current distribution, it is uniform in thickness, regardless of the shape or size of the plated surface.

Electroless nickel deposits may be applied to provide the basis metal with resistance to corrosion or wear, or for the buildup of worn areas. Typical applications of electroless nickel for these purposes are given in Table 1, which also indicates plate thicknesses and postplating heat treatments.

Surface Cleaning. In general, the methods employed for cleaning and preparing metal surfaces for electroless nickel plating are the same as those used for conventional electroplating. Heavy oxides are removed mechanically, and oils and grease are removed by vapor degreasing. A typical precleaning cycle might consist of alkaline cleaning (either agitated soak or anodic) and acid pickling, both followed by water rinsing.

Prior to electroless plating, the surfaces of all stainless steel parts must be chemically activated in order to obtain satisfactory adhesion of the plate. One activating treatment consists of immersing the work for about 3 min in a hot (200 F) solution containing equal volumes of water and concentrated sulfuric acid. Another treatment consists of immersing the work for 2 to 3 min in the following solution at 160 F:

Sulfuric acid (66° Bé)	25% by volume
Hydrochloric acid (18° Bé)	5% by volume
Ferric chloride hexahydrate	0.53 oz per gal

Pretreatments that are unique to electroless nickel plating include:

1 A strike copper plate must be applied to parts made of or containing lead, tin, cadmium or zinc, to insure adequate coverage and to prevent contamination of the electroless solution.
2 Massive parts are preheated to bath temperature to avoid delay in the deposition of nickel from the hot electroless bath.

Bath Characteristics. A simplified equation that describes the formation of electroless nickel deposits is:

$$NiSO_4 + NaH_2PO_2 + H_2O \xrightarrow[\text{catalyst}]{\text{heat}} Ni + NaH_2PO_3 + H_2SO_4$$

The essential requirements for any electroless nickel solution are:

1 A salt to supply the nickel
2 A hypophosphite salt to provide chemical reduction
3 Water
4 A complexing agent
5 A buffer to control pH
6 Heat
7 A catalytic surface to be plated.

Detailed discussions of the chemical characteristics of electroless baths, and of the critical concentration limits of the various reactants, can be found in several of the references listed at the end of this article.

Both alkaline (pH, 7.5 to 10) and acid (pH, 4.5 to 6) electroless nickel baths are used in industrial production. Although the acid baths are easier to maintain and are more widely used, the alkaline baths are reported to have greater compatibility with sensitive substrates (such as magnesium, silicon and aluminum).

Catalysis. Nickel and hypophosphite ions can exist together in a dilute solution without interaction, but will react on a catalytic surface to form a deposit. Furthermore, the surface of the deposit is also catalytic to the reaction, so that the catalytic process continues until any reasonable plate thickness is applied. This autocatalytic effect is the principle upon which all electroless nickel solutions are based.

Metals that catalyze the plating reaction are members of group VIII in the periodic table, which group includes nickel, cobalt and palladium. A deposit will begin to form on surfaces of these metals by simple contact with the solution. Other metals, such as aluminum or low-alloy steel, first form an

* See page 432 for committee list.

Table 1. Typical Applications of Electroless Nickel Plating

Part and basis metal	Typical plate thickness, mils	Postplating heat treatment(a)
Plate Applied for Corrosion Resistance		
Valve body, cast iron	5.0	None
Printing rolls, cast iron	1.0	None
Electronic chassis, 1010 steel	1.0	None
Railroad tank cars, 1020 steel	3.5	1 hr at 1150 F
Reactor vessels, 1020 steel	4.0	1 hr at 1150 F
Pressure vessel, 4130 steel	1.5	3 hr at 350 F
Tubular shaft, 4340 steel	1.5	3 hr at 375 F
Plate Applied for Wear Resistance		
Centrifugal pump, steel	1.0	2 hr at 400 F
Plastic extrusion dies, steel	2.0	2 hr at 375 F
Printing-press bed, steel	1.0	None
Valve inserts, steel	0.5	2 hr at 1150 F
Hydraulic pistons, 4340 steel	1.0	1 hr at 750 F
Screws, 410 stainless	0.2	None
Stator and rotor blades, 410 stainless	0.8 to 1.0	1 hr at 750 F
Spray nozzles, brass	0.5	None
Plate Applied for Buildup of Worn Areas		
Carburized gear (bearing journal)	0.8 to 1.0	5 hr at 275 F
Splined shaft (ID spline), 16-25-6 stainless	0.5	1 hr at 750 F
Connecting arm (dowel-pin holes), type 410	5.0	1 hr at 750 F

(a) Heat treatments above 450 F should be carried out in an inert or reducing atmosphere.

immersion deposit of nickel on their surfaces, which then catalyzes the reaction; still others, such as copper, require a galvanic nickel deposit in order to be plated. Such a galvanic nickel deposit can be formed by the plating solution itself, if the copper is in contact with steel or aluminum.

Plastics, glass, ceramics and other nonmetallics also can be plated, if their surfaces can be made catalytic. This usually is done by the application of traces of a strongly catalytic metal to the nonmetallic surface by chemical or mechanical means.

There is, however, a group of metals that not only do not display any catalytic action, but also interfere with all plating activity. The salts of these metals, if dissolved in a solution even in comparatively small amounts, are poisons and stop the plating reaction on all metals, thus necessitating the discarding of the solution and the formulation of a new one. Examples of these anticatalysts are Pb, Sn, Zn, Cd, Sb, As and Mo.

Paradoxically, the deliberate introduction of extremely minute traces of poisons has been practiced by a number of users of electroless nickel, with the intent of stabilizing the solution. Being an inherently metastable mixture, electroless nickel solutions are likely to decompose spontaneously, with the nickel and hypophosphite reacting on trace amounts of solid impurities present in any plating bath. In order to minimize this problem, a poisoning element is added in trace concentrations of parts per million (or per trillion) to the original make-up of the solution. The poison is adsorbed on the solid impurities in quantities large enough to destroy their catalytic nature. This selective adsorption on catalytic centers decreases the concentration of the catalytic poison to a level below the critical threshold, so that normal deposition of nickel is not impeded, although the rate of deposition is somewhat reduced. The deliberate introduction of catalytic poisons for the purpose of stabilization is covered by several patents, including U. S. Patents 2,762,723 and 2,847,327.

Table 2. Alkaline Electroless Nickel Baths

Constituent or condition	Bath 1	Bath 2	Bath 3
Composition, Grams per Liter			
Nickel chloride	30	45	30
Sodium hypophosphite	10	11	10
Ammonium chloride	50	50	50
Sodium citrate	..	100	..
Ammonium citrate	..	..	65
Ammonium hydroxide	to pH	to pH	to pH
Operating Conditions			
pH	8 to 10	8.5 to 10	8 to 10
Temperature, F	195 to 205	195 to 205	195 to 205
Plating rate (approx), mil per hr	0.3	0.4	0.3

Alkaline Baths. Most alkaline baths in commercial use today are based on the original formulations developed by Brenner and Riddell. They contain a nickel salt, sodium hypophosphite, ammonium hydroxide, and an ammonium salt; they may also contain sodium citrate or ammonium citrate. The ammonium salt serves to complex the nickel and buffer the solution. Ammonium hydroxide is used to maintain the pH between 7.5 and 10. Table 2 gives the compositions and operating conditions of three alkaline electroless baths.

At the operating temperatures of these baths (about 200 F), ammonia losses are considerable. Thorough ventilation and frequent adjustment of pH are required. The alkaline solutions are inherently unstable and are particularly sensitive to the poisoning effects of anticatalysts such as lead, tin, zinc, cadmium, antimony, arsenic and molybdenum — even when these elements are present in only trace quantities. However, when depletion occurs, these solutions undergo a definite color change from blue to green, indicating the need for addition of ammonium hydroxide.

Acid baths are more widely used in commercial installations than alkaline baths. Essentially, acid baths contain a nickel salt, a hypophosphite salt, and a buffer; some solutions also contain a chelating agent. Frequently, wetting agents and stabilizers also are added.

These baths are more stable than alkaline solutions, are easier to control, and usually provide a higher plating rate. Except for the evaporation of water, there is no loss of chemicals when acid baths are heated to their operating range. Table 3 gives the compositions and operating conditions of several acid electroless baths.

Solution Control. In order to assure optimum results and consistent plating rates, the composition of the plating solution should be kept relatively constant; this requires periodic analyses for the determination of pH, nickel content, and phosphite and hypophosphite concentrations. The rate at which these analyses should be made depends on the quantity of work being plated and the volume and type of solution being used. The following methods have been employed:

pH — Standard electrometric method

Nickel — Any one of the colorimetric, gravimetric or volumetric methods is satisfactory; the cyanide method is probably the most popular.

Phosphite — A 10-ml sample of the plating solution is combined with 20 ml of a 5% solution of sodium bicarbonate and cooled in an ice bath. Next, 50 ml of 0.1*N* iodine solution is added and the flask containing this mixture is stoppered and permitted to stand for 2 hr at room temperature. Then the flask is cooled for 15 min in ice water, after which it is unstoppered, the mixture is acidified with acetic acid, and the excess iodine is titrated with 0.1*N* sodium thiosulfate, with starch as an indicator. Determination is then made as follows:

$$NaH_2PO_2 \text{ per liter} = \frac{\text{net ml of } 0.1N \text{ iodine} \times 6.3}{\text{ml of plating solution}}$$

Hypophosphite (U. S. Patent 2,697,651) — A 25-ml sample of the plating solution is diluted to 1 liter. A 5-ml aliquot of the

Table 3. Acid Electroless Nickel Plating Baths(a)

Constituent or condition	Bath 4	Bath 5	Bath 6	Bath 7	Bath 8	Bath 9
Composition, Grams per Liter						
Nickel chloride	30	..	..	30	..	30
Nickel sulfate	..	21	20	..	15	..
Sodium hypophosphite	10	24	27	10	14	12
Sodium acetate	..	..	..	..	13	..
Sodium hydroxyacetate	50	..	..	10	..	..
Sodium succinate	..	..	16	..	..	..
Lactic acid (80%)	..	34 ml	..	..	..	..
Propionic acid (100%)	..	2.2 ml	..	..	..	10
Operating Conditions						
pH	4 to 6	4.3 to 4.6	4.5 to 5.5	4 to 6	5 to 6	4.5 to 5.5
Temperature, F	190 to 210	203	200 to 210	190 to 210	190 to 210	190 to 210
Plating rate (approx), mil per hr	0.5	1.0	1.0	0.4	0.7	0.6

(a) Baths 4 and 7 are covered by U. S. Patent 2,532,283 (a public patent assigned to the National Bureau of Standards); bath 5, by U. S. Patents 2,822,293 and 2,822,294, and bath 6 by U. S. Patents 2,658,841 and 2,658,842.

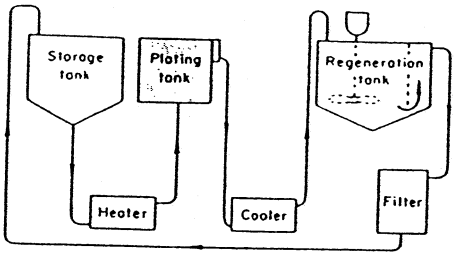

Fig. 1. Schematic of continuous-type system for electroless nickel plating. See text.

dilution is combined with 10 ml of a 10% solution of ammonium molybdate and 10 ml of fresh 6% sulfurous acid. The sample is covered and heated to boiling, and a deep blue color develops. The sample is cooled and diluted to 100 ml, and transmittance at a wave length of 440 microns is determined. The calibration curve on semilog paper is linear.

Hypophosphite (alternative method) — A 5-ml sample of the plating solution is mixed in a beaker with 5 ml of methyl orange solution made up of 1 gram of methyl orange in 1 liter of water. In another beaker is placed 15 ml of an acid solution made up by (*a*) dissolving 40 grams of sodium metabisulfate in 200 ml of water, (*b*) slowly adding the sodium metabisulfate solution to a cold solution of 82 ml of sulfuric acid in 650 ml of water, and then (*c*) diluting this mixture with water to 1 liter. When the acid solution and the solution containing the sample and methyl orange reach a temperature of 77 F in a thermostat, the two solutions are mixed. The time between mixing and the disappearance of the red color is recorded. The hypophosphite concentration is a function of this time and is read from a concentration-time curve made from known standards.

Equipment Requirements. The precleaning and post-treating equipment for an electroless nickel line is comparable to that employed in conventional electrodeposition. The plating tank itself, however, is unique.

The preferred plating tank for batch operations is constructed of stainless steel or aluminum and is lined with a coating of an inert material, such as tetrafluoroethylene or a phenolic-base organic. The size and shape of the tank are usually dictated by the parts to be plated, but the surface area of the plating solution should not be so large that excessive heat loss occurs as a result of evaporation.

A large heat-transfer area and a low temperature gradient are necessary between the heating medium and the plating solution. This combination provides for a reasonable heat-up time without local hot spots that could decompose the solution. It is accepted practice to surround the plating tank with a hot-water jacket or to immerse it in a tank containing hot water. Heating jackets using low-pressure steam also have been used successfully. The use of immersed steam coils is not favored, however, because it entails the sacrifice of a large amount of working area in the tank.

Accessory equipment required or recommended for the tank includes:

1 An accurate temperature controller
2 A filter to remove any suspended solids
3 A pH meter
4 An agitator to prevent gas streaking
5 On small tanks, a cover, to minimize heat loss and exclude foreign particles.
6 On large tanks, a separate small tank to dissolve and filter additives before they are put into the plating tank.

Considerably more equipment is required for a continuous-type system, such as that shown in Fig. 1. The bath is prepared and stored in a separate tank and flows through a heater (which raises its temperature to 205 F) into the plating tank. From the plating tank, the solution is pumped through a cooler, which decreases its temperature to 175 F or below, and then to an agitated regeneration tank, where reagents are added in controlled amounts to restore the solution to its original composition. The solution is then directed past a vertical underflow baffle and out of the regeneration tank to a filter, and then returned to storage.

In externally heated continuous-type systems such as the one shown in Fig. 1, the plating tank and other components of the system that come in contact with the plating solution are constructed of type 304 stainless steel and are not lined or coated; these components are periodically deactivated by chemical treatment. Details of this type of system are covered by several patents, including U. S. Patents 2,941,902; 2,658,839 and 2,874,073.

Properties of the Deposit. Electroless nickel is a hard, lamellar, brittle, uniform deposit. As plated, the hardness

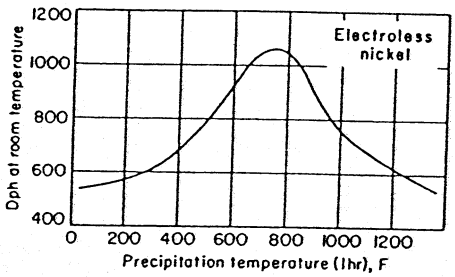

Effect of temperature of 1-hr precipitation heat treatment on room-temperature hardness of a typical electroless nickel deposit (Eberbach tester, 100-gram load). Above 450 F, heat treatment was in an inert atmosphere.

Fig. 2. Heat treatment of coating

varies over a considerable range (425 to 575 dph), depending primarily on phosphorus content, which ranges from 4 to 12%. This hardness can be increased by a precipitation heat treatment. As indicated in Fig. 2, which shows temperature-hardness relationships for a typical deposit, by heating at 750 F for ½ to 1 hr, hardness can be increased to about 1000 dph.

The corrosion resistance of electroless nickel deposits is superior to that of electrodeposited nickel of comparable thickness, but this superiority varies with exposure conditions. Outdoor exposure and salt spray corrosion data indicate that about 25% more resistance is given a steel panel by electroless nickel than by electrolytic.

Table 4. Physical Properties of Electroless Nickel Deposits

Property	Value
Specific gravity	7.8 to 8.5
Melting point	1635 to 1850 F
Electrical resistivity	60 microhm-cm
Thermal expansion	13×10^{-6} per °C
Thermal conductivity	0.0105 to 0.0135 cal/cm sec/°C

Table 5. Costs for Electroless Nickel Plating (Example 2) (a)

Cost factor	Cost per year (b)
Original investment	$18,000
Fixed costs:	
Depreciation (10 years)	$ 1,800
Insurance	450
Floor space (200 sq ft)	192
Repairs and maintenance	450
Variable costs:	
Raw material	6,100
Utilities	740
Labor costs:	
Direct	10,400
Indirect	2,630
Total	$22,762
Total cost per hr	$9.48
Total cost per sq ft coated to 1 mil	$1.00

(a) Exclusive of costs for: overhead and administration; racking, cleaning and unracking; and preplating and postplating processes. (b) Based on deposition of 1 mil on 0.1-sq-ft parts at rate of 0.8 mil per hr (capacity: 117 pieces, or 9.4 sq-ft/mil, per hr), on a schedule of 10 hr per day, 20 days per month, 2400 hr per year.

Some of the physical properties of electroless nickel are listed in Table 4.

Advantages and Limitations. Some advantages of electroless nickel are:

1 Good resistance to corrosion and wear
2 Excellent uniformity
3 Solderability and brazability
4 Good oxidation resistance.

Limitations of electroless nickel are:

1 High cost
2 Brittleness
3 Poor welding characteristics
4 Lead, tin, cadmium and zinc must be copper strike plated before electroless nickel can be applied
5 Slower plating rate (in general), as compared to electrolytic methods
6 Full brightness in deposit cannot be obtained without extreme brittleness.

Cost. Electroless nickel is considerably more expensive than electrodeposited nickel. Actual costs for electroless nickel plating, as reported by two users, are given in the following examples.

Example 1. Based on the experience of one manufacturing plant, it costs $1.20 to deposit an electroless nickel coating 1 mil thick on a square foot of surface area: 37¢ for chemicals, 59¢ for labor, and 24¢ for equipment and maintenance.

Example 2. Another manufacturing plant reports that it costs $1 per sq ft to plate a 1-mil thickness of electroless nickel on specific parts with a surface area of 0.1 sq ft, on the basis of data obtained over a one-year period (2400 working hours). An analysis of their costs is given in Table 5.

Selected References

A. Brenner, Electroless Plating Comes of Age, *Metal Finishing*, November 1954, p 68-76; December 1954, p 61-68

A. Brenner and G. Riddell, Nickel Plating on Steel by Chemical Reduction, *J Res Nat Bur Stds*, July 1946, p 31-34, and *Proc Am Electroplaters' Soc*, 1946, p 23-29; Deposition of Nickel and Cobalt by Chemical Reduction, *J Res Nat Bur Stds*, Nov 1947, p 385-395, and *Proc Am Electroplaters' Soc*, 1948, p 156-169

G. Gutzeit, Industrial Nickel Coating by Chemical Catalytic Reduction, *Trans Inst Metal Finishing*, 33, 383-423 (1955-1956), and *Corrosion Technol*, 3, 208 (1956)

G. Gutzeit, An Outline of the Chemistry Involved in the Process of Catalytic Nickel Deposition from Aqueous Solution, *Plating*, Oct 1959, p 1158-1164; Nov 1959, p 1275-1278; Dec 1959, p 1377-1378; Jan 1960, p 63-70

C. H. de Minjer and A. Brenner, Studies on Electroless Nickel Plating, *Plating*, December 1957, p 1297-1305

Symposium on Electroless Nickel Plating (Catalytic Deposition of Nickel-Phosphorus Alloys by Chemical Reduction in Aqueous Solution), ASTM STP No. 265 (1959)

This page intentionally left blank.

2. PRINCIPAL DESIGN CRITERIA

The FuelSolutions™ Storage System components, including the storage cask and the transfer cask, are designed based on the bounding FuelSolutions™ canister dimensions and weights, and the thermal and radiological source terms, as documented in the FuelSolutions™ Canister Storage FSARs. This chapter defines the design criteria that are specific to the FuelSolutions™ W21 canister design and demonstrates that the FuelSolutions™ W21 canister and its contents are within the design basis parameters used for the FuelSolutions™ W150 Storage Cask and W100 Transfer Cask. The FuelSolutions™ W21 canister design criteria are summarized in Table 2.0-1 and described in the sections that follow.

Table 2.0-1 - W21 Canister Design Criteria Summary (7 Pages)

Type	Criteria	Basis	FSAR Reference
Design Life:			
Design	100 yrs.	-	Section 2.1.2
Regulatory	20 yrs.	10CFR72.42(a) & 10CFR72.236(g)	-
Structural:			
Design & Fabrication Codes:			
Shell Assembly	ASME Code, Section III, Subsections NB and NF	10CFR72.24(c)(4)	Sections 1.2.1.3 & 2.1.2
Basket Assembly	ASME Code, Section III, Subsection NG	10CFR72.24(c)(4)	Sections 1.2.1.3 & 2.1.2
Outer Closure Plate Vertical Lifting Points	ANSI N14.6/NUREG-0612	10CFR72.24(c)(4)	Section 2.1.2
Design Dead Weights:			
Max. Loaded Canister (dry)	80,888 lb.	ANSI/ANS 57.9	Table 3.2-1
Max. Empty Canister (dry)	45,608 lb.	ANSI/ANS 57.9	Table 3.2-1
Design Cavity Pressures:			
Normal:			
Dry Storage	10 psig	ANSI/ANS 57.9	Section 2.3.1.2
Blowdown	30 psig	ANSI/ANS 57.9	Section 2.3.1.2
Off-normal:			
Dry Storage	16 psig	ANSI/ANS 57.9	Section 2.3.2.2
Reflood	100 psig	ANSI/ANS 57.9	Section 2.3.2.4
Postulated Accident	69 psig	ANSI/ANS 57.9	Section 2.3.3.4
Response and Degradation Limits	SNF assemblies confined in dry, inert environment	10CFR72.122(h)(1)	Section 1.2.1.3
Thermal:			
Maximum Design Temperatures:			
Structural Materials:			

Table 2.0-1 - W21 Canister Design Criteria Summary (7 Pages)

Type	Criteria	Basis	FSAR Reference
Carbon Steel	700°F	ASME Code Section II, Part D	Section 4.3.1
Stainless Steel	800°F	ASME Code Section II, Part D	Section 4.3.1
Without Drop Loads	1000°F	ASME Code Section II, Part D	Section 4.3.1
Shielding Materials:			
Lead	620°F	-	Section 4.3.1
Carbon Steel	1000°F	-	Section 4.3.1
Depleted Uranium	2071°F	-	Section 4.3.1
PWR Fuel Cladding:			
> 0 ≤ 60 GWd/MTU	382.3°C	-	Table 4.3-1
Canister Backfill Gas	Helium	-	Section 12.3
Canister Backfill Density	0.0378-0.0385 g-moles/liter	-	Section 12.3
Short-term Allowable Fuel Cladding Temperature			
Normal & Off-normal	400°C	-	Section 2.1.2
Accident	570°C	-	Section 2.1.2
Insolation	Protected by Cask	10CFR71.71	-
Confinement:		10CFR72.128(a)(3) & 10CFR72.236(d) & (e)	
Closure Welds:			
Shell Seams & Bottom Closure Plate	Full Penetration	-	Sections 1.2.1.3 & 7.1
Inner Closure Plate	Multi-pass Partial Penetration	10CFR72.236(e)	Sections 1.2.1.3 & 7.1
Outer Closure Plate	Multi-pass Partial Penetration		
Port Covers	Multi-pass Partial Penetration		
NDE:			
Shell Seams & Bottom Closure Plate	100% RT	-	Sections 1.2.1.3 & 7.1

Table 2.0-1 - W21 Canister Design Criteria Summary (7 Pages)

Type	Criteria	Basis	FSAR Reference
Inner Closure Plate	Root Pass and Final Surface 100% PT	-	Sections 1.2.1.3 & 7.1
Outer Closure Plate	Root, Intermediate, and Final Surface 100% PT	-	Sections 1.2.1.3 & 7.1
Port Covers	Final Surface 100% PT	-	Sections 1.2.1.3 & 7.1
Leak Testing:			
Welds Tested	Shell Seams & Bottom Closure Plate-to-Shell, Inner Closure Plate-to-Shell, Inner Closure Plate-to-Vent & Drain Port Bodies	-	Sections 1.2.1.3 & 7.1
Medium	Helium	-	Sections 1.2.1.3 & 7.1
Max. Leak Rate	8.52×10^{-6} ref-cc/sec	-	Section 12.3 of WSNF-220
Test Pressure	12.5 psig	-	Section 12.3 of WSNF-220
Monitoring System	Concrete Liner Thermocouple and Periodic Surveillance	10CFR72.128(a)(1)	Section 12.3 of WSNF-220
Retrievability:			
Normal and Off-normal	No Encroachment on Fuel Assemblies	10CFR122(f), (h)(1), & (l)	Section 3.1.2.1
Post (design-basis) Accident			
Criticality:		10CFR72.124 & 10CFR.236(c)	
Method of Control	Fixed Borated Neutron Absorber	-	Sections 1.2.1.3 & 2.1.2
Min. Boron Loading	20 mg/cm^2 B_{10}	-	Section 6.3.1
Max. k_{eff}	0.95	-	Section 6.1
Min. Burnup	0.0 GWd/MTU (fresh fuel)	-	Sections 2.1.2 & 6.3.1

Table 2.0-1 - W21 Canister Design Criteria Summary (7 Pages)

Type	Criteria	Basis	FSAR Reference
Radiation Protection/Shielding:		10CFR72.126, & 10CFR72.128(a)(2)	
Confinement Cask: (normal/off-normal/accident)			
Canister Closure	ALARA	10CFR20	Sections 10.1, 10.2, & 10.3
Canister Transfer	ALARA	10CFR20	Sections 10.1, 10.2, & 10.3
Exterior of Shielding: (normal/off-normal/accident)			
Transfer Mode Position	ALARA	10CFR20	Section 5.4.2 of WSNF 200
Storage Mode Position	See FuelSolutions™ Storage System FSAR	10CFR20	Section 5.4.1 of WSNF 200
ISFSI Controlled Area Boundary	See FuelSolutions™ Storage System FSAR	10CFR72.104 & 10CFR72.106	Section 10.4
Design Bases:		10CFR72.236(a)	
Spent Fuel Specification:			
Assemblies/Canister	Up to 21	-	Section 2.2 & Section 12.3
Type of Cladding	Zircaloy*	-	Section 2.2 & Section 12.3
Fuel Condition	Intact*	-	Section 2.2 & Section 12.3
* Also designed to accommodate failed fuel, stainless clad fuel, MOX fuel, and consolidated fuel (Sections 1.2.3 & 2.2) by future amendment.			
Class/Type/Configuration	See Table 2.2-1	-	Section 2.2 &Table 2.2-1
Max. Burnup	60,000 MWd/MTU	-	Section 12.3
Max. Enrichment	4.6 to 5.0 w/o ^{235}U (varies by fuel design)	-	Sections 6.1 & 12.3
Max. Decay Heat/Canister:			
$> 0 \leq 60$ GWd/MTU	25.1 kW (0.184 kW/in)	-	Section 4.1.5 & Table 4.1-4
Max. Fuel Assembly Weights:			
w/o Control Components	1,515 lb.	-	Table 1.2-3
w/ Control Components	1,680 lb.	-	Table 1.2-3

Table 2.0-1 - W21 Canister Design Criteria Summary (7 Pages)

Type	Criteria	Basis	FSAR Reference
Max. Fuel Assembly Irradiated Lengths:			
w/o Control Components	180.0 in.	-	Table 1.2-3
w/ Control Components	173.5 in.	-	Table 1.2-3
Max. Fuel Assembly Irradiated Width	8.54 in.	-	Table 1.2-3
Fuel Rod Fill Gas:			
Pressure (max.)	500 psig	-	Section 4.4.1.6 & Table 4.4-6
Volume (max.)	505 cu. in.	-	Section 4.4.1.6 & Table 4.4-6
Normal Design Event Conditions:		10CFR72.122(b)(1)	
Ambient Outside Temperatures	See FuelSolutions™ Storage System FSAR	ANSI/ANS 57.9	Section 2.3.1.1
Handling Loads:			
Vertical	15% of dead wt.	CMAA #70	Section 2.3.1.4
Horizontal	45,000 lb. push or pull, either end	-	Section 2.3.1.4
Wet/Dry Loading	Wet	-	Section 1.2.2
Transfer Orientation	Vertical or Horizontal	-	Section 1.2.2
Storage Orientation	Vertical	-	Section 1.2.2
Fuel Rod Rupture Releases:			
Fuel Rod Failures	1%	-	Sections 2.3.1.2 & 4.4.1.5
Fill Gases	100%	-	Sections 2.3.1.2 & 4.4.1.5
Fission Gases	30%	-	Sections 2.3.1.2 & 4.4.1.5
Confinement Boundary Leakage	2×10^{-5} atm-cm^3/sec	-	Sections 2.3.1.5 & 7.2
Off-Normal Design Event Conditions:		10CFR72.122(b)(1)	
Ambient Temperature	See FuelSolutions™ Storage System FSAR	ANSI/ANS 57.9	Section 2.3.2.1
Misaligned Cask Horizontal Canister Transfer Load	70,000 lb. push/50,000 lb. pull, either end	-	Section 2.3.2.3
Fuel Rod Rupture Releases:			

Table 2.0-1 - W21 Canister Design Criteria Summary (7 Pages)

Type	Criteria	Basis	FSAR Reference
Fuel Rod Failures	10%	-	Sections 2.3.2.2 & 4.4.1.5
Fill Gases	100%	-	Sections 2.3.2.2 & 4.4.1.5
Fission Gases	30%	-	Sections 2.3.2.2 & 4.4.1.5
Confinement Boundary Leakage	2×10^{-5} atm-cm^3/sec	-	Sections 2.3.2.6 & 7.2
Design-Basis (Postulated) Accident Design Events and Conditions:		10CFR72.24(d)(2) & 10CFR72.94	
Drop/Tip-Over Cases	See FuelSolutions™ Storage System FSAR	-	Section 2.3.3.2
Fire	See FuelSolutions™ Storage System FSAR	10CFR72.122(c)	Section 2.3.3.3
Fuel Rod Rupture Releases:			
Fuel Rod Failures	100%	-	Sections 2.3.3.4 & 4.4.1.5
Fill Gases	100%	-	Sections 2.3.3.4 & 4.4.1.5
Fission Gases	30%	-	Sections 2.3.3.4 & 4.4.1.5
Particulates & Volatiles	See Table 7.4-1 of FuelSolutions™ Storage System FSAR	-	Sections 2.3.3.5 & 7.3.1
Confinement Boundary Leakage	2×10^{-5} atm-cm^3/sec	-	Sections 2.3.3.5 & 7.3
Explosive Overpressure	See FuelSolutions™ Storage System FSAR	10CFR72.122(c)	Section 2.3.3.6
Air Flow Blockage:			
Vent Blockage	See FuelSolutions™ Storage System FSAR	10CFR72.128(a)(4)	Section 2.3.3.1.1
Ambient Temperature	See FuelSolutions™ Storage System FSAR	10CFR72.128(a)(4)	Section 2.3.3.1.1
Design-Basis Natural Phenomenon Design Events and Conditions:		10CFR72.92 & 10CFR72.122(b)(2)	
Flood Water Depth	50 ft.	ANSI/ANS 57.9	Section 2.3.4.1

Table 2.0-1 - W21 Canister Design Criteria Summary (7 Pages)

Type	Criteria	Basis	FSAR Reference
Seismic	See FuelSolutions™ Storage System FSAR	10CFR72.102(f) & RG 1.60	Section 2.3.4.3
Wind	Protected by Casks	ASCE 7	Section 2.3.4.4
Tornado & Missiles	Protected by Casks	RG 1.76 & NUREG-0800	Section 2.3.4.2
Burial Under Debris	Bounded by Air Flow Blockage Criteria	-	Section 2.3.4.5
Lightning	See FuelSolutions™ Storage System FSAR	NFPA 78	Section 2.3.4.6
Snow and Ice	Protected by Casks	ASCE 7	Section 2.3.4.7

2.1 Structures, Systems, and Components Important to Safety

2.1.1 Identification of Items Important to Safety

As identified in Chapter 1 of this FSAR, the FuelSolutions™ W21 canister is a structure, system, and component (SSC) that is classified as important to safety in accordance with 10CFR72. Table 2.1-1 of the FuelSolutions™ Storage System FSAR[1] provides a summary of the FuelSolutions™ Storage System components and support equipment (including the FuelSolutions™ canisters and related equipment) and defines their safety classification.

2.1.2 Design Bases and Criteria

General

Consistent with the findings of the NRC's Waste Confidence Decision Review,[2] the FuelSolutions™ W21 canister is designed for 100 years of service, while satisfying the requirements of 10CFR72. The design considerations that assure canister performance throughout the service life include addressing the following:

- Corrosion
- Structural fatigue effects
- Maintenance of helium atmosphere
- Allowable fuel cladding temperatures
- Neutron absorber boron depletion.

The adequacy of the canister design for the intended service life is discussed in Section 3.4.4 of this FSAR.

Structural

The FuelSolutions™ W21 canister structural components include the internal basket assembly and the shell assembly. The internal basket assembly is designed and fabricated as a core support structure in accordance with the applicable requirements of Section III, Subsection NG[3] of the ASME Code, to the maximum extent practicable, as discussed in Section 2.5.1. The shell assembly is designed and fabricated as a Class 1 component pressure vessel in accordance with Section III, Subsection NB[4] and NF[5] of the ASME Code, to the maximum extent practicable, as

[1] WSNF-220, *FuelSolutions™ Storage System Final Safety Analysis Report*, NRC Docket No. 72-1026, BNG Fuel Solutions.

[2] *Nuclear Regulatory Commission 10 CFR Part 51 Waste Confidence Decision Review*, U.S. Nuclear Regulatory Commission, September 11, 1990.

[3] American Society of Mechanical Engineers (ASME) Boiler and Pressure Vessel Code, Section III, Division 1, Subsection NG, *Core Support Structures*, 1995 Edition.

[4] American Society of Mechanical Engineers (ASME) Boiler and Pressure Vessel Code, Section III, Division 1, Subsection NB, *Class 1 Components*, 1995 Edition.

discussed in Section 2.5.1. The principal exception is the top end inner and outer closure plate welds to the canister shell, as discussed in Section 2.5.2. The top end closure design complies with guidance provided in NRC Interim Staff Guidance #4 (ISG-4).[6] In addition, the top end outer closure plate is designed in accordance with the requirements of ANSI N14.6[7] for critical lifts to facilitate vertical canister transfer.

The canister top end closure plate welds are partial penetration welds that are structurally qualified by analysis, as presented in Chapter 3 of this FSAR. The inner closure plate welds are inspected by performing a liquid penetrant examination of the root pass and final weld surface. The integrity of the top end inner closure plate welds is verified by performing a pneumatic pressure test, and a helium leak test in accordance with the *technical specification* requirements contained in Section 12.3 of the FuelSolutions™ Storage System FSAR. The outer closure plate weld is inspected by performing a liquid penetrant examination of the root pass, intermediate pass, and final weld surface. This weld NDE is in compliance with ISG-4. The associated critical flaw size evaluation to support the NDE acceptance basis is provided in Section 3.9.5 of this FSAR. This critical flaw size evaluation also supports the optional use of UT inspection of the outer closure plate to shell weld.

The structural analysis of the FuelSolutions™ W21 canister, in conjunction with the redundant closures and nondestructive examination, pneumatic pressure testing, and helium leak testing performed during canister fabrication and canister closure, provides assurance of canister closure integrity in lieu of the specific weld joint requirements of Section III, Subsection NB.

Further discussion and justification for the FuelSolutions™ canister closure design and fabrication requirements are provided in Section 2.5.2. Compliance with the ASME Code as it is applied to the design and fabrication of the FuelSolutions™ W21 canister and the associated justification are discussed in Section 2.5.1.

The FuelSolutions™ W21 canister is designed for all normal, off-normal, and postulated accident condition loadings, as defined in Section 2.3. These design loadings include the postulated drop accidents while in the cavity of the FuelSolutions™ W150 Storage Cask or the FuelSolutions™ W100 Transfer Cask, as defined in the FuelSolutions™ Storage System FSAR. The load combinations for which the canister is designed are defined in Section 2.3.5 of this FSAR.

Thermal

As discussed in Section 4.3.2 of this FSAR, the FuelSolutions™ W21 canister allowable fuel cladding temperatures imposed to prevent cladding degradation during long-term dry storage conditions are based on a cladding creep methodology, with strains due to creep not exceeding 1% and remaining below the tertiary creep regime. In addition, allowable fuel cladding

---

[5] American Society of Mechanical Engineers (ASME) Boiler and Pressure Vessel Code, Section III, Division I, Subsection NF, *Supports*, 1995 Edition.

[6] ISG-4, *Cask Closure Weld Inspections*, Spent Fuel Project Office Interim Staff Guidance-4, United States Nuclear Regulatory Commission, Revision 1, May 21, 1999.

[7] ANSI N14.6, *Special Lifting Devices for Shipping Containers Weighing 10,000 Pounds (4,500 kg) or More*, American National Standards Institute, 1993.

temperatures are developed using the Diffusion Controlled Cavity Growth (DCCG) methodology provided in UCID-21181.[8] The DCCG methodology is not limited by fuel assembly burnup levels and is, therefore, applicable to the full range of burnups for which SNF assemblies are qualified for dry storage by this FSAR. The allowable cladding temperatures, which correspond to moderate and high burnups for the SNF assembly classes to be stored in the FuelSolutions™ W21 canister, are provided in Section 4.3.2 of this FSAR.

The short-term cladding temperature that is applicable to normal and off-normal conditions, as well as the fuel loading, canister closure, and canister transfer operations in the storage cask and transfer cask, is limited to 400°C to avoid accelerated cladding creep and/or cladding annealing effects. For accident conditions, the allowable cladding temperature is 570ºC based on PNL-4835.[9] Further, the FuelSolutions™ W21 canister is backfilled with helium during canister sealing operations to promote heat transfer and prevent cladding degradation in accordance with the *technical specification* contained in Section 12.3 of this FSAR.

The allowable temperatures for the structural steel components of the FuelSolutions™ W21 canister are based on the temperature limits provided in ASME Section II, Part D [10] tables referenced in ASME Section III, Subsections NB, NF, and NG, for those load conditions under which material properties are relied on for a structural load combination. For off-normal and accident conditions in which there are no concurrent significant structural loads (e.g., a postulated accidental cask drop), a short-term allowable temperature is established based on ASME Code Case N-47-33.[11] The specific allowable temperatures for the components of the canister are provided in Section 4.3.1 of this FSAR.

The FuelSolutions™ W21 canister is designed for a bounding thermal source term, as described in Section 4.1.5 of this FSAR. The maximum allowable storage cask temperatures are limited when containing the FuelSolutions™ W21 canister, in accordance with the *technical specification* contained in Section 12.3 of this FSAR.

Shielding

The allowable doses for an ISFSI or CISF using the FuelSolutions™ Storage System with the FuelSolutions™ W21 canister are delineated in 10CFR72.104 and 72.106.[12] Compliance with these criteria is necessarily site-specific and is to be demonstrated by the licensee, as discussed in Section 2.1.2 of the FuelSolutions™ Storage System FSAR.

---

[8] UCID-21181, *Spent Fuel Cladding Integrity During Dry Storage*, M.W. Schwartz and M.C. Witte, Lawrence Livermore National Laboratory, September 1987.

[9] PNL-4835, *Technical Basis for Storage of Zircaloy-Clad Spent Fuel in Inert Gases*, Johnson, A.B. and Gilbert, E.R., Pacific Northwest Laboratories, September 1983.

[10] American Society of Mechanical Engineers (ASME), Boiler and Pressure Vessel Code, Section II, *Materials*, Part D, *Properties*, 1995 Edition.

[11] Case N-47-33, *Class 1 Components in Elevated Temperature Service*, American Society of Mechanical Engineers (ASME), Boiler and Pressure Vessel Code, 1995 Code Cases, Nuclear Components, 1995 Edition.

[12] Title 10, U.S. Code of Federal Regulations, Part 72 (10CFR72), *Licensing Requirements for the Independent Storage of Spent Nuclear Fuel and High-Level Radioactive Waste*, 1995.

The FuelSolutions™ W21 canister provides axial shielding at the top and bottom ends to maintain occupational exposures ALARA during canister closure and canister transfer operations. The maximum allowable axial dose rates for the FuelSolutions™ W21 canister are controlled in accordance with plant-specific procedures and ALARA requirements (discussed in Section 10.1.3 of the FuelSolutions™ Storage System FSAR).

The FuelSolutions™ W21 canister is designed for the radiological source term specification, as described in Section 5.2 of this FSAR. The radiological source term for the FuelSolutions™ W21 canister is limited based on the Functional and Operating Limits contained in the *technical specification* in Section 12.3 of this FSAR. Representative calculated dose rates for the FuelSolutions™ W21 canister are provided in Section 5.4.2 of the FuelSolutions™ Storage System FSAR. These dose rates are used to perform an occupational exposure evaluation in accordance with 10CFR20,[13] as discussed in Sections 10.1 and 10.3 of the FuelSolutions™ Storage System FSAR.

Criticality

The FuelSolutions™ W21 canister provides criticality control for all design basis normal, off-normal, and postulated accident conditions, as discussed in Section 6.3.1 of this FSAR. The effective neutron multiplication factor for storage and transportation is limited to $k_{eff} < 0.95$ for fresh unirradiated intact fuel with optimum fresh water moderation and close reflection, including all biases and uncertainties. In addition, k_{eff} is shown to be less than the upper subcritical limit (USL) established using the methodology presented in NUREG/CR-5661.[14]

Criticality control is maintained by the geometric spacing of the fuel assemblies and fixed borated neutron absorbing materials incorporated into the canister basket assembly. The minimum specified boron concentration verified during material manufacture is further reduced by 25 % for criticality analysis. No credit is taken for soluble boron or burnup. Permanent deformations of the canister basket assembly for postulated accident conditions are considered in the criticality analysis. The maximum allowable initial enrichment for fuel assemblies to be stored in the FuelSolutions™ W21 canister are limited in accordance with the *technical specification* contained in Section 12.3 of this FSAR.

Confinement

The FuelSolutions™ W21 canister provides for confinement of all radioactive materials for all design basis normal, off-normal, and postulated accident conditions, as discussed in Sections 1.2.1.3 and 7.1 of this FSAR. An evaluation of the release of available fission products in accordance with specified release fractions based on the canister design leak rate is considered, as discussed in Section 7.3. The confinement function of the FuelSolutions™ W21 canister is verified through pneumatic pressure testing and helium leak testing performed in accordance with the *technical specifications* contained in Section 12.3 of the FuelSolutions™ Storage System FSAR.

---

[13] Title 10, U.S. Code of Federal Regulations, Part 20 (10CFR20), *Standards for Protection Against Radiation*, 1995.

[14] Dyer, H. R., and Parks, C. V., *Recommendations for Preparing the Criticality Safety Evaluation of Transportation Packages*, NUREG/CR-5661, Oak Ridge National Laboratories, April 1997.

Operations

There are no radioactive effluents that result from storage or transfer operations. Effluents generated during canister loading are handled by the plant's radwaste system and procedures.

Generic operating procedures for the FuelSolutions™ Storage System using the FuelSolutions™ W21 canister are provided in Chapter 8 of the FuelSolutions™ Storage System FSAR. Canister-specific parameters are provided in Chapter 8 of this FSAR. The licensee will develop site-specific detailed operating procedures based on requirements that comply with the 10CFR50[15] *technical specifications* for the plant and the 10CFR72 *technical specifications* contained in Section 12.3 of this FSAR and the FuelSolutions™ Storage System FSAR.

Acceptance Tests and Maintenance

The fabrication acceptance basis and maintenance program to be applied to the FuelSolutions™ W21 canister are described in Chapter 9 of this FSAR. The operational controls and limits to be applied to the FuelSolutions™ W21 canister are contained in Chapter 12 of this FSAR and the FuelSolutions™ Storage System FSAR. Application of these requirements will assure that the FuelSolutions™ W21 canister is fabricated, operated, and maintained in a manner that satisfies the design criteria defined in this chapter.

Decommissioning

The FuelSolutions™ W21 canister is designed to be transportable and is not required to be unloaded prior to shipment off-site. Decommissioning of the FuelSolutions™ Storage System using the FuelSolutions™ W21 canister is addressed in Chapter 14 of the FuelSolutions™ Storage System FSAR.

[15] Title 10, U.S. Code of Federal Regulations, Part 50 (10CFR50), *Domestic Licensing of Production and Utilization Facilities*, 1995.

This page intentionally left blank.

2.2 Spent Fuel to be Stored

The FuelSolutions™ W21 canister is designed to accommodate up to 21 SNF assemblies. The FuelSolutions™ W21 canister accommodates all domestic commercial PWR SNF assembly classes, with the following exceptions:

- South Texas
- Indian Point 1
- Haddam Neck
- San Onofre 1
- CE 16x16 (with control components)
- CE 16x16 System 80 (with control components)

The PWR fuel assemblies may be stored either with or without control components. Most PWR fuel assembly classes are accommodated within the FuelSolutions™ W21 canister without the need for fuel assembly spacers, as described in Section 1.2.1.3. The fuel assembly classes accommodated by the FuelSolutions™ W21 canister, and the corresponding FuelSolutions™ W21 canister class and type designated for use with each fuel assembly class, are provided in Table 1.2-3. Those fuel assembly classes that require the use of either a Type I or Type II fuel assembly spacer are also identified. Table 2.2-1 lists the specific fuel assembly types and associated characteristics acceptable for storage in the FuelSolutions™ W21 canister.

In addition to dimensional acceptance (specified in Table 1.2-3), the SNF assemblies to be stored in the FuelSolutions™ W21 canister must be intact zircaloy-clad fuel with no known or suspected cladding defects greater than pinhole leaks or hairline cracks. For SNF assemblies with burnup exceeding 45 GWd/MTU (up to 60 GWd/MTU), the cladding oxide thickness is limited to 70 μm. It is the responsibility of the licensee to assure that the fuel assemblies to be placed in the FuelSolutions™ W21 canister meet these criteria. Fuel assemblies that do not meet these criteria are considered damaged fuel, and are not acceptable for storage in the FuelSolutions™ W21 canister at this time. Missing or damaged fuel rods may be replaced with dummy rods that displace an equal amount of water as the original rods to permit storage in the FuelSolutions™ W21 canister.

The structural analysis of the FuelSolutions™ W21 canister for the bounding fuel assembly classes (maximum total weight and maximum weight per unit length) and demonstration of compliance with the applicable acceptance criteria, as documented in Chapter 3 of this FSAR, qualifies all the fuel assembly classes listed in Table 1.2-3 for storage in the designated FuelSolutions™ W21 canister class and type (see Tables 1.2-1 and 1.2-2). In addition, the maximum total loaded weight of the FuelSolutions™ W21 canister is shown to be bounded by or equivalent to the design basis canister weight used in the structural analysis of the FuelSolutions™ W150 Storage Cask and W100 Transfer Cask, as documented in Section 2.2 of the FuelSolutions™ Storage System FSAR.

Thermal qualification of the SNF assembly classes listed in Table 1.2-3 for storage in the FuelSolutions™ W21 canister is dependent on the characteristics of the unburned fuel assembly, the characteristics of the fuel assembly at the time of reactor discharge, and the time since

discharge (cooling time). A range of combinations of initial enrichment and burnup are included in the development of thermal and radiological source terms, as documented in Section 5.2 of this FSAR. The required minimum cooling time as a function of initial enrichment and burnup for each fuel assembly class accommodated by the FuelSolutions™ W21 canister is determined such that all thermal acceptance criteria for the FuelSolutions™ Storage System are satisfied as the basis for thermal fuel qualification, as described in Section 5.2 of this FSAR and the FuelSolutions™ Storage System FSAR.

For the purpose of evaluating the thermal performance of the FuelSolutions™ W21 canister, bounding design basis thermal source terms (decay heat power axial peaking profile) are used in the thermal analysis of the canister, as documented in Section 4.1.3 of this FSAR. In addition, the maximum total heat load and the axial heat load distribution for the FuelSolutions™ W21 canister are shown to be bounded by or equivalent to those used in the design basis thermal analysis of the FuelSolutions™ W150 Storage Cask and W100 Transfer Cask, as documented in Section 4.1.3 of the FuelSolutions™ Storage System FSAR.

Radiological qualification of the SNF assembly classes listed in Table 1.2-3 to be stored in the FuelSolutions™ W21 canister is also dependent on the characteristics of the unburned fuel assembly, the characteristics of the fuel assembly at the time of reactor discharge, and the time since discharge (cooling time). A range of combinations of initial enrichment and burnup are included in the development of thermal and radiological source terms, as documented in Section 5.2 of this FSAR. The required minimum cooling time as a function of initial enrichment and burnup for each fuel assembly class accommodated by the FuelSolutions™ W21 canister is determined such that the design basis allowable dose rates for the FuelSolutions™ Storage System are satisfied as the basis for radiological fuel qualification, as described in Section 5.2 of this FSAR and the FuelSolutions™ Storage System FSAR. For the purpose of evaluating the radiological performance of the FuelSolutions™ W21 canister, representative radiological source terms (neutron and gamma) are used in the shielding analysis of the canister, as documented in Section 5.2.2 of this FSAR and the FuelSolutions™ Storage System FSAR. In addition, representative dose rates for the FuelSolutions™ W150 Storage Cask and W100 Transfer Cask are provided in Section 5.4 of the FuelSolutions™ Storage System FSAR.

As documented in Section 6.3 of this FSAR, the criticality analysis for the most reactive fuel assembly classes and the demonstration of compliance with the applicable acceptance criteria, qualifies the fuel assembly classes listed in Table 1.2-3 and the specific fuel assembly types listed in Table 2.2-1 for storage in the designated FuelSolutions™ W21 canister class and type (see Tables 1.2-1 and 1.2-2). The maximum acceptable initial enrichments, regardless of burnup or cooling time for the fuel assembly classes accommodated by the FuelSolutions™ W21 canister, are provided in Section 6.1 of this FSAR and summarized in Table 2.2-1.

The *technical specification* requirements that must be satisfied to qualify SNF assemblies for storage in the FuelSolutions™ W21 canister are included in Section 12.3 of this FSAR.

The FuelSolutions™ W21 canister, as designed, will also accommodate damaged fuel, stainless clad fuel, MOX fuel, and consolidated fuel. The corresponding payload specifications and qualification basis for storage of these contents will be included in a future revision of this FuelSolutions™ Canister Storage FSAR.

Table 2.2-1 - Fuel Assemblies Acceptable for Storage in the FuelSolutions™ W21 Canister (6 pages)

Assembly Class(1), (2)	Assembly Type	Maximum Uranium Loading (kg)	Linear Uranium Loading (kg/in)	W21-1(3) Initial Enrichment (w/o ^{235}U)	W21-2(3) Initial Enrichment (w/o ^{235}U)	Applicable Cooling Table(4)		Criticality Class(7)
						Standard(5)	Limiting(6)	
Multiple Reactor Assembly Classes								
B&W 15x15 (8)	B&W 15x15 Mark B	471	3.27	≤ 4.7	≤ 5.0	W21-1-B	W21-1-B	B&W 15x15
	B&W 15x15 Mark B2							
	B&W 15x15 Mark B3							
	B&W 15x15 Mark B4							
	B&W 15x15 Mark B4Z					W21-1-A	W21-1-A	
	B&W 15x15 Mark B5					W21-1-B	W21-1-B	
	B&W 15x15 Mark B5Z					W21-1-A	W21-1-A	
	B&W 15x15 Mark B6							
	B&W 15x15 Mark B7							
	B&W 15x15 Mark B8							
	Other(9)					W21-1-B	W21-1-B	
B&W 17x17	B&W 17x17 Mark C	460	3.27	≤ 4.6	≤ 4.9	W21-1-B	W21-1-B	B&W 17x17
	Other(9)							

Notes: See page 2.2-8.

Table 2.2-1 - Fuel Assemblies Acceptable for Storage in the FuelSolutions™ W21 Canister (6 pages)

Assembly Class(1), (2)	Assembly Type	Maximum Uranium Loading (kg)	Linear Uranium Loading (kg/in)	W21-1(3) Initial Enrichment (w/o ^{235}U)	W21-2(3) Initial Enrichment (w/o ^{235}U)	Applicable Cooling Table(4)		Criticality Class(7)
						Standard(5)	Limiting(6)	
Multiple Reactor Assembly Classes (continued)								
CE 14x14	CE 14x14	450	3.27	≤ 5.0	≤ 5.0	W21-1-A	W21-1-B	CE 14x14
	CE 14x14 Maine Yankee							
	CE 14x14 Westinghouse							
	CE 14x14 ANF						W21-1-A	
	Other(9)						W21-1-B	
	CE 14x14 St. Lucie 1	450	3.27	≤ 5.0	≤ 5.0	W21-1-A	W21-1-B	CE 14x14A
	Other(9)							
CE 16x16	CE 16x16 Other(9)	450	3.27	≤ 5.0	≤ 5.0	W21-1-A (10)	NA	CE 16x16
CE 16x16 System 80	CE System 80 Other(9)	450	3.27	≤ 5.0	≤ 5.0	W21-1-A (10)	NA	CE 16x16

Notes: See page 2.2-8.

Table 2.2-1 - Fuel Assemblies Acceptable for Storage in the FuelSolutions™ W21 Canister (6 pages)

Assembly Class(1), (2)	Assembly Type	Maximum Uranium Loading (kg)	Linear Uranium Loading (kg/in)	W21-1(3) Initial Enrichment (w/o ^{235}U)	W21-2(3) Initial Enrichment (w/o ^{235}U)	Applicable Cooling Table(4)		Criticality Class(7)
						Standard(5)	Limiting(6)	
Multiple Reactor Assembly Classes (continued)								
WE 14x14	WE 14x14 STD	450	3.27	≤ 5.0	≤ 5.0	W21-1-B	W21-1-B	WE 14x14
	WE 14x14 LOPAR							
	WE 14x14 OFA					W21-1-A	W21-1-B	
	W 14x14 top rod						W21-1-A	
	WE 14x14 B&W					W21-1-B	W21-1-B	
	WE 14x14 ANF					W21-1-A	W21-1-A	
	Other(9)					W21-1-B	W21-1-B	
WE 15x15	WE 15x15 STD	471	3.27	≤ 4.7	≤ 5.0	W21-1-B	W21-1-B	WE 15x15
	WE 15x15 LOPAR							
	WE 15x15 OFA					W21-1-A	W21-1-B	
	WE 15x15 B&W	450				W21-1-B	W21-1-B	
	Other(9)							
	WE 15x15 ANF	450	3.27	≤ 4.9	≤ 5.0	W21-1-A	W21-1-A	W15x15A
	Other(9)							

Notes: See page 2.2-8.

Table 2.2-1 - Fuel Assemblies Acceptable for Storage in the FuelSolutions™ W21 Canister (6 pages)

Assembly Class(1), (2)	Assembly Type	Maximum Uranium Loading (kg)	Linear Uranium Loading (kg/in)	W21-1(3) Initial Enrichment (w/o ^{235}U)	W21-2(3) Initial Enrichment (w/o ^{235}U)	Applicable Cooling Table(4)		Criticality Class(7)
						Standard(5)	Limiting(6)	
Multiple Reactor Assembly Classes (continued)								
WE 17x17	WE 17x17 LOPAR	471	3.27	≤ 4.7	≤ 5.0	W21-1-B	W21-1-B	WE 17x17
	WE 17x17 B&W	450				W21-1-A		
	Other(9)					W21-1-B		
	WE 17x17 OFA	450	3.27	≤ 4.6	≤ 4.9	W21-1-A	W21-1-B	WE 17x17A
	Other(9)							
	WE 17x17 ANF	450	3.27	≤ 4.6	≤ 5.0	W21-1-A	W21-1-B	WE 17x17B
	Other(9)							
Single Reactor Assembly Classes								
Fort Calhoun	CE 14x14 Fort Calhoun	450	3.27	≤ 5.0	≤ 5.0	W21-1-A	W21-1-B	CE 14x14
	Other(9)							
Palisades	CE 15x15 Palisades	450	3.27	≤ 5.0	≤ 5.0	W21-1-A	W21-1-A	CE 15x15P
	ANF 15x15 Palisades							
	Other(9)							
St. Lucie 2	CE 16x16 St. Lucie 2	450	3.27	≤ 5.0	≤ 5.0	W21-1-A	W21-1-B	CE 16x16
	Other(9)							

Notes: See page 2.2-8.

Table 2.2-1 - Fuel Assemblies Acceptable for Storage in the FuelSolutions™ W21 Canister (6 pages)

Assembly Class(1), (2)	Assembly Type	Maximum Uranium Loading (kg)	Linear Uranium Loading (kg/in)	W21-1(3) Initial Enrichment (w/o ^{235}U)	W21-2(3) Initial Enrichment (w/o ^{235}U)	Applicable Cooling Table(4)		Criticality Class(7)
						Standard(5)	Limiting(6)	
Single Reactor Assembly Classes (continued)								
Yankee Rowe	CE 15x16 Yankee Rowe	450	3.27	≤ 5.0	≤ 5.0	W21-1-A	W21-1-A	15x16
	ANF 15x16 Yankee Rowe							
	Other(9)							
	UNC 15x16 Yankee Rowe	450	3.27	≤ 5.0	≤ 5.0	W21-1-B	W21-1-B	15x16A
	Other(9)							

Notes: See page 2.2-8.

Table 2.2-1 Notes:

(1) Assembly Class is defined per EIA Spent Fuel Discharge Report.[16]

(2) Fuel cladding shall be zircaloy, including zirconium-niobium alloys (e.g., Zirlo). Maximum assembly burnup is limited to 60,000 MWd/MTU. Fuel assembly dimensions and weights for each fuel assembly class are provided in Table 1.2-3. Fuels with integral fuel burnable absorbers (IFBA) are not qualified for storage at this time.

(3) Fuel loading specifications W21-1 and W21-2 are defined in accordance with Section 2.1.1 of the *technical specifications* contained in Section 12.3.

(4) Cooling tables in Section 5.2 include information on heat load and provide the required cooling time as a function of burnup and initial enrichment, which meets the thermal and radiological acceptance criteria defined in Chapters 4 and 5, respectively.

(5) "Standard" includes fuel assemblies with no control components or with negligible core region cobalt activation. These include thimble plugs, control rod assemblies, and zircaloy clad burnable poison rod assemblies (BPRAs) and axial power shaping rod assemblies (APSRAs).

(6) "Limiting" includes fuel assemblies containing control components with potentially significant cobalt activation. These include neutron source assemblies, and stainless steel clad BPRAs and APSRAs.

(7) Criticality Class definitions are per Table 6.1-1, and include definitions of cladding type and other fuel assembly characteristics relevant to criticality safety.

(8) Gray APSRAs for B&W 15x15 fuel class are not qualified for storage at this time.

(9) Other fuel assemblies that meet the defined parameters are qualified for storage.

(10) CE 16x16 and CE 16x16 System 80 assembly classes are qualified for storage without control components.

[16] Energy Information Administration, *Spent Nuclear Fuel Discharges from U.S. Reactors 1993*, U.S. Department of Energy, 1995.

2.3 Design Loadings

The FuelSolutions™ W21 canister is designed to provide safe dry storage of SNF in an ISFSI or CISF for 100 years at any location in the contiguous United States. The storage cask and transfer cask serve to provide biological shielding, physical protection, and structural support for the canister during storage and transfer under all design basis normal, off-normal, and postulated accident conditions, as addressed in the FuelSolutions™ Storage System FSAR. The FuelSolutions™ W21 canister is also designed for off-site transportation.

In accordance with 10CFR72, a range of long- and short-term natural ambient conditions are considered in the thermal evaluation of the W21 canister in the storage cask and transfer cask. These ambient conditions are assumed to occur concurrently with the design basis normal, off-normal, postulated accident (e.g., blocked vents, loss of neutron shield, etc.) and natural phenomena events and form the basis for the design of the W21 canister within the storage cask and transfer cask.

The design basis off-normal, postulated accident, and natural phenomena conditions are defined in Sections 2.3.1.5, 2.3.2.6, and 2.3.4, respectively. Consistent with the definitions in ANSI/ANS-57.9,[17] off-normal events are anticipated to occur with moderate frequency or on the order of once per calendar year. Postulated accident events are defined as those that might occur only once during the use of the canister within the storage cask or transfer cask.

The design basis conditions considered for the FuelSolutions™ W21 canister are as follows:

<u>Normal Conditions</u>

- Normal Ambient Conditions
- Internal Pressure
- Dead Load
- Handling Load
- Leakage of the Confinement Boundary

<u>Off-Normal Conditions</u>

- Extreme Ambient Conditions
- Internal Pressure
- Misaligned Cask During Horizontal Transfer
- Reflood Pressure
- Hydraulic Ram Failure During Horizontal Transfer
- Leakage of the Confinement Boundary

[17] ANSI/ANS 57.9, *Design Criteria for an Independent Spent Fuel Storage Installation (Dry Storage Type)*, American National Standards Institute, 1984.

Accident Conditions

- Accident Thermal Conditions
  - Storage Cask Vent Blockage
  - Transfer Cask Loss of Neutron Shield
- Cask Drop
- Storage Cask Tip-over on J-skid
- Fire
- Internal Pressure
- Leakage of the Confinement Boundary
- Explosive Overpressure

Natural Phenomena

- Flooding
- Tornado
- Earthquake
- Wind
- Burial Under Debris
- Lightning
- Snow and Ice

The canister is designed for the most severe environmental conditions and natural phenomena postulated to occur during storage over the entire service life of the canister, including canister fuel loading, closure, and transfer using the FuelSolutions™ W100 Transfer Cask and canister dry storage in a FuelSolutions™ W150 Storage Cask. The normal environmental conditions include the annual variation of ambient temperature, solar radiation (insolation), wind, snow, and ice. The off-normal environmental conditions include extreme ambient temperatures and insolation. The accident environmental conditions and natural phenomena include wind resulting from a tornado, impact of a missile generated by tornado, flood, earthquake, fire, and explosion. Totally blocked inlet and/or outlet vents on the storage cask and loss of the neutron shield on the transfer cask are also included in the accident conditions.

The effects of the normal, off-normal, and accident condition loadings defined in this section on the FuelSolutions™ W150 Storage Cask and W100 Transfer Cask are evaluated in the FuelSolutions™ Storage System FSAR.

2.3.1 Normal Conditions

2.3.1.1 Normal Ambient Conditions

The ambient conditions used for the design basis analysis of the FuelSolutions™ W21 canister for normal conditions are provided in Section 2.3.1.1 of the FuelSolutions™ Storage System FSAR. The corresponding structural and thermal analyses of the FuelSolutions™ W21 canister for normal ambient conditions during canister fuel loading, closure, transfer, and dry storage are documented in Sections 3.5 and 4.4 of this FSAR.

2.3.1.2 Internal Pressure

The normal condition internal pressure for the FuelSolutions™ W21 canister during dry storage is based on the initial canister helium backfill pressure, the normal condition canister temperatures, and an assumed failure of 1% of the fuel rods with complete release of their associated fill gases and 30% of their fission gases to the canister cavity. The design basis internal pressure for this condition is 10 psig. The structural effects of normal condition internal pressure on the canister are evaluated in Section 3.5 of this FSAR.

Normal condition internal pressure during draining of the canister cavity after the inner closure plate is welded to the canister shell is also evaluated. This load is defined as a 30 psig internal pressure, which is monitored in accordance with the operating procedures contained in Section 8.1.8 of the FuelSolutions™ Storage System FSAR. The structural effects of this load are also evaluated in Section 3.5 of this FSAR.

2.3.1.3 Dead Load

This load includes the dead weight of the materials of construction and the contents for the FuelSolutions™ W21 canister, acting either horizontally or vertically.

2.3.1.4 Handling Load

For normal conditions, this load includes normal handling loads associated with vertical or horizontal transfer of the FuelSolutions™ W21 canister from or to a FuelSolutions™ W100 Transfer Cask, and to or from a FuelSolutions™ W150 Storage Cask or a transportation cask.

For vertical canister transfer, the handling load is defined as 15%[18] of the maximum loaded canister weight, which acts on the top end outer closure plate of the canister. For horizontal canister transfer between a storage cask, transfer cask, or transportation cask, the handling load is defined as a pushing or pulling axial force of 45,000 pounds acting on the outer closure plate of either end of the canister due to friction forces that developed between the canister shell and cask rails. The vibration loading normally incident to on-site transfer is conservatively defined in accordance with NUREG/CR-0128[19] as ±0.6 *g* acting in the vertical direction, ±0.3 *g* acting in the longitudinal direction, and ±0.2 *g* acting in the lateral direction, simultaneously.

---

[18] CMAA #70, *Specifications for Electric Overhead Traveling Cranes*, Crane Manufacturers Association of America (CMAA), 1988.

[19] NUREG/CR-0128, *Shock and Vibration Environment for a Large Shipping Container During Truck Transport*, U.S. Nuclear Regulatory Commission, May 1978.

The structural effects of normal condition handling loads on the canister are evaluated in Section 3.5 of this FSAR. The effects of these loads on the FuelSolutions™ W100 Transfer Cask and W150 Storage Cask are addressed in the FuelSolutions™ Storage System FSAR.

2.3.1.5 Leakage of the Confinement Boundary Under Normal Conditions

The FuelSolutions™ W21 canister is evaluated for the release of internal gases and aerosol contents to the atmosphere based on the design leak rate of the canister as defined in the *technical specification* in Section 12.3 of the FuelSolutions™ Storage System FSAR. It is assumed for this evaluation that 1% of all fuel rods fail. The corresponding nuclide release fractions are used to determine the quantity of radioactive material available for release. The radiological evaluation for this postulated event, including the assumptions used in the analysis, is documented in Section 7.2 of this FSAR.

2.3.2 Off-Normal Conditions

2.3.2.1 Extreme Ambient Conditions

The extreme ambient conditions used for the design basis analysis of the FuelSolutions™ W21 canister for off-normal conditions are provided in Section 2.3.2.1 of the FuelSolutions™ Storage System FSAR. The temperature distribution in the canister for off-normal conditions and comparisons to allowable values is provided in Section 4.5 of this FSAR. The structural effects of off-normal condition temperatures on the canister are evaluated in Section 3.6 of this FSAR.

2.3.2.2 Internal Pressure

The off-normal condition internal pressure for the FuelSolutions™ W21 canister during dry storage is based on the initial canister helium backfill pressure, the off-normal condition canister temperatures, and an assumed failure of 10% of the fuel rods with complete release of their associated fill gases and 30% of their fission gases to the canister cavity. The design basis internal pressure for this condition is 16 psig. The structural effects of off-normal condition internal pressure on the canister are evaluated in Section 3.6 of this FSAR.

The off-normal condition internal pressure is conservatively used as the initial condition for the evaluation of the FuelSolutions™ W21 canister for the postulated blockage of the storage cask vents discussed in Section 2.3.3.1.

2.3.2.3 Misaligned Casks During Horizontal Canister Transfer

This off-normal loading condition is postulated to occur as a result of a misalignment of a transfer cask with a storage cask or transportation cask during horizontal transfer of the FuelSolutions™ W21 canister. This load is defined as a pushing axial force of 70,000 pounds or pulling axial force of 50,000 pounds, acting on the outer closure plate on either end of the canister, which is reacted by the storage cask, transfer cask, or transportation cask, as described in Section 2.3.2.4 of the FuelSolutions™ Storage System FSAR. The structural effects of off-normal condition misalignment loads on the canister are evaluated in Section 3.6 of this FSAR. The effects of this load on the transportation cask are addressed in a separate transportation license application.

2.3.2.4 Reflood Pressure

In the unlikely event of canister reopening, the canister cavity is reflooded with water. Depending on the temperatures inside the canister, the water may flash to steam resulting in internal pressures in the canister during reflood. This load is defined as a 100 psig internal pressure.

2.3.2.5 Hydraulic Ram Failure During Horizontal Transfer

During horizontal transfer of the canister between the storage cask and transfer cask, the transfer cask and transportation cask, or the storage cask and transportation cask, a hydraulic ram is used to slide the canister between casks by pushing or pulling the canister. Under normal conditions, the hydraulic ram operates normally and canister horizontal transfer operations are completed. However, it is postulated that a mechanical failure of the hydraulic ram may occur during the canister transfer operation, with the canister transfer only partially completed. The effects of this postulated off-normal event are evaluated in Section 11.1 of this FSAR.

2.3.2.6 Leakage of the Confinement Boundary Under Off-Normal Conditions

As demonstrated in Chapter 3 of this FSAR, the confinement boundary of the FuelSolutions™ W21 canister (which consists of the canister shell, the bottom closure plate, the top end inner and outer closure plates, and the closure welds) is not compromised by any design basis normal, off-normal, or postulated accident condition loadings. The evaluation of the release of internal gases and aerosol contents to the atmosphere is based on the design leak rate of the canister, as defined in the *technical specification* in Section 12.3 of the FuelSolutions™ Storage System FSAR. It is assumed for this postulated event that 10% of all fuel rods fail. The corresponding nuclide release fractions are used to determine the quantity of radioactive material available for release. The radiological evaluation for this postulated event, including the assumptions used in the analysis, is documented in Section 7.2 of this FSAR.

2.3.3 Postulated Accident Conditions

2.3.3.1 Accident Thermal Conditions

2.3.3.1.1 Storage Cask Vent Blockage

The extreme ambient conditions used for the design basis analysis of the FuelSolutions™ W21 canister for postulated accident conditions are provided in Section 2.3.3.1 of the FuelSolutions™ Storage System FSAR. The temperature distribution in the canister for accident conditions, including the effects of a complete blockage of the storage cask inlet and outlet vents and comparisons to allowable values are provided in Section 4.6 of this FSAR. The corresponding structural effects of accident condition temperatures on the canister are evaluated in Section 3.7 of this FSAR.

2.3.3.1.2 Transfer Cask Loss of Neutron Shield

The extreme ambient conditions used for the design basis analysis of the FuelSolutions™ W21 canister for postulated accident conditions are provided in Section 2.3.3.1 of the FuelSolutions™ Storage System FSAR. The temperature distribution in the canister for accident conditions,

including the effects of a loss of the transfer cask neutron shield and comparisons to allowable values are provided in Section 4.6 of this FSAR. The corresponding structural effects of accident condition temperatures on the canister are evaluated in Section 3.7 of this FSAR.

2.3.3.2 Cask Drop and Tip-over

The postulated drop accident conditions for a loaded storage cask or transfer cask are defined in Section 2.3.3.2 of the FuelSolutions™ Storage System FSAR. The postulated storage cask tip-over on the J-skid accident condition is defined in Section 2.3.3.3 of the FuelSolutions™ Storage System FSAR. The determination of the resulting impact loads is documented in Section 3.7 of the FuelSolutions™ Storage System FSAR. The structural evaluation of the FuelSolutions™ W21 canister for these postulated cask drop and tip-over accident conditions is documented in Section 3.7 of this FSAR.

2.3.3.3 Fire

The postulated design basis fire is defined in Section 2.3.3.4 of the FuelSolutions™ Storage System FSAR. The resulting thermal effects on the storage cask and transfer cask are documented in Section 4.6 of the FuelSolutions™ Storage System FSAR. The evaluation of the thermal effects for the design basis fire on the FuelSolutions™ W21 canister is provided in Section 4.6 of this FSAR.

2.3.3.4 Internal Pressure

The postulated accident condition internal pressure for the FuelSolutions™ W21 canister is based on the initial canister helium backfill pressure, the off-normal condition canister temperatures, and the assumed failure of 100% of the fuel rods with complete release of their associated fill gases and 30% of their fission gases. With one exception, the design basis internal pressure for this condition is 69 psig. The design basis internal pressure for the W21T-LL canister, which contains the CE16x16 fuel assemblies, is 45 psig, per Table 4.6-2. The structural effects of accident condition internal pressure on the canister are evaluated in Section 3.7 of this FSAR.

2.3.3.5 Leakage of the Confinement Boundary Under Accident Conditions

As demonstrated in Chapter 3 of this FSAR, the confinement boundary of the FuelSolutions™ W21 canister (which consists of the canister shell, the bottom closure plate, the top end inner and outer closure plates, and the closure welds) is not compromised by any design basis normal, off-normal, or postulated accident condition loadings. The evaluation of the release of internal gases and aerosol contents to the atmosphere is based on the design leak rate of the canister, as defined in the *technical specification* in Section 12.3 of the FuelSolutions™ Storage System FSAR. It is assumed for this postulated event that 100% of all fuel rods fail. The corresponding nuclide release fractions are used to determine the quantity of radioactive material available for release. The radiological evaluation for this postulated event, including the assumptions used in the analysis, is documented in Section 7.3 of this FSAR.

2.3.3.6 Explosive Overpressure

The FuelSolutions™ W21 canister is protected against explosive overpressure, as the canister is completely enclosed in the storage cask or transfer cask. Therefore, the canister is not subjected to direct explosive overpressure-related loadings. For the purpose of providing a design basis external pressure criteria for comparison to site-specific hazards, the explosive overpressure acting on the canister is taken to be the same as the external pressure due to flooding, as described in Section 2.3.4.1.

2.3.4 Natural Phenomena

2.3.4.1 Flooding

The FuelSolutions™ W21 canister is designed for an enveloping design basis flood, postulated to result from natural phenomena such as a tsunami and seiches. For the purpose of this bounding generic evaluation, the 50-foot flood height presented in Section 2.3.4.1 of the FuelSolutions™ Storage System FSAR is used.

The canister is conservatively evaluated for a 50-foot hydraulic head of water, which corresponds to an external pressure of:

$$p = 50\ ft \times 62.4\ pcf = 3{,}120\ psf = 21.7\ psi$$

The structural evaluation of the FuelSolutions™ W21 canister for the effects of external pressure due to flooding is documented in Section 3.7 of this FSAR. Since the FuelSolutions™ W21 canister uses fixed borated neutron absorbers and is designed for fresh water optimum moderation, criticality safety during flooding is assured.

2.3.4.2 Tornado

Since the canister is completely enclosed in the storage cask or transfer cask, the canister is protected against design basis tornado (DBT) missile impact for all types of missiles and tornado winds. Therefore, the canister is not subjected to any tornado-related loadings.

2.3.4.3 Earthquake

The design basis earthquake (DBE) load is determined in Section 2.3.4.4 of the FuelSolutions™ Storage System FSAR. The FuelSolutions™ W21 canister is evaluated for the effects of seismic accelerations with the canister in the storage cask or the transfer cask. The resulting structural analysis is documented in Section 3.7 of this FSAR.

2.3.4.4 Wind

Since the canister is completely enclosed in the storage cask or transfer cask, the FuelSolutions™ W21 canister is protected against design basis wind (DBW). Therefore, the canister is not subjected to any wind-related loading.

2.3.4.5 Burial Under Debris

Debris may be deposited around the storage cask due to a number of phenomena, such as wind storms, floods, or land slides. The consequence of such events is anticipated to be partial or

complete blockage of the storage cask inlet vents. This condition is bounded by the fully blocked vent case described in Section 2.3.3.1.

2.3.4.6 Lightning

The effects of lightning are addressed in Section 2.3.4.7 of the FuelSolutions™ Storage System FSAR.

2.3.4.7 Snow and Ice

Since the canister is completely enclosed within the transfer cask or storage cask, the FuelSolutions™ W21 canister is protected from snow and ice loadings. Therefore, the canister is not subjected to any snow- and ice-related loadings.

2.3.4.8 Site-Specific Conditions

Other site-specific conditions will be addressed on a site-specific basis, as applicable. Each licensee is required to perform a 10CFR72.212 evaluation to assure that no site-specific environmental phenomena or design conditions exist that are not bounded by or equivalent to those defined in this chapter and the C of C.

2.3.5 Load Combination Criteria

The FuelSolutions™ W21 canister is subjected to normal, off-normal, postulated accident, and natural phenomena condition loadings as defined in this chapter. These loads are summarized as follows:

- Normal Loads – Normal ambient conditions, internal pressure, dead weight, handling.
- Off-Normal Loads – Extreme ambient conditions, off-normal internal pressure, misalignment during canister horizontal transfer, reflood.
- Postulated Accident and Natural Phenomena Loads – Complete blockage of storage cask air inlet and outlet vents, transfer cask loss of neutron shield, cask drop, cask tip-over, fire, accident internal pressure, flood, earthquake.

The FuelSolutions™ W21 canister internal basket and shell assembly components are designed for the load combinations shown in Table 2.3-1. These combinations are categorized based on the ASME service level criteria for evaluation against the associated allowable values. The allowable values are provided in Chapter 3 of this FSAR.

- Off-Normal Loads – Extreme ambient conditions, off-normal internal pressure, misalignment during canister horizontal transfer, reflood.
- Postulated Accident and Natural Phenomena Loads – Complete blockage of storage cask air inlet and outlet vents, transfer cask loss of neutron shield, cask drop, cask tip-over, fire, accident internal pressure, flood, earthquake.

The FuelSolutions™ W21 canister internal basket and shell assembly components are designed for the load combinations shown in Table 2.3-1. These combinations are categorized based on the ASME service level criteria for evaluation against the associated allowable values. The allowable values are provided in Chapter 3 of this FSAR.

Load combination results and comparisons to allowable values for the FuelSolutions™ W21 canister for normal, off-normal, and accident conditions are provided in Sections 3.5, 3.6, and 3.7 of this FSAR, respectively.

Table 2.3-1 - W21 Canister Load Combinations[1,2]

Comb. No.	Dead-weight	Handling	Internal Pressure	Thermal	Earth-quake	Drop or Tip-over	Flood
Normal Operating Conditions (Service Level A)							
A1	D_{V1}		P_b				
A2	D_v		P	T			
A3	D_h		P	T			
A4	D_v	L_{hv}	P	T			
A5	D_h	L_{hh1} or L_{hh2}	P	T			
Off-Normal Conditions (Service Level B)							
B1	D_v		P_o	T_o			
B2	D_v	L_{hv}	P_o	T_o			
B3	D_h	L_{hh1} or L_{hh2}	P_o	T_o			
B4	D_h	L_m	P	T			
Off-Normal Conditions (Service Level C)							
C1	D_v		P_r	T_r			
Postulated Accident Conditions (Service Level D)							
D1	D_v	L_{hv}	P_a	T_o			
D2	D_h	L_{hh1} or L_{hh2}	P_a	T_o			
D3			P_o	T		A_S	
D4			P_o	T		A_t	
D5			P_o	T		A_{S1}	
D6	D_v or D_h		P_o	T	E		
D7	D_v or D_h		P_o	T_a			
D8	D_v		P	T			F

Table 2.3-1 Notes:

(1) Allowable canister shell stresses are in accordance with ASME Section III, Subsections NB and NF. Allowable canister basket stresses are in accordance with ASME Section III, Subsection NG.

(2) Load definitions are as follows:

D_v = Loading due to deadweight - vertical canister

D_{V1} = Loading due to deadweight - vertical canister with weight of auxiliary shield plate and automated welder, excluding weight of outer closure plate

(continued on next page)

Table 2.3-1 Notes (cont'd):

D_h = Loading due to deadweight - horizontal canister

L_{hv} = Loading due to normal handling - vertical canister transfer

L_{hh1} = Loading due to normal handling - horizontal canister transfer

L_{hh2} = Loading due to normal handling - on-site transport

L_m = Loading due to misalignment

P_b = Loading due to draining pressure

P = Loading due to normal internal pressure including 1% cladding failure

P_o = Loading due to off-normal internal pressure including 10% cladding failure

P_a = Loading due to accident internal pressure including 100% cladding failure

P_r = Loading due to reflood internal pressure

T = Loading due to normal thermal

T_o = Loading due to off-normal thermal, including canister vacuum drying

T_a = Loading due to accident thermal (fully blocked storage cask vents, transfer cask loss of neutron shield, or fire)

T_r = Loading due to reflood thermal

E = Loading due to earthquake

A_S = Loading due to postulated storage cask drop

A_t = Loading due to postulated transfer cask drop

A_{S1} = Loading due to postulated storage cask tip-over

F = Loading due to postulated flood

This page intentionally left blank.

2.4 Safety Protection Systems

The safety protection systems associated with the FuelSolutions™ Storage System are described in the FuelSolutions™ Storage System FSAR.

This page intentionally left blank.

2.5 Supplemental Information

2.5.1 ASME Code Compliance

As discussed in Section 2.1.2, the FuelSolutions™ W21 canister is designed and fabricated with Section III of the ASME Code to the maximum extent practicable, consistent with other canister-based dry storage systems previously approved by the NRC. The clarifications made to the applicable portions of the ASME Code and the basis for these clarifications is provided in Table 2.5-1.

Table 2.5-1 - ASME Code Requirements Compliance Summary (13 pages)

Item	ASME Code Requirement	Issue	Alternative Compliance Basis
Section III, Subsection NCA (applicable to both Canister and Basket):			
1	**General for Subsection NCA**	1. The terms "Certificate Holder" and "Owner" used throughout this subsection are not applicable for a 10CFR72 system. 2. The Division 2 (concrete) requirements provided throughout this subsection are not applicable for a 10CFR72 system.	1. BNG Fuel Solutions (BFS) bears the responsibilities associated with a "Certificate Holder" or "Owner" relative to the FuelSolutions™ SFMS. 2. This compliance summary table only addresses FuelSolutions™ canisters, which do not contain any concrete.
2	**NCA-1140, "Use of Code Editions, Addenda, and Cases:"** "(a)(1) Under the rules of this Section, the Owner or his designees shall establish the Code Edition and Addenda to be included in the Design Specifications . . ."	The FuelSolutions™ SFMS documentation does not include an ASME Code Design Specification.	The requirements and criteria typically contained in an ASME Code Design Specification are contained in this FSAR.

Table 2.5-1 - ASME Code Requirements Compliance Summary (13 pages)

Item	ASME Code Requirement	Issue	Alternative Compliance Basis
3	**NCA-1210, "Components:"** "Each component of a nuclear power plant shall require a Design Specification (NCA-3250), Design Report (NCA-3350, NCA-3550), and other design documents specified in NCA-3800. Data Reports and stamping shall be as required in NCA-8000."	The FuelSolutions™ SFMS documentation does not contain the following ASME Code documents: 1. Design Specification 2. Design Report 3. Owner's Certificate of Authorization 4. Authorized Inspection Agency Written Agreement 5. Owner's Data Report 6. Overpressure Protection Report.	1. See Item 2. 2. The information typically reported in an ASME Code Design Report is contained in this FSAR. 3. An Owner's Certificate of Authorization, a written agreement with an Authorized Inspection Agency, an Owner's Data Report, and an Overpressure Protection Report are not typically provided for components licensed under 10CFR72.
4	**NCA-1220, "Materials"**	Not all non-pressure retaining materials specified in this FuelSolutions™ Canister Storage FSAR are listed as ASME Section III materials.	FuelSolutions™ canisters are purchased, identified, controlled, and manufactured using a graded quality approach in accordance with the NRC-approved BFS QA Program based on NQA-1, NRC Regulatory Guide 7.10, and NUREG/CR-6407 criteria.
5	**NCA-1281, "Activities and Requirements:"** "… Data Reports and stamping shall be as required in NCA-8000."	See Item 19.	See Item 19.
6	**NCA-2000, "Classification of Components"**	The classification of components is usually provided in a Design Specification.	See Item 2.

Table 2.5-1 - ASME Code Requirements Compliance Summary (13 pages)

Item	ASME Code Requirement	Issue	Alternative Compliance Basis
7	**NCA-2142, "Establishment of Design, Service, and Test Loadings and Limits:"** "In the Design Specification, the Owner or his designee shall identify the loadings and combinations of loadings and establish the appropriate Design, Service, and Test Limits for each component or support . . ."	See Item 2.	See Item 2.
8	**NCA-3100, "General"**	ASME Code accreditation does not apply.	See Item 1.
9	**NCA-3200, "Owner's Responsibilities"**	An Owner's responsibilities under the ASME Code do not apply.	An Owner's Certificate of Authorization, a Design Specification, a Design Report, an Overpressure Protection Report, and an Owner's Data Report are not typically provided for components licensed under 10CFR72.
10	**NCA-3300, "Responsibilities of a Designer - Division 2"**	See Item 1.	See Item 1.
11	**NCA-3400, "Responsibilities of an N Certificate Holder - Division 2"**	See Item 1.	See Item 1.
12	**NCA-3500, "Responsibilities of an N Certificate Holder - Division 1"**	See Item 1.	See Item 1. Design and fabrication requirements are provided in this FSAR and related procurement/fabrication drawings and specifications.
13	**NCA-3600, "Responsibilities of an NPT Certificate Holder"**	See Item 1.	See Item 12.
14	**NCA-3700, "Responsibilities of an NA Certificate Holder"**	See Item 1.	See Item 12.

Table 2.5-1 - ASME Code Requirements Compliance Summary (13 pages)

Item	ASME Code Requirement	Issue	Alternative Compliance Basis
15	**NCA-3800, "Metallic Material Organization's Quality System Program"**	Materials for a FuelSolutions™ canister may be purchased from suppliers that are not certified per the requirements of NCA-3800.	Material suppliers are qualified per NCA-3800 or the NRC-approved BFS QA Program based on the requirements of NQA-1, NRC Regulatory Guide 7.10, and NUREG/CR-6407 criteria.
16	**NCA-3900, "Nonmetallic Material Manufacturer's and Constituent Suppliers Quality System Programs"**	See Item 1.	See Item 1.
17	**NCA-4000, "Quality Assurance"**	These QA requirements do not apply.	See Item 4.
18	**NCA-5000, "Authorized Inspection"**	The manufacturing or operation of the FuelSolutions™ SFMS does not use an Authorized Inspection Agency.	An Authorized Inspection Agency is not typically used in the manufacturing or operation of components licensed under 10CFR72.
19	**NCA-8000, "Certificates of Authorization, Nameplates, Code Symbol Stamping, and Data Reports"**	The FuelSolutions™ SFMS does not use an ASME Code Certificate of Authorization, a Code Symbol Stamp, or a Data Report.	An ASME Code Certificate of Authorization, a Code Symbol Stamp, or a Data Report is not typically required for components licensed under 10CFR72. Nameplate information is provided on each FuelSolutions™ canister.
Section III, Subsection NB (applicable to Canister pressure-retaining components):			
20	**NB-1130, "Boundary of Components:"** "The Design Specification shall define the boundary of a component to which piping or another component is attached."	See Item 6.	See Item 6.

Table 2.5-1 - ASME Code Requirements Compliance Summary (13 pages)

Item	ASME Code Requirement	Issue	Alternative Compliance Basis
21	**NB-1132.2, "Jurisdictional Boundary:"** "The jurisdictional boundary between a pressure-retaining component and an attachment defined in the Design Specification shall not be any closer to the pressure-retaining portion of the component than as defined in (a) through (g) below . . ."	See Item 6.	See Item 6.
22	**NB-2160, "Deterioration of Material In Service:"** "It is the responsibility of the Owner to select material suitable for the conditions stated in the Design Specifications (NCA-3250), with specific attention being given to the effects of service conditions upon the properties of the material. . . . Any special requirement shall be specified in the Design Specifications (NCA-3252 and NB-3124) . . ."	See Item 2.	See Item 2.
23	**NB-2610, "Documentation and Maintenance of Quality System Programs:"** "(a) Except as provided in (b) below, Material Manufacturers and Material Suppliers shall have a Quality System Program or an Identification and Verification Program, as applicable, which meets the requirements of NCA-3800 . . ."	See Item 15.	See Item 15.

Table 2.5-1 - ASME Code Requirements Compliance Summary (13 pages)

Item	ASME Code Requirement	Issue	Alternative Compliance Basis
24	**NB-3113, "Service Conditions:"** "Each service condition to which the components may be subjected shall be classified in accordance with NCA-2142 and Service Limits (NCA-2142.4(b)) designated in the Design Specifications in such detail as will provide a complete basis for design, construction, and inspection in accordance with this Article . . ."	See Item 2.	See Item 2.
25	**NB-3134, "Leak Tightness:"** "Where a system leak tightness greater than that required or demonstrated by a hydrostatic test is required, the leak tightness requirements for each component shall be set forth in the Design Specifications."	See Item 2.	See Item 2.
26	**NB-3220, "Stress Limits for Other Than Bolts"**	This section makes a number of references to an ASME Code Design Specification. See Item 2.	See Item 2.
27	**NB-4121, "Means of Certification:"** "The Certificate Holder for an item shall certify, by application of the appropriate Code Symbol and completion of the appropriate Data Report in accordance with NCA-8000, that materials used comply with the requirements of NB-2000 and that the fabrication or installation complies with the requirements of this Article."	The FuelSolutions™ SFMS does not use an ASME Code Symbol Stamp or a Data Report.	An ASME Code Symbol Stamp or Data Report is not typically required for components licensed under 10CFR72. Also see Item 15.

Table 2.5-1 - ASME Code Requirements Compliance Summary (13 pages)

Item	ASME Code Requirement	Issue	Alternative Compliance Basis
28	**NB-4243, "Category C Weld Joints in Vessels and Similar Weld Joints in Other Components:"** "Category C weld joints in vessels and similar weld joints in other components shall be full penetration joints . . . Either a butt welded joint or a full penetration corner joint as shown in Fig. NB-4243-1 shall be used."	The FuelSolutions™ canister top end closure employs the following cover-to-shell weld types: 1. Top inner cover - a single-sided partial penetration weld. 2. Top outer cover - a single-sided partial penetration weld.	The FuelSolutions™ canister top end closure employs multi-pass, redundant welds subjected to multi-level liquid penetrant examinations and a combined pneumatic pressure and helium leak rate test at a hydrostatic test pressure to assure structural integrity and leak tightness. The design of the inner closure weld incorporates a stress-reduction factor of 0.9 to account for use of multi-pass PT examination and helium leak testing. The design of the outer closure weld complies with ISG-4. The examination of the inner and outer closure plate welds complies with guidance provided in ISG-4.
29	**NB-5231, "General Requirements:"** "(a) Category C full penetration butt welded joints in vessels and similar welded joints in other components shall be examined by the radiographic and either liquid penetrant or magnetic particle method."	The FuelSolutions™ canister top end closures are not radiographically examined.	See Item 28.

Table 2.5-1 - ASME Code Requirements Compliance Summary (13 pages)

Item	ASME Code Requirement	Issue	Alternative Compliance Basis
30	**NB-6112, "Pneumatic Testing:"** "A pneumatic test in accordance with NB-6300 may be substituted for the hydrostatic test when permitted by NB-6112.1(a)." **NB-6112.1, "Pneumatic Test Limitations:"** "(a) A pneumatic test may be used in lieu of a hydrostatic test only when any of the following conditions exists: (1) when components, appurtenances, or systems are so designed or supported that they cannot safely be filled with liquid; (2) when components, appurtenances, or systems which are not readily dried are to be used in services where traces of the testing medium cannot be tolerate. (b) A pneumatic test at a pressure not to exceed 25% of the Design Pressure may be applied, prior to either a hydrostatic or a pneumatic test, as a means of locating leaks."	The FuelSolutions™ canisters employ a combined pneumatic pressure and helium leak rate test at a hydrostatic test pressure to assure structural integrity and leak tightness.	Because a dry SNF assembly storage canister is a 10CFR72 licensed component requiring a helium leak rate test, the combination of this leak rate test with a pneumatic pressure test at a hydrostatic test pressure is operationally efficient and consistent with ALARA principles, while still being very conservative due to the molecular size of the testing medium and the use of helium leak rate vs. visual examination acceptance criteria.
31	**NB-6200, "Hydrostatic Tests"**	See Item 30.	See Item 30.
32	**NB-7000, "Overpressure Protection"**	A FuelSolutions™ canister is not designed to include an overpressure protection device.	By their very nature, canisters and casks designed to dry store SNF assemblies are licensed without any type of overpressure protection device or vent path of any kind.

Table 2.5-1 - ASME Code Requirements Compliance Summary (13 pages)

Item	ASME Code Requirement	Issue	Alternative Compliance Basis
33	**NB-8000, "Nameplates, Stamping, and Reports"**	The FuelSolutions™ SFMS does not use an ASME Code Symbol Stamp or a Data Report.	An ASME Code Symbol Stamp or a Data Report is not typically required for components licensed under 10CFR72. Nameplate information is provided on each FuelSolutions™ canister.
Section III, Subsection NG (applicable to Basket):			
34	**NG-2160, "Deterioration of Material In Service:"** "It is the responsibility of the Owner to select material suitable for the conditions stated in the Design Specifications (NCA-3250), with specific attention being given to the effects of service conditions upon the properties of the material."	See Item 2.	See Item 2.
35	**NG-2330, "Test Requirements and Acceptance Standards"**	FuelSolutions™ canister basket material is not impact tested to the requirements of NG-2330.	Canister basket is licensed for storage and transportation, and therefore materials are impact tested in accordance with NRC criteria provided in Regulatory Guide 7.11 and NUREG/CR-6407 for Category II materials.
36	**NG-2610, "Documentation and Maintenance of Quality System Programs:"** "(a) Except as provided in (b) below, Material Manufacturers and Material Suppliers shall have a Quality System Program or an Identification and Verification Program, as applicable, which meets the requirements of NCA-3800 . . ."	See Item 15.	See Item 15.

Table 2.5-1 - ASME Code Requirements Compliance Summary (13 pages)

Item	ASME Code Requirement	Issue	Alternative Compliance Basis
37	**NG-3113, "Service Loadings:"** "Each loading to which the structure may be subjected shall be classified in accordance with NCA-2142 and Service Limits (NCA-2142.4(b)) designated in the Design Specifications in such detail as will provide a complete basis for design, construction, and inspection in accordance with this Article . . ."	See Item 2.	See Item 2.
38	**NG-3220, "Stress Limits for Other Than Threaded Structural Fasteners"**	This section makes a number of references to an ASME Code Design Specification. See Item 2.	See Item 2.
39	**NG-4121, "Means of Certification:"** "The Certificate Holder for an item shall certify, by application of the appropriate Code Symbol and completion of the appropriate Data Report in accordance with NCA-8000, that materials used comply with the requirements of NG-2000 and that the fabrication or installation complies with the requirements of this Article."	The FuelSolutions™ SFMS does not use an ASME Code Symbol Stamp or a Data Report.	An ASME Code Symbol Stamp or Data Report is not typically required for components licensed under 10CFR72. Also see Item 15.
40	**NG-8000, "Nameplates, Stamping, and Reports"**	The FuelSolutions™ SFMS does not use an ASME Code Symbol Stamp or a Data Report.	An ASME Code Symbol Stamp or a Data Report is not typically required for components licensed under 10CFR72. Nameplate information is provided on each FuelSolutions™ canister.

Table 2.5-1 - ASME Code Requirements Compliance Summary (13 pages)

Item	ASME Code Requirement	Issue	Alternative Compliance Basis
Section III, Subsection NF (applicable to Canister non-pressure retaining components):			
41	**NF-1111.1, "Design Requirements:"** **"In addition to the requirements of NCA-3240, the Owner shall be responsible that loads . . . are adequately transferred without loss of the pressure boundary integrity for the Design or Service Loadings specified in the Design Specification governing the component or piping."**	See Item 2.	See Item 2.
42	**NF-1130, "Boundaries of Jurisdiction"**	See Item 6.	See Item 6.
43	**NF-2130, "Certification of Material:"** **"(a) Material used in construction of component supports shall be certified. Certified Material Test Reports in accordance with NCA-3867.4 shall be provided."**	See Item 15.	See Item 15. When CMTRs are required by the BFS Quality Assurance Program, they will be provided per the requirements of NCA-3862.
44	**NF-2160, "Deterioration of Material In Service:"** **"It is the responsibility of the Owner to select material suitable for the conditions stated in the Design Specifications (NCA-3250), with specific attention being given to the effects of Service Conditions upon the properties of the material."**	See Item 2.	See Item 2.
45	**NF-2310, "Material to be Impact Tested"**	See Item 6.	See Item 6.

Table 2.5-1 - ASME Code Requirements Compliance Summary (13 pages)

Item	ASME Code Requirement	Issue	Alternative Compliance Basis
46	**NF-2610, "Documentation and Maintenance of Quality System Programs:"** **"(a) Except as provided in (b) below. Material Manufacturers and Material Suppliers shall have a Quality System Program or an Identification and Verification Program, as applicable, which meets the requirements of NCA-3800 . . . ."**	See Item 15.	See Item 15.
47	**NF-3113, "Service Conditions:"** **"Each service condition to which the piping or component may be subjected shall be categorized in accordance with NCA-2142.2 and Service Limits [NCA-2142.4(b)] designated in the Design Specifications in such detail as will provide a complete basis for design in accordance with this Article."**	See Item 2.	See Item 2.
48	**NF-3132, "Stress Analysis:"** **"A detailed stress analysis or Design Report, as required by NCA-3550 for all piping or component supports, shall be prepared in sufficient detail to show that each of the stress limits of NF-3200 or NF-3300 is satisfied when the piping component support is subjected to the loadings of NF-3110."**	See Item 3.	See Item 3.
49	**NF-3220, "Design by Analysis for Class 1"**	See Item 3.	See Item 3.

Table 2.5-1 - ASME Code Requirements Compliance Summary (13 pages)

Item	ASME Code Requirement	Issue	Alternative Compliance Basis
50	**NF-4121, "Means of Certification:"** **"The Certificate Holder for an item shall certify, by application of the appropriate Code Symbol and completion of the appropriate Data Report in accordance with NCA-8000, that materials used comply with the requirements of NB-2000 and that the fabrication or installation complies with the requirements of NF-4000."**	The FuelSolutions™ SFMS will not use an ASME Code Symbol Stamp or a Data Report.	ASME Code Symbol Stamping or a Data Report is not typically required for components licensed under 10CFR72. Also see Item 15.
51	**NF-4213, "Qualification of Forming Processes for Impact Property Requirements"**	See Item 2.	See Item 2.
52	**NF-8000, "Nameplates, Stamping, and Reports"**	The FuelSolutions™ SFMS will not use ASME Code Symbol Stamping or a Data Report.	ASME Code Symbol Stamping or a Data Report is not typically required for components licensed under 10CFR72. Nameplate information will be provided on the FuelSolutions™ W21 Canister.

2.5.2 FuelSolutions™ Canister Top End Closure Weld Design Basis and Nondestructive Examination Justification

This FSAR section discusses the FuelSolutions™ canister top end closure design basis, including the justification for performing PT examination of the canister closure welds. The canister top end closure design and examination are in compliance with the guidance provided in NRC Interim Staff Guidance #4 (ISG-4).

2.5.2.1 Introduction

The NRC has recently raised concerns relative to top closure weld details and nondestructive examination (NDE) practices used in canisters for the storage of dry SNF assemblies. As required by 10CFR72 for independent SNF assembly and high-level radioactive waste storage systems, a "cask" must be designed to provide redundant sealing of confinement systems (10CFR72.236(c)) and be inspected to ascertain that there are no "cracks, pinholes, uncontrolled voids, or other defects" that could significantly reduce confinement effectiveness (10CFR72.236(j)). The current NRC concerns are based on recurring defects in Ventilated Storage Cask (VSC)-24 canister closure welds since 1995, as discussed in a recent NRC inspection report.[20]

The following presents a justification for the closure weld details and the associated NDE for the FuelSolutions™ canisters to be used to dry store SNF assemblies. The weld details and examination and testing practices described herein meet or exceed those for existing NRC-certified systems. They are based on related operating experience gained since the late 1980s and the resulting steady evolution in canister weld geometry and welding processes. This supplement also addresses technical issues raised by the VSC-24 closure weld details as they relate to a FuelSolutions™ canister.

2.5.2.2 NUREG-1536 Criteria

NUREG-1536[21] provides guidelines for use by the NRC staff in the preparation of safety reviews for dry cask storage systems. NUREG-1536 provides the following statements concerning canister closure details and inspection practices:

Section 3.0, "Structural Evaluation," paragraph V.1.b.ii, "Structural Design Features:"

> *"Review confinement boundary weld designs for compliance with the design code used for the confinement boundary. Acceptable requirements appear in ASME* (American Society of Mechanical Engineers) *Code* (Boiler and Pressure Vessel Code - BPVC) *Section III, Subsections NB-3352 and NC-3352, "Permissible Types of Welded Joints," and NB-4240 and NC-4240, "Requirements for Weld Joints in Components."*

[20] Inspection Report 72-1007/97-212, U.S. Nuclear Regulatory Commission, August 29, 1997.

[21] NUREG-1536, *Standard Review Plan for Dry Cask Storage Systems*, U.S. Nuclear Regulatory Commission, January 1997.

The NRC has previously accepted alternative confinement boundary weld designs (such as NB-5200 or NC-5200, typically for Category C welded joints). These acceptable alternatives achieve equivalent structural integrity, but do not meet all the provisions of NB-3352 or NC-3352 for full penetration welds, or do not meet the NDE requirements for full volumetric nondestructive examination. The NRC has also accepted alternative designs for the welds of the head or flat end plate to the cylindrical portion of the confinement vessel. However, the NRC has required the alternative designs to include redundant welds to provide redundant sealing of the confinement systems."

Section 7.0, "Confinement Evaluation," paragraph III.3, "Redundant Sealing:"

"The cask design must provide redundant sealing of the confinement boundary. (10 CFR 72.236(e))."

Section 7.0, paragraph V.2, "Confinement Monitoring Capabilities:"

"For redundant seal welded closures, ensure that the applicant has provided adequate justification that the seal welds have been sufficiently tested and inspected to ensure that the weld will behave similarly to the adjacent parent material of the cask. Any inert gas should not leak or diffuse through the weld and cask material in excess of the design leak rate."

Section 8.0, "Operating Procedures," paragraph V.1, "Welding and Sealing:"

"For seal-welded confinement cask closures, and to ensure ALARA, verify that the SAR specifies the use of a remotely operated welder to make seal welds of the confinement closures. Also verify that the procedures provide for acceptable non-destructive examination of these welds. In addition to leak testing discussed above, the NRC accepts dye penetrant tests on both the root and cover pass of the seal welds on the confinement cask closures (including inner closure; any closure over vent accesses for draining, evacuating, purging, and backfilling the cask interior; and the outer closure).

Verify that the SAR includes acceptable provisions for correction of weld defects and any additional drying and purging that may be necessary. Weld tests should be specified, and be in compliance with descriptions for those tests in the American Society of Mechanical Engineers (ASME) Boiler and Pressure Vessel Code (B&PV)."

Section 9.0, "Acceptance Tests and Maintenance Program," paragraph IV, "Acceptance Criteria:"

"In general, the acceptance tests and maintenance programs outlined in the SAR should cite appropriate authoritative codes and standards. The staff has previously accepted the following as the regulatory basis for the design, fabrication, inspection, and testing of DCSS components: . . ."

SYSTEM/COMPONENT	*ACCEPTABLE REGULATORY BASIS**
Confinement System	*American Society of Mechanical Engineers (ASME), "Boiler and Pressure Vessel (B&PV) Code," Section III, Subsection NB or NC.* *"American National Standard for Radioactive Materials— Leakage Tests on Packages for Shipment" (ANSI N14.5-1987).*
---	---
* *The SAR should clearly identify any exceptions to the listed codes and standards.*	

Section 9.0, paragraph V.1.a, "Visual and Nondestructive Inspections:"

"Confinement boundary welds and welds for components associated with redundant sealing, must meet the requirements of ASME Code, Section III, Article NB/NC-5200, "Required Examination of Welds." This section generally requires RT for volumetric examination and either PT or MT for surface examination. The ASME-approved specifications for RT, PT, and MT are detailed in ASME Code, Section V, Articles 2, 6, and 7, respectively.

For confinement welds that cannot be volumetrically examined using RT, the licensee may use 100-percent UT. The ASME-approved UT specifications are detailed in ASME Code, Section V, Article 5. Acceptance criteria should be defined in accordance with NB/NC-5330, "Ultrasonic Acceptance Standards." Cracks, lack of fusion, or incomplete penetration are unacceptable, regardless of length.

The NRC has accepted multiple surface examinations of welds, combined with helium leak tests for inspecting the final redundant seal welded closures."

Section 9.0, paragraph V.1.b, "Structural/Pressure Tests:"

"The confinement boundary (including that of the redundant seal) should be hydrostatically tested to 125 percent of the design pressure, in accordance with ASME Code, Section III, Article NB-6000. (Article NCA-2142.1, defines the design pressure as it applies to Level A Service Limits. As such, in determining the design pressure, the licensee should consider fission gas release from 1 percent of the fuel rods.) The test pressure should be maintained for a minimum of 10 minutes, after which a visual inspection should be performed to detect any leakage. All accessible welds should be inspected using PT. Any evidence of cracking or permanent deformation should constitute cause for rejection. SAR Section 9 should clearly specify the hydrostatic test pressure."

Section 9.0, paragraph V.1.c, "Leak Tests:"

> *"The licensee should perform leak tests on all boundaries relevant to confinement. These include the primary confinement boundary, the boundary of the redundant seal, and (if applicable) any additional boundaries used in the pressure monitoring system. For all-welded cask confinements, the NRC staff has, with adequate justification, considered it acceptable for licensees to omit leak testing of the second cask closure weld and the seal welds for the closure plates of the purge and vent valves. For such cases, leak testing must show that the inner closure weld meets the leakage limits."*

In addition to these requirements, NRC has issued ISG-4 regarding cask closure weld inspections. This guidance states that the "closure weld for the outer cover plate for austenitic stainless steel designs may be inspected using either volumetric or multiple pass dye penetrant techniques", subject to certain conditions.

As demonstrated in this section, the FuelSolutions™ canister closure weld design, NDE, and leak testing requirements are in complete compliance with NUREG-1536 and ISG-4. Any exceptions to the ASME Code requirements that are taken are consistent with NUREG-1536 and ISG-4.

2.5.2.3 Background

The FuelSolutions™ canister closure weld design, NDE, and leak testing requirements are based on operating experience gained since the late 1980s and the resulting steady evolution in canister weld geometry and welding process improvements. An Electric Power Research Institute (EPRI) report, NP-6941,[22] documents closure welding issues observed and solutions implemented during the Carolina Power & Light (CP&L)/DOE Cooperative Dry Storage Demonstration Project in the late 1980s. The purpose of this project was to performance test the handling/loading practices and heat transfer and shielding characteristics of the NUHOMS®-07P[23] SNF dry storage system. The system used an IF-300 transportation cask to transfer loaded Dry Shielded Canisters (DSCs) from the plant's fuel building to Horizontal Storage Modules (HSMs) within an ISFSI at the H. B. Robinson Nuclear Power Plant.

Figure 2.5-1 presents the general configuration of the original NUHOMS® DSC closure details. This original DSC design has an overall length to accommodate PWR fuel and a relatively thin cylindrical shell with thick lead shield plugs at its ends. The closure plate and canister shell are made from stainless steel, as are the top shield plug plates that encase a lead core. The absence of shielding along the cylindrical shell requires the canister to be placed inside a transfer or transportation cask during all fuel loading and handling outside the spent fuel pool.

Consequently, with the canister inside a cask, the location that can best accommodate a closure plate-to-shell weld and still permit the placement of the top shield plug following SNF assembly

---

[22] NP-6941, *NUHOMS® Modular Spent-Fuel Storage System: Performance Testing*, Electric Power Research Institute, September 1990.

[23] NUH-001, *Topical Report for the NUTECH Horizontal Modular Storage System for Irradiated Nuclear Fuel*, NUTECH Engineers, Inc., Revision 2A.

loading is a corner joint in-board of the canister shell flush with the end of the canister. This location poses inherent difficulties in using weld details that can be volumetrically examined reliably. Repositioning of the closure weld along the canister shell side-wall would result in substantially higher radiation exposure to the operators of this system and is not considered to be a desirable alternative. Thus, the original canister weld closure design incorporates the following features and requirements dating back to 1986[24] to meet the intent of an ASME Code, Class 1 pressure vessel:

- Volumetric examination of all full penetration canister shell seam welds.
- A "double closure" to assure confinement through the ends of the canister by requiring the welding of both the top shield plug and closure plates to the canister shell.
- Multi-level liquid penetrant (PT) examinations. These examinations include the final surface of the top shield plug-to-canister shell weld and the root pass and final surface of the closure plate-to-canister shell weld.
- Helium leak testing of the top shield plug-to-canister shell weld.
- No penetrations in the canister's outer confinement boundary that could lead to a leak path.

Until recently, this approach was judged to provide a "closure system" with safety margins equivalent to a single full penetration, volumetrically examined weld as discussed NUREG-1536 for SNF storage systems and the NRC SER[25] for the NUHOMS® system. The NRC NUHOMS® system SER states the following:

> "*The double seal welds at the top and bottom of the DSC do not comply with all the requirements for the ASME B&PV Code, Section III, Subsection NB. The inspection procedures outlined in the SAR do not comply with the Code; however, the NRC staff has determined that an exception to Code requirements for volumetric weld inspection is permissible due to the following:*
>
> 1. *The closure to the confinement boundary is a double-weld design, i.e., two weld joints provide confinement.*
> 2. *The gauge pressure (for normal operation) inside the DSC is on the order of 1 psig. Therefore, pressure stresses are very low.*
> 3. *The test method of ensuring a gas tight seal for the inner top seal weld is helium leak detection which is very sensitive. Also dye penetrant testing will be performed at two levels including the weld root pass and cover pass on the outer seal weld to ensure no weld surface imperfections. The test method of ensuring a gas tight seal for the bottom welds consists of a helium leak test by the fabricator for the inner seal weld in accordance with ASTM E499, in addition to two levels*

[24] *Safety Analysis Report for NUTECH Horizontal Modular System for Irradiated Fuel Topical Report*, U.S. Nuclear Regulatory Commission, March 28, 1986.

[25] *Safety Evaluation Report of VECTRA Technologies, Inc. (a.k.a. Pacific Nuclear Fuel Services, Inc.) Safety Analysis Report for the Standardized NUHOMS® Horizontal Modular Storage System for Irradiated Nuclear Fuel*, U.S. Nuclear Regulatory Commission, December 1994.

of dye penetrant testing for this weld. For the outer seal weld, a multi-level dye penetrant test is specified."

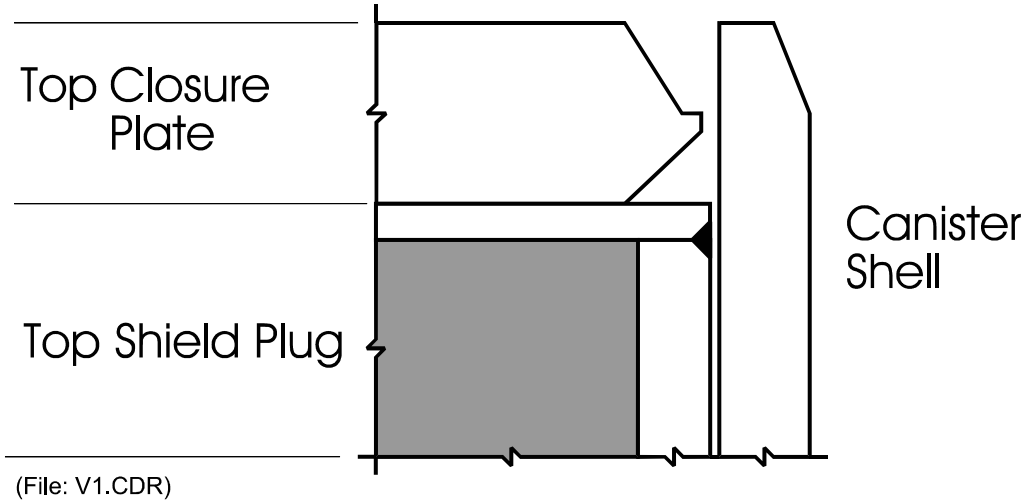

Figure 2.5-1 - Original Closure Configuration

(prior to closure welding)

After SNF assembly loading, placement of the top shield plug, and transfer of the canister within the cask from the spent fuel pool to the decontamination area, the shield plug-to-canister shell weld is placed (see Figure 2.5-2). The final surface of this weld is inspected using the PT examination technique and ASME Code, Class 1 pressure vessel original construction acceptance criteria. The DSC is then drained of water, vacuum dried, and inerted with helium gas. The shield plug-to-shell weld is then helium leak rate tested using techniques in accordance with American Society for Testing and Materials (ASTM) Standard E 499.[26] The closure plate is then installed and the root pass of the closure plate-to-canister shell weld is placed. Before the balance of this weld is completed, the root pass is inspected using the PT examination technique and ASME Code acceptance criteria. This same examination technique and acceptance criteria is then used to inspect the final surface of this weld.

[26] ASTM E 499, *Standard Test Methods for Leaks Using the Mass Spectrometer Leak Detector in the Detector Probe Mode,* American Society of Testing and Materials.

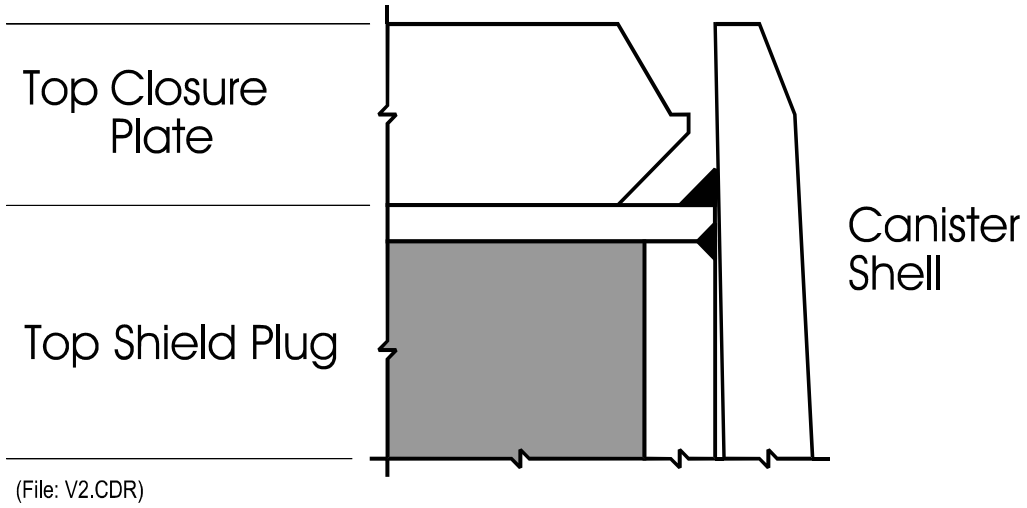

Figure 2.5-2 - Original Shield Plug-to-Canister Shell Weld Configuration

The canister closure weld described above was first implemented on a prototypical canister weld mock-up at the H. B. Robinson Nuclear Power Plant. EPRI Report No. NP-6941 provides the following discussion of welding issues observed during the CP&L/DOE demonstration project:

"Weld Mockups and Weld Improvement Program

Another license requirement was the performance of a weld mockup test on a "dummy" canister as well as the removal of the cover plate and lead plug to demonstrate the ability to retrieve fuel assemblies. The original design called for the lead plug to be fillet welded to the DSC and for a full penetration weld to be performed in welding the top cover plate to the DSC shell (see Figure 2.5-1). *Welding of the dummy canister began by welding the lead plug to the DSC shell. Although the welding process was successful, the DSC shell was drawn in during the welding, resulting in a tight fit for the cover plate to seat itself past the drawn-in portion of the DSC. Once past that point, the drawn-in shell* (actually the top cover weld preparation modified to clear the drawn-in shell inside diameter corner) *resulted in a larger-than-anticipated gap on the land area where the top cover plate would be welded to the DSC* (see Figure 2.5-2). *The welding procedure called for first tacking the cover plate in place before beginning the full penetration weld. The first tack was manually welded. When the second tack was made, the weld cracked. Two additional manual welds were attempted and both of them cracked as well. An automatic welder was brought in to try to control the heat during the tacking process, but these welds also cracked. At that point, the test was discontinued and the weld design and parameters were re-evaluated.*

Root causes of the cracked weld were thought to be:

1. *Too much shrinkage occurred during the welding of the lead plug; the top of the DSC had drawn in during welding. Consequently, when the top cover plate was being welded, the weakest place was the weld itself. When residual stresses in the weld needed relief, the tack weld was the location at which the stress was relieved.*
2. *The heat input was too high, resulting in excessive shrinkage.*
3. *The gap between the top cover plate and the DSC shell was too great.*

To resolve these concerns, a welding development program was begun that instituted welding of six additional mockup DSCs. Principal improvements made during this program were as follows:

1. *A change was made from a fillet weld to a bevel weld, which required chamfering of the lead plug, but resulted in much less weld metal being added to the DSC; thus, less shrinkage occurred* (see Figure 2.5-3).
2. *Using a high ferrite content weld metal, again resulted in less shrinkage.*
3. *Sequencing the welding pattern allowed more control over the heat input into the weld.*
4. *Reducing the gap between the cover plate and DSC shell resulted in reducing the amount of weld metal."*

The changing of the shield plug-to-shell weld from a fillet to a partial penetration detail permitted a reduction in the weld volume (i.e., shrinkage) a minimum of 30% (fillet vs. partial penetration weld throat widths), while maintaining the same weld strength.

The lessons learned during the CP&L/DOE demonstration project were incorporated into the NUHOMS®-24P[27] DSC design for the Oconee Nuclear Station, while maintaining the same inspection and testing requirements. This design continued to evolve with the incorporation of a chamfer at the inside diameter top corner of the shell (see Figure 2.5-4). This chamfer eliminated the need for any field reworking of the closure plate weld preparation to clear any draw-in of the canister shell caused by the top shield plug-to-canister shell weld.

[27] NUH-002, *Topical Report Amendment 2 for the NUTECH Horizontal Modular Storage System for Irradiated Nuclear Fuel - NUHOMS®-24P*, NUTECH Engineers, Inc., Revision 2A.

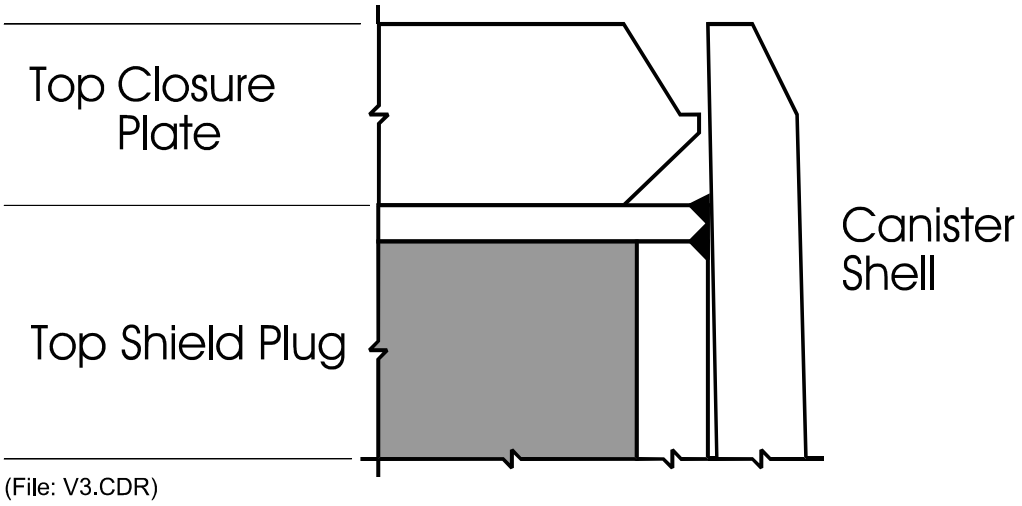

Figure 2.5-3 - Modified Canister Closure and Weld Configuration

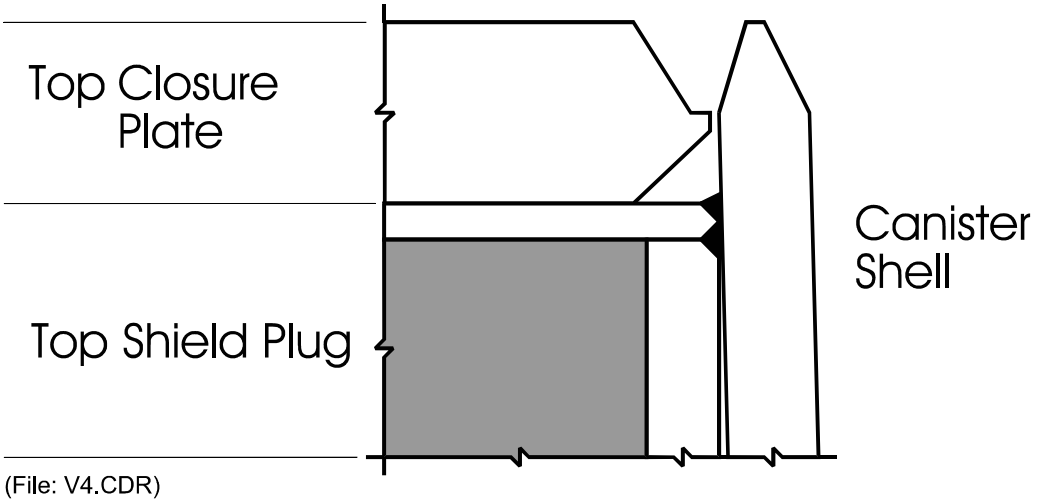

Figure 2.5-4 - Modified Canister Shell Chamfer

However, as the outside diameter of the top shield plugs were locally reduced to provide the required shield plug-to-canister shell gap during shop fabrication activities, the partial penetration weld joining the top and cylinder plates of the shield plug was also reduced (see Figure 2.5-5). In a few instances, this reduction in weld root size was large enough that trace amounts of the lead contained inside the shield plug appear to have remelted and caused

"wicking" of the lead into the shield plug-to-canister shell weld during canister closure welding operations. This lead contamination resulted in weld cracks that were discovered during PT examinations or helium leak rate testing and subsequently repaired. To prevent recurrence of this problem, the shield plug top plate-to-cylinder plate weld was relocated, as shown in Figure 2.5-6, for subsequent canisters successfully loaded at the Oconee and Calvert Cliffs plants over the past three to four years.

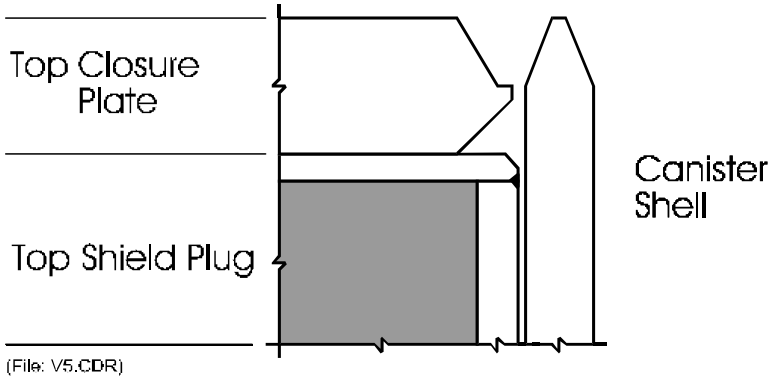

Figure 2.5-5 - Localized Reduction of Top Shield Plug Outside Diameter

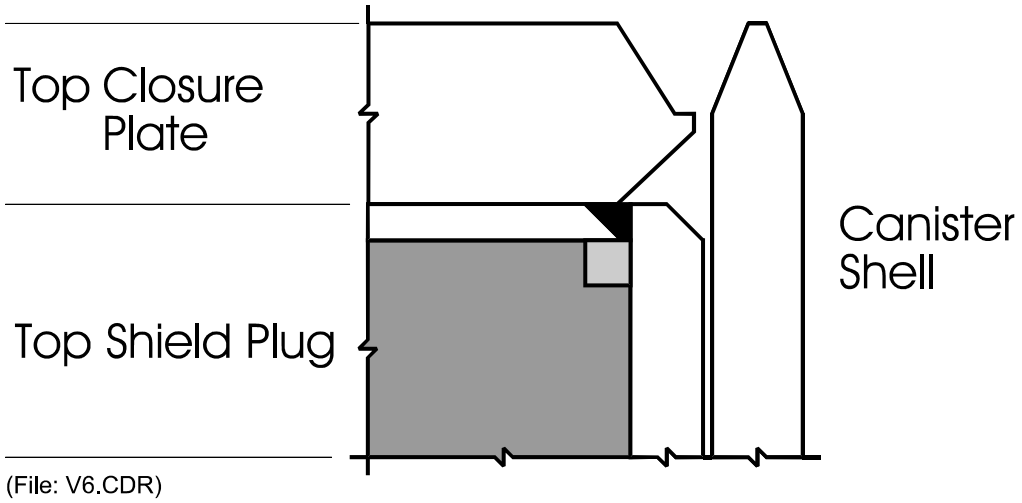

Figure 2.5-6 - Modified Top Shield Plug Design

Figure 2.5-7 presents the final enhancement in the current NUHOMS® DSC closure design,[28] while maintaining the same inspection and testing requirements as the original design. This design simplifies the fabrication process for the DSC closure by introducing an inner closure plate that is separate from the shield plug. This design permits the introduction of a shield plug-to-canister shell gap that is controlled by shielding and operating considerations and is independent of any weld gap requirements. Consequently, the new inner closure plate is fabricated to provide an optimum inner closure plate-to-canister shell weld gap that reduces welding shrinkage stresses and any draw-in of the canister shell (see Figure 2.5-8). This design was used to successfully load canisters at the Davis-Besse plant in late 1995/early 1996 and more recently at the Oconee Nuclear Station.

The closure design for these canisters has undergone a substantial evolution based on lessons learned and continuous improvement, with the goal of achieving optimum weld joint integrity and reliability. Unlike the VSC-24 design, no difficulties have been encountered in the placement or inspection of the current generation of canister closures. Consideration of any alternative or revised weld closure designs that have not undergone such an evolution, although they may be more amenable to volumetric examination, would not have the benefit of this operating experience and may be prone to unforeseen problems.

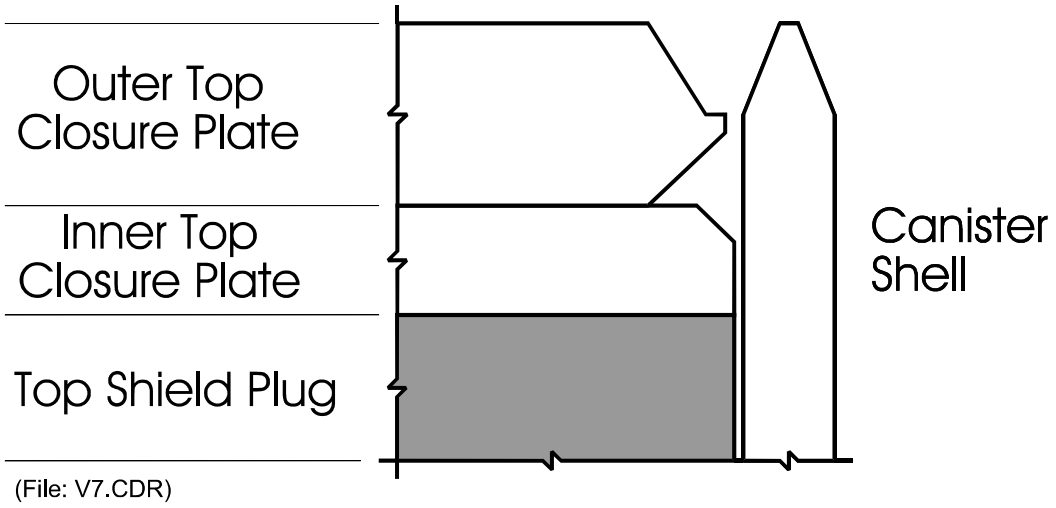

Figure 2.5-7 - Enhanced Canister Closure Design Configuration

[28] NUH-003, *Safety Analysis Report for the Standardized NUHOMS® Horizontal Modular Storage System for Irradiated Nuclear Fuel*, VECTRA Technologies, Inc.

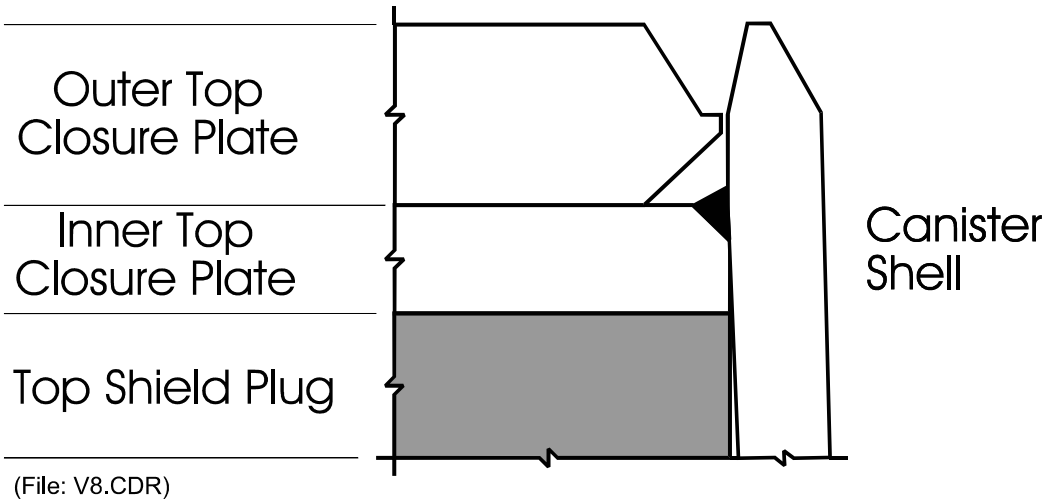

Figure 2.5-8 - Reduction of Shell "Draw-in"

2.5.2.4 FuelSolutions™ Closure Design Description

The closure design for the FuelSolutions™ canister builds on the experience gained on similar canister closure designs. As shown in Figure 2.5-9, the closure design for the FuelSolutions™ canister described in Section 1.2.1.3 of this FSAR is very similar to that shown in Figure 2.5-7. In addition, enhancements to the weld examination and leak testing requirements for this closure design have been incorporated, as discussed in Section 2.5.2.6.

The following design features have been incorporated into the FuelSolutions™ canister closure details based on the lessons learned and discussed above:

1. The shield plug is separate from the inner closure plate. This permits the fabrication of the shield plug to provide a gap based on operating and shielding considerations, as opposed to any weld gap requirements. This gap is larger than the inner top closure plate-to-shell weld gap, optimizing placement of the shield plug in the spent fuel pool after SNF assembly loading and assuring that the shield plug provides no inner top closure plate-to-shell welding shrinkage constraint.
2. Because the inner closure plate and shield plug are separate pieces, the fabrication of the inner closure plate provides an inner closure plate-to-shell weld gap that is optimized to provide the design partial penetration root depth and avoid welding shrinkage restraint, while minimizing the potential weld shrinkage volume.
3. The canister shell inside diameter top corner is chamfered to assure that the outer closure plate weld preparation will not need to be modified during canister SNF assembly loading operations. This assures that excessive outer closure plate-to-canister shell gaps are not created to provide clearance past any shell draw-in caused by shrinkage in the inner closure

plate-to-canister shell weld. By preventing these excessive gaps, tack and root pass welds will not crack due to excessive weld shrinkage. In addition, it facilitates welding torch access and orientation, and remote camera viewing by the AW/OS.

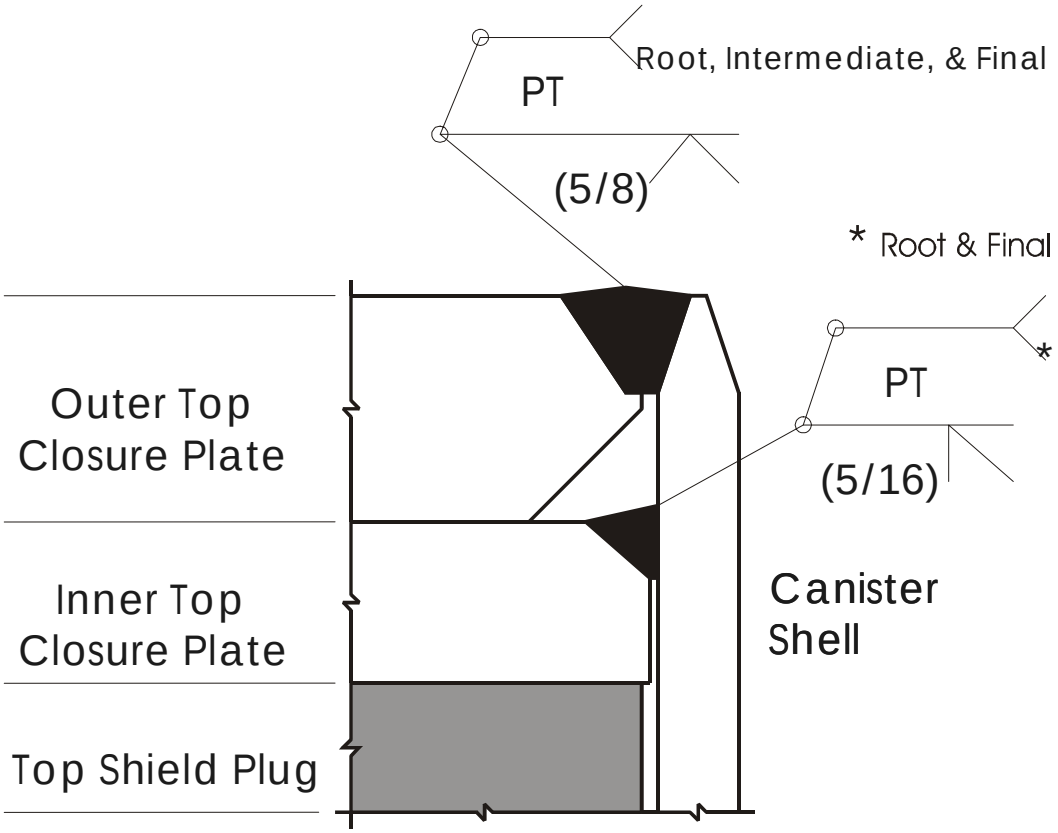

(File: V10r1.CDR)

Figure 2.5-9 - FuelSolutions™ Canister Closure Design

In addition to these top closure configuration details, all plate materials used in the fabrication of the FuelSolutions™ canister shell and inner and outer top and bottom closure plates are austenitic stainless steel, procured in accordance with the vessel requirements of ASME Code, Section III, Subsection NB. Paragraph NB-2530 requires the ultrasonic examination of 100% of at least one major surface of all plates for vessels using the straight beam technique. This inherent requirement of Subsection NB assures that there are no significant subsurface defects in the inner and outer top closure plates and the canister shell that could lead to weld and base metal defects or base material delaminations in a material that is inherently free of these types of defects.

In addition to the closure configuration details designed to minimize welding shrinkage stresses, all filler materials used in field closure welding of the FuelSolutions™ canisters shall be

stainless steel with a minimum ferrite content of 10 FN. As noted in the EPRI NP-6941 report, the use of "high" ferrite content weld metal results in less welding shrinkage and, therefore, shrinkage stress.

The long-term integrity of stainless steel materials in the design of a canister used for the dry storage of SNF assemblies is addressed in EPRI TR-102462.[29] This document addresses the following "specific aging phenomena:"

- Radiation effects
- Thermal aging
- Elevated temperature creep
- Low cycle fatigue.

EPRI TR-102462 concludes that there is little to no risk from the items listed above to the long-term integrity of SNF assembly dry-storage canisters fabricated from austenitic stainless steel.

The FuelSolutions™ canister design requires the following:

- PT examination of the final surface of the inner closure plate-to-shell weld and inner closure plate to vent and drain port body welds.
- PT examination of the root, intermediate, and final surface of the outer closure plate weld.
- Helium leak rate testing of the completed inner closure plate welds at an ASME Code pneumatic pressure test internal pressure using ASTM E 499 techniques.

Multi-level PT has historically been an acceptable substitute for volumetric examinations in difficult weld/component configurations and/or conditions and was successfully used to identify defects during the CP&L/DOE demonstration project and at Oconee and Calvert Cliffs. In addition, a helium leak rate test at a hydrostatic test pressure greatly exceeds the requirements of an ASME Code, Article NB-6000, pressure test based on the relative molecular size of the leakage medium. A similar combination of techniques and requirements satisfactorily verified that there were no significant defects in the top closure welds implemented during the loading of stainless steel canisters at the Robinson, Oconee, Calvert Cliffs, and Davis-Besse plants. The same methods can assure the long-term integrity of the FuelSolutions™ canisters in the future.

2.5.2.5 Comparison of FuelSolutions™ versus VSC-24 Canister Design Features

The FuelSolutions™ and VSC-24 canister closure design details differ in the following significant ways:

1. As shown in Figure 2.5-10, the VSC-24 permits a large gap between the top shield plug and the canister shell for ease in operations. This gap is so large that the insertion of shim plates is required prior to welding. These shims not only provide high welding shrinkage constraint, but significantly increase the weld volume. These two factors combine to set up a test of strengths between the top shield plug-to-canister shell weld and the canister shell through-wall tearing resistance potentially leading to defects in either or both materials.

[29] TR-102462, *Shipment of Spent Fuel in Storage Canisters*, Electric Power Research Institute, June 1993.

This welding shrinkage constraint and magnitude of weld shrinkage volume do not exist in the FuelSolutions™ canister closure design. As discussed in Section 2.5.2.4, the separation of the shield plug and inner closure plate permits optimization of the gaps between these components and the canister shell to minimize/prevent any welding shrinkage constraint and minimize weld shrinkage volume. In addition, the FuelSolutions™ canister uses a 5/8-inch canister shell thickness as opposed to a 1-inch shell thickness used by the VSC-24 design. This difference in shell thicknesses/stiffnesses provides additional welding shrinkage stress in the VSC-24 design not present in the FuelSolutions™ canister. Further, the ductile stainless steel material used for the FuelSolutions™ canister containment boundary is not susceptible to the laminar tearing or hydrogen-induced cracking experienced in the carbon steel VSC-24 canister.

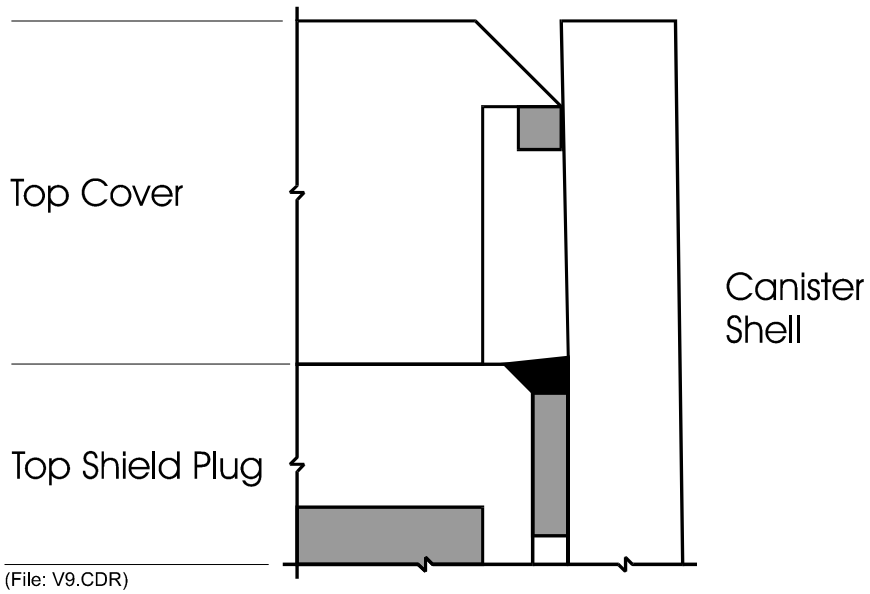

Figure 2.5-10 - VSC-24 Top Closure Configuration[30]

2. As discussed in the VSC FSAR,[30] the VSC-24 canister shell is made from SA-516,[31] Grade 70 carbon steel and is constructed in accordance with ASME Code, Section III, Subsection NC.[32] Unlike Subsection NB, Paragraph NC-2530 only requires that the plate be examined in accordance with its material specification. In the case of SA-516 materials,

[30] PSN-91-001, *Safety Analysis Report for the Ventilated Storage Cask System*, Pacific Sierra Nuclear Associates and Sierra Nuclear Corporation.

[31] ASME/ASTM SA-516/SA-516M, *Specification for Pressure Vessel Plates, Carbon Steel, for Moderate- and Lower-Temperature Service*.

[32] American Society of Mechanical Engineers (ASME) Boiler and Pressure Vessel Code, Section III, Division 1, Subsection NC, *Class 2 Components*, 1986 Edition with 1988 Addenda.

ultrasonic examination is a "supplementary requirement" that must be specified in a purchase order for this material. This examination requirement was not specified for the VSC-24 shell materials that exhibited the defects noted in the NRC inspection report 72-1007/97-212.

The FuelSolutions™ canister top closure design greatly eliminates any concern about potential canister shell delaminations. Stainless steel plate materials are inherently more ductile than carbon steel materials because they have been shown historically to be much less susceptible to subsurface delaminations and other defects than carbon steel materials. Consequently, stainless steel plate materials are more resistant ("tougher") to the propagation of defects than carbon steel plate materials. In addition, stainless steel is predicted to have better long-term integrity than carbon steel due to the potential lowering of fracture toughness caused by thermally induced strain aging and general corrosion in carbon and low-alloy steels over the design life of a canister.

In addition to these welding detail and material differences, the PT examination of carbon versus stainless steel canisters has resulted in very different observed defects. The PT examinations noted in NRC inspection report 72-1007/97-212 revealed indications that sometimes grew significantly in length and depth as they were excavated for repair in their carbon steel materials. This was not the experience for the defects observed during the CP&L/DOE demonstration project or at Oconee or Calvert Cliffs. In these cases, the defects were highly localized, as evidenced by relatively small repair excavations in the stainless steel materials employed in these projects.

2.5.2.6 Additional NDE and Testing Requirements

As the result of recurring defects in the VSC-24 canister top closure welds, additional NDE and leak testing requirements have been proposed by the NRC for the closure welds of the TranStor™ canisters. These proposed additional NDE and leak testing requirements include the following:

1. PT examination of successive deposited weld layers, each having a maximum thickness of 1/8-inch,[33] and/or
2. Ultrasonic (UT) examination of the outer top closure weld volume and weld-to-cover fusion zone using an angle beam technique and the weld-to-shell fusion zone using a straight beam technique.[34]

These proposed new NDE requirements have not been proven necessary for the closure design employed by the FuelSolutions™ canister discussed in Sections 2.5.2.3 and 2.5.2.4, especially in light of ALARA impacts associated with these requirements.

The PT examination specified for the FuelSolutions™ inner closure plate-to-canister shell root pass and final surface and combined pneumatic pressure/helium leak rate testing of the weld assures that there are no significant defects that could undermine the structural integrity of this

[33] Letter from the U.S. Nuclear Regulatory Commission to Sierra Nuclear, ACN 9705010064, Docket 7109268, Item 1-3, May 24, 1997.

[34] Letter from the U.S. Nuclear Regulatory Commission to Sierra Nuclear, ACN 9705010064, Docket 7109268, Item 7-1, May 24, 1997.

weld or any through-wall defects that could undermine the confinement integrity of this weld. The PT examination of the FuelSolutions™ outer closure plate-to-canister shell weld root, intermediate, and final surface assures that there are no significant defects that could undermine the structural integrity of this redundant weld.

UT examination is specified as an alternate inspection method for the FuelSolutions™ canister top end outer closure plate-to-shell weld. Assuming various geometric detail and material transmissibility difficulties associated with UT examination of stainless steel in general and the outer closure weld in particular can be overcome, manual UT methods probably do not add sufficient assurance of structural integrity to offset added examination personnel radiation exposure. Remotely operated UT examination methods could provide added assurance of structural integrity for the outer closure plate weld, while reducing examination personnel radiation exposure compared to manual UT methods. However, the geometry of the outer closure plate-to-canister shell weld still presents the following challenges in obtaining an acceptable UT examination:

1. As shown in Figure 2.5-11, the geometry of any weld with a throat depth less than the thickness of the outer closure plate will introduce indications/reflectors that will be very difficult, if not impossible, to evaluate during UT examinations. The nose of the outer closure plate J-bevel weld prep will make it difficult to detect and interpret angle beam UT indications at the root of the weld and the chamfered outer top corner of the canister shell will do the same relative to the canister shell weld fusion zone.
2. As shown in Figure 2.5-12, adding to the outside top chamfer and J-bevel nose geometry challenges for angle beam UT examination are additional geometric reflectors associated with a permissible 1/8-inch maximum offset of the outer closure plate with the canister shell.
3. As shown in Figure 2.5-13, the crown (reinforcement) of the outer closure plate-to-canister shell weld may require its surface to be ground or machined flush to assure coupling between the UT transducer and the closure plate/weld surface during straight beam UT examinations. As shown in Figure 2.5-14, this coupling problem can be eliminated by “flat topping” the weld at an ALARA cost to operating personnel. In addition, the outer closure plate’s chamfered lower corner (surface “a-b”) and the nose of the weld’s J-bevel will still confuse the detection and interpretation aspects of the UT examination process. These latter challenges will only be increased by the introduction of the permissible offset of the outer closure plate with the canister shell, as shown in Figure 2.5-15.
4. As shown in Figure 2.5-16 and Figure 2.5-17, it may be possible to insert angle and straight beam UT transducers between the outer surface of the canister and the inside surface of the cask top flange during “nominal” (1.25-inch gap) conditions (0.75- to 1.75-inch gap range). However, the canister shell’s outside chamfer, in combination with the weld prep J-bevel nose, will make UT detection and interpretation very difficult.

In addition to these geometry detail challenges, the ability to identify and size indications along the canister shell weld fusion zone from the top of the outer closure plate (see Figure 2.5-11 and Figure 2.5-12) or the outer closure plate weld fusion zone from the outside vertical face of the canister shell (see Figure 2.5-16 and Figure 2.5-17) will be difficult due to the inherent difficulty in the UT examination of stainless steel, which will be further complicated by differences in the base and weld metal grain structures. As demonstrated in various studies of the

effectiveness of the UT examination technique on IGSCC in stainless steel reactor piping system weldments, it is very difficult to identify and size indications through weld metal.

Therefore, remotely operated UT examination methods might be shown to be able to examine a predetermined ("design") throat depth of the outer top closure weld while ignoring any indications/reflectors below this design depth. This approach has been used in the application of weld overlay repairs on IGSCC-susceptible reactor piping system weldments as part of an ASME Code, Section XI[35] inservice repair, but has not previously been acceptable for an ASME Code, Section III (new) construction.

These issues will need to be addressed in developing a UT weld examination approach and acceptance criteria in order to implement this alternative inspection technique. The acceptance criteria will need to be based upon and compatible with the critical flaw size as determined in Section 3.9.5 of this FSAR.

2.5.2.7 Summary

The FuelSolutions™ canister closure weld design, NDE, and leak testing requirements comply with current licensing requirements in the following ways:

1. The closure detail involves a flat end plate-to-cylindrical shell alternate confinement boundary weld design found acceptable by NUREG-1536, Section 3.0, and the NRC SER, when used as part of a redundant weld sealing system.
2. The redundant confinement boundary weld sealing system also complies with the requirements of 10CFR72.236(e).
3. Helium leak rate testing of the completed inner closure plate weld to assure that this inert gas does not leak or diffuse through the weld or "cask" material in excess of the design leak rate complies with NUREG-1536, Section 7.0, confinement monitoring capabilities criteria.
4. Dye penetrant testing of the root and cover passes of the confinement closure welds meeting the requirements of ASME Code, Subsection NB, complies with NUREG-1536, Section 8.0, welding and sealing criteria.

[35] American Society of Mechanical Engineers (ASME) Boiler and Pressure Vessel Code, Section XI, *Rules for Inservice Inspection of Nuclear Power Plant Components*, 1995 Edition.

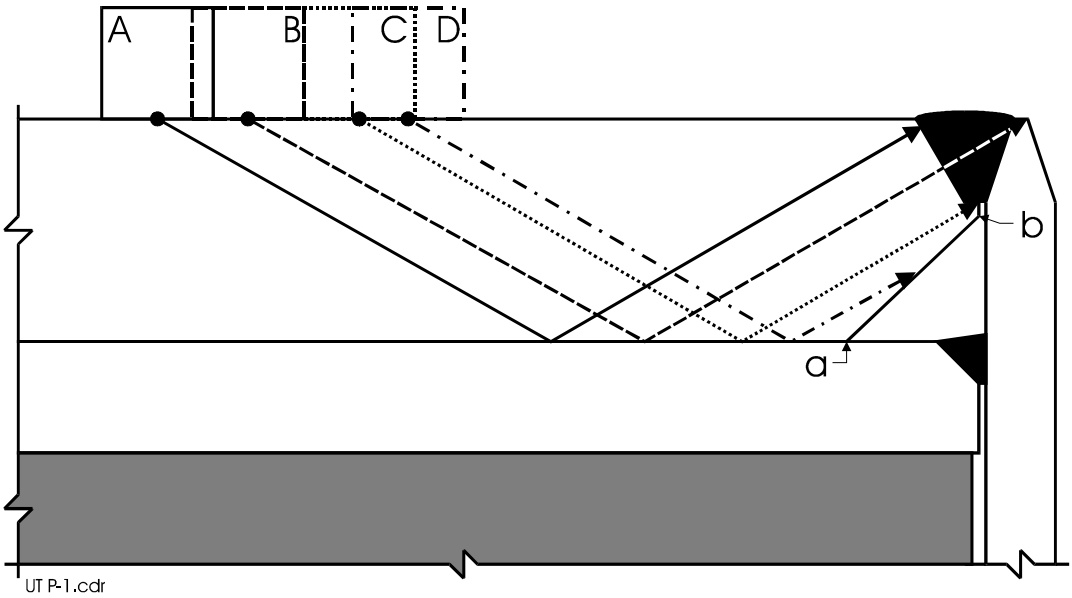

Figure 2.5-11 - Outside Shell Chamfer and J-Bevel Weld Prep Nose Challenges to Angle Beam UT Examination

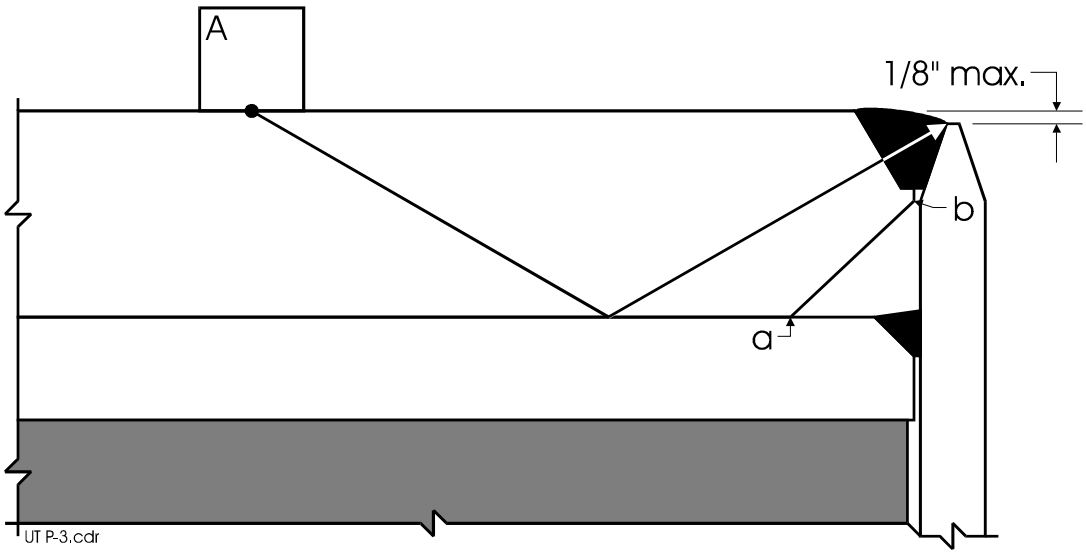

Figure 2.5-12 - Outer Closure Plate-to-Canister Shell Offset Challenge to Angle Beam UT Examination

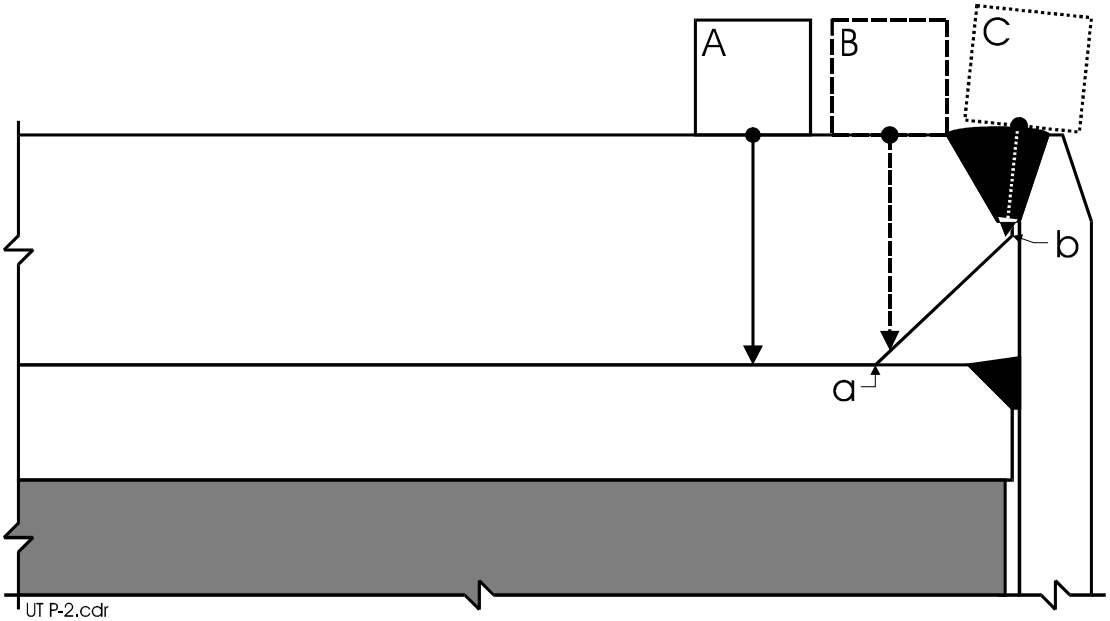

Figure 2.5-13 - Weld Crown (Reinforcement) Challenge to Straight Beam UT Examination

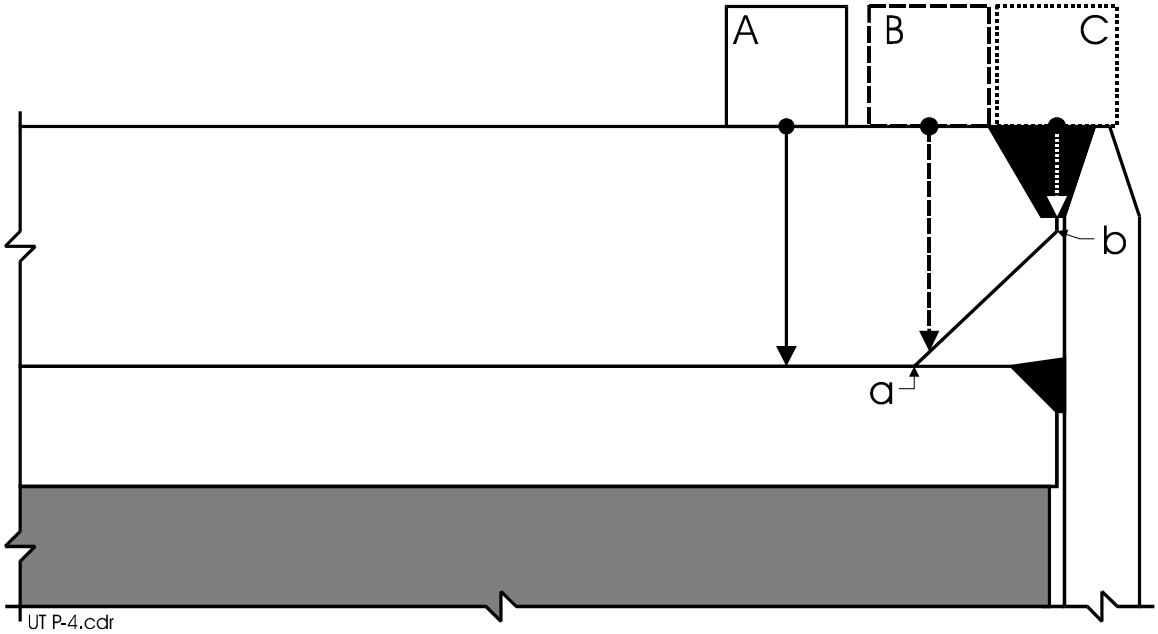

Figure 2.5-14 - Outer Closure Plate Lower Chamfer and J-Bevel Weld Prep Nose Challenges to Straight Beam UT Examination

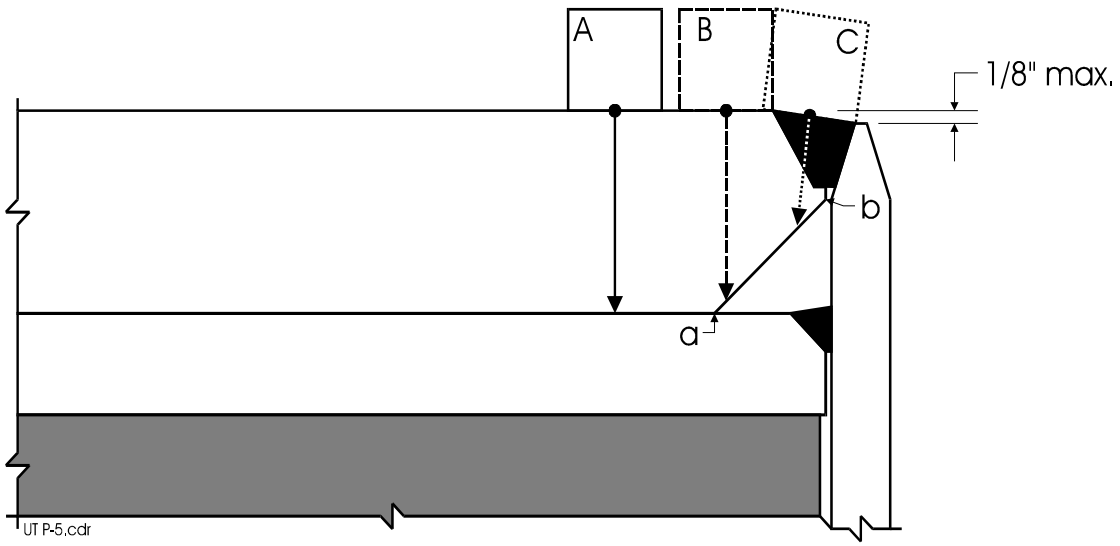

Figure 2.5-15 - Outer Closure Plate-to-Canister Shell Offset Challenge to Straight Beam UT Examination

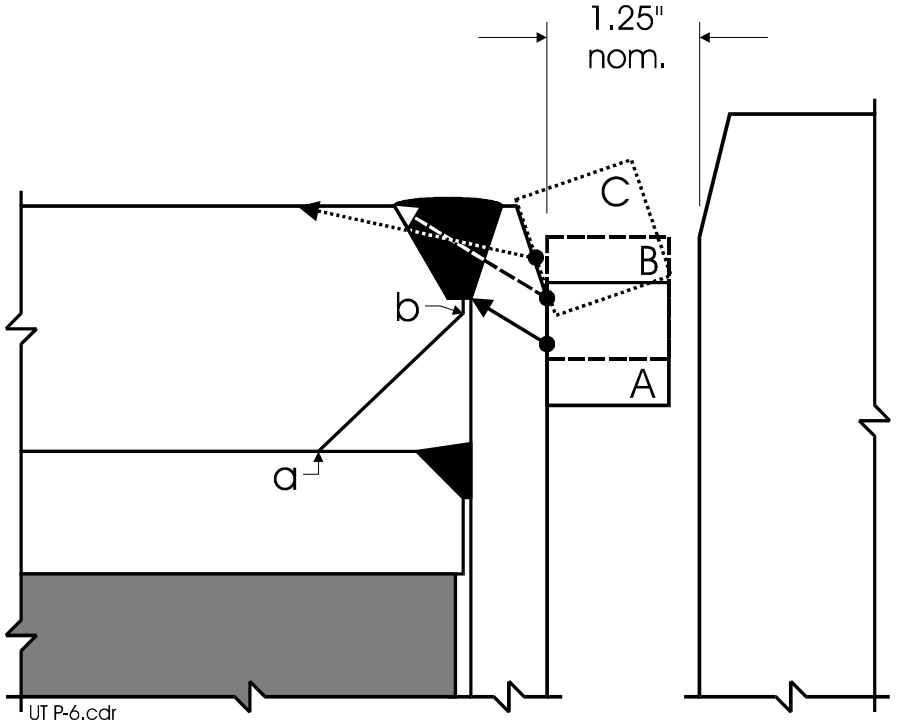

Figure 2.5-16 - Canister Shell Chamfer and J-Bevel Weld Prep Nose Challenges to Angle Beam UT Examination

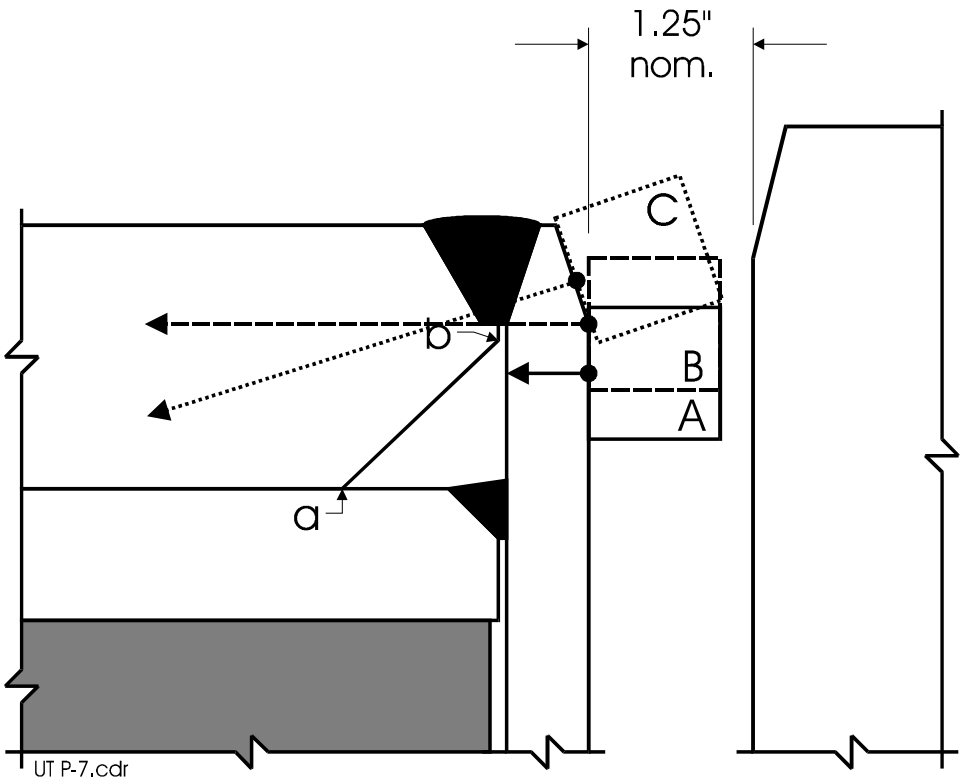

Figure 2.5-17 - Canister Shell Chamfer and J-Bevel Weld Prep Nose Challenges to Straight Beam UT Examination

5. The presentation of the FuelSolutions™ canister closure weld details and NDE requirements provided in this FSAR complies with the acceptance criteria reporting criteria of NUREG-1536, Section 9.0.
6. The use of multiple surface examinations of closure welds in combination with helium leak testing complies with NUREG-1536, Section 9.0, visual and NDE inspection criteria.
7. A combined helium leak rate test and ASME Code NB-6000 pressure test, using helium as the pressure test medium at a hydrostatic test pressure, meets the intent of the NUREG-1536, Section 9.0, structural/pressure test criteria.
8. The inability to leak test the outer top closure and vent/drain port cover welds is acknowledged as acceptable for an “all-welded cask” confinement in the NUREG-1536, Section 9.0, leak test criteria.
9. The use of multi-pass PT for examination of the outer closure of austenitic stainless steel canister designs has been found to be acceptable per NRC ISG-4.

Recent concerns raised during carbon steel canister top closure weld inspections do not offset the successful implementation of stainless steel top closure welds over the past ten years based on the following original NRC licensing commitments/requirements:

1. A "double closure" concept to assure confinement through the ends of the canister by requiring the welding of both the top shield plug and closure plate to the canister shell.
2. PT examinations including the final surface of the top shield plug-to-canister shell weld and the root pass and final surface of the closure plate-to-canister shell weld.
3. Helium leak testing of the top shield plug-to-canister shell weld.

The successful implementation of stainless steel closure welds has also been based on the following design details:

1. A separate inner closure plate and top shield plug that permits:
   a. The optimization of the top shield plug-to-canister shell gap relative to operating and shielding considerations, as opposed to weld fit-up gap considerations.
   b. The optimization of the inner closure plate-to-canister shell gap to provide the design partial penetration root depth, while avoiding excessive shrinkage restraint and minimizing weld shrinkage volume.
2. Chamfering of the canister shell inside diameter top corner to assure that the outer closure plate weld preparation will not need to be modified during canister SNF assembly loading operations. This will assure that excessive outer closure plate-to-canister shell gaps will not be created to avoid tack and root pass weld cracking due to excessive weld shrinkage.
3. The use of inherently tough stainless steel plate materials purchased to the requirements of ASME Code, Subsection NB vessel requirements.
4. The use of stainless steel filler materials with a minimum ferrite content of 10 FN in field closure welding of the FuelSolutions™ canisters to minimize welding shrinkage and, therefore, shrinkage stress.

All of the above licensing requirements and fundamental design details have resulted in a minimum of observed defects in stainless steel top closure welds and an ease in the repair of these defects due to their highly localized nature. The small quantity and size of these observed defects provides assurance that there are no significant defects in the top closure welds implemented during the loading of stainless steel canisters at the Robinson, Oconee, Calvert Cliffs, and Davis-Besse plants in the past, and assure the long-term integrity of these and new stainless steel canisters in the future.

This page intentionally left blank.

3. STRUCTURAL EVALUATION

This chapter presents the structural evaluation of the FuelSolutions™ W21 canister for normal operating conditions, off-normal operating conditions, and postulated accident conditions. Structural evaluations are performed for two classes of FuelSolutions™ W21 canisters including the 21M class canister and the 21T class canister. Within each canister class, there are four canister types. Each of the FuelSolutions™ W21 canister types are shown in general arrangement drawings provided in Section 1.5.1 and described in Section 1.2.1.3 of this FSAR.

The structural evaluations of the FuelSolutions™ W21 canisters are performed for the design basis normal, off-normal, and accident condition loadings defined in Section 2.3 of this FSAR using a combination of classical closed form solutions (hand calculations) and finite element analyses. The finite element analyses are performed using the ANSYS[1] general purpose finite element code. ANSYS is widely used in the nuclear industry and has been well benchmarked. The elements and features of ANSYS used in the structural analyses are limited to those that are well tested and proven to provide accurate results when properly used.

As discussed in Section 3.1.1, there are eight different W21 canister assembly configurations, all of which are similar in design. In order to limit the number of structural analyses, bounding structural evaluations are conservatively used to demonstrate the structural adequacy of the components of the different FuelSolutions™ canister classes and types. The bounding structural evaluations are performed for the most heavily loaded components and/or the lowest strength structural materials. The results of the bounding structural calculations are conservatively applied to those corresponding canister components that are shown to be bounded. Further discussion of the bounding canister shell and basket assembly analyses are provided in Sections 3.1.1.1 and 3.1.1.2, respectively.

The results of the structural analyses demonstrate that the W21 canisters maintain geometry for criticality control; provide confinement; and provide the ability to retrieve the SNF under all design basis loadings, as defined in Section 2.3 of this FSAR and in accordance with the requirements of 10CFR72.[2]

[1] ANSYS Inc., *ANSYS Finite Element Program*, Versions 5.2, 5.3, 5.4, and 5.5, Houston PA.

[2] Title 10, Code of Federal Regulations, Part 72 (10CFR72), *Licensing Requirements for the Independent Storage of Spent Nuclear Fuel and High-Level Radioactive Waste*, U. S. Nuclear Regulatory Commission, 1995.

This page intentionally left blank.

3.1 Structural Design

3.1.1 Discussion

The FuelSolutions™ Storage System consists of three principal structural components: the storage cask, the transfer cask, and the canister. A description of these component designs, including the FuelSolutions™ W21 canister, is provided in Section 1.2.1.3 of this FSAR. The FuelSolutions™ storage cask and transfer cask designs are described further in Section 1.2.1 of the FuelSolutions™ Storage System FSAR.[3] The principal structural members of the FuelSolutions™ W21 canister assembly are described in the following sections.

The FuelSolutions™ W21M and W21T canisters, which are designed for on-site storage in the FuelSolutions™ W150 Storage Cask and for off-site transport, are comprised of a shell assembly and a basket assembly. Figure 3.1-1 illustrates a typical W21 canister. The variations in W21M and W21T class canisters (e.g., materials and dimensions) are identified in Table 1.2-1. General arrangement drawings of the W21M and W21T class canisters are provided in Section 1.5.1 of this FSAR. The canister shell assembly is designed as the confinement boundary for on-site storage conditions, but it is not relied on for containment during transportation. The basket assembly, which is sealed inside the canister shell assembly cavity, maintains the positions of the spent fuel assemblies and neutron absorbing materials, thus providing criticality control for both storage and transportation conditions. The function of each of the W21 canister assembly components is summarized in Table 3.1-1. Storage conditions are evaluated herein. Transportation conditions are evaluated in a separate transportation license application.

3.1.1.1 Shell Assembly

The canister shell assembly consists of a right circular shell with redundant welded closure plates and a shield plug on the top end, and a bottom closure plate, shield plug, and a bottom end plate on the bottom end of the canister. The shell assembly confinement components (including the shell, top inner closure plate; top outer closure plate; bottom closure plate; vent and drain port bodies and covers; and the top outer closure plate leak test port cover, as shown in Figure 7.1-1) are fabricated from Type 316 stainless steel for the W21M class canisters and Type 304 stainless steel for the W21T class canisters. The licensee may also elect to use Type 304 stainless steel with a reduced carbon content for the W21T class canister on a site-specific basis. The shell assembly stainless steel material provides excellent corrosion protection and has minimum susceptibility to weld sensitization.

Each shell assembly contains a top and bottom shield plug. Depleted uranium (DU) or lead are used for the long cavity canister shield plugs, and carbon steel or lead for the short cavity canister shield plugs. The primary function of the top and bottom shield plugs is to provide axial radiation shielding. A comparison of the shield plug assembly materials and dimensions used in each canister configuration is provided in Table 1.2-2. The bottom shield plug is encased and structurally supported by the shell assembly bottom closure plate, cylindrical shell extension, and bottom end plate. The top DU or lead shield plugs are encased in stainless steel. The top

[3] WSNF-220, *FuelSolutions™ Storage System Final Safety Analysis Report*, NRC Docket Number 72-1026, BNG Fuel Solutions.

shield plug assembly casing steel consists of a bottom structural plate, and side and top casing plates. The principal function of the top shield plug assembly bottom structural plate is to provide structural support for the top shield plug under normal, off-normal, and accident conditions. The top carbon steel shield plugs are coated to provide corrosion protection.

The structural evaluation of the W21 canister shell assemblies are performed using a combination of finite element analyses and classical closed form solutions. The evaluations performed for the W21 canister shell assemblies for all normal, off-normal, and accident conditions and load combinations are summarized in Table 3.1-3 along with the analytical methods employed.

Bounding structural evaluations are performed for the most limiting FuelSolutions™ W21 canister shell assembly class and type. The bounding canister shell configurations used for the structural evaluation are determined based on comparisons of the W21 canister shell assemblies with common shield plug configurations. These comparisons, which are presented in Table 3.1-2, show that all W21T and W21M canister shell assembly designs, except for the W21T-LL, are similar with respect to the plate thickness and weld sizes used for the confinement components as well as the bottom end plate. These designs differ only in the top and bottom shield plug configurations. Consequently, bounding structural evaluations are performed for the similar W21 canister shells by combining the various features of the canister shells which result in the highest canister shell assembly stresses (e.g., the longest canister shell, weakest canister shell materials, heaviest top and bottom shield plugs, weakest shield plug designs, heaviest basket assembly and SNF assemblies, and the highest thermal gradients and internal pressure loading). The W21T-LL canister shell assembly is evaluated separately from all other W21 canister shell assemblies since its bottom end plate is 1.00-inch thick and is fabricated of SA-240, XM-19 austenitic stainless steel material.

The two bounding W21 canister shell assembly configurations identified above are evaluated for each storage and transfer load condition and load combination, referred to as the “bounding” and “W21T-LL” configurations. The results of the bounding canister shell assembly structural analyses demonstrate that all of the W21 canister shell assembly designs satisfy the applicable structural design criteria for on-site transfer and storage.

3.1.1.2 Basket Assembly

The FuelSolutions™ W21M and W21T canister basket assemblies are all similar in construction. Each basket assembly consists of a series of spacer plates, support rod assemblies, and poisoned guide tube assemblies. The guide tube assemblies provide lateral support for the fuel assemblies and maintain the position of the neutron absorbing material. The spacer plates maintain the relative spacing between guide tubes and provide structural support in the lateral direction for the basket assembly and SNF payload. The spacer plates are positioned and supported longitudinally by eight support rod assemblies. A comparison of the various basket assembly materials and dimensions is provided in Table 1.2-2 of this FSAR. The FuelSolutions™ W21M and W21T canister basket assembly designs are shown on the general arrangement drawings in Section 1.5.1 of this FSAR.

Each basket assembly contains two types of spacer plates. Type A spacer plates are captured by the support rod screw joints, and Type B spacer plates are positioned and held by the support sleeves (see Figure 3.1-2). With the exception of the support rod holes, the location and size of

all spacer plate cutouts are identical. The Type B spacer plate support rod holes are larger than those of the Type A spacer plates to allow the support rods to pass through the holes. The Type A support rod holes are smaller than the support rod diameter, such that these plates are clamped between the support rod segments. All W21 basket assemblies include six Type A spacer plates. The arrangement of the Type A spacer plates varies for the W21M and W21T basket assemblies. In the W21M basket assembly, each Type A spacer plate is fabricated from a single SA-240, Type XM-19 stainless steel plate. In the W21T basket assemblies, each Type A spacer plate, except for the bottom spacer plate, is replaced by an assembly of two electroless nickel coated SA-517 or A514, Grade P or Grade F carbon steel plates separated by washer plates. The W21T Type A spacer plate assembly has the same total thickness as the W21M Type A spacer plate. The number of Type B spacer plates used in each W21 basket assembly design differs depending on the maximum fuel weight accommodated. All long W21 canister basket assemblies (i.e., LD, LS, and LL) include 32 Type B spacer plates and all short W21 canister basket assemblies (i.e., SD, SS, and SL) include 30 Type B spacer plates. All type B spacer plates are fabricated from electroless nickel coated SA-517 or A514, Grade P or Grade F carbon steel.

Each basket assembly includes eight equally sized support rod assemblies that maintain the longitudinal spacing of the spacer plates and provide longitudinal support of the basket assembly. The support rod assemblies consist of support rod segments, which are threaded at each end, and support sleeves. Each of the support rod segments are screwed together, end-to-end, securing a Type A spacer plate at each joint. The support sleeves are positioned over the support rod segments to maintain the longitudinal positions of the Type B spacer plates within each span. The support rod assembly construction is shown in Figure 3.1-2. The lengths of the support rod segments and support sleeves are varied between basket designs to provide adequate structural support for the heaviest fuel types accommodated by each basket type. The primary difference between the W21M and W21T support rod assemblies is the materials of construction. The W21M support rods and support sleeves are fabricated from SA-479, Type XM-19 and SA-312, Type 304L stainless steels, respectively. W21T support rods and support sleeves are fabricated from SA-564, Grade 630 age-hardened stainless steel and SA-106, Grade C carbon steel, respectively.

Each guide tube assembly consists of an inner guide tube, four neutron absorber panels, and an outer wrapper. The guide tube materials and cross section dimensions are identical for all W21 basket assembly designs. Only the guide tube lengths are varied to fit within the cavities of each W21 canister shell assembly. The inner guide tube and outer wrapper are fabricated from Type 316 stainless steel. All of the W21 basket assemblies use a borated aluminum material as the fixed neutron absorber panels. The borated neutron absorber materials used in the basket assemblies are considered non-structural members, and are fully supported by the austenitic stainless steel guide tubes and wrapper assemblies for all postulated cask drop accident conditions. Each guide tube assembly is secured to the bottom end spacer plate with two attachment brackets which secure the guide tube within the basket assembly during fuel unloading operations and during normal and off-normal on-site storage and transfer conditions. However, the attachment brackets are designed to fail in shear in the event of a postulated storage cask end drop. A nominal 0.1-inch clearance is provided between the bottom end of the guide tubes and the bottom end of the support rods.

The structural evaluation of the W21 canister basket assemblies are performed using a combination of finite element analyses and classical closed form solutions. The evaluations performed for the basket assembly components for all normal, off-normal, and accident conditions and load combinations are summarized in Table 3.1-4 along with the analytical methods employed. The load conditions in which the basket component stresses are scaled from the stress results of other load conditions are identified and the scale factors are provided.

The FuelSolutions™ W21 basket assembly structural evaluation is performed for the most limiting basket assembly components, where possible. The bounding W21 basket assembly components for each normal load condition are identified in each of the following sections, and summarized as follows:

Bounding Spacer Plate Evaluations

As discussed above, two types of spacer plates are used for all W21 basket assemblies: 0.75-inch thick carbon steel and 2-inch thick stainless steel. Bounding structural evaluations are performed for only the most highly loaded W21 carbon steel and stainless steel spacer plates for each normal, off-normal, and accident load condition and load combination. The most highly loaded W21 spacer plates are identified based on the total in-plane tributary weight that each spacer plate supports. For the conditions in which the spacer plates are loaded by the weight of the SNF assemblies, two bounding fuel loading assumptions are considered: (1) Uniform fuel load, i.e., fuel weight evenly distributed over its entire length, and (2) Concentrated fuel loading at the fuel assembly grid spacers. Under relatively low magnitude loads, such as horizontal dead weight and on-site transport vibration, the SNF assembly loads are applied to the spacer plates as concentrated loads at the grid spacers. The fuel grid spacers are conservatively assumed to be located at the longitudinal positions which result in the highest spacer plate loading (i.e., directly above the carbon steel and stainless steel spacer plates having the largest tributary lengths). For the postulated storage cask tip-over and transfer cask side drop conditions, elastic stress and buckling evaluations are performed using the uniform fuel loading assumption. In addition, plastic stress and plastic instability evaluation are performed for these conditions using the concentrated fuel loading assumption.

For longitudinal loading, such as vertical deadweight, vertical handling, seismic, and postulated storage cask or transfer cask end drop conditions, with the exception of the bottom end spacer plate, each spacer plate only supports its own self-weight. The bottom end spacer plate supports the weight of all 21 guide tube assemblies in addition to its own weight since the guide tube assemblies are attached to the bottom end spacer plate with welded clip-angles. Therefore, a single representative carbon steel spacer plate, stainless steel spacer plate, and the bottom end spacer plate are evaluated for these conditions, and these results are applicable to all similar spacer plates.

The spacer plate thermal stress evaluation is performed for the carbon steel and stainless steel spacer plates subjected to the highest radial thermal gradients. The thermal stresses in these spacer plates bound those in all other spacer plates subjected to lower radial thermal gradients. The bounding radial thermal gradients used for the spacer plate thermal stress evaluation are calculated in Chapter 4 of this FSAR for the bounding design basis heat loads and axial heat profiles. Only the most limiting thermal conditions are evaluated. These thermal conditions are identified through comparisons of the resulting spacer plate radial thermal gradients.

Bounding Support Rod Evaluations

As discussed previously, each W21 basket assembly includes support rod assemblies, all having similar construction and identical cross section dimensions. The support rod assembly materials used for the W21M and W21T canisters are different. The W21T support rod materials are stronger than the materials used in the W21M.

For longitudinal loading, such as vertical deadweight, vertical handling, seismic, and postulated storage cask or transfer cask end drop conditions, each W21 support rod assembly supports its own self-weight plus the tributary weight of the spacer plates. Loading of the bottom end support rod segments also includes the weight of the guide tube assemblies, which are supported by the bottom spacer plate under dead weight conditions. The bounding support rod assembly design for these load conditions is that of the W21M-LD canister since its basket assembly is the heaviest, the support rod unsupported spans are the largest, and the material strengths are the lowest of all W21 support rods.

For lateral loads (i.e., normal to the basket longitudinal axis) resulting from horizontal deadweight, on-site transfer, seismic, and postulated storage cask and transfer cask side drops, the support rods are loaded by their own self-weight, and supported by the basket assembly spacer plates. The structural evaluations of the W21 support rods for these conditions are only performed for the largest unsupported support rod spans in each basket assembly.

Thermal stresses in the W21 support rods result from differential thermal expansion between the support rod, support sleeve, and spacer plate materials. Bounding thermal stress evaluations are performed for the hottest support rod spans in each of the W21M and W21T canister assemblies. Thermal stress evaluations are performed for the normal thermal and accident thermal conditions resulting in the highest support rod temperatures. The bounding W21 support rod normal and accident thermal stress evaluations are presented in Section 3.5.1.3.3 and Section 3.7.2, respectively.

Bounding Guide Tube Evaluations

As discussed above, the cross sectional dimensions and top and bottom end details of all W21 guide tube assemblies are identical. In addition, all W21 guide tubes are fabricated from the same material. The W21 guide tube designs vary only in overall length to accommodate the various W21 canister cavity lengths.

For lateral loads (i.e., normal to the basket longitudinal axis) resulting from horizontal deadweight, on-site transfer, seismic, and postulated storage cask and transfer cask side drops, the guide tubes are loaded by their own self-weight plus the weight of the fuel assembly, and supported by the basket assembly spacer plates. The structural evaluations of the W21 guide tubes for these conditions are performed only for the largest unsupported spans in each basket assembly. Both uniform fuel loading with the weight of the fuel assembly spread evenly along the length of the guide tube, and concentrated fuel loading at the locations of the fuel grid spacers on the fuel assemblies are evaluated. Limiting loads for the uniform load case are determined using the maximum guide tube free span length and maximum line load for each basket design. The concentrated fuel loading case uses the W21M-SD and W21T-SL designs which have the maximum fuel grid spacer tributary load, determined to be 256.9 pounds. Although other designs have slightly larger spacer plate spacing, the corresponding tributary loads are significantly lower, and thus are not bounding.

For longitudinal loading due to vertical deadweight, vertical handling, seismic, and postulated storage cask and transfer cask end drop conditions, the W21 guide tubes are loaded only by their own weight. Therefore, for the same vertical loading the bounding guide tubes are those in the W21M-LD canister since they are the longest, and consequently the heaviest.

3.1.2 Design Criteria

The principal design criteria for the W21 canister assembly are presented in Section 2.1 of this FSAR. This section discusses the general structural criteria used for the design of the canister shell and basket assemblies. In addition, the criteria used for other structural failure modes such as brittle fracture, fatigue, and buckling are discussed. The function and design code for each of the W21 canister assembly components is summarized in Table 3.1-1.

3.1.2.1 Basic Design Criteria

The FuelSolutions™ W21 canister assembly is designed such that no significant deformation results from normal or off-normal operation. High margins of safety are provided during these conditions. The structural design of the canister is also required to withstand all postulated accident conditions and natural phenomena events without impairing its ability to maintain confinement, radiation shielding, criticality control, and the ability to retrieve the stored fuel. Under accident conditions, permanent deformation of the canister is permitted provided the capability to perform the principal safety functions is not compromised.

3.1.2.2 Applicable Codes and Standards

The FuelSolutions™ W21 canister shell subassembly provides primary confinement for storage conditions. As such, the FuelSolutions™ W21 canister shell assembly confinement components are designed in accordance with the applicable requirements of Subsection NB of the ASME Code[4] and NRC Interim Staff Guidance #4 (ISG-4)[5] as discussed in Section 2.1.2 of this FSAR. The FuelSolutions™ W21 canister cylindrical shell seam welds are full penetration groove welds designed and RT inspected per Subsection NB. The FuelSolutions™ W21 shell assembly includes redundant confinement welds at the top end at the weld joints between the cylindrical shell, and the top inner and top outer closure plates. The weld details between the top inner and top outer closure plates, and the cylindrical shell are partial penetration groove welds. All canister top closure welds are liquid penetrant examined: the inner closure weld at the root and final weld passes, and the outer closure weld at the root, intermediate, and final weld passes. The full penetration weld between the bottom closure plate and the canister shell is examined by both liquid dye penetrant and radiographic examination. The canister shell extension and bottom end plate attachment welds are non-pressure retaining welds and are liquid dye penetrant examined.

The analytical stress acceptance criteria of Subsection NB of the ASME Code and ISG-4 are applied to the FuelSolutions™ W21 closure welds with additional conservative measures to assure that the design margins inherent in the NB rules are maintained. These measures include:

---

[4] American Society of Mechanical Engineers (ASME) Boiler and Pressure Vessel Code, *Rules for Construction of Nuclear Power Plant Components*, Section III, Division 1, Subsection NB, "Class 1 Components," 1995 Edition.

[5] ISG-4, *Cask Closure Weld Inspections*, Spent Fuel Project Office Interim Staff Guidance-4, United States Nuclear Regulatory Commission, Revision 1, May 21, 1999.

redundant closure welds at the top end of the FuelSolutions™ W21 shell assembly; full penetration welds at the bottom closure plate and canister seam welds with 100% radiographic examination; PT weld inspection of all closure welds; helium leak rate test of the top end inner closure welds; the bottom closure plate weld and canister seam welds; and pneumatic pressure test of the top end inner closure welds in accordance with NB-6000. These measures provide additional assurance of the FuelSolutions™ W21 canister closure integrity, and the weld redundancy assures that failure of any single confinement closure weld does not result in release of radioactive material to the environment. The allowable stresses for the canister shell assembly confinement components are summarized in Table 3.1-5.

In accordance with guidance provided by ISG-4, a weld efficiency factor of 0.8 is applied to the allowable stress for the canister shell top outer closure weld. Based on stress reduction factors provided in ASME Section III, a weld efficiency factor of 0.9 is applied to the allowable stress for the canister shell top inner closure weld.

The canister shell assembly components which do not provide confinement, including the shield plug assemblies, top shield plug support ring, bottom end shell extension, bottom end plate, and all associated welds, are designed in accordance with the allowable stress design criteria for plate and shell type structures of Section III, Subsection NF of the ASME Code The allowable stresses for the canister shell assembly non-confinement components are summarized in Table 3.1-6.

The criticality control components, consisting of the FuelSolutions™ W21 basket assembly components relied on to maintain the relative positions of the fissile and neutron absorbing materials (including the spacer plates, support rod assemblies, and guide tube assemblies), are designed in accordance with the applicable requirements of Section III, Subsection NG of the ASME Code as discussed in Section 2.1.2 of this FSAR. Use of these criteria also assures retrievability of the fuel assemblies for all postulated accident conditions in accordance with 10CFR72. The allowable stresses for the canister criticality control components are summarized in Table 3.1-5.

3.1.2.3 Supplemental Structural Criteria

Brittle Fracture

The FuelSolutions™ W21M and W21T canister shell and basket assemblies are designed using materials which provide degrees of safety against failure due to brittle fracture which are appropriate for the intended uses. The fracture toughness requirements used for the W21 canisters are based on a Lowest Service Temperature (LST) for all on-site storage and transfer conditions which produce significant dynamic tensile stress levels in the canister components. The results of the W21 canister structural evaluation show that the only conditions which produce significant dynamic stresses in the canister shell and basket assembly structural components are the cask drop and tip-over conditions which are postulated to occur during canister transfer and handling operations. A *technical specification* has been established in Section 12.3 of FuelSolutions™ Storage System FSAR which limits the minimum temperature of the transfer cask structural shell to 40°F during normal transfer operations when the ambient air temperature is below 32°F. This requirement also assures that the temperature of the canister will be at least 40°F during normal transfer operations. However, a conservative LST of 0°F is used to establish the fracture toughness requirements for the W21 canister assemblies.

The FuelSolutions™ W21 canister shell assembly confinement components are designed in accordance with the fracture toughness requirements of ASME NB-2300. The FuelSolutions™ W21 canister shell assembly confinement components are fabricated entirely from SA-240, Type 304 and Type 316 austenitic stainless steels. These materials do not undergo a ductile-to-brittle transition in the temperature range of interest (i.e., down to 0ºF), and thus are not susceptible to brittle fracture. Accordingly, impact testing is not required for austenitic stainless steels in accordance with ASME NB-2311(a)(6).

The W21 carbon steel shield plugs are designed in accordance with the fracture toughness requirements of ASME NF-2300. Per NF-2311(b)(7) impact testing is not required for materials for which the maximum stress does not exceed 6,000 psi tension or is compressive since brittle fracture failure under these conditions is not credible. As shown in the W21 canister shell structural evaluation, the maximum stress in the top and bottom carbon steel shield plugs is less than 6,000 psi for the storage cask bottom end drop, which is the controlling on-site storage and transfer load condition. Therefore, brittle fracture failure of the W21 canister carbon steel shield plugs is not a credible failure mode and impact testing of these materials is not required. The W21 DU and lead shield plugs are encased and supported by components fabricated entirely from austenitic stainless steels. These materials do not undergo a ductile-to-brittle transition in the temperature range of interest (i.e., down to 0ºF), and thus are not susceptible to brittle fracture. Accordingly, impact testing of the DU and lead casing plate materials in not required in accordance with NF-2311(b)(5).

The FuelSolutions™ W21 canister basket assembly is designed in accordance with the fracture toughness requirements of NG-2300, except that the impact testing requirements of NUREG/CR-1815[6] are used in lieu of NG-2330. Since the basket assembly components do not provide containment, the fracture toughness testing requirements from NUREG/CR-1815 for Category II steel are used. These requirements assure that the fracture toughness of the material is sufficient to prevent fracture initiation of pre-existing cracks under dynamic loading. The basket assembly structural components are fabricated from SA-240, Type 316 and SA-479, Type XM-19 austenitic stainless steels; SA-564, Grade 630 precipitation hardened steel; and SA-517, Grade P or F, or A514, Grade P or F, and SA-106, Grade C carbon steels. Austenitic stainless steel materials do not undergo a ductile-to-brittle transition in the temperature range of interest (i.e., down to 0ºF), and thus are not susceptible to brittle fracture. Accordingly, impact testing of austenitic stainless steels is not required per NG-2311(a)(5). Also, NG-2311(a)(4) does not require impact testing of pipe and tube sections with a nominal diameter of 6 inches and smaller. Therefore, impact testing of the W21T 3.50-inch diameter SA-106, Grade C carbon steel support sleeves is not required.

The W21M and W21T carbon steel spacer plate material (i.e., 0.75-inch thick SA-517, Grades F or P, or A514, Grades F or P carbon steel plate) and W21T support rod segment material (SA-564, Grade 630) both experience ductile-to-brittle transitions at a temperature lower than the NUREG/CR-1815 prescribed maximum NDT temperatures. Drop weight testing of these materials in accordance with ASTM E-208 will be performed to demonstrate that the NDT temperature is at or below the T_{NDT} test temperature. The T_{NDT} test temperatures for the carbon

[6] NUREG/CR-1815, *Recommendations for Protection Against Failure by Brittle Fracture in Ferritic Steel Shipping Containers Up to Four Inches Thick*, U.S. Nuclear Regulatory Commission, June 15, 1981.

steel spacer plate and support rod segment materials are established based upon the material thickness and the Lowest Service Temperature (LST) using Figure 7 of NUREG/CR-1815 as follows:

T_{NDT} = LST - A

= -10°F (0.75-inch thick spacer plates: SA-517 or A514, Grades F or P)

= -70°F (3.00-inch diameter support rod segment: SA-564, Grade 630)

= -75°F (3.50-inch diameter support rod end caps: SA-564, Grade 630)

where:

LST = 0°F, LST for all on-site storage and transfer conditions for which the cask drop and tip-over accidents are postulated to occur.

A = Offset temperature per Figure 7 (curve K_{ID}/σ_{yd}) of NUREG/CR-1815

= 10°F (0.75-inch thick spacer plates: SA-517 or A514, Grades F or P)

= 70°F (3.00-inch diameter support rod segment: SA-564, Grade 630)

= 75°F (3.50-inch diameter support rod end caps: SA-564, Grade 630)

The effects of irradiation on material toughness properties is considered in accordance with the requirements of ASME NG-2332(d). The evaluation is based on an exposure of 100 years, conservatively assuming no decay of the neutron source. The total neutron fluence (8.81E+14 n/cm^2 for E>1.0 MeV and 3.97E+15 n/cm^2 for E>0.1 MeV) results in 1.88E-06 dpa iron atom displacements. According to Figure 3-1 of NUREG-1509,[7] the entire neutron energy spectrum of 1.88E-06 dpa will not change the fracture toughness properties of SA-517 or A514 carbon steels.

Fatigue

The principal mechanism for fatigue damage to the FuelSolutions™ W21 canister is low amplitude high cycle fatigue due to normal ambient temperature and internal pressure cycling over the 100-year service life.[8] As discussed in Sections 3.5.1.4.1 and 3.5.1.4.2, the analyses of the FuelSolutions™ W21 canister shell assembly and basket assembly demonstrate that normal operating cycles do not present a fatigue concern for the W21 canister components over the 100-year service life.

Buckling

The stability of the FuelSolutions™ W21 canister shell is evaluated in accordance with ASME Code Case N-284.[9] The evaluation includes factors to account for geometric and loading

[7] NUREG-1509, *Radiation Effects on Reactor Vessel Supports*, Johnson, R. E., and Lipinski, R. E., U. S. Nuclear Regulatory Commission, May 1996.

[8] Title 10, Code of Federal Regulations, Part 51 (10CFR51), 7590-01, *Waste Confidence Decision Review*, U. S. Nuclear Regulatory Commission, September 11, 1990.

[9] Case N-284, *Metal Containment Shell Buckling Design Methods*, American Society of Mechanical Engineers (ASME) Boiler and Pressure Vessel Code, Code Cases, August 25, 1980.

eccentricities in the shell. The buckling evaluation of the canister shell for the storage cask end drop is presented in Section 3.7.3.1. The buckling evaluation due to external pressure is presented in Section 3.7.7.

The buckling criteria of NUREG/CR-6322 and Article F-1341.4(a) of the ASME Code are used for the basket assembly structural components. For the basket assembly buckling evaluations performed in accordance with NUREG/CR-6322, the basket components are considered linear type members subjected to axial compression and bending. The basket assembly component stresses are evaluated using interactions 26, 27, and 28 of NUREG/CR-6322. The only exception to this is for the guide tube buckling evaluation for the storage cask end drop, in which the guide tube stress is limited to 2/3 of the theoretical buckling stress calculated based on classical plate buckling theory in accordance with Section 5.3 of NUREG/CR-6322. For the W21 basket assembly spacer plate plastic instability analyses performed in accordance with Article F-1341.4(a) of the ASME Code, the maximum applied load is limited to $0.7P_I$, where P_I is the plastic instability load determined in accordance with Article NB-3213.24 of the ASME Code.

Table 3.1-1 - Summary of FuelSolutions™ W21 Canister Assembly Component Functions and Design Codes

Assembly	Component	Function	Codes & Standards
Shell Assembly	Cylindrical Shell	Confinement	NB
	Bottom End Plate	Structural	NF
	Bottom End Shell Extension	Structural	NF
	Bottom Shield Plug	Shielding	NF
	Bottom Closure Plate	Confinement	NB
	Top Outer Closure Plate	Confinement	NB
	Top Inner Closure Plate	Confinement	NB
	Top Shield Plug	Shielding	NF
	Top Shield Plug Casing	Structural	NF
	Top Shield Plug Support Ring	Structural	NF
Basket Assembly	Type A Spacer Plate	Criticality Safety	NG
	Type B Spacer Plate	Criticality Safety	NG
	Support Rod	Criticality Safety	NG
	Support Sleeve	Criticality Safety	NG
	Guide Tube	Criticality Safety	NG
	Neutron Absorber Panel	Criticality Safety	N/A
	Wrapper	Criticality Safety	NG
	Guide Tube Attachment Bracket	Criticality Safety	NG

Table 3.1-2 - Comparison of W21 Canister Shell Assembly Configurations

Canister Parameter	Canister Class and Type[1]							
	W21M-LS	**W21M-SS**	**W21T-LS**	**W21T-SS**	**W21M-LD**	**W21M-SD**	**W21T-SL**	**W21T-LL**
Shield Plug Material[2]	CS	CS	CS	CS	DU	DU/Pb[3]	Pb	Pb
Shell Material[4]	316	316	304	304	316	316	304	304
Max. Basket and Fuel Wt. (kips)	56.1	51.0	55.1	49.9	51.2	54.4	53.4[5]	50.1[6]
Maximum Canister Length (in.)	192.25	182.25	192.25	182.25	192.25	182.25	182.25	192.25
Bottom End Plate Thk. (in.)	1.75	1.75	1.75	1.75	1.75	1.75	1.75	1.00
Bottom Shield Plug Thk. (in.)	5.75	5.75	5.75	5.75	2.13	3.50[7]	3.13[7]	3.13
Bottom End Closure Thk. (in.)	1.00	1.00	1.00	1.00	1.00	1.00	1.00	1.00
Top Outer Closure Plate Thk. (in.)	2.0	2.0	2.0	2.0	2.0	2.0	2.0	2.0
Top Inner Closure Plate Thk. (in.)	1.0	1.0	1.0	1.0	1.0	1.0	1.0	1.0
Top Shield Plug Thk. (in.)	7.25	7.25	7.25	7.25	2.13	1.25	3.75	3.38
Top Shield Plug Bottom Plate Thk. (in.)	N/A	N/A	N/A	N/A	1.63	3.63	1.63	1.63

Notes:

(1) Bounding canister shell configurations for each grouping (shown with thick borders) are shown in ***Bold Italics***.

(2) Shield plug materials are designated as follows: CS=A36 Carbon Steel, DU=Depleted Uranium, Pb=A29 Chemical Copper Lead.

(3) The W21M-SD bottom shield plug consists of a 1.63-inch thick DU plug and a 1.88-inch thick lead plug.

(4) Shell materials are either SA-240, Type 316 (316); or SA-240, Type 304 (304) stainless steels.

(5) A bounding weight of 57 kips is used for the “bounding” canister shell contents (basket assembly and SNF assemblies).

(6) A bounding weight of 51 kips is used for the W21T-LL canister shell contents (basket assembly and SNF assemblies).

(7) A bounding lead thickness of 3.375 inches is conservatively used for the “bounding” canister shell structural evaluation.

Table 3.1-3 - W21 Canister Shell Assembly Structural Evaluation Summary (3 Pages)

Load Condition or Load Combination	Canister Shell Assembly Type or Component	Reference Section	Evaluation	Method of Analysis
Normal Thermal (T)	Bounding (including W21T-LL)	3.5.1.2.1	Differential Thermal Expansion	Evaluated in WSNF-220
	Bounding and W21T-LL(1)	3.5.1.3.1	Thermal Stress	Linear Elastic Finite Element Analysis
Fatigue	Typical W21 Canister Shell	3.5.1.4.1	Various	Hand Calculations
Canister Draining Internal Pressure (P_b)	Bounding and W21T-LL(1)	3.5.2.1	Stress	Linear Elastic Finite Element Analysis
Normal Internal Pressure (P)	Bounding and W21T-LL(1)	3.5.2.2	Stress	Linear Elastic Finite Element Analysis and Hand Calculations(2)
Vertical Dead Weight (D_v)	Bounding and W21T-LL(1)	3.5.3.1.1	Stress	Linear Elastic Finite Element Analysis and Hand Calculations(2)
Horizontal Dead Weight (D_h)	W21M-LS(3)	3.5.3.1.2	Stress	Linear Elastic Finite Element Analysis
Vertical Handling (L_{hv})	Bounding and W21T-LL(1)	3.5.4.1.1	Stress	Linear Elastic Finite Element Analysis and Hand Calculations(2)
Horizontal Handling (L_{hh1} and L_{hh2})	Bounding and W21T-LL(1)	3.5.4.2 & 3.5.4.3.1	Stress	Linear Elastic Finite Element Analysis and Hand Calculations(2)
Normal Load Combinations	Bounding and W21T-LL(1)	3.5.5.1	Stress	Linear Elastic Finite Element Analysis and Hand Calculations(2). Stresses from axisymmetric and three-dimensional models and hand calculations combined using hand calculations.

Notes: see page 3.1-15.

Table 3.1-3 - W21 Canister Shell Assembly Structural Evaluation Summary (3 Pages)

Load Condition or Load Combination	Canister Shell Assembly Type or Component	Reference Section	Evaluation	Method of Analysis
Off-Normal Temperature (T_o)	Bounding (including W21T-LL)	3.5.1.2.1	Differential Thermal Expansion	Evaluated in WSNF-220
	Bounding and W21T-LL(1)	3.6.1.3	Thermal Stress	Linear Elastic Finite Element Analysis
Off-Normal Internal Pressure (P_o)	Bounding and W21T-LL(1)	3.6.2	Stress	Linear Elastic Finite Element Analysis and Hand Calculations(2)
Reflood Internal Pressure (P_r)	Typical W21 canister shell	3.6.4	Stress	Linear Elastic Finite Element Analysis and Hand Calculations(2)
Cask Misalignment (L_m)	Bounding and W21T-LL(1)	3.6.3	Stress	Linear Elastic Finite Element Analysis and Hand Calculations(2)
Off-Normal Load Combinations	Bounding and W21T-LL(1)	3.6.6.1	Stress	Linear Elastic Finite Element Analysis and Hand Calculations(2). Stresses from axisymmetric and three-dimensional models and hand calculations(2) combined using hand calculations.
Storage Cask End Drop (A_s)	Bounding and W21T-LL(1)	3.7.3.1	Stress	Linear Elastic Finite Element Analysis and Hand Calculations(2)
	Top Inner Closure Plate and Weld	3.7.3.1	Stress	Hand Calculations
	CS Top Shield Plug	3.7.3.1	Stress	Hand Calculations
	Canister Shell	3.7.3.1	Buckling	Hand Calculation per Code Case N-284
Storage Cask Tip-over (A_{s1})	W21M-LS(3)	3.7.4.1	Stress	Linear Elastic Finite Element Analysis

Notes: see page 3.1-15.

Table 3.1-3 - W21 Canister Shell Assembly Structural Evaluation Summary (3 Pages)

Load Condition or Load Combination	Canister Shell Assembly Type or Component	Reference Section	Evaluation	Method of Analysis
Transfer Cask Side Drop (A_t)	W21M-LS[3]	3.7.5.1	Stress	Linear Elastic Finite Element Analysis
Flood (F)	All	3.7.7	Bounded by accident internal pressure	N/A
Earthquake (E)	All	3.7.8.1	Bounded by accident drops	N/A
Accident Internal Pressure (P_a)	Bounding and W21T-LL[1]	3.7.9	Stress	Linear Elastic Finite Element Analysis and Hand Calculations[2]
Accident Load Combinations	Bounding and W21T-LL[1]	3.7.10.1	Stress	Linear Elastic Finite Element Analysis and Hand Calculations. Stresses from axisymmetric and three-dimensional models and hand calculations combined using hand calculations.

Notes for Table 3.1-3:

(1) Separate analyses performed for the "bounding" canister shell configuration, which bounds all W21M and W21T canister shell designs except for the W21T-LL canister shell.

(2) Hand calculations are performed for the top outer closure plate in Section 3.9.2.2 for simply supported edge conditions to demonstrate that the bending stresses in the top outer closure weld can be classified as secondary. The maximum bending stress in the top outer closure plate for the simply supported condition are used for the stress evaluation since they bound those from the finite element analysis in which the top outer closure plate bending restraint is included.

(3) The W21M-LS canister assembly is the bounding design for these load conditions since it has the heaviest top shield plug and the heaviest basket assembly and fuel.

Table 3.1-4 - W21 Canister Basket Assembly Structural Evaluation Summary (4 Pages)

Load Condition or Load Combination	Basket Assembly Component	Reference Section	Evaluation	Method of Analysis
Normal Thermal (T)	Spacer Plates, Support Rods, and Guide Tubes	3.5.1.2.2	Differential Thermal Expansion	Hand Calculations
	Spacer Plates	3.5.1.3.2	Thermal Stress(1)	Linear Elastic FEA
	Support Rods and Sleeves	3.5.1.3.3	Thermal Stress(2)	Hand Calculations
	Guide Tubes	3.5.1.3.4	N/A	Free Thermal Expansion
Fatigue	Entire Assembly	3.5.1.4.2	Various	Hand Calculations
Vertical Dead Weight (D_v)	Spacer Plates	3.5.3.3.1	Stress	Linear Elastic FEA
	Support Rod Segment	3.5.3.2.1	Stress	Scaled from A_s (x 1*g*/20*g*)
	Support Sleeve	3.5.3.2.1	Stress	Scaled from A_s (x 1*g*/50*g*)
	Guide Tubes	3.5.3.4.1	Stress(3)	Hand Calculations
Horizontal Dead Weight (D_h)	Spacer Plates	3.5.3.3.2	Stress(4)	Linear Elastic FEA
	Support Rod Assy.	3.5.3.2.2	Stress	Scaled from A_t (x 1*g*/60*g*)
	Guide Tubes	3.5.3.4.2	Stress(5)	Linear Elastic FEA
Vertical Handling (L_v)	Spacer Plates	3.5.4.1.2	Stress	Scaled from D_v (x 1.15)
	Support Rod Assy.	3.5.4.1.2	Stress	Scaled from D_v (x 1.15)
	Guide Tubes	3.5.4.1.2	Stress	Scaled from D_v (x 1.15)
Horizontal Handling (L_{hh1} and L_{hh2})	Spacer Plates	3.5.4.3.2	Stress	Scaled from D_v (x 0.3) and D_h (x 2.0)
	Support Rod Assy.	3.5.4.3.3	Stress	Scaled from D_v (x 0.3) and D_h (x 1.61)
	Guide Tubes	3.5.4.3.4	Stress	Scaled from D_v (x 0.3) and D_h (x 2.0)

Notes: see page 3.1-19

Table 3.1-4 - W21 Canister Basket Assembly Structural Evaluation Summary (4 Pages)

Load Condition or Load Combination	Basket Assembly Component	Reference Section	Evaluation	Method of Analysis
Normal Load Combinations[6] (A4 & A5)	Spacer Plates	3.5.5.2	Stress	Absolute sum of maximum stresses
	Support Rods and Sleeves	3.5.5.2	Stress	Absolute sum of maximum stresses
	Support Sleeves	3.5.5.2	Elastic Buckling	In accordance with NUREG/CR-6322
	Guide Tubes	3.5.5.2	Stress	Absolute sum of maximum stresses
Off-Normal Thermal (T_o)	All Structural Components	3.6.1.3.2	Thermal Stress	Hand Calculations
Accident Thermal (T_a)	Spacer Plates	3.7.1/3.7.2	N/A[7]	N/A[7]
	Support Rods and Sleeves	3.7.2	Elastic Buckling	In accordance with NUREG/CR-6322
	Guide Tubes	3.7.1/3.7.2	N/A[7]	N/A[7]
Storage Cask End Drop (A_s)	Spacer Plates	3.7.3.2.1	Stress	Scaled from D_v (x 50)
	Support Rod Assy.	3.7.3.2.2	Support Rod & Sleeve Stresses	Hand Calculation - Elastic Analysis
			Support Rod & Sleeve Buckling	In accordance with NUREG/CR-6322
	Guide Tubes	3.7.3.2.3	Stress	Hand Calculation
			Buckling	In accordance with NUREG/CR-6322
Storage Cask Tip-over (A_{s1})	Spacer Plates	3.7.4.2.1	Stresses[8]	Linear Elastic FEA
			Permanent Deformation[4]	Plastic FEA
			Elastic Buckling[8][9]	In accordance with NUREG/CR-6322
			Plastic Instability[10]	Plastic Large-Deflection FEA
	Support Rod Assy.	3.7.4.2.2	N/A	Bounded by A_t
	Guide Tubes	3.7.4.2.2	N/A	Bounded by A_t

Notes: see page 3.1-19

Table 3.1-4 - W21 Canister Basket Assembly Structural Evaluation Summary (4 Pages)

Load Condition or Load Combination	Basket Assembly Component	Reference Section	Evaluation	Method of Analysis
Transfer Cask Side Drop (A_t)	Spacer Plates	3.7.5.2.1	Stresses[8]	Linear Elastic FEA
			Permanent Deformation[4]	Plastic FEA
			Elastic Buckling[8][9]	In accordance with NUREG/CR-6322
			Plastic Instability[10]	Plastic Large-Deflection FEA
	Support Rod Assy.	3.7.5.2.2	Stresses	Hand Calculations
	Guide Tubes	3.7.5.2.3	Stresses[8]	Linear Elastic FEA
			Permanent Deformation[11]	Linear Elastic and Plastic Large-Deflection FEA
			Elastic Buckling	In accordance with NUREG/CR-6322
Earthquake (E)	Spacer Plates	3.7.8.2	Stress	Scaled from D_v (x 1.1) and D_h (x 1.3)
	Support Rod Assy.	3.7.8.2	Stress	Scaled from D_v (x 1.1) and D_h (x 1.3)
	Guide Tubes	3.7.8.2	Stress	Scaled from D_v (x 1.1) and D_h (x 1.3)
Accident Load Combinations	Spacer Plates	3.7.10.2	Stress	Absolute Sum of Maximum Stresses[12]
			Elastic Buckling[8][9]	In accordance with NUREG/CR-6322
	Support Rods	3.7.10.2	Stress	Absolute Sum of Maximum Stresses
	Guide Tubes	3.7.10.2	Stress	Absolute Sum of Maximum Stresses
			Elastic Buckling	In accordance with NUREG/CR-6322

Notes: see page 3.1-19

Notes for Table 3.1-4:

(1) Separate analyses performed for hottest carbon steel and stainless steel spacer plates for controlling normal thermal conditions.

(2) Support rod and sleeve stresses calculated for hottest support rod span in each W21M and W21T canister types.

(3) Bounding stresses calculated for guide tube and guide tube attachments for heaviest W21 guide tube assembly.

(4) Analyses performed for most highly loaded W21 carbon steel and stainless steel spacer plates assuming concentrated loads at SNF assembly grid spacers.

(5) Stresses evaluated in the guide tube base material and longitudinal seam weld for both uniform SNF loading assumption and concentrated fuel load at SNF grid spacers. Uniform loading analyzed by scaling from A_t ($1g$ / $60g$).

(6) Off-Normal load combinations are identical to Normal Conditions

(7) Thermal stresses are classified as secondary and do not require evaluation for accident conditions.

(8) Evaluated using elastic system analysis with uniform fuel load assumption.

(9) Evaluated for impact loads with and without controlling normal thermal loading superimposed.

(10) Analyses performed for most highly loaded carbon steel spacer plate only.

(11) Permanent deformation evaluated in the guide tube for both uniform SNF loading assumption and concentrated fuel load at SNF grid spacers.

(12) Thermal stresses are classified as secondary and as such are not evaluated for accident conditions. However, thermal loads are considered in combination with other accident loads only for buckling evaluation.

Table 3.1-5 - Canister Confinement and Criticality Safety Component Allowable Stresses

Component Type	Stress Category	Stress Acceptance Criteria			
		Normal Conditions (Service Level A)	Off-Normal Conditions (Service Level B)	Off-Normal Conditions (Service Level C)	Accident Conditions (Service Level D)
Confinement Components[1] (Subsection NB)	P_m	S_m	$1.1S_m$	Greater of $1.2S_m$ or S_y	Lesser of $2.4S_m$ or $0.7S_u$
	$P_m + P_b$	$1.5S_m$	$1.65S_m$	Greater of $1.8S_m$ or $1.5S_y$	150% of P_m allowable
	$P_m + P_b + Q$	$3.0S_m$	$3.3S_m$	N/A	N/A
	Ave. Bearing Stress	S_y	S_y	S_y	$2.1S_u$[2]
	Pure Shear Stress	$0.6S_m$	$0.6S_m$	$0.6S_m$	$0.42S_u$
Criticality Safety Components (Subsection NG)	P_m	S_m	$1.1S_m$	$1.5S_m$	Elastic: Lesser of $2.4S_m$ or $0.7S_u$ Plastic: $0.7S_u$
	$P_m + P_b$	$1.5S_m$	$1.65S_m$	$2.25S_m$	Elastic: 150% of P_m allowable, Plastic: $0.9S_u$
	$P_m + P_b + Q$	$3.0S_m$	$3.3S_m$	N/A	N/A
	Avg. Bearing Stress	S_y	S_y	$1.5S_y$	Lesser of $2S_y$[3] or $2.1S_u$[2]
	Avg. Shear Stress	$0.6S_m$	$0.6S_m$	$0.9S_m$	Lesser of $1.2S_m$[3] or $0.42S_u$

Notes:

(1) Including canister shell assembly confinement welds.

(2) Applicable only for pinned or bolted joints for Service Level D.

(3) In accordance with NG-3225, special stress limits for Service Level D conditions are limited to twice the allowable stress for Service Level A and Level B conditions.

Table 3.1-6 - Canister Shell Assembly Non-Confinement Component Allowable Stresses

Component Type	Stress Category	Stress Acceptance Criteria			
		Normal Conditions (Service Level A)	Off-Normal Conditions (Service Level B)	Off-Normal Conditions (Service Level C)	Accident Conditions (Service Level D)
Canister Shell Assembly Non-Confinement Components (Subsection NF)	P_m	S_m	$1.33S_m$	$1.5S_m$	Greater of 1.5 S_m or 1.2 S_y, not to exceed $0.7S_u$
	$P_m + P_b$	$1.5S_m$	$2.0S_m$	$2.25S_m$	150% of P_m Allowable
	Avg. Bearing Stress	S_y	S_y	S_y	N/A
	Pure Shear Stress	$0.6S_m$	$0.6S_m$	$0.6S_m$	$0.42S_u$

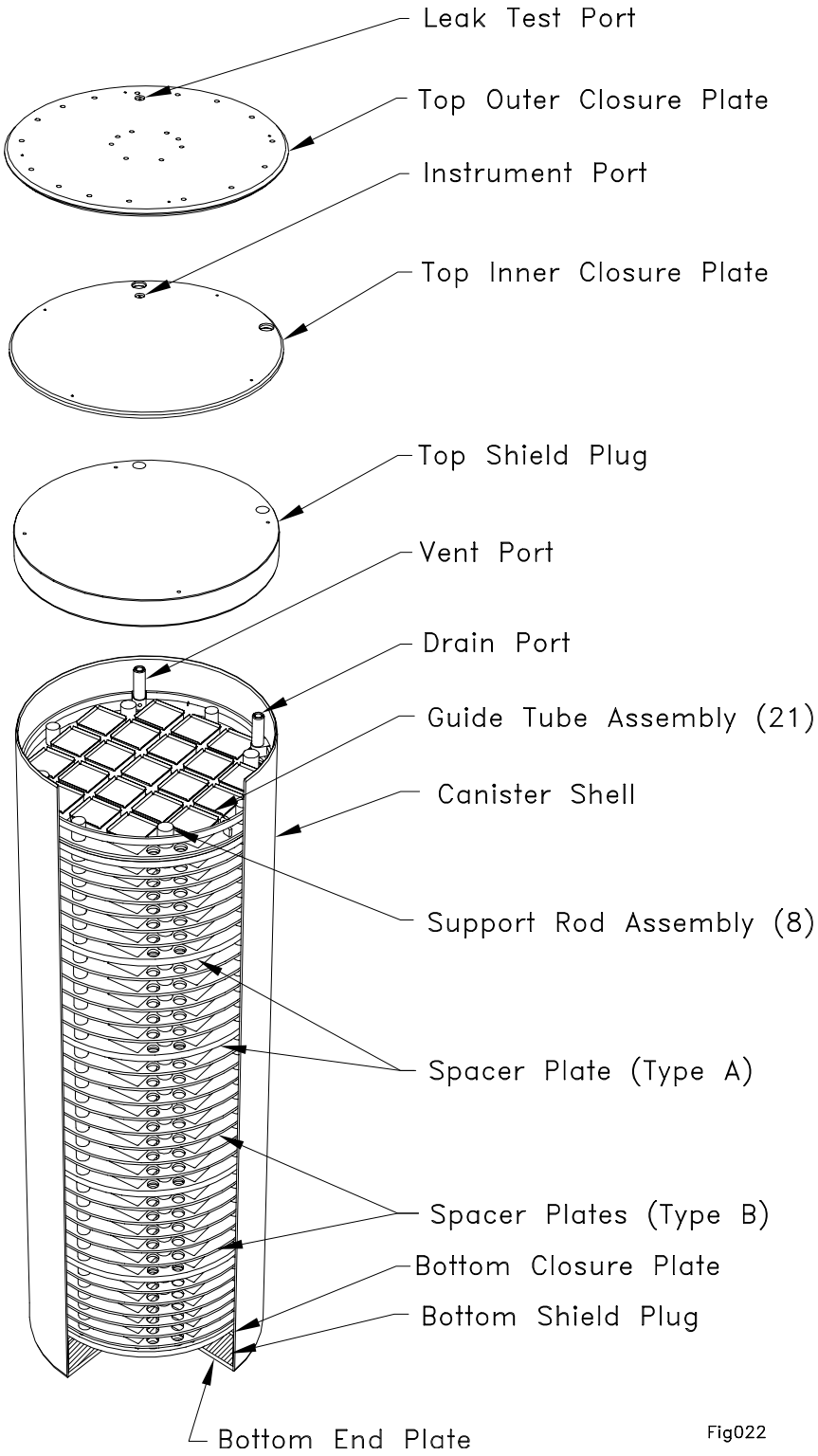

Figure 3.1-1 - Expanded View of Typical FuelSolutions™ W21 Canister

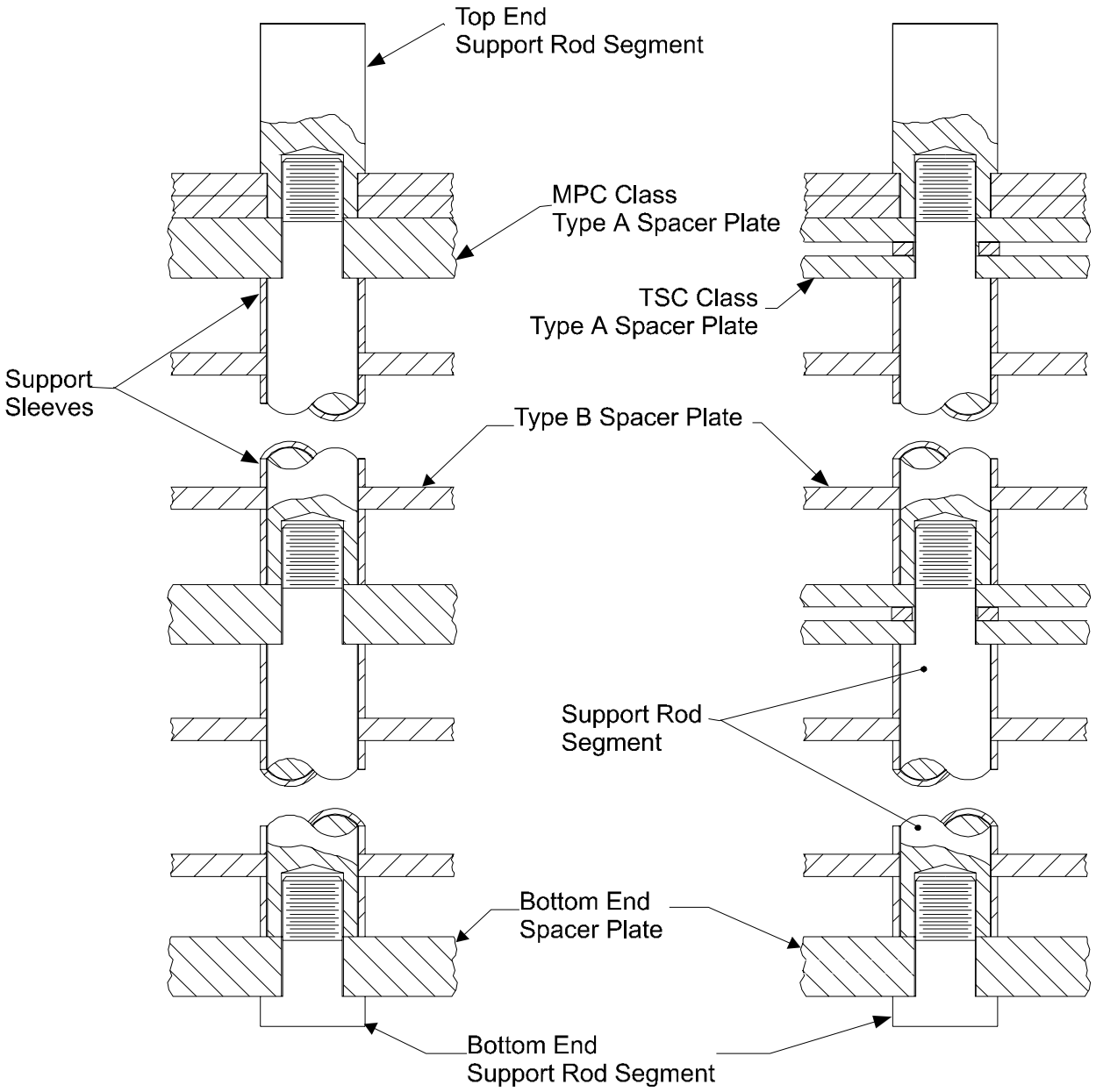

Figure 3.1-2 - FuelSolutions™ W21 Support Rod Assembly Detail

This page intentionally left blank.

3.2 Weights and Centers of Gravity

The weights and centers of gravity of the FuelSolutions™ W21M and W21T canister classes are summarized in this section. Weights and centers of gravity are calculated for all combinations of W21 canister types and accommodated fuel assembly classes. The different canister classes and types are described further in Section 3.1.1. The fuel assembly classes accommodated by each W21 canister type are identified in Table 1.2-3, along with the fuel cross section dimensions and weights. All canister weights and centers of gravity are calculated based on nominal dimensions and locations of the individual canister components. The total weight of each W21M and W21T canister configuration, with the heaviest and lightest SNF assembly weights accommodated by the specific canisters, is summarized for the dry storage configuration (i.e., dry sealed canister containing payload) in Table 3.2-1 and Table 3.2-2, respectively. The heaviest dry sealed W21 canister is the W21M-LS canister, which contains B&W 15 x 15 fuel with control components, and weighs 80.9 kips.

The weights and centers of gravity for the FuelSolutions™ W21M and W21T basket assembly configurations for all fuel classes qualified for storage using the FuelSolutions™ W21 canister are shown in Table 3.2-3 and Table 3.2-4, respectively. The results show that the center of gravity of the canister does not vary significantly for the range of qualified fuel assembly classes. The canister configuration with the lowest center of gravity, at 91.0 inches, is the W21T-SS canister with Fort Calhoun fuel with control components. The canister configuration with the highest center of gravity, at 98.2 inches, is the W21T-LL canister with CE 16 x 16 fuel without control components.

Table 3.2-1 - Summary of FuelSolutions™ W21M Canister Weights and Centers of Gravity

Component	Canister Type							
	W21M-LD		W21M-LS		W21M-SD		W21M-SS	
	Weight (lb.)	C.G. (in.)(1)	Weight (lb.)	C.G. (in.)(1)	Weight (lb.)	C.G. (in.)(1)	Weigh t (lb.)	C.G. (in.)(1)
Canister Shell Assembly	23,851	102.9	24,779	102.0	24,120	94.9	24,407	96.8
Cylindrical Shell and Bottom End	14,664	49.6	15,211	48.7	14,959	44.2	14,838	45.2
Top Shield Plug	6,322	187.1	6,704	185.1	6,295	176.7	6,704	175.1
Top Inner Closure Plate	955	189.5	955	189.5	955	179.5	955	179.5
Top Outer Closure Plate	1,910	191.0	1,910	191.0	1,910	181.0	1,910	181.0
Basket Assembly	21,141	94.0	20,829	94.3	20,041	89.0	19,831	88.7
Heaviest Payload(2)	30,030	94.9	35,280	95.3	34,377	89.7	31,122	90.0
Lightest Payload(2)	30,030	94.9	28,686	93.8	30,072	89.4	25,441	94.2
Sealed Canister (Heaviest)	**75,022**	**97.2**	**80,888**	**97.1**	**78,538**	**91.1**	**75,360**	**91.8**
Sealed Canister (Lightest)	**75,022**	**97.2**	**74,294**	**96.7**	**74,233**	**91.1**	**69,679**	**93.5**

Notes:

(1) Centers of gravity are relative to bottom end of the canister, as shown in Figure 3.2-1.

(2) Payload weight includes the spent fuel assemblies and fuel assembly spacers (where applicable).

Table 3.2-2 - Summary of FuelSolutions™ W21T Canister Weights and Centers of Gravity

Component	Canister Type							
	W21T-LL		W21T-LS		W21T-SL		W21T-SS	
	Weight (lb.)	C.G. (in.)[1]	Weight (lb.)	C.G. (in.)[1]	Weight (lb.)	C.G. (in.)[1]	Weight (lb.)	C.G. (in.)[1]
Canister Shell Assembly	22,485	108.0	24,779	102.0	23,232	100.8	24,407	96.8
Cylindrical Shell and Bottom End	13,394	54.0	15,211	48.7	13,737	47.8	14,838	45.2
Top Shield Plug	6,227	186.3	6,704	185.1	6,630	176.1	6,704	175.1
Top Inner Closure Plate	955	189.5	955	189.5	955	179.5	955	179.5
Top Outer Closure Plate	1,910	191.0	1,910	191.0	1,910	181.0	1,910	181.0
Basket Assembly	20,068	92.9	19,813	93.7	19,026	88.0	18,817	88.1
Heaviest Payload[2]	30,030	94.4	35,280	95.3	34,377	89.3	31,122	90.0
Lightest Payload[2]	30,030	94.4	28,686	93.8	30,072	89.0	25,441	94.2
Sealed Canister (Heaviest)	**72,584**	**98.2**	**79,873**	**97.0**	**76,635**	**92.5**	**74,346**	**91.7**
Sealed Canister (Lightest)	**72,584**	**98.2**	**73,279**	**96.5**	**72,330**	**92.5**	**68,665**	**93.4**

Notes:

(1) Centers of gravity are relative to bottom end of the canister, as shown in Figure 3.2-1.

(2) Payload weight includes the spent fuel assemblies and fuel assembly spacers (where applicable).

Table 3.2-3 - FuelSolutions™ W21M Canister Weights and Centers of Gravity

W21M Canister Type	Fuel Assembly Class/Configuration(1)	Empty Canister		Payload		Sealed Canister	
		Wt. (lb.)	C.G. (in.)(2)	Wt. (lb.)	C.G. (in.)(2)	Wt. (lb.)	C.G. (in.)(2)
LD	CE 16 X 16 (w/o CC)	44,992	98.8	30,030	94.2	75,022	96.9
	CE System 80 (w/o CC)	44,992	98.8	30,030	94.9	75,022	97.2
LS	B&W 15 x 15 (w/ CC)	45,608	98.5	35,280	95.3	80,888	97.1
	B&W 17 x 17 (w/ CC)	45,608	98.5	34,734	95.3	80,342	97.1
	CE 14 x 14 (w/ CC)	45,608	98.5	28,749	93.3	74,357	96.5
	WE 17 x 17 (w/ CC)	45,608	98.5	34,902	93.0	80,510	96.1
	St. Lucie 2 (w/ CC)	45,608	98.5	28,686	93.8	74,294	96.8
SD	B&W 15 x 15 (w/o CC)	44,161	92.3	31,815	90.0	75,976	91.3
	B&W 17 x 17 (w/o CC)	44,161	92.3	31,605	90.0	75,766	91.3
	WE 14 x 14 (w/ CC)	44,161	92.3	30,072	89.4	74,233	91.1
	WE 15 x 15 (w/ CC)	44,161	92.3	34,377	89.7	78,538	91.1
SS	CE 14 x 14 (w/o CC)	44,238	93.1	27,132	87.9	71,370	91.1
	WE 14 x 14 (w/o CC)	44,238	93.1	27,342	89.9	71,580	91.9
	WE 15 x 15 (w/o CC)	44,238	93.1	30,912	89.9	75,150	91.8
	WE 17 x 17 (w/o CC)	44,238	93.1	31,122	90.0	75,360	91.8
	Fort Calhoun (w/o CC)(3)	44,238	93.1	26,498	90.2	70,736	92.0
	Palisades (w/o CC)(3)	44,238	93.1	29,724	95.4	73,962	94.0
	St. Lucie 2 (w/o CC)	44,238	93.1	27,300	88.4	71,538	91.3
	Yankee Rowe (w/o CC)(3)	44,238	93.1	27,589	97.3	71,827	94.7
	Fort Calhoun (w/ CC)(3)	44,238	93.1	27,027	87.8	71,265	91.1

Notes:

(1) Configurations include w/ CC - with control components; w/o CC - without control components; and w/o channels - without channels.

(2) Centers of gravity are relative to the bottom of the canister, as shown in Figure 3.2-1.

(3) These fuel assemblies require the use of fuel spacers. The weights reported include the weight of the fuel spacer.

Table 3.2-4 - FuelSolutions™ W21T Canister Weights and Centers of Gravity

W21T Canister Type	Fuel Assembly Class/Configuration[1]	Empty Canister		Payload		Sealed Canister	
		Wt. (lb.)	C.G. (in.)[2]	Wt. (lb.)	C.G. (in.)[2]	Wt. (lb.)	C.G. (in.)[2]
LL	CE 16 X 16 (w/o CC)	42,554	100.9	30,030	94.4	72,584	98.2
LS	B&W 15 x 15 (w/ CC)	44,593	98.3	35,280	95.3	79,873	97.0
	B&W 17 x 17 (w/ CC)	44,593	98.3	34,734	95.3	79,327	97.0
	CE 14 x 14 (w/ CC)	44,593	98.3	28,749	93.3	73,342	96.4
	WE 17 x 17 (w/ CC)	44,593	98.3	34,902	93.0	79,495	96.0
	St. Lucie 2 (w/ CC)	44,593	98.3	28,686	93.8	73,279	96.6
SL	B&W 15 x 15 (w/o CC)	42,258	95.1	31,815	89.6	74,073	92.7
	B&W 17 x 17 (w/o CC)	42,258	95.1	31,605	89.6	73,863	92.7
	WE 14 x 14 (w/ CC)	42,258	95.1	30,072	89.0	72,330	92.5
	WE 15 x 15 (w/ CC)	42,258	95.1	34,377	89.3	76,635	92.5
SS	CE 14 x 14 (w/o CC)	43,224	93.0	27,132	87.9	70,356	91.0
	WE 14 x 14 (w/o CC)	43,224	93.0	27,342	89.9	70,566	91.8
	WE 15 x 15 (w/o CC)	43,224	93.0	30,912	89.9	74,136	91.7
	WE 17 x 17 (w/o CC)	43,224	93.0	31,122	90.0	74,346	91.8
	Fort Calhoun (w/o CC)[3]	43,224	93.0	26,498	90.2	69,722	91.9
	Palisades (w/o CC)[3]	43,224	93.0	29,724	95.4	72,948	94.0
	St. Lucie 2 (w/o CC)	43,224	93.0	27,300	88.4	70,524	91.2
	Yankee Rowe (w/o CC)[3]	43,224	93.0	27,589	97.3	70,812	94.7
	Fort Calhoun (w/ CC)[3]	43,224	93.0	27,027	87.8	70,251	91.0

Notes:

(1) Configurations include w/ CC - with control components; w/o CC - without control components; and w/o channels - without channels.

(2) Centers of gravity are relative to the bottom of the canister, as shown in Figure 3.2-1.

(3) These fuel assemblies require the use of fuel spacers. The weights reported include the weight of the fuel spacer.

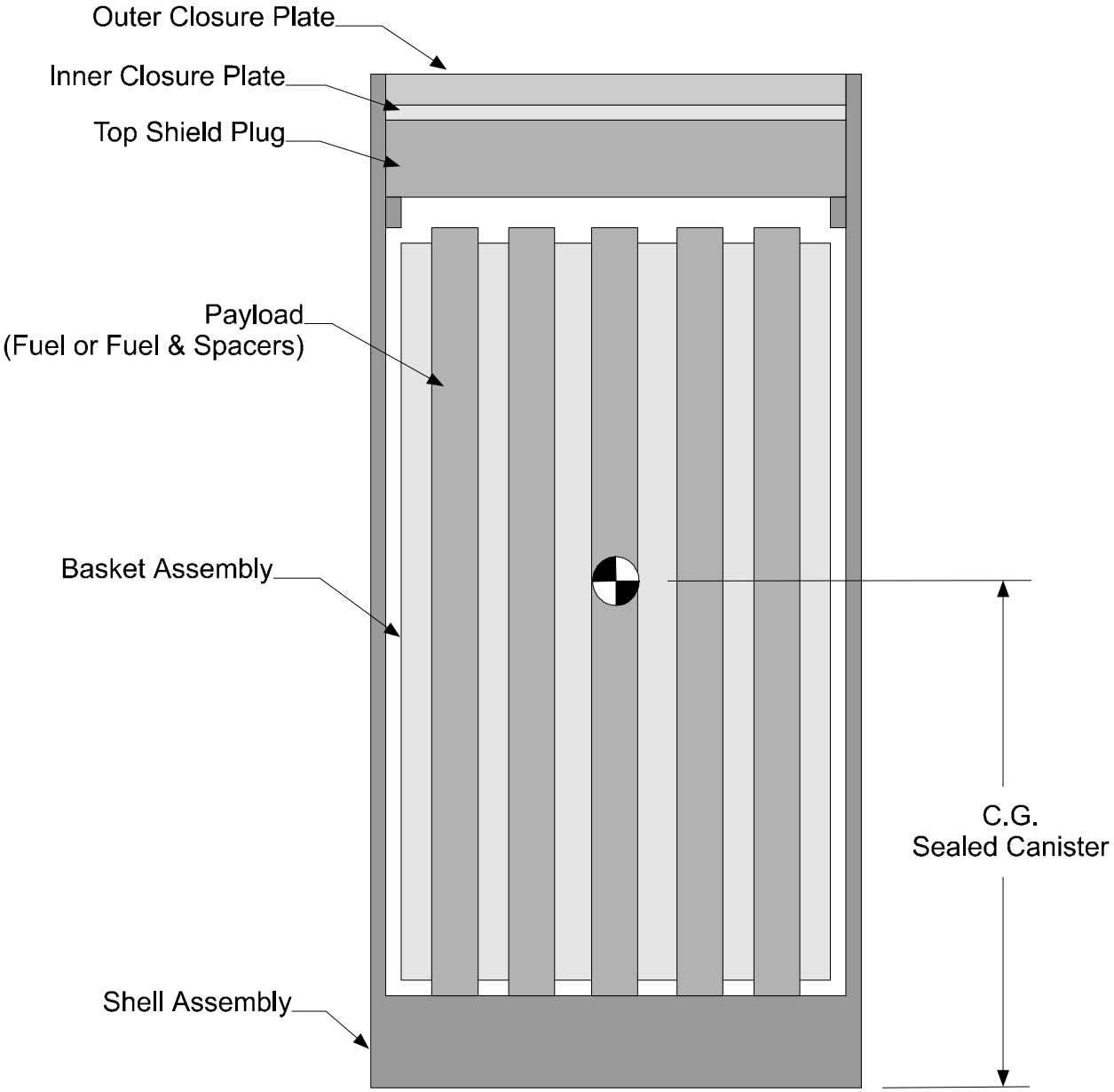

Figure 3.2-1 - FuelSolutions™ W21 Canister Center of Gravity Diagram

3.3 Mechanical Properties of Materials

3.3.1 Structural Materials

The FuelSolutions™ W21M and W21T canister structural components are fabricated entirely from austenitic stainless steel and high strength carbon steel. Table 3.3-1 and Table 3.3-2 identify components, material specifications, and the corresponding material data tables for the W21M and W21T canister assemblies, respectively. In all cases, the weight density and Poisson's ratio for stainless steel is taken to be 0.290 lb/in^3 and 0.29, respectively. The weight density and Poisson's ratio for carbon steel is taken to be 0.283 lb/in^3 and 0.3, respectively. Detailed descriptions of the W21M and W21T canister materials of construction are included in the following paragraphs.

All FuelSolutions™ W21 canister shell assembly designs are of similar construction and vary only in overall length; cavity length; type of austenitic stainless steel used for the shell and closure plates; and shielding materials. The W21M canister shell assembly structural components, with the exception of the top and bottom shield plugs, are all fabricated from Type 316 austenitic stainless steel. The W21T canister shell assembly structural components are all fabricated from Type 304 stainless steel. The licensee may also elect to use Type 304 stainless steel with a reduced carbon content for the W21T canister on a site-specific basis. The shield plugs are fabricated from carbon steel, lead, or DU. The bottom shield plug is encased between the bottom closure plate, cylindrical shell extension, and the bottom end plate. The top lead and DU shield plugs are encased in Type 316 and Type 304 stainless steel, respectively. The DU is conservatively assumed to provide no structural support in tension or bending. The top carbon steel shield plug is coated to provide corrosion protection.

The FuelSolutions™ W21 basket assemblies consist of numerous spacer plates, eight support rod assemblies, and guide tube assemblies. The FuelSolutions™ W21M and W21T canister basket designs differ only in the materials used for the Type A spacer plates and support rod assemblies. Each FuelSolutions™ W21 basket assembly includes six Type A spacer plates. The W21M Type A spacer plates are fabricated from 2-inch thick Type XM-19 austenitic stainless steel plate. Each W21T Type A spacer plate, except for the bottom end spacer plate, is replaced by two 0.75-inch thick SA-517 or A514 Grade P or Grade F high strength carbon steel plates separated by 0.50-inch thick spacer sleeves at each support rod location, as shown in Figure 3.1-2. All W21M and W21T Type B spacer plates are fabricated from 0.75-inch thick SA-517 or A514 Grade P or Grade F high strength carbon steel plate. The W21M support rods and support sleeves are fabricated from Type XM-19 and Type 304L austenitic stainless steels, respectively. The W21T support rods and sleeves are fabricated from SA-564 Grade 630 precipitation-hardened stainless steel, and SA-106, Grade C carbon steel, respectively.

Each W21M and W21T guide tube assembly consists of a guide tube, a wrapper, and four neutron absorber panels. The guide tubes and wrappers are fabricated from Type 316 austenitic stainless steel. The borated neutron absorber panel material properties are discussed in Section 3.3.2.

For the postulated transfer cask side drop condition, the guide tubes are evaluated using linear elastic and plastic large-deflection finite element analysis. The elastic-plastic material properties for this analysis are based on the stress-strain curve contained in NUREG/CR-0481[10] and minimum elongation data for Type 316 stainless steel from Part II, Section A of the ASME Code. Since the guide tube structural evaluations are conservatively performed at a design temperature of 700°F, and the stress-strain values from the report are provided up to temperature of 600°F, a "normalization" factor is used to determine the equivalent plastic material properties at 700°F. This factor is computed based on the ASME Code value for yield stress of Type 316 stainless steel at 700°F, divided by the report value at 0.2% offset yield strain for a temperature of 600°F. These factors are then applied to the report stress values for all values of strain at 600°F, to arrive at the stress vs. strain values at 700°F. The plastic stress-strain curve above 4% strain is based on material property data from the ASME Code. The strain corresponding to the ultimate tensile strength, as obtained from Section II, Part A of the ASME Code, is specified as a minimum elongation of 40%. Therefore, a strain of 40% is assumed at ultimate tensile failure of the material. The stress-strain curve between 4% and 40% is assumed to be linear. These values, as presented in Table 3.3-4 and plotted in Figure 3.3-1, are used in the plastic analysis of the guide tube.

All structural materials used for the W21 canister assemblies are permitted for use in Section III construction per Section II, Part D and Code Case N-71-16[11] of the ASME Code. The SA-517, Grade P and Grade F, and A514, Grade P and Grade F carbon steel materials used for the spacer plates are permitted for supports only. Use of these materials for the basket assembly spacer plates is acceptable since there is no significant effect on the material properties for the intended service conditions. As discussed in Section 3.1.2.3, the cumulative effect of irradiation from the SNF does not significantly affect the fracture toughness of the SA-517, Grade P and F, and A514, Grades P and F carbon steel materials over the 100 year design life of the canister.

In accordance with Section III of the ASME Code, the maximum allowable temperatures of the canister materials are limited to 800°F for austenitic stainless steel (e.g., Type 304, 316, and XM-19), 700°F for carbon steel (A36, SA-517 Grades P and F, and A514 Grades P and F), and 650°F for SA-564, Grade 630 precipitation hardened stainless steel. These allowable temperatures are applied to the canister materials for all normal design conditions. Short-term elevated temperatures in excess of these allowable values may occur during fabrication, loading operations, off-normal transfer, or accident storage conditions in which a postulated cask drop accident is not credible or need not be combined with another accident condition. The maximum temperatures in the W21 canister remain below 1,000°F for all short-term thermal conditions. As shown in ASME Code Case N-47-33,[12] the strength properties of austenitic stainless steels do not change due to exposure at 1,000°F for up to 10,000 hours. Therefore, short-term exposure to

---

[10] NUREG/CR-0481, SAND77-1872, *An Assessment of Stress-Strain Data Suitable for Finite-Element Elastic-Plastic Analysis of Shipping Containers*, Rack, H. J., and Knorovsky, G. A., R-7, September 1978.

[11] Case N-71-16, *Additional Materials for Subsection NF, Class 1, 2, 3, and MC Component Supports Fabricated by Welding*, American Society of Mechanical Engineers (ASME) Boiler and Pressure Vessel Code, 1995 Code Cases, Nuclear Components, 1995 Edition.

[12] Case N-47-33, *Class 1 Components in Elevated Temperature Service*, American Society of Mechanical Engineers (ASME) Boiler and Pressure Vessel Code, 1995 Code Cases, Nuclear Components, 1995 Edition.

the temperatures of this magnitude does not have any significant effect on mechanical properties of the basket assembly materials.

3.3.2 Non-Structural Materials

The FuelSolutions™ W21M and W21T canister lead and DU shield plugs and aluminum/boron carbide neutron absorber panels are considered non-structural members. As such, no credit is taken for these components in the canister structural evaluation.

The W21M canister shell assembly top and bottom shield plugs for the Type LD and SD canister configurations include DU cores encased in stainless steel. Although the strength of DU is comparable to that of mild stainless steel at room temperature, as shown in Table 3.3-11, the fracture toughness of DU at extremely cold temperatures is not sufficient to preclude the possibility of brittle fracture. Consequently, it is conservatively assumed that DU has no tensile or bending strength, and is only capable of transferring compressive loads. The weight density and Poisson's ratio of DU are 0.686 lb/in^3 and 0.25, respectively.[13]

The W21T canister shell assembly top and bottom shield plugs for the Type LL and SL canister configurations include lead cores encased in stainless steel. The static and dynamic material properties of lead are summarized in Table 3.3-11. The weight density and Poisson's ratio of lead are 0.410 lb/in^3 and 0.43, respectively.[14]

The guide tube assembly uses aluminum/boron carbide (BORAL®) for the neutron absorber panels. The neutron absorber panels are assumed to have no load carrying capacity and are only designed to support bearing loads between the guide tube and supporting spacer plate ligaments. As such, the neutron absorber panels are captured between the guide tube and the outer wrapper, which are designed to maintain the geometry of the neutron absorber panels under all normal, off-normal, and postulated accident loading conditions. The mechanical properties of the neutron absorber panel material are summarized in Table 3.3-12. The neutron absorber material data is taken from the manufacturer's published data.

[13] Blasch, E. B., et al., *The Use of Uranium as a Shield Material*, Table 7, "Room Temperature Properties of Uranium Alloys," Nuclear Engineering and Design 13, North Holland Publishing Company, 1970.

[14] Hoffman, W., *Lead and Lead Alloys*, English Translation of 2nd German Ed., Springer-Verlag, NY-Heidelber, Berlin, 1970.

Table 3.3-1 - Summary of FuelSolutions™ W21M Canister Materials

Assy.	Component	Material[(1)]	Reference Table
Shell Assembly	Cylindrical Shell	SA-240, Type 316	Table 3.3-3
	Bottom Closure Plate	SA-240, Type 316	Table 3.3-3
	Bottom Shield Plug	A36 or DU	Table 3.3-8 & Table 3.3-11
	Bottom End Plate	SA-240, Type 316	Table 3.3-3
	Top Inner and Outer Closure Plates	SA-240, Type 316	Table 3.3-3
	Top Shield Plug	A36 or DU	Table 3.3-8 & Table 3.3-11
	Top Shield Plug Bottom Plate	SA-240, Type 316	Table 3.3-3
	Shield Plug Support Ring	SA-240, Type 316	Table 3.3-3
Basket Assembly	Type A Spacer Plate	SA-240, Type XM-19	Table 3.3-5
	Type B Spacer Plate	SA-517, Grade P or F A514, Grade P or F	Table 3.3-9
	Support Rod	SA-479, Type XM-19	Table 3.3-5
	Support Sleeve	SA-312, Type 304L	Table 3.3-6
	Guide Tube	SA-240, Type 316	Table 3.3-3
	Guide Tube Attachment Bracket	SA-240, Type 316	Table 3.3-3
	Guide Tube Wrapper	SA-240, Type 316	Table 3.3-3
	Neutron Absorber Panels	BORAL®	Table 3.3-12

Notes:

(1) Permissible welding processes and filler metals are shown on the General Arrangement Drawings in Section 1.5.1.

Table 3.3-2 - Summary of FuelSolutions™ W21T Canister Materials

Assy.	Component	Material[1]	Reference Table
Shell Assembly	Cylindrical Shell	SA-240, Type 304	Table 3.3-3
	Bottom Closure Plate	SA-240, Type 304	Table 3.3-3
	Bottom Shield Plug	A36 or ASTM B29 Chemical Copper Lead	Table 3.3-8 & Table 3.3-11
	Bottom End Plate	SA-240, Type 304, or SA-240, Type XM-19[4]	Table 3.3-3 and Table 3.3-5
	Top Inner and Outer Closure Plates	SA-240, Type 304	Table 3.3-3
	Top Shield Plug	A36 or ASTM B29 Chemical Copper Lead	Table 3.3-8 & Table 3.3-11
	Top Shield Plug Bottom Plate	SA-240, Type 304	Table 3.3-3
	Shield Plug Support Ring	SA-240, Type 304	Table 3.3-3
Basket Assembly	Type A Spacer Plate	SA-517, Grade P or F A514, Grade P or F	Table 3.3-9
	Bottom End Type A Space Plate	SA-240, Type XM-19	Table 3.3-5
	Type B Spacer Plate	SA-517, Grade P or F A514, Grade P or F	Table 3.3-9
	Support Rod	SA-564, Grade 630	Table 3.3-7
	Support Sleeve	SA-106, Class C	Table 3.3-10
	Guide Tube	SA-240, Type 316	Table 3.3-3
	Guide Tube Attachment Bracket	SA-240, Type 316	Table 3.3-3
	Guide Tube Wrapper	SA-240, Type 316	Table 3.3-3
	Neutron Absorber panels	BORAL®	Table 3.3-12

Notes:

(1) Permissible welding processes and filler metals are shown on the General Arrangement Drawings in Section 1.5.1.

Table 3.3-3 - Type 316 and Type 304 Stainless Steel Material Properties

Material Spec.	Temp. (°F)	Yield Strength(1) S_y (ksi)	Ultimate Strength(2) S_u (ksi)	Design S.I.(3) S_m (ksi)	Elastic Modulus(4) E (ksi ×10^3)	Mean Coefficient of Thermal Expansion,(5,6) (in/in/°F x 10^{-6})
SA-240 Type 316	-40	30.0	75.0	20.0	28.9	8.23
	-20	30.0	75.0	20.0	28.7	8.28
	70	30.0	75.0	20.0	28.3	--
	100	30.0	75.0	20.0	28.1	8.54
	200	25.8	75.0	20.0	27.6	8.76
	300	23.3	73.4	20.0	27.0	8.97
	400	21.4	71.8	19.3	26.5	9.21
	500	19.9	71.8	18.0	25.8	9.42
	600	18.8	71.8	17.0	25.3	9.60
	700	18.1	71.8	16.3	24.8	9.76
SA-240 Type 304	-40	30.0	75.0	20.0	28.9	8.21
	-20	30.0	75.0	20.0	28.7	8.26
	70	30.0	75.0	20.0	28.3	--
	100	30.0	75.0	20.0	28.1	8.55
	200	25.0	71.0	20.0	27.6	8.79
	300	22.5	66.0	20.0	27.0	9.00
	400	20.7	64.4	18.7	26.5	9.19
	500	19.4	63.5	17.5	25.8	9.37
	600	18.2	63.5	16.4	25.3	9.53
	700	17.7	63.5	16.0	24.8	9.69

Notes:

(1) ASME B&PV Code, Section II, Part D, Table Y-1.

(2) ASME B&PV Code, Section II, Part D, Table U.

(3) ASME B&PV Code, Section II, Part D, Table 2A.

(4) ASME B&PV Code, Section II, Part D, Table TM-1, Material Group G.

(5) ASME B&PV Code, Section II, Part D, Table TE-1, 16Cr-12Ni-2Mo, Coefficient B (mean from 70ºF) for Type 316 stainless steel.

(6) ASME B&PV Code, Section II, Part D, Table TE-1, 18Cr-8Ni, Coefficient B (mean from 70ºF) for Type 304 stainless steel.

Table 3.3-4 - Type 316 Stainless Steel Plastic Material Properties

Strain	0.2%	0.273%(2)	0.3%	0.8%	4.0%	40%(3)
Report Values(1) at 600°F (ksi)	21.0	21.4	21.5	25.0	37.5	---
Values at 700°F (ksi)	---	18.1	---	21.2	31.8	71.8

Notes:

(1) From NUREG/CR-0481, SAND77-1872, R-7, *An Assessment of Stress-Strain Data Suitable for Finite-Element Elastic-Plastic Analysis of Shipping Containers*, Figure 8(d), heat 297.

(2) Strain corresponding to 0.2% offset yield at 700°F.

(3) Minimum elongation of Type 316 stainless steel from Part II, Section A, SA-240, Table 2 of the ASME Code.

Table 3.3-5 - Type XM-19 Stainless Steel Material Properties

Material Spec.	Temp. (°F)	Yield Strength(1) S_y (ksi)	Ultimate Strength(2) S_u (ksi)	Design S.I.(3) S_m (ksi)	Elastic Modulus(4) E (ksi ×10^3)	Mean Coefficient of Thermal Expansion,(5) (in/in/°F x 10^{-6})
SA-240 & SA-479 Type XM-19	-40	55,000	100,000	33,300	28.9	8.05
	-20	55,000	100,000	33,300	28.7	8.08
	70	55,000	100,000	33,300	28.3	---
	100	55,000	100,000	33,300	28.1	8.30
	200	47,000	99,500	33,200	27.6	8.48
	300	43,400	94,300	31,400	27.0	8.65
	400	40,800	90,700	30,200	26.5	8.79
	500	38,800	89,100	29,700	25.8	8.92
	600	37,300	87,800	29,200	25.3	9.03
	700	36,300	86,500	28,800	24.8	9.15

Notes:

(1) ASME B&PV Code, Section II, Part D, Table Y-1, for material annealed at 1925ºF-1975ºF.

(2) ASME B&PV Code, Section II, Part D, Table U.

(3) ASME B&PV Code, Section II, Part D, Table 2A.

(4) ASME B&PV Code, Section II, Part D, Table TM-1, Material Group G.

(5) ASME B&PV Code, Section II, Part D, Table TE-1, 22Cr-13Ni, Coefficient B (mean from 70ºF).

Table 3.3-6 - Type 304L Stainless Steel Material Properties

Material Spec.	Temp. (°F)	Yield Strength(1) S_y (ksi)	Ultimate Strength(2) S_u (ksi)	Design S.I.(3) S_m (ksi)	Elastic Modulus(4) E (ksi ×10^3)	Mean Coefficient of Thermal Expansion,(5) (in/in/°F x 10^{-6})
SA-312 Type 304L	-40	25.0	70.0	16.7	28.9	8.21
	-20	25.0	70.0	16.7	28.7	8.26
	70	25.0	70.0	16.7	28.3	---
	100	25.0	70.0	16.7	28.1	8.55
	200	21.3	66.2	16.7	27.6	8.79
	300	19.1	60.9	16.7	27.0	9.00
	400	17.5	58.5	15.8	26.5	9.19
	500	16.3	57.8	14.8	25.8	9.37
	600	15.5	57.0	14.0	25.3	9.53
	700	14.9	56.2	13.5	24.8	9.69

Notes:

(1) ASME B&PV Code, Section II, Part D, Table Y-1.

(2) ASME B&PV Code, Section II, Part D, Table U.

(3) ASME B&PV Code, Section II, Part D, Table 2A.

(4) ASME B&PV Code, Section II, Part D, Table TM-1, Material Group G.

(5) ASME B&PV Code, Section II, Part D, Table TE-1, 18Cr-8Ni, Coefficient B (mean from 70ºF).

Table 3.3-7 - SA-564, Grade 630 Age Hardened Steel Material Properties

Material Spec.	Temp. (°F)	Yield Strength(1) S_y (ksi)	Ultimate Strength(2) S_u (ksi)	Design S.I.(3) S_m (ksi)	Elastic Modulus(4) E (ksi ×10^3)	Mean Coefficient of Thermal Expansion,(5) (in/in/°F x 10^{-6})
SA-564, Grade 630, (H1075)	-40	125.0	145.0	48.3	29.8	5.88
	-20	125.0	145.0	48.3	29.7	5.88
	70	125.0	145.0	48.3	29.2	---
	100	125.0	145.0	48.3	28.8	5.89
	200	115.6	145.0	48.3	28.5	5.90
	300	110.7	145.0	48.3	27.9	5.90
	400	106.9	141.0	47.0	27.3	5.91
	500	103.5	140.0	46.0	26.7	5.91
	600	100.9	136.1	45.3	26.1	5.93

Notes:

(1) ASME B&PV Code, Section II, Part D, Table Y-1.

(2) ASME B&PV Code, Section II, Part D, Table U.

(3) ASME B&PV Code, Section II, Part D, Table 2A.

(4) ASME B&PV Code, Section II, Part D, Table TM-1, Material Group F.

(5) ASME B&PV Code, Section II, Part D, Table TE-1, 17Cr-4Ni-4Cu, Coefficient B (mean from 70ºF).

Table 3.3-8 - A36 Carbon Steel Material Properties

Material Spec.	Temp. (°F)	Yield Strength(1) S_y (ksi)	Ultimate Strength(2) S_u (ksi)	Design S.I.(3) S_m (ksi)	Elastic Modulus(4) E (ksi ×10^3)	Mean Coefficient of Thermal Expansion,(5) (in/in/°F x 10^{-6})
A36	-40	36.0	57.9	19.3	30.0	5.03
	-20	36.0	57.9	19.3	29.9	5.10
	70	36.0	57.9	19.3	29.5	---
	100	36.0	57.9	19.3	29.3	5.53
	200	32.8	57.9	19.3	28.8	5.89
	300	31.9	57.9	19.3	28.3	6.26
	400	30.8	57.9	19.3	27.7	6.61
	500	29.1	57.9	19.3	27.3	6.91
	600	26.6	53.1	17.7	26.7	7.17
	700	25.9	51.9	17.3	25.5	7.41

Notes:

(1) ASME B&PV Code, Section II, Part D, Table Y-1.

(2) S_u for A-36 is not provided in Table U and is conservatively taken as 3Sm.

(3) ASME B&PV Code, Section II, Part D, Table 2A.

(4) ASME B&PV Code, Section II, Part D, Table TM-1, Carbon Steels with C ≤ 0.30%.

(5) ASME B&PV Code, Section II, Part D, Table TE-1, Material Group C, Coefficient B (mean from 70ºF).

Table 3.3-9 - SA-517, Grades P and F, and A514, Grades P and F Carbon Steel Material Properties

Material Spec.	Temp. (°F)	Yield Strength[1] S_y (ksi)	Ultimate Strength[2] S_u (ksi)	Design S.I.[3] S_m (ksi)	Elastic Modulus[4] E (ksi ×10^3)	Mean Coefficient of Thermal Expansion,[5] (in/in/°F x 10^{-6})
SA-517 Gr. P and F	-40	100.0	115.0	38.3	30.0	5.89
	-20	100.0	115.0	38.3	29.9	5.95
	70	100.0	115.0	38.3	29.5	---
	100	100.0	115.0	38.3	29.3	6.27
	200	95.8	115.0	38.3	28.8	6.54
	300	93.0	115.0	38.3	28.3	6.78
	400	90.2	115.0	38.3	27.7	6.98
	500	89.5	115.0	38.3	27.3	7.16
	600	87.5	115.0	38.3	26.7	7.32
	700	84.4	112.6	37.5	25.5	7.47
A514 Gr. P and F	-40	100.0	110.0	36.7	30.0	5.89
	-20	100.0	110.0	36.7	29.9	5.95
	70	100.0	110.0	36.7	29.5	---
	100	100.0	110.0	36.7	29.3	6.27
	200	95.5	110.0	36.7	28.8	6.54
	300	92.5	110.0	36.7	28.3	6.78
	400	89.8	110.0	36.7	27.7	6.98
	500	87.6	110.0	36.7	27.3	7.16
	600	85.5	110.0	36.7	26.7	7.32
	700	83.0	107.7	35.9	25.5	7.47

Notes:

(1) ASME B&PV Code, Section II, Part D, Table Y-1 (SA-517); Code Case N-71-16, Table 3 (A514).

(2) ASME B&PV Code, Code Case N-71-16, Table 5.

(3) ASME B&PV Code, Section II, Part D, Table 2A (SA-517); Code Case N-71-16, Table 1 (A514).

(4) ASME B&PV Code, Section II, Part D, Table TM-1, Carbon Steels with C ≤ 0.30%.

(5) ASME B&PV Code, Section II, Part D, Table TE-1, Material Group E, Coefficient B (mean from 70ºF).

Table 3.3-10 - SA-106 Grade C Material Properties

Material Spec.	Temp. (°F)	Yield Strength(1) S_y (ksi)	Ultimate Strength(2) S_u (ksi)	Design S.I.(3) S_m (ksi)	Elastic Modulus(4) E (ksi ×10^3)	Mean Coefficient of Thermal Expansion,(5) (in/in/°F x 10^{-6})
SA-106 Gr. C	-40	40.0	70.0	23.3	29.9	5.23
	-20	40.0	70.0	23.3	29.8	5.30
	70	40.0	70.0	23.3	29.3	---
	100	40.0	70.0	23.3	29.1	5.73
	200	36.5	70.0	23.3	28.6	6.09
	300	35.5	70.0	23.3	28.1	6.43
	400	34.3	70.0	22.9	27.5	6.74
	500	32.4	70.0	21.6	27.1	7.06
	600	29.6	70.0	19.7	26.5	7.28
	700	28.8	70.0	19.2	25.3	7.51

Notes:

(1) ASME B&PV Code, Section II, Part D, Table Y-1, C-Si.

(2) ASME B&PV Code, Section II, Part D, Table U, C-Si.

(3) ASME B&PV Code, Section II, Part D, Table 2A, C-Si.

(4) ASME B&PV Code, Section II, Part D, Table TM-1, Carbon steels with C > 0.30%.

(5) ASME B&PV Code, Section II, Part D, Table TE-1, Material Group B, Coefficient B (mean from 70°F).

Table 3.3-11 - Shielding Material Mechanical Properties

Material	Temperature (°F)	Yield Strength (ksi)	Ultimate Strength (ksi)	Elastic Modulus (ksi ×10^3)	Coefficient of Thermal Expansion[3] (in/in/°F 10^{-6})
DU[1]	70	25.0	60.0	25.0	7.6[4]
ASTM B29	-99	---	---	2.50	15.28
Chemical	70	---	---	2.34	16.07
Copper	100	0.584	1.570	2.30	16.21
Lead[2]	175	0.509	1.162	2.20	16.58
	250	0.489	0.844	2.09	16.95
	325	0.311	0.642	1.96	17.54
	440	---	---	1.74	18.50
	620	---	---	1.36	20.39

Notes:

(1) Blasch, E. B., et al., *The Use of Uranium as a Shield Material*, Table 7, "Room Temperature Properties of Uranium Alloys," Nuclear Engineering and Design 13, North Holland Publishing Company, 1970.

(2) Teitz, T.E. "Determination of the Mechanical Properties of a High Purity Lead and a 0.058% Copper-Lead Alloy," WADC Technical Report 57-695, ASTIA Document No. Stanford Research Institute, Menlo Park, CA.

(3) Instantaneous coefficient of thermal expansion.

(4) Materials Engineering, Material Selector 1990, Penton Publishing, Inc., Cleveland OH, 1989.

Table 3.3-12 - Neutron Absorber Material Properties

Material Specification	Temperature, (°F)	Ultimate Strength S_u (ksi)	Elastic Modulus, E (ksi ×10^3)	Coefficient of Thermal Expansion (in/in/°F x 10^{-6})
BORAL®[1]	70	10.0	9.0	10.9

Notes:

(1) BORAL® Technical Data Sheet, AAR Advanced Structures, 12633 Inkster Road, Livonia, Michigan, 48150. The weight density and Poisson's ratio of the BORAL® neutron absorber panels are assumed equal to those of aluminum, i.e., 0.097 lb/in^3 and 0.3, respectively. Properties listed are typical and may vary. Strength properties are listed for reference only, as no structural credit is taken for BORAL® as discussed in Section 3.3.2. Additional product literature for BORAL® is provided in Section 1.5.2 of this FSAR.

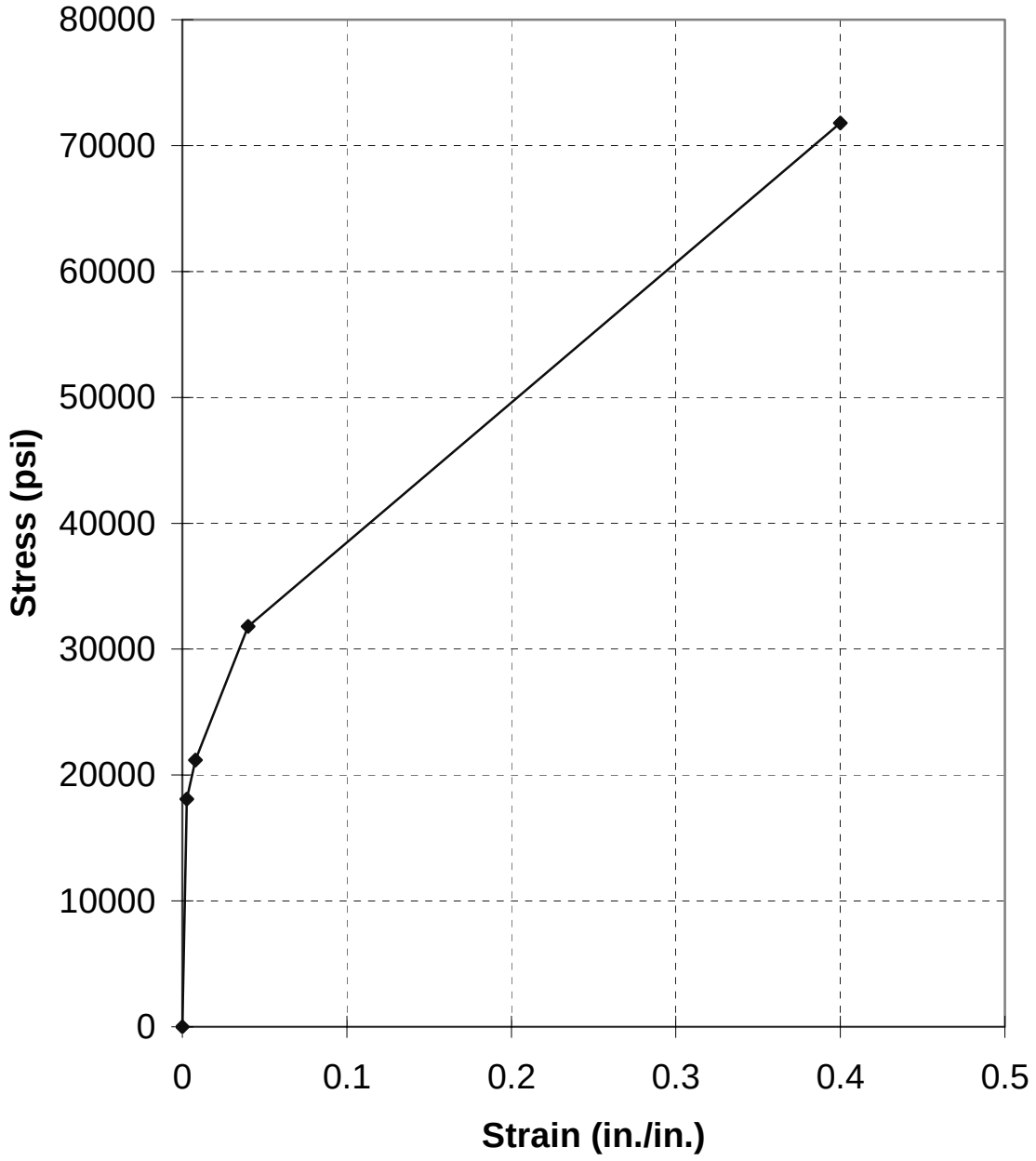

Figure 3.3-1 - Type 316 Stainless Steel Stress-Strain Curve Used for Guide Tube Analysis

3.4 General Standards for Casks

3.4.1 Chemical and Galvanic Reactions

The service conditions for FuelSolutions™ W21 canisters include immersion in PWR fuel pools, vacuum drying (hot) conditions, on-site storage conditions (helium backfill), off-site transportation, and potentially canister opening (water reflood) conditions. PWR spent fuel pools have relatively high concentrations of boric acid, giving the pool water a mildly acidic pH (4.0 to 4.5).

The austenitic stainless steel confinement boundary for the FuelSolutions™ W21 canister is evaluated for the effects of corrosion during dry storage and found to provide sufficient protection against failures due to corrosion. For ISFSI sites in which chloride concentrations may be of sufficient levels to induce stress corrosion cracking, such as those sites located in a coastal marine environment, a site specific evaluation should be performed by the licensee to assure that sufficient corrosion protection is provided. The licensee may elect to use low carbon austenitic stainless steel materials, which are not susceptible to weld sensitization for the canister confinement boundary components as discussed in Sections 3.1.1.1 and 3.3 of this FSAR, as a means of providing additional protection against stress corrosion cracking.

FuelSolutions™ W21M and W21T canisters are constructed from stainless steel, electroless nickel coated carbon steel, aluminum/boron carbide (used for neutron absorber panels), and lead or depleted uranium (DU). The aluminum/boron carbide, lead, and DU materials are all encased and seal welded in stainless steel to alleviate water immersion of the neutron absorber panel material and possible aluminum corrosion and hydrogen generation. The corrosion of stainless steels is generally extremely low, as these materials quickly form a protective passive film in the spent fuel pool environments. The electroless nickel coating on carbon steel spacer plates is for corrosion protection following canister fabrication and during the brief immersion period during fuel loading in the spent fuel pool. Electroless nickel coatings are widely used for corrosion protection and wear resistance in the electronics, petrochemical, automotive, and food industries, most often on steel and alloy steel substrates. During immersion and subsequent canister sealing, hydrogen production is relatively low. When compared to carbo-zinc or aluminum flame spray coating systems in boric acid, the hydrogen generation rate of electroless nickel is much lower than that of carbo-zinc and in the same range as aluminum flame spray. Once dried and sealed, the corrosion mechanism is removed and the nickel coating becomes inert.

The W21M and W21T canisters are evaluated to determine the potential for chemical, galvanic, or other reactions in the intended service conditions which may lead to the production of hydrogen gas, as required by NRC Bulletin 96-04. [15] The associated hydrogen generation analysis of the W21 canister considers the effects of radiolytic generation of spent fuel pool water and corrosion of the canister materials under the most limiting service conditions. The results of the hydrogen generation analysis show that the estimated time to reach a concentration of 10% of the Lower Explosive Limit (LEL) (0.4% hydrogen by volume) in the canister cavity is

[15] United States Nuclear Regulatory Commission Office of Nuclear Reactor Regulations, *Chemical, Galvanic, or Other Reactions in Spent Fuel Storage and Transportation Casks*, NRC Bulletin 96-04, OMB No. 3150-0011, July 5, 1996.

approximately 4.3 hours, based on average hydrogen generation rates. For less conservative hydrogen generation rate assumptions, the time to reach a concentration of 10% of the LEL is as long as 14 hours. Therefore, monitoring the gas in the W21 canister cavity and purging (when necessary) prior to welding the top inner closure plate to the canister shell is performed to eliminate the potential for a hydrogen gas burn event and assure the safety of the public and plant personnel. Further discussion of the procedures for monitoring and purging the canister during welding and canister opening are provided in Sections 8.1 and 8.2 of the FuelSolutions™ Storage System FSAR.

3.4.2 Positive Closure

The FuelSolutions™ W21 canister assembly is welded closed, and has no penetrations. The canister is confined within the transfer cask during movement to or from the ISFSI site, and is confined within the storage cask during dry storage. Both the transfer cask and the storage cask have bolted closures to secure and retain the canister within the cavity of these casks during normal operations, as described in the FuelSolutions™ Storage System FSAR.

3.4.3 Lifting Devices

The lifting and handling features of the FuelSolutions™ W21 canister are designed in accordance with the requirements of ANSI N14.6 for critical lift conditions, including vertical canister transfer, vertical lift of the empty canister prior to fuel loading, and vertical lifts of the canister top shield plug and top closure plates.

During vertical canister transfer operations, the sealed W21 canister is lifted and lowered using the canister vertical lift fixture, which engages a lift adapter bolted onto the canister top outer closure plate, as described in Section 1.2.1.4.3 of the FuelSolutions™ Storage System FSAR. The canister shell top closure plate and its attachment weld to the canister shell are designed in accordance with ANSI N14.6 stress design factors for non-redundant lifting devices of six against yield and ten against ultimate for this condition. Therefore, the allowable stress for the W21 canister shell, conservatively based on the weaker Type 304 material of the W21T canister shell at an upper bound design temperature of 300°F, is 3.75 ksi. The vertical canister transfer design load is based on a bounding canister weight of 82.8 kips plus an additional 15% factor to account for dynamic effects, or 95.2 kips.

In accordance with Section 3.2.1.2 of ANSI N14.6, the stress design factors are not intended to apply to situations where high local stresses are relieved by slight yielding of the material, such as the top outer closure plate to shell weld structural discontinuity. Therefore, the structural evaluation of the top outer closure plate for the vertical canister transfer loading is performed assuming no edge bending restraint is provided by the canister shell and closure weld. The maximum bending stress due to the vertical canister transfer load is calculated for a simply supported circular plate subjected to an annular line load at the lifting plate bolt circle (Roark, Table 24, case 9a, r_o = 28.5 inches, a = 32.375 inches, t = 2.0 inches) as follows:

$$\sigma = \frac{6M}{t^2} = \frac{6L_9 wa}{t^2}$$

The uniform annular line load due to the 95.2 kip lifting load distributed around the 57.0 inch diameter bolt circle is 532 pounds per inch, and the value of L_9 for r_o/a equal to 0.8803 (=28.5/32.375) is 0.1076. The bending stress due to the vertical canister transfer load is 2.78 ksi. Thus, the design margin for the ANSI N14.6 requirement is:

$$DM = \frac{3.75}{2.78} - 1 = 0.35$$

The shear stress in the top closure plate bolt hole threads due to the bounding vertical lift load of 95.2 kips is determined as follows:

$$\tau = \frac{V}{A} = 1.8 \text{ ksi}$$

where:

V = 5.95 kips/bolt, bolt tensile load (= 95.2 kips/16 bolts).

A = $A_I L_e$, thread shear area.

A_I = 2.648 in^2, 1-1/8-7UNC-2B thread shear area per inch of thread engagement per Boucher.[16]

L_e = 1.25 in., minimum thread engagement for 1.5 inch deep bolt hole.

The allowable thread shear stress taken as one sixth of the yield strength ($0.6S_y/6$), or 2.25 ksi. Therefore, the W21 canister top outer closure plate meets the ANSI N14.6 stress requirements for the vertical canister transfer loading.

The average shear stress in the top end outer closure weld due to the vertical lift load of 95.2 kips is determined using hand calculations. The total shear area of the top end outer closure weld, based on the minimum weld throat of 0.63 inches, is 126.7 in^2. The resulting average shear stress in the top end outer closure weld for the vertical lift condition is 0.75 ksi. The allowable shear stress is one sixth of the base metal shear yield strength ($0.6S_y$), or 2.25 ksi. Therefore, the W21 canister top end outer closure weld meets the ANSI N14.6 stress requirements for the vertical canister transfer loading.

The empty W21 canister, including the shell assembly and basket assembly, is lifted vertically from the top shield plug support ring and placed into the transfer cask prior to loading fuel. The maximum weight of the empty W21 canister without the top shield plug and top closure plates is approximately 37 kips. Therefore, the design load for this lift condition, including an additional 15% factor to account for dynamic effects, is 42.6 kips. The canister is lifted with a lifting fixture that engages the bottom of the shield plug support ring in four locations, having a total interface length of 20 inches. The governing stress for this lift condition is pure shear stress in the shield plug support ring attachment weld. The shield plug support ring is welded to the canister shell with an all-around 5/16-inch effective partial penetration groove weld and a 1/8-inch cover fillet, having an effective weld throat of 0.337 inches. The allowable shear stress is assumed equal to 1/3 of the yield strength, where the yield strength in shear is assumed equal to 60% of the tensile

[16] Boucher, R., *Strength of Threads*, Product Engineering, November 27, 1961.

yield strength. Therefore, the allowable weld shear stress is 6.0 ksi. The shear stress in the top shield plug support ring weld for this lift condition is:

$$f_v = \frac{42.6}{[4(5.0 + 2x1)](0.337)} = 4.5 \text{ ksi}$$

Conservatively assuming a 2:1 load spread over the height of the shield plug support ring. Therefore, the top shield plug support ring weld provides the required factor of safety.

The canister top shield plug, inner closure plate, and outer closure plate are each lifted from four attachment points on the top surface of the plates for placement on the canister inside the spent fuel building. For design purposes, the full weight of the components is assumed to be supported by two lifting attachments. The design load for each attachment includes an additional 15% allowance for crane hoist motion. Standard slings and lifting attachments used for critical lifts are designed in accordance with the requirements of ANSI/ASME B30-9.[17]

3.4.4 Canister Service Life

The term of the 10CFR72, Subpart L C of C granted by the NRC is for 20 years. Nonetheless, the FuelSolutions W21 canister is designed for 100 years of service while satisfying the conservative design requirements defined in Chapter 2 of this FSAR, including the regulatory requirements of 10CFR72. Additional assurance of the integrity of the canister and the contained SNF assemblies throughout the 100-year service life of the canister is provided through the following:

- Design, fabrication, and inspection in accordance with the applicable requirements of the ASME Code as described in Section 2.1.2 of this FSAR assures high design margins.
- Fabrication and inspection performed in accordance with the comprehensive Quality Assurance program discussed in Chapter 13 of the FuelSolutions™ Storage System FSAR assures component compliance with the fabrication requirements.
- Use of materials with known characteristics, verified through rigorous inspection and testing as described in Chapter 9 of this FSAR, assures component compliance with design requirements.

Technical specifications, as defined in Chapter 12 of this FSAR and the FuelSolutions™ Storage System FSAR, have been developed and imposed on the canister to assure that the integrity of the canister and the contained SNF assemblies is maintained throughout the 100-year service life of the canister.

The principal design considerations bearing on the adequacy of the FuelSolutions™ W21 canister for the design basis service life and the means in which they are addressed follows:

[17] ANSI/ASME-B30-9, *Slings*, 1984.

Corrosion

All canister materials that are susceptible to corrosion or that come in contact with the SNF assemblies are fabricated from corrosion resistant austenitic stainless steel, as described in Section 3.1.1. In addition, the associated weld filler metal (see Tables 3.3-1 and 3.3-2) used for the canister is selected to provide the same level of corrosion protection as the base metal. The corrosion resistant characteristics of such materials for dry SNF storage canister applications, as well as the protection offered by these materials against other material degradation effects such as radiation embrittlement, aging and creep, are discussed in EPRI TR-102462.[18] The canister is vacuum dried to remove all oxidizing liquids and gasses, and back-filled with dry inert helium at the time of closure to maintain an atmosphere in the canister that provides corrosion protection for the canister basket assembly and SNF cladding throughout the dry storage period. The preservation of this non-corrosive atmosphere is assured by the canister confinement boundary integrity as described in Section 7.1 of this FSAR.

Structural Fatigue

The passive non-cyclic nature of dry storage conditions do not subject the canister to conditions that might lead to structural fatigue failure. Ambient temperature and insolation cycling during normal dry storage conditions and the resulting fluctuations in canister thermal gradients and internal pressure is the only mechanism for fatigue. These low stress, high cycle conditions will not lead to a fatigue failure of the canister. All other off-normal or postulated accident conditions are infrequent or one time occurrences which do not lead to fatigue failures. The effects of fatigue on the canister are specifically evaluated for a 100-year service life in Section 3.5.1.4, which meets the applicable requirements of the ASME Code. In addition, the canister uses materials that are not susceptible to brittle fracture or have sufficient fracture toughness to resist brittle fracture during extreme cold conditions, as discussed in Section 3.1.2.3.

Maintenance of Helium Atmosphere

The inert helium atmosphere in the canister provides a non-oxidizing environment for the SNF cladding to assure its integrity during long-term dry storage. The preservation of the helium atmosphere in the canister is assured by the robust design of the canister confinement boundary described in Section 7.1 of this FSAR. Maintaining an inert environment in the canister mitigates conditions that might otherwise lead to SNF cladding failures. The required mass quantity of helium back-filled into the canister at the time of closure as defined in the *technical specification* contained in Section 12.3 of this FSAR, and the associated leak tightness requirements for the canister defined in the *technical specification* contained in Section 12.3 of the FuelSolutions™ Storage System FSAR, are specifically derived to assure that an inert helium atmosphere is maintained in the canister throughout the 100-year service life. Further discussion of the basis for the amount of helium required, and the development of the leak rate acceptance basis, is provided in Section 4.4.1.9 of this FSAR.

Allowable Fuel Cladding Temperatures

The helium atmosphere in the canister promotes heat removal and thus reduces SNF cladding temperatures during dry storage. In addition, the SNF decay heat will substantially decay over a

[18] EPRI TR-102462, *Shipment of Spent Fuel in Storage Canister*, Electric Power Research Institute, June 1993.

100-year dry storage period. Maintaining the fuel cladding temperatures below allowable levels during long-term dry storage mitigates the damage mechanisms that might otherwise lead to SNF cladding failures. The allowable long-term SNF cladding temperatures used for thermal acceptance of the canister design are conservatively based on a 100-year service life, as discussed in Section 4.3.2 of this FSAR This additional conservatism results in lower allowable cladding temperatures than would otherwise result from shorter time periods and increased design margin.

Neutron Absorber Boron Depletion

The effectiveness of the fixed borated neutron absorbing material used in the canister basket design requires that sufficient concentrations of boron be present to assure criticality safety during worst case design basis conditions over the 100-year service life of the canister. Information on the characteristics of the borated neutron absorbing material used in the canister basket assembly is provided in Section 1.5.2.1 of this FSAR. The relatively low neutron flux, which will continue to decay over time, to which this borated material is subjected does not result in significant depletion of the material's available boron to perform its intended safety function. In addition, the boron content of the material used in the criticality safety analysis is conservatively based on the minimum specified boron concentration (rather than the nominal) verified by testing during material manufacture which is further reduced by 25% for analysis purposes, as described in Section 6.3.2 of this FSAR. Thus, sufficient levels of boron are present in the basket assembly neutron absorbing material to maintain criticality safety function over the 100-year service life of the canister.

The above findings are consistent with those of the NRC's Waste Confidence Decision Review[19] which concluded that dry storage systems designed, fabricated, inspected and operated in accordance with such requirements are adequate for a 100-year service life while satisfying the requirements of 10CFR72.

[19] *Nuclear Regulatory Commission 10 CFR Part 51 Waste Confidence Decision Review*, U.S. Nuclear Regulatory Commission, September 11, 1990.

3.5 Evaluation of Normal Conditions

The FuelSolutions™ W21 canister is evaluated for loads occurring during normal or routine operation. Normal conditions are defined in accordance with ANSI/ANS-57.9[20] and include loads that occur regularly during normal operation. As defined in Section 2.3.1 of this FSAR, normal loads considered in the structural evaluation of the FuelSolutions™ W21 canister include the following:

- Normal temperature and insolation loading
- Normal internal pressure
- Dead weight
- Normal handling

The results of the structural evaluations performed herein demonstrate that the FuelSolutions™ W21 canisters described in Section 1.2.1.3 can withstand the effects of normal load conditions without affecting structural safety function and remain in compliance with the applicable acceptance criteria. The following sections present the evaluation of the FuelSolutions™ W21 canister for the design basis normal conditions which demonstrate that the requirements of 10 CFR 72.122 are satisfied.

The structural evaluations of the W21 canister shell assembly are performed for the bounding W21 canister shell assembly designs, as discussed in Section 3.1.1.1. The W21 basket assembly structural evaluations are performed for the bounding components as described in Section 3.1.1.2. The load combinations evaluated for off-normal conditions are defined in Table 2.3-1. The W21 canister normal load combination evaluations are provided in Section 3.5.5.

The evaluation of the effects of normal conditions on the storage cask and transfer cask are provided in Section 3.5 of the FuelSolutions™ Storage System FSAR.

3.5.1 Normal Temperature and Insolation Loadings

The FuelSolutions™ W21 canister is evaluated in the transfer cask and storage cask for steady-state thermal gradients resulting from normal ambient conditions and the design basis heat load. As discussed in Section 4.1 of this FSAR, design basis fuel decay heat loads are developed based on the range of fuel assembly classes to be stored in the FuelSolutions™ W21 canisters. Two bounding fuel decay heat loads, which are based on the effects of axial position of the active fuel region within the canister and the associated heat load profile, are used to calculate the system temperatures for normal canister transfer and storage conditions. The two design basis fuel decay heat load profiles, referred to as the “maximum thermal” profile, i.e., the maximum total heat, and the “maximum thermal gradient” profile, i.e., the maximum heat per unit length, are shown in Figure 4.1-1. The FuelSolutions™ W21 canister temperatures are calculated for a range of

[20] ANSI/ANS-57.9, *Design Criteria for an Independent Spent Fuel Storage Installation (Dry Type)*, American National Standards Institute, 1992.

normal ambient conditions for each design basis fuel decay heat load. The normal thermal conditions are identified as follows:

Normal Average: Steady-state thermal gradients resulting from a lifetime average ambient temperature of 77°F, maximum fuel decay heat, and insolation in accordance with 10CFR71.71(c)(1) averaged over a 24-hour period.

Normal Cold: Steady-state thermal gradients resulting from an ambient temperature of 0°F, maximum fuel decay heat, and no insolation.

Normal Hot: Steady-state thermal gradients resulting from an ambient temperature of 100°F, maximum fuel decay heat, and insolation in accordance with 10CFR71.71(c)(1) averaged over a 24-hour period.

The temperature distribution in the canister for the normal thermal conditions is determined in Section 4.4 of this FSAR. The canister stresses due to the thermal are combined with those due to other normal operating condition loadings, including dead weight, handling loads, and internal pressure loads. The stresses due to each of the individual normal condition loadings are addressed in the following sections and the combined effects are calculated in Section 3.5.5. The results of the canister structural evaluation for normal thermal and internal pressure loads shows that the FuelSolutions™ W21 canister satisfies all of the applicable design criteria.

3.5.1.1 Summary of Pressures and Temperatures

The canister shell assembly provides primary confinement for on-site transfer and dry storage conditions. As shown in Section 4.4.1.9 of this FSAR, the maximum internal pressure in the W21 canister for the normal hot thermal condition, assuming 1% rod failure, is 10.0 psig. The canister shell assembly is evaluated for a bounding normal condition internal pressure of 10.0 psig. The canister basket assembly does not serve any pressure retaining function.

Section 4.4 of this FSAR presents the thermal evaluation of the FuelSolutions™ W21 canisters for normal on-site transfer and storage conditions. The maximum W21 canister temperatures for normal thermal conditions within the storage cask and the transfer cask, and the bounding temperatures on which the canister material properties are based for calculating allowable stresses are summarized in Table 3.5-1.

3.5.1.2 Differential Thermal Expansion

Differential thermal expansion between the FuelSolutions™ W21 canister components and the storage cask and transfer cask is evaluated. The results of this evaluation demonstrate that the canister shell assembly expands freely within the storage cask and transfer cask cavities under all normal, off-normal, and accident thermal conditions. Similarly, the canister basket assembly components expand freely within the canister shell under all normal, off-normal, and accident conditions. The differential thermal expansion evaluation is discussed in the following sections.

3.5.1.2.1 Canister Shell Assembly

The FuelSolutions™ W21 canisters are all designed to expand freely inside the storage cask and transfer cask under all normal, off-normal, and accident on-site storage and transfer thermal conditions. Differential thermal expansion between the canister shell and the transfer cask or

storage cask is addressed in Section 3.5.2 of the FuelSolutions™ Storage System FSAR. The W21 canister shell expands freely under the most severe thermal loading.

3.5.1.2.2 Canister Basket Assembly

The FuelSolutions™ W21 basket assembly expands freely within the canister shell assembly as shown by the basket assembly differential thermal expansion evaluation. This evaluation considers the radial and longitudinal growth of the basket assemblies within the canister cavity.

Spacer Plate Differential Thermal Expansion

The diametral clearance between the shell and the basket is governed by the differential thermal expansion of the spacer plates and the canister shell. This relative expansion is calculated using the temperature differential between the two components at the hottest axial section because the heat flux and, therefore, the temperature gradient are maximized at that section. The worst case ΔT is obtained from the thermal analysis (Table 4.5-1) and corresponds to the highest canister heat load and the off-normal cold storage condition. The stainless steel spacer plates are hotter and have higher coefficients of thermal expansion than the carbon steel spacer plates and, therefore, govern. The diametral thermal expansion (δ_D) of the hottest stainless steel spacer plates relative to the canister shell is calculated as follows:

$$\delta_D = D[\alpha_{sp}(T_{sp} - 70) - \alpha_{sh}(T_{sh} - 70)] = 0.21 \text{ in.}$$

where:

D = 64.75 inches, inside diameter of the canister shell

T_{sp} = 600°F, upper bound temperature of the hottest stainless steel spacer plate for the off-normal cold storage thermal condition

α_{sp} = 9.03×10^{-6} in/in/°F, mean coefficient of thermal expansion of the spacer plate (SA-240, Type XM-19 stainless steel) at 600°F

T_{sh} = 250°F, lower bound temperature of the canister shell for the off-normal cold storage condition

α_{sh} = 8.87×10^{-6} in/in/°F, mean coefficient of thermal expansion for the shell (SA-240, Type 304 stainless steel) at 250°F

This bounding differential expansion is lower than the 0.35-inch diametral gap provided between the spacer plates and the canister shell. Therefore, no interference occurs between the canister spacer plates and canister shell for all normal and off-normal on-site transfer and storage conditions.

Support Rod Differential Thermal Expansion

The evaluation of axial differential thermal expansion between the support rods and the canister shell cavity is performed based on the temperature differential at the hottest axial section. This is conservative because it assumes that the maximum gradient is maintained along the entire cavity length. Similar to the diametral expansion above, the worst case ΔT is obtained from the thermal analysis (Table 4.5-1) and corresponds to the highest canister heat load and the cold ambient condition.

The axial thermal expansion (δ_L) of the support rods relative to the canister shell is calculated as follows:

$$\delta_L = L\left[\alpha_t (T_t - 70) - \alpha_{sh} (T_{sh} - 70)\right] = 0.08 \text{ inches}$$

where:

L = 180 inches, length of the longest canister shell cavity

T_t = 317°F, maximum support rod temperature

α_t = 8.7×10^{-6} in/in/°F, upper bound coefficient of thermal expansion for the support rod SA-479, Type XM-19 material at 350°F.

T_{sh} = 262°F, corresponding temperature of the canister shell

α_{sh} = 8.9×10^{-6} in/in/°F, lower bound coefficient of thermal expansion for the shell (SA-240, Type 304 steel at 250°F)

The calculated axial differential thermal expansion is smaller than the 0.5-inch clearance provided. Therefore, no axial interference between the support rods and canister shell occurs.

Guide Tube Differential Thermal Expansion

Differential thermal expansion between the W21 guide tube assemblies, the W21 basket assembly, and the W21 canister shell assembly is evaluated to assure that the guide tube assemblies expand freely under all normal, off-normal, and accident thermal conditions. The W21 guide tube differential thermal expansion evaluation considers both transverse differential thermal expansion between the guide tubes and the spacer plate openings and longitudinal differential thermal expansion between the guide tubes and the canister shell assembly.

The transverse differential thermal expansion between the guide tube assembly and the spacer plate opening is evaluated using hand calculations. This evaluation considers the differential thermal expansion between the guide tube O.D. and the spacer plate opening plus the differential diametral expansion between the carbon steel and stainless steel spacer plates. The transverse differential thermal expansion between the guide tube and the spacer plate openings is calculated based upon an upper bound temperature of 700°F, which bounds the maximum guide tube and spacer plate temperatures for all normal and off-normal storage and transfer thermal conditions, and accident thermal conditions. The maximum transverse differential thermal expansion is calculated as follows:

$$\delta_T = \delta_1 + \delta_2 = 0.067$$

where:

δ_1 = 0.014 in., differential thermal expansion between guide tube and carbon steel spacer plate hole.

$= D(\alpha_{gt} - \alpha_{CS,700})(T - 70)$

D = 9.43 inches, spacer plate hole size

α_{gt} = 9.76×10^{-6} in/in/°F, mean coefficient of thermal expansion for the guide tube (SA-240, Type 316) at 700°F

$\alpha_{CS,700}$= 7.47 x 10^{-6} in/in/°F, mean coefficient of thermal expansion for the SA-517, Grade P carbon steel spacer plate at 700°F

δ_2 = 0.053 in., maximum differential thermal expansion between the hottest carbon steel and stainless steel spacer plate hole centerlines
= $\delta_{SS} - \delta_{CS}$

δ_{CS} = 0.233 in., maximum diametral expansion of the hottest W21 carbon steel spacer plate, calculated by scaling maximum radial thermal expansion calculated for normal cold storage condition (T_{max} = 571°F) by the $\alpha\Delta T$ ratio for the maximum spacer plate temperature
= $(0.180)[(700 - 70)/(571 - 70)](\alpha_{CS,700}/\alpha_{CS,571})$

δ_{SS} = 0.286 in., maximum diametral expansion of the hottest W21 stainless steel spacer plate, calculated by scaling maximum radial thermal expansion calculated for normal cold storage condition (T_{max} = 576°F) by the $\alpha\Delta T$ ratio for the maximum spacer plate temperatures
= $(0.226)[(700 - 70)/(576 - 70)](\alpha_{SS,700}/\alpha_{SS,576})$

$\alpha_{CS,571}$= 7.27 x 10^{-6} in/in/°F, mean coefficient of thermal expansion for the SA-517, Grade P carbon steel spacer plate at 571°F

$\alpha_{SS,576}$= 9.00 x 10^{-6} in/in/°F, mean coefficient of thermal expansion for the SA-240, Type XM-19 stainless steel spacer plate at 576°F

$\alpha_{SS,700}$= 9.15 x 10^{-6} in/in/°F, mean coefficient of thermal expansion for the SA-240, Type XM-19 stainless steel spacer plate at 700°F

The nominal clearance between the guide tube O.D. and the spacer plate opening is 0.15 inches. The minimum clearance remaining between the guide tube and the spacer plate openings is 0.083 inches. Therefore, no transverse interference between the W21 guide tube assemblies and the spacer plates could occur.

The longitudinal differential thermal expansion between the guide tube assembly and the canister shell cavity are evaluated using hand calculations. The largest differential longitudinal thermal expansion between the guide tube and the canister shell results from the off-normal cold storage condition, since the temperature differential between the hottest guide tube and the canister shell is maximum for this condition. Therefore, a bounding differential longitudinal thermal expansion analysis is performed for the off-normal cold storage thermal condition. The evaluation is performed based on the temperature differential at the hottest axial section of the canister which is conservative because it assumes that the maximum gradient is maintained along the entire cavity length.

The axial thermal expansion (δ_L) of the guide tubes relative to the canister shell is calculated as follows:

$$\delta_L = L\left[\alpha_{gt}(T_{gt} - 70) - \alpha_{sh}(T_{sh} - 70)\right] = 0.52 \text{ inches}$$

where:

L = 180 inches, length of the longest canister shell cavity

T_{gt} = 550°F, maximum guide tube temperature for off-normal cold storage condition

α_{gt} = 9.51×10^{-6} in/in/°F, mean coefficient of thermal expansion for the guide tube (SA-240, Type 316) at 550°F

T_{sh} = 261°F, corresponding temperature of the canister shell

α_{sh} = 8.90×10^{-6} in/in/°F, mean coefficient of thermal expansion for the canister shell (SA-240, Type 304 stainless steel) at a lower bound temperature of 250°F

The W21 guide tubes are secured to the bottom end spacer plate and expand toward the top end of the basket. The nominal clearance provided between the top end of the guide tube and the top end of the canister cavity is 1.38 inches for all designs. The calculated longitudinal differential thermal expansion between the W21 guide tubes and canister shell is smaller than the nominal longitudinal clearance of 1.38 inches. Therefore, no axial interference between the guide tube and canister shell occurs for all normal, off-normal, and accident conditions.

Hence, the canister shell allows free thermal expansion of its internals in both diametral and axial directions for all normal conditions.

3.5.1.3 Thermal Stress Calculations

This section presents the FuelSolutions™ W21 canister stress analyses for the normal thermal loads. A combination of hand calculations and finite element analyses are used to determine the stresses in the affected canister components.

3.5.1.3.1 Canister Shell Assembly

Thermal stresses in the canister shell assembly are caused primarily by thermal gradients between the cylindrical shell and the top closure plates, and between the shell and the bottom closure plate. The highest stresses in the canister shell assembly result from the thermal condition producing the largest thermal gradients. A comparison of the shell assembly thermal gradients for the normal transfer and storage thermal conditions, for both the maximum thermal and maximum gradient heat load profiles, are provided in Table 3.5-2. These results show that the maximum W21 canister shell assembly thermal gradients result from the maximum gradient heat load profile for the normal cold thermal condition in the transfer cask. A bounding design thermal gradient is used for the thermal stress evaluation of the W21 canister shell assemblies. The bounding axial thermal gradient applied to the length of the canister shell is that of a fourth order polynomial equation developed based upon a curve fit of the canister shell temperatures for the off-normal cold transfer thermal condition for the canister with the maximum range of shell temperatures. A constant offset temperature is applied to the canister shell temperatures calculated using the polynomial equation to obtain a bounding canister shell temperature of 560°F. A comparison of the canister shell axial temperature profile from the thermal analysis and the applied bounding thermal gradient based on the polynomial equation is shown in Figure 3.5-1. For the canister shell radial temperature distribution, a bounding 60°F thermal

gradient is applied assuming a cubic variation of temperature versus radial distance from the canister centerline. In this manner, the applied thermal gradient bounds the three key characteristics of the canister shell thermal loading: maximum temperature, maximum axial gradient, and maximum radial gradient.

Thermal stresses in the "bounding" W21 canister shell assembly and in the W21T-LL canister shell assembly are calculated for the normal cold transfer thermal using the axisymmetric canister shell assembly finite element models described in Section 3.9.3.1. The models include the temperature dependent material properties of SA-240, Type 304 stainless steel material, corresponding to the weaker canister shell material.

As discussed in Article NB-3213.12 of the ASME Code,[21] thermal stresses are self-limiting in nature. General thermal stress associated with the gross distortion of the structure is classified as secondary stress. General thermal stresses are taken as the linearized membrane plus bending stress at each stress location. Local thermal stresses, which include peak stresses occurring at the structural discontinuities, do not produce any significant distortion in the canister shell assembly.

The bounding W21 canister shell general thermal stress intensities resulting from the bounding normal thermal gradient are summarized in Table 3.5-3. The results show that the W21 canister shell thermal stresses due to normal thermal loading are less than the Service Level A allowables.

3.5.1.3.2 Spacer Plate

The FuelSolutions™ W21 basket assembly ¾-inch thick carbon steel spacer plates and 2-inch thick stainless steel spacer plates are evaluated for thermal stresses resulting from the range of normal thermal conditions. The spacer plate thermal gradients resulting from normal thermal conditions in the storage cask and transfer cask are provided in Chapter 4 of this FSAR. Spacer plate thermal stresses result from radial thermal gradients which are highest for the spacer plates located in the middle of the basket assembly. The spacer plate radial thermal gradients are highest for the condition with the maximum internal heat generation rate and the lowest ambient air temperature. The spacer plate thermal stresses are approximately proportional to the difference between $\alpha E(T-70)$ at the maximum and minimum spacer plate temperatures. In order to identify the controlling thermal condition for the W21 carbon steel and stainless steel spacer plates, the difference between $\alpha E(T_{max}-70)$ and $\alpha E(T_{min}-70)$ is calculated for all normal cold and hot thermal conditions. The results show that the controlling thermal condition for both the W21 carbon steel and stainless steel spacer plates is the normal cold storage condition. Therefore, bounding thermal stress evaluations of the W21 carbon steel and stainless steel spacer plates are performed for the normal cold storage thermal condition.

The maximum general thermal stresses in the ¾-inch thick carbon steel spacer plate and 2-inch thick stainless steel spacer plate resulting from the radial thermal gradients due to the normal cold storage thermal condition are calculated using the plane stress finite element model described in Section 3.9.3.3, with the appropriate material properties and plate thickness. As discussed in Section 3.5.1.2.2, the spacer plates expand freely within the canister shell under all

[21] American Society of Mechanical Engineers (ASME) Boiler and Pressure Vessel Code, *Rules for Construction of Nuclear Power Plant Components*, Section III, Division 1, Subsection NB, "Class 1 Components," 1995 Edition.

normal thermal conditions. Consequently, the finite element model is pinned to prevent rigid body translation and allow free radial thermal expansion. The temperature dependent material properties of SA-517, Grade P[22] carbon steel and Type XM-19 stainless steel are used for the thermal stress analyses of the W21 carbon steel and stainless steel spacer plates, respectively. The normal cold storage thermal gradients are mapped into the finite element model for the hottest carbon steel and stainless steel spacer plates. The spacer plate thermal stresses are calculated using a linear-elastic static analysis.

The maximum general thermal stress intensity in the ¾-inch thick carbon steel spacer plate resulting from the normal cold storage thermal condition is 57.2 ksi. General thermal stress intensity, taken as the maximum membrane plus bending stress intensity, is classified as secondary. The Service Level A allowable secondary stress intensity for SA-517, Grade P or Grade F and A514, Grade P or Grade F carbon steels at 700°F are 112.5 ksi and 107.7 ksi, respectively. Therefore, the maximum general thermal stress intensity in the ¾-inch thick carbon steel spacer plate is less than the Service Level A allowable secondary stress intensity.

The maximum general thermal stress intensity in the 2-inch thick stainless steel spacer plate due to the normal cold storage thermal condition is 70.3 ksi. As discussed above, general thermal stress intensity is classified as secondary. The Service Level A allowable secondary stress intensity for SA-240, Type XM-19 stainless steel at 700°F is 86.4 ksi. Therefore, the maximum general thermal stress intensity in the 2-inch thick stainless steel spacer plate is less than the Service Level A allowable secondary stress intensity.

3.5.1.3.3 Support Rods and Support Sleeves

The W21M and W21T support rod and support sleeve stresses resulting from longitudinal differential thermal expansion of the basket assembly components are evaluated for normal thermal loading.

The W21M support rods and support sleeves are fabricated from Type XM-19 and Type 304L stainless steels, respectively. The W21T support rods and support sleeves are fabricated from SA-564, Grade 630 precipitation hardened stainless steel and SA-106, Grade C carbon steel, respectively. Since the support sleeve materials have higher coefficients of thermal expansion than the support rods, elevated temperatures cause the support sleeve to expand more than the support rods resulting in axial compressive stress in the support sleeves and tensile stress in the support rods. The stresses in the W21 support tubes and support sleeves due to longitudinal differential thermal expansion are calculated for the middle support rod segment of each W21M and W21T basket type, since the middle support rod segment is located at the hottest axial section of each basket assembly. A bounding service temperature of 600°F is conservatively assumed for the W21 support rod thermal stress evaluation.

The support rod and support sleeve stresses resulting from longitudinal differential thermal expansion are evaluated using hand calculations. The axial load in the support rod and support sleeves due to the differential thermal expansion is calculated based on the principal of static

[22] The carbon steel spacer plates are fabricated from either SA-517, Grades P or F or A514, Grade P carbon steel. The temperature-dependent material properties (i.e., E and α) of SA-517, Grade P and A514, Grades P or F carbon steel are identical. Therefore, the thermal stress analysis is valid for both material alternatives.

equilibrium. The axial load is equal to the product of the differential thermal expansion and the equivalent axial stiffness of the support rod, support sleeves, and spacer plates. The equivalent axial stiffness of the system is calculated assuming support sleeves and spacer plates act as springs in series, and together they act in parallel to the support rod axial stiffness. The axial compressive stress in the support sleeve and the axial tensile stress in the support rod are calculated for the longest support rod span in each W21M and W21T basket assembly.

The maximum axial load in the W21T support rods and sleeves is 33.95 kips, occurring in the W21T-SS basket assembly. This load results in a maximum axial tensile stress of 4.80 ksi in the support rod segments and a maximum axial compressive axial stress of 15.24 ksi in the support sleeves. The allowable primary plus secondary stress intensities for the W21T support rod SA-564, Grade 630 precipitation hardened stainless steel and the support sleeve SA-106, Grade C carbon steel at a design temperature of 600°F are 135.9 ksi and 59.1 ksi, respectively. Therefore, the maximum thermal stresses in the W21T support rods and sleeves due to normal thermal conditions are less than the corresponding Service Level A allowable stresses.

The maximum axial load in the W21M support rods and sleeves is 5.17 kips, occurring in the W21M-LD basket assembly. This load results in a maximum axial tensile stress of 0.73 ksi in the support rod segments and a maximum axial compressive stress of 2.32 ksi in the support sleeves. The allowable primary plus secondary stress intensities for the W21M support rod SA-479, Type XM-19 stainless steel and the support sleeve SA-312, Type 304L stainless steel at a bounding design temperature of 600°F are 87.6 ksi and 42.0 ksi, respectively. Therefore, the maximum thermal stresses in the W21M support rods and sleeves due to normal thermal conditions are less than the corresponding Service Level A allowable stresses.

The support rod threads are evaluated for the maximum support rod tensile force resulting from longitudinal differential thermal expansion between the support rods, support sleeves, and Type B spacer plates, as discussed above. The average shear stress in the support rod threads due to the maximum support rod tensile load is calculated as follows:

$$\tau = \frac{P_r}{A_{thread} L_{thread}}$$

where:

P_r = Support rod tensile load

A_{thread} = 3.456 in^2/inch, external thread shear area per unit length

L_{thread} = 1.75 in., minimum length of support rod thread engagement

The maximum axial load of 33.95 kips in the W21T support rods results in a support rod thread shear stress of 5.61 ksi. Similarly, the maximum axial load of 5.17 kips in the W21M support rods results in a support rod thread shear stress of 0.85 ksi. The membrane stress intensity in the support rod threads is equal to twice the shear stress, or 11.2 ksi for the W21T and 1.7 ksi for the W21M. The membrane stress intensity in the support rod threads due to differential thermal expansion is conservatively classified as primary. The corresponding Service Level A allowable primary membrane stress intensities are 45.3 ksi and 29.2 ksi, respectively. Therefore, the

stresses in the W21 support rod threads due to normal thermal conditions are lower than the corresponding Service Level A allowable primary membrane stress intensities.

In addition to the stress evaluation described above, the support sleeve axial compressive stresses due to normal thermal conditions are combined with the maximum support sleeves stressed due to dead weight and normal handling and evaluated for buckling in accordance with NUREG/CR-6322, as discussed in Section 3.5.5.2.

3.5.1.3.4 Guide Tubes

As shown in Section 3.5.1.2.2, the W21 guide tubes expand freely within the basket assembly and canister shell under all conditions. Therefore, thermal loading does not result in any stress in the W21 guide tubes.

3.5.1.4 Fatigue Evaluation

3.5.1.4.1 Shell Assembly

The canister confinement components, consisting of the cylindrical shell, top inner and outer closure plates, the bottom closure, and closure welds, are evaluated in accordance with the requirements of NB-3222.4(d). Specifically, the six criteria of NB-3222.4(d) are evaluated to demonstrate that a detailed analysis of the W21 canister shell for cyclical service is not required. These criteria are discussed below.

1. *Atmospheric to Service Pressure Cycle*: The maximum number of pressure cycles associated with startup and shutdown is limited to 30,000 for the W21 canister shell, based on the fatigue curve from Figure I-9.2.1 of the ASME Code for $3S_m$ = 51 ksi, where the lower bound value of S_m is conservatively taken as 17 ksi for the W21T canister shell Type 304 material design temperature of 550°F. The canister normal service includes one vacuum drying operation and one helium fill after closure. All other pressure fluctuations during storage are due to changes in atmospheric conditions. Hence, the canister is never cycled back to the atmospheric pressure during normal service. Therefore, the first criterion is satisfied.

2. *Normal Service Pressure Fluctuation*: The total number of pressure cycles is less than 10^6 because the pressure cycles only occur due to changes in the ambient temperature (assuming one cycle a day, obtain 1×365×100 =36,500 over the lifetime). As specified in this criterion, the value of S is determined for 10^6 cycles and is 28.3 ksi from Figure I-9.2.1 of the ASME Code. The design pressure is 10 psig. Therefore, the cut-off for the significant pressure fluctuation is:

$$\mathrm{SPF} = \tfrac{1}{3} \times \mathrm{DP} \times \left(S / S_m \right) = \tfrac{1}{3} \times 10 \times \left(28.3 / 17 \right) = 5.5\mathrm{psi}$$

   As shown in Chapter 4, the W21 canister shell internal pressure ranges from a minimum of 6 psig to a maximum of 10 psig for normal conditions. Hence, no significant pressure fluctuations are expected during storage. Therefore, the second criterion is satisfied.

3. *Temperature Difference - Startup and Shutdown*: The temperature difference between any two adjacent points on the canister shell during startup and shutdown is limited to:

$$S_a / 2E\alpha = 1{,}289\,^{\circ}\mathrm{F}$$

where S_a is determined to be 708 ksi from Figure I-9.2.1, conservatively based on 10 startup-shutdown cycles, and the values of E and α are conservatively taken as $28.9(10)^6$ psi and $9.5(10)^{-6}$ in/in/°F, respectively. Since the temperature difference between any two points in the canister never approaches this quantity, the third criterion is clearly satisfied.

4. *Temperature Difference - Normal Service*: As determined in (2) above, the value of S is 28.3 ksi. The significant temperature fluctuation is determined as:

$$\mathrm{STF} = 28.3 / 2(28{,}900)(9.5 \cdot 10^{-6}) = 51°\mathrm{F}$$

The normal service in this criterion does not include startups and shutdowns, hence, the only temperature variations are due to changes in the ambient conditions. As shown in Table 3.5-2, the temperature difference between any two points in the canister shell does not change significantly from normal cold to normal hot condition. Temperatures at all points drop uniformly by approximately 110°F. Therefore, there are no significant variations in the temperature gradient during normal service and the fourth criterion is satisfied.

5. *Temperature Difference - Dissimilar Materials*: The canister shell confinement components are fabricated entirely of Type 304 (W21T) or Type 316 (W21M) stainless steel. Hence, no dissimilar materials are used. Therefore, the fifth criterion is satisfied.

6. *Mechanical Loads*: The only significant mechanical loads during the canister service are those due to lifting and transfers. Conservatively estimating the number of these load fluctuations as 100, the S_a value is found to be 261 ksi (Table I-9.1 of the ASME Code). The mechanical loads do not exceed this value and, therefore, the sixth criterion is satisfied.

Therefore, fatigue is not a concern for the W21 canister shell assembly confinement boundary components.

3.5.1.4.2 Basket Assembly

The canister basket assembly components, consisting of the guide tubes, support rods, support sleeves, and spacer plates are evaluated in accordance with NG-3222.4(d) for fatigue. In accordance with NG-3222.4(d), these components do not need a detailed fatigue evaluation if the four specified criteria are satisfied. These criteria are discussed below.

1. *Temperature Difference - Startup and Shutdown*: The temperature difference between any two adjacent points on the canister basket assembly during startup and shutdown, excluding the stainless steel spacer plates, is limited to:

$$S_a / 2E\alpha = 680^\circ F$$

where S_a is determined to be 400 ksi from Figures I-9.1 and I-9.2.1 of the ASME Code, conservatively based on 10 startup-shutdown cycles, and the values of E and α are conservatively taken as $30(10)^6$ psi and $9.8(10)^{-6}$ in/in/°F, respectively.

As shown in Chapter 4, the temperature difference within any basket component does not exceed 400°F. All of these values are below 680°F. Therefore, the first criterion is satisfied.

2. *Temperature Difference - Normal Service*: The conservative value of S for 10^6 cycles is 12 ksi (Figures I-9.1 and I-9.2.1 of the ASME Code). The significant temperature fluctuation for all W21 basket assembly components except the stainless steel spacer plates is:

$$STF = 12 / 2(30{,}000)(9.8 \cdot 10^{-6}) = 20°F$$

As shown in Chapter 4, the temperature difference between any two points in the W21 basket assembly does not change significantly from normal cold to normal hot condition. The largest temperature difference within the W21 basket assembly occurs in the spacer plates. As shown in Section 4.4, the difference in the maximum spacer plate gradient for normal hot storage and normal cold storage is less than 20°F. Therefore, there are no significant variations in the temperature gradient during normal service. The second criterion is satisfied.

3. *Temperature Difference - Dissimilar Materials*: The cut-off value for significant temperature fluctuations in the W21M basket is determined as:

$$STF = \frac{S}{2(E_1\alpha_1 - E_2\alpha_2)} = \frac{12}{2\left(25{,}300 \cdot (9.60 \cdot 10^{-6}) - 26{,}700 \cdot (7.32 \cdot 10^{-6})\right)} = 126°F$$

where S = 12 ksi (from (2) above), and values for E and α are taken from Section 3.3.1 for the basket assembly material with the highest coefficient of thermal expansion (e.g., SA-240, Type 316 stainless steel) and the lowest coefficient of thermal expansion (e.g., SA-517, Grade P carbon steel) at the mean basket temperature of 600°F.

Similarly, for the W21T basket assembly, the significant temperature fluctuation is:

$$STF = \frac{S}{2(E_1\alpha_1 - E_2\alpha_2)} = \frac{12}{2\left(26{,}700 \cdot \left(7.32 \cdot 10^{-6}\right) - 26{,}100 \cdot \left(5.93 \cdot 10^{-6}\right)\right)} = 148°F$$

where S = 12 ksi (from (2) above), and values for E and α are taken from Section 3.3.1 for the basket assembly material with the highest coefficient of thermal expansion (e.g., SA-517, Grade P carbon steel) and the lowest coefficient of thermal expansion (e.g., SA-564, Grade 630 precipitation hardened stainless steel) at the mean basket temperature of 600°F, excluding the guide tubes since they expand freely within the basket assembly.

As shown in Section 4.4, the temperature fluctuation between normal cold storage and normal hot storage conditions is approximately 100°F. Therefore, only a very few significant temperature fluctuations per year are possible. Assuming the number of 10 per year and a canister lifetime of 100 years, there are 1000 significant temperature fluctuations over the life of the canister. The lower bound value of S_a is 78 ksi (Table I-9.1 of the ASME Code). The resulting allowable temperature range for all W21 basket assembly components except the stainless steel spacer plate is:

$$\frac{S_a}{2(E_1\alpha_1 - E_2\alpha_2)} = \frac{78}{2\left(25{,}300 \cdot \left(9.60 \cdot 10^{-6}\right) - 26{,}700 \cdot \left(7.32 \cdot 10^{-6}\right)\right)} = 822°F$$

This value is higher than the temperature difference in the basket during normal service. Therefore, the third criterion is satisfied.

4. *Mechanical Loads*: The only significant mechanical loads during the canister service are those due to transfers. Conservatively estimating the number of these load fluctuations as 100, the S_a value is found to be 175 ksi (Table I-9.1 of the ASME Code). The basket assembly stresses due to normal transfer loads do not exceed this value and, therefore, the fourth criterion is satisfied.

Therefore, fatigue is not a concern for the W21 basket assembly structural components.

3.5.2 Internal Pressure

The canister shell assembly is evaluated for internal pressure loads associated with canister loading operations (draining internal pressure) and normal on-site transport and storage conditions. These conditions are described and evaluated in the following sections.

3.5.2.1 Canister Draining Internal Pressure

After installation of the inner closure plate, a compressed gas pressure of 30 psig is applied to the canister cavity to speed the water draining process during canister closure operations, thus minimizing the personnel dose. The automated canister welder/opener and auxiliary shield plate, described in Section 1.2.1.4.1 of the FuelSolutions™ Storage System FSAR, are attached to the inner closure plate and a strongback is installed on the transfer cask top flange, as shown in Figure 1.2-14 of the FuelSolutions™ Storage System FSAR. The strongback and auxiliary shield plate provide structural support for the canister top inner closure plate and assure that no

permanent deformation of the inner closure plate results from the drainage pressure loading which could potentially interfere with the proper placement and installation of the outer closure plate.

The structural evaluation of the W21 canister shell assembly for the draining internal pressure load is performed using a combination of hand calculations and finite element analysis. Hand calculations are used to determine the bending stiffness of the strongback support beams which are used to support the canister top inner closure plate. The lower bound stiffness of the two 10x5x5/8 structural tubes which support the canister top inner closure plate is calculated assuming the beams are simply supported with a concentrated force applied at the mid-span, as follows:

$$K = 2\left(\frac{P}{\delta}\right) = 2\left(\frac{48EI}{l^3}\right) = 2.16\text{x}10^6 \text{ lb/in.}$$

where:

E = $27\text{x}10^6$ psi, Elastic modulus of structural steel.

I = 183 in^4, Moment of inertia for a 10x5x5/8 tube section per AISC.

l = 60.4 in., Span length of strongback beam.

The canister shell stresses due to the 30 psig canister draining pressure condition are calculated using an axisymmetric canister shell model which is essentially the same as the “bounding” axisymmetric finite element model described in Section 3.9.3.1. The top outer closure plate is not included in the model since it is not installed during the blowdown pressure condition. The auxiliary shield plate is not included in the canister shell finite element model, conservatively neglecting the structural support it provides to the inner closure plate. Instead, a resisting force of the strongback is modeled as a linear spring with the stiffness calculated above, which is attached to the canister top inner closure plate at the location of the auxiliary shield plate inner ring (i.e., R = 20.2 inches). A uniform pressure load of 30 psig is applied to the inner surface of the inner closure plate and the cylindrical shell. In addition, a 1*g* vertical acceleration is applied to the model to account for the self-weight of the canister shell assembly. The weight of the auxiliary shield plate and welding machine are conservatively ignored for this calculation.

The canister shell assembly results for the water draining internal pressure condition are summarized in Table 3.5-3. The analysis results show that the maximum stress intensities in the canister shell assembly components and welds due to the water draining pressure loading are below the Service Level A allowable stress intensities.

3.5.2.2 Normal Transfer and Storage Internal Pressure

The maximum canister internal pressures are calculated in Section 4.4.1.9 of this FSAR under the most severe normal transfer and storage conditions. The maximum canister internal pressure for normal conditions is 10 psig. The bounding W21 canister shell assemblies are evaluated for the 10 psig normal internal pressure load using the axisymmetric finite element models described in Section 3.9.3.1. Two different W21 canister shell assembly configurations are evaluated as discussed in Section 3.1.1.1. These are the “bounding” canister shell assembly, which provides

bounding stress results for all W21 canister shell assemblies except the W21T-LL as discussed in Section 3.1.1.1, and the W21T-LL canister shell assembly. For the normal internal pressure condition, canister shell assembly stresses are determined for internal pressure loads acting on the top inner and outer closures independently. The bounding W21 canister shell stresses resulting from the 10 psig normal internal pressure load acting on the canister shell assembly components and welds are summarized in Table 3.5-3. The results show that the maximum canister shell stress intensities resulting from the normal internal pressure load are less than the Service Level A allowables.

3.5.3 Dead Weight Load

The canister is transferred in the vertical or horizontal orientations and stored in the vertical orientation. This section presents the structural evaluation of the canister structural components for dead weight loads in both the vertical and horizontal orientations.

3.5.3.1 Canister Shell Assembly

3.5.3.1.1 Vertical Dead Weight

The FuelSolutions™ W21 canister shell assemblies are evaluated for the vertical dead weight loading associated with normal transfer and storage. For the vertical dead load condition, the bottom end of the canister assembly rests on either the transfer cask bottom cover plate or the storage cask canister support tubes, as described in Section 1.2.1 of the FuelSolutions™ Storage System FSAR. For both conditions, the support conditions are nearly uniform over the entire bottom surface of the canister shell assembly. Therefore, a single vertical dead weight analysis is performed for each of the controlling W21 canister shell assembly configurations assuming uniform support over its bottom end.

Bounding vertical dead weight evaluations are performed for the most limiting FuelSolutions™ W21 canister shell assembly class and type. Two bounding canister shell configurations are identified, as discussed in Section 3.1.1.1. These include the “bounding” canister shell, which bounds all W21 canister shell assemblies except for the W21T-LL, and the W21T-LL canister shell assembly.

The dead weight of the spent fuel assemblies and canister basket assembly is modeled as a uniform pressure load across the inner surface of the bottom closure plate. As shown in Table 3.1-2, a bounding weight of 57 kips is used for the combined weight of the spent fuel assemblies and the canister basket assembly for the “bounding” canister shell assembly vertical dead weight analysis. Similarly, a bounding weight of 51 kips is used for the combined weight of the basket assembly and fuel for the W21T-LL canister shell vertical dead weight analysis. A unit vertical acceleration is applied to the analytical model to account for the self-weight of the canister shell assembly.

The bounding W21 canister shell vertical dead weight stress intensities are summarized in Table 3.5-3. The results show that the maximum W21 canister shell stresses due to vertical dead weight loading are less than the corresponding Service Level A allowable stresses.

3.5.3.1.2 Horizontal Dead Weight

The W21 canister is supported by two rails in the transfer cask or storage cask when in the horizontal orientation. The centerline of the rails in both the transfer cask and the storage cask are located at 22.5° on either side of the bottom centerline of the canister. The cask rails provide continuous support along the entire length of the canister. Since the canister support conditions provided by the transfer cask and storage cask rails are identical, only one horizontal dead weight evaluation is performed for the W21 canister shell.

The horizontal dead weight analysis is performed using the half-symmetry three-dimensional finite element model described in Section 3.9.3.2 and shown in Figure 3.9-5. The loading is applied as a 1*g* vertical acceleration, which is reacted at the support rails. The resulting maximum stress intensities in the canister shell assembly due to horizontal dead weight are summarized in Table 3.5-3. The results show that the maximum stress intensities in the W21 canister shell due to horizontal dead weight are less than the corresponding Service Level A allowable stress intensities.

3.5.3.2 Support Rods and Support Sleeves

3.5.3.2.1 Vertical Dead Weight

The maximum stresses in the most highly loaded W21 support rods and support sleeves due to the vertical dead weight loads are calculated by scaling the maximum support rod and support sleeve stresses calculated for the storage cask end drop condition in Section 3.7.3.2.2 by the ratio of the applied loads. The W21 support rod end drop evaluation is performed for end drop accelerations of 20*g* with the guide tubes attached to the bottom end spacer plate and 50*g* without the guide tubes attached to the bottom end spacer plate.

The maximum vertical dead weight stresses in the W21 support rods occur at the bottom end of the basket assembly, where the support rods are loaded by the entire weight of the basket assembly, including the weight of the guide tube assemblies. The maximum support rod vertical dead weight stresses are determined by scaling the maximum support rod stresses calculated for the 20*g* end drop load with the guide tubes attached to the bottom end spacer plate by 1*g*/20*g*. The W21 support sleeve vertical dead weight stresses are determined by scaling the maximum support sleeve stresses due to the 50*g* bottom end drop by 1*g*/50*g*. The maximum vertical dead weight stresses in the most highly loaded W21 support rod segment and support sleeve are presented in Table 3.5-4 along with the corresponding Service Level A allowable stress intensities for the weakest W21 support rod and support sleeve materials. The results show that the W21 support rods and sleeves meet the Service Level A allowable stress design criteria for vertical dead weight load conditions.

3.5.3.2.2 Horizontal Dead Weight

Each support rod is loaded only by its own weight under horizontal deadweight loading. The horizontal dead weight stresses in all W21 support rod assembly designs are determined by scaling the maximum stresses calculated for the 60*g* transfer cask side drop load by the ratio 1*g*/60*g*. The resulting W21 support rod and support sleeve horizontal dead weight stresses are reported in Table 3.5-4. The results show that the maximum stress intensities in the W21 support

rods due to horizontal dead weight are less than the corresponding Service Level A allowable stress intensities for the weakest support rod and support sleeve materials.

3.5.3.3 Spacer Plates

The FuelSolutions™ W21 canister basket assembly spacer plate stresses due to dead weight in the vertical and horizontal orientations meet the stress acceptance criteria of Subsection NG for Service Level A, as defined in Section 3.1.2. Table 3.5-4 summarizes the maximum spacer plate stresses due to vertical and horizontal dead load.

3.5.3.3.1 Vertical Dead Weight

When oriented vertically, the W21 spacer plates are supported by the eight (8) support rod assemblies. With the exception of the bottom end spacer plate, all W21 spacer plates are loaded only by their own weight. The bottom end spacer plate supports the weight of all 21 guide tube assemblies in addition to its own weight since the guide tube assemblies are attached to the bottom end spacer plate with welded clip-angles. The SNF assemblies are supported by the canister shell bottom closure plate and do not load the W21 spacer plates under vertical dead weight loading.

The stresses in the W21 spacer plates for vertical dead weight loading are evaluated using finite element methods. The vertical dead weight stress evaluations are performed for a single ¾-inch thick carbon steel spacer plate and a single 2-inch thick stainless steel spacer plate under their own self weight using the finite element model described in Section 3.9.3.3.2. In addition, the 2-inch thick bottom end stainless steel spacer plate is evaluated for the combined weight of guide tube assemblies in addition to its self weight.

The maximum primary membrane plus bending (P_m+P_b) stress intensity resulting from vertical dead weight loading is 291 psi. The maximum total stress intensity in the spacer plate, which is conservatively classified as primary plus secondary (P_m+P_b+Q), is 713 psi. The Service Level A allowable primary membrane, primary membrane plus bending, and primary plus secondary stress intensities for the carbon steel spacer plate material at 700°F are 35.9 ksi, 53.9 ksi, and 107.7 ksi, respectively. Therefore, the maximum primary membrane, membrane plus bending, and primary plus secondary stress intensities in the W21 carbon steel spacer plates due to vertical dead weight loading are less than the corresponding Service Level A allowable stress intensities.

The W21 stainless steel spacer plates, except for the bottom end spacer plate, are loaded only by their own weight for vertical dead weight load condition. Thus, the load applied to the model is a 1*g* longitudinal acceleration. The maximum primary membrane plus bending (P_m+P_b) stress intensity resulting from vertical dead weight loading is 121 psi. The maximum total stress intensity in the spacer plate, which is conservatively classified as primary plus secondary (P_m+P_b+Q), is 236 psi. The Service Level A allowable primary membrane, primary membrane plus bending, and primary plus secondary stress intensities for SA-240, Type XM-19 stainless steel at 700ºF are 28.8 ksi, 43.2 ksi, and 86.4 ksi, respectively. Therefore, the maximum primary membrane, membrane plus bending, and primary plus secondary stress intensities in the W21 stainless steel spacer plates due to vertical dead weight loading are less than the corresponding Service Level A allowable stress intensities.

The W21 bottom end spacer plate supports its own weight plus the weight of all 21 guide tube assemblies. The heaviest W21 guide tubes are those in the W21M-LD canister, weighing a maximum of 209.5 pounds each. A bounding guide tube weight of 210 pounds is conservatively used for the bottom end spacer plate vertical dead weight analysis. Each W21 guide tube assembly is attached to the bottom end spacer plate with two attachment brackets located at opposing corners of the spacer plate opening. A force of 105 pounds is applied to the bottom end spacer plate for each guide tube attachment location. In addition, a 1*g* acceleration load is applied to the model to account for the spacer plate self weight. The maximum primary membrane plus bending (P_m+P_b) stress intensity in the bottom end spacer plate resulting from vertical dead weight loading is 1,314 psi. The maximum total stress intensity in the bottom end spacer plate, which is conservatively classified as primary plus secondary (P_m+P_b+Q), is 1,939 psi. The Service Level A allowable primary membrane, primary membrane plus bending, and primary plus secondary stress intensities for SA-240, Type XM-19 stainless steel at 500°F are 29.7 ksi, 44.6 ksi, and 89.1 ksi, respectively. Therefore, the maximum primary membrane, membrane plus bending, and primary plus secondary stress intensities in the W21 bottom end stainless steel spacer plate due to vertical dead weight loading are less than the corresponding Service Level A allowable stress intensities.

3.5.3.3.2 Horizontal Dead Weight

For the horizontal dead weight load condition, the W21 basket assembly spacer plates provide structural support for their own weight in addition to the weight of the SNF assemblies, guide tube assemblies, and support rod assemblies. The basket assembly spacer plates are supported by the canister shell and the canister shell is supported by two cask rails. Under relatively low magnitude loads such as horizontal dead weight, the weight of the SNF assemblies is conservatively assumed to load the W21 guide tubes only at the locations of the fuel assembly grid spacers. Since the W21 canisters are designed for a range of fuel types, the total SNF assembly weight tributary to each grid spacer and the location of the grid spacers relative to the basket assembly spacer plates can vary. The worst case loading for each W21 spacer plate results from the SNF fuel with the highest grid spacer tributary weight for the fuel assembly grid spacer located directly over that spacer plate.

The largest grid spacer tributary weight has been determined to be 256.9 pounds for the Westinghouse 15x15 fuel with control components, which is accommodated in the W21M-SD or W21T-SL basket assemblies. Although the W21M-LD and W21T-LL basket assemblies have larger spacer plate pitches, the maximum grid spacer tributary weight for these canister types is only 143.3 pounds. Thus, bounding W21 spacer plate horizontal dead weight stress analyses are performed for the W21M-SD carbon steel and stainless steel spacer plates in the mid-region of the basket assembly, since these spacer plates support the largest loads.

The structural evaluation of the W21 spacer plates for the horizontal dead weight condition is performed using the ½-symmetry multi-span plane-stress finite element model described in Section 3.9.3.3.3. This model includes three spacer plates; the center spacer plate over which the fuel grid spacers are assumed to be positioned, and the adjacent spacer plates on either side. For the W21 carbon steel horizontal dead weight analysis, all spacer plates are assumed to be ¾-inch thick carbon steel plates. For the W21 stainless steel horizontal dead weight analysis, the center spacer plate is modeled as a 2.00-inch thick stainless steel plate and the adjacent plates are modeled as ¾-inch thick carbon steel plates.

The W21 spacer plate horizontal dead weight evaluation is performed assuming that the spacer plates are supported radially only at the cask rail locations, conservatively neglecting the support provided by the canister shell between the cask rails. Symmetry boundary constraints are applied to the model nodes along the vertical centerline and at the "cut" edges of the guide tubes.

The horizontal dead weight loads are applied to the finite element models as described in Section 3.9.3.3.3. The model loading includes the self-weight of the W21 spacer plates and guide tubes, the weight of the support rods and support sleeves tributary to each spacer plate, and the fuel assembly weights. The self-weight of the spacer plates and guide tubes are included in the model and accounted for by applying a 1*g* vertical (Y-axis) acceleration to the model. The support rod and sleeve tributary weights are applied as concentrated loads on each spacer plate. The fuel weight is applied as a concentrated load to the guide tube directly above the center spacer plate in the model, as discussed above.

The maximum primary membrane (P_m) and primary membrane plus bending (P_m+P_b), stress intensities in the most highly loaded W21 carbon steel spacer plate for the horizontal dead weight loading are 1.81 ksi and 4.32 ksi, respectively. The maximum total stress intensity in the most highly loaded W21 carbon steel spacer plate, which is conservatively classified as primary plus secondary (P_m+P_b+Q), is 6.28 ksi. The Service Level A allowable primary membrane, primary membrane plus bending, and primary plus secondary stress intensities for the carbon steel spacer plate material at 700°F are 35.9 ksi, 53.9 ksi, and 107.7 ksi, respectively. Therefore, the maximum primary membrane, membrane plus bending, and primary plus secondary stress intensities in the most highly loaded W21 carbon steel spacer plate due to horizontal dead weight loading are less than the corresponding Service Level A allowable stress intensities.

The maximum primary membrane (P_m) and primary membrane plus bending (P_m+P_b), stress intensities in the most highly loaded W21 stainless steel spacer plate for the horizontal dead weight loading are 0.80 ksi and 1.91 ksi, respectively. The maximum total stress intensity in the most highly loaded W21 stainless steel spacer plate, which is conservatively classified as primary plus secondary (P_m+P_b+Q), is 2.77 ksi. The Service Level A allowable primary membrane, primary membrane plus bending, and primary plus secondary stress intensities for SA-240, Type XM-19 stainless steel at 700°F are 28.8 ksi, 43.2 ksi, and 86.4 ksi, respectively. Therefore, the maximum primary membrane, membrane plus bending, and primary plus secondary stress intensities in the most highly loaded W21 stainless steel spacer plate due to horizontal dead weight loading are less than the corresponding Service Level A allowable stress intensities.

3.5.3.4 Guide Tubes

3.5.3.4.1 Vertical Dead Weight

When oriented vertically, the FuelSolutions™ W21 guide tube assemblies are supported by the bottom end spacer plate and are loaded by only their own weight. Each W21 guide tube assembly is attached to the bottom end spacer plate with two attachment brackets. The attachment brackets are designed to support the W21 guide tubes under normal conditions. The heaviest W21 guide tube assemblies are those in the W21M-LD canister, weighing 210 pounds each. Therefore, each W21 guide tube attachment bracket supports a maximum vertical dead weight load of 105 pounds.

The maximum axial compressive stress across the guide tube due to vertical dead weight, occurring near the bottom end, is calculated as follows:

$$f_a = \frac{P}{A} = 0.1 \text{ ksi}$$

where:

P = 210 lb., Maximum W21 guide tube assembly weight

A = 2.71 in^2, W21 guide tube cross-section area

The Service Level A allowable primary membrane stress intensity for SA-240, Type 316 stainless steel at 700°F is 16.3 ksi. Therefore, the W21 guide tubes meet the Service Level A allowable stress design criteria for the vertical dead weight condition.

The W21 guide tube attachment brackets are designed with a 5/16-inch wide "necked-down" section. Under vertical dead weight loading, the guide tube attachment bracket behaves like a guided cantilever beam, conservatively assuming that the bracket is fixed from rotating at the location of the attachment welds. The controlling vertical dead weight stresses in the attachment bracket base material occur at this section. The shear and bending stresses in the attachment bracket due to vertical dead weight loading are calculated as follows:

$$\tau = \frac{V}{A_v} = 2.84 \text{ ksi}$$

$$\sigma = \frac{M}{S} = \frac{Ve}{2S} = 16.94 \text{ ksi}$$

where:

V = 105 lb., Maximum load per attachment bracket

e = 0.24 in., Moment arm from end of welded tab to center of thinnest section
= 1.1 - 0.8 - 0.12/2

A_v = 0.037 in^2, bt, Attachment bracket shear area

S = 7.44×10^{-4} in^3, $bt^2/6$, Attachment bracket section modulus

The maximum primary membrane stress intensity in the guide tube attachment bracket is equal to twice the shear stress, or 5.7 ksi. The maximum primary membrane plus bending stress intensity is the guide tube attachment bracket is calculated as follows:

$$P_m + P_b = \sqrt{\sigma^2 + 4\tau^2} = 17.9 \text{ ksi}$$

The Service Level A allowable primary membrane and primary membrane plus bending stress intensities for SA-240, Type 316 stainless steel at 500°F are 18.0 ksi and 27.0 ksi, respectively. Therefore, the W21 guide tube attachment brackets meet the Service Level A allowable stress design criteria for the vertical dead weight condition.

The W21 guide tube attachment brackets are welded to the guide tube with 0.5-inch long full depth (t_w = 0.12-inch) fillet welds on both sides of each attachment bracket leg. The welds between the attachment bracket and guide tube are loaded in pure shear under vertical dead weight conditions. The shear stress in the guide tube to attachment bracket weld is calculated as follows:

$$f_v = \frac{V}{A_v} = 1.24 \text{ ksi}$$

where:

V = 105 lb., Maximum load per attachment bracket

A_w = 0.085 in^2, Weld shear area
= $(0.707 \times t_w)(2d)$

d = 0.50 in., Weld length at sides of attachment bracket leg.

The welds between the long leg of the attachment bracket and bottom end spacer plate consists of 0.8-inch long by 0.12-inch fillet welds on both sides of the attachment bracket plus an all-around 0.12-inch fillet weld inside the 0.38-inch diameter hole. The welds between the attachment brackets and bottom end spacer plate support both a direct shear and bending moment under vertical dead weight conditions. The maximum shear stress in the attachment bracket to bottom end spacer plate welds due to vertical dead weight loading is calculated as follows:

$$f_v = \frac{V}{A_v} + \frac{Mc}{I_w} = \frac{V}{A_v} + \frac{(Ve)(l/2)}{I_w} = 3.40 \text{ ksi}$$

where:

V = 105 lb., Maximum load per attachment bracket

A_w = 0.237 in^2, Weld shear area
= $(2l + \pi D)(0.707 \times t_w)$

e = 0.64 in., Moment arm to centroid of weld
= 1.1 - 0.12/2 - 0.4

I_w = 0.0091 in^3, Weld moment of inertia
= $0.707 t_w \times [l^3/6 + \pi D^3/8]$

l = 0.8 in., Weld length at sides of attachment bracket leg

D = 0.38 in., Hole diameter in bracket

The Service Level A allowable primary shear stress for SA-240, Type 316 stainless steel at 500°F is 10.8 ksi. For the attachment bracket welds, a 40% weld efficiency factor is applied in accordance with Table NG-3352-1 of the ASME Code for a single fillet with surface PT examination. Therefore, the allowable weld shear stress is 4.3 ksi. Therefore, the W21 guide tube attachment bracket welds meet the Service Level A allowable stress design criteria for the vertical dead weight condition.

3.5.3.4.2 Horizontal Dead Weight

The W21 guide tube assembly is loaded by its own weight and the weight of the contained fuel assembly for the horizontal dead weight condition. The spacer plate ligaments provide vertical support along the bottom face of the guide tube assembly. The horizontal dead weight structural evaluation of the W21 guide tubes considers two bounding conditions for the fuel loading on the guide tube: (1) uniform fuel load assumption (i.e., SNF assembly load applied as a uniform pressure load over the supporting face of the guide tube), and (2) concentrated load at SNF assembly grid spacers.

Uniform Fuel Loading

For the uniform fuel loading condition, the stresses in the most highly loaded W21 guide tube span for horizontal dead weight loading, assuming the weight of the SNF assembly is applied to the bottom panel of the guide tube assembly, are determined by scaling the maximum guide tube stresses for a 60*g* side drop load by 1/60. These stresses are bounded by the W21 guide tube horizontal dead weight stresses calculated for the concentrated fuel load assumption.

The W21 guide tubes can be fabricated as a seamless tube or with full penetration longitudinal seam weld(s). The longitudinal seam weld in the guide tube can be positioned in either of the following ways: (1) when a surface liquid penetration examination (PT) only is performed, it is required that the weld be positioned at ¼ panel width, or (2) when both a Radiographic Examination (RT) and a PT are performed, the seam weld can be positioned anywhere in the guide tube.

When PT only is performed, the weld located at ¼ panel width is designed by applying a conservative weld quality factor of 0.60 (per Table NG-3352-1 of the ASME Code, the weld quality factor is 0.65). When both RT and PT are performed, a weld quality factor of 1.0 is appropriate (per Table NG-3352-1 of the ASME Code), and, therefore, the seam weld is automatically qualified by the qualification of the guide tube base metal. The longitudinal seam weld stresses in the remaining sections refer to the welds located at ¼ panel width.

The W21 guide tube longitudinal seam weld stress due to horizontal dead weight loading is again determined by scaling the maximum weld stresses calculated for a 60*g* side drop load by 1/60. The resulting primary membrane and primary membrane plus bending stresses in the seam weld are also found to be bounded by the stresses calculated for the concentrated fuel load assumption.

Concentrated Loading at Fuel Grid Spacer Locations

In addition to the uniform fuel loading assumption, the fuel assembly dead weight is assumed to be applied to the guide tube as concentrated loads at the location of the SNF grid spacers. As discussed in Section 3.5.3.3.2, the highest grid spacer tributary weight of 256.9 pounds occurs in

the WE 15x15 fuel with control components, which is accommodated within the W21M-SD or W21T-SL basket assemblies. Although other basket assemblies have a slightly larger spacer plate spacing, the stresses in the W21M-SD or W21T-SL basket assembly guide tubes bound all others. Therefore, the analysis is based on the W21M-SD/W21T-SL guide tubes.

The horizontal dead weight stress analysis of the W21 guide tube is performed using the ½-symmetry multi-span finite element model. The SNF assembly dead weight load is applied as a uniform pressure over the area of the guide tube bottom panel which supports the SNF assembly grid spacer. The depth of the WE 15x15 in-core grid spacer varies from 1.50 inches for the standard design to 2.25 inches for the optimized fuel assembly. The smaller grid spacer depth will result in the highest guide tube stresses since the resulting pressure load is higher and the load is more concentrated at the guide tube mid-span. Therefore, a bounding horizontal dead weight stress evaluation is performed for the 1.50-inch deep grid spacer.

The maximum stress intensity at the middle fiber of the guide tube shell elements, which is conservatively classified as primary membrane, is 1.1 ksi. The maximum stress intensity at the extreme fibers of the guide tube shell elements (i.e., top and bottom fibers) is 16.8 ksi. This stress intensity is localized at the corner of the area supporting the fuel grid spacer. As such, it is classified as primary plus secondary since local yielding would relieve the stress without resulting in significant distortion. The primary membrane plus bending stress intensity is taken as the average stress along the outer edge of the area supporting the grid spacer, or 10.3 ksi. The Service Level A allowable primary membrane (P_m), primary membrane plus bending (P_m+P_b), and primary plus secondary (P_m+P_b+Q) stress intensities for SA-240, Type 316 stainless steel at 700°F are 16.3 ksi, 24.5 ksi, and 48.9 ksi, respectively. Therefore, the W21 guide tube stresses meet the Service Level A allowable stress design criteria for the horizontal dead weight condition assuming a concentrated fuel load at the grid spacer.

The stresses in the W21 guide tube longitudinal seam weld at ¼ panel width due to the horizontal dead weight load for the concentrated fuel load assumption are also evaluated using the finite element solution. The guide tube longitudinal seam welds are located at either the ¼ span of the panel width when only surface PT is performed or anywhere in the panel when both RT and PT are performed. The results show that the maximum primary membrane and primary membrane plus bending stress intensities in the W21 guide tube longitudinal seam weld due to horizontal dead weight loading (concentrated fuel load assumption) are 399 psi and 578 psi, respectively. The Service Level A allowable primary membrane (P_m) and primary membrane plus bending (P_m+P_b) stress intensities for SA-240, Type 316 stainless steel at 700°F are 16.3 ksi and 24.5 ksi, respectively. In accordance with Table NG-3352-1 of the ASME Code, the efficiency factor for a full-penetration weld with surface PT examination is 0.65. However, a conservative 60% weld efficiency factor is applied to the allowable stresses for a full penetration weld with surface PT examination, and thus, the W21 guide tube seam weld Service Level A allowable primary membrane and primary membrane plus bending stress intensities are 9.8 ksi and 14.7 ksi. Therefore, the W21 guide tube seam weld stresses meets the Service Level A allowable stress design criteria for the horizontal dead weight condition assuming a concentrated fuel load at the grid spacer.

3.5.4 Normal Handling

This section provides the structural evaluation for normal handling of the loaded FuelSolutions™ W21 canister. The FuelSolutions™ Storage System is designed to transfer the canister both vertically and horizontally between the transfer cask, storage cask, and transportation cask, as described in Section 1.2.2 of the FuelSolutions™ Storage System FSAR. Three normal handling load conditions are evaluated for the FuelSolutions™ W21 canister as defined in Section 2.3.1.4: 1) vertical canister transfer handling, 2) horizontal canister transfer handling, and 3) on-site transport. Vertical canister transfer handling loads are equal to the dead weight of the canister plus an additional 15% increase to account for impulsive loading due to crane hoist motion in accordance with CMAA #70[23] recommendations. Horizontal canister transfer handling loads are equal to a hydraulic ram force of 45 kips applied to the top or bottom end of the canister and opposed by friction forces developed between the canister shell and the cask guide rails when the canister is transferred horizontally between casks, as defined in Section 2.3.1.4.

On-site transport shock and vibration loads are those encountered while towing the transfer trailer between the fuel building and ISFSI. The magnitude of shock and vibration loading experienced by the canister is insignificant due to the vibration isolation provided by the transfer trailer tires, described in Section 1.2.1.4.2 of the FuelSolutions™ Storage System FSAR, and the slow speed at which it is towed. Design basis on-site transport shock and vibration loads of ±0.6*g* vertical, ±0.3*g* longitudinal, and ±0.2*g* lateral are conservatively used to provide a bounding structural evaluation, consistent with Section 2.3.1.4. The structural evaluation of the canister components for the normal vertical transfer and horizontal transfer handling loads is presented in the following sections.

3.5.4.1 Vertical Canister Transfer

3.5.4.1.1 Shell Assembly

storage cask using canister vertical lift fixture and/or an overhead crane, as described in Section 1.2.2.4 of the FuelSolutions™ Storage System FSAR. The loaded canister is supported by a pintle plate which is bolted to the top outer closure plate. The pintle plate distributes the lifting load to the perimeter of the outer closure plate and provides structural support for the outer closure plate. Of primary concern for this lift condition is the structural integrity of the canister shell assembly components in the top end region through which the lifting load is transferred.

As discussed in Section 3.1.1.1, three W21 canister assembly configurations are considered to be the most limiting for the structural analysis. These are the “bounding” canister shell assembly, which bounds all W21 canister shell assemblies with the exception of the W21T-LL, and W21T-LL canister shell assembly. The structural analysis of the W21 canister shell assembly designs for the handling loads is performed using the axisymmetric finite element models described in Section 3.9.3.1. The canister shell axisymmetric finite element models do not

[23] CMAA Specification #70, *Specification for Electric Overhead Traveling Cranes*, Crane Manufacturers Association of America, Inc., 1988.

include the vertical lift plate which bolts to the top outer closure plate, conservatively ignoring the additional structural support it provides to the top outer closure plate.

The vertical lifting load is equal to dead weight of the dry loaded canister, plus an additional 15% to account for dynamic loads due to crane hoist motion. For each of the two bounding canister shell configurations, a bounding content weights (i.e., combined basket assembly and fuel deadweight) of 57 kips is conservatively assumed for the "bounding" canister shell model and 51 kips for the W21T-LL canister shell model. With the additional 15% factor for dynamic effects, these weights are increased to 65.6 kips and 58.7 kips, respectively. The load on the shell assembly due to the weight of the basket assembly and fuel is modeled as a uniform pressure over the inside of the bottom closure plate. A 1.15*g* vertical acceleration is applied to account for the self-weight of the canister shell assembly plus 15% for dynamic effects.

The bounding stresses in the W21 canister shell assemblies are summarized in Table 3.5-3. The results show that the maximum stresses in the W21 canister shell assembly due to the vertical canister transfer condition are less than the corresponding Service Level A allowable stresses.

The W21 canister shell top outer closure plate and its weld to the canister shell are evaluated in Section 3.4.3 and shown to provide factors of safety greater than 5 against yield and 10 against ultimate, in accordance with ANSI N14.6.

3.5.4.1.2 Basket Assembly

For vertical canister transfer handling conditions, the canister basket assembly loading and boundary conditions are identical to those for the vertical dead weight condition. The stresses in the W21 canister basket assembly due to vertical canister transfer handling loads are equal to 15% of those calculated for vertical dead weight to account for dynamic loads due to crane hoist motion. The W21 basket assembly stresses for the 1.15*g* vertical dead weight plus handling load are equal to 1.15 times the maximum basket assembly stresses due to vertical dead weight. The canister basket assembly stresses due to vertical canister transfer handling loads are presented in Table 3.5-4. The results show that the canister basket assembly stresses due to these handling loads are less than the Service Level A allowable stresses.

3.5.4.2 Horizontal Canister Transfer

In normal or routine handling, the canister is transferred horizontally between the transfer cask and storage cask or transfer cask and transportation cask using a hydraulic ram and pintle system. The forces developed in the hydraulic ram result from friction forces between the canister shell and the transfer cask, storage cask, or transportation cask support rails. For normal transfer operations, the coefficient of friction between the canister shell and the rails is conservatively assumed to be 0.5. The magnitude of the pulling force in the hydraulic ram due to the sliding friction force between the canister shell and the support rails is conservatively based on a bounding canister weight of 90,000 pounds. The resulting pulling force is 45,000 pounds.

The canister handling loads due to horizontal canister transfer affect only the canister shell assembly. For horizontal canister transfer conditions in which the canister assembly is pushed by the hydraulic ram, as described in the FuelSolutions™ Storage System FSAR, the canister top outer closure plate and bottom end plate are backed by the shield plugs and the top inner closure plate and the bottom closure plate. The support provided by the top inner closure plate and bottom closure plate, and shield plugs minimizes the stresses in the outer plates and welds. Even

if no structural credit is taken for the backing support provided by the shield plugs, the stresses in the canister shell end plates due to horizontal push forces will be less than or equal to those due to horizontal pull forces since the pushing loads are opposed by internal pressure. When the canister assembly is pulled, the hydraulic ram forces are transferred to the canister shell assembly through a pintle plate which is bolted to the top outer closure plate or bottom end plate. The top outer closure plate or bottom end plate, and the plate to shell welds support the entire load. Therefore, the canister shell assembly stresses are highest for the horizontal canister transfer condition in which the canister is pulled. The canister basket assembly is not affected by the horizontal transfer ram load. Therefore, no structural evaluation of the canister basket assembly is performed for handling loads due to horizontal canister transfer.

As discussed in Section 3.1.1.1, two W21 canister assembly configurations are considered to be the most limiting for the structural analysis. These are the “bounding” canister shell assembly, which bounds all W21 canister shell assemblies except the W21T-LL, and W21T-LL canister shell assembly. The structural analysis of the W21 canister shell assembly designs for the horizontal canister transfer handling loads is performed using the axisymmetric finite element models described in Section 3.9.3.1. Two horizontal transfer stress analyses are performed with each model: a 45 kip pulling force applied to the top outer closure plate; and a 45 kip pulling force applied to the bottom end plate. The top end pull force is applied as an annular line load to the top outer closure plate at the pintle plate bolt circle radius (R=16 inches). Similarly, the bottom end pull force is applied as an annular line load to the bottom end plate at the pintle plate bolt circle radius (R=16 inches for the “bounding” canister shell and R=28 inches for W21T-LL canister shell). In all cases, the canister shell is restrained longitudinally at a single shell node opposite the end of the pull force. The shell assembly stresses due to horizontal dead weight are evaluated separately (Section 3.5.3.1.2) from the horizontal transfer pull force.

The bounding canister shell stresses due to horizontal canister transfer loading from the canister top and bottom ends are reported in Table 3.5-3. The analysis results show that the highest stresses in the top end of the canister shell assembly due to a horizontal canister transfer pulling force of 45 kips occur in the end plate weld region at the canister end to which the loads are applied. The maximum canister shell stress intensities due to the normal horizontal canister transfer loading are less than the Service Level A allowable stress intensities.

3.5.4.3 On-Site Transport

The W21 canister is transported between the plant’s fuel building and the ISFSI inside the transfer cask which is mounted horizontally on the transfer skid and trailer, as described in the FuelSolutions™ Storage System FSAR. The loads associated with shock and vibration which occur during on-site transport operations are evaluated and shown to meet the structural design criteria. As described in Section 2.3.1.4 of this FSAR, peak accelerations of 1.6*g* vertical (including dead weight), ±0.2*g* lateral, and ±0.3*g* longitudinal are conservatively used for on-site transport of the canister within the transfer cask.

3.5.4.3.1 Canister Shell Assembly

The maximum stresses in the canister shell assembly due to the on-site transport shock and vibration loads are insignificant in comparison to the canister shell stresses resulting from the normal vertical and horizontal canister transfer loads. This is based on a comparison of the

canister shell stresses due to normal horizontal transfer and scaled stresses from the horizontal and vertical dead weight conditions. For the on-site transport shock and vibration load condition, the canister shell stresses are approximately equal to 0.63 times the horizontal dead weight (i.e., SRSS of 0.6*g* vertical and 0.2*g* lateral) plus 0.3*g* times the vertical dead weight. As shown in Table 3.5-3, the canister shell stresses due to the normal vertical and horizontal transfer load conditions are substantial greater than those due to dead weight loads, even without applying the reduction factors described above. Therefore, the canister shell stresses due to on-site transport shock and vibration loads are clearly lower than the corresponding Service Level A allowable stresses.

3.5.4.3.2 Spacer Plates

The W21 spacer plate stresses due to the on-site transport vibration loads are determined by scaling the maximum spacer plate stresses due to vertical and horizontal dead weight loads and adding the resulting stresses irrespective of sign and location. The vector sum of the +1.6*g* vertical and 0.2*g* lateral accelerations is 1.61*g* at an angle of 7° from vertical. In order to provide a bounding analysis for the on-site transport loads, a 2*g* vertical load is used to bound the vector sum of the in-plane vibration loads. Therefore, the W21 spacer plate stresses for the 2*g* vertical vibration load are equal to twice the maximum spacer plate stresses due to horizontal dead weight. The spacer plate stresses due to the 0.3*g* longitudinal vibration load are calculated by scaling the maximum spacer plate stresses due to vertical dead weight loading by 30%. The maximum stresses in the W21 spacer plates due to on-site transport handling loads are presented in Table 3.5-4. The results show that the W21 spacer plate stresses due to the on-site transport handling load are less than the Service Level A allowable stresses.

3.5.4.3.3 Support Rod Assemblies

Bounding shock and vibration loads of 1.6*g* vertical (including deadweight), 0.3*g* longitudinal, and 0.2*g* lateral are conservatively used as the on-site transport design loads. The support rod stresses due to the axial load of 0.3*g* are calculated by scaling the 20*g* end drop stresses by 0.3*g*/20*g*. Similarly, the support sleeve stresses due to the axial load of 0.3g are calculated by scaling the 50*g* end drop stresses by 0.3*g*/50*g*. The support rod and support sleeve stresses due to the resultant lateral load of 1.61*g* (vertical and lateral handling loads) are calculated by scaling the 60*g* side drop stresses by 1.61*g*/60*g*. The maximum support rod and support sleeve stresses due to these loads are conservatively combined irrespective of sign and location. Table 3.5-4 summarizes the maximum on-site transport stresses in the most highly loaded W21 support rod and support sleeve. The results show that the maximum on-site transport stresses in the most highly loaded W21 support rods and sleeves are less that the Service Level A allowable stresses for the weakest support rod and support sleeve materials.

3.5.4.3.4 Guide Tubes

The W21 guide tubes are designed for bounding shock and vibration loads of +1.6*g* vertical (including dead weight), 0.3*g* longitudinal, and 0.2*g* lateral. The W21 guide tube stresses due to the on-site transport vibration loads are determined by scaling the maximum guide tube stresses due to vertical and horizontal dead weight loads and adding the resulting stresses irrespective of sign and location. The vector sum of the +1.6*g* vertical and 0.2*g* lateral accelerations is 1.61*g* at an angle of 7° from vertical. In order to provide a bounding analysis for the on-site transport

loads, a 1.65*g* vertical load is used to bound the vector sum of the in-plane vibration loads. Therefore, the W21 guide tube stresses for the 1.65*g* vertical vibration load are equal to 1.65 times the maximum guide tube stresses due to horizontal dead weight. The guide tube stresses due to the 0.3*g* longitudinal vibration load are calculated by scaling the maximum guide tube stresses due to vertical dead weight loading by 30%. The maximum stresses in the W21 guide tubes due to on-site transport handling loads are presented in Table 3.5-4. The results show that the W21 guide tubes stresses due to the on-site transport handling load are less than the Service Level A allowable stresses.

3.5.5 Load Combinations and Comparison with Allowable Stresses

The bounding FuelSolutions™ W21 canister stresses resulting from the individual normal on-site transfer and storage load conditions are evaluated in the previous sections and summarized in Table 3.5-3 and Table 3.5-4 along with the corresponding Service Level A/B allowable stresses. The results show that the FuelSolutions™ W21 canister component stresses due to the normal on-site transfer and storage load conditions meet the Service Level A/B allowable stress criteria.

Load combinations for normal conditions are performed for the FuelSolutions™ W21 canister in accordance with Section 2.3. The normal load combinations are defined in Table 2.3-1. The structural evaluations of the W21 canister shell assembly and basket assembly for normal load combinations are presented in the following sections.

3.5.5.1 Canister Shell Assembly

The W21 canister normal load combinations defined in Table 2.3-1 are simplified by identifying the bounding load combinations. Load combination A1 (vertical dead weight plus canister drainage internal pressure) is evaluated in Section 3.5.2.1. Load combination A3 is bounded by load combination A5 and need not be evaluated. Therefore, the canister shell normal load combination evaluation presented in this section considers only load combinations A2, A4, and A5.

The canister shell assembly stressed due to load combinations A2, A4, and A5 are evaluated using the axisymmetric and three-dimensional finite element models described in Sections 3.9.3.1 and 3.9.3.2, respectively. Load combination evaluations are performed for both the “bounding” canister shell model, which bounds all W21 canister shell assemblies with the exception of the W21T-LL, and the W21T-LL canister shell assembly. Separate evaluations are performed for internal pressure acting on both the top inner and outer closures. Thermal loads are only included for the evaluation of secondary stress intensities.

For load combination A2, vertical dead weight, normal internal pressure, and normal thermal loads are applied simultaneously to the canister shell axisymmetric finite element models. For this condition, the canister shell is supported at the bottom end. The evaluation for load combination A4 is performed in a similar manner to load combination A2 with the addition of vertical canister transfer loads. For load combination A4, the canister shell is supported vertically at the location of the vertical transfer pintle plate bolt circle on top outer closure plate. The load combination A5 evaluation uses both the axisymmetric and three-dimensional finite element models. The axisymmetric model is used to determine the canister shell stresses due to normal horizontal canister transfer, normal internal pressure, and normal thermal loads. The

canister shell stresses due to horizontal dead weight, which are calculated using the three-dimensional half-symmetry finite element model described in Section 3.9.3.2, are conservatively added absolutely to the maximum stresses calculated with the axisymmetric model.

The governing canister shell stresses for normal load combinations A1, A2, A4, and A5 are summarized in Table 3.5-5. The W21 canister shell normal load combination evaluation results show that the W21 canister shell stresses for all normal load combinations are less than the corresponding Service Level A allowable stresses.

3.5.5.2 Canister Basket Assembly

Since the W21 basket assembly is not a pressure retaining component, and therefore need not be evaluated for internal pressure loads, the governing normal load combinations for the W21 basket assembly are A4 ($D_v + L_{hv} + T$) and A5 ($D_h + L_{hh1} + T$). The W21 basket assembly stresses due to these normal load combinations are conservatively calculated by adding the maximum stresses due to the individual load conditions absolutely and irrespective of location. In addition to the normal load conditions evaluated in the previous sections, the effects of the support rod torque which is applied during fabrication of the basket assembly is also included in the load combinations. As shown in Section 3.9.4, the maximum shear stress in the support rod segment threads due to the torque preload is 1.8 ksi. The governing load combination stress results for each of the W21 basket assembly structural components are summarized in Table 3.5-6. The results show that the maximum stresses due to governing normal load combinations are less than the corresponding Service Level A allowable stresses.

As discussed in Section 3.5.1.3.3, the support sleeve axial compressive stresses due to normal thermal conditions are combined with the maximum support sleeves stressed due to dead weight and normal handling and evaluated for buckling in accordance with NUREG/CR-6322. The maximum combined axial compressive stress and bending stress in the W21 support sleeves result from load combination A4. The maximum interaction ratio for the W21T support sleeves bounds that of the W21M support sleeves since the W21T support sleeve axial compressive stress due to normal thermal loads is significantly larger than that of the W21M support sleeve. The maximum axial compressive stress and bending stress in the W21T support sleeves due to load combination A4 are 15.24 ksi and 0.05 ksi, respectively.

The allowable axial compressive, bending, and Euler buckling stresses for the W21T SA-106, Grade C support sleeve material at 600°F for normal conditions are calculated in accordance with NUREG/CR-6322. The allowable stresses for carbon steel are function of the slenderness ratio and the parameter C_c which is calculated as follows:

$$C_c = \sqrt{\frac{2\pi^2 E}{S_y}} = \sqrt{\frac{2\pi^2 (26.5x10^3)}{29.6}} = 132.9$$

$$F_a = \frac{\left[1 - \frac{1}{2}\left(\frac{KL}{rC_c}\right)^2\right]S_y}{\frac{5}{3} + \frac{3}{8}\left(\frac{KL}{rC_c}\right) - \frac{1}{8}\left(\frac{KL}{rC_c}\right)^3} = 17.6 \text{ ksi} \qquad \text{for carbon steels when } \frac{KL}{r} < C_c$$

$$F_b = 0.6\ S_y = 17.8 \text{ ksi}$$

$$F_e' = \frac{\pi^2 E}{1.92(KL/r)^2} = 6{,}063 \text{ ksi} \qquad \text{for carbon steel}$$

The total axial stress is the maximum of thermal compression and compression due to handling. Therefore, f_a = 15.24 ksi > $0.15F_a$. Hence, equations 26 and 27 should be used.

Eq. 26: $$\frac{f_a}{F_a} + \frac{C_m \cdot f_b}{\left(1 - \frac{f_a}{F'_e}\right)F_b} = \frac{15.24}{17.6} + \frac{0.85 \cdot 0.05}{\left(1 - \frac{15.24}{6{,}063}\right)17.8} = 0.87 \quad < \quad 1.0$$

Eq. 27: $$\frac{f_a}{0.6F_y} + \frac{f_b}{F_b} = \frac{15.24}{0.6 \cdot 29.6} + \frac{0.05}{17.8} = 0.86 \quad < \quad 1.0$$

Therefore, the W21 support sleeves do not buckle due to controlling normal on-site storage and transfer load combinations.

3.5.6 Cold

The normal cold steady-state ambient temperature of 0°F with no fuel decay heat and no insolation results in a uniform temperature of 0°F throughout the canister. For this condition, the effects of differential thermal expansion between dissimilar materials within the canister assembly and the potential for brittle fracture and freezing of liquids are considered. The evaluation of the W21 canisters shows that no significant stresses result from differential thermal expansion.

Brittle fracture of the canister components for a lowest service temperature of 0°F is addressed in Section 3.1.2.3. Since the canister does not include any liquids, there is no potential damage due to freezing of liquids.

Table 3.5-1 - W21 Canister Temperatures for Normal Thermal Conditions

Canister Component	Maximum Temperatures (°F)		Design Temperature[1] (°F)
	In Storage Cask	In Transfer Cask	
Guide Tube	675	676	700
Carbon Steel Spacer Plate	662	668	700
Stainless Steel Spacer Plate	665	665	700
Bottom End Spacer Plate	350	450	500
Support Rod & Support Sleeve	472	599	600
Canister Shell (center/ends)[2]	409/288	559/268	300[3]

Notes:

(1) Temperature on which allowable stresses are based.

(2) The maximum canister shell temperatures in the central region of the canister cavity and at the end of the canister cavity are reported.

(3) The design temperature of 300°F is used for determining the canister shell allowable stresses since all of the controlling canister shell stresses occur in the top and bottom end regions.

Table 3.5-2 - Comparison of W21 Canister Shell Assembly Temperatures for Normal Thermal Conditions

Heat Load Profile	Gradient Location	Canister Shell Temperature Gradients (°F)			
		Storage		Transfer	
		Normal Cold	Normal Hot	Normal Cold	Normal Hot
Maximum Thermal	Axial	261	267	361	320
	Radial	35	32	49	41
	Overall	263	269	369	326
Maximum Gradient	Axial	301	306	**404**	357
	Radial	39	35	**49**	41
	Overall	301	306	**406**	358

Table 3.5-3 - Bounding W21 Canister Shell Assembly Normal Condition Stress Summary

Shell Component	Stress Type	Maximum Stresses[1] (ksi)							Allowable Stress[2] (ksi)
		Dead Weight		Handling		Internal Pressure		Normal	
		Vertical	Horizontal	Vertical	Horizontal[3]	Normal[4]	Drainage[5]	Thermal	
Top	P_m	0.0	0.4	0.4	0.6	0.2	[10]	N/A	20.0
Outer Closure	P_m+P_b[6]	0.2	0.7	2.8	11.1	3.2	[10]	N/A	30.0
Plate	P_m+P_b+Q	0.2	0.7	2.8	11.1	3.2	[10]	6.9	60.0
Top	P_m	0.1	0.8	1.8	2.6	1.1	[10]	N/A	16.0[7]
Outer Closure	Pure Shear[8]	0.0	0.0	0.8	0.4	0.3	[10]	N/A	9.6[7]
Weld	P_m+P_b+Q[6]	0.6	3.9	5.2	13.7	5.9	[10]	2.5	48.0[7]
Top	P_m	0.0	1.6	0.1	0.3	0.2	0.5	N/A	20.0
Inner Closure	P_m+P_b	0.3	3.6	0.8	0.7	1.3	9.4	N/A	30.0
Plate	P_m+P_b+Q	0.3	3.6	0.8	0.7	1.3	9.4	6.7	60.0
Top	P_m	0.2	8.9	0.8	1.7	1.3	0.8	N/A	18.0[9]
Inner Closure	Pure Shear[8]	0.1	4.5	0.4	0.9	0.6	0.4	N/A	10.8[9]
Weld	P_m+P_b+Q	0.2	8.9	0.8	0.9	1.3	0.8	0.5	54.0[9]
Cylindrical Shell	P_m	0.2	3.3	3.7	5.3	2.3	1.6	N/A	20.0
	P_m+P_b	0.5	7.7	14.7	12.0	7.2	2.1	N/A	30.0
	P_m+P_b+Q	0.5	7.7	14.7	12.0	7.2	2.1	2.8	60.0
Bottom Closure Plate	P_m	0.0	1.6	0.5	0.0	0.2	0.2	N/A	20.0
	P_m+P_b	0.2	3.6	8.7	0.2	4.3	1.0	N/A	30.0
	P_m+P_b+Q	0.2	3.6	8.7	0.2	4.3	1.0	6.9	60.0
Bottom Shell Extension	P_m	0.2	3.3	2.1	10.9	0.9	0.2	N/A	20.0
	P_m+P_b	0.6	7.7	2.8	12.1	1.2	0.5	N/A	30.0
	P_m+P_b+Q	0.6	7.7	2.8	12.1	1.2	0.5	1.8	60.0
Bottom End Plate (Except W21T-LL)	P_m	0.1	1.6	0.2	0.8	0.3	0.1	N/A	20.0
	P_m+P_b	0.1	3.6	6.9	15.5	3.4	0.1	N/A	30.0
	P_m+P_b+Q	0.1	3.6	6.9	15.5	3.4	0.1	6.5	60.0
W21T-LL Bottom End Plate	P_m	0.0	1.6	0.2	0.9	0.7	0.1	N/A	31.4
	P_m+P_b	0.2	3.6	8.3	30.1	5.0	0.2	N/A	47.1
	P_m+P_b+Q	0.2	3.6	8.3	30.1	5.0	0.2	6.7	94.2
Top Shield Plug Supt. Ring Weld	Pure Shear	0.1	0.0	0.1	0.0	0.0	0.2	0.5	9.0
Shell Extension Top Weld	Pure Shear	0.3	0.3	0.8	1.1	0.3	0.2	0.1	9.0
Shell Extension Bottom Weld	Pure Shear	0.3	0.3	0.4	0.9	0.2	0.2	0.1	9.0

Notes on following page:

Notes for Table 3.5-3:

(1) Bounding stresses from "bounding" canister shell and W21T-LL canister shell structural evaluations.

(2) The allowable stresses are based on the properties of the canister shell materials (Type 304 stainless steel) at 300°F, except for the W21T-LL bottom end plate allowable stresses which are based on SA-240 Type XM-19 stainless steel at 300ºF.

(3) Stresses due to horizontal ram load only, not including horizontal dead weight.

(4) Bounding stresses due to 10 psig normal internal design pressure, considered pressure acting on the top inner and outer closure plates, independently.

(5) Stresses due to 30 psig water drainage pressure plus vertical dead weight. For this condition, the canister shell top outer closure plate is not installed and the auxiliary shield plug and strongback are installed on top of the transfer cask and canister.

(6) The maximum bending stress in the top outer closure plate is determined using hand calculations assuming simply support edge conditions to demonstrate that the bending stress in the top outer closure weld may be classified as secondary.

(7) The allowable stresses for the top outer closure weld include a 0.8 weld efficiency factor in accordance with ISG-4.

(8) Pure shear stress in the welds is determined using hand calculations.

(9) The allowable stresses for the top inner closure weld include a 0.9 weld efficiency factor in accordance with Section 3.1.2.2 of this FSAR.

(10) The top outer closure plate and weld are not attached to the canister shell for this condition.

Table 3.5-4 - W21 Canister Basket Assembly Normal Condition Stress Summary

Basket Component	Stress Type	Maximum Stresses (ksi)					Allowable Stress (ksi)
		Dead Weight		Handling		Normal Thermal[2]	
		Vertical	Horizontal	Vertical[1]	On-Site Transport		
2.00" Thick Stainless Steel Spacer Plate	P_m	0.0	0.8	0.0	1.6	N/A	28.8
	P_m+P_b	0.1	1.9	0.1	3.9	N/A	43.2
	P_m+P_b+Q	0.2	2.8	0.3	5.6	70.3	86.4
0.75" Thick Carbon Steel Spacer Plate	P_m	0.0	1.8	0.0	3.6	N/A	35.9
	P_m+P_b	0.3	4.3	0.3	8.7	N/A	53.9
	P_m+P_b+Q	0.7	6.3	0.8	12.8	57.2	107.7
2.00" Thick Stainless Steel Bottom End Spacer Plate	P_m	0.0	[5]	0.0	1.6	N/A	29.7
	P_m+P_b	1.3	[5]	1.5	4.2	N/A	44.6
	P_m+P_b+Q	1.9	[5]	2.2	6.1	[4]	89.1
Support Rod Segments	P_m	0.4	0.1	0.5	0.2	N/A	29.2
	P_m+P_b	1.9	0.8	2.2	1.8	N/A	43.8
	P_m+P_b+Q	1.9	0.8	2.2	1.8	4.8	135.9[3]
Support Rod Threads	P_m	---	0.4	---	0.6	11.2	45.3[3]
Support Rod Sleeves	P_m	0.2	0.0	0.2	0.0	N/A	14.0
	P_m+P_b	0.2	0.0	0.2	0.1	N/A	21.0
	P_m+P_b+Q	0.2	0.0	0.2	0.1	15.2	59.1[3]
Guide Tube	P_m	0.1	1.1	0.1	1.8	N/A	16.3
	P_m+P_b	0.1	10.3	0.1	17.0	N/A	24.5
	P_m+P_b+Q	0.1	16.8	0.1	27.8	0.0	48.9

Notes:

(1) Handling stresses include vertical dead weight stresses.

(2) General thermal stress is classified as secondary stress intensity in accordance with NG-3213.12(a). General thermal stress intensity is taken as the linearized membrane plus bending stress intensity.

(3) The controlling secondary stresses due to normal conditions occur in the W21T support rods and sleeves. All other support rod and support sleeve allowable stresses are based on the weaker W21M materials.

(4) Bounded by hottest 2-inch thick stainless steel spacer plate.

(5) Bounded by stainless steel spacer plates in the mid-region of the basket assembly.

Table 3.5-5 - W21 Canister Shell Assembly Normal Load Combination Results Summary (2 Pages)

Canister Shell Component	Stress Type	Allowable Stress[1] (ksi)	L.C. A1 ($D_{v1}+P_b$) Maximum Stress[2] (ksi)	L.C. A1 ($D_{v1}+P_b$) Design Margin	L.C. A2 (D_v+P+T) Maximum Stress[2] (ksi)	L.C. A2 (D_v+P+T) Design Margin	L.C. A4 ($D_v+L_{hv}+P+T$) Maximum Stress[2] (ksi)	L.C. A4 ($D_v+L_{hv}+P+T$) Design Margin	L.C. A5 ($D_h+L_{hh1}+P+T$) Maximum Stress[2] (ksi)	L.C. A5 ($D_h+L_{hh1}+P+T$) Design Margin
Top	P_m	20.0	[3]	[3]	0.1	+Large	0.5	+41.8	1.0	+18.6
Outer Closure	P_m+P_b[4]	30.0	[3]	[3]	3.0	+8.87	6.0	+3.99	14.4	+1.09
Plate	P_m+P_b+Q	60.0	[3]	[3]	9.0	+5.65	11.5	+4.22	20.6	+1.91
Top	P_m	16.0[5]	[3]	[3]	1.0	+14.8	2.7	+4.84	4.5	+2.57
Outer Closure	Shear[6]	9.6[5]	[3]	[3]	0.25	+37.4	1.0	+8.50	0.6	+14.5
Weld	P_m+P_b+Q[4]	48.0[5]	[3]	[3]	5.8	+7.32	12.0	+3.00	24.6	+0.95
Top	P_m	20.0	0.5	+40.8	0.2	+Large	0.5	+38.7	2.3	+7.55
Inner Closure	P_m+P_b	30.0	9.4	+2.20	1.2	+23.6	2.5	+11.1	10.1	+1.98
Plate	P_m+P_b+Q	60.0	9.4	+5.38	7.9	+6.60	8.5	+6.07	15.4	+2.91
Top	P_m	18.0[7]	0.8	+21.4	1.2	+14.7	3.2	+4.56	13.6	+0.32
Inner Closure	Shear[6]	10.8[7]	0.4	+25.9	0.6	+17.8	1.6	+5.67	6.8	+0.58
Weld	P_m+P_b+Q	54.0[7]	0.8	+66.5	1.0	+53.7	4.3	+11.5	16.1	+2.35
Top Shield Plug	P_m	20.0	0.1	+Large	0.0	+Large	0.1	+Large	[9]	[9]
Bottom Support Plate[8]	P_m+P_b	30.0	0.9	+30.8	1.0	+30.1	1.2	+24.5	[9]	[9]
Cylindrical	P_m	20.0	1.6	+11.8	2.1	+8.52	5.5	+2.67	11.5	+0.73
Shell	P_m+P_b	30.0	2.1	+13.3	4.7	+5.35	22.0	+0.37	24.9	+0.20
	P_m+P_b+Q	60.0	2.1	+27.6	5.3	+10.3	22.3	+1.69	25.4	+1.36
Bottom	P_m	20.0	0.2	+98.5	0.1	+Large	3.0	+5.61	14.0	+0.43
Shell Extension[8]	P_m+P_b	30.0	0.5	+55.9	0.1	+Large	3.9	+6.80	19.7	+0.53
Bottom	P_m	20.0	0.2	+91.2	0.1	+Large	0.7	+27.5	2.0	+9.25
Closure	P_m+P_b	30.0	1.0	+29.3	0.5	+65.4	13.0	+1.31	10.0	+1.99
Plate	P_m+P_b+Q	60.0	1.0	+59.0	7.9	+6.57	19.6	+2.07	16.4	+2.66
Bottom End	P_m	20.0	0.1	+Large	0.1	+Large	0.3	+61.3	2.4	+7.40
Plate	P_m+P_b	30.0	0.1	+Large	0.1	+Large	9.7	+2.10	19.1	+0.57
(Excluding W21T-LL)	P_m+P_b+Q	60.0	0.1	+Large	6.5	+8.29	15.4	+2.90	25.4	+1.36

Notes: See next page.

Table 3.5-5 - W21 Canister Shell Assembly Normal Load Combination Results Summary (2 Pages)

Canister Shell Component	Stress Type	Allowable Stress(1) (ksi)	L.C. A1 ($D_{v1}+P_b$)		L.C. A2 (D_v+P+T)		L.C. A4 ($D_v+L_{hv}+P+T$)		L.C. A5 ($D_h+L_{hh1}+P+T$)	
			Maximum Stress(2) (ksi)	Design Margin	Maximum Stress(2) (ksi)	Design Margin	Maximum Stress(2) (ksi)	Design Margin	Maximum Stress(2) (ksi)	Design Margin
W21T-LL Bottom End Plate	P_m	31.4	0.1	+Large	0.1	+Large	0.3	+Large	2.5	+11.6
	P_m+P_b	47.1	0.2	+Large	0.1	+Large	12.2	+2.87	33.7	+0.40
	P_m+P_b+Q	94.2	0.2	+Large	6.6	+13.26	17.8	+4.29	40.1	+1.35
Top Shield Plug Supt. Ring Weld(8)	Shear	9.0	0.2	+52.3	0.1	+78.7	0.1	+70.4	0.0	+Large
Shell Extension Top Weld(8)	Shear	9.0	0.2	+42.5	0.1	+Large	1.1	+7.34	1.7	+4.42
Shell Extension Bottom Weld(8)	Shear	9.0	0.2	+36.2	0.0	+Large	0.6	+14.8	1.2	+6.40

Notes:

(1) The allowable stresses are based on the properties canister shell materials (Type 304 stainless steel) at 300°F, except for the W21T-LL bottom end plate allowable stresses which are based on SA-240 Type XM-19 stainless steel at 300ºF.

(2) Bounding stresses from "bounding" canister shell and W21T-LL canister shell structural evaluations.

(3) For this condition, the canister shell top outer closure plate is not installed and the auxiliary shield plug and strongback are installed on top of the transfer cask and canister.

(4) The maximum bending stress in the top outer closure plate is determined using hand calculations assuming simply support edge conditions to demonstrate that the bending stress in the top outer closure weld may be classified as secondary.

(5) The allowable stresses for the top outer closure weld include a 0.8 weld efficiency factor in accordance with ISG-4.

(6) Shear stress in the welds is determined using hand calculations.

(7) The allowable stresses for the top inner closure weld include a 0.9 weld efficiency factor in accordance with Section 3.1.2.2 of this FSAR.

(8) Evaluated in accordance with Subsection NF of the ASME Code. Accordingly, secondary stresses need not be considered.

(9) Stresses due to load combination A5 are not significant.

Table 3.5-6 - W21 Canister Basket Assembly Normal Load Combination Results

Basket Assembly Component	Stress Type	Allowable Stress (ksi)	L.C. A4 ($D_v+L_{hv}+P+T$) Maximum Stress (ksi)	L.C. A4 ($D_v+L_{hv}+P+T$) Minimum Design Margin	L.C. A5 ($D_h+L_{hh1}+P+T$) Maximum Stress (ksi)	L.C. A5 ($D_h+L_{hh1}+P+T$) Minimum Design Margin
2-inch Thick	P_m	28.8	0.0	+Large	1.6	+17.0
Stainless Steel	P_m+P_b	43.2	0.1	+Large	3.9	+10.2
Spacer Plate	P_m+P_b+Q	86.4	70.6	+0.22	75.9	+0.14
¾-inch Thick	P_m	35.9	0.0	+Large	3.6	+8.97
Carbon Steel	P_m+P_b	53.9	0.3	+Large	8.7	+5.19
Spacer Plate	P_m+P_b+Q	107.7	58.0	+0.86	70.0	+0.55
2-inch Thick	P_m	29.7	0.0	+Large	1.6	+17.6
Stainless Steel	P_m+P_b	44.6	1.5	+28.5	4.2	+9.62
Bottom End Spacer Plate	P_m+P_b+Q	89.1	72.5	+0.23	76.4	+0.17
W21M Support	P_m	29.2	0.5	+57.4	0.2	+Large
Rod	P_m+P_b	43.8	2.2	+18.9	1.8	+23.3
Segment	P_m+P_b+Q	87.6	2.9	+29.2	2.6	+32.7
W21M Support Rod Threads	P_m	29.2	3.5	+7.34	4.1	+6.12
W21M	P_m	14.0	0.2	+69.0	(1)	(1)
Support	P_m+P_b	21.0	0.2	+Large	(1)	(1)
Sleeve	P_m+P_b+Q	42.0	2.5	+15.8	(1)	(1)
	Buckling	1.0	0.33	+2.03	(1)	(1)
W21T Support	P_m	45.3	0.5	+89.6	0.2	+Large
Rod	P_m+P_b	68.0	2.2	+29.9	1.8	+36.8
Segment	P_m+P_b+Q	135.9	7.0	+18.4	6.6	+19.6
W21T Support Rod Threads	P_m	45.3	13.0	+2.48	13.6	+2.33
W21T	P_m	19.7	0.2	+97.5	(1)	(1)
Support	P_m+P_b	29.6	0.2	+Large	(1)	(1)
Sleeve	P_m+P_b+Q	59.1	15.5	+2.81	(1)	(1)
	Buckling	1.0	0.87	+0.15	(1)	(1)
Guide Tube	P_m	16.3	0.1	+Large	1.8	+8.06
	P_m+P_b	24.5	0.1	+Large	17.0	+0.44
	P_m+P_b+Q	48.9	0.1	+Large	27.8	+0.76

Notes:

(1) Bounded by load combination A4.

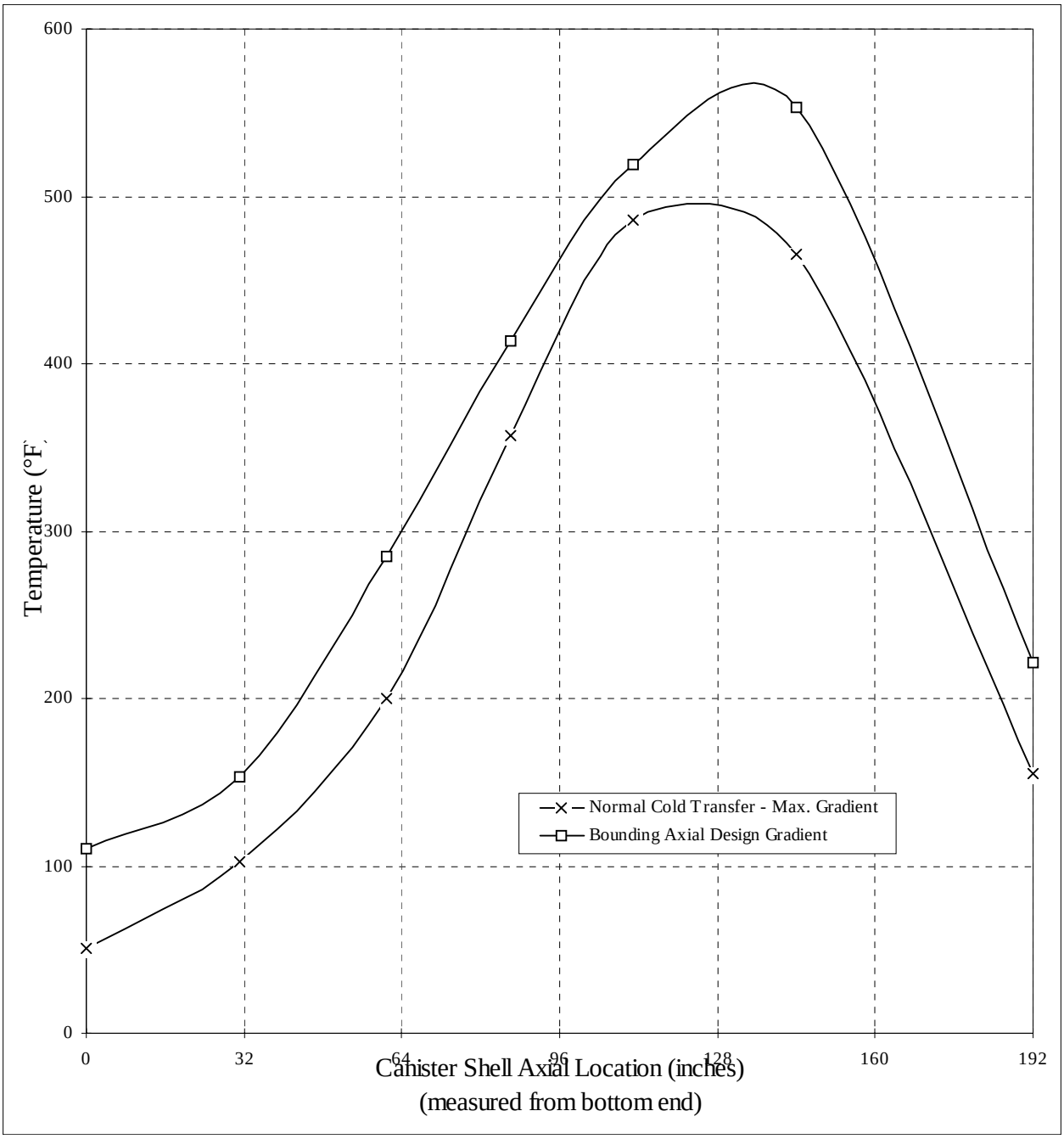

Figure 3.5-1 - W21 Canister Shell Axial Temperature Distribution for the Bounding Normal Thermal Condition

This page intentionally left blank.

3.6 Evaluation of Off-Normal Conditions

The FuelSolutions™ W21 canister is evaluated for all credible and significant design basis events resulting from off-normal operation. Off-normal conditions and events are defined in accordance with ANSI/ANS-57.9[24] and include events which, although not occurring regularly, can be expected to occur with moderate frequency on the order of no more than once a year. As defined in Section 2.3.2 of this FSAR, off-normal events considered in the structural evaluation of the FuelSolutions™ W21 canister include the following:

- Off-normal temperature and insolation loading
- Off-normal internal pressure
- Potential misalignment of casks during horizontal canister transfer
- Reflood of the canister to facilitate fuel retrieval
- Hydraulic ram failure during horizontal transfer

The results of the structural evaluations performed herein demonstrate that the FuelSolutions™ W21 canister classes and types described in Section 1.2.1.3 can withstand the effects of off-normal events without affecting structural safety function and remain in compliance with the applicable acceptance criteria. The following sections present the evaluation of the FuelSolutions™ W21 canister for the design basis off-normal conditions that demonstrate that the requirements of 10 CFR 72.122 are satisfied.

The load combinations evaluated for off-normal conditions are defined in Table 2.3-1. The load combinations include both normal loads which are evaluated in Section 3.5 of this FSAR and off-normal loads which are evaluated in this section. The off-normal load combination evaluations are provided in Section 3.6.6.

The structural evaluation of the W21 canister shell assembly is performed for the three bounding W21 canister shell designs as discussed in Section 3.1.1.1. The W21 basket assembly structural evaluations are performed for the bounding components as described in Section 3.1.1.2. The evaluation of the effects of off-normal conditions on the storage cask and transfer cask are provided in the FuelSolutions™ Storage System FSAR.

3.6.1 Off-Normal Temperature and Insolation Loadings

Many regions of the United States are subject to maximum summer temperatures in excess of 100ºF, and minimum winter temperatures that are significantly below 0°F. Therefore, to bound the expected temperatures of the storage cask during these short-term periods of extreme off-normal ambient conditions, conservative analyses are performed to calculate the steady-state W21 canister and fuel cladding temperatures for a maximum 125ºF ambient temperature with maximum insolation and for a minimum -40ºF ambient without insolation. The design basis heat loads for the W21 canister, as documented in Section 4.5 of this FSAR, are used for this analysis.

[24] ANSI/ANS-57.9, *Design Criteria for an Independent Spent Fuel Storage Installation (Dry Storage Type)*, American National Standards Institute, 1984.

3.6.1.1 Summary of Pressures and Temperatures

The canister shell assembly provides primary confinement for on-site transfer and storage conditions. As shown in Section 4.5.1.4 of this FSAR, the maximum internal pressure for the off-normal thermal conditions is 15.9 psig. The canister shell assembly is evaluated for a bounding off-normal internal pressure load of 16.0 psig. The canister basket assembly does not serve any pressure retaining function.

The temperatures in the FuelSolutions™ W21 canister for the off-normal storage and on-site transfer are calculated in Section 4.5 and summarized in Tables 4.4-4 and 4.4-7 through 4.4-10 of this FSAR. With the exception of the reflood condition, thermal stresses resulting from the most severe off-normal thermal conditions are evaluated in Section 3.6.1.3 using Service Level B allowable stress design criteria. The reflood thermal condition is defined as a Service Level C condition. In accordance with Subsections NB and NG of the ASME Code, general thermal stresses are classified as secondary and need not be evaluated for Service Level C conditions. The short-term elevated temperatures resulting from the storage cask horizontal unloading condition (Table 4.5-1, Case 13b) and canister vacuum drying (Table 4.5-4, Case 6) are not combined with other off-normal or accident load conditions. As discussed in Section 3.3.1, these short-term temperatures have no long-term effect on the mechanical properties of the canister materials.

The design temperatures used for the evaluation of the off-normal internal pressure load and cask misalignment are identical to the normal design temperatures shown in Table 3.5-1. These design temperatures bound the maximum component temperatures due to the off-normal hot storage thermal condition (Table 4.5-1, Case 9) on which the maximum off-normal internal pressure load is based, and the normal thermal conditions which are combined with the cask misalignment condition.

3.6.1.2 Differential Thermal Expansion

Differential thermal expansion of the W21 canister components are evaluated, as described in Section 3.5.1.2. The results of this evaluation demonstrate that the basket assembly components expand freely within the canister shell under all normal, off-normal, and accident conditions. As documented in Section 3.5.2 of the FuelSolutions™ Storage System FSAR, the canister shell assembly expands freely within the storage cask and transfer cask cavities under all conditions.

3.6.1.3 Thermal Stress Calculations

3.6.1.3.1 Canister Shell Assembly

The thermal stress evaluation of the canister shell assembly presented in Section 3.5.1.3.1 is performed using a design gradient that bounds the maximum thermal gradients in the canister shell assembly for all normal and off-normal thermal conditions. The canister shell assembly thermal stresses resulting from the bounding thermal load are summarized in Table 3.5-3. The results show that the bounding general thermal stress intensities in the canister shell assembly are less than the corresponding Service Level A allowable stress intensities.

3.6.1.3.2 Canister Basket Assembly

Spacer Plates

As discussed in Section 3.5.1.3.2, thermal stresses in the W21 spacer plates are approximately linearly proportional to the difference between $\alpha E(T-70)$ at the maximum and minimum spacer plate temperatures for any thermal condition. The spacer plate stress evaluation for normal thermal conditions also shows that the normal cold thermal condition with the maximum canister heat load produces the highest thermal gradients and highest thermal stresses in both the W21 carbon steel and stainless steel spacer plates. The off-normal thermal evaluation of the W21 canister shows that the off-normal cold thermal conditions result in larger spacer plate gradients than the off-normal hot thermal conditions. Thus, the off-normal cold ambient condition with maximum canister heat load in the storage cask will produce the highest spacer plate thermal stresses.

The relative thermal stresses are calculated for the hottest W21 carbon steel and stainless steel spacer plate using the off-normal thermal temperatures for the W21 canister with the maximum heat load (i.e., 25.1 kW) in the storage cask. The results of this evaluation show that the maximum relative thermal stress values ($\Delta\alpha E(T-70)$) for the hottest W21 carbon steel and stainless steel spacer plates due to the off-normal cold storage condition are 2.8% and 3.5% higher, respectively, than the corresponding relative thermal stresses for the normal cold storage condition. As shown in Table 3.1-5, the Service Level B allowable stress limits used for the evaluation of off-normal thermal stresses are 10% greater than the Service Level A limits used for the evaluation of normal thermal stresses. Therefore, the minimum design margins in the W21 spacer plates for the off-normal thermal load condition are greater than those calculated for normal thermal conditions.

Support Rods and Support Sleeves

Thermal stresses in the W21 support rods and support sleeves due to differential thermal expansion resulting from a bounding normal thermal design temperature of 600°F are calculated in Section 3.5.1.3.3. As shown in Tables 4.5-1 and 4.5-4 of this FSAR, the maximum temperature of the W21 support rod assemblies for off-normal thermal conditions is 609°F. Since the coefficient of thermal expansion of the W21 support rod and support sleeve materials does not vary significantly from 600°F to 609°F, the thermal stresses in the W21 support rod and sleeves at the bounding off-normal temperature of 609°F will be higher than the maximum thermal stresses for normal conditions (i.e., at 600°F) by the factor 1.02 [=(609–70)/(600-70)].

As shown in Table 3.1-5, the Service Level B allowable stress limits used for the evaluation of off-normal thermal stresses are 10% greater than the Service Level A limits used for the evaluation of normal thermal stresses. Therefore, the minimum design margins in the W21 support rods and support sleeves for the off-normal thermal load condition are greater than those calculated for normal thermal conditions.

Guide Tubes

As shown in Tables 4.5-1 and 4.5-4 of this FSAR, the maximum temperature of the W21 guide tubes for off-normal thermal conditions is 696°F. As shown in Section 3.5.1.2.2, the W21 guide tubes expand freely within the W21 canister at the bounding design temperature of 700°F.

Therefore, there are no significant thermal stresses in the W21 guide tubes for off-normal thermal conditions.

3.6.2 Off-Normal Internal Pressure

As discussed in Section 4.1.6 and summarized in Table 4.1-5, the design basis off-normal condition internal pressure for the FuelSolutions™ W21 canister is based on the required backfill quantity of helium in accordance with the *technical specification* contained in Section 12.3 of this FSAR, elevated to the extreme off-normal condition canister cavity gas temperature. In addition, a concurrent non-mechanistic failure of 10% of the fuel rods with complete release of their fill gas and 30% of their fission gasses into the canister cavity elevated to the extreme off-normal condition canister cavity gas temperature is assumed. As shown in Table 4.1-5, the W21 canister maximum internal pressure for off-normal storage and transfer conditions is 15.9 psig. A bounding internal pressure of 16.0 psig is conservatively used in the W21 canister shell off-normal internal pressure analysis.

The W21 canister shell assembly stresses due to the bounding off-normal internal pressure of 16 psig are calculated using the canister shell axisymmetric finite element models described in Section 3.9.3.1 in the same manner as the normal internal pressure stress evaluation presented in Section 3.5.2.2 of this FSAR. The resulting stresses for this loading condition are provided in Table 3.6-1. The results show that the maximum W21 canister shell stresses due to off-normal internal pressure loading are less than the Service Level C allowable stresses.

3.6.3 Cask Misalignment

The FuelSolutions™ storage system is evaluated for a maximum hydraulic ram load resulting from cask misalignment or interference during horizontal canister transfer. The misalignment ram load is limited to a maximum pushing force of 70 kips or a maximum pulling force of 50 kips on either the top or bottom end of the canister shell assembly. The structural consequences of the hydraulic ram pushing force of 70 kips and pulling force of 50 kips are evaluated for both the top and bottom ends of the canister shell assembly. The canister shell stresses due to the cask misalignment condition are evaluated using Service Level B limits. The canister basket assembly is contained inside the canister shell cavity and protected from the externally applied ram loads. Therefore, the canister basket assembly is not affected by the cask misalignment load condition.

The stresses in the canister shell assembly due to the cask misalignment 50-kip pull force are equal to 110% (i.e., 50/45) of those calculated in Section 3.5.4.2 for the normal horizontal transfer 45-kip pull force. As shown in Table 3.1-5, the Service Level B allowable stresses are also equal to 110% of the Service Level A allowable stresses. Therefore, the minimum design margins in the canister shell assembly for the cask misalignment 50-kip pull force are equal to those calculated for the normal horizontal transfer 45-kip pull force.

The structural evaluations of the W21 canister shell assembly for the 70-kip pushing force on the top and bottom ends of the canister shell are performed using the same analytical methodology and finite element models used for the normal horizontal canister transfer structural evaluation, as described in Section 3.5.4.2. The 70-kip pushing force is applied to the ends of the canister shell assembly in the same manner as the normal horizontal transfer load. The canister shell maximum primary stress intensities resulting from the 70-kip pushing force applied to either the

top or bottom end of the canister are summarized in Table 3.6-1. The results show that the canister shell maximum stress intensities due to the cask misalignment load are less than the Service Level B allowable stress intensities.

3.6.4 Canister Opening/Reflood

The FuelSolutions™ W21 canister is evaluated for the effects of reflooding the canister after the canister cavity is drained and dried. This could occur prior to or after dry storage. The operating procedures provided in Section 8.2.3 of the FuelSolutions™ Storage System FSAR states that the maximum internal pressure for this condition is 100 psig. The structural evaluation provided in this section demonstrates that the FuelSolutions™ W21 canister can accommodate a maximum reflood internal pressure of 100 psig without compromising the integrity of the canister.

The canister shell assembly is designed in accordance with Subsection NB of the ASME Code. The reflood internal pressure load is a condition which can occur in the design life of a canister when it is necessary to retrieve the fuel from the canister shell. In accordance with NCA-2142.4(b), Service Level C allowables “permit large deformations in areas of structural discontinuity which may necessitate the removal of the component from service for inspection or repair of damage to the component or support.” Accordingly, the design allowables for Service Level C conditions are applied for the reflood condition. The Service Level C allowables include inherent factors of safety which assure the safety of the plant personnel performing the reflood operation.

The structural evaluation of the canister shell assembly for the reflood pressure load is performed using a combination of hand calculations and finite element analysis. The evaluation addresses the potential structural failure of the entire canister shell assembly, including the top closure plate welds, bottom closure plate welds, and vent/drain port closure welds.

The stresses in the canister shell due to reflood internal pressure plus vertical dead weight loading are evaluated on an elastic basis using an axisymmetric finite element model similar to the one described in Section 3.9.3.1 and shown in Figure 3.9-4. The top outer closure plate remains attached to the canister shell for the reflood condition and small holes are cut into the top outer closure plate to gain access to the vent and drain ports. These holes have no significant effect on the structural capacity of the top outer closure plate and are neglected in the model. The results obtained from this model are applicable to both the FuelSolutions™ W21M and W21T canister shell assemblies since the controlling deformations and stresses due to reflood pressure occur in the canister shell top closure region, which is the same for both W21 canister designs. Since the top shield plug does not provide any support for the top closure plates for the reflood pressure condition, it is only included in the model for the effect of its dead weight.

The dead weight of the canister basket assemblies and SNF are modeled as a uniform pressure load over the inner surface of the canister shell bottom closure plate. A bounding weight of 60 kips is conservatively used for the basket assemblies and fuel. A bounding reflood internal pressure load of 125 psi is applied to the inner surfaces of the canister shell bottom closure plate, cylindrical shell, and top inner closure plate. The maximum canister shell stresses resulting from the 125 psi reflood internal pressure load are summarized in Table 3.6-1. The results show that the maximum stresses in the canister shell assembly due to a bounding reflood internal pressure of 125 psi are less than the allowable stress intensities.

In addition to the main structural components of the canister shell assembly evaluated above, the W21 canister shell vent/drain port closure welds are evaluated for reflood internal pressure to demonstrate its structural adequacy. The evaluation is performed in two parts: a plastic analysis of the canister shell assembly is performed using an axisymmetric shell model to determine the amount of deflection in the inner closure plate at the vent and drain port locations (i.e., R=29.63-inch); and the local deflection of the inner closure plate at the vent and drain port locations which corresponds to the load capacity of the vent and drain port welds is calculated using hand calculations and compared to the deflection from the plastic analysis to determine the reflood internal pressure load at which the vent/drain port weld reaches the Service Level C primary stress allowable. The results of this analysis show that the deflection of the inner closure plate at the vent and drain port weld locations due to a 100 psi internal pressure is 0.0338 inches. The local deflection of the inner closure plate corresponding to the Service Level C load capacity of the vent and drain port closure welds is 0.0345 inches. Therefore, the stress in the W21 canister shell vent and drain port closure welds due to a 100 psi reflood internal pressure are less than the Service Level C allowable stress.

3.6.5 Hydraulic Ram Failure During Horizontal Transfer

The postulated mechanical failure of the hydraulic ram system during horizontal canister transfer, as discussed in Section 2.3.2.5 of this FSAR, does not result in any loading on the canister. Therefore, no structural evaluation is required for this condition.

3.6.6 Off-Normal Load Combinations

Load combinations are performed for the FuelSolutions™ W21 canister in accordance with Section 2.3 for off-normal conditions. The load combinations include normal loads, which are evaluated in Section 3.5, and off-normal loads, which are evaluated in this section. Load combinations are summarized in Table 2.3-1. The structural evaluations of the W21 canister shell assembly and basket assembly for off-normal load combinations are presented in the following sections.

3.6.6.1 Canister Shell Assembly

The W21 canister off-normal load combinations defined in Table 2.3-1 are evaluated using a combination of finite element analysis and hand calculations. Load combinations B1 ($D_v + P_o + T_o$) and B2 ($D_v + L_{hv} + P_o + T_o$) are evaluated using the canister shell assembly axisymmetric finite element models described in Section 3.9.3.1. For these load combinations, the individual loads are applied to the model simultaneously. For load combinations B3 ($D_h + (L_{hh1}$ or $L_{hh2}) + P_o + T_o$) and B4 ($D_v + L_m + P + T$), the canister shell stresses for all combined loads, excluding horizontal dead weight, are determined using the axisymmetric finite element models described in Section 3.9.3.1.

These load combination evaluations are performed for canister horizontal transfer handling loads applied to both the top and bottom ends of the canister shell assembly. The maximum stresses due to horizontal dead weight are then conservatively combined with the maximum stresses from the finite element solution for each canister shell assembly component, irrespective of sign and location.

For load combinations B1 through B4, internal pressure loads are considered separately for both the inner closure plate and outer closure plate. Load combination C5 ($D_v + P_r + T_r$) is addressed in Section 3.6.4. The W21 canister shell load combination results for off-normal load combinations are reported in Table 3.6-2. The results show that all stresses are within the corresponding allowable stress limits.

3.6.6.2 Canister Basket Assembly

The off-normal load combinations for the W21 canister are shown in Table 2.3-1. They include dead weight, normal handling, cask misalignment, off-normal and reflood internal pressure, and off-normal and reflood thermal loads. As discussed in Section 3.6.3, the basket assembly components are not affected by the cask misalignment loading. Since the basket assembly is not a pressure retaining component, it is not evaluated for internal pressure loading. Therefore, the basket assembly off-normal load combinations reduce to dead weight plus normal handling plus off-normal thermal.

The only difference between the basket assembly off-normal load combinations and the corresponding normal load combinations is the difference between normal and off-normal thermal stresses. As discussed in Section 3.6.1.3.2, the basket assembly design margins for off-normal thermal stress are bounded by those due to normal thermal stress. Therefore, the basket assembly design margins for the off-normal load combinations are also bounded by those due to the corresponding normal load condition.

Table 3.6-1 - W21 Canister Shell Assembly Off-Normal Condition Stress Summary

Shell Component	Stress Type	Maximum Stresses (ksi)			Allowable Stress[3] (ksi)
		Off-Normal Internal Pressure	Reflood Internal Pressure[1]	Misalignment Horizontal Transfer[2]	
Top Outer Closure Plate	P_m	0.3	2.5	0.8	22.0 / 24.0
	P_m+P_b	5.2	35.8	17.3	33.0 / 36.0
Top Outer Closure Weld	P_m	1.7	N/A	2.3	17.6 / 19.2
	Shear	0.4	--	0.6	9.6 / 9.6
	P_m+P_b	N/A	26.3	N/A	26.4 / 28.8
	P_m+P_b+Q	9.4	N/A	16.6	52.8 / N/A
Top Inner Closure Plate	P_m	0.3	1.7	0.8	22.0 / 24.0
	P_m+P_b	2.1	17.9	5.5	33.0 / 36.0
Top Inner Closure Weld	P_m	2.0	N/A	3.9	19.8 / 21.6
	Shear	1.0	--	1.9	10.8/ 10.8
	P_m+P_b	N/A	31.2	N/A	29.7 / 32.4
Top Shield Plug Bottom Support Plate	P_m	0.0	[4]	0.3	22.0 / 24.0
	P_m+P_b	0.1	[4]	8.8	33.0 / 36.0
Cylindrical Shell	P_m	3.7	N/A	6.6	22.0 / 24.0
	P_m+P_b	11.6	20.1	25.8	33.0 / 36.0
Bottom End Shell Extension	P_m	1.5	[4]	3.2	22.0 / 24.0
	P_m+P_b	1.8	[4]	5.0	33.0 / 36.0
Bottom Closure Plate	P_m	0.4	0.8	0.9	22.0 / 24.0
	P_m+P_b	6.9	4.0	14.3	33.0 / 36.0
Bottom End Plate (Excl. W21T-LL)	P_m	0.5	16.2	1.2	22.0 / 24.0
	P_m+P_b	5.4	27.9	16.6	33.0 / 36.0
W21T-LL Bottom End Plate	P_m	1.1	16.2	0.8	34.5 / 43.4
	P_m+P_b	8.0	27.9	13.8	51.8 / 65.1
Top Shield Plug Support Ring Weld	Shear	0.0	[4]	0.3	12.0 / 13.5
Shell Extension Top Weld	Shear	0.5	[4]	0.8	12.0 / 13.5
Shell Extension Bottom Weld	Shear	0.2	[4]	1.6	12.0 / 13.5

Notes:

(1) Stresses are for bounding reflood internal pressure of 125 psig.

(2) Stresses due to 70 kip pushing load.

(3) Allowable stress intensities are based on the canister shell assembly materials (SA-240, Type 304 stainless steel) properties at 300°F, except for the W21T-LL bottom end plate which is based on SA-240, Type XM-19 stainless steel properties at 300°F. Service Level B and Service Level C allowable stresses are reported (B/C). Service Level B allowable stresses are used for off-normal internal pressure and misalignment horizontal transfer conditions. Service Level C allowable stresses apply only to the reflood condition.

(4) Stresses are insignificant for the reflood internal pressure load condition.

Table 3.6-2 - W21 Canister Shell Assembly Off-Normal Load Combination Results (2 Pages)

Canister Shell Component	Stress Type	Allowable Stress[2] (ksi)	L.C. B1 ($D_v+P_o+T_o$) Maximum Stress (ksi)	L.C. B1 Design Margin	L.C. B2 ($D_v+L_{hv}+P_o+T_o$) Maximum Stress (ksi)	L.C. B2 Design Margin	L.C. B3 ($D_h+L_{hh}+P_o+T_o$) Maximum Stress (ksi)	L.C. B3 Design Margin	L.C. B4[1] (D_h+L_m+P+T) Maximum Stress (ksi)	L.C. B4 Design Margin
Top Outer Closure Plate	P_m	22.0	0.2	+90.7	0.5	+40.5	1.1	+19.0	1.2	+17.0
	P_m+P_b[3]	33.0	5.0	+5.63	8.0	+3.15	16.3	+1.03	17.3	+0.91
	P_m+P_b+Q	66.0	10.8	+5.12	13.3	+3.98	22.4	+1.95	14.8	+3.47
Top Outer Closure Weld	P_m	17.6[4]	1.7	+9.60	3.4	+4.24	5.1	+2.43	2.5	+6.10
	Shear[5]	9.6[4]	0.4	+22.4	1.2	+7.21	0.8	+11.3	0.6	+16.5
	P_m+P_b+Q	52.8[4]	8.9	+4.93	15.4	+2.42	28.0	+0.89	16.2	+2.27
Top Inner Closure Plate	P_m	22.0	0.3	+77.6	0.6	+34.5	2.5	+7.91	2.3	+8.61
	P_m+P_b	33.0	2.0	+15.3	3.3	+9.00	10.8	+2.06	8.2	+3.02
	P_m+P_b+Q	66.0	8.5	+6.73	9.1	+6.22	16.3	+3.05	14.7	+3.49
Top Inner Closure Weld	P_m	19.8[6]	1.9	+9.42	4.0	+3.94	14.4	+0.38	12.0	+0.66
	Shear[5]	10.8[6]	1.0	+10.4	2.0	+4.37	7.2	+0.50	6.0	+0.81
	P_m+P_b+Q	59.4[6]	1.9	+31.1	5.8	9.19	17.7	+2.36	15.9	+2.74
Top Shield Plug Bottom Support Plate	P_m	22.0	0.0	+Large	0.1	+Large	0.9	+23.2	0.2	+Large
	P_m+P_b	33.0	1.0	+33.4	1.2	+26.5	2.3	+13.1	7.4	+3.48
Cylindrical Shell	P_m	22.0	3.5	+5.32	6.5	+2.40	12.9	+0.70	8.2	+1.67
	P_m+P_b	33.0	7.8	+3.23	26.3	+0.25	28.0	+0.18	25.8	+0.28
	P_m+P_b+Q	66.0	8.4	+6.86	26.8	+1.46	28.6	+1.31	25.5	+1.59
Bottom Shell Extension	P_m	22.0	0.2	+Large	3.6	+5.13	14.0	+0.58	5.8	+2.82
	P_m+P_b	33.0	0.4	+83.6	4.5	+6.35	19.6	+0.68	11.3	+1.92
Bottom Closure Plate	P_m	22.0	0.2	+90.7	0.9	+24.9	2.1	+9.28	2.3	+8.78
	P_m+P_b	33.0	1.1	+28.5	15.6	+1.12	14.1	+1.35	13.8	+1.40
	P_m+P_b+Q	66.0	8.0	+7.21	22.0	+2.00	20.3	+2.25	19.4	+2.40
Bottom End Plate (Excluding W21T-LL)	P_m	22.0	0.1	+Large	0.4	+56.9	2.4	+8.24	2.8	+6.86
	P_m+P_b	33.0	0.4	+74.0	11.4	+1.90	19.1	+0.73	17.5	+0.89
	P_m+P_b+Q	66.0	6.4	+9.25	17.0	+2.87	25.4	+1.60	24.4	+1.70

Table 3.6-2 - W21 Canister Shell Assembly Off-Normal Load Combination Results (2 Pages)

Canister Shell Component	Stress Type	Allowable Stress[2] (ksi)	L.C. B1 ($D_v+P_o+T_o$)		L.C. B2 ($D_v+L_{hv}+P_o+T_o$)		L.C. B3 ($D_h+L_{hh}+P_o+T_o$)		L.C. B4[1] (D_h+L_m+P+T)	
			Maximum Stress (ksi)	Design Margin	Maximum Stress (ksi)	Design Margin	Maximum Stress (ksi)	Design Margin	Maximum Stress (ksi)	Design Margin
W21T-LL Bottom End Plate	P_m	34.5	0.1	+Large	0.3	+Large	2.5	+12.8	2.3	+14.0
	P_m+P_b	51.8	0.8	+64.6	14.5	+2.58	33.7	+0.54	15.0	+2.46
	P_m+P_b+Q	103.6	6.6	+14.7	20.1	+4.15	40.1	+1.58	20.1	+4.14
Top Shield Plug Supt. Ring Weld	Shear	12.0	0.1	+99.0	0.1	+91.3	0.0	+Large	0.3	+41.9
Shell Extension Top Weld	Shear	12.0	0.2	+65.7	1.3	+8.45	1.8	+5.56	0.9	+13.1
Shell Extension Bottom Weld	Shear	12.0	0.2	+79.0	0.7	+17.2	1.2	+8.76	1.5	+6.95

Notes to Table 3.6-2:

(1) Load combination B4 stresses are determined using a cask misalignment 70 kip pushing force. The minimum design margins in the canister shell assembly for the 50 kip pulling force are equal to those reported for load combination A5 in Table 3.5-5.

(2) The allowable stresses are conservatively based on the properties of the weaker of the W21M and W21T canister shell materials (SA-240, Type 304 stainless steel) at 300°F, except for the W21T-LL bottom end plate allowable stresses, which are based on SA-240, Type XM-19 stainless steel at 300°F.

(3) The maximum bending stress in the top outer closure plate is determined using hand calculations assuming simply support edge conditions to demonstrate that the bending stress in the top outer closure weld may be classified as secondary.

(4) The allowable stresses for the top outer closure weld include a 0.8 weld efficiency factor in accordance with ISG-4.

(5) Shear stress in the welds is determined using hand calculations.

(6) The allowable stresses for the top inner closure weld include a 0.9 weld efficiency factor in accordance with Section 3.1.2.2 of this FSAR.

3.7 Evaluation of Accident Conditions

The FuelSolutions™ W21 canister is evaluated for a range of postulated accidents and natural phenomena, as defined in Sections 2.3.3 and 2.3.4 of this FSAR.

The design basis postulated accident conditions and natural phenomena considered are in accordance with ANSI/ANS-57.9,[25] and include events that are postulated because their consequences may result in maximum potential impact on the immediate environs. In accordance with 10CFR72, evaluations are performed for a range of postulated accidents, including those with the potential to result in an annual dose greater than 25 mrem outside the controlled area. The design basis postulated accident and natural phenomena events evaluated for the W21 canister include the following:

- Fully blocked storage cask inlet and outlet vents
- Loss of transfer cask neutron shield
- Cask drop and tip-over
- Fire
- Flood
- Earthquake
- Accident Internal Pressure

As discussed in Sections 2.3.3 and 2.3.4, the canister is not subjected to loads due to explosive overpressure; tornado; wind; burial under debris; lightning; and snow and ice.

The results of the structural evaluations performed herein demonstrate that the FuelSolutions™ W21 canisters described in Section 1.2.1.3 can withstand the effects of all credible accident conditions and natural phenomena without affecting structural safety function and remain in compliance with the applicable acceptance criteria. The load combinations evaluated for postulated accident conditions are defined in Table 2.3-1. The load combinations include normal loads, which are evaluated in Section 3.5; off-normal loads, which are evaluated in Section 3.6; and accident loads, which are evaluated in this section. The accident load combination evaluations are provided in Section 3.7.10.

The structural evaluations of W21 canister shells is performed for the bounding W21 canister shell designs, determined to be the W21M-LD, W21T-LS, and W21T-LL canister shell assemblies, as discussed in Section 3.1.1.1.

The W21 basket assembly structural evaluations are performed for the bounding W21 basket assembly components as described in Section 3.1.1.2.

The evaluation for the effects of the design basis postulated accident events on the FuelSolutions™ W150 Storage Cask and W100 Transfer Cask is provided in the FuelSolutions™ Storage System FSAR.

---

[25] ANSI/ANS-57.9, *Design Criteria for an Independent Spent Fuel Storage Installation (Dry Storage Type)*, American National Standards Institute, 1984.

3.7.1 Fully Blocked Storage Cask Inlet and Outlet Vents

The FuelSolutions™ W21 canister, loaded with design basis fuel assemblies and dry stored vertically in the storage cask, is evaluated for a postulated accident thermal event in which complete blockage of all storage cask inlet and outlet vents occurs. A steady-state ambient temperature of 100°F with insolation, as defined in the FuelSolutions™ Storage System FSAR, are conservatively postulated to occur concurrently.

As shown in Chapter 4 of this FSAR, the maximum temperatures in the W21 canister assembly due to the storage cask blocked vent accident thermal condition are bounded by those resulting from the transfer cask loss of neutron shield accident thermal condition. The peak canister internal pressure for accident thermal conditions is discussed in Section 4.6 of this FSAR, and is 68.7 psig. A bounding design basis accident pressure of 69.0 psig is used for structural evaluation of all W21 canister shell configurations, with the exception of the W21T-LL. The maximum accident pressure for the W21T-LL canister is 45.0 psig. The W21T-LL canister shell stresses are calculated based on a bounding 45.1 psig accident internal pressure. Therefore, the canister shell accident pressure analysis discussed in Section 3.7.9 bounds the pressure due to the blocked vent condition.

In general, thermal stresses within the canister result from internal thermal gradients. These gradients are generally highest for the thermal conditions with the highest internal heat generation rate and the lowest ambient temperature. As shown in Figure 4.6-2, the thermal gradient between the maximum spacer plate temperature and the maximum canister shell temperature is reduced during the blocked vent storage accident. In the same manner, the thermal gradients within the canister shell and basket assemblies are also reduced during the postulated blocked vent accident. For this reason, and since the maximum canister temperatures for the storage cask blocked condition are bounded by those for the transfer cask loss of neutron shield accident, the canister thermal stresses for the storage cask blocked vent condition are bounded by other conditions.

3.7.2 Loss of Transfer Cask Neutron Shield

The FuelSolutions™ W21 canister, loaded with design basis fuel assemblies while in the transfer cask, is evaluated for a postulated accident thermal event in which the transfer cask liquid neutron shield is drained. A steady-state ambient temperature of 100°F with insolation, as defined in the FuelSolutions™ Storage System FSAR, are conservatively postulated to occur concurrently.

As discussed in Section 4.6 of this FSAR, the W21 canister internal pressure resulting from the loss of neutron shield accident is less than the design basis accident pressure of 69.0 psig. Therefore, the canister shell accident pressure analysis discussed in Section 3.7.9 bounds the pressure due to the loss of neutron shield condition.

In general, thermal stresses within the canister result from internal thermal gradients. These gradients are generally highest for the thermal conditions with the highest internal heat generation rate and the lowest ambient temperature. As shown in Section 4.6 of this FSAR, the thermal gradient between the maximum spacer plate temperature and the maximum canister shell temperature is significantly reduced during the loss of neutron shield accident. In the same manner, the thermal gradients within the canister shell and basket assemblies are also reduced

during the postulated loss of neutron shield accident. Therefore, the canister thermal stresses for the loss of neutron shield accident are bounded by other conditions, with the exception of the basket assembly support rods.

As discussed in Section 3.5.1.3.3, thermal stresses in the W21 support rods and support sleeves result from differential thermal expansion of dissimilar materials at elevated temperatures. These stresses are highest for the maximum support rod temperatures. As shown in Chapter 4 of this FSAR, the loss of neutron shield accident thermal condition results in the highest overall support rod temperature for all normal, off-normal, and accident conditions of 733°F. Therefore, the bounding support rod accident thermal stresses are evaluated for this condition. Since general thermal stress is classified as secondary in accordance with Subsection NG of the ASME Code, the support rod stresses due to loss of neutron shield accident need not be evaluated using the ASME Service Level D allowable stress design criteria. However, a buckling evaluation of the W21 support sleeves, which are loaded in axial compression as a result of the differential thermal expansion, is performed in accordance with NUREG/CR-6322 to assure that the support sleeves remain stable under these conditions.

The W21 support sleeve stresses are calculated for a bounding temperature of 750°F using the same methodology that is used for the support rod assembly normal thermal stress evaluation. The support sleeve thermal stresses are determined using hand calculations, treating the support rod segments as axial members which act in parallel with the support sleeves and spacer plates. As shown in Section 3.5.1.3.3, the thermal stresses in the W21T support rod assemblies are much higher than those in the W21M support rod assemblies due to the different support rod materials used. Furthermore, the normal thermal stress evaluation shows that the maximum thermal stresses for any W21T basket occur in the W21T-SS support rod assemblies. Therefore, thermal stresses for the loss of neutron shield accident are only calculated for the W21T-SS support sleeves. The maximum axial load in the W21T-SS support rod assembly at the bounding temperature of 750°F is calculated based on the principal of static equilibrium to be 50.1 kips. The resulting axial compressive stress in the support sleeves is 22.5 ksi.

The W21T support sleeve allowable axial compressive stress for accident conditions is calculated in accordance with NUREG/CR-6322 using Equation 33 for carbon steel material. The allowable axial compressive stress for the longest W21T-SS support sleeve, based on SA-106, Grade C carbon steel material properties at 750°F, is 24.5 ksi. Therefore, the maximum axial compressive stress in the W21T-SS support sleeves is lower than the corresponding allowable axial compressive stress for accident conditions and the support sleeves will not buckle under the most severe on-site storage and transfer accident thermal condition.

3.7.3 Storage Cask Drop

The storage cask is evaluated for a non-mechanistic drop as discussed in Section 2.3.3.2 and evaluated in the FuelSolutions™ Storage System FSAR. The accidental storage cask drop scenario is a postulated vertical drop onto the bottom end of the storage cask from a height of 36 inches. The storage cask end drop results in a canister assembly rigid-body response, characterized as a half-sine wave pulse with a peak acceleration of 28*g*. The FuelSolutions™ W21 canister is evaluated for the postulated storage cask end drop scenario using equivalent static loads. The equivalent static end drop accelerations are equal to the peak accelerations multiplied by a Dynamic Load Factors (DLFs) to account for possible dynamic amplification

within the canister. The maximum DLF for an undamped system subjected to a half-sine wave pulse is 1.75 (Figure 2.15 of NUREG/CR-3966[26]). Therefore, the maximum equivalent static acceleration for the W21 canister shell and basket assemblies due to the postulated storage cask end drop is 49*g*. A bounding storage cask end drop equivalent static acceleration of 50*g* is conservatively used for the evaluation of the W21 canister.

3.7.3.1 Canister Shell Assembly

The two bounding W21 canister shell assembly designs discussed in Section 3.1.1.1 (e.g., "bounding" canister and W21T-LL canister) are evaluated for a bounding 50*g* bottom end drop using finite element analysis. The stresses in all of the canister shell components are evaluated using the axisymmetric finite element models discussed in Section 3.9.3.1.

In the event of a storage cask bottom end drop, the canister is supported by the crush pipes located in the bottom end of the storage cask. The storage cask crush pipes provide uniform support over the outer 14-inch radius of the canister bottom plate. As discussed in Section 3.9.3.1, uniform gap element support is assumed over the entire surface of the bottom end plate, rather than just the outer 14.0 inches of the canister radius. However, this difference has no significant impact on the resulting stresses in the bottom region of the canister shell due to the rigidity of the canister shell bottom end plates.

The load from the W21 canister contents (basket assembly and SNF assemblies) is supported on the bottom end of the cavity. The load from the contents is modeled as a uniform pressure on the inner surface of the bottom end closure. For the "bounding" axisymmetric model which applies to all W21 canister types except for the W21T-LL, a bounding payload weight of 57.0 kips is conservatively used. For the W21T-LL canister shell analysis, a bounding contents weight of 51.0 kips is conservatively used. The resulting pressure loads applied to the bottom end closure of the finite element models are 865.5 psi for the "bounding" model and 774.5 psi for the W21T-LL model. A vertical acceleration of 50*g* is applied to the models to account for the self-weight of the shell assemblies. The bounding canister shell stress intensities resulting from the 50*g* bottom end drop load are reported in Table 3.7-4. The results show that all stresses within the canister shell are lower than the Service Level D allowable stresses.

For the postulated storage cask end drop condition, an additional stress evaluation is performed for the canister shell top inner closure plate and weld using hand calculations, conservatively assuming no support from the top shield plug assembly. The maximum bending stress in the top inner closure plate for the 50*g* end drop is calculated assuming the plate behaves as a simply supported circular plate subjected to a uniform pressure load due to its own self weight based on Roark (Table 24, case 10a). The maximum bending stress in the top inner closure plate for this condition is 18.8 ksi versus an allowable Service Level D primary membrane plus bending stress intensity of 69.3 ksi for SA-240, Type 304 stainless steel at 300°F. The corresponding shear stress in the top inner closure weld 0.8 ksi versus an allowable weld shear stress of 22.1 ksi, based on SA-240, Type 304 stainless steel at 300°F with a 0.9 weld efficiency factor as discussed in Section 3.1.2.2 of this FSAR. Therefore, the top inner closure plate and weld

[26] U.S. Nuclear Regulatory Commission, *Methods for Impact Analysis of Shipping Containers*, NUREG/CR-3966, November 1987.

stresses due to the 50*g* bottom end drop load, calculated assuming no support from the top shield plug, are lower than the Service Level D allowable stresses.

The bending stress in the canister shell top carbon steel shield plug assembly due to the 50*g* bottom end drop load is determined using hand calculations. The top shield plug is conservatively assumed to support the entire weight of the top inner and outer closure plates in addition to its own weight. The stresses in the carbon steel top shield plug are calculated using Roark, Table 24, case 10a, treating the shield plug as a simply supported circular plate subjected to a uniform pressure load. The uniform pressure load acting on the 7.25-inch thick carbon steel top shield plug due to a 50*g* end drop load, including the load from the top inner and outer closure plates, is 146.5 psi. The resulting maximum bending stress is 3.6 ksi versus an allowable Service Level D primary membrane plus bending stress intensity of 60.8 ksi for A36 carbon steel at 300°F.

The stability of the W21 canister shell is evaluated for the postulated storage cask end drop to assure that it has adequate design margin against buckling. The end drop condition results in the highest axial compressive stresses in the canister shell. Internal pressure loads that result in tensile stresses in the shell, thereby offsetting the impact loads, are conservatively ignored for the buckling evaluation. The canister shell is loaded by its self-weight and the weight of the top closure components for a bottom end drop. The load from the canister payload does not load the canister shell since it is supported directly by the bottom end closure. The buckling evaluation of the canister shell is performed in accordance with ASME Code Case N-284.

The results of the storage cask bottom end drop show that the maximum axial compressive stress in the shell is 6.8 ksi. The calculated axial compressive stress is adjusted to account for a factor of safety and capacity reduction factors. A factor of safety of 1.34 is used for accident conditions in accordance with ASME Code Case N-284. Therefore the shell axial stress is multiplied by 1.34. In addition, the capacity reduction factor for axial compression, $\alpha_{\phi L} = 0.207$, is based on the canister shell geometry and material properties in accordance with Paragraph -1511 of ASME Code Case N-284, resulting in an adjusted shell compressive stress of 44.0 ksi.

The theoretical buckling stress is calculated in accordance with Paragraph -1712 of ASME Code Case N-284 to be 306.5 ksi, based on nominal shell dimensions and material properties at a bounding temperature of 400°F. The resulting canister shell buckling interaction ratio for the bounding 50*g* bottom end drop is:

$$\frac{44.0}{306.5} = 0.14 \leq 1.0$$

Therefore, the W21 canister shell does not buckle due to the bounding 50*g* end drop load.

3.7.3.2 Canister Basket Assembly

3.7.3.2.1 Spacer Plates

For the storage cask bottom end drop load condition, each of the W21 spacer plates support only its own weight, except for the bottom end spacer plate, which supports the guide tube assemblies via the attachment brackets. The fuel assemblies within the basket assembly are supported in the

longitudinal direction by the canister bottom end closure. Therefore, the fuel assemblies do not load the spacer plates in the event of a bottom end drop. Each spacer plate in both the W21T and W21M basket assemblies is supported in the longitudinal direction by the eight support rod assemblies. The W21 spacer plates are conservatively designed for a bounding 50*g* bottom end drop acceleration load.

For the storage cask bottom end drop, the W21 spacer plate loading is proportional to the vertical dead weight loading and boundary conditions are identical to those for vertical dead weight. However, the attachment brackets which secure the guide tubes to the bottom end spacer plate are not designed to withstand the bottom end drop load, but will fail at an acceleration load less than the 50*g* bottom end drop load. The lowest design margin in the W21 guide tube attachments for vertical dead weight loading occurs in the welded connection between the bottom space plate and the guide tube. However, weld efficiency factors, excess weld deposition, and higher weld metal material properties, make prediction of the weld failure load difficult. Therefore, the upper bound ultimate load capacity of the guide tube attachment brackets is conservatively based on the ultimate shear capacity of the 5/16-inch wide “necked-down” shear section. The ultimate load capacity of the attachment bracket is determined to be 17.9*g*. An upper bound failure load of 20*g* is conservatively assumed.

The W21 spacer plate bottom end drop stresses are determined by scaling the maximum vertical dead weight stresses. The maximum stresses in the bottom end stainless steel spacer plate for the bottom end drop condition are taken as the larger of 20 times the bottom end spacer plate (i.e., with guide tubes attached) vertical dead weight stresses or 50 times the stainless steel spacer plate (i.e., spacer plate self-weight only) vertical dead weight stresses. The bottom end drop stresses in the other W21 carbon steel and stainless steel spacer plates are equal to 50 times the maximum vertical dead weight stresses. The maximum stresses in the W21 spacer plates due to the storage cask bottom end drop are presented in Table 3.7-5. The results show that the W21 spacer plate stresses due to the storage cask bottom end drop are less than the Service Level D allowable stresses.

3.7.3.2.2 Support Rod Assemblies

For the postulated storage cask end drop condition, the W21 support rod assemblies (e.g. support rod segments and support sleeves) provide longitudinal support for the spacer plates. The stability of the support rod assemblies is of primary importance for the storage cask end drop condition since they preserve basket geometry, thus maintaining criticality safety after the postulated storage cask end drop condition.

The W21 support rod assembly components (i.e., support rod segments and support sleeves) are evaluated for the postulated storage cask end drop condition in this section as a beam-column system in accordance with NUREG/CR-6322,[27] which uses the criteria of Section III, Appendix F, Article F-1334.5, of the ASME Code for linear type component supports subjected to combined axial compression and bending. As discussed in Section 3.7.3, the storage cask end drop equivalent static acceleration load is 47*g*. The W21 support rod assemblies are conservatively evaluated for a bounding equivalent static end drop load of 50*g*.

[27] NUREG/CR-6322, UCRL-ID-119697, *Buckling Analysis of Spent Fuel Basket*, Lee, A. S., and Bumpas, S. E., U.S. Nuclear Regulatory Commission, May 1995.

In addition to the 50*g* end drop, the W21 support rods are evaluated for a 20*g* end drop, which represents the maximum load that can be supported by the connection of the guide tubes to the bottom spacer plate. Therefore, at 20*g*, support rod loading from the bottom spacer plate includes the weight of the guide tubes. Because this additional weight is applied to the bottom plate only, the sleeves are not affected. The 50*g* end drop represents the maximum load level expected for this accident condition and does not include the weight of the guide tubes.

Of all eight W21 basket assembly configurations, the W21M-LD basket assembly support rods are controlling for the storage cask end drop since the W21M-LD basket assembly is the heaviest and the longest, and the strength of the W21M support rod assembly materials is lower than that of the W21T support rod assembly. Therefore, the structural evaluation of the W21M-LD support rod assemblies for the storage cask end drop bounds that of all other W21M and W21T support rod assemblies.

Support Sleeves

As discussed in Section 3.1.1.2, support sleeves are used to maintain the longitudinal position of the carbon steel spacer plates within each support rod span (i.e., the span between stainless steel spacer plates). In the event of an end drop, the loads from the carbon steel spacer plates and support sleeves within a span are carried through the support sleeves to the lower stainless steel spacer plate, which transfers the loads into the support rod segments. The highest support sleeve stresses due to the postulated storage cask end drop, within each support rod span, occurs in the support sleeve at the bottom end of the span. A free body diagram of the support sleeves within a typical support rod span is shown in Figure 3.7-1.

The support sleeve axial and bending loads from the ¾-inch thick carbon steel spacer plates are obtained from the spacer plate 50*g* end drop finite element analysis reaction loads. The axial and bending loads from each of the carbon steel spacer plates are 1.88 kips and 5.05 in-kips for the case of lower bound rod stiffness For fixed plate boundaries, maximum axial and bending loads are 1.86 kips and 5.14 in-kips, respectively. The total axial load on each of the support sleeves within a support rod span is calculated as follows:

$$P_i = 50g \times W_{si} + R_{pi-1} + P_{si-1}$$

where W_{si} is the weight of support sleeve *i*, R_{pi-1} is the reaction load from the carbon steel spacer plate above support sleeve *i*, and P_{si-1} is the axial load from the support sleeve above sleeve *i*. The bending moment reaction at each spacer plate is distributed to the upper and lower support sleeves based on their relative bending stiffness. Since each support sleeve has the same section properties, the bending stiffness is inversely proportional to the sleeve length.

The envelope support sleeve loads for the 50*g* end drop load are 16.36 kips (4.25 in. span) and 3.63 in-kips (1.25 in. span). The corresponding axial compressive and bending stresses in the most highly loaded W21 support sleeve are 7.34 ksi and 2.11 ksi, respectively. Since the 4.25-inch support sleeve span is not the longest in the basket, a bounding length of 4.6 inches is conservatively used to develop lower bound allowable stresses for the support sleeve buckling evaluation.

Per NUREG/CR-6322, members subjected to combined compression and bending must satisfy interaction equations (26), (27) and (28) as follows:

$$\frac{f_a}{F_a} + \frac{C_{mx} f_{bx}}{\left(1 - \frac{f_a}{F'_{ex}}\right) F_{bx}} + \frac{C_{my} f_{by}}{\left(1 - \frac{f_a}{F'_{ey}}\right) F_{by}} \le 1.0 \qquad \text{(Interaction Eq. 26)}$$

$$\frac{f_a}{2 \times 0.6 S_y} + \frac{f_{bx}}{F_{bx}} + \frac{f_{by}}{F_{by}} \le 1.0 \qquad \text{(Interaction Eq. 27)}$$

$$\text{If } \frac{f_a}{F_a} \le 0.15, \frac{f_a}{F_a} + \frac{f_{bx}}{F_{bx}} + \frac{f_{by}}{F_{by}} \le 1.0 \qquad \text{(Interaction Eq. 28)}$$

A C_m value of 0.85 is applicable for members in frames not braced against sidesway. Per NUREG/CR-6322, the allowable compressive stress is defined as follows:

$$F_a = \frac{P_{EQ40}}{A_g}$$

where:

A_g = 2.228 in^2, the gross area of support sleeve.

P_{EQ40} is the allowable compressive load determined in accordance with Equation 40 of NUREG/CR-6322 as follows:

$$P_{EQ40} = \frac{(P_{EQ45})(P_{EQ33})}{P_{EQ43}} = 24.1\text{kips}$$

where P_{EQ45}, P_{EQ33}, and P_{EQ43} are the allowable compressive loads from Equations (45), (33), and (43) of NUREG/CR-6322, which are calculated as follows:

$$\lambda = \left(\frac{KL}{r}\right)\left(\frac{1}{\pi}\right)\sqrt{\frac{S_y}{E}} = 0.0374$$

$$P_{EQ45} = \left(0.47 - \frac{120\lambda}{444\sqrt{2}}\right) S_y A_g = 16.2 \text{ kips} \quad (\text{for } \lambda \le \sqrt{2})$$

$$P_{EQ33} = \frac{(1 - \lambda^2/4)}{1.11 + 0.5\lambda + 0.17\lambda^2 - 0.28\lambda^3} S_y A_g = 30.6 \text{ kips} \quad (\text{for } 0 \le \lambda \le 1)$$

$$P_{EQ43} = \frac{(1 - \lambda^2/4)}{\frac{5}{3} + \frac{3}{8}\left(\frac{\lambda}{\sqrt{2}}\right) - \frac{1}{8}\left(\frac{\lambda}{\sqrt{2}}\right)^3} S_y A_g = 20.6 \text{ kips} \quad (\text{for } \lambda \le \sqrt{2})$$

where:

K = 1.2, Effective length factor for a fixed-slider boundary condition.

L = 4.60 inches, Maximum support sleeve length.

r = 1.164 inches, Support sleeve radius of gyration.

A_g = 2.228 in^2, Support sleeve gross area.

S_y = 15.5 ksi, Yield strength of Type 304L stainless steel at 600°F.

E = 25.3x10^3 ksi, Elastic modulus of Type 304L stainless steel at 600°F.

Therefore, the allowable compressive stress for the most heavily loaded support sleeve is

$$F_a = 24.1 \text{ kips} \div 2.228 \text{ in}^2 = 10.8 \text{ ksi.}$$

The Euler buckling stress, including a 1.46 factor of safety for stainless steel material and hypothetical accident conditions, per Section 6.32 of NUREG/CR-6322, is defined as:

$$F'_e = \frac{\pi^2 E}{1.46(KL/r)^2} = 7{,}605 \text{ ksi}$$

The allowable bending stress for compact sections, F_b, is defined in NUREG/CR-6322 as:

$$F_b = fS_y = 21.0 \text{ ksi}$$

where the plastic shape factor, f, is given by Table 1, Case 15, of Roark as:

$$f = 1.698\left(\frac{R_o^4 - R_o R_i^3}{R_o^4 - R_i^4}\right) = 1.353$$

where R_o and R_i are the outer and inner radii of the support sleeve, respectively.

Interaction equations (26) and (27) are satisfied as follows, where a C_m value of 0.85 is applicable in equation (26) for members in frames not braced against sidesway:

$$\frac{7.34}{10.8} + \frac{(0.85)(2.11)}{\left(1 - \frac{7.34}{7{,}605}\right)(21.0)} = 0.77 \qquad (26)$$

$$\frac{7.34}{2 \times 0.6(15.5)} + \frac{2.11}{21.0} = 0.50 \qquad (27)$$

Therefore, the most heavily loaded W21M-LD support sleeves meet the stress acceptance criteria for the bounding 50*g* end drop load. The support sleeve end drop interaction ratios for all other W21M and W21T assemblies are bounded by those calculated for the W21M-LD design.

Support Rod Segments

In the event of an end drop, each support rod segment is loaded by its self-weight in addition to the upper joint loads. The support rod segment upper joint loads include the reaction loads from the stainless steel spacer plate, the loads from the upper support rod segment, and the support sleeve loads from the upper support rod span. The support sleeve loads from the upper support rod span include the inertial load of the carbon steel spacer plates and support sleeves, which are transferred through the support sleeves down to the supporting stainless steel spacer plate, as shown in Figure 3.7-1. The most heavily loaded support rod segment is closest to the impacting end since it supports the inertial load of the most spacer plates and support sleeves. However, the unsupported length of the support rod end segment is smaller than that of the interior support rod

segments resulting in lower allowable stresses. Therefore, each of the support rod segments is evaluated for the end drop to demonstrate structural adequacy.

The support rod segment axial and bending loads from the ¾-inch thick carbon steel spacer plates and the 2-inch thick stainless steel spacer plates are obtained by scaling reactions from the spacer plate vertical deadweight finite element analyses. Two end drop load levels are evaluated: 20*g* and 50*g*. The 20*g* end drop represents the maximum load that can be supported by the connection of the guide tubes to the bottom spacer plate. Therefore, at 20*g*, reactions from the bottom spacer plate include the weight of the guide tubes. The 50*g* end drop represents the maximum load level expected for this accident condition and does not include the weight of the guide tubes. The spacer plate analysis considers a lower bound support rod bending stiffness to model the plate rotational boundary conditions and also considers fixed rotational boundaries. The axial force and bending moment reaction loads at the rod or sleeve connection from each of the spacer plates are summarized in Table 3.7-1 for the 20*g* and 50*g* end drop conditions.

The maximum compressive stress in each of the seven support rod segments due to the 50*g* end drop load is:

$$f_a = \frac{P}{A} = \frac{\sum_{i=1}^{7}(P_{Ri} + P_{ji-1})}{A}$$

where P_{Ri} is the inertial load from support rod segment i, P_{ji-1} is the axial load from joint (i-1), and A is the gross area of the support rod segment. The support rod segment inertial load is equal to the support rod weight multiplied by the 20*g* or 50*g* equivalent static end drop load. The joint axial load includes the 2-inch thick stainless steel spacer plate reaction load and the axial load from the support sleeves and ¾-inch thick carbon steel spacer plates in the span above the joint. The bending moments from the spacer plates are distributed to the adjacent support rod segments based on their relative rigidities. Each support rod segment is conservatively assumed to carry the entire bending moment reaction from the adjacent 2-inch thick stainless steel spacer plates.

The allowable support rod stresses for the end drop are calculated in accordance with NUREG/CR-6322, as described above for the support sleeves, and summarized in Table 3.7-2. As discussed previously in this section, a bounding support rod end drop evaluation is performed based on the W21M support rods since they are the most highly loaded and have lower material strength properties than the W21T support rods. The bounding support rod end drop evaluation utilizes material properties at a temperature of 600°F, which bounds the maximum support rod temperatures for all normal on-site transfer and storage thermal conditions.

The calculated stresses, allowable stresses, and interaction equations for the support rod segments in the W21M-LD basket design are summarized in Table 3.7-3. The results show that the highest interaction ratio of 0.84 occurs in the support rod segment number 6 (i.e., first interior span at the bottom end of the basket) for the 50*g* end drop. Similarly, the highest interaction ratio at 20*g* (i.e., failure load for guide tube attachment brackets) is 0.73. The maximum support rod interaction ratios for both conditions are lower than the limit of 1.0. Therefore, the W21 support rods meet the buckling design criteria of NUREG/CR-6322 for the bounding 50*g* storage cask end drop load.

3.7.3.2.3 Guide Tubes

For the postulated storage cask bottom end drop condition, the W21 guide tube assemblies are loaded only by their own weight. The top and bottom end details of all W21 guide tube assemblies are identical and all W21 guide tubes are fabricated from the same material. Therefore, the most heavily loaded W21 guide tubes are the W21M-LD guide tubes since they are the longest and the heaviest.

Guide Tube Stresses

The most heavily loaded W21 guide tubes are evaluated for the postulated storage cask bottom end drop condition using hand calculations. A bounding equivalent static acceleration load of 50*g* is conservatively used for the guide tube bottom end drop evaluation. The limiting guide tube vertical deadweight stress is uniaxial compression at the bottom end which bears on the supporting canister shell bottom end closure. The W21M-LD guide tube assemblies are the heaviest, weighing 210 pounds each. The guide tube area at the bottom end is reduced due to the 6.5-inch wide cutouts on all four faces. The uniform axial compressive stress in the guide tube due to a 50*g* HAC end drop load is calculated as follows:

$$f_a = \frac{WG}{A_b} = 14.0 \text{ ksi}$$

where:

W = 210 lb., weight of heaviest guide tube

A_b = guide tube area, less cutouts

= 4(8.95 + 0.075)(0.075) - 4(6.5)(0.075)

= 0.75 in^2

The corresponding Service Level D allowable primary membrane stress intensity, conservatively based on Type 316 stainless steel material properties at 700°F, is 39.1 ksi. Therefore, the W21 guide tubes meet the stress acceptance criteria for the postulated storage cask bottom end drop condition.

Guide Tube Buckling

The elastic stability of the most heavily loaded W21 guide tube is evaluated for the postulated storage cask end drop condition using hand calculations. The lowest factor of safety against buckling occurs at the bottom end of the guide tube where the axial compressive stresses are highest and the free edges in the region of the cutouts result in the lowest theoretical buckling stress. The critical guide tube buckling stress is calculated treating the bottom end of the guide tube as a rectangular plate, simply supports on three edges and free on the fourth edge, and subjected to uniform axial compressive loading (Roark, Table 35, Case 1d) as follows:

$$\sigma = K \frac{E}{1-\nu^2}\left(\frac{t}{b}\right)^2 = 206 \text{ ksi}$$

where:

E = 24.8×10^6 psi, elastic modulus of Type 316 stainless steel at 700°F,

t = 0.075 in., guide tube thickness,

b = (9.025 - 6.5)/2 = 1.263 in., width of the corner piece of guide tube panel,

ν = 0.29, Poisson's ratio

K = 2.16 for a / b = 1/1.263 = 0.8

Per NUREG/CR-6322, the design allowable is limited to 2/3 of the theoretical buckling stress, or 137 ksi. Therefore, the minimum design margin for buckling of the most heavily loaded W21 guide tube is +8.79.

3.7.4 Storage Cask Tip-Over

The storage cask is evaluated for a postulated accidental tip-over event as discussed in Section 2.3.3.3 and evaluated in Section 3.7.4 of the FuelSolutions™ Storage System FSAR. The storage cask tip-over event results in a peak rigid body acceleration of 21.9g at the top end of the storage cask, with a ramped load having a 15 msec rise time characterized as an isosceles triangular pulse with a duration of 0.010 seconds and a peak acceleration of 41.4*g*. The structural evaluation of the W21 canister for the postulated tip-over condition is performed using equivalent static loads. The equivalent static acceleration load is equal to the peak rigid-body acceleration multiplied by a DLF to account for possible dynamic amplification within the canister assembly. For transverse natural frequencies of the W21 canister assembly are all greater than 100 Hz. Per Figure 2.1 of NUREG/CR-3966, the maximum DLF for t_r/T greater than or equal to 1.5 (e.g., for natural frequencies of 100 Hz and greater) is approximately 1.2. Therefore, the maximum equivalent static acceleration at the top end of the canister for the storage cask tip-over is 26.3*g*. A bounding equivalent static acceleration load of 30*g* is conservatively used for the W21 canister tip-over structural evaluation.

3.7.4.1 Canister Shell Assembly Tip-over Analysis

For the postulated storage cask tip-over condition, the W21 canister shell assembly is supported by the two storage cask rails which run the full length of the canister shell and are located at 22.5° on both sides of the canister bottom centerline. The canister shell is loaded by its own weight in addition to the weight of the basket assembly and SNF assemblies contained in the canister shell cavity. The structural evaluation of the W21 canister shell assembly for the postulated storage cask tip-over load condition is performed using the three-dimensional ½-symmetry finite element model described in Section 3.9.3.2. This model represents the top end region of the W21M-LS canister shell and basket assembly. Since the tip-over loads at the bottom end of the canister shell assembly are much lower than those at the top end, the stresses in the bottom end of the canister shell are bounded by those in the top end region and, consequently, need not be evaluated.

As discussed in Section 3.9.3.2, the W21M-LS canister is selected as the bounding design since it has the largest overall combined weight for the basket assembly and fuel and the heaviest top shield plug. The W21M-LS top shield plug and basket assembly spacer plates are included in the finite element model and connected to the canister shell with gap elements in order to accurately capture the non-linear interaction between the these components and the canister shell for the tip-over load condition. In addition, radial gap elements are used to model the non-linear support interface between the outside of the canister shell and the storage cask rail supports. A more detailed description of the W21 canister shell three-dimensional ½-symmetry finite element model is provided in Section 3.9.3.2.

For the tip-over condition, the canister shell is loaded by its own weight plus the weight of the basket assembly and fuel. The inertial loads of the canister shell, top outer and inner closure plates, the shield plug, and the self weight of the spacer plates are accounted for by applying an appropriate acceleration in the direction of the loading. The inertial loads of the fuel assembly and the guide tube are applied as uniform pressure loads over the width of the supporting spacer plate ligaments, as shown in Figure 3.9-7. The ligament pressure loads are calculated for each spacer plate based upon the guide tube and fuel tributary weights presented in Table 3.9-3.

The stresses in the canister shell due to the tip-over load condition are calculated using a linear-elastic static analysis. The maximum stresses in the canister shell due to the tip-over condition are summarized in Table 3.7-4. The maximum stresses in the W21 canister shell due to the bounding 30*g* tip-over load are shown to be lower than the corresponding Service Level D allowable stresses.

3.7.4.2 Basket Assembly Tip-over Analysis

3.7.4.2.1 Spacer Plates

When subjected to tip-over loading, the W21 spacer plates are relied upon to support and maintain the positions of the guide tube assemblies and SNF assemblies for criticality control. The W21 spacer plates are loaded by their own weight and the weight of the SNF assemblies, guide tube assemblies, and support rod assemblies. The spacer plates are supported by the canister shell in the region of impact and the canister shell is supported by two storage cask rails.

As discussed in Section 3.7.4, the W21 basket assembly is designed for a bounding 30*g* tip-over load. A linear-elastic stress analysis is performed based on a uniform fuel load assumption. In addition, a plastic stress analysis is performed assuming the fuel load is applied to the spacer plates as concentrated loads at the fuel grid spacer locations. The primary purpose of the plastic stress analysis is to determine the maximum spacer plate permanent deformation resulting from the storage cask tip-over for consideration in the criticality evaluation. Lastly, buckling evaluations of the spacer plates are performed for the storage cask tip-over, considering both beam-column buckling in accordance with NUREG/CR-6322 and general instability in accordance with Appendix F of the ASME Code.

Tip-over Elastic Stress Analysis

The W21 spacer plate stress evaluation for the bounding 30*g* storage cask tip-over load is performed using an elastic system analysis based on a uniform fuel load assumption (i.e., spacer plate fuel loads proportional to spacer plate longitudinal pitch). For the spacer plate tip-over evaluation, the spacer plate is assumed to be supported only at the locations of the storage cask

rails, conservatively neglecting the support provided by the canister shell. This is conservative since the assumed boundary conditions result in more concentrated reaction loads which produce higher stresses in the spacer plates.

Only the most highly loaded W21 carbon steel and stainless steel spacer plates are evaluated for the 30*g* storage cask tip-over load. For the tip-over condition, the acceleration load varies in magnitude, from approximately zero at the bottom end of the canister to the maximum acceleration at the top end of the canister. The impact load for each spacer plate is equal to the product of the transverse acceleration at its longitudinal location and the spacer plate tributary weight. The W21 spacer plates having the highest tributary weights are those near the mid-length of the basket assembly since they have the largest longitudinal pitch. Therefore, in order to provide a bounding analysis for the postulated storage cask tip-over condition, the bounding 30*g* tip-over acceleration, which occurs at the top end of the canister, is applied to the W21 spacer plates in the basket mid-region which support the largest tributary weight.

As discussed in Section 3.9.1, the W21 carbon steel and stainless steel spacer plates with the highest tributary weights are those in mid-region of the W21M-SD or W21T-SL basket assembly. The most highly loaded carbon steel and stainless steel spacer plates have total tributary weights of 1,587 pounds and 2,106 pounds, respectively. Therefore, the most highly loaded W21 carbon steel and stainless steel spacer plates support total loads for the 30*g* storage cask tip-over of 47.6 kips and 63.2 kips, respectively.

The W21 spacer plate tip-over elastic stress analysis is performed using the plane stress finite element model described in Section 3.9.3.3.1. The spacer plate loading from the support rod assemblies, guide tube assemblies, and fuel assemblies are determined for the 30*g* tip-over load as described in Section 3.9.3.3.1. Linear-elastic static analyses are performed and the resulting spacer plate stresses are evaluated using linear stresses as discussed in Section 3.9.2.3.

The results of the W21 spacer plate tip-over elastic system stress analyses show that the total reaction loads from the finite element solutions are equal to the tip-over impact loads calculated above. The maximum primary membrane and primary membrane plus bending stress intensities in the carbon steel spacer plates are 18.4 ksi and 46.0 ksi, respectively. The Service Level D allowable primary membrane and primary membrane plus bending stress intensities for the carbon steel spacer plate material at 700°F are 75.4 ksi and 113.1 ksi, respectively. Therefore, the stresses in the most highly loaded W21 carbon steel spacer plate due to bounding 30*g* storage cask tip-over loading are less than the corresponding Service Level D allowable stress intensities.

The maximum primary membrane and primary membrane plus bending stress intensities in the most highly loaded W21 stainless steel spacer plate for the bounding 30*g* tip-over loading are 9.3 ksi and 23.3 ksi, respectively. The Service Level D allowable primary membrane and primary membrane plus bending stress intensities for SA-240, Type XM-19 stainless steel at 700°F are 60.6 ksi and 90.8 ksi, respectively. Therefore, the maximum primary membrane and membrane plus bending stress intensities in the most highly loaded W21 stainless steel spacer plate due to the bounding 30*g* storage cask tip-over load are less than the corresponding Service Level D allowable stress intensities.

Tip-over Plastic Stress Analysis

The W21 spacer plates are evaluated for the bounding 30*g* storage cask tip-over load using plastic system analysis. The purpose of this plastic analysis is to determine the maximum permanent deformation of the W21 spacer plates due to the storage cask tip-over loading. For this analysis, the loads from the SNF assemblies are conservatively applied to the supporting basket assembly structure as concentrated loads at the fuel grid spacer locations. Since the W21 canisters are designed for a range of fuel types, the total SNF assembly weight tributary to each grid spacer and the location of the grid spacers relative to the basket assembly spacer plates can vary. The worst case loading for each W21 spacer plate results from the SNF fuel with the highest grid spacer tributary weight for the fuel assembly grid spacer located directly over that spacer plate. As discussed in Section 3.9.1, the maximum spacer plate stresses under these assumed loading conditions occur in the W21M-SD or W21T-SL basket assemblies loaded with WE 15x15 fuel with control components. The analysis for the postulated storage cask tip-over condition is performed using a bounding 30*g* tip-over acceleration, occurring at the top end of the canister, which is conservatively applied to the W21 spacer plates in the W21M-SD and W21T-SL basket mid-regions which support the largest in-plane tributary weight.

The W21 spacer plates plastic stress analysis for the storage cask tip-over condition is performed using the ½-symmetry multi-span plane-stress finite element model described in Section 3.9.3.3.3. The finite element model includes three spacer plates; the center spacer plate over which the fuel grid spacers are assumed to be positioned, and the adjacent spacer plates on either side. For the evaluation of the W21 carbon steel spacer plates, all spacer plates are assumed to be ¾-inch thick carbon steel plates with at uniform pitch of 5.00 inches. Similarly, for the evaluation of the W21 stainless steel plates, the center spacer plate is modeled as a 2.00-inch thick stainless steel plate and the adjacent plates are modeled as ¾-inch thick carbon steel plates. The pitch between the W21 stainless steel spacer plate and adjacent carbon steel spacer plates is modeled as 5.475 inches. For both models, the W21 guide tubes extend 2.50 inches beyond the centerlines of the outer spacer plates on each side. The finite element model construction, material properties, boundary conditions, and loading are described in detail in Section 3.9.3.3.3.

For the W21 spacer plate tip-over plastic analysis, the model loads are ramped up to 30*g* and then reduced to 1*g* in order to determine permanent deformations. The results of the W21 carbon steel and stainless steel spacer plate plastic tip-over analyses show that plastic strain in the most highly loaded spacer plates occur only in a few very local regions. The maximum equivalent plastic strain in the most highly loaded W21 carbon steel and stainless steel spacer plates resulting from the bounding 30*g* tip-over load are 1.6% and 0.8%, respectively. Per Section II, Part A of the ASME Code, the minimum elongation of SA-517, Grade P carbon steel and SA-240, Type XM-19 stainless steel are 16% and 35%, respectively. Therefore, the plastic strain in the most highly loaded W21 carbon steel and stainless steel spacer plates is much less than that corresponding to ultimate tensile failure. The maximum permanent deformation in the most highly loaded W21 carbon steel and stainless steel spacer plates resulting from the bounding 30*g* tip-over load are 0.005 inches and 0.002 inches, respectively.

Tip-over Buckling Analysis

The buckling evaluation of the spacer plates for the postulated storage cask tip-over condition considers beam-column buckling in accordance with NUREG/CR-6322 and general plastic instability in accordance with Appendix F of the ASME Code.

The W21 spacer plates are evaluated for buckling due to the storage cask tip-over condition as linear type supports subjected to combined axial compression and bending in accordance with NUREG/CR-6322. Buckling evaluations are performed for the most highly loaded ligaments in both the W21 carbon steel and stainless steel spacer plates for the bounding 30*g* tip-over loading both with and without the bounding normal thermal loads superimposed. For this buckling evaluation, the spacer plate stresses are calculated using an elastic system analysis.

The maximum stresses in the W21 spacer plates due to the storage cask tip-over are evaluated using interaction equations (26), (27), and (28) of NUREG/CR-6322, defined as follows:

$$\frac{f_a}{F_a} + \frac{C_{mx} f_{bx}}{\left(1 - \frac{f_a}{F'_{ex}}\right) F_{bx}} + \frac{C_{my} f_{by}}{\left(1 - \frac{f_a}{F'_{ey}}\right) F_{by}} \le 1.0 \qquad \text{(Eq. 26)}$$

$$\frac{f_a}{2 \times 0.6 S_y} + \frac{f_{bx}}{F_{bx}} + \frac{f_{by}}{F_{by}} \le 1.0 \qquad \text{(Eq. 27)}$$

If $f_a/F_a \le 0.15$, then equation (28) may be used in lieu of equations (26) and (27):

$$\frac{f_a}{F_a} + \frac{f_{bx}}{F_{bx}} + \frac{f_{by}}{F_{by}} \le 1.0 \qquad \text{if } \frac{f_a}{F_a} \le 0.15 \qquad \text{(Eq. 28)}$$

The allowable axial stress, F_a, bending stress, F_b, and Euler buckling stress, F_e', are calculated for all ligament sizes for both the W21 carbon steel and stainless steel spacer plate. Per NUREG/CR-6322, the allowable compressive stress for carbon steel and stainless steel spacer plates are defined as follows:

$$F_a = \frac{P_{33}}{A_g} \text{ (Carbon Steel)}$$

$$F_a = \frac{P_{40}}{A_g} \text{ (Stainless Steel)}$$

where, A_g is the gross area of the spacer plate ligament, and the maximum allowable loads, P_{33} and P_{40}, are the allowable compressive load determined in accordance with NUREG/CR-6322 as follows:

$$P_{33} = \frac{(1-\lambda^2/4)}{1.11+0.5\lambda+0.17\lambda^2-0.28\lambda^3} S_y A_g \quad (\text{for } 0 \le \lambda \le 1)$$

$$P_{40} = \frac{(P_{45})(P_{33})}{P_{43}}$$

where:

$$\lambda = \left(\frac{KL}{r_x}\right)\left(\frac{1}{\pi}\right)\sqrt{\frac{S_y}{E}}$$

$$P_{45} = \left(0.47 - \frac{120\lambda}{444\sqrt{2}}\right) S_y A_g \quad (\text{for } \lambda \le \sqrt{2})$$

$$P_{43} = \frac{(1-\lambda^2/4)}{\frac{5}{3}+\frac{3}{8}\left(\frac{\lambda}{\sqrt{2}}\right)-\frac{1}{8}\left(\frac{\lambda}{\sqrt{2}}\right)^3} S_y A_g \quad (\text{for } \lambda \le \sqrt{2})$$

where:

K = 0.65, Effective length factor for fixed-fixed support per Figure 6 of NUREG/CR-6322

L = 9.43 in., Unsupported length of spacer plate ligaments

r_x = $\sqrt{I_x / A_g}$ in., Ligament radius of gyration

I_x = $b^3t/12$, Ligament moment of inertia

A_g = bt, Ligament gross area

b = Ligament width
= 1.945 in., Center ligaments (hereafter referred to as Ligament "A")
= 1.345 in., Outermost ligaments (hereafter referred to as Ligament "B")

t = Spacer plate thickness
= 0.75 in., Carbon steel spacer plate
= 2.00 in., Stainless steel spacer plate

S_y = Spacer plate material yield strength at 700°F
= 83.0 ksi (carbon steel spacer plate)
= 36.3 ksi (stainless steel spacer plate)

E = Spacer plate material elastic modulus at 700°F
= $25.5(10)^3$ ksi (carbon steel spacer plate)
= $24.8(10)^3$ ksi (stainless steel spacer plate)

C_m = 0.85, Coefficient for members in frames where sidesway is permitted per NUREG/CR-6322

The Euler buckling stress, calculated in accordance with Section 6.32 of NUREG/CR-6322, is defined as follows:

$$F_e' = \frac{\pi^2 E}{1.46(KL/r_x)^2} \quad \text{(stainless steel)}$$

$$F_e' = \frac{\pi^2 E}{1.30(KL/r_x)^2} \quad \text{(carbon steel)}$$

The allowable bending stress for compact sections, F_b, is defined in NUREG/CR-6322 as:

$$F_b = fS_y$$

where the plastic shape factor is f=1.5 for a solid rectangular section per Roark, Table 1, Case 2.

The allowable stresses are calculated for each of the W21 spacer plate ligament types and summarized in Table 3.7-6.

As discussed previously, the spacer plate stresses used for the buckling evaluation are calculated using an elastic system analysis. The spacer plate stresses are determined for the bounding 30*g* tip-over load, both with and without thermal loading superimposed. The 30*g* tip-over loads for the spacer plates are calculated and applied to the W21 spacer plate plane stress finite element model as described in Section 3.9.3.3.1. The thermal gradient which is applied to the model is based on the temperature distribution in the hottest W21 carbon steel spacer plate for normal cold storage conditions. As discussed in Section 3.5.1.3.2, the normal cold storage thermal condition results in the highest spacer plate thermal stresses, and therefore, the worst case initial condition for spacer plate buckling. In order to facilitate application of the thermal gradient to the model, the spacer plate gradient is approximated using the following third order polynomial equation, which provides the temperature (T) as a function of the radial distance from the spacer plate centerline:

$$T(r) = 0.0342r^3 - 2.0138r^2 + 25.76r + 475.45$$

Figure 3.7-3 shows the design thermal gradient versus the actual W21 spacer plate temperatures for the normal cold storage thermal condition. A comparison of the thermal stresses calculated using the polynomial function and those from the actual thermal gradient shows that the design thermal gradient produces thermal stresses in the W21 carbon steel spacer plate which bound

those calculated for the normal cold storage thermal gradient. Therefore, the design thermal gradient is bounding.

The maximum axial compressive stress and bending stress in the W21 carbon steel and stainless steel spacer plate ligaments for the tip-over loading, both with and without thermal loading superimposed, are summarized in Table 3.7-7 along with the resulting interaction ratios. The results show that the highest interaction ratios resulting from the bounding 30*g* tip-over load are 0.31 in centermost (Ligament A) of the W21 carbon steel spacer plate for combined tip-over plus thermal loading and 0.70 in outermost (Ligament B) of the W21 stainless steel spacer plate for combined tip-over plus thermal loading. Therefore, the most highly loaded W21 spacer plate meet the buckling design criteria of NUREG/CR-6322 for the bounding 30*g* tip-over load.

In addition to the NUREG/CR-6322 elastic beam-column buckling analysis, general plastic instability of the W21 spacer plates is evaluated for the bounding 30*g* storage cask tip-over load, both with and without the bounding normal thermal loading, using plastic large deflection analyses. Since the longitudinal bending stiffness of the W21 carbon steel spacer plates is proportional to the plate thickness squared, the bending stiffness of the 2.00-inch thick W21 stainless steel spacer plates much greater than that of the ¾-inch thick W21 carbon steel spacer plates. In addition, the results of the W21 spacer plate elastic stress analysis for the tip-over load show that the spacer plate stress levels relative to the material yield strengths are comparable. Therefore, general instability will be controlled by the carbon steel spacer plates and the stainless steel spacer plates need not be evaluated.

For this analysis, the loads from the SNF assemblies are conservatively applied to the supporting basket assembly structure as concentrated loads at the fuel grid spacer locations. Since the W21 canisters are designed for a range of fuel types, the total SNF assembly weight tributary to each grid spacer and the location of the grid spacers relative to the basket assembly spacer plates can vary. The worst case loading for each W21 spacer plate results from the SNF fuel with the highest grid spacer tributary weight for the fuel assembly grid spacer located directly over that spacer plate. As discussed in Section 3.9.1, the controlling W21 basket configuration for this loading condition occurs in the W21M-SD or W21T-SL basket assemblies loaded with WE 15x15 fuel with control components. The bounding storage cask tip-over acceleration at the top end of the canister is 30*g*. For the W21 spacer plate plastic instability analysis, the bounding 30*g* tip-over acceleration is conservatively applied to the W21 spacer plates in the W21M-SD and W21T-SL basket mid-regions which support the largest tributary weight.

The W21 carbon steel spacer plate plastic large deflection buckling analysis for the storage cask tip-over condition is performed using the full multi-span shell finite element model described in Section 3.9.3.3.5. The finite element model includes three spacer plates; the center spacer plate over which the fuel grid spacers are assumed to be positioned, and the adjacent spacer plates on either side. For the evaluation of the W21 carbon steel spacer plates, all spacer plates are assumed to be ¾-inch thick carbon steel plates with at uniform pitch of 5.00 inches. The spacer plates are modeled using plastic shell elements which have both membrane and bending stiffness. The spacer plates are supported longitudinally at the locations of the support rods. In addition, the bending support provided by the support rods is modeled using spring elements. A lower bound support rod bending stiffness is conservatively used for this evaluation.

The bi-linear kinematic hardening material model with a 0.1% tangent modulus is conservatively used for the spacer plate and guide tube materials. For the tip-over loads without thermal, the

material properties at 700°F are assumed. For the combined tip-over plus thermal loading, the temperature dependent material properties from Section 3.3.1 are used for the spacer plates and guide tubes.

The fuel load is applied to the bottom panel of the guide tubes directly above the center spacer plate. The spacer plate self-weight and the weight of the guide tubes are accounted for by applying an in-plane acceleration load. The support rod loads are applied to the spacer plates at the nodes nearest the support rod centerlines. The support rod forces are calculated based upon the spacer plate tributary lengths. In addition to the in-plane model loading, a constant 10*g* longitudinal acceleration load is applied to the finite element model to introduce an initial eccentricity to the spacer plates.

The thermal gradient which is applied to the model is based on the temperature distribution in the hottest W21 carbon steel spacer plate for normal cold storage conditions. The bounding design thermal gradient discussed previously is conservatively used for this analysis. The finite element model construction, material properties, boundary conditions, and loading are described in detail in Section 3.9.3.3.5.

For the W21 spacer plate tip-over plastic large deflection buckling analysis, the loads are applied such that the variable "time" is equal to the load factor (i.e., time = 3.0 corresponds to 3 times the tip-over load). The 10*g* longitudinal acceleration and thermal gradient are applied as initial conditions (i.e., time = 0.01 seconds). All model in-plane loads are ramped up to three times the tip-over load (i.e., 90*g* at time = 3.00 seconds). Spacer plate plastic instability is indicated by numerical instability in the finite element solution (i.e., unconverged solution). The results show that the most highly loaded W21 carbon steel spacer plate fails due to plastic instability at load factors of 2.2 for the tip-over loading and 2.3 for tip-over plus thermal loading. The buckled shape of the W21 carbon steel spacer plate for the tip-over condition is shown in Figure 3.7-4. The spacer plate deflections are slightly higher for the case which includes thermal loading than for tip-over loading alone. However, the lowest buckling factor of safety occurs without thermal loading. This is due to the fact that the spacer plate is shown to buckle near the rail supports and thermal loading produces tensile stresses at the edge of the spacer plates which oppose the compressive stresses near the rail supports which result from the tip-over loads.

3.7.4.2.2 Support Rod Assemblies and Guide Tubes

The support rod assembly and guide tube loads due to the postulated storage cask tip-over condition are bounded by those due to the transfer cask side drop. Furthermore, the support rod assembly and guide tube boundary conditions for the storage cask tip-over are similar to those for the transfer cask side drop. Therefore, the support rod assembly and guide tube stresses need not be evaluated for the postulated storage cask tip-over condition.

3.7.5 Transfer Cask Drop

The transfer cask is evaluated for a postulated accidental side drop event as discussed in Section 2.3.3.2.2 and evaluated in Section 3.7.5 of the FuelSolutions™ Storage System FSAR. The accidental transfer cask drop scenario is a postulated side drop from a height of 72 inches. The transfer cask side drop results in a rigid body response, characterized as a half-sine wave shape with a duration of t_1 = 0.0225 msec and a peak acceleration of 46g. The FuelSolutions™ W21 canister is evaluated for the postulated transfer cask side drop scenario using equivalent

static loads. The equivalent static side drop acceleration is equal to the peak acceleration multiplied by a DLF to account for possible dynamic amplification within the canister. The maximum DLF for the W21 canister assembly is based on the natural frequencies of the W21 canister structural components. The lowest natural frequency of the W21 canister assembly is 111 Hz for the spacer plates. From Figure 2.15 of NUREG/CR-3966, the maximum DLF for a half-sine pulse load where t1/T - 2.5 (= 0.0225 x 111) or higher is 1.15. Therefore, the maximum equivalent static acceleration for the transfer cask side drop is 53*g*. The FuelSolutions™ W21 canister is evaluated for a bounding 60*g* side drop deceleration resulting from the postulated transfer cask side drop scenario in the following sections.

3.7.5.1 Canister Shell Assembly Side Drop Analysis

For the postulated transfer cask side drop condition, the W21 canister shell assembly is supported by the transfer cask inner shell and loaded by its own weight in addition to the weight of the basket assembly and SNF assemblies contained in the canister shell cavity. The W21 canister shell assembly is evaluated for the postulated transfer cask side drop analysis using a bounding equivalent static deceleration load of 60*g*. The side drop load condition is evaluated using the three-dimensional half-symmetry finite element model described in Section 3.9.3.2. This model represents the top end region of the W21M-LS canister shell and basket assembly. As discussed in Section 3.9.3.2, the W21M-LS canister is selected as the bounding design since it has the largest overall combined weight for the basket assembly and fuel and the heaviest top shield plug. The W21M-LS top shield plug and basket assembly spacer plates are included in the finite element model and connected to the canister shell with gap elements in order to accurately capture the non-linear interaction between the these components and the canister shell for the tip-over load condition. In addition, radial gap elements are used to model the non-linear support interface between the outside of the canister shell and inside shell of the transfer cask. A more detailed description of the W21 canister shell three-dimensional ½-symmetry finite element model is provided in Section 3.9.3.2.

For the transfer cask side drop condition, the canister shell is loaded by its own weight plus the weight of the basket assembly and fuel. The inertial loads of the canister shell, top outer and inner closure plates, the shield plug, and the self weight of the spacer plates are accounted for by applying an appropriate acceleration in the direction of the loading. The inertial loads of the fuel assembly and the guide tube are applied as uniform pressure loads over the width of the supporting spacer plate ligaments, as shown in Figure 3.9-7. The ligament pressure loads are calculated for each spacer plate based upon the guide tube and fuel tributary weights presented in Table 3.9-3.

The stresses in the canister shell due to the 60*g* side drop load condition are calculated using a linear-elastic static analysis. The maximum primary membrane and primary membrane plus bending stress intensities in the canister shell due to the 60g side drop are reported in Table 3.7-4. The results of the canister shell side drop analysis show that the maximum stresses are less than the corresponding Service Level D allowable stresses.

3.7.5.2 Canister Basket Assembly Side Drop Analysis

3.7.5.2.1 Spacer Plates

When subjected to the postulated transfer cask side drop loading, the W21 basket assembly spacer plates provide structural support for the spent fuel assemblies, guide tube assemblies, support rods, and support sleeves. The structural stability of the spacer plates is of primary importance for the side drop condition since the spacer plates are relied on to maintain the relative spacing of the poisoned guide tube assemblies and fuel assemblies and assure criticality safety. A rigorous structural evaluation of the W21 spacer plates is performed for a postulated transfer cask side drop condition. As discussed in Section 3.7.5, a bounding side drop load of 60*g* is used for the evaluation of the W21 basket assembly components for side drop.

Structural evaluations of the most highly loaded W21 spacer plates are performed for the postulated transfer cask side drop condition using two bounding fuel loading assumptions: (1) Uniform fuel loading assumption (i.e., fuel weight distributed uniformly to basket assembly spacer plates), and (2) Concentrated fuel loading at the fuel assembly grid spacers. The uniform fuel loading assumption is used for elastic system stress analyses in accordance with Appendix F of the ASME Code. The concentrated fuel loading assumption is used for plastic stress analyses to determine the maximum spacer plate permanent deformation in the most highly loaded W21 carbon steel and stainless steel spacer plates resulting from the 60*g* side drop load for consideration in the criticality evaluation. Finally, a buckling evaluation of the W21 spacer plates is performed which considers beam-column buckling in accordance with NUREG/CR-6322 (uniform fuel load), and general instability in accordance with Appendix F of the ASME Code (concentrated fuel load).

Elastic Stress Analysis - Uniform Fuel Loading

The W21 spacer plate side drop elastic stress analysis is performed using the plane stress finite element model described in Section 3.9.3. Only the most highly loaded W21 carbon steel and stainless steel spacer plates are evaluated for the 60*g* side drop. Since the side drop acceleration load does not vary in magnitude over the length of the basket assembly, the most heavily loaded W21 spacer plates are those which support the largest tributary weight. The spacer plate in-plane tributary weights are defined as the portion of the SNF assembly (and fuel spacer, if required), guide tube, support rod, and support sleeve weights that are supported by each spacer plate in the transverse direction, combined with the spacer plate self-weight.

The maximum tributary weights of the Type A stainless steel and Type B carbon steel spacer plates are 2,106 pounds and 1,587 pounds, respectively. Therefore, the most highly loaded W21 stainless steel and carbon steel spacer plates support total loads for the 60*g* side drop of 126.4 kips and 95.2 kips, respectively.

A total of four side drop impact orientations are analyzed for both spacer plates, including 0°, 15°, 30°, and 45°, as shown in Figure 3.7-5. Since the spacer plate is symmetric with respect to the horizontal and vertical centerlines, these impact orientations encompass all of the orientations expected to cause the most severe spacer plate stresses. The spacer plate loading from the support rod assemblies, guide tube assemblies, and fuel assemblies are determined for each impact orientation.

For each side drop orientation, a linear-elastic static analysis is performed. The primary stress intensities in the spacer plates are evaluated as discussed in Section 3.9.2.3. The maximum primary membrane (P_m) and primary membrane plus bending (P_m+P_b) stress intensities in the most highly loaded W21 carbon steel stainless steel spacer plates are summarized in Table 3.7-8 for each side drop orientation.

The stress results show that the highest carbon steel spacer plate primary membrane and primary membrane plus bending stress intensities due to the HAC side drop load result from the 0° and 15° impact orientations, respectively. The maximum primary membrane and primary membrane plus bending stress intensities are 23.3 ksi and 75.2 ksi, respectively. The Service Level D allowable primary membrane and primary membrane plus bending stress intensities for the carbon steel spacer plate material at 700°F are 75.4 ksi and 113.1 ksi, respectively. Therefore, the maximum primary membrane and membrane plus bending stress intensities in the most highly loaded W21 carbon steel spacer plate due to bounding 60*g* side drop loading are less than the corresponding Service Level D allowable stress intensities.

The maximum primary membrane (P_m) and primary membrane plus bending (P_m+P_b) stress intensities in the most highly loaded W21 stainless steel spacer plate are summarized in Table 3.7-8. The stress results show that the highest spacer plate primary membrane and primary membrane plus bending stress intensities due to the HAC side drop load result from the 30° impact orientation. The maximum primary membrane and primary membrane plus bending stress intensities are 12.4 ksi and 45.8 ksi, respectively. The Service Level D allowable primary membrane and primary membrane plus bending stress intensities for SA-240, Type XM-19 stainless steel at 700°F are 60.6 ksi and 90.8 ksi, respectively. Therefore, the maximum primary membrane and membrane plus bending stress intensities in the most highly loaded W21 stainless steel spacer plate due to the bounding 60*g* side drop loading are less than the corresponding Service Level D allowable stress intensities.

Plastic Stress Analysis - Concentrated Fuel Loading at Fuel Grid Spacers

In addition to the uniform fuel load case, the loads from the SNF assemblies are conservatively applied to the supporting basket assembly structure as concentrated loads at the fuel grid spacer locations. Since the W21 canisters are designed for a range of fuel types, the total SNF assembly weight tributary to each grid spacer and the location of the grid spacers relative to the basket assembly spacer plates can vary. The worst case loading for each W21 spacer plate results from the SNF fuel with the highest grid spacer tributary weight for the fuel assembly grid spacer located directly over that spacer plate. The maximum spacer plate stresses under these assumed loading conditions occur in the W21M-SD or W21T-SL basket assemblies loaded with WE 15x15 fuel with control components. The highest spacer plate stresses occur in the spacer plates in the basket mid-region since these plates have the largest tributary length and therefore support the largest load. Therefore, bounding side drop plastic stress analyses are performed for the W21 carbon steel and stainless steel spacer plates in the W21M-SD and W21T-SL basket mid-regions.

The W21 spacer plates are evaluated for the bounding 60*g* transfer cask side drop load using plastic system analysis. The purpose of this plastic analysis is to determine the maximum permanent deformation of the W21 spacer plates due to the transfer cask side drop loading. For

this analysis, as with the uniform loading condition, impact orientations of 0° and 45° are considered.

The W21 spacer plates plastic stress analyses for the transfer cask side drop condition are performed using the full multi-span plane-stress finite element model described in Section 3.9.3.3.4. The finite element model includes three spacer plates: the center spacer plate over which the fuel grid spacers are assumed to be positioned, and the adjacent spacer plates on either side. For the evaluation of the W21 carbon steel spacer plates, all spacer plates are assumed to be ¾-inch thick carbon steel plates. For the evaluation of the W21 stainless steel plates, the center spacer plate is modeled as a 2.00-inch thick stainless steel plate and the adjacent plates are modeled as ¾-inch thick carbon steel plates. For both models, the W21 guide tubes extend 2.50 inches beyond the centerlines of the outer spacer plates on each side.

The finite element model loads for the 60*g* side drop conditions are calculated and applied as described in Section 3.9.3.3.4. The model loading includes the self-weight of the W21 spacer plates and guide tubes, the weight of the support rods and support sleeves tributary to each spacer plate, and the fuel assembly weights. The self-weight of the spacer plates and guide tubes are included in the model and accounted for by applying in-plane accelerations to the model in the direction of impact. The support rod and sleeve tributary weights are applied as concentrated loads on each spacer plate. The fuel weight is applied as a concentrated load to the guide tube directly above the center spacer plate in the model, as discussed above. W21 spacer plate 60*g* side drop plastic analysis, the model loads are ramped up to 60*g* and then reduced to 1*g* in order to determine the spacer plate permanent deformations.

The results of the W21 carbon steel and stainless steel spacer plate 60*g* side drop plastic analyses are summarized in Table 3.7-9. The analyses shows that the plastic strain in the most highly loaded W21 carbon steel and stainless steel spacer plate for the bounding 60*g* side drop load is small and occurs only in localized regions.

The maximum equivalent plastic strain in the most highly loaded W21 carbon steel spacer plate is 0.7% and occurs for the 0° impact orientation, The minimum elongation of SA-517, Grade P carbon steel is 16%. Therefore, the plastic strain in the W21 carbon steel spacer plates is much less than that corresponding to ultimate tensile failure. The maximum permanent deformation in the W21 carbon steel spacer plate results from the 45° impact orientation and is calculated to be 0.03 inches.

The maximum equivalent plastic strain in the most highly loaded W21 stainless steel spacer plate from the bounding 60*g* side drop load is 1.0% and occurs for the 45° impact orientation. The minimum elongation of SA-240, Type XM-19 stainless steel is 35%. Thus, the plastic strain in the W21 stainless steel spacer plates is much less than that corresponding to ultimate tensile failure. The maximum permanent deformation in the W21 stainless steel spacer plate also occurs for the 45° impact orientation and is calculated to be 0.049 inches.

Spacer Plate Buckling

The buckling evaluation of the spacer plates for the postulated transfer cask side drop condition considers both beam-column buckling in accordance with NUREG/CR-6322 and general plastic instability in accordance with Appendix F of the ASME Code.

For the beam-buckling condition, the W21 spacer plates are evaluated for buckling due to the postulated transfer cask side drop condition using the criteria of NUREG/CR-6322 for linear type supports subjected to combined axial compression and bending. Buckling evaluations are performed for the most highly loaded ligaments in both the W21 carbon steel and stainless steel spacer plates for the bounding 60*g* side drop loading, both with and without the bounding normal thermal loads superimposed.

The maximum stresses in the W21 spacer plates due to the postulated transfer cask side drop are evaluated using interaction equations (26), (27), and (28) of NUREG/CR-6322, as defined in Section 3.7.4.2.1. The allowable stresses are calculated for each of the W21 spacer plate ligament types and summarized in Table 3.7-6.

As discussed previously, the spacer plate stresses used for the NUREG/CR-6322 buckling evaluation are calculated on an linear-elastic basis using the W21 spacer plate plane stress finite element model described in Section 3.9.3.3.1. The spacer plate stresses are determined for the bounding 60*g* side drop load, both with and without thermal loading superimposed. The 60*g* side drop loads for the spacer plates are calculated and applied to the finite element models as described in Section 3.9.3.3.1. The thermal gradient which is applied to the model is based on the temperature distribution in the hottest W21 carbon steel spacer plate for normal cold storage conditions. The bounding design thermal gradient discussed in Section 3.7.4.2.1 is conservatively used for this analysis.

The maximum axial compressive stress and bending stress in the W21 carbon steel and stainless steel spacer plate ligaments for the 60*g* side drop loading, both with and without the bounding normal thermal loading superimposed, are summarized in Table 3.7-10 along with the resulting interaction ratios. The results of the analysis show that the highest interaction ratios resulting from the bounding 60*g* side drop load are 0.49 for the W21 carbon steel spacer plate and 0.94 for the W21 stainless steel spacer plate. Therefore, the stresses in the most highly loaded W21 spacer plates satisfy the buckling criteria of NUREG/CR-6322 for the bounding 60g side drop load.

In addition to the elastic beam-column buckling analysis, general plastic instability of the W21 spacer plates is evaluated for the bounding 60*g* transfer cask side drop load, both with and without thermal loading, using plastic large deflection analyses. General instability of the W21 spacer plates occurs when the spacer plate experiences a global longitudinal plate buckling mode. Since the longitudinal bending stiffness of the W21 carbon steel spacer plates is proportional to the plate thickness squared, the bending stiffness of the 2.00-inch thick W21 stainless steel spacer plates is much greater than that of the ¾-inch thick W21 carbon steel spacer plates. In addition, the results of the W21 spacer plate elastic stress analysis for the side drop load show that the spacer plate stress levels relative to the material yield strengths are comparable. Therefore, general instability will be controlled by the carbon steel spacer plates and the stainless steel spacer plates need not be evaluated.

The W21 carbon steel spacer plate plastic large deflection buckling analysis for the transfer cask side drop condition is performed using the full 3-D finite element model described in Section 3.9.3.3.5. The finite element model includes three ¾-inch thick carbon steel spacer plates: the center spacer plate, over which the fuel grid spacers are assumed to be positioned, and the adjacent spacer plates on either side. The spacer plates are modeled using plastic shell elements which have both membrane and bending stiffness. The spacer plates are supported

longitudinally at the locations of the support rods. In addition, the bending support provided by the support rods is modeled using spring elements. A lower bound support rod bending stiffness is conservatively used for this evaluation.

For this analysis, the loads from the SNF assemblies are conservatively applied to the supporting basket assembly structure as concentrated loads at the fuel grid spacer locations. As discussed in Section 3.9.1, the controlling W21 basket configuration for the concentrated fuel loading assumption is the W21M-SD or W21T-SL basket assemblies loaded with WE 15x15 fuel with control components. In addition to the fuel weight, the spacer plates are loaded by their self-weight plus the weight of the support rod assemblies and guide tube assemblies. The W21 spacer plate loads are calculated and applied to the finite element model as described in Section 3.9.3.3.5. In addition to the 60*g* side drop in-plane loading, a constant 10*g* longitudinal acceleration load is applied to the finite element model to introduce an initial eccentricity to the spacer plates.

The bi-linear kinematic hardening material model with a 0.1% tangent modulus is conservatively used for the spacer plate and guide tube materials. For the side drop loads without thermal, the material properties at 700°F are assumed. For the combined side drop plus thermal loading, temperature dependent material properties are used for the spacer plates and guide tubes. The thermal gradient which is applied to the model is based on the temperature distribution in the hottest W21 carbon steel spacer plate for normal cold storage conditions

For the W21 spacer plate side drop plastic large deflection buckling analysis, all in-plane loads are ramped up to two times the side drop load (i.e., 120*g*). Spacer plate plastic instability is indicated by numerical instability in the finite element solution (i.e., unconverged solution). The results show that the most highly loaded W21 carbon steel spacer plate fails due to plastic instability at a load factor of greater than 1.5 (90*g*) for the side drop loading, both with and without thermal loading superimposed. The spacer plate deflections are slightly higher for the case which includes thermal loading than for side drop loading alone.

3.7.5.2.2 Support Rods and Support Sleeves

The support rod is evaluated using simple beam theory. Two sections of the rod are considered: the cantilever section at the top and bottom end and the longest span between any two adjacent 2-inch thick stainless steel spacer plates. Conservatively, no credit is taken for the support provided to the support rods by the carbon steel spacers because of the small gap that exists between the rods and the spacer holes. The longest center-to-center span between the stainless spacers is 48.7 inches (W21M-LD) and the cantilever is conservatively taken as 9 inches. Since the spacer rod segments are tightened to 150 ft-lbs and also due to a symmetry condition existing during a side drop, both ends of the support rod span are considered as fixed. The bounding side drop acceleration of 60g is considered for the evaluation of support rods for the side drop condition.

The shear force and bending moment at the ends of the cantilever and the fixed end span are calculated using classical beam formulas. The bounding lengths are taken for both reactions. The maximum shear and bending stresses occur at the ends of each support rod segment in the male and female sections of the connections, since the section properties at these locations are much lower than those of the solid rod. The male section consists of the solid threaded rod (minor diameter of the 2-12 UN external thread) while the female section consists of the hollow circle

(major diameter of 2-12 UN internal thread). The maximum shear force and bending moment in the longest support rod span for the 60*g* side drop loading are 3.92 kips and 31.78 in-kips, respectively. The resulting maximum shear and bending stresses at the ends of the support rod are 1.38 ksi and 47.36 ksi, respectively.

The shear and bending stresses are used to determine the primary membrane and primary membrane plus bending stress intensities in the support rod sections, as follows:

$$P_m = 2\tau \qquad P_m + P_b = 2\sqrt{\left(\frac{\sigma_b}{2}\right)^2 + \tau^2}$$

The maximum primary membrane and primary membrane plus bending stress intensities, occurring in the longest span of the support rod at the male end connector, are 2.8 ksi and 47.4 ksi, respectively. The results show that the maximum stresses in the W21 support rods due to the 60*g* side drop load are less than the corresponding Service Level D allowable stresses.

The bending moment at the support rod end connections is reacted by shear on the support rod threads. The thread shear is assumed to vary linearly across the diameter of the support rod. The maximum thread shear load per unit length of circumference is calculated as follows:

$$V_{max} = \frac{M}{\left(\pi d^2 / 4\right)} = 11.23 \text{kips/in}$$

where:

M = 31.78 in-kips, moment resisted at the connection

d = 1.898 inch, minor diameter of 2-12 UN-2A thread

The thread shear stress is calculated as follows:

$$\tau = \frac{V_{max}(\pi d)}{A_e L} = 11.07 \text{ksi}$$

where:

A_e = 3.456 in^2, the external thread shear area per unit length per Boucher[28]

L = 1.75 inches, minimum length of thread engagement

The maximum primary membrane stress intensity in the support rod threads is equal to twice the shear stress, or 22.14 ksi. The Service Level D allowable primary membrane stress intensity, conservatively based on the weaker SA-479, Type XM-19 stainless steel support rod material at 600°F, is 61.5 ksi. Therefore, the W21 support rod threads are structurally adequate for the bounding 60*g* side drop load.

[28] Boucher, R. C., *Strength of Threads*, Product Engineering, November 27, 1961.

Lateral loads do not produce any stresses in the support sleeves because the sleeves are supported along the entire length by the support rods. The support rod analysis above includes loads due to the weight of the support sleeves.

3.7.5.2.3 Guide Tubes

When subjected to the transfer cask side drop loading, each guide tube assembly is supported by the basket spacer plates and loaded by its own weight in addition to the weight of a single SNF assembly. Each SNF assembly loads the supporting guide tube panel which, in turn, carries to load to the supporting spacer plate ligaments. The side drop structural evaluation of the W21 guide tubes considers two bounding conditions for the fuel loading on the guide tube: (1) Linear elastic and plastic analyses are performed using a uniform fuel load assumption, and (2) A plastic analysis is performed assuming the fuel loads on the guide tube are concentrated at the SNF assembly grid spacers. The W21 guide tubes are conservatively evaluated for a bounding 60*g* side drop acceleration load. The results of the side drop analysis for the guide tubes are summarized in Table 3.7-5.

Uniform Fuel Loading - Elastic Stress Analysis

Since the guide tube side drop loading for the uniform fuel load assumption is uniform over its entire length, the largest unsupported guide tube spans in each W21 canister basket are the most highly loaded. Calculations are performed for the largest guide tube free spans of each W21 canister using the maximum SNF assembly line loads from Section 3.9.1 for each design. The results of the hand calculations show that the maximum bending stress occurs in the W21M-SD/W21T-SL guide tubes for the WE 15x15 fuel with control components. Therefore, a detailed finite element analysis of this guide tube assembly is performed for the 60*g* side drop.

The stresses in the governing span of the most highly loaded W21 guide tube due to the 60*g* side drop load are evaluated using finite element methods. The guide tube 60*g* side drop elastic stress analysis is performed using the half-symmetry periodic finite element model described in Section 3.9.3.4.1. The W21 guide tube neutron absorber sheets and stainless steel wrapper are not included in the finite element model, conservatively neglecting the support they provide to the guide tube. However, their mass is included in the model. The load from the heaviest SNF assembly (WE 15x15 with control components) is applied as a uniform pressure load on the supporting guide tube panel. The uniform pressure load due the fuel weight, calculated as described in Section 3.9.3.4.1, is 65.2 psi. The guide tube stresses are determined using a linear elastic static analysis. The maximum membrane and membrane plus bending stress intensities in the W21 guide tube due to the 60*g* side drop load are 13.6 ksi and 54.0 ksi, respectively. These stress intensities are conservatively classified as primary. The Service Level D allowable primary membrane and primary membrane plus bending stress intensities for SA-240, Type 316 stainless steel at an upper bound design temperature of 700°F are 39.1 ksi and 58.7 ksi, respectively. Therefore, the guide tube bending stresses are within the Service level D allowable limits.

The stresses in the W21 guide tube longitudinal seam weld at ¼ panel width due to the bounding 60*g* side drop load are also evaluated using the maximum nodal moment reactions from the finite element solution. The results show that the maximum primary membrane and primary membrane plus bending stress intensities in the W21 guide tube longitudinal seam weld due to the 60*g* side drop loading are 4.1 ksi and 23.6 ksi, respectively. In accordance with Table NG-3352-1 of the

ASME Code, the efficiency factor for a full-penetration weld with surface PT examination is 0.65. However, a conservative 60% weld efficiency factor is applied to the allowable stresses for a full penetration weld with surface PT examination. Therefore, the W21 guide tube seam weld Service Level D allowable primary membrane and primary membrane plus bending stress intensities are 23.5 ksi (39.1 x 0.6) and 35.2 ksi (58.7 x 0.6), respectively. Therefore, the W21 guide tube stresses resulting from the bounding 60*g* side drop load are lower than the corresponding Service Level D allowable stresses.

Uniform Fuel Loading - Plastic Stress Analysis

In addition to the linear-elastic stress analysis discussed above, the W21 guide tubes are evaluated for the bounding 60*g* side drop load on a plastic basis assuming a uniform fuel load distribution to determine the maximum guide tube permanent deformation. The finite element model used for the guide tube plastic analysis has the same geometry, loading, and boundary conditions as that used for the linear-elastic stress analysis. The plastic material properties of Type 316 stainless steel at a bounding temperature of 700°F from Table 3.3-4 are used for the guide tube plastic analysis. The guide tube permanent deformation is determined by applying the loads corresponding to the 60*g* transverse load and subsequently removing the loads. The maximum permanent deformation at the center of the guide tube panel that supports the load from the SNF assembly is 0.079 inch. The maximum equivalent plastic strain in the guide tube is 0.8%, which is less than the 40% minimum elongation of SA-240, Type 316 stainless steel.

Guide Tube Buckling

Buckling of the W21 guide tube is evaluated for the transfer cask side drop using the criteria of NUREG/CR-6322 for linear-type members subjected to combined axial compressive and bending loads. The axial compressive stress and bending stress in the side panels of the W21 guide tube are determined using classical solutions. The side panel is evaluated as a fixed-fixed span, assuming half of the panel weight is applied at the end (top panel contribution) and the self-weight of the side panel is distributed along its length. As a result, the axial compression is not constant but varies along the side panel length. Since the theoretical buckling stress for linearly varying axial compressive stress in a column is higher than that of a column subjected to a uniform axial compressive stress on which the NUREG/CR-6322 acceptance criteria are based, an equivalent value of axial stress is calculated for use in the interaction equations.

The maximum bending stress in the guide tube side panel due to moment reactions from the top and bottom panels is calculated based on the maximum guide tube bending stress in the top and bottom panel due to the 60g side drop load. Since buckling is a global effect, the bending stress is averaged over the span between the spacer plates.

The allowable axial and bending stresses for the guide tube are calculated in accordance with NUREG/CR-6322 for linear members subjected to combined axial compressive and bending loads. Since the ratio of f_a / F_a is less than 0.15, equation (28) of NUREG/CR-6322 may be used. The allowable bending stress per NUREG/CR-6322 is $F_b = fS_y$ or 27.2 ksi, where f =1.5 is the plastic shape factor for rectangular cross-section. Therefore, the interaction ratio for equation (28) of NUREG/CR-6322 is calculated as follows:

$$\frac{f_a}{F_a} + \frac{f_b}{F_b} = \frac{0.242}{1.76} + \frac{9.2}{27.2} = 0.48<1$$

No thermal stresses exist in the W21 guide tube because sufficient clearances are provided. Therefore, the W21 guide tube is adequate to withstand the 60*g* side drop without buckling.

Neutron Absorber Panel Stresses

The maximum bearing stress in the neutron absorber panel occurs at the carbon steel spacer plate because its tributary load is close to that of the stainless spacer, albeit the thickness is much lower. The bearing stress is calculated to be 549 psi. Although evaluation of bearing stress is not required per the ASME Code for accident conditions, the bearing stress in the neutron absorber panel is considered to assure that no local damage results from the side drop. The ultimate strength of the neutron absorber panel material at room temperature is 10 ksi. Therefore, recognizing that the ultimate strength of the neutron absorber material will be somewhat lower at the guide tube design temperature, the bearing stress level in the neutron absorber sheets due to the 60*g* side drop load is not sufficient to cause any damage to the neutron absorber panels.

Concentrated Loading at Fuel Grid Spacers

The W21 guide tubes are evaluated for the 60*g* side drop load assuming the fuel assembly loads are applied to the guide tube as concentrated loads at the fuel grid spacer locations. The purpose of this evaluation is to determine the maximum guide tube permanent displacements which could result from the postulated side drop condition.

The 60*g* side drop evaluation of the W21 guide tube with a concentrated load at the fuel grid spacer is performed using the ½-symmetry multi-span finite element model described in Section 3.9.3. As discussed in Section 3.1.1.2, the highest grid spacer tributary weight of 256.9 pounds, which occurs on the W21M-SD/W21T-SL guide tubes loaded by WE 15x15 fuel with control components. These basket assemblies have a maximum spacer plate center-to-center spacing of 5.00 inches. The only other W21 basket assemblies which have larger spacer plate center-to-center spacing (5.35 inches) are the W21M-LD and W21T-LL. Since the maximum SNF assembly grid spacer tributary load for these designs is considerably lower than that of the W21M-SD or W21T-SL basket assemblies (56%), the stresses in the W21M-SD or W21T-SL basket assembly guide tubes will bound all others. Therefore, a bounding side drop analysis is performed based on the W21M-SD/W21T-SL guide tubes loaded by WE 15x15 fuel with control components.

The fuel load is applied to the model at the mid-span of the largest guide tube span (i.e., midway between spacer plate supports) since this will result in the largest guide tube deformations for a given load. The applied loads are illustrated in Figure 3.7-6 and include: (1) a *60g* side drop acceleration applied to account for the guide tube self-weight, (2) a displacement imposed on the guide tube bottom panel nodes in the region of the grid spacer, and (3) a uniform pressure load applied to those spans which do not have the imposed displacement loading to account for the balance of the fuel weight not accounted for by the imposed displacement.

The magnitude of the imposed displacement is chosen based upon the maximum protrusion of the grid spacer beyond the fuel rod envelope (i.e., distance from edge of grid spacer to outermost fuel rod), recognizing that the displacement of the guide tube is limited by this fuel parameter. The maximum grid spacer protrusion has been calculated for each PWR fuel class. The results show that the maximum grid spacer protrusion is 0.081 inches for Haddam Neck fuel (which is not being qualified for storage, but nonetheless provides the maximum grid strap protrusion). For

conservatism, a bounding 0.10-inch displacement is imposed onto the guide tube bottom panel in the area of the grid spacer support.

The analysis results show that the maximum stress intensity and maximum equivalent plastic strain at the middle fiber of the guide tube shell elements are 15.7 ksi and 4.4%, respectively. The maximum stress intensity and equivalent plastic strain at the extreme fibers (i.e., top and bottom) of the guide tube shell elements are 39.0 ksi and 13.9%, respectively. The Service Level D plastic analysis allowable primary membrane and primary membrane plus bending stress intensities for SA-240, Type 316 stainless steel at 700°F are 50.3 ksi and 64.6 ksi, respectively. Therefore, for the 60*g* side drop evaluation of the W21 guide tubes, the Service Level D allowable limits are satisfied for the concentrated load condition. As shown in Figure 3.7-7, the plastic strain in the guide tube occurs only in the span which supports the fuel grid spacer and is limited to a small region near the edge of the grid spacer footprint. The minimum elongation of Type 316 stainless steel is 40%. The permanent deformation in the guide tube resulting from the 60*g* side drop with the concentrated fuel load at the grid spacers is shown in Figure 3.7-8. The maximum permanent deformation of the guide tube, occurring at the location of the concentrated grid spacer loading, is 0.09 inches. The permanent deformation of the guide tube is considered in the W21 canister criticality evaluation.

3.7.6 Fire

The FuelSolutions™ W21 canister in the storage cask is evaluated for a postulated accidental fire event defined in Section 2.3.3.4 of the FuelSolutions™ Storage System FSAR. The storage cask evaluation for this postulated fire accident is discussed in Section 11.2.5 of the FuelSolutions™ Storage System FSAR.

As documented in Section 4.6, the maximum canister pressure as a result of the postulated fire accident is bounded by the design basis accident pressure of 69.0 psig. Further, the external heating acts to reduce the thermal gradients on the canister, resulting in lower thermal gradients and therefore lower stresses than for the normal ambient conditions. Therefore, the structural effects of this postulated accident on the canister are bounded by the accident pressure condition evaluated in Section 3.7.9 and the bounding thermal gradients evaluated in Section 3.5.1.3.

3.7.7 Flood

The FuelSolutions™ W21 canister is evaluated for the effects of an enveloping design basis flood, postulated to result from natural phenomena such as a tsunami and seiches, as specified by 10 CFR 72.122(b). For the purpose of this evaluation, a 50-foot flood height is used as defined in Section 2.3.4.1. The W21 canister is protected from the lateral forces due to the flood current by the storage cask. The only flood load affecting the canister is the 21.7 psi hydrostatic pressure due to the 50-foot flood head.

The effects of the flood hydrostatic pressure on the W21 canister are much less severe than those of the design basis 69 psig accident internal pressure load evaluated in Section 3.7.9. This is due to the relative magnitude of the flood pressure load compared with that of the design basis accident internal pressure and the nature of the pressure loads. Internal pressure loading produces higher stresses in the end regions of the shell assembly than does external pressure loading, since the canister closure plates are supported by the shield plugs under external

pressure loading only. Therefore, the canister shell stresses due to flood loading are bounded by those due to accident internal pressure.

Shell buckling due to an external pressure of 21.7 psi is governed by hoop compression. The hoop stress due to an external pressure of 21.7 psi is 1.14 ksi. Using Paragraph -1712 of ASME Code Case N-284, the theoretical hoop buckling stress is 10.64 ksi, based on nominal shell dimensions and material properties at a bounding temperature of 600°F. Applying a factor of safety of 2.0 and a capacity reduction factor of 0.8 in accordance with Paragraphs -1400 and -1511 of ASME Code Case N-284, respectively, the allowable hoop buckling stress is 4.26 ksi. Using the interaction equations of Paragraph -1713.1.1 of ASME Code Case N-284, the maximum interaction equation due to an external pressure of 21.7 psi is:

$$1.14/4.26 = 0.27 < 1.0$$

Therefore, the canister shell does not buckle due to the 50-foot head external flood pressure.

3.7.8 Earthquake

As discussed in the FuelSolutions™ Storage System FSAR, the design basis seismic accelerations for the FuelSolutions™ storage system are 0.25*g* horizontally (in each of two orthogonal directions, or a 0.35*g* resultant horizontal acceleration) and 0.25*g* vertically. Since the lowest fundamental frequency of the W21 canister is much greater than 33 Hz, no amplification of the seismic loading occurs within the W21 canister assembly. Bounding seismic accelerations of 1.1*g* along the canister longitudinal axis and 1.3*g* transverse to the canister longitudinal axis are conservatively used for the structural evaluation of the W21 canister basket assembly.

3.7.8.1 Canister Shell Assembly

The canister shell assembly stresses due to the design basis seismic loads are considered to be bounded by those due to the postulated cask drop conditions. This is due to the relative magnitudes of the seismic and drop loads (i.e., 0.25*g* versus a 50*g* end drop and 0.35*g* 60*g* side drop). Therefore, the canister shell stresses are not calculated for the seismic load condition.

3.7.8.2 Canister Basket Assembly

A bounding seismic evaluation of the basket assembly components is performed using a 1.3*g* transverse acceleration combined with a 1.1*g* longitudinal acceleration. The W21 basket assembly component stresses due to the transverse seismic acceleration are calculated by scaling the maximum stresses due to the horizontal dead weight load by 1.3. Similarly, the stresses due to the longitudinal seismic acceleration are determined by scaling the maximum stresses due to the vertical dead weight load by 1.1. The resulting stresses due to transverse and longitudinal seismic loads are added together, irrespective of location, to arrive at the total seismic stresses shown in Table 3.7-5. The results show that the maximum W21 basket assembly component stresses due to the bounding seismic load are much lower than the stresses due to the accident drop conditions. The W21 basket assembly stresses due to seismic loading are combined with other normal, off-normal, and accident condition stresses in the load combination evaluation presented in Section 3.7.10.2.

3.7.9 Accident Internal Pressure

As discussed in Section 4.6.1.4, the maximum internal pressure in the FuelSolutions™ W21 canister for all accident thermal conditions is 68.7 psig, based on the required backfill quantity of helium in accordance with the *technical specification* contained in Section 12.3 of this FSAR, and a concurrent non-mechanistic failure of 100% of the fuel rods with complete release of their fill gas and 30% of their fission gasses into the canister cavity. All gas is assumed to be at the extreme off-normal condition canister cavity gas temperature. For all W21 canisters with the exception of the W21T-LL, a bounding accident internal pressure of 69.0 psig is conservatively used for the structural evaluation. The maximum accident pressure for the W21T-LL canister is 45.0 psig. The W21T-LL canister shell stresses are calculated based on a bounding 45.1 psig accident internal pressure.

The structural evaluation of these two W21 canister shell assemblies for the accident internal pressure condition is performed using the axisymmetric finite element models described in Section 3.9.3.1 of this FSAR. The analysis methodology, including the methodology for application of the pressure loads and calculation of stresses, is described in Section 3.5.2.2 of this FSAR. The resulting bounding W21 canister shell stresses due to these accident internal pressures applied to the canister pressure boundary, including the top inner and outer closure plates, are provided in Table 3.7-4. All canister shell stresses due to accident internal pressure are within the allowable values.

3.7.10 Accident Condition Load Combinations

Load combinations are performed for the FuelSolutions™ W21 canister in accordance with Section 2.3 for accident conditions. The load combinations include normal loads evaluated in Section 3.5, off-normal loads evaluated in Section 3.6, and accident loads evaluated in this FSAR section. Load combinations are summarized in Table 2.3-1. The structural evaluation of the W21 canister shell assembly and basket assembly for accident load combinations are presented in the following sections.

3.7.10.1 Canister Shell Assembly

The W21 canister accident load combinations defined in Table 2.3-1 are simplified by identifying the bounding load combinations. Since load combination D8 is bounded by load combinations D1 and D2, load combination D8 need not be evaluated. For Service Level D conditions, general thermal stresses are classified as secondary and consequently need not be considered. Therefore, load combination D7 reduces to vertical dead weight plus off-normal internal pressure, which is identical to load combination C1 evaluated in Section 3.6.6.1. Since the allowable stresses for Service Level D conditions are greater than those for Service Level C conditions, load combination D7 need not be evaluated. In addition, load combination D6 includes seismic loads, which are insignificant when compared to the postulated cask drop and tip-over loads. Therefore, load combination D6 is also insignificant in comparison to those load combinations which include the postulated cask drop and tip-over loads. Consequently load combination D6 is not evaluated for the W21 canister shell assembly. The W21 canister shell load combination evaluations for the remaining accident load combinations (i.e., D1 through D5) are performed as described below.

The canister shell assembly stressed due to load combinations D1 through D5 are evaluated using the axisymmetric and three-dimensional finite element models described in Sections 3.9.3.1 and 3.9.3.2, respectively. Load combination evaluations are performed for both the "bounding" canister shell model, which bounds all W21 canister shell assemblies with the exception of the W21T-LL, and the W21T-LL canister shell assembly. Separate evaluations are performed for internal pressure acting on both the top inner and outer closures. Thermal loads are not considered since thermal stresses are classified as secondary, and as such need not be evaluated for Service Level D conditions.

For load combination D1, vertical dead weight, vertical transfer, and accident internal pressure loads are applied simultaneously to the canister shell axisymmetric finite element models. For this condition, the canister shell is supported vertically at the location of the vertical transfer pintle plate bolt circle on top outer closure plate. The evaluation for load combination D3 is performed in a similar manner to load combination D1, but includes the storage cask end drop and off-normal internal pressure loads. For load combination D3, the canister shell is supported at the bottom end. For load combination D2, both the axisymmetric and three-dimensional finite element models are used. The axisymmetric model is used to determine the canister shell stresses due to normal horizontal canister transfer and accident internal pressure loads. The canister shell stresses due to horizontal dead weight, which are calculated using the three-dimensional half-symmetry finite element model described in Section 3.9.3.2, are conservatively added absolutely to the maximum stresses calculated with the axisymmetric model. Load combinations D4 and D5 are evaluated using only the three-dimensional finite element model. The load combination D4 (side drop plus off-normal internal pressure) evaluation is performed in the same manner as the side drop stress evaluation described in Section 3.7.5.1, but includes the off-normal internal pressure load on the inside of the canister shell. Similarly, the load combination D5 (tip-over plus off-normal internal pressure) evaluation is performed in the same manner as the tip-over stress evaluation described in Section 3.7.4.1, but includes the off-normal internal pressure load on the inside of the canister shell.

The maximum stresses in the W21 canister shell due to load combinations D1 through D5 are summarized in Table 3.7-11 through Table 3.7-15, respectively. The results show that the maximum stresses in the W21 canister shell for all accident load combinations are lower than the corresponding Service Level D allowable stresses.

3.7.10.2 Canister Basket Assembly

The accident load combinations for the W21 canister include dead weight; normal handling; off-normal and accident internal pressure; normal and accident thermal loads; seismic; and postulated cask drop loads. In addition to the normal, off-normal, and accident load conditions evaluated in the previous sections, the effects of the support rod torque which is applied during fabrication of the basket assembly is also included in the load combinations. As shown in Section 3.9.4, the maximum shear stress in the support rod segment threads due to the torque preload is 1.8 ksi. Since the basket assembly is not a pressure retaining component, it is not subjected to internal pressure loading. In addition, stresses due to thermal loading are classified as secondary stresses, which need not be evaluated for Service Level D conditions. However, thermal loads are considered in combination with drop loads for the basket assembly buckling analyses where the combined loads result in lower factors of safety against buckling.

With the elimination of internal pressure and thermal loads, the accident load combinations for the basket assembly are reduced as follows. Load combinations D1 and D2 reduce to dead weight plus normal handling, and are bounded by load combination A4 evaluated in Section 3.5.5.2. Load combinations D3 and D5 consist of postulated cask drop and tip-over loads only, which are evaluated in the previous sections of this Chapter. Load combination D6 reduces to dead weight plus seismic. For load combination D6, the basket assembly stresses are conservatively determined by adding the bounding dead weight stresses to the maximum seismic stresses, irrespective of sign and location. Load combination D7 reduces to horizontal dead weight only and is bounded by load combination A3. The W21 canister basket assembly stresses for accident load combinations D3 through D6 are reported in Table 3.7-16. The results show that all stresses are lower than the corresponding Service Level D allowable stresses.

Table 3.7-1 - W21 Spacer Plate End Drop Reaction Loads for Support Rod Assembly Evaluation

Load Conditions and Spacer Plate Reactions[1]		Spacer Plate Reaction Loads			
		On Rod Segment		On Support Sleeve	
		Lower Bound[2]	Fixed[2]	Lower Bound[2]	Fixed[2]
20*g* End Drop	CS Spacer Pl. Axial Load (lbs)	N/A	N/A	750	750
	CS Spacer Pl. Moment (in-lbs)	N/A	N/A	2,020	2,060
	SS Spacer Pl. Axial Load (lbs)	2,240	2,040	N/A	N/A
	SS Spacer Pl. Moment (in- lbs)	4,140	5,620	N/A	N/A
	Bottom SS Spacer Pl. Axial Load (lbs)	17,220	14,830	N/A	N/A
	Bottom SS Spacer Pl. Moment (in-lbs)	55,320	78,730	N/A	N/A
50*g* End Drop	CS Spacer Pl. Axial Load (lbs)	N/A	N/A	1,880	1,860
	CS Spacer Pl. Moment (in- lbs)	N/A	N/A	5,050	5,140
	SS Spacer Pl. Axial Load (lbs)	5,590	5,090	N/A	N/A
	SS Spacer Pl. Moment (in- lbs)	10,330	14,050	N/A	N/A

Notes:

(1) Spacer plate end drop reactions are scaled from the vertical deadweight reactions.

(2) Two sets of spacer plate reactions are summarized: the first value shown is based on a lower bound support rod/sleeve bending stiffness; the second value is based on fixed conditions at the support rod/sleeve locations.

Table 3.7-2 - W21M-LD Support Rod Allowable Loads and Stresses

Support Rod Segment Number	Unsupported Span Length (in.)	Effective Length Factor, K	KL/r	λ	Allowable Loads and Stresses						
					P (Eq. 33) (lbs)	P (Eq. 43) (lbs)	P (Eq. 45) (lbs)	P (lbs)	F_a (psi)	F'_e (psi)	F_b (psi)
1 (top)	9.00	2.0	24.0	0.29	204,067	147,985	109,139	150,500	21,291	296,924	
2	29.00	1.2	46.4	0.57	173,538	134,031	95,344	123,448	17,464	79,439	
3	32.40	1.2	51.8	0.63	166,592	130,083	91,994	117,813	16,667	63,641	
4	48.70	1.2	77.9	0.95	136,053	108,386	75,933	95,316	13,484	28,169	63,335
5	31.40	1.2	50.2	0.61	168,614	131,266	92,979	119,434	16,896	67,759	
6	27.00	1.2	43.2	0.53	177,719	136,256	97,315	126,928	17,957	91,643	
7 (bot)	2.00	2.0	5.3	0.07	230,379	156,406	120,635	177,690	25,138	6,012,706	

Table 3.7-3 - W21 Support Rod Segment End Drop Results

End Drop Case	Rod Segment Number	Axial Load (lbs.)	Bending Moment (in-lb.)	f_a (psi)	f_b (psi)	f_a/F_a	Interaction Ratios (Eq. Number)		
							(26)	(27)	(28)
20*g* Bottom End Drop									
Lower Bound Support Rod Bending Stiffness[1]	1 (top)	502	0	71	0	0.00	---	---	0.00
	2	5,431	4,140	768	1,562	0.04	---	---	0.07
	3	13,790	4,140	1,951	1,562	0.12	---	---	0.14
	4	22,121	4,140	3,130	1,562	0.23	0.26	0.09	---
	5	32,175	4,140	4,552	1,562	0.27	0.29	0.13	---
	6	39,603	55,320	5,603	20,870	0.31	0.61	0.45	---
	7 (bot)	61,670	55,320	8,725	20,870	0.35	0.63	0.52	---
Fixed Condition at Support Rods [2]	1 (top)	502	0	71	0	0.00	---	---	0.00
	2	5,231	5,620	740	2,120	0.04	---	---	0.08
	3	13,390	5,620	1,894	2,120	0.11	---	---	0.15
	4	21,521	5,620	3,045	2,120	0.23	0.26	0.10	---
	5	31,375	5,620	4,439	2,120	0.26	0.29	0.13	---
	6	38,603	78,730	5,461	29,701	0.30	0.73	0.59	---
	7 (bot)	58,280	78,730	8,245	29,701	0.33	0.73	0.65	---
50*g* Bottom End Drop									
Lower Bound Support Rod Bending Stiffness[1]	1 (top)	1,256	0	178	0	0.01	---	---	0.01
	2	13,578	10,330	1,921	3,897	0.11	---	---	0.17
	3	34,496	10,330	4,880	3,897	0.29	0.35	0.17	---
	4	55,338	10,330	7,829	3,897	0.58	0.65	0.24	---
	5	80,502	10,330	11,389	3,897	0.67	0.74	0.32	---
	6	99,088	10,330	14,018	3,897	0.78	0.84	0.37	---
	7 (bot)	116,825	10,330	16,527	3,897	0.66	0.71	0.43	---
Fixed Condition at Support Rods [2]	1 (top)	1,256	0	178	0	0.01	---	---	0.01
	2	13,038	14,050	1,844	5,300	0.11	---	---	0.19
	3	33,336	14,050	4,716	5,300	0.28	0.36	0.19	---
	4	53,578	14,050	7,580	5,300	0.56	0.66	0.25	---
	5	78,082	14,050	11,046	5,300	0.65	0.74	0.33	---
	6	96,068	14,050	13,591	5,300	0.76	0.84	0.39	---
	7 (bot)	113,185	14,050	16,012	5,300	0.64	0.71	0.44	---

Notes:

(1) Results are calculated using spacer plate reactions based on a lower bound support rod/sleeve bending stiffness.

(2) Results are calculated using spacer plate reactions based on fixed conditions at the support rod/sleeve locations.

Table 3.7-4 - W21 Canister Shell Assembly Accident Condition Stress Summary

Shell Component	Stress Type	Maximum Stresses (ksi)				Allowable Stress[1] (ksi)
		Accident Internal Pressure	Storage Cask End Drop	Storage Cask Tip-over	Transfer Cask Side Drop	
Top Outer Closure Plate	P_m	1.1	0.9	5.4	14.7	46.2
	P_m+P_b[2]	22.3	9.4	9.1	24.3	69.3
Top Outer Closure Weld	P_m	7.4	4.4	7.6	11.4	37.0[3]
	Shear[4]	1.8	0.8	[5]	[5]	22.1[3]
Top Inner Closure Plate	P_m	1.3	1.6	12.4	21.4	46.2
	P_m+P_b	9.2	16.5	26.6	42.9	69.3
Top Inner Closure Weld	P_m	8.7	10.0	34.6	32.4	41.6[5]
	Shear[4]	4.3	5.0	17.3	16.2	24.9[5]
Top Shield Plug Btm. Support Pl. (DU/Pb)	P_m	0.0	1.9	[6]	[6]	46.2
	P_m+P_b	0.3	48.4	[6]	[6]	69.3
Cylindrical Shell	P_m	15.8	11.8	12.4	23.3	46.2
	P_m+P_b	49.9	25.7	31.0	31.0	69.3
Bottom Shell Extension	P_m	6.4	8.0	[7]	[7]	46.2
	P_m+P_b	7.9	29.8	[7]	[7]	69.3
Bottom Closure Plate	P_m	1.7	2.0	[8]	[8]	46.2
	P_m+P_b	29.7	8.8	[8]	[8]	69.3
Bottom End Plate (Except W21T-LL)	P_m	2.3	3.1	[8]	[8]	46.2
	P_m+P_b	23.1	5.1	[8]	[8]	69.3
W21T-LL Bottom End Plate	P_m	4.8	2.2	[8]	[8]	66.1
	P_m+P_b	34.5	11.7	[8]	[8]	99.1
Top Shield Plug Supt. Ring Weld	Shear	0.1	5.3	[6]	[6]	16.2
Shell Extension Top Weld	Shear	2.3	12.4	[7]	[7]	16.2
Shell Extension Bottom Weld	Shear	1.1	13.7	[7]	[7]	16.2

Notes:

(1) Allowable stress intensities are based on the weaker of the W21M and W21T canister shell materials (SA-240, Type 304 stainless steel) properties at 300°F, except for the W21T-LL bottom end plate allowable stresses which are based on SA-240, Type XM-19 stainless steel at 300°F.

(2) The maximum bending stress in the top outer closure plate is determined using hand calculations assuming simply support edge conditions to demonstrate that the bending stress in the top outer closure weld may be classified as secondary.

(3) The allowable stresses for the top outer closure weld include a 0.8 weld efficiency factor in accordance with ISG-4.

(4) Shear stress in the welds is determined using hand calculations.

(5) The allowable stresses for the top inner closure weld include a 0.9 weld efficiency factor in accordance with Section 3.1.2.2 of this FSAR.

(6) Bounded by stresses due to storage cask end drop.

(7) Bounded by stresses in canister shell top end region.

(8) Bounded by stresses in the top inner closure plate.

Table 3.7-5 - W21 Canister Basket Assembly Accident Condition Stress Summary

Basket Component	Stress Type	Maximum Stresses (ksi)				Allowable Stress[1] (ksi)
		Earth-quake	Storage Cask End Drop	Storage Cask Tip-over	Transfer Cask Side Drop	
2-inch Thick Stainless Steel Spacer Plate	P_m	1.0	0.0	9.3	12.4	60.6
	P_m+P_b	2.6	6.1	23.3	45.8	90.8
	Buckling I.R.[3]	N/A	N/A	0.70	0.94	1.0
¾-inch Thick Carbon Steel Spacer Plate	P_m	2.4	0.0	18.4	23.3	75.4
	P_m+P_b	5.9	14.6	46.0	75.2	113.1
	Buckling I.R.[3]	N/A	N/A	0.31	0.49	1.0
2-inch Thick Stainless Steel Bottom End Spacer Plate	P_m	1.0	0.0	[6]	[6]	61.5
	P_m+P_b	3.9	26.3	[6]	[6]	92.2
	Buckling I.R.[3]	N/A	N/A	[6]	[6]	1.0
Support Rod	P_m	0.5	16.5	[7]	2.8	62.4[2]
	P_m+P_b	3.1	37.9	[7]	47.4	93.6[2]
	Buckling I.R.[3]	N/A	0.84	[7]	N/A	1.0[2,3]
W21M Supt. Rod Threads	P_m	0.5	---	[7]	22.1	61.5
W21T Supt. Rod Threads	P_m	0.5	---	[7]	22.1	95.3
Support Sleeve	P_m	[4]	7.3	[4]	[4]	33.6[2]
	P_m+P_b	[4]	9.5	[4]	[4]	50.4[2]
	Buckling I.R.[3]	N/A	0.77	N/A	N/A	1.0[2,3]
Guide Tube	P_m	1.5	14.0	[7]	13.6	39.1
	P_m+P_b	13.5	14.0	[7]	54.0	58.7
	Buckling	N/A[4]	14.0[5]	[7]	0.48[3]	137[5]/1.0[3]
Guide Tube Longitudinal Seam Weld	P_m	[7]	[7]	[7]	4.1	23.5[8]
	P_m+P_b	[7]	[7]	[7]	23.6	35.2[8]

Notes:

(1) Allowable stresses are based on design temperatures presented in Table 3.5-1, unless otherwise noted.

(2) The allowable stresses reported for the W21 support rods and sleeves are based on the smaller of the W21M and W21T allowable stresses.

(3) Buckling interaction ratio (I.R.) in accordance with NUREG/CR-6322.

(4) Bounded by storage cask end drop condition.

(5) The allowable guide tube axial compressive stress for the storage cask end drop condition is 137 ksi, as discussed in Section 3.7.3.2.3.

(6) Bounded by other 2-inch stainless steel spacer plates.

(7) Bounded by transfer cask side drop condition.

(8) Allowable stresses include a 60% weld efficiency factor. This is applicable only to a full penetration weld with surface PT examination only and restricted in location to the ¼ span of panel width.

Table 3.7-6 - W21 Spacer Plate Allowable Buckling Stresses

Spacer Plate Type	Carbon Steel		Stainless Steel	
Ligament Type	A	B	A	B
Width, b (in.)	1.90	1.30	1.90	1.30
Thickness, t (in.)	0.75	0.75	2.00	2.00
Height, L (in.)	9.43	9.43	9.43	9.43
Gross Area, A_g (in^2)	1.43	0.98	3.80	2.60
Ixx (in^4)	0.429	0.137	1.143	0.366
r_x (in.)	0.548	0.375	0.548	0.375
Effective Length Factor, K	0.65	0.65	0.65	0.65
KL/r_x	11.18	16.33	11.18	16.33
S_y @ 700°F (ksi)	83.0	83.0	36.3	36.3
E @ 700°F (ksi)	$25.5x10^3$	$25.5x10^3$	$24.8x10^3$	$24.8x10^3$
Lambda	0.203	0.297	0.136	0.199
P_{33} (kips)	96.3	62.5	116.3	77.0
P_{43} (kips)	N/A	N/A	80.6	54.4
P_{45} (kips)	N/A	N/A	61.2	40.8
P_{40} (kips)	N/A	N/A	88.3	57.7
F_a (ksi)	67.5	64.1	23.2	22.2
F_b (ksi)	124.5	124.5	54.5	54.5
F_e' (ksi)	1550.1	725.7	1342.4	628.4

Table 3.7-7 - Tip-over Buckling Stresses and Interaction Ratios

Load Condition	Stress or Interaction Ratio	Carbon Steel[1]		Stainless Steel[1]	
		Ligament A	Ligament B	Ligament A	Ligament B
Tip-over	Axial Compressive Stress (ksi)	6.84	4.62	3.41	2.32
	Bending Stress (ksi)	10.08	2.74	5.01	1.48
	Interaction Equation 26	0.17	0.09	0.23	0.13
	Interaction Equation 27	0.15	0.07	0.17	0.08
Tip-over + Thermal	Axial Compressive Stress (ksi)	12.61	12.46	9.93	11.31
	Bending Stress (ksi)	17.75	9.46	13.80	12.23
	Interaction Equation 26	0.31	0.26	0.64	0.70
	Interaction Equation 27	0.27	0.20	0.48	0.48

Note:

(1) Ligament A is located closest to the spacer plate centerline. Ligament B is the outermost ligament. Maximum ligament A and B axial compressive stress and bending stress occur in the bottom ligaments for the tip-over load condition.

Table 3.7-8 - Summary of W21 Spacer Plate 60*g* Side Drop Elastic Stress Analysis Results

Impact Angle	Carbon Steel Spacer Plate Maximum Stress Intensities (ksi)		Stainless Steel Spacer Plate Maximum Stress Intensities (ksi)	
	P_m	P_m+P_b	P_m	P_m+P_b
0°	23.3	58.8	11.2	39.6
15°	18.5	75.2	11.9	40.6
30°	16.4	59.6	12.4	45.8
45°	14.8	60.4	11.7	43.6

Table 3.7-9 - Summary of W21 Spacer Plate 60*g* Side Drop Plastic Analysis Results

Impact Orientation(1)	Carbon Steel Spacer Plate		Stainless Steel Spacer Plate	
	Equivalent Plastic Strain	Permanent Deformation	Equivalent Plastic Strain	Permanent Deformation
0°	0.7%	0.007 in.	0.8%	0.003 in.
45°	0.6%	0.028 in.	1.0%	0.049 in.

Note:
(1) See Figure 3.7-5 for illustration of impact orientations.

Table 3.7-10 - W21 Spacer Plate Side Drop Stresses and Buckling Interaction Ratios

Drop Condition	Impact Angle	Stress Type	Carbon Steel[1]		Stainless Steel[1]	
			Ligament A	Ligament B	Ligament A	Ligament B
60g Side Drop	0º	Axial Stress (ksi)	16.46	5.70	9.53	1.17
		Bending Stress (ksi)	7.23	5.40	6.87	3.93
		Interaction Ratio (Eq. 26)	0.29	0.13	0.52	0.11
		Interaction Ratio (Eq. 27)	0.22	0.10	0.34	0.10
	15º	Axial Stress (ksi)	17.85	15.97	11.14	9.31
		Bending Stress (ksi)	21.38	33.77	20.02	14.67
		Interaction Ratio (Eq. 26)[2]	**0.41**	**0.48**	**0.79**	0.65
		Interaction Ratio (Eq. 27)	0.35	0.43	0.62	0.48
	30º	Axial Stress (ksi)	16.22	13.21	9.33	10.11
		Bending Stress (ksi)	25.14	39.57	24.16	30.72
		Interaction Ratio (Eq. 26)[2]	0.41	0.48	0.78	**0.94**
		Interaction Ratio (Eq. 27)	0.36	0.45	0.66	0.80
	45º	Axial Stress (ksi)	13.54	10.78	6.68	8.31
		Bending Stress (ksi)	28.35	38.75	23.79	32.33
		Interaction Ratio (Eq. 26)	0.40	0.44	0.66	0.89
		Interaction Ratio (Eq. 27)	0.36	0.42	0.59	0.78
60g Side Drop + Normal Thermal	0º	Axial Stress (ksi)	22.73	13.22	15.92	10.43
		Bending Stress (ksi)	1.38	4.94	1.60	8.26
		Interaction Ratio (Eq. 26)	0.35	0.24	0.71	0.60
		Interaction Ratio (Eq. 27)	0.24	0.17	0.39	0.39
	15º	Axial Stress (ksi)	22.59	17.89	15.89	13.18
		Bending Stress (ksi)	14.77	30.63	11.97	19.35
		Interaction Ratio (Eq. 26)[2]	0.44	**0.49**	**0.87**	**0.90**
		Interaction Ratio (Eq. 27)	0.35	0.43	0.58	0.66
	30º	Axial Stress (ksi)	14.89	16.02	14.92	12.29
		Bending Stress (ksi)	38.47	30.13	14.43	18.93
		Interaction Ratio (Eq. 26)[2]	**0.49**	0.46	0.87	0.85
		Interaction Ratio (Eq. 27)	0.46	0.40	0.61	0.63
	45º	Axial Stress (ksi)	12.78	14.30	13.44	11.52
		Bending Stress (ksi)	39.37	28.12	16.89	17.34
		Interaction Ratio (Eq. 26)	0.46	0.42	0.84	0.79
		Interaction Ratio (Eq. 27)	0.44	0.37	0.62	0.58

Notes:

(1) Ligament A is located closest to the spacer plate centerline. Ligament B is the outermost ligament. Maximum ligament A and B axial compressive stress and bending stress occur in the bottom ligaments for the tip-over load condition.

(2) The impact angle for each drop condition with the highest interaction ratio for each of the four ligaments analyzed is shown in **bold**.

Table 3.7-11 - W21 Canister Shell Assembly Accident Load Combination D1 Results

Shell Component	Stress Type	Allowable Stress[1] (ksi)	Maximum Stress (ksi)	Minimum Design Margin
Top Outer	P_m	46.2	1.2	+36.4
Closure Plate	P_m+P_b[2]	69.3	25.1	+1.76
Top Outer	P_m	37.0[3]	8.9	+3.13
Closure Weld	Shear[4]	22.1[3]	2.5	+7.70
Top Inner	P_m	46.2	1.6	+27.5
Closure Plate	P_m+P_b	69.3	10.4	+5.66
Top Inner	P_m	41.6[5]	10.7	+2.89
Closure Weld	Shear[4]	24.9[5]	5.3	+3.66
Top Shield Plug Btm.	P_m	46.2	0.1	+Large
Support Pl. (DU/Pb)	P_m+P_b	69.3	1.4	+47.3
Cylindrical	P_m	46.2	18.3	+1.52
Shell	P_m+P_b	69.3	47.3	+0.47
Bottom Shell	P_m	46.2	8.5	+4.42
Extension	P_m+P_b	69.3	10.4	+5.64
Bottom	P_m	46.2	2.1	+20.8
Closure Plate	P_m+P_b	69.3	38.4	+0.80
Bottom End Plate	P_m	46.2	0.9	+51.3
(Except W21T-LL)	P_m+P_b	69.3	26.2	+1.65
W21T-LL	P_m	66.1	0.8	+82.9
Bottom End Plate	P_m+P_b	99.1	35.1	+1.83
Top Shield Plug Supt. Ring Weld	Shear	16.2	0.2	+79.2
Shell Extension Top Weld	Shear	16.2	3.0	+4.39
Shell Extension Bottom Weld	Shear	16.2	1.5	+10.1

Notes:

(1) Allowable stress intensities are based on the weaker of the W21M and W21T canister shell materials (SA-240, Type 304 stainless steel) properties at 300°F, except for the W21T-LL bottom end plate allowable stresses which are based on SA-240, Type XM-19 stainless steel at 300°F.

(2) The maximum bending stress in the top outer closure plate is determined using hand calculations assuming simply support edge conditions to demonstrate that the bending stress in the top outer closure weld may be classified as secondary.

(3) The allowable stresses for the top outer closure weld include a 0.8 weld efficiency factor in accordance with ISG-4.

(4) Shear stress in the welds is determined using hand calculations.

(5) The allowable stresses for the top inner closure weld include a 0.9 weld efficiency factor in accordance with Section 3.1.2.2 of this FSAR.

Table 3.7-12 - W21 Canister Shell Assembly Accident Load Combination D2 Results

Shell Component	Stress Type	Allowable Stress[1] (ksi)	Maximum Stress (ksi)	Minimum Design Margin
Top Outer	P_m	46.2	1.8	+24.1
Closure Plate	P_m+P_b[2]	69.3	33.4	+1.07
Top Outer	P_m	37.0[3]	10.8	+2.42
Closure Weld	Shear[4]	22.1[3]	2.2	+9.28
Top Inner	P_m	46.2	3.5	+12.3
Closure Plate	P_m+P_b	69.3	17.8	+2.90
Top Inner	P_m	41.6[5]	21.0	+0.98
Closure Weld	Shear[4]	24.9[5]	10.5	+1.37
Top Shield Plug Btm.	P_m	46.2	0.9	+48.2
Support Pl. (DU/Pb)	P_m+P_b	69.3	2.6	+25.9
Cylindrical	P_m	46.2	25.1	+0.84
Shell	P_m+P_b	69.3	55.6	+0.25
Bottom Shell	P_m	46.2	13.4	+2.45
Extension	P_m+P_b	69.3	19.2	+2.61
Bottom	P_m	46.2	3.8	+11.2
Closure Plate	P_m+P_b	69.3	47.7	+0.45
Bottom End Plate	P_m	46.2	2.7	+16.4
(Except W21T-LL)	P_m+P_b	69.3	34.0	+1.04
W21T-LL	P_m	66.1	2.5	+25.2
Bottom End Plate	P_m+P_b	99.1	34.6	+1.87
Top Shield Plug Supt. Ring Weld	Shear	16.2	0.1	+Large
Shell Extension Top Weld	Shear	16.2	3.1	+4.22
Shell Extension Bottom Weld	Shear	16.2	1.6	+9.23

Notes:

(1) Allowable stress intensities are based on the weaker of the W21M and W21T canister shell materials (SA-240, Type 304 stainless steel) properties at 300°F, except for the W21T-LL bottom end plate allowable stresses which are based on SA-240, Type XM-19 stainless steel at 300°F.

(2) The maximum bending stress in the top outer closure plate is determined using hand calculations assuming simply support edge conditions to demonstrate that the bending stress in the top outer closure weld may be classified as secondary.

(3) The allowable stresses for the top outer closure weld include a 0.8 weld efficiency factor in accordance with ISG-4.

(4) Shear stress in the welds is determined using hand calculations.

(5) The allowable stresses for the top inner closure weld include a 0.9 weld efficiency factor in accordance with Section 3.1.2.2 of this FSAR.

Table 3.7-13 - W21 Canister Shell Assembly Accident Load Combination D3 Results

Shell Component	Stress Type	Allowable Stress[1] (ksi)	Maximum Stress (ksi)	Minimum Design Margin
Top Outer	P_m	46.2	0.7	+63.1
Closure Plate	P_m+P_b[2]	69.3	6.9	+9.01
Top Outer	P_m	37.0[3]	2.8	+12.3
Closure Weld	Shear[4]	22.1[3]	0.5	+44.1
Top Inner	P_m	46.2	1.5	+30.3
Closure Plate	P_m+P_b	69.3	16.6	+3.18
Top Inner	P_m	41.6[5]	9.4	+3.44
Closure Weld	Shear[4]	24.9[5]	4.7	+4.32
Top Shield Plug Btm.	P_m	46.2	1.9	+22.9
Support Pl. (DU/Pb)	P_m+P_b	69.3	48.4	+0.43
Cylindrical	P_m	46.2	8.7	+4.34
Shell	P_m+P_b	69.3	26.2	+1.64
Bottom Shell	P_m	46.2	7.7	+5.01
Extension	P_m+P_b	69.3	28.8	+1.40
Bottom	P_m	46.2	2.1	+20.7
Closure Plate	P_m+P_b	69.3	9.0	+6.69
Bottom End Plate	P_m	46.2	3.0	+14.7
(Except W21T-LL)	P_m+P_b	69.3	5.0	+13.0
W21T-LL	P_m	66.1	2.1	+30.1
Bottom End Plate	P_m+P_b	99.1	11.3	+7.80
Top Shield Plug Supt. Ring Weld	Shear	16.2	5.3	+2.04
Shell Extension Top Weld	Shear	16.2	11.9	+0.36
Shell Extension Bottom Weld	Shear	16.2	13.3	+0.22

Notes:

(1) Allowable stress intensities are based on the weaker of the W21M and W21T canister shell materials (SA-240, Type 304 stainless steel) properties at 300°F, except for the W21T-LL bottom end plate allowable stresses which are based on SA-240, Type XM-19 stainless steel at 300°F.

(2) The maximum bending stress in the top outer closure plate is determined using hand calculations assuming simply support edge conditions to demonstrate that the bending stress in the top outer closure weld may be classified as secondary.

(3) The allowable stresses for the top outer closure weld include a 0.8 weld efficiency factor in accordance with ISG-4.

(4) Shear stress in the welds is determined using hand calculations.

(5) The allowable stresses for the top inner closure weld include a 0.9 weld efficiency factor in accordance with Section 3.1.2.2 of this FSAR.

Table 3.7-14 - W21 Canister Shell Assembly Accident Load Combination D4 Results

Shell Component	Stress Type	Allowable Stress[1] (ksi)	Maximum Stress (ksi)	Minimum Design Margin
Top Outer	P_m	46.2	14.8	+2.12
Closure Plate	P_m+P_b[2]	69.3	25.0	+1.77
Top Outer	P_m	37.0[3]	13.7	+1.70
Closure Weld	Shear[4]	22.1[3]	0.3	+84.0
Top Inner	P_m	46.2	20.6	+1.24
Closure Plate	P_m+P_b	69.3	44.6	+0.55
Top Inner	P_m	41.6[5]	31.8	+0.31
Closure Weld	Shear[4]	24.9[5]	15.9	+0.57
Top Shield Plug Btm.	P_m	46.2	[6]	[6]
Support Pl. (DU/Pb)	P_m+P_b	69.3	[6]	[6]
Cylindrical	P_m	46.2	24.5	+0.89
Shell	P_m+P_b	69.3	36.6	+0.89
Bottom Shell	P_m	46.2	24.5	+0.89
Extension	P_m+P_b	69.3	36.6	+0.89
Bottom	P_m	46.2	20.6	+1.24
Closure Plate	P_m+P_b	69.3	44.6	+0.55
Bottom End Plate	P_m	46.2	20.6	+1.24
(Except W21T-LL)	P_m+P_b	69.3	44.6	+0.55
W21T-LL	P_m	66.1	20.6	+2.21
Bottom End Plate	P_m+P_b	99.1	44.6	+1.22
Top Shield Plug Supt. Ring Weld	Shear	16.2	[6]	[6]
Shell Extension Top Weld	Shear	16.2	[6]	[6]
Shell Extension Bottom Weld	Shear	16.2	[6]	[6]

Notes:

(1) Allowable stress intensities are based on the weaker of the W21M and W21T canister shell materials (SA-240, Type 304 stainless steel) properties at 300°F, except for the W21T-LL bottom end plate allowable stresses which are based on SA-240, Type XM-19 stainless steel at 300°F.

(2) The maximum bending stress in the top outer closure plate is determined using hand calculations assuming simply support edge conditions to demonstrate that the bending stress in the top outer closure weld may be classified as secondary.

(3) The allowable stresses for the top outer closure weld include a 0.8 weld efficiency factor in accordance with ISG-4.

(4) Shear stress in the welds is determined using hand calculations.

(5) The allowable stresses for the top inner closure weld include a 0.9 weld efficiency factor in accordance with Section 3.1.2.2 of this FSAR.

(6) Stresses are insignificant.

Table 3.7-15 - W21 Canister Shell Assembly Accident Load Combination D5 Results

Shell Component	Stress Type	Allowable Stress[1] (ksi)	Maximum Stress (ksi)	Minimum Design Margin
Top Outer	P_m	46.2	5.6	+7.25
Closure Plate	P_m+P_b[2]	69.3	10.9	+5.36
Top Outer	P_m	37.0[3]	8.0	+3.62
Closure Weld	Shear[4]	22.1[3]	0.3	+84.0
Top Inner	P_m	46.2	12.1	+2.82
Closure Plate	P_m+P_b	69.3	26.6	+1.61
Top Inner	P_m	41.6[5]	32.8	+0.27
Closure Weld	Shear[4]	24.9[5]	16.4	+0.52
Top Shield Plug Btm.	P_m	46.2	[6]	[6]
Support Pl. (DU/Pb)	P_m+P_b	69.3	[6]	[6]
Cylindrical	P_m	46.2	18.6	+1.48
Shell	P_m+P_b	69.3	32.2	+1.15
Bottom Shell	P_m	46.2	18.6	+1.48
Extension	P_m+P_b	69.3	32.2	+1.15
Bottom	P_m	46.2	12.1	+2.82
Closure Plate	P_m+P_b	69.3	26.6	+1.61
Bottom End Plate	P_m	46.2	12.1	+2.81
(Except W21T-LL)	P_m+P_b	69.3	26.6	+1.61
W21T-LL	P_m	66.1	12.1	+4.46
Bottom End Plate	P_m+P_b	99.1	26.6	+2.73
Top Shield Plug Supt. Ring Weld	Shear	16.2	[6]	[6]
Shell Extension Top Weld	Shear	16.2	9.8	+0.65
Shell Extension Bottom Weld	Shear	16.2	9.8	+0.65

Notes:

(1) Allowable stress intensities are based on the weaker of the W21M and W21T canister shell materials (SA-240, Type 304 stainless steel) properties at 300°F, except for the W21T-LL bottom end plate allowable stresses which are based on SA-240, Type XM-19 stainless steel at 300°F.

(2) The maximum bending stress in the top outer closure plate is determined using hand calculations assuming simply support edge conditions to demonstrate that the bending stress in the top outer closure weld may be classified as secondary.

(3) The allowable stresses for the top outer closure weld include a 0.8 weld efficiency factor in accordance with ISG-4.

(4) Shear stress in the welds is determined using hand calculations.

(5) The allowable stresses for the top inner closure weld include a 0.9 weld efficiency factor in accordance with Section 3.1.2.2 of this FSAR.

(6) Stresses are insignificant.

Table 3.7-16 - W21 Canister Basket Assembly Accident Load Combination Results

Basket Component	Stress Type	Allowable Stress (ksi)	L.C. D3 ($T+A_s$)		L.C. D4 ($T+A_t$)		L.C. D5 ($T+A_{s1}$)		L.C. D6 ($D^{(1)}+T+E$)	
			Maximum Stress (ksi)	Minimum Design Margin	Maximum Stress (ksi)	Minimum Design Margin	Maximum Stress (ksi)	Minimum Design Margin	Maximum Stress (ksi)	Minimum Design Margin
2-inch Thick Stainless Steel Spacer Plate	P_m	60.6	0.0	+Large	12.4	+3.89	9.3	+5.52	1.8	+32.7
	P_m+P_b	90.8	6.1	+13.9	45.8	+0.98	23.3	+2.90	4.5	+19.2
	Buckling I.R.(2)	1.0	(7)	(7)	0.94	+0.06	0.70	+0.43	(7)	(7)
¾-inch Thick Carbon Steel Spacer Plate	P_m	75.4	0.0	+Large	23.3	+2.24	18.4	+3.10	4.2	+17.0
	P_m+P_b	113.1	14.6	+6.75	75.2	+0.50	46.0	+1.46	10.2	+10.1
	Buckling I.R.(2)	1.0	(7)	(7)	0.49	+1.04	0.31	+2.23	(7)	(7)
2-inch Thick Stainless Steel Bottom End Spacer Plate	P_m	62.4	0.0	+Large	(6)	(6)	(6)	(6)	1.8	+33.7
	P_m+P_b	93.6	26.3	+2.56	(6)	(6)	(6)	(6)	5.8	+15.1
	Buckling I.R.(2)	1.0	(6)	(6)	(6)	(6)	(6)	(6)	(6)	(6)
Support Rod Segments	P_m	61.5	16.5	+2.73	2.8	+21.0	(7)	(7)	0.9	+67.3
	P_m+P_b	92.2	37.9	+1.43	47.4	+0.95	(7)	(7)	5.0	+17.4
	Buckling I.R.(2)	1.0	0.84	+0.19	(4)	(4)	(4)	(4)	(4)	(4)
W21M Supt. Rod Threads	P_m	61.5	(7)	(7)	25.6	+1.40	(7)	(7)	4.4	+13.0
W21T Supt. Rod Threads	P_m	95.3	(7)	(7)	35.1	+1.72	(7)	(7)	13.9	+5.86
Support Sleeve	P_m	33.6	7.3	+3.58	(4)	(4)	(4)	(4)	(4)	(4)
	P_m+P_b	50.4	9.5	+4.33	(4)	(4)	(4)	(4)	(4)	(4)
	Buckling I.R.(2)	1.0	0.63	+0.59	(4)	(4)	(4)	(4)	(4)	(4)
Guide Tube	P_m	39.1	14.0	+1.79	13.6	+1.88	(7)	(7)	2.6	+14.0
	P_m+P_b	58.7	14.0	+3.19	54.0	+0.09	(7)	(7)	23.8	+1.47
	Buckling	1.0(2)/137(5)	14.0(5)	+8.79	0.48(2)	+1.08	(7)	(7)	(7)	(7)
Guide Tube Longitudinal Seam Weld	P_m	23.5(8)	(7)	(7)	4.1	+4.73	(7)	(7)	(7)	(7)
	P_m+P_b	35.2(8)	(7)	(7)	23.6	+0.49	(7)	(7)	(7)	(7)

Notes on following page:

Notes for Table 3.7-16:

(1) Either vertical or horizontal dead weight.

(2) Buckling interaction ratio (I.R.) calculated in accordance with NUREG/CR-6322.

(3) Bounded by buckling evaluation of most highly loaded 2-inch stainless steel spacer plate.

(4) Bounded by storage cask end drop condition.

(5) The allowable guide tube axial compressive stress for the storage cask end drop condition is 137 ksi, as discussed in Section 3.7.3.2.3.

(6) Bounded by other 2-inch stainless steel spacer plates.

(7) Bounded by transfer cask side drop condition.

(8) Allowable stresses include a 60% weld efficiency factor. This is applicable only to a full penetration weld with surface PT examination only and restricted in location to the ¼ span of panel width.

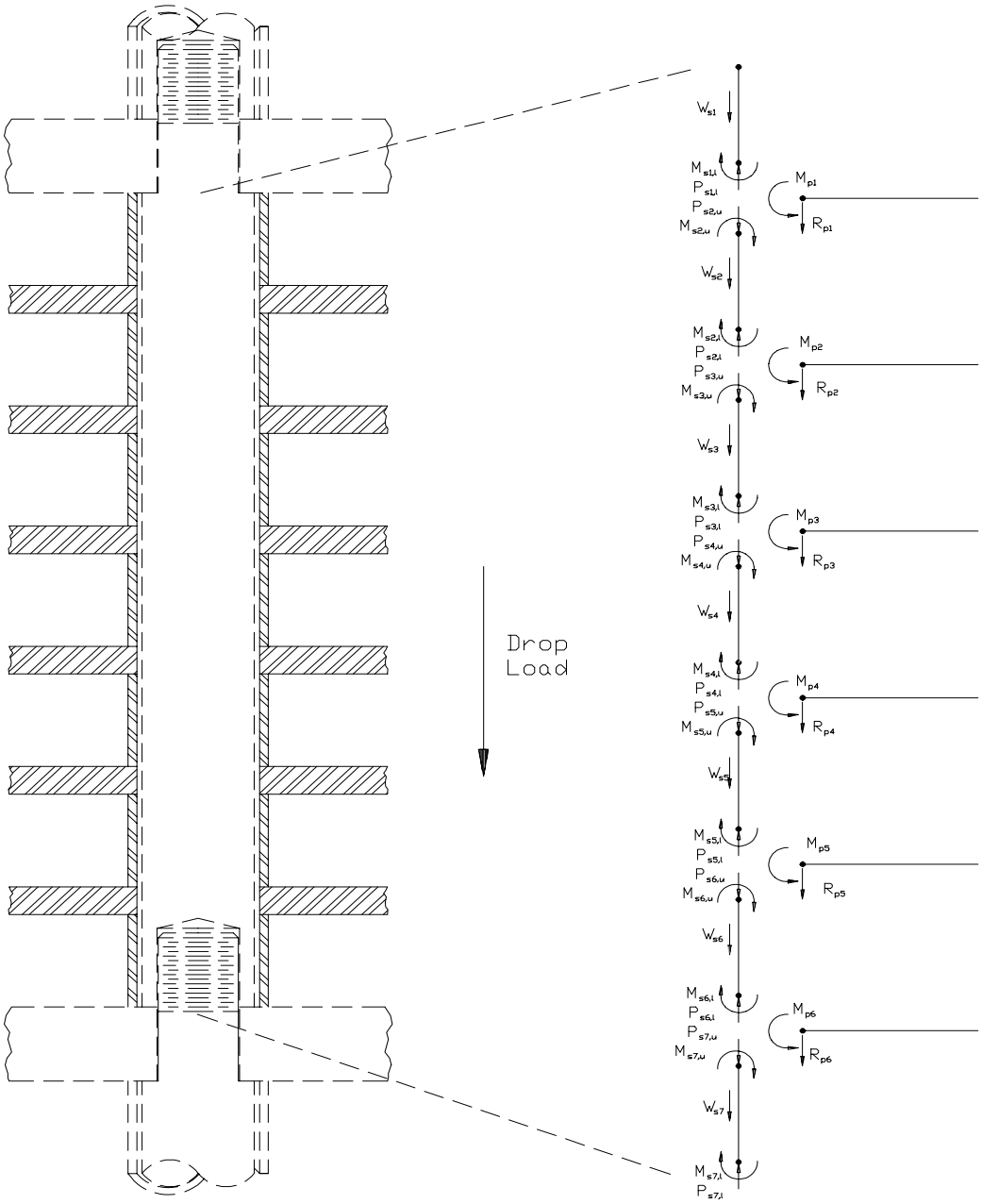

Figure 3.7-1 - W21 Support Sleeve End Drop Free Body Diagram

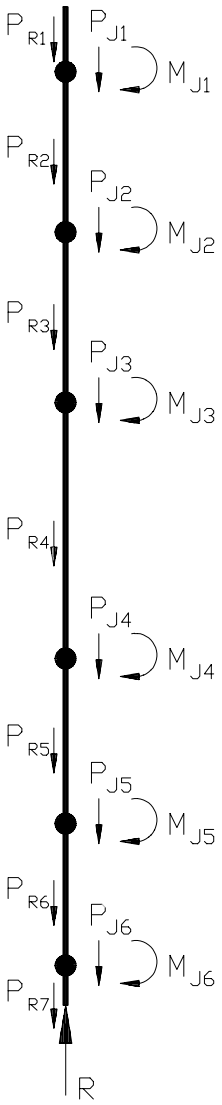

Figure 3.7-2 - W21 Support Rod End Drop Free Body Diagram

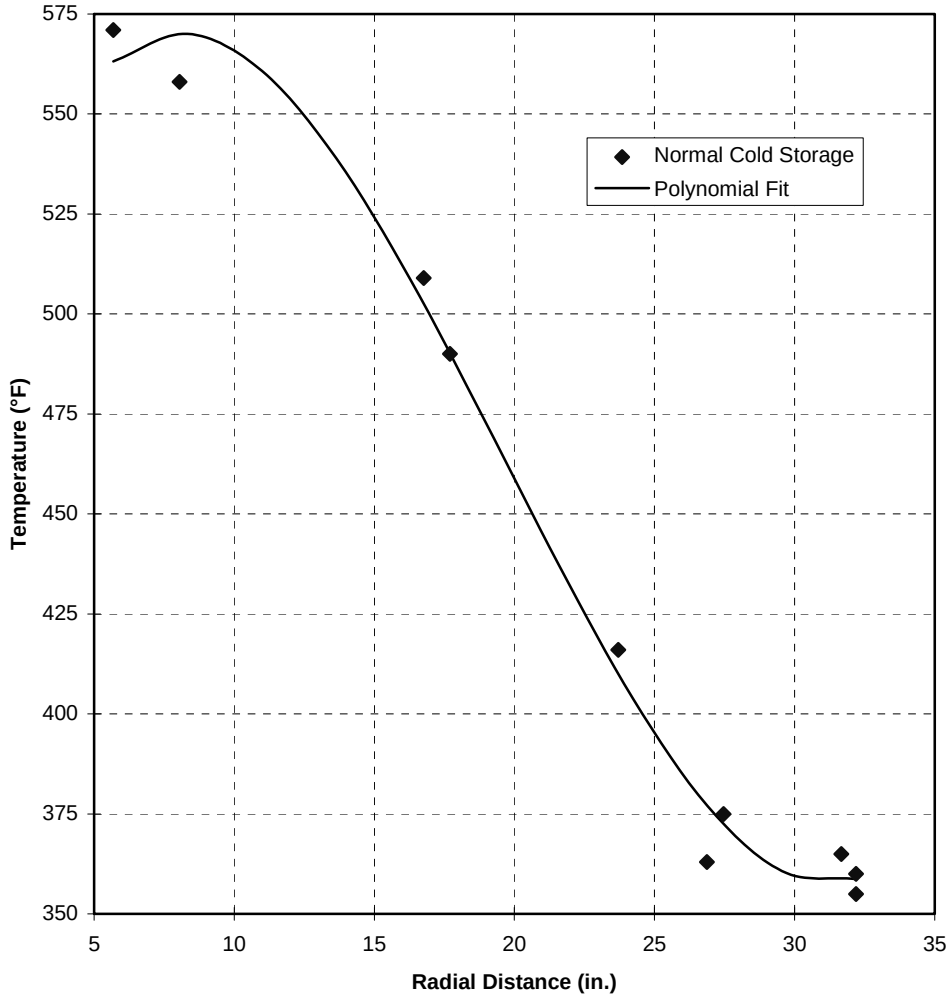

Figure 3.7-3 - W21 Carbon Steel Spacer Plate Design Thermal Gradient

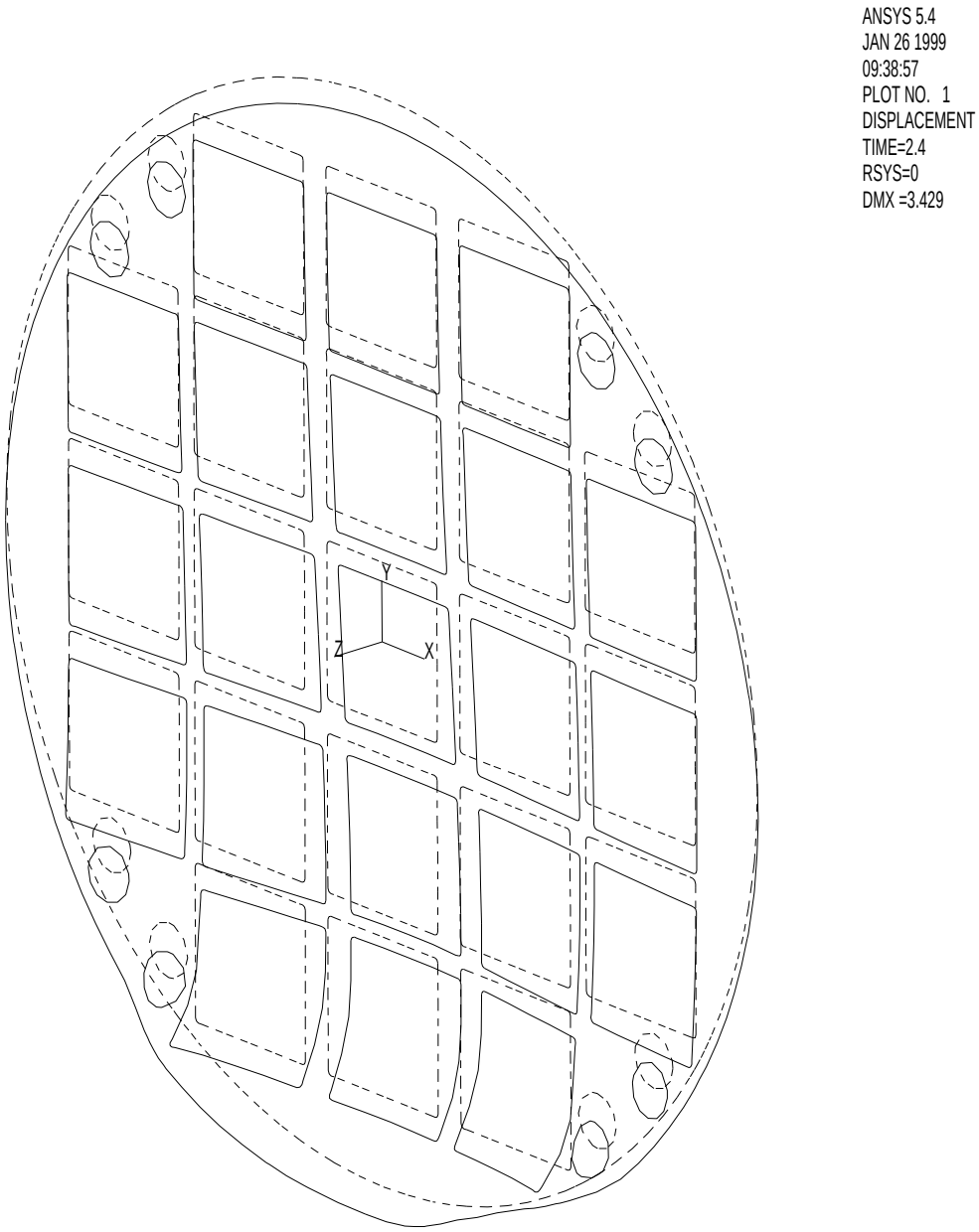

Figure 3.7-4 - W21 Spacer Plate Deformed Shape for Combined Tip-over and Thermal Loading (Time=2.4)

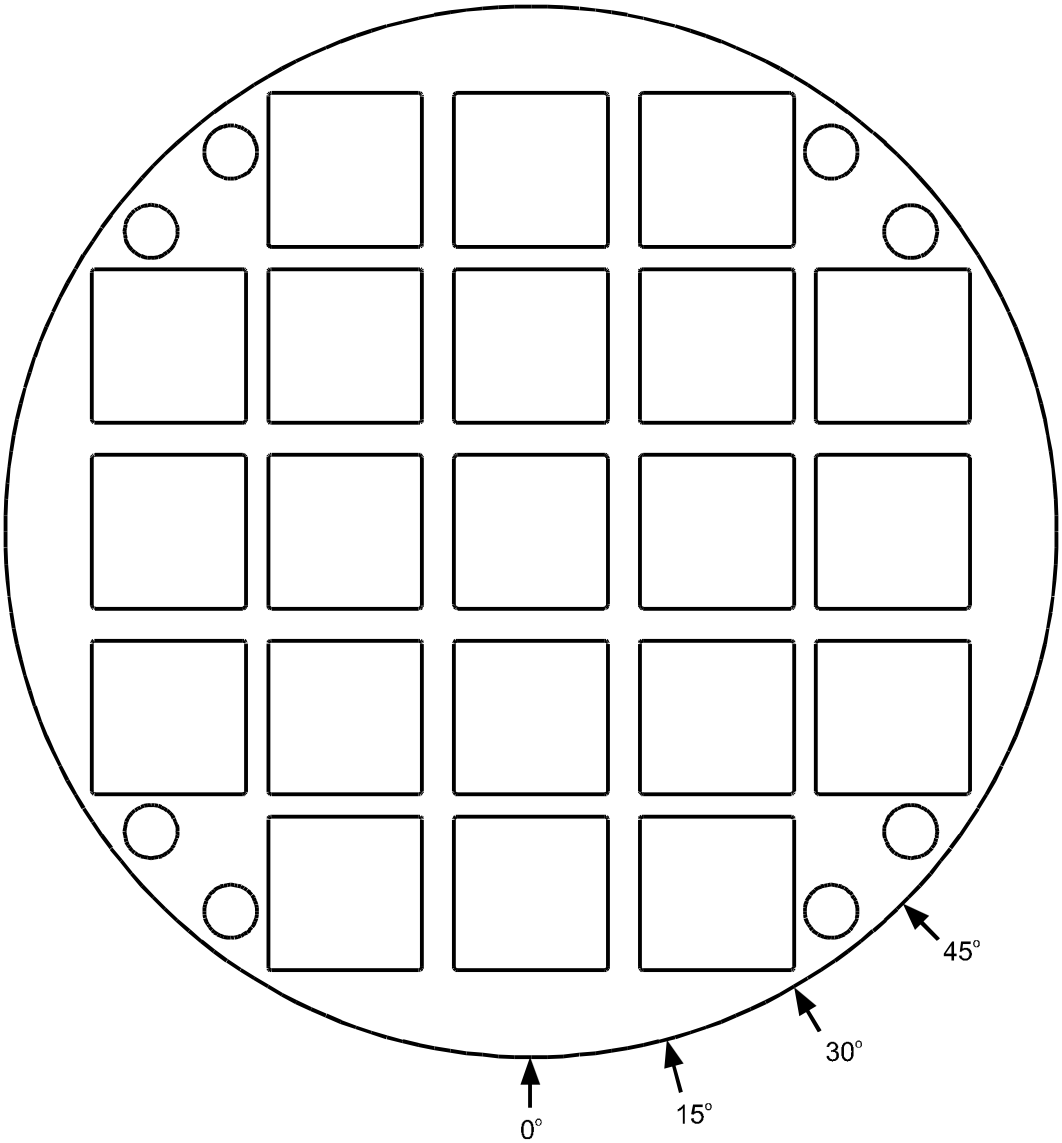

Figure 3.7-5 - W21 Spacer Plate Side Drop Impact Orientations Evaluated

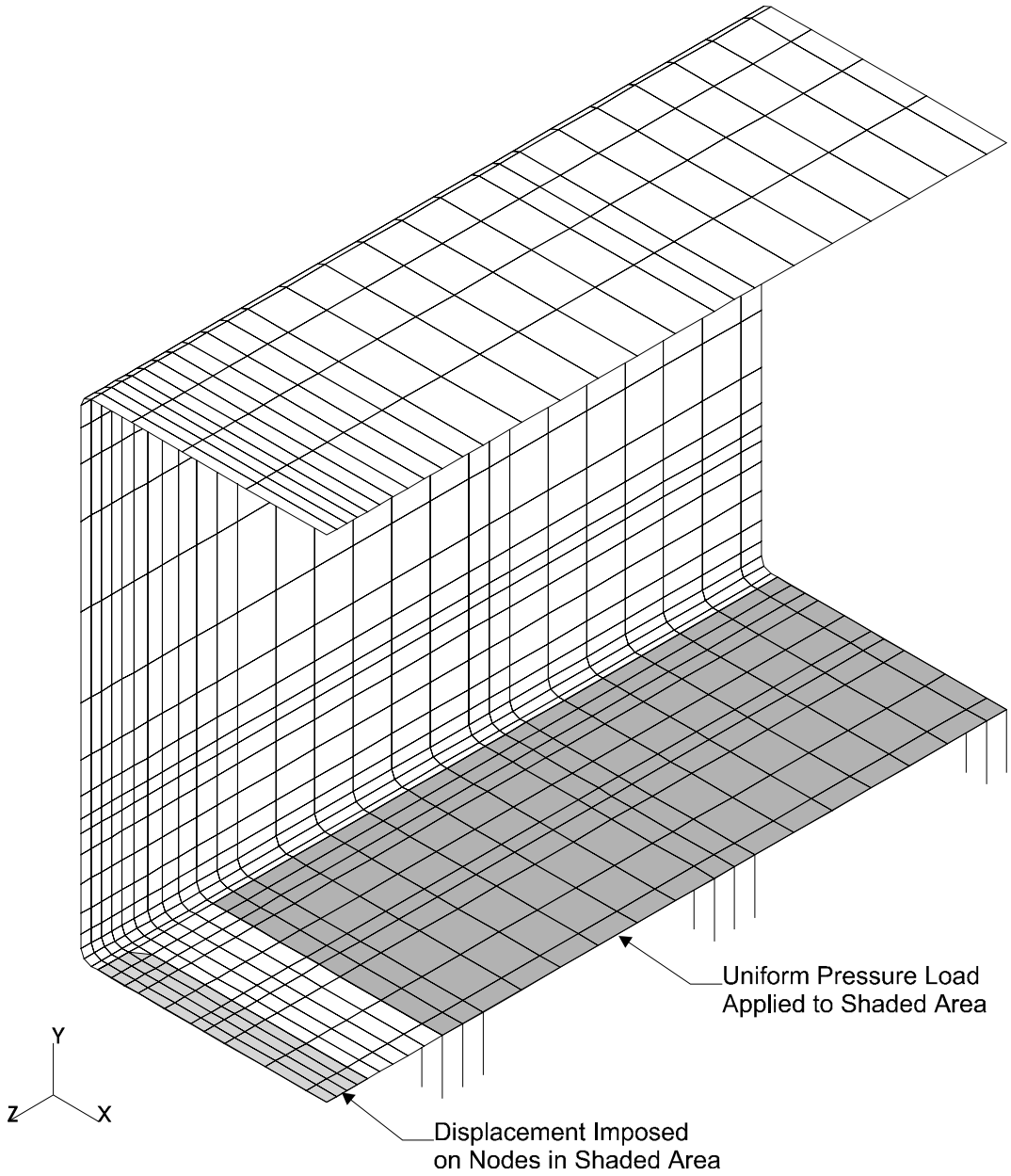

Figure 3.7-6 - W21 Guide Tube 60*g* Side Drop Loads for Concentrated Fuel Grid Spacer Loading Evaluation

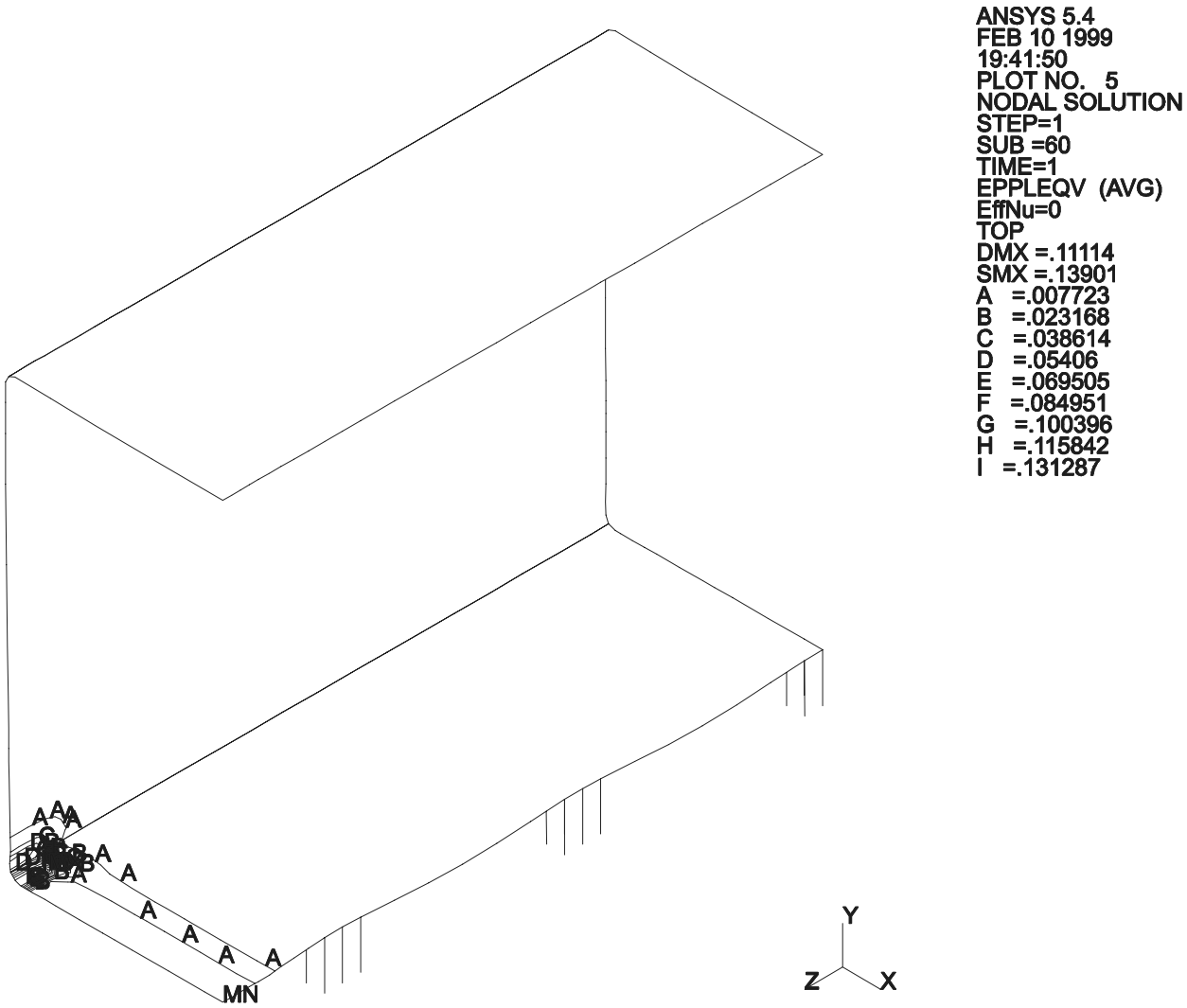

Figure 3.7-7 - W21 Guide Tube 60*g* Side Drop Plastic Strain for Concentrated Fuel Load At Grid Spacers

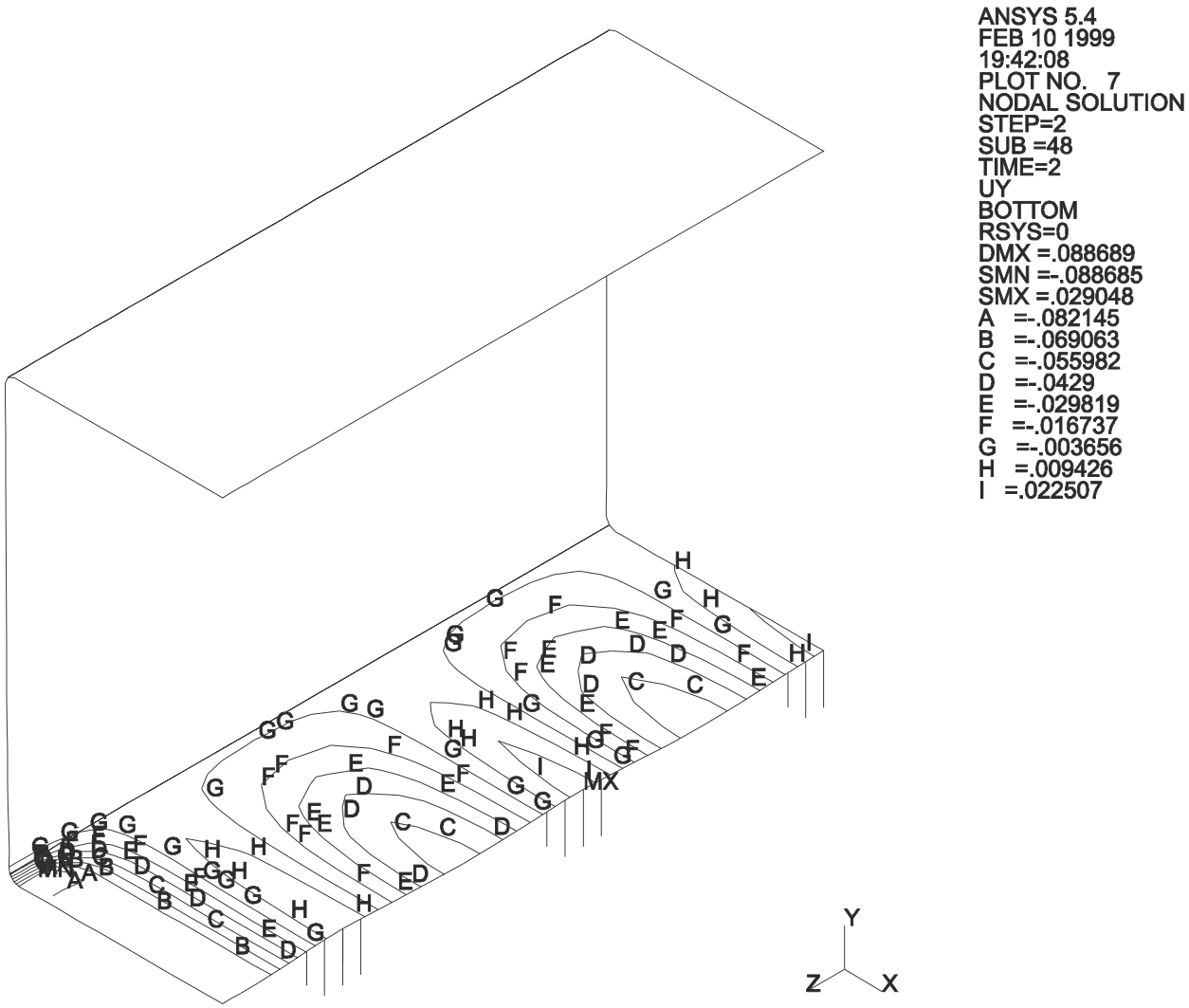

Figure 3.7-8 - W21 Guide Tube 60*g* Side Drop Permanent Deformation for Concentrated Fuel Load At Grid Spacers

This page intentionally left blank.

3.8 Fuel Rods

Maintaining the integrity of the fuel rod cladding during normal conditions of operation is a principal design function of the FuelSolutions™ W21 canister, in accordance with 10CFR72. As such, the structural integrity of the fuel rod cladding is maintained throughout the canister storage life in accordance with 10CFR72 regulations. The dominant failure mechanism for fuel rod cladding under elevated temperatures in dry storage is thermal induced creep sustained over long time periods. The risk of this type of failure in zircaloy clad fuels is effectively eliminated by maintaining peak cladding temperatures sufficiently low to limit creep in dry storage. As discussed in Section 4.3.2 of this FSAR, the peak fuel cladding temperatures for all SNF accommodated in the FuelSolutions™ W21 canister do not exceed the allowable cladding temperatures. This assures that gross cladding failure is precluded.

In addition to thermally induced cladding failure, structural failure of the fuel cladding in the event of a storage cask tip-over, transfer cask side drop, or storage cask bottom end drop is evaluated. The FuelSolutions™ W21 canister is designed to withstand bounding tip-over and transfer cask side drop loads of 30*g* and 60*g*, respectively. For transverse impact loads resulting from the storage cask tip-over or transfer cask side drop, studies indicate that damage to SNF rods will not occur for loads less than 63*g*.[29] Therefore, the structural integrity of the fuel cladding will be maintained in the event of a postulated storage cask tip-over or transfer cask side drop.

For the postulated storage cask end drop, the peak acceleration for the canister is 28*g*, consisting of a half-sine wave pulse with a duration of 35 msec. Per NUREG/CR-3966, the maximum dynamic amplification factor for a half-sine wave pulse is 1.75. Multiplying the peak acceleration by the dynamic amplification factor, the maximum equivalent static end drop load for the canister is determined to be 49*g*. The fuel rod cladding is evaluated for the end drop to assure that the integrity of the fuel assembly will be maintained. The dominant failure mode of the fuel rods for the end drop loading is buckling. The fuel rod end drop buckling evaluation is performed assuming that the fuel rod cladding tubes support the entire weight of the fuel pellets and control components. The evaluation addresses all PWR fuel types accommodated by the FuelSolutions™ W21 canister. Each PWR fuel type is identified in Table 3.8-1, along with the weight and dimensions used in the end drop buckling evaluation.

The fuel rod buckling evaluation is performed using the material properties of zircaloy that produce the most conservative result. The effect of irradiation and exposure to short-term elevated temperatures (such as vacuum drying) for high burnup fuels are considered. Test data for fuel assemblies with high burnup shows an increase in the strength of zircaloy.[30] The effects of short-term high temperature conditions, such as vacuum drying, on the mechanical properties (i.e., yield strength and elastic modulus) of cladding are not dependant on the level of burnup. Exposure to high temperatures could potentially result in annealing of the fuel cladding material, thus reducing the cladding strength to that of the unirradiated condition. Therefore, the use of

[29] UCID-21246, *Dynamic Impact Effects on Spent Fuel Assemblies*, Chun, Witte, and Schwartz, Lawrence Livermore National Laboratory, September 1987.

[30] WCAP-15168, *Dry Storage of High Burnup Spent Nuclear Fuel*, Westinghouse Electric Company, March 1999.

strength properties for unirradiated fuel cladding is conservative for the cladding buckling evaluation. Thus, the elastic modulus (10.4 x 10^6 psi) and dynamic yield strength (80.5 ksi) of unirradiated zircaloy at 750°F are used for the buckling evaluation of the fuel rods.

Classical Euler buckling solutions are used to determine the load at which the onset of buckling occurs in each PWR fuel type. In the event of a bottom end drop, the fuel assembly is supported laterally by the basket assembly guide tubes at the locations of the fuel grid spacers. Thus, the fuel rods will behave as column supported laterally at the locations of the grid spacers.

For a bottom end drop, the governing unsupported span of the fuel rods is typically located at or near the bottom end of the fuel assembly since the axial loads are highest at the bottom end. Bounding fuel assembly design weights, including the weight of control components where applicable, are used for the buckling evaluation. The fuel rod unsupported span lengths used for the Euler buckling evaluation are summarized in Table 3.8-1. The fuel rod is conservatively treated as a simply supported column, assuming an effective length factor of 1.0.

The Euler buckling load (i.e., the theoretical axial load at which the onset of buckling occurs) is calculated for each fuel type as:

$$P_{cr} = \frac{\pi^2 EI}{L^2}$$

By rearranging terms, the end drop *g*-load corresponding to the onset of buckling is determined by:

$$G_{cr} = \frac{P_{cr}}{W_r} = \frac{\pi^2 EI}{L^2 W_r}$$

where:

E = 10.4 x 10^6 psi, elastic modulus of zircaloy

I = Fuel rod cladding moment of inertia

= $\pi(d_o^4 - d_i^4)/64$

d_o = Outside diameter of fuel cladding tube (see Table 3.8-1)

d_i = $d_o - 2t$, Inside diameter of fuel cladding tube

t = Wall thickness of cladding tube (Table 3.8-1)

L = Unsupported length of the fuel rod (Table 3.8-1)

W_r = Fuel assembly weight supported by each fuel rod cladding tube (Table 3.8-1)

As shown in Table 3.8-1, the WE 17x17 OFA fuel type has the lowest buckling capacity (10.1*g*) for a bottom end drop condition. Recognizing that the onset of buckling does not imply failure of the fuel cladding, a more realistic evaluation is performed to determine the load capacity of the governing fuel type for the bottom end drop.

The governing fuel type in its post-buckled configuration is evaluated using classical hand calculations. For this evaluation, the fuel assembly grid spacers are assumed to be in contact with the wall of the basket assembly guide tube. In the post-buckled configuration, each fuel rod deflects laterally until it contacts the wall of the guide tube or the adjacent fuel rod. The maximum possible lateral deflection of the fuel rod furthest from the supporting guide tube wall is calculated as the sum of the clear space between the adjacent rods plus the distance between the edge of the outermost fuel rod and fuel grid spacer. For the WE 17x17 OFA fuel type, this distance is equal to 2.245 inches. Once the deflection of the fuel rod furthest from the supporting guide tube wall reaches this value, any additional loading results in spreading of the contact region, as shown in Figure 3.8-1.

The maximum stresses in the fuel rod cladding for the post-buckled configuration shown in Figure 3.8-1 are calculated and compared to the cladding material yield strength to determine the load capacity of the fuel rod. The fuel rod cladding stress calculations are performed using a maximum fuel rod weight of 5.538 pounds per rod, which excludes the weight of the fuel assembly below the bottom end fuel rod span. Upper and lower bound load capacity evaluations are performed both with and without a resisting moment at the grid spacer supports. The lower bound load capacity is determined by the condition with no resisting moment at the grid spacers, treating the fuel rod as a simply supported column. This assumption is conservative since the fuel rods are continuous and thus, the adjacent fuel rod spans provide moment restraint.

The end moment restraint developed in the fuel rod is calculated as:

$$M_r = K\alpha_i$$

where E, I, and L are defined above, and:

K = Rotational spring constant of fuel rod cladding tube

= 3EI/L

α_i = Angle of rotation at ends of fuel rod span at critical load

The fuel rod stress calculation assumes that the unsupported section of the fuel rod deforms into a sinusoidal shape as shown in Figure 3.8-1. The peak value of the half-sine shaped deflection is δ. The remaining free span (r) is less than half of the fuel rod span and can be represented by a factor of the length of the segment:

$$r = \varepsilon\left(\frac{L_s}{2}\right)$$

The chord (q) of the arc of the free span is:

$$q = \left[r^2 + y^2\right]^{1/2}$$

An equation for δ can be developed from the geometric relation:

$$\frac{y}{r} = \frac{q}{2\,(R - \delta)}$$

Where R, the radius of curvature at the point of peak elastic deflection of the free span, is computed as the inverse of the second derivative of the assumed sine wave deflection shape.

Hence, based on the geometry in Figure 3.8-1, the peak deflection is:

$$\delta = \tfrac{1}{2}\left[\left[r\,\frac{q}{2\,y}\right]^2 + 4\left(\frac{q}{\pi}\right)^2\right]^{1/2} - r\,\frac{q}{4\,y}$$

For the assumed remaining free span, r, the corresponding rigid body angle is:

$$\alpha_i = \text{atan}\left[\frac{y}{r}\right]$$

and the critical gravitational acceleration is:

$$a_i = \pi^2\,E\,\frac{I}{(q)^2\,W_r}$$

Therefore, the direct axial load in the unsupported portion of the beam due to this load is:

$$F_d = \left(W_r\,a_i\right) x \cos(\alpha_i)$$

For the unsupported section of fuel rod, the maximum stress is at the middle and is calculated as:

$$\text{Bending } S_{bi} = \frac{\left(F_d\,\delta - M_r\right) d}{2\,I}$$

$$\text{Axial } S_{ai} = \frac{F_d}{A}$$

$$\text{Total } S_{Ti} = S_{bi} + S_{ai}$$

The allowable stress ratio is then calculated as:

$$SR_i = \frac{\sigma_y}{S_{Ti}}$$

At the grid strap, the stress due to the axial force and the resisting moment is:

$$S_{gsi} = \frac{W_r\, a_i}{A} + \frac{M_r\, d}{2\, I}$$

This stress results in an allowable stress ratio for the grid strap of:

$$SR_{igs} = \frac{\sigma_y}{S_{gsi}}$$

The iterations are performed by varying the value of the factor ε until SR_i or SR_{igs} is equal but not less than 1.0. The corresponding gravitational acceleration is the critical load that must be compared to the 49*g* design basis end drop load. Following this procedure for low burnup fuel, the critical *g*-load at which the fuel rod cladding stress reaches yield is determined to be 52*g* with no moment restraint and 86*g* with moment restraint. Since the lower bound load capacity of the fuel rod exceeds the design basis end drop load of 49*g*, the integrity of the fuel is maintained in the event of an end drop.

For buckling of high burnup fuel, the cladding wall thickness is adjusted for a maximum of 70μm oxide layer and an oxide-to-metal ratio of 1.56. The material properties used for the high burnup fuel buckling evaluation are the same as those for the low burnup case, since the yield strength and elastic modulus are not dependent on the level of burnup. Test data have shown that high burnup fuel retains sufficient strength and ductility during relatively short-term fast strain conditions. The critical buckling load for the high burnup fuel is determined to be 49*g* with no moment restraint and 80*g* with moment restraint. The critical buckling load meets the design basis end drop load of 49*g*.

The results of the fuel rod evaluation demonstrate that the thermally induced gross cladding failure is not credible for the intended service conditions. Furthermore, the structural integrity of the fuel cladding will be maintained in the event of a postulated storage cask tip-over, storage cask end drop, or transfer cask side drop. Therefore, fuel cladding integrity is maintained throughout the 100-year design life of the FuelSolutions™ W21 canister assembly.

Table 3.8-1 - Fuel Assembly Buckling Parameters

Fuel Assembly Class	Fuel Assembly Type	Rod Span Length, L_s (in.)	Rod O.D., d (in.)	Clad Thk., t (in.)	Rod M.O.I., I (in^4)	Buckling Load, P_{cr} (lb)	Weight per Rod, W_r (lb)	Critical G-load, G_{cr} (g)
B&W 15x15 (w/ CC)	B&W 15x15 Mark B, B2-B8, B4Z, & B5Z	22.0000	0.4300	0.0265	6.87E-04	145.61	7.47	19.50
B&W 17x17 (w/ CC)	B&W 17x17 Mark C	20.3750	0.3790	0.0240	4.24E-04	104.73	5.72	18.30
CE 14x14 (w/ CC)	CE 14x14	11.0000	0.4400	0.0280	7.73E-04	655.33	7.78	84.25
	CE 14x14 ANF	12.0400	0.4400	0.0310	8.38E-04	593.14	7.78	76.26
CE 14x14 A (w/ CC)	CE 14x14 St. Lucie 1	11.0000	0.4400	0.0280	7.73E-04	655.33	7.78	84.25
CE 16x16	CE 16x16 ANO2	7.6875	0.3820	0.0250	4.49E-04	779.64	6.06	128.67
CE System 80	CE 16x16 System 80	7.6875	0.3820	0.0250	4.49E-04	779.64	6.19	125.94
WE 14x14 (w/ CC)	WE 14x14 OFA	24.2070	0.4000	0.0243	5.08E-04	89.01	7.31	12.18
	WE 14x14 STD/LOPAR	24.2020	0.4220	0.0225	5.65E-04	99.04	7.31	13.56
	WE 14x14 B&W	24.2020	0.4220	0.0225	5.65E-04	99.04	7.31	13.56
	WE 14x14 ANF	21.9750	0.4240	0.0300	7.25E-04	154.05	7.31	21.08
WE 15x15 (w/ CC)	WE 15x15 OFA	24.2070	0.4220	0.0242	6.00E-04	105.18	7.28	14.46
	WE 15x15 STD/LOPAR	24.2020	0.4220	0.0242	6.00E-04	105.22	7.28	14.46
	WE 15x15 B&W	24.2020	0.4220	0.0242	6.00E-04	105.22	7.28	14.46
	WE 15x15 ANF	24.2250	0.4240	0.0300	7.25E-04	126.76	7.28	17.42
WE 17x17 (w/ CC)	WE 17x17 OFA	24.5150	0.3600	0.0225	3.41E-04	58.27	5.75	**10.13**
	WE 17x17 STD/LOPAR	24.4300	0.3740	0.0225	3.85E-04	66.26	5.75	11.52
	WE 17x17 B&W	24.4300	0.3740	0.0225	3.85E-04	66.26	5.75	11.52
	WE 17x17 ANF	24.4300	0.3600	0.0250	3.71E-04	63.83	5.75	11.10
Fort Calhoun (w/ CC)	CE 14x14 Fort Calhoun	13.7500	0.4400	0.0280	7.73E-04	419.41	7.31	57.36
Palisades	CE 15x15 Palisades	14.1250	0.4180	0.0260	6.18E-04	317.80	6.30	50.47
St. Lucie 2 (w/ CC)	CE 16x16 Lucie 2	16.2777	0.3820	0.0250	4.49E-04	173.89	5.79	30.04
Yankee Rowe	CE 15x16 Yankee Rowe	16.3000	0.3691	0.0260	4.15E-04	160.23	3.45	46.44
	ANF 15x16 Yankee Rowe	18.3000	0.3650	0.0240	3.76E-04	115.11	3.32	34.66
							Minimum	***10.13***

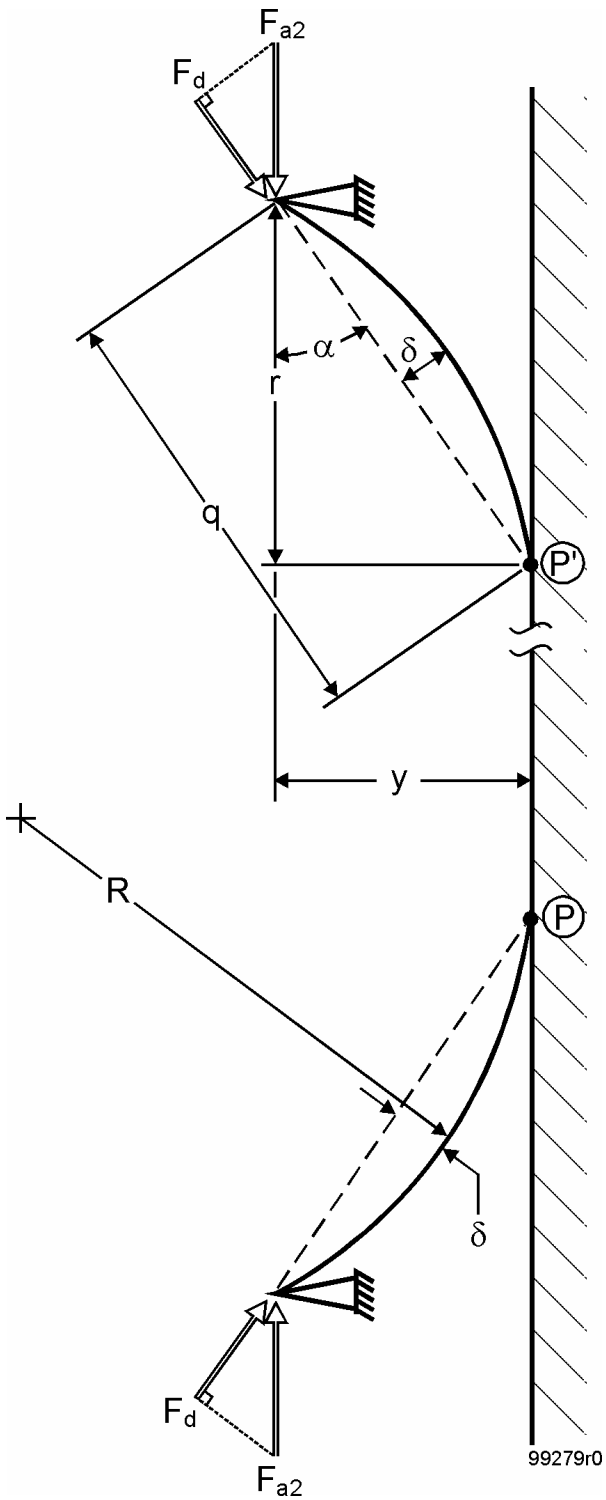

Figure 3.8-1 - Fuel Rod Deflection in Post-Buckled Configuration

This page intentionally left blank.

3.9 Supplemental Data

3.9.1 Spacer Plate and Fuel Grid Spacer In-Plane Tributary Weights

The spacer plate in-plane tributary weights for each of the FuelSolutions™ W21 canister basket assemblies are calculated based on a uniform fuel load assumption to identify the most heavily loaded spacer plate for the postulated storage cask tip-over and transfer cask side drop elastic stress evaluations. The spacer plate tributary weight includes the spacer plate self-weight plus the tributary weight of the support rod assemblies, guide tube assemblies, and the heaviest fuel assembly class accommodated by each W21 canister class and type. The tributary width of each spacer plate is taken as the distance from the middle of the span on one side of the spacer plate to the middle of the span on the opposite side. The top and bottom end spacer plate tributary widths are equal to the distance from the end of the basket assembly to the middle of the span interior to the spacer plate.

The weights of the fuel assemblies and guide tube assemblies are assumed to be evenly distributed over their lengths. The weights and lengths of the various fuel assemblies accommodated by each basket configuration are summarized in Table 3.9-1. The fuel assembly class with the highest weight per unit length is used for the spacer plate tributary weight calculation. The tributary weights of each spacer plate in all of the W21M canister types are shown in Table 3.9-2 through Table 3.9-5. The W21T spacer plate tributary weights are less than or equal to those of the W21M carbon steel spacer plates.

In order to evaluate the most conservative loading for various horizontal loading conditions, such as dead weight or transfer cask side drop, structural evaluations are also performed assuming that the weight of the fuel assembly is applied to the basket structural components as concentrated loads at the fuel grid spacers. In order to identify the controlling fuel type for these evaluations, the fuel assembly grid spacer tributary weights are calculated for each fuel type accommodated in the W21 canister. The fuel assembly grid spacer tributary weight is calculated as the product of the fuel line load (i.e., fuel assembly weight per unit length from Table 3.9-1) and the maximum grid spacer longitudinal pitch (i.e., longitudinal distance between centers of adjacent grid spacers). The calculated tributary weight for each fuel assembly class is calculated in this manner and presented in Table 3.9-1 along with the maximum fuel grid spacer pitch. As shown in Table 3.9-1, the largest fuel assembly grid spacer tributary weight is 256.9 pounds for the WE 15x15 fuel with control components, which is accommodated in the W21M-SD or W21T-SL basket assemblies. Consequently, this is the controlling basket type and fuel assembly combination which is used for the structural evaluations which assume a concentrated load at the fuel grid spacers.

3.9.2 Finite Element Analysis Stress Evaluation Criteria

3.9.2.1 Canister Shell Stress Evaluation Locations

The W21 canister shell structural evaluation is performed using the axisymmetric and three-dimensional finite element models described in Sections 3.9.3.1 and 3.9.3.2. Linearized section stresses are used to determine the average membrane, linearized membrane plus bending, and total (primary plus secondary plus peak) stress distribution at the critical sections of the canister

shell for comparison with the stress limits defined in the ASME Code. Section stresses are determined using the stress linearization routine described in the ANSYS User's Theory Manual. For each section, the linearized stresses are determined at the innermost radial position of the section ("I"), the center of the section ("C"), and the outermost radial position of the section ("O"). For consistency, the "I" and "O" nodes are defined on the inside and outside surfaces of the canister shell.

For the canister shell assembly structural evaluations performed using the axisymmetric finite element model described in Section 3.9.3.1, a total of 36 locations are evaluated. The canister shell stress evaluation locations in the top and bottom regions and the cavity region of the axisymmetric model are shown in Figure 3.9-1 and Figure 3.9-2. The stress evaluation locations selected include all of the regions of the canister shell in which the highest stresses occur. Stress evaluation sections are provided at the center and edge of each end plate, as well as at intermediate locations. Stress evaluation sections are also provided in the shell cavity region and in the shell end regions at the junction of the end plates. The stresses in all canister shell partial penetration welds are also evaluated using the finite element analysis results. The top outer closure weld, which is discretely modeled, is evaluated using section stresses as described above. All other canister shell partial penetration weld connections are modeled by coupling the nodes of the connected components at the location of the weld. For these welds, the weld shear stress and membrane stress intensity are calculated based on the nodal forces from the finite elements solution. The weld shear stress is calculated as the resultant nodal force divided by the minimum effective weld throat and the primary membrane stress intensity is equal to twice the shear stress.

For the canister shell structural evaluation performed using the three-dimensional half-symmetry model described in Section 3.9.3.2, the linearized stresses are evaluated at all locations on the lower half of the shell. The shear stress and membrane stress intensity in the inner closure weld, which is modeled as a pinned connection between the inner closure plate and cylindrical shell, are calculated using the nodal forces, as described above.

3.9.2.2 Canister Shell Stress Classification

The stresses in the canister shell confinement components are classified in accordance with Article NB-3217 and Table NB-3217-1 of Subsection NB of the ASME Code. In general, the linearized membrane stress intensity at each section of the canister shell due to internal pressure and mechanical loads is classified as primary membrane (P_m). The linearized membrane plus bending stress intensity at each canister shell section due to internal pressure and mechanical loads is either classified as primary membrane plus bending (P_m+P_b) or primary plus secondary (P_m+P_b+Q), depending on the location of the stress. The canister shell general thermal stresses due to thermal loading are classified as secondary since these stresses are self-limiting. General thermal stress intensity is taken as the linearized membrane plus bending stress intensity at each section, neglecting peak stress intensity.

As discussed above, the membrane plus bending stress intensity due to internal pressure and mechanical loads is classified as primary plus secondary for certain locations within the canister shell assembly. Specifically, the bending stress at the junction of the shell and head (i.e., end plates) is classified as secondary if the moment restraint provided at the edge of the end plate is not required to maintain the bending stresses in the middle of the plate to acceptable limits (i.e., allowable P_m+P_b stress intensity). This criteria is used for classification of the bending stresses in

the top outer closure welds. In order to demonstrate that these stresses can be classified as secondary, the top outer closure plate is evaluated as a simply supported circular plate using hand calculations for all internal pressure and mechanical loads and associated load combinations which produce significant bending stress in the top outer closure plate. The bending stresses in the top outer closure plate are either calculated assuming a uniform pressure load or an annular line load, or both, using the formulas from Table 24 of Roark[31] (cases 9a and 10a). Table 3.9-6 provides a summary of the applied loads, calculated bending stresses, allowable primary plus bending stress intensities, and the associated design margins for each applicable load condition and load combination. The results demonstrate that the moment restraint provided by the top outer closure weld is not required to maintain the bending stresses in the top outer closure plate within primary limits. Therefore, the bending stress in the top outer closure weld is classified as secondary.

3.9.2.3 Spacer Plate Stress Evaluation Locations

The W21 spacer plates are evaluated using the finite element models described in Section 3.9.3.3. The section stresses at all critical spacer plate locations are evaluated for each loading condition. A total of 104 stress sections are considered for the full spacer plate model, as shown in Figure 3.9-3. In general, the section stresses are evaluated at each end of the spacer plate ligaments and at the thinnest ligaments located along the outside edge of the spacer plate.

Section stresses are used to determine the average membrane, linearized membrane plus bending, and total (primary plus secondary plus peak) stress distribution across each section for comparison with the stress limits defined in the ASME Code. Section stresses are determined using the stress linearization routine described in the ANSYS User's Theory Manual. For each section, the linearized stresses are determined at the innermost radial position of the section ("I"), the center of the section ("C"), and the outermost radial position of the section ("O"). For analyses that use shell elements, linearizations are determined at each section on the top ("T"), middle ("M"), and bottom ("B") surfaces of the elements. The membrane stresses are evaluated only at the middle fiber, since the top and bottom fiber membrane stress results include the out-of-plane bending component. The membrane plus bending and total stresses are evaluated only at the top and bottom fibers since the maximum stresses at one of these locations will always be greater than or equal to the corresponding stresses at the middle fiber if any out-of-plane bending stresses exist.

3.9.3 Finite Element Model Descriptions

3.9.3.1 Canister Shell Axisymmetric Finite Element Models

Two different axisymmetric finite element models are used for the structural evaluation of all W21 canister shell designs. The first model, referred to as the "bounding" canister shell axisymmetric model, is used to provide a bounding analysis of all W21 canister shells with the exception of the W21T-LL canister shell. The second model is used only for the analysis of the W21T-LL canister shell assembly. The finite element mesh of the bounding axisymmetric finite

[31] Roark, R.J., and Young, W.C., *Roark's Formulas of Stress and Strain*, Sixth Edition, McGraw-Hill Book Company, 1989.

element model is shown in Figure 3.9-4. The finite element mesh of the W21T-LL canister shell assembly is similar to that of the bounding canister shell axisymmetric model. The load conditions evaluated using the axisymmetric models include normal thermal, internal pressure, vertical deadweight, vertical canister transfer, normal and off-normal horizontal canister transfer (excluding horizontal dead weight), storage cask bottom end drop, and all associated load combinations.

As discussed above, the bounding canister shell axisymmetric model is developed to provide bounding stress results for all W21 canister shell assembly designs, with the exception of the W21T-LL canister shell assembly. The W21T-LL canister shell is treated separately from the other W21 canister shell assemblies since different material and thinner plate is used for the W21T-LL canister shell bottom end plate. The basic geometries of all other W21 canister shell assemblies are similar, with the exception of the top and bottom shield plug assemblies. The bounding axisymmetric model is based on the longest canister shell design and includes lead top and bottom shield plugs with bounding weights. The lead shielded canister configuration is used for the bounding axisymmetric model since lead has the lowest elastic modulus and, thus, the lowest stiffness. The top end region geometry is based on the W21T-SL canister shell assembly. The bottom end region geometry is similar to the W21T-SL design, but conservatively includes a 3.375-inch thick bottom lead shield plug versus 3.125-inches of lead used for the W21T-SL canister shell.

The W21 shell assembly axisymmetric models are comprised primarily of 2-D structural solid (PLANE42) elements. These elements, which are used to model the bottom end plate, bottom shield plug, bottom end closure, bottom end shell extension, cylindrical shell, top shield plug support ring, top shield plug, top inner closure plate, and top outer closure plate, are defined by four nodes, with two translational degrees of freedom (UX and UY) per node. The top outer closure weld modeled discretely using PLANE42 elements with the minimum acceptable weld throat. All other canister shell partial penetration welds are modeled by coupling the degrees of freedom (radial and axial) at the coincident nodes of the connected parts. The resulting nodal forces at the coupled locations are used to compute the weld shear stresses and stress intensities for the weld stress evaluation.

Non-linear 2-D point to point contact (CONTAC12) elements are used to model the interface between adjacent surfaces which may maintain or break physical contact, including the top closure plates and top shield plug, and the bottom end plates and bottom shield plug. In addition, contact elements are used to model the non-linear interface conditions between the outer surface of the bottom end plate and the supporting storage cask or transfer cask surface which is represented by ground nodes. The contact elements transfer only compressive loads normal to the contact surface and have no stiffness in tension. The contact surfaces between the cover plates and shield plugs are modeled using CONTAC12 elements with a contact stiffness of 1E7 lb/in. The contact surfaces between the outer end plate and the supporting structure is modeled using CONTAC12 with a contact stiffness of 1E8 lb/in. The initial gap size and orientation angle are defined by real constants. All gaps are assumed to be initially closed and not sliding. Gap friction is conservatively ignored.

Material Properties

The temperature dependent material properties of the W21T shell assembly Type 304 stainless steel material provided in Section 3.3.1 are used for all thermal load conditions and load

combinations including thermal. These properties are used since the W21T shell Type 304 stainless steel material has lower allowable stresses than the W21M Type 316 stainless steel and, therefore, is the limiting design despite the slightly lower coefficient of thermal expansion values. For all other load conditions, material properties corresponding to a temperature of 300°F are used.

As discussed above, the material properties of the lead shield plugs in both canister shell axisymmetric models are adjusted to give the lead shield plugs essentially no bending stiffness. This is accomplished by reducing the elastic modulus values of EX and EZ by two orders of magnitude (i.e., $2x10^4$ psi) as compared with EY ($2x10^6$ psi). For the W21T-LL canister shell axisymmetric model, the lead material is modeled with a weight density of 0.410 lb/in^3. For the bounding axisymmetric model, adjusted weight densities of 0.424 lb/in^3 and 0.570 lb/in^3 are conservatively used for the top and bottom shield plug lead materials, respectively, such that the total modeled weight of the top and bottom shield plug assemblies are bounding for all W21 canister shell designs.

Boundary Conditions and Loading

The specific model boundary conditions and loading used for each structural evaluation are described in the respective sections of this FSAR.

3.9.3.2 Canister Shell Half-Symmetry Finite Element Models

The W21 canister shell assembly stresses due to loads which act transverse to the canister longitudinal axis, such as horizontal deadweight, storage cask tip-over, and transfer cask side drop loads, are evaluated using the three-dimensional half-symmetry finite element model shown in Figure 3.9-5 through Figure 3.9-7. The stresses in the top end region are expected to bound those in the bottom end region since the top shield plug is heavier than the bottom shield plug. Also, the bottom shield plug is sandwiched between the bottom closure plate and the bottom end plate, and the upper shield plug is bordered on one side by the support ring. The model represents the top region of the W21M-LS canister shell and basket assembly. The W21M-LS canister is selected as the bounding design since it has the largest overall combined weight for the basket assembly and fuel and the heaviest top shield plug. The top eleven spacer plates of the W21M-LS basket assembly are included in the model, with the two top end ¾-inch thick plates modeled as a single 1.5-inch thick plate, as shown in Figure 3.9-5.

The W21M-LS canister shell three-dimensional half-symmetry model includes the canister shell, top inner and outer closure plates and welds, top shield plug, and the basket assembly spacer plates. The canister shell assembly top inner and outer closure plates, top shield plug, and cylindrical shell are modeled using brick elements (SOLID45), as shown in Figure 3.9-6. The top outer closure weld is modeled discretely. The top inner closure partial penetration weld is modeled as a pinned connection, since this weld is not designed as a moment connection. The stresses in the top inner and outer closure welds are evaluated in the same manner as described for the canister shell axisymmetric finite element model.

The basket assembly spacer plates are modeled using elastic shell elements (SHELL63). Since the spacer plates are included in this model only for the purpose of accurately modeling their loads on the canister shell, a coarse mesh is used for the spacer plates, as shown in Figure 3.9-7.

The spacer plate mesh in the bottom region is adjusted to align the nodes radially with the corresponding nodes on the canister shell.

Radial gap elements are placed between the basket assembly spacer plates and inside of the canister shell and between the top shield plug and the inside of the canister shell to model the non-linear interface between these components. The shield plug and spacer plate gap elements are modeled with initial radial gap sizes of 0.1875 inches and 0.175 inches, respectively. The gap element radial orientation is maintained throughout the analyses. The element status (open or closed) and the gap size for each gap element are continuously updated through an iterative solution. For each increment of loading applied to the model, the solution iterates until the convergence criteria has been satisfied (i.e., forces are balanced). At the end of each substep, each gap element size and status is updated based upon the locations of the gap elements end nodes. For gap elements which are open, there is no associated stiffness. The gap element contact stiffness is modeled as $1x10^7$ lb/inch. Friction at the gap interfaces is conservatively ignored.

For the evaluation of horizontal dead weight and storage cask tip-over loads, the outside of the canister shell is supported by two 4-inch wide cask rails, which run the entire length of the canister and are located at 22.5° on both sides of the canister bottom centerline. Radial gap elements are used to model the interface between the outside of the canister shell and the rail supports. These gap elements are modeled without friction, initially closed, with a contact stiffness of $1x10^7$ lb/inch.

For the transfer cask side drop evaluation, the canister assembly is supported by the transfer cask inner shell (i.e., cylinder within a cylinder). For this condition, radial gap elements are used to model the non-linear interface between the outside of the canister shell and the inside of the transfer cask inner shell. These gap elements are similar to those used between the spacer plates and canister shell, but have an initial radial gap size of 0.5 inches and a contact stiffness of $1x10^8$ lb/inch.

Boundary Conditions

The global Z coordinate system goes from the bottom end to the top end. The half model is represented from the top (0° azimuth) to the bottom (180° azimuth). Along the half symmetry plane, the nodes are restrained from translating along the X-axis, and rotating about Y-axis and Z-axis. Another plane of symmetry is located on the bottom end of the model, near the last spacer plate. The canister shell nodes at this location are restrained from translating along the Z-axis and rotating about X-axis (radial) and Y-axis (circumferential).

For the horizontal dead weight and storage cask tip-over analysis, the cask support rail gap element ground nodes are restrained in all degrees of freedom. Similarly, for the transfer cask side drop analysis, the gap element ground nodes are fixed.

To maintain model stability for the spacer plate, the top and bottom nodes of the spacer plates are restrained from translation in the Z direction.

Material Properties

The canister shell, top outer closure plate and weld, the inner closure plate, and the spacer plates are modeled with an elastic modulus of $27.0x10^6$ lb/in^2, a density of 0.29 lb/in^3, and a Poisson's

ratio of 0.29. The carbon steel plug is modeled with an elastic modulus of 27.0×10^6 lb/in^2, a density of 0.284 lb/in^3, and a Poisson's ratio of 0.29.

Applied Loading

The inertial loads of the canister shell, top outer and inner closure plates, the shield plug, and the self weight of the spacer plates are accounted for by applying an appropriate acceleration in the direction of the loading. The inertial loads of the fuel assembly and the guide tube are applied as uniform pressure loads over the width of the supporting spacer plate ligaments, as shown in Figure 3.9-7. The ligament pressure loads are scaled using the appropriate acceleration applicable in the selected loading condition.

For the canister shell load combination evaluation, the transverse canister loads are applied in combination with the canister off-normal internal pressure load of 16 psig is applied as a uniform pressure load on surfaces of interest: 1) For inner boundary pressure, the uniform pressure is applied on the inside surface of the bottom closure plate and canister shell (up to the top inner closure weld), and on the inside faces of the inner closure plate. 2) For outer boundary pressure, the uniform pressure is applied on the inside surface of the bottom closure plate and canister shell (up to the top outer closure weld), and on the inside surface of the outer closure plate.

3.9.3.3 Spacer Plate Models

3.9.3.3.1 Spacer Plate Plane Stress Model

The structural analysis of the W21 spacer plates for normal thermal loads, storage cask tip-over loads, transfer cask side drop loads is performed using the two-dimensional plane-stress finite element model shown in Figure 3.9-8. The W21 spacer plate plane-stress finite element model includes plane-stress elements, gap elements, and spring elements. The spacer plate is modeled using PLANE42 elements (4-node quadrilateral) with the spacer plate thickness input as a real constant. The thickness of the W21 carbon steel and stainless steel plane stress elements are specified as 0.75 inches and 2.00 inches, respectively.

The non-linear spacer plate support provided by the canister shell is modeled using 3-D gap elements (CONTAC52). The gap elements are modeled with an initial nominal 0.1875-inch radial gap size around the entire perimeter of the spacer plate. The gap element radial orientation is maintained throughout the analyses. The element status (open or closed) and the gap size for each gap element are continuously updated through an iterative solution. For each increment of loading applied to the model, the solution iterates until the convergence criteria have been satisfied (i.e., the force are balanced). At the end of each substep, each gap element size and status is updated based upon the locations of the gap element end nodes. For gap elements which are open, there is no associated stiffness. The gap element contact stiffness is modeled as $9(10)^5$ pounds per inch, based on the compliance of the canister shell. Friction between the spacer plate and the canister shell is conservatively ignored in the gap elements.

Boundary Conditions

The "ground" nodes of each gap and spring element are restrained in all directions. Additionally, to prevent rigid body rotation of the model, the node on the model edge at the impact location for the corresponding impact angle is restrained in the "theta" direction.

Material Properties

The W21 carbon steel and stainless steel spacer plates are modeled with the material properties of SA-517, Grade P[32] carbon steel and SA-240, Type XM-19 stainless steel, respectively. The material properties at the spacer plate design temperature of 700°F are used. The weight density and Poisson's ratio are taken as 0.283 lb/in^3 and 0.3 for carbon steel and 0.290 lb/in^3 and 0.29 for stainless steel.

Loading

For inertial load conditions, the spacer plate loading consists of its own inertial load, the inertial load of the fuel assemblies and guide tube assemblies, and the inertial load of the support rod assemblies. The spacer plate's own inertial load is accounted for by applying an acceleration in the direction of loading. The inertial loads from the support rod assemblies (i.e., support rod segments and support sleeves) are modeled as concentrated forces applied to the spacer plate nodes located at the support rod centerline locations. The support rod assembly inertial loads in the global X and Y directions are calculated as follows:

$$P_{RX} = (W_R + W_S)(G \times \sin\theta)$$

$$P_{RY} = (W_R + W_S)(G \times \cos\theta)$$

where W_R and W_S are the weights of the support rod segment and support sleeves tributary to the most heavily loaded spacer plate, G is the equivalent static acceleration load, and θ is the angle of impact relative to the orientation in which the package is transported (i.e., 0° corresponds to an impact on the bottom of the spacer plate along the vertical centerline).

The inertial load of the fuel assemblies and guide tube assemblies are modeled as uniform pressure loads over the width of the supporting spacer plate ligaments. The pressure load on each of the supporting ligaments in the global X and Y directions due to an applied acceleration G is determined as follows:

$$q_X = (w_F + w_{GT})(b)(G \times \sin\theta)/A_{ligament}$$

$$q_Y = (w_F + w_{GT})(b)(G \times \cos\theta)/A_{ligament}$$

where:

w_F = SNF assembly line load per Table 3.9-1.

w_{GT} = 1.19 lb/in., Guide tube assembly line load.
= (0.29)[4(8.95+0.075)(0.075) + 4(9.28-0.015)(0.015)] + (0.10)(4)(8.40)(0.075)

[32] The carbon steel spacer plates are fabricated from either SA-517, Grades F or P or A514, Grades F or P carbon steel. The material properties used in the finite element model (i.e., E, ν, and density) are identical for all of these carbon steels. Therefore, the results of the finite element analysis are valid for all W21 carbon steel spacer plate material alternatives.

b = Spacer plate tributary length.

G = Equivalent static acceleration load

θ = Angle of impact (see Figure 3.7-5)

$A_{ligament}$ = Spacer plate ligament surface area over which the pressure load is applied
= (9.43 - 0.50)(0.75) = 6.70 in^2 (¾-inch thick plate)
= (9.43 - 0.50)(2.00) = 17.86 in^2 (2-inch thick plate)

3.9.3.3.2 Spacer Plate Shell Finite Element Model

The spacer plate is evaluated for the vertical dead weight loading conditions for which out-of-plane bending response of the spacer plate is important using a finite element model that has bending capability in the longitudinal direction. The spacer plate model element mesh is identical to that shown in Figure 3.9-8. The spacer plate is modeled using 4-node structural shell elements (SHELL63) having three translational (UX, UY, UZ) and three rotational degrees of freedom (ROTX, ROTY, ROTZ) per node. The model also includes torsional spring elements at the location of each support rod to represent the spacer plate bending support provided by the support rod assemblies.

Boundary Conditions

The spacer plate is supported in the longitudinal direction by the support rod assemblies. Torsional spring elements are attached to the spacer plate at the nodes nearest support rod centerline locations to model the bending restraint provided by the support rod assemblies. The lower bound bending stiffness provided by the W21M and W21T support rods at the Type A spacer plate (i.e., 2-inch thick stainless steel plate or two ¾-inch thick carbon steel plates) is calculated as follows:

$$M_R = \frac{12E_R I_R}{L_R} = 2.48(10)^7 \text{ in-lb/radian}$$

where:

E_R = $25.3(10)^6$ psi, lower bound support rod Type XM-19 stainless steel elastic modulus at 600°F.

I_R = 3.98 in^4, support rod moment of inertia.

L_R = 48.7 inches, largest tributary length of any Type A spacer plate

The lower bound bending stiffness provided by the W21M and W21T support sleeves at the Type B spacer plates (i.e., ¾-inch thick carbon steel plate) is calculated as follows:

$$M_S = \frac{12E_S I_S}{L_S} = 1.71(10)^8 \text{ in-lb/radian}$$

where:

E_S = $25.3(10)^6$ psi, lower bound support sleeve Type 304L stainless steel elastic modulus at 600°F.

I_S = 3.02 in^4, support sleeve moment of inertia.

L_S = 5.35 inches, largest tributary length for any carbon steel Type B spacer plate

A lower bound support rod bending stiffness of $1.0(10)^7$ in-lb/radian is conservatively used for the carbon steel and stainless steel spacer plate models. This condition results in the highest bending stresses at the center of the spacer plate. In addition, fixed rotation supports are also considered for the spacer plate vertical dead weight and end drop evaluations, in order to determine the bounding spacer plate reactions at the support rods for use in the support rod structural evaluations.

Material Properties

The material properties used for the W21 spacer plate shell model are identical to those used for the W21 spacer plate plane-stress model described in Section 3.9.3.3.1.

Loading

For vertical dead weight loading, the W21 spacer plates support only their own weight, with the exception of the bottom end spacer plate which also supports the entire weight of the 21 guide tube assemblies. A longitudinal acceleration is applied to the model to account for the spacer plate self-weight. For the bottom end spacer plate analysis, the weight of the guide tube assemblies is applied to the bottom end spacer plate as concentrated nodal forces at the locations of the guide tube attachment brackets.

3.9.3.3.3 Spacer Plate ½-Symmetry Multi-Span Plane Stress Model

The W21 carbon steel and stainless steel spacer plates horizontal dead weight elastic stress analysis and storage cask tip-over plastic stress analysis are performed using the ½-symmetry multi-span plane stress finite element model shown in Figure 3.9-9. The W21 spacer plate ½-symmetry multi-span plane-stress finite element model includes three spacer plates; the center spacer plate over which the fuel grid spacers are assumed to be positioned, and the adjacent spacer plates on either side. The version of this model used for the evaluation of the carbon steel spacer plates includes three ¾-inch thick plates with a uniform longitudinal pitch of 5.00 inches. Similarly, the version of this model used for the evaluation of the stainless steel spacer plates includes one 2-inch thick stainless steel plate in the center and a ¾-inch thick carbon steel spacer plate at 5.475 inches away on either side. Both of these models are based on the W21M-SD basket assembly which supports the highest fuel grid spacer loading, as discussed in Section 3.9.1. The spacer plates are modeled using PLANE42 plane stress elements (4-node quadrilateral) with the spacer plate thickness input as a real constant.

The W21 guide tubes are also included in the ½-symmetry multi-span plane-stress finite element model. The guide tubes models span the three spacer plates and extend to the mid-span outside of the end spacer plates. The W21 guide tubes are modeled using elastic shell elements (SHELL63) for the horizontal dead weight analysis and plastic shell elements (SHELL43) for the storage cask tip-over analysis. The guide tubes are modeled with a 0.075-inch thickness,

conservatively neglecting the structural capacity of the guide tube neutron absorber sheets and wrapper. However, an adjusted weight density of 0.44 lb/in^3 is used for the guide tube material to account for the weight of the guide tube neutron absorber sheets and wrapper. Two-dimensional node-to-node gap elements (CONTAC12) are included between the bottom of the guide tubes and the supporting spacer plate ligaments. The normal contact stiffness of 1x10^5 lb/inch is used for these gap elements. In addition, soft spring elements (COMBIN14) are placed between the guide tubes and the center spacer plate for numerical stability. The stiffness of the soft springs is specified as 100 lb/inch, such that their presence has no significant effect on the accuracy of the solution.

Boundary Conditions

For the horizontal dead weight and storage cask tip-over conditions, the spacer plates are supported along their bottom edge by the canister shell which is supported by the storage cask or transfer cask rails. Both the storage cask and transfer cask use two full length rails to support the canister. The cask rails are 4.0 inches wide and separated by 45° (i.e., 22.5° on both sides of the spacer plate bottom center). The support provided by the canister shell is conservatively neglected and the spacer plates are restrained radially (UX in cylindrical coordinate system) at the locations of the cask rails, as shown in Figure 3.9-10.

Material Properties

The W21 carbon steel and stainless steel spacer plates are modeled using the material properties of SA-517, Grades P and F[33] carbon steel and SA-240, Type XM-19 stainless steel respectively. The W21 guide tubes are modeled using SA-240, Type 316 stainless steel material properties. Uniform material properties at a bounding design temperature of 700°F are used. The horizontal dead weight stress analysis is performed using linear-elastic material properties. For the storage cask tip-over plastic stress analysis, bi-linear kinematic hardening with a 0.1% tangent modulus is assumed for all materials. The weight density and Poisson's ratio are taken as 0.283 lb/in^3 and 0.3 for carbon steel and 0.290 lb/in^3 and 0.29 for stainless steel.

Loading

The model loading includes the self-weight of the spacer plates and guide tubes, in addition to the loads from the weight of the support rods and fuel assemblies. Since the spacer plates and guide tubes are discretely modeled, an acceleration load is applied to the model to account for the load due to their self-weight. The inertial loads due to the support rods and support sleeves are applied as concentrated nodal forces to the spacer plate nodes at the locations of the support rod centerlines. The support rod loads for a given acceleration (G) are calculated based upon the spacer plate tributary lengths

For the horizontal dead weight elastic stress analyses and storage cask tip-over plastic stress analyses, the fuel load is conservatively applied as a concentrated load at the location of the fuel grid spacers. The fuel grid spacer load per unit acceleration (G) is applied as nodal forces to the guide tube bottom panel directly above the center spacer plate in the finite element model.

[33] The carbon steel spacer plates are fabricated from either SA-517, Grades P or F or A514, Grades P or F carbon steel. The material properties used in the finite element model (i.e., E, ν, and density) are identical for all of these carbon steels. Therefore, the results of the finite element analysis are valid for all W21 carbon steel spacer plate material alternatives.

The inertial loads due to the support rods and support sleeves are applied as concentrated nodal forces to the spacer plate nodes at the locations of the support rod centerlines, as shown in Figure 3.9-10. The support rod loads for a given acceleration (*G*) are calculated based upon the spacer plate tributary lengths, as described previously for the W21 plane stress finite element model. For the W21 carbon steel spacer plate model, all three spacer plates have a tributary length of 5.00 inches and an applied load of 11.5x*G* pounds per support rod assembly (i.e., support rod segment and support sleeves) for each spacer plate. For the W21 stainless steel spacer plate model, the stainless steel plate has a tributary length of 5.475 inches and an applied load of 9.4x*G* pounds per support rods assembly. Similarly, the carbon steel spacer plates adjacent to the stainless steel spacer plate have a tributary length of 5.238 inches and applied loads of 12.1x*G* pounds per support rod assembly. For the support rods located on the ½-symmetry plane, the applied loads are equal to ½ of those above.

For the horizontal dead weight elastic stress analyses and storage cask tip-over plastic stress analyses, the fuel load is conservatively applied as a concentrated load at the location of the fuel grid spacers. The fuel grid spacer load per unit acceleration (*G*) is applied as nodal forces to the guide tube bottom panel directly above the center spacer plate in the finite element model. As discussed in Section 3.9.1, the maximum fuel grid spacer tributary weight is 256.9 pounds. Each guide tube includes 10 equally sized elements over the width of the fuel grid spacer. Therefore, $1/10^{th}$ of the grid spacer tributary load (25.7x*G* pounds) is distributed to each of the guide tube interior nodes over the width of the fuel grid spacer and $1/20^{th}$ of the grid spacer tributary load (12.8x*G* pounds) is applied to the guide tube nodes at the edge of the grid spacer and those located on the ½-symmetry plane, as shown in Figure 3.9-11.

3.9.3.3.4 Spacer Plate Full Multi-Span Plane Stress Model

The W21 carbon steel and stainless steel spacer plate transfer cask side drop plastic stress analyses are performed using the full multi-span plane stress finite element model shown in Figure 3.9-12. The W21 full spacer plate multi-span finite element model is similar to the ½-symmetry multi-span finite element model described in the previous discussion. The spacer plate and guide tube mesh is generated by symmetry reflection of the ½-symmetry model mesh. The model includes two-dimensional node-to-node gap elements (CONTAC12) are included between the bottom and side of the guide tubes and the supporting spacer plate ligaments, in order to provide the proper the guide tube to spacer plate interface for all side drop orientations considered. The normal contact stiffness of $1x10^5$ lb/inch is used for these gap elements. In addition, 3-D node-to-node gap elements (CONTAC52) are included around the perimeter of each spacer plate for the transfer cask side drop condition to model the non-linear support provided by the canister shell. The gap elements are identical to those used for the W21 spacer plate plane stress finite element model described in Section 3.9.3.3.1. Soft spring elements (COMBIN14) are placed between the guide tubes and the center spacer plate for numerical stability. Soft springs are also placed on the perimeter of each spacer plate at locations of 0°, -45°, and -90° in the global cylindrical coordinate system (CSYS=1) for added numerical stability. The stiffness of the soft springs is specified as 100 lb/inch, such that their presence has no significant effect on the accuracy of the solution.

Boundary Conditions

The "ground" nodes of each spacer plate perimeter gap element are restrained in all directions. Additionally, to prevent rigid body rotation of the model, the node on the model edge at the impact location for the corresponding impact angle is restrained in the "theta" direction. Symmetry boundary conditions (i.e., UZ=ROTX=ROTY=0) are also applied to the nodes on the end planes of the guide tubes.

Material Properties

The W21 carbon steel and stainless steel spacer plates are modeled using the material properties of SA-517, Grades F or P and A514, Grade F or P[34] carbon steel and SA-240, Type XM-19 stainless steel, respectively. The W21 guide tubes are modeled using SA-240, Type 316 stainless steel material properties. Bi-linear kinematic hardening with a 0.1% tangent modulus is assumed for all materials. For the side drop load conditions without thermal loading, uniform material properties at a bounding design temperature of 700°F are used. For the combined side drop plus thermal loading, temperature dependent material properties are used. The weight density and Poisson's ratio are taken as 0.283 lb/in^3 and 0.3 for carbon steel and 0.290 lb/in^3 and 0.29 for stainless steel.

Loading

The model loading includes the self-weight of the spacer plates and guide tubes, in addition to the loads from the weight of the support rods and fuel assemblies. The loads are applied to the full spacer plate multi-span model in the same manner as the loading for the ½-symmetry spacer plate multi-span model with the following modifications. For the transfer cask side drop plastic stress analyses, impact angles of 0° and 45° are evaluated. For the 0° impact angle, the spacer plate loads are calculated in the same manner as those described for the ½-symmetry multi-span model. However, for the 45° impact angle, the calculated loads for the support rod assemblies and fuel assemblies are multiplied by the sine and cosine of the angle to obtain the loads acting along the X-axis and Y-axis, respectively. For the fuel loads, the X-direction loads are applied to the guide tube side panels which are supported by the spacer plate vertical ligaments and the Y-direction loads are applied to the guide tube bottom panels which are supported by the spacer plate horizontal ligaments. The spacer plate loads for the 0° and 45° side drop orientations are shown in Figure 3.9-13 and Figure 3.9-14, respectively.

3.9.3.3.5 Full Spacer Plate Multi-Span Shell Model

The full spacer plate multi-span shell model shown in Figure 3.9-15 is used for the storage cask tip-over and transfer cask side drop plastic large deflection bucking analyses of the W21 carbon steel and stainless steel spacer plates. The basic geometry of this model is similar to that of the full spacer plate multi-span plane stress model.

[34] The carbon steel spacer plates are fabricated from either SA-517, Grades F or P or A514, Grades F or P carbon steel. The material properties of A514, Grade F and P are used in the finite element model (i.e., E, ν, and density). These carbon steels have lower strength properties than SA-517, Grades F and P. Therefore, the permanent deformation results of the W21 carbon steel spacer plate finite element analyses are bounding for all W21 carbon steel spacer plate material alternatives.

The basic geometry of the multi-span shell model is similar to that of the full spacer plate multi-span plane stress model, but utilizes plastic shell elements (SHELL43) for the spacer plates to permit longitudinal deflections. A coarser mesh density is also used in the model. Since this model is used only for buckling analyses in which displacements are of interest rather than stresses, the mesh density is sufficient to accurately predict the overall response of the spacer plates for the tip-over and side drop conditions. Torsional spring elements are attached to each spacer plate at the support rod locations to represent the rotational support provided by the support rod assemblies.

Boundary Conditions

In general, the model boundary conditions for the storage cask tip-over and transfer cask side drop plastic large deflection buckling analyses are the same as those used for the plastic stress analyses described previously. In addition, each spacer plate is restrained longitudinally at the nodes located at the support rod centerlines. As discussed above, torsional spring elements are attached to the support rod centerline nodes. The spring ground nodes are restrained in all DOF.

Material Properties

The material properties used in the full multi-span shell model are identical to those described in Section 3.9.3.3.4.

Loading

The finite element model in-plane tip-over and side drop loads are applied in the same manner as described in the ½-symmetry and full multi-span plane stress models, with appropriate adjustments made to account for differences in mesh density. Buckling evaluations are performed for the tip-over and side drop loads both with and without the bounding normal thermal gradients superimposed. For those conditions including thermal, the thermal gradient is applied to the model as an initial condition and held constant for the remainder of the analysis. A constant 10*g* longitudinal acceleration is also applied to the models as an initial condition for the buckling evaluations to introduce an initial eccentricity in the spacer plates. For the buckling evaluations, the model in-plane impact loads are continually ramped up until the solution no longer converges or the loads are at least twice the design loads.

3.9.3.4 Guide Tube Models

3.9.3.4.1 Guide Tube ½-Symmetry Single Span Model

The W21M and W21T guide tube assemblies are evaluated for transverse loads using the half-symmetry periodic model shown in Figure 3.9-16. The model represents a segment of the guide tube spanning from the centerline of a spacer plate to the mid-span between the adjacent spacer plate support, taking advantage of longitudinal symmetry. The guide tube is modeled with plastic shell elements (SHELL43) having three translational (UX, UY, UZ) and three rotational degrees of freedom (ROTX, ROTY, ROTZ) at each node. The shell elements include both membrane and bending stiffness, and have both stress stiffening and large deflection capabilities.

The guide tube assembly model includes only the guide tube for structural support, conservatively neglecting the structural contributions of the neutron absorber panels and the stainless steel wrapper. The load on the guide tube due to the neutron absorber panels and the

stainless steel wrapper is accounted for by adjusting the weight density of the guide tube to 0.44 lb/in^3.

The guide tube load from the fuel assembly is applied as a uniform pressure load to the guide tube panel that supports the fuel. The uniform pressure load q_F due to an equivalent static acceleration G is determined as follows:

$$q_F = \left(\frac{W_F}{L_F b_{GT}} \right) G$$

where W_F is the weight of the fuel assembly, L_F is the length of the fuel assembly, and the width of the guide tube panel in the model, b_{GT} = 9.025 inch.

The model includes symmetry boundary constraints along the half-symmetry plane and along the vertical plane passing through the nodes located at the spacer plate support and mid-span. The guide tube nodes at the spacer plate ligament support location are restrained from vertical translation.

3.9.3.4.2 Guide Tube ½ Symmetry Multi-Span Model

The FuelSolutions™ W21 guide tube assembly is evaluated for transverse loads resulting from the normal and accident conditions using the half-symmetry multi-span finite element model shown in Figure 3.9-17. This model is used for the evaluation of non-uniform fuel loading assumptions (i.e., fuel weight applied at the fuel assembly grid spacer locations).

The guide tube is modeled with elastic shell elements (SHELL63) for normal conditions and with plastic shell elements (SHELL43) for accident conditions. Both element types have three translational (UX, UY, UZ) and three rotational degrees of freedom (ROTX, ROTY, ROTZ) at each node. The shell elements include both membrane and bending stiffness and have both stress stiffening and large deflection capabilities. The guide tube assembly models include only the guide tube for structural support, conservatively neglecting the structural contributions of the neutron absorber panels and stainless steel wrapper. The load on the guide tube due to the neutron absorber panels and wrapper is accounted for by adjusting the weight density as 0.44 lb/in^3.

Gap elements (CONTAC52) elements are included in the model at the locations of the spacer plate ligament supports. Each 3-D point-to-point gap element is connected on one end to a single guide tube node and on the other end to ground (i.e., node restrained in all DOF). The gap elements are modeled with a normal stiffness of 1x10^5 pounds/inch and zero sliding stiffness. The specified gap normal stiffness is much higher than the stiffness of the guide tube panel, thereby avoiding errors in the solution caused by excessive gap interference. The initial gap status is specified as closed and not sliding.

The SNF assembly normal condition dead weight load is applied as a uniform pressure over the area of the guide tube bottom panel which supports the SNF assembly grid spacer. The depth of the WE 15x15 in-core grid spacer varies from 1.50 inches for the standard design to 2.25 inches for the optimized fuel assembly. The smaller grid spacer depth will result in the highest guide tube stresses since the resulting pressure load is higher and the load is more concentrated at the

guide tube mid-span. Therefore, a bounding horizontal dead weight stress evaluation is performed for the 1.50-inch deep grid spacer.

For accident loading conditions, the fuel load is applied to the model at the mid-span of the largest guide tube span (i.e., midway between spacer plate supports) since this will result in the largest guide tube deformations for a given load. The applied loads include: 1) a 60*g* side drop acceleration applied to account for the guide tube self-weight, 2) a displacement imposed on the guide tube bottom panel nodes in the region of the grid spacer, and 3) a uniform pressure load applied to those spans which do not have the imposed displacement loading to account for the balance of the fuel weight not accounted for by the imposed displacement.

The magnitude of the imposed displacement is chosen based upon the maximum protrusion of the grid spacer beyond the fuel rod envelope (i.e., distance from edge of grid spacer to outermost fuel rod), recognizing that the displacement of the guide tube is limited by this fuel parameter. The maximum grid spacer protrusion has been calculated for each PWR fuel class. The results show that the maximum grid spacer protrusion is 0.081 inches for the Haddam Neck fuel (which is not being qualified for storage, but nonetheless provides the maximum grid strap protrusion). For conservatism, a bounding 0.10-inch displacement is imposed onto the guide tube bottom panel in the area of the grid spacer support.

3.9.4 Fabrication Stresses

The fabrication of the W21M and W21T basket assemblies requires that a torque of 150 ± 25 ft-lbs be applied to the support rod segments to ensure stability and to prevent the loosening over time. The torque preloads the threads in shear. Per equation 8-16 of Shigley,[35] the approximate relationship between torque and preload is:

$$T = 0.20F_i d$$

where:

T = applied torque
F_i = preload
d = major diameter of the threads

Therefore, the approximate force generated by the maximum applied torque of 175 ft-lbs (2,100 in-lbs) is

$$F_i = (2{,}100 \text{ in-lbs}) / 0.20(2 \text{ in.}) = 5{,}250 \text{ lbs}$$

The rod thread shear stress due to tension is calculated as:

$$\tau = F_i / A_{thread}L_{thread} = (5{,}250 \text{ lbs}) / (3.456 \text{ in}^2\text{/in})(1.75 \text{ in.}) = 868 \text{ psi} = 0.9 \text{ ksi}$$

where:

A_{thread} = external thread shear area per unit length.

[35] Shigley, J. E., Mitchell, L. D., *Mechanical Engineering Design*, Fourth Edition, McGraw Hill Book Company, 1983.

L_{thread} = minimum length of thread.

The primary membrane stress intensity in the support rod threads due to the torque preload is equal to twice the shear stress, or 1.8 ksi. This stress is considered in combination with the support rod thread stresses due to other normal and accident load conditions in the basket assembly load combination evaluations presented in Sections 3.5.5.2 and 3.7.10.2.

3.9.5 Canister Closure Weld Critical Flaw Size Determination

The FuelSolutions™ W21 canister closure is described in Section 1.2.1.3 and shown in Figure 1.2-3 of this FSAR. The shell assembly (the canister shell, bottom closure plate, and the top inner and outer closure plates) is designed and fabricated as a Class 1 component pressure vessel in accordance with ASME B&PVC Section III, Subsection NB, to the maximum extent practicable as discussed in Section 2.1.2 of this FSAR. The principal exception is the top end inner and outer closure plate welds to the canister shell which do not meet the provisions of Subsection NB for volumetric examination but do provide redundant sealing of the canister's confinement boundary. As an alternative to the weld examination requirements of Subsection NB, guidance is taken from USNRC ISG-4.[36] In accordance with this criteria, the canister top end closure welds are partial penetration welds that are structurally qualified by analysis using the appropriate weld joint efficiency factor as described in this FSAR chapter, and are progressively ("multi-level") PT examined during canister closure operations in accordance with NB-5350 as defined on the drawings provided in Section 1.5.1 of this FSAR.

In order to assure that the canister closure weld examination requirements specified are adequate to detect a critical flaw, an elastic-plastic fracture mechanics (EPFM) analysis is performed in accordance with the requirements of ASME B&PVC Section XI to determine the critical flaw size for varying magnitudes of weld stress. As a result, the number/distribution of PT examination layers required to assure the absence of an unacceptable flaw size in this weld is determined.

Because not every weld layer is PT examined, there is a small potential that a flaw could extend around the entire circumference of the weld for the depth of the weld between PT examination layers. Though this scenario is highly unlikely, a conservative fracture mechanics model is used to bound any indication. The model selected is an infinitely long part through-wall surface flaw at the inside (root) or outside (top surface) of the weld. This model is conservative in application to the problem at hand because any flaw between the PT examination layers is a subsurface flaw which can be larger than a surface flaw and still meet the requirements of ASME B&PVC Section XI. For completeness, a second model is used to address through-wall flaws in the unlikely event that they are encountered. The EPFM unstable tearing formulation for these two crack models are widely used in the industry[37] and are based on the Ramberg-Osgood stress-strain law.

---

[36] ISG-4, *Cask Closure Weld Inspections*, Spent Fuel Project Office Interim Staff Guidance-4, United States Nuclear Regulatory Commission, Revision 1, May 21, 1999.

[37] Shih, C.F. et. al., *An Engineering Approach for Elastic-Plastic Fracture Analysis*, Electric Power Research Institute (EPRI) Topical Report No. NP-1931, July 1981.

The material properties for stainless steel welds used in the EPFM unstable tearing analysis including the J-R curves and stress–strain data are taken from the literature.[38] Representative and consistent properties for SMAW and GTAW (TIG) welds are used. Based on the analysis documented in Chapter 4 of this FSAR, the temperature of the canister top end outer closure weld is expected to be a maximum of 250°F and a minimum of –40°F. The stress-strain and J-R curve parameters for the GTAW and SMAW weld are determined for these two temperatures and conservatively used in this analysis.

For a linear indication along the circumference of the canister closure weld, the stress component that causes flaw/crack extension is the radial stress. The allowable flaw sizes are determined for a range of radial stress levels for both normal operating and accident conditions. Consistent with ASME B&PVC Section XI methodology, a safety factor of 3 is used for normal operating conditions and √2 is used for accident conditions to determine the allowable flaw size. In the EPFM unstable tearing analysis, the J-Integral/Tearing Modulus approach is used to determine the allowable flaw size. In doing so, the material J-R curve is translated into a material J-T curve with plots increasing load (at a given flaw size) or increasing flaw size (at a given load). The resulting applied load J-T curve vs. material J-T curve are then used to determine the predicted flaw size at instability. This value is then used to calculate the critical flaw size ratio. Since the stresses used in the analyses include the prescribed ASME BPVC Section XI safety factor, the resulting crack size is thus the acceptable flaw size for the weld.

The results of the EPFM unstable tearing analyses establish the following FuelSolutions™ top end outer closure weld allowable flaw sizes for upper-end radial stress conditions per ASME B&PVC Section XI requirements:

1. 360° long inner or outer surface flaws could have acceptable depths ranging from 0.19" to 0.49" and 0.10" to 0.47" in welds applied using either the GTAW or SMAW processes, respectively, for varying magnitudes of normal operating condition stress.
2. 360° long inner or outer surface flaws could have acceptable depths ranging from 0.27" to 0.56" and 0.19" to 0.47" in welds applied using either the GTAW or SMAW processes, respectively, for varying magnitudes of accident condition stress.
3. 100% through-wall flaws would have to be over 100" to 180" and over 40" to 180" in acceptable circumferential length in welds applied using either the GTAW or SMAW processes, respectively, for varying magnitudes of normal operating condition stress.
4. 100% through-wall flaws would have to be over 120" to 180" and over 78" to 180" in acceptable circumferential length in welds applied using either the GTAW or SMAW processes, respectively, for varying magnitudes of accident condition stress.

The following conservatisms are inherent to the acceptable flaw depths presented above:

1. Even though the PT examination of the root and cover layers assures that there are no surface flaws in the weld, the analytical models used to calculate the acceptable flaw depths assume the flaws are indeed surface flaws. As recognized by ASME BPVC Section XI, depending on the location of a subsurface flaw relative to the thickness of the

[38] Westinghouse Electric Corporation, *Toughness of Austenitic Stainless Steel Pipe Welds*, EPRI Report No. NP-4768, October 1986.

weld, the acceptable flaw size for a subsurface flaw can increase by as much as a factor of 2.

2. Even though PT examination of the root and cover layers assures that there are no 100% through-wall flaws, the analytical models used demonstrate the ability of the weld to sustain 100% through-wall flaws with significant lengths (> 90° of the circumferential weld length).

Based on the critical flaw size evaluation described above, it can also be concluded that:

1. For welds applied using the GTAW process, root, intermediate, and cover PT examinations adequately assure that there are no flaws that are unacceptable per ASME B&PVC Section XI requirements for nominal normal operating stress magnitudes of up to approximately 10 ksi and nominal accident condition stress magnitudes of up to approximately 22 ksi.
2. For welds applied using the SMAW process, root, intermediate, and cover PT examinations adequately assure that there are no flaws that are unacceptable per ASME BPVC Section XI requirements for nominal normal operating stress magnitudes of up to approximately 7 ksi and nominal accident condition stress magnitudes of up to approximately 14 ksi.
3. The location of the proposed intermediate level PT examination is established as the middle layer between the root and cover PT examination layers of their associated 3/4" nominal (5/8" minimum) thickness depositions. This approach is consistent with ASME BPVC Section III, Paragraph NB-5200 which only requires progressive surface examinations to be performed at the “lesser of one-half of the maximum welded joint dimension measured parallel to the center line of the connection or ½ in.” for some partial penetration joint configurations.

Based on the top end outer closure weld primary stresses for normal conditions presented in Table 3.5-5 for axisymmetric load cases and for all accident conditions presented in Table 3.7-11 through Table 3.7-15, the above conditions for root, intermediate and cover PT examination are met. Therefore, the guidance provided in ISG-4 is met for the FuelSolutions™ W21 canister outer closure plate weld to the canister shell with the weld examination requirements specified on the drawings in Section 1.5.1 of this FSAR.

Table 3.9-1 - Fuel Assembly Weight Summary and Fuel Grid Spacer Tributary Weights

Canister Type	Fuel Assembly Class	Total Weight (lb.)	Total Length (in.)	Line Load[1] (lb/in.)	Incore Grid Spacers	
					Pitch[2] (in.)	Trib. Wt.[3] (lb.)
W21M-LD and W21T-LL	**CE 16x16**	**1430**	**178.6**	**8.01**	**17.91**	**143.4**
	CE 16x16, System 80	1430	180.0	7.94	17.91	142.3
W21M-LS and W21T-LS	**B&W 15x15 (w/ CC)**	**1680**	**173.5**	**9.68**	**21.09**	**204.2**
	B&W 17x17 (w/ CC)	1654	173.5	9.53	21.09	201.1
	CE 14x14 (w/ CC)	1369	169.6	8.07	16.81	135.7
	WE 17x17 (w/ CC)	1662	168.9	9.84	20.55	202.2
	St. Lucie 2 (w/ CC)	1366	170.6	8.01	17.09	136.8
W21M-SD and W21T-SL	B&W 15x15	1515	167.4	9.05	21.09	190.9
	B&W 17x17	1505	167.4	8.99	21.09	189.6
	WE 14x14 (w/ CC)	1432	166.3	8.61	26.19	225.5
	WE 15x15 (w/ CC)	**1637**	**166.9**	**9.81**	**26.19**	**256.9**
W21M-SS and W21T-SS	CE 14x14	1292	158.8	8.14	16.81	136.8
	WE 14x14	1302	162.8	8.00	26.19	209.5
	WE 15x15	**1472**	**162.7**	**9.05**	**26.19**	**236.9**
	WE 17x17	1482	163.0	9.09	20.55	186.8
	Fort Calhoun (w/ CC)	1287	158.5	8.12	16.81	136.5
	Haddam Neck[4]	1421	139.9	10.16	21.08	214.2
	Palisades	1360	150.6	9.03	15.50	140.0
	St. Lucie 2	1300	159.7	8.14	17.09	139.1
	Yankee Rowe	797	112.9	7.06	18.30	129.2

Notes:

(1) Fuel line load is equal to the total fuel weight divided by the fuel assembly length.

(2) Fuel grid spacer pitch (i.e., center to center spacing) is obtained from the OCRWM database.[39]

(3) The grid spacer tributary weight is calculated as the fuel line load times the grid spacer pitch.

(4) Haddam Neck fuel is not qualified for storage in the FuelSolutions™ system at this time, but does provide the bounding line load used for the analysis.

[39] U.S. Department of Energy, Office of Civilian Radioactive Waste Management, *Characteristics of Spent Fuel, High-Level Waste, and Other Radioactive Wastes Which May Require Long-Term Isolation*, DOE/RW-0184, 1987 and 1992.

Table 3.9-2 - FuelSolutions™ W21M-LD Spacer Plate Tributary Weights

Spacer Plate No.	Bottom to Centerline Distance (inches)	Spacer Plate Thickness (inches)	Tributary Length (inches)	Tributary Weight (lbs)				Total Tributary Weight (lbs)
				Spacer Plate	Fuel Assy[1]	Guide Tube	Support Rod	
1	2.000	2.00	3.313	766	557	58	28	1,410
2	4.625	0.75	3.188	280	536	80	53	949
3	8.375	0.75	3.750	280	631	94	65	1,070
4	12.125	0.75	3.875	280	652	97	67	1,096
5	16.125	0.75	4.125	280	694	103	73	1,150
6	20.375	0.75	4.250	280	715	106	75	1,177
7	24.625	0.75	4.313	280	726	108	77	1,190
8	29.000	2.00	4.375	766	736	109	51	1,663
9	33.375	0.75	4.863	280	818	121	89	1,309
10	38.725	0.75	5.350	280	900	133	99	1,413
11	44.075	0.75	5.350	280	900	133	99	1,413
12	49.425	0.75	5.350	280	900	133	99	1,413
13	54.775	0.75	5.488	280	923	137	102	1,443
14	60.400	2.00	5.625	766	946	140	78	1,931
15	66.025	0.75	5.488	280	923	137	102	1,443
16	71.375	0.75	5.350	280	900	133	99	1,413
17	76.725	0.75	5.350	280	900	133	99	1,413
18	82.075	0.75	5.350	280	900	133	99	1,413
19	87.425	0.75	5.350	280	900	133	99	1,413
20	92.775	0.75	5.350	280	900	133	99	1,413
21	98.125	0.75	5.350	280	900	133	99	1,413
22	103.475	0.75	5.488	280	923	137	102	1,443
23	109.100	2.00	5.625	766	946	140	78	1,931
24	114.725	0.75	5.488	280	923	137	102	1,443
25	120.075	0.75	5.350	280	900	133	99	1,413
26	125.425	0.75	5.350	280	900	133	99	1,413
27	130.775	0.75	5.350	280	900	133	99	1,413
28	136.125	0.75	5.363	280	902	134	99	1,416
29	141.500	2.00	5.250	766	883	131	70	1,851
30	146.625	0.75	4.813	280	810	120	88	1,298
31	151.125	0.75	4.500	280	757	112	81	1,231
32	155.625	0.75	4.375	280	736	109	78	1,204
33	159.875	0.75	4.250	280	715	106	75	1,177
34	164.125	0.75	4.000	280	673	100	70	1,123
35	167.875	0.75	3.188	280	536	80	53	949
36	170.500	2.00	2.188	766	368	55	4	1,193
37&38[2]	172.250	1.50	8.125	561	1367	178	143	2,249

Notes:

(1) Tributary weights are based on a maximum line load of 8.01 lb/inch for the CE 16×16 fuel assembly without control components.

(2) Spacer plates 37 and 38 are directly adjacent to one another and are treated as a single plate with a total thickness of 1.50 inches for tributary weight calculations.

Table 3.9-3 - FuelSolutions™ W21M-LS Spacer Plate Tributary Weights

Spacer Plate No.	Bottom to Centerline Distance (inches)	Spacer Plate Thickness (inches)	Tributary Length (inches)	Tributary Weight (lbs)				Total Tributary Weight (lbs)
				Spacer Plate	Fuel Assy[1]	Guide Tube	Support Rod	
1	2.000	2.00	3.313	766	685	58	28	1,538
2	4.625	0.75	3.188	280	659	80	53	1,072
3	8.375	0.75	3.750	280	775	94	65	1,214
4	12.125	0.75	3.750	280	775	94	65	1,214
5	15.875	0.75	4.000	280	827	100	70	1,278
6	20.125	0.75	4.250	280	879	106	75	1,341
7	24.375	0.75	4.438	280	918	111	80	1,389
8	29.000	2.00	4.750	766	982	119	59	1,927
9	33.875	0.75	4.913	280	1016	123	90	1,509
10	38.825	0.75	4.950	280	1023	124	91	1,518
11	43.775	0.75	4.950	280	1023	124	91	1,518
12	48.725	0.75	4.950	280	1023	124	91	1,518
13	53.675	0.75	5.163	280	1067	129	95	1,572
14	59.050	2.00	5.375	766	1111	135	73	2,085
15	64.425	0.75	5.163	280	1067	129	95	1,572
16	69.375	0.75	4.950	280	1023	124	91	1,518
17	74.325	0.75	4.950	280	1023	124	91	1,518
18	79.275	0.75	4.950	280	1023	124	91	1,518
19	84.225	0.75	4.950	280	1023	124	91	1,518
20	89.175	0.75	4.950	280	1023	124	91	1,518
21	94.125	0.75	4.950	280	1023	124	91	1,518
22	99.075	0.75	5.163	280	1067	129	95	1,572
23	104.450	2.00	5.375	766	1111	135	73	2,085
24	109.825	0.75	5.163	280	1067	129	95	1,572
25	114.775	0.75	4.950	280	1023	124	91	1,518
26	119.725	0.75	4.950	280	1023	124	91	1,518
27	124.675	0.75	4.950	280	1023	124	91	1,518
28	129.625	0.75	5.162	280	1067	129	95	1,572
29	135.000	2.00	5.250	766	1086	131	70	2,054
30	140.125	0.75	4.813	280	995	120	88	1,484
31	144.625	0.75	4.500	280	930	113	81	1,404
32	149.125	0.75	4.375	280	905	110	78	1,373
33	153.375	0.75	4.125	280	853	103	73	1,309
34	157.375	0.75	3.875	280	801	97	67	1,246
35	161.125	0.75	3.813	280	788	95	66	1,230
36	165.000	2.00	2.813	766	582	70	18	1,436
37&38[2]	166.750	1.50	6.625	561	1370	141	111	2,182

Notes:

(1) Tributary weights are based on a maximum line load of 9.85 lb/inch for the WE 17×17 fuel assembly with control components.

(2) Spacer plates 37 and 38 are directly adjacent to one another and are treated as a single plate with a total thickness of 1.50 inches for tributary weight calculations.

Table 3.9-4 - FuelSolutions™ W21M-SD Spacer Plate Tributary Weights

Spacer Plate No.	Bottom to Centerline Distance (inches)	Spacer Plate Thickness (inches)	Tributary Length (inches)	Tributary Weight (lbs)				Total Tributary Weight (lbs)
				Spacer Plate	Fuel Assy[1]	Guide Tube	Support Rod	
1	2.000	2.00	3.438	766	708	61	31	1,567
2	4.875	0.75	3.188	280	657	80	53	1,069
3	8.375	0.75	3.625	280	747	91	62	1,180
4	12.125	0.75	3.875	280	798	97	67	1,243
5	16.125	0.75	4.125	280	850	103	73	1,306
6	20.375	0.75	4.250	280	875	106	75	1,338
7	24.625	0.75	4.688	280	966	117	85	1,448
8	29.750	2.00	5.125	766	1056	128	67	2,018
9	34.875	0.75	5.063	280	1043	127	93	1,543
10	39.875	0.75	5.000	280	1030	125	92	1,527
11	44.875	0.75	5.000	280	1030	125	92	1,527
12	49.875	0.75	5.000	280	1030	125	92	1,527
13	54.875	0.75	5.238	280	1079	131	97	1,587
14	60.350	2.00	5.475	766	1128	137	75	2,106
15	65.825	0.75	5.238	280	1079	131	97	1,587
16	70.825	0.75	5.000	280	1030	125	92	1,527
17	75.825	0.75	5.000	280	1030	125	92	1,527
18	80.825	0.75	5.000	280	1030	125	92	1,527
19	85.825	0.75	5.000	280	1030	125	92	1,527
20	90.825	0.75	5.238	280	1079	131	97	1,587
21	96.300	2.00	5.475	766	1128	137	75	2,106
22	101.775	0.75	5.238	280	1079	131	97	1,587
23	106.775	0.75	5.000	280	1030	125	92	1,527
24	111.775	0.75	5.000	280	1030	125	92	1,527
25	116.775	0.75	5.000	280	1030	125	92	1,527
26	121.775	0.75	5.238	280	1079	131	97	1,587
27	127.250	2.00	5.475	766	1128	137	75	2,106
28	132.725	0.75	5.238	280	1079	131	97	1,587
29	137.725	0.75	4.750	280	978	119	86	1,464
30	142.225	0.75	4.500	280	927	113	81	1,401
31	146.725	0.75	4.500	280	927	113	81	1,401
32	151.225	0.75	4.250	280	875	106	75	1,338
33	155.225	0.75	4.088	280	842	102	72	1,297
34	159.400	2.00	2.963	766	610	74	27	1,478
35&36[2]	161.150	1.50	6.625	561	1365	141	68	2,134

Notes:

(1) Tributary weights are based on a maximum line load of 9.81 lb/inch for the WE 15×15 fuel assembly with control components.

(2) Spacer plates 35 and 36 are directly adjacent to one another and are treated as a single plate with a total thickness of 1.50 inches for tributary weight calculations.

Table 3.9-5 - FuelSolutions™ W21M-SS Spacer Plate Tributary Weights

Spacer Plate No.	Bottom to Centerline Distance (inches)	Spacer Plate Thickness (inches)	Tributary Length (inches)	Tributary Weight (lbs)				Total Tributary Weight (lbs)
				Spacer Plate	Fuel Assy[1]	Guide Tube	Support Rod	
1	2.000	2.00	3.500	766	747	88	32	1,633
2	5.000	0.75	3.375	280	720	85	57	1,142
3	8.750	0.75	3.750	280	800	94	65	1,239
4	12.500	0.75	3.875	280	827	97	67	1,272
5	16.500	0.75	4.000	280	853	100	70	1,304
6	20.500	0.75	4.313	280	920	108	77	1,385
7	25.125	2.00	4.750	766	1013	119	59	1,958
8	30.000	0.75	4.813	280	1027	121	88	1,515
9	34.750	0.75	4.750	280	1013	119	86	1,499
10	39.500	0.75	4.750	280	1013	119	86	1,499
11	44.250	0.75	4.750	280	1013	119	86	1,499
12	49.000	0.75	5.000	280	1067	125	92	1,564
13	54.250	2.00	5.250	766	1120	132	70	2,088
14	59.500	0.75	5.000	280	1067	125	92	1,564
15	64.250	0.75	4.750	280	1013	119	86	1,499
16	69.000	0.75	4.750	280	1013	119	86	1,499
17	73.750	0.75	4.750	280	1013	119	86	1,499
18	78.500	0.75	4.750	280	1013	119	86	1,499
19	83.250	0.75	4.750	280	1013	119	86	1,499
20	88.000	0.75	5.000	280	1067	125	92	1,564
21	93.250	2.00	5.250	766	1120	132	70	2,088
22	98.500	0.75	5.000	280	1067	125	92	1,564
23	103.250	0.75	4.750	280	1013	119	86	1,499
24	108.000	0.75	4.750	280	1013	119	86	1,499
25	112.750	0.75	4.750	280	1013	119	86	1,499
26	117.500	0.75	5.000	280	1067	125	92	1,564
27	122.750	2.00	5.250	766	1120	132	70	2,088
28	128.000	0.75	5.000	280	1067	125	92	1,564
29	132.750	0.75	4.625	280	987	116	84	1,466
30	137.250	0.75	4.500	280	960	113	81	1,434
31	141.750	0.75	4.250	280	907	106	75	1,369
32	145.750	0.75	3.875	280	827	97	67	1,272
33	149.500	0.75	4.063	280	867	102	71	1,320
34	153.875	2.00	3.063	766	653	77	23	1,519
35&36[2]	155.625	1.50	7.750	561	1653	169	135	2,518

Notes:

(1) Tributary weights are based on a maximum line load of 10.16 lb/inch for the Haddam Neck fuel assembly with control components (see Note (4) in Table 3.9-1).

(2) Spacer plates 35 and 36 are directly adjacent to one another and are treated as a single plate with a total thickness of 1.50 inches for tributary weight calculations.

Table 3.9-6 - Canister Shell Top Outer Closure Plate Bending Stresses with No Edge Moment Restraint

Load Condition or Load Combination	Uniform Pressure Load (psi)	Annular Line Load (lb/in.)	Maximum Bending Stress (ksi)	Allowable Bending S.I. (ksi)	Design Margin
Vertical Dead Weight (D_v)	0.6	0	0.2	30.0	+Large
Normal Internal Pressure (P)	10	0	3.2	30.0	+8.28
Vertical Transfer (L_{hv})	0	532	2.8	30.0	+9.79
Normal Horizontal Transfer (L_{hh1})	0	895	11.1	30.0	+1.70
Off-Normal Internal Pressure (P_o)	16	0	5.2	36.0	+5.96
Misalignment Horiz. Transfer (L_m)	0	1,392	17.3	36.0	+1.08
Accident Internal Pressure (P_a)	69	0	22.3	69.3	+2.11
Storage Cask End Drop (A_s)	29	0	9.4	69.3	+6.37
L.C. A2 (D_v + P + T)	9.4	0	3.0	30.0	+8.87
L.C. A4 (D_v + L_{hv} + P + T)	10	532	6.0	30.0	+3.99
L.C. A5 (D_h + L_{hh1} + P + T)	10	895	14.3	30.0	+1.09
L.C. C1 (D_v + P_o + T_o)	15.4	0	5.0	36.0	+6.23
L.C. C2 (D_v + L_{hv} + P_o + T_o)	16	532	8.0	36.0	+3.53
L.C. C3 (D_h + L_{hh1} + P_o + T_o)	16	895	16.3	36.0	+1.21
L.C. C4 (D_h + L_m + P + T)	10	1,392	20.5	36.0	+0.75
L.C. D1 (D_v + L_{hv} + P_a + T_o)	69	532	25.1	69.3	+1.76
L.C. D2 (D_h + L_{hh1} + P_a + T_o)	69	895	33.4	69.3	+1.07
L.C. D3 (P_o + T + A_s)	13	0	6.2	69.3	+10.2

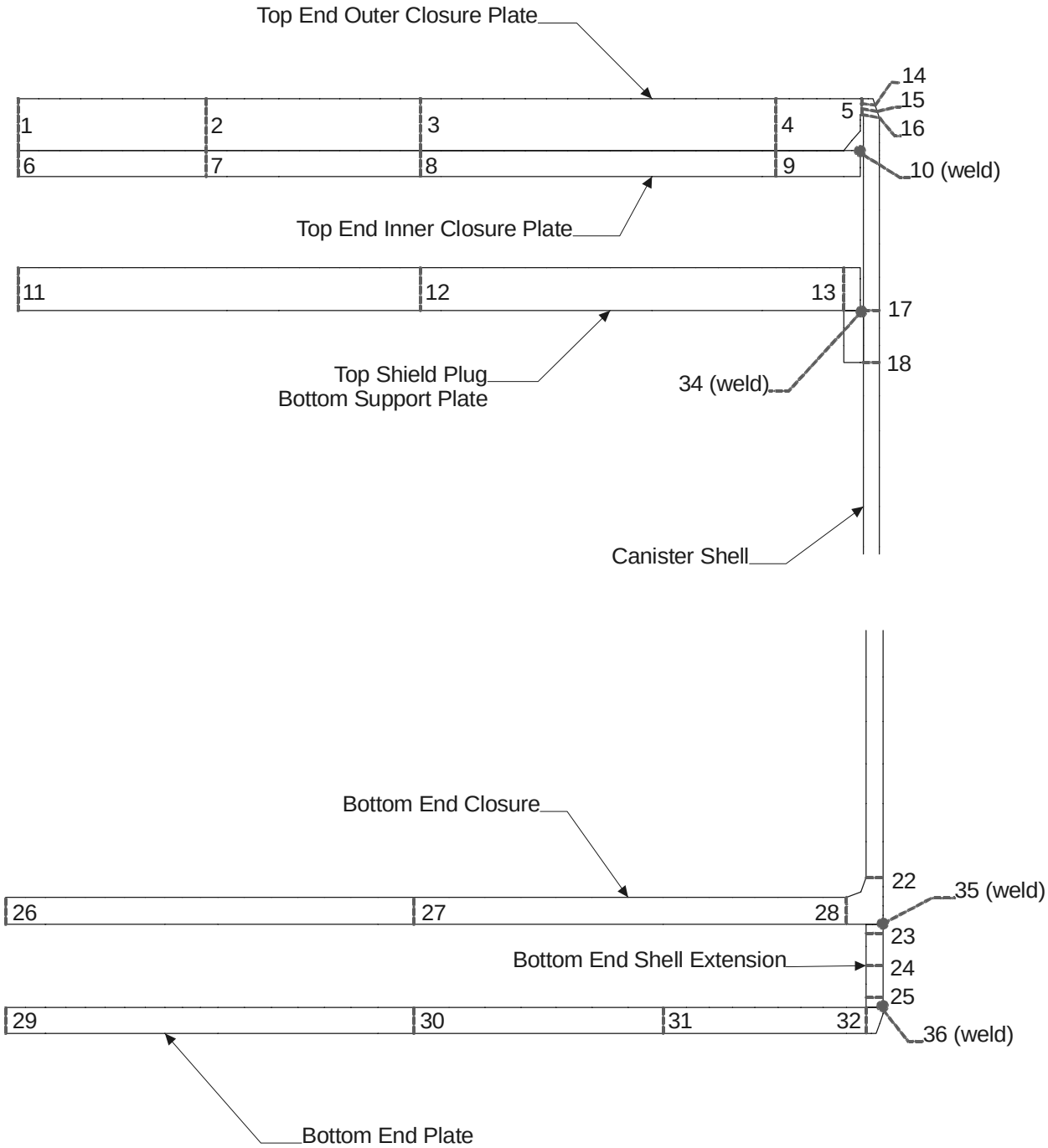

Figure 3.9-1 - Canister Shell Axisymmetric Model Stress Evaluation Locations - Top and Bottom End Regions

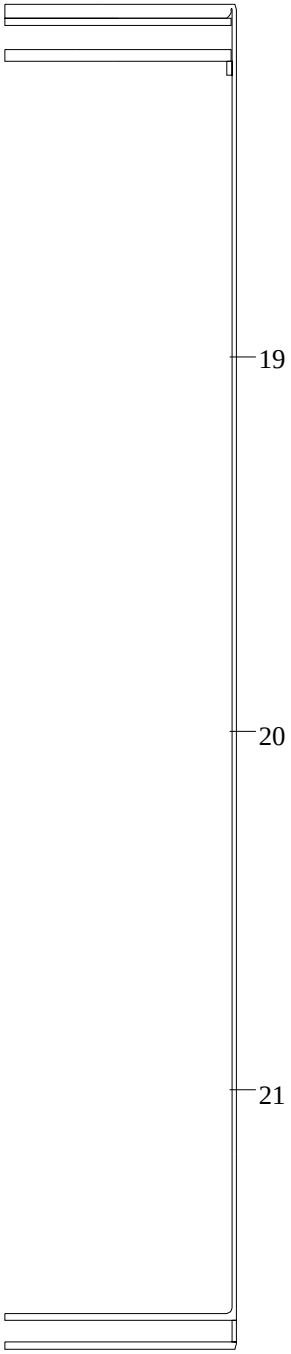

Figure 3.9-2 - Canister Shell Axisymmetric Model Stress Evaluation Locations - Cavity Region

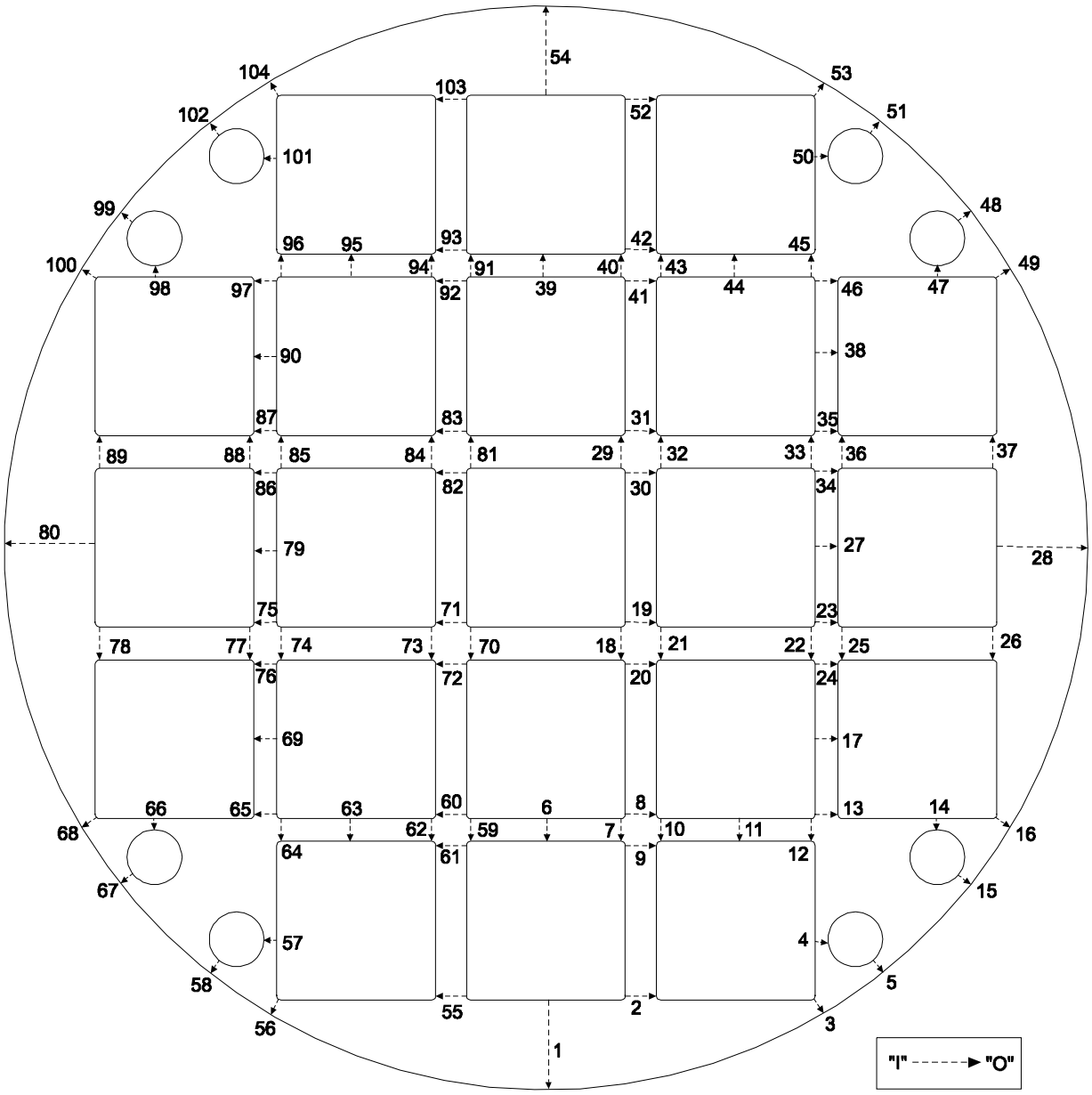

Figure 3.9-3 - W21 Canister Spacer Plate Stress Evaluation Points

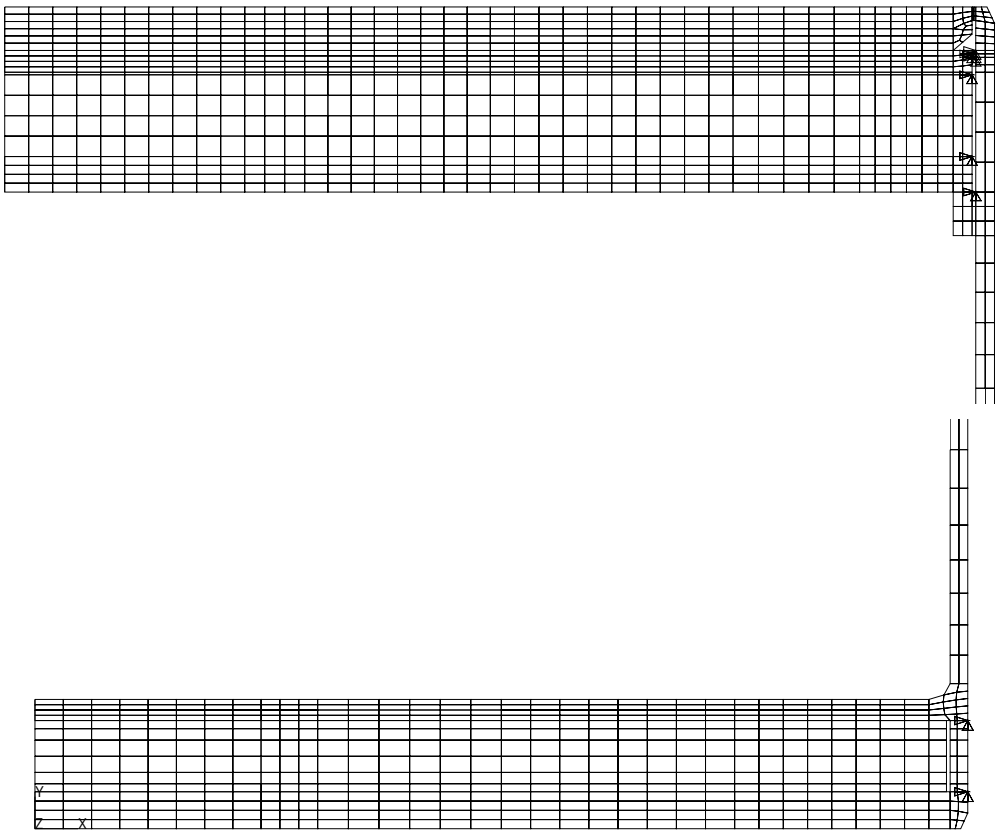

Figure 3.9-4 - Bounding Canister Shell Assembly Axisymmetric Finite Element Model, Top and Bottom End Regions

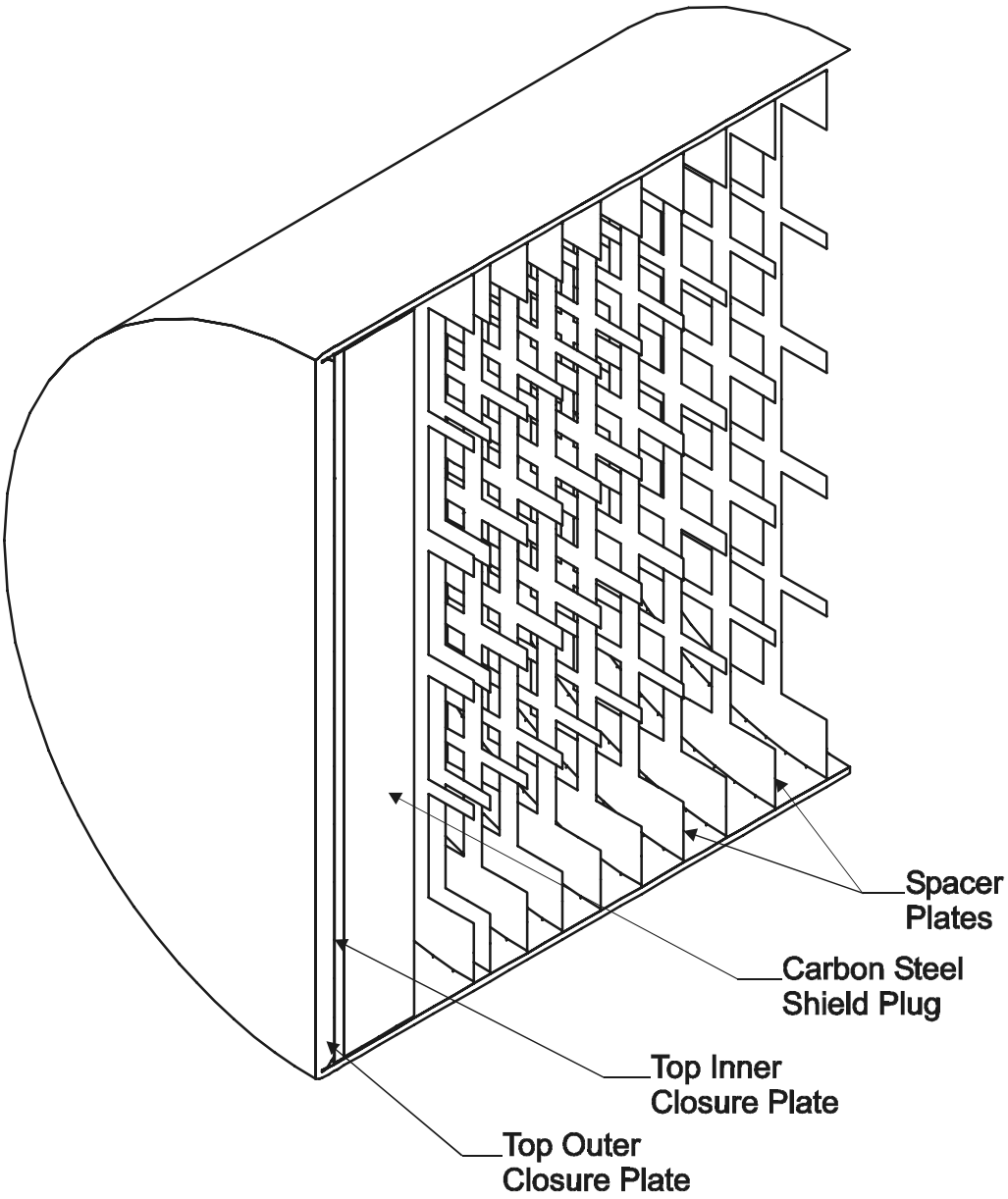

Figure 3.9-5 - W21 Canister Shell Assembly Half-Symmetry Finite Element Model

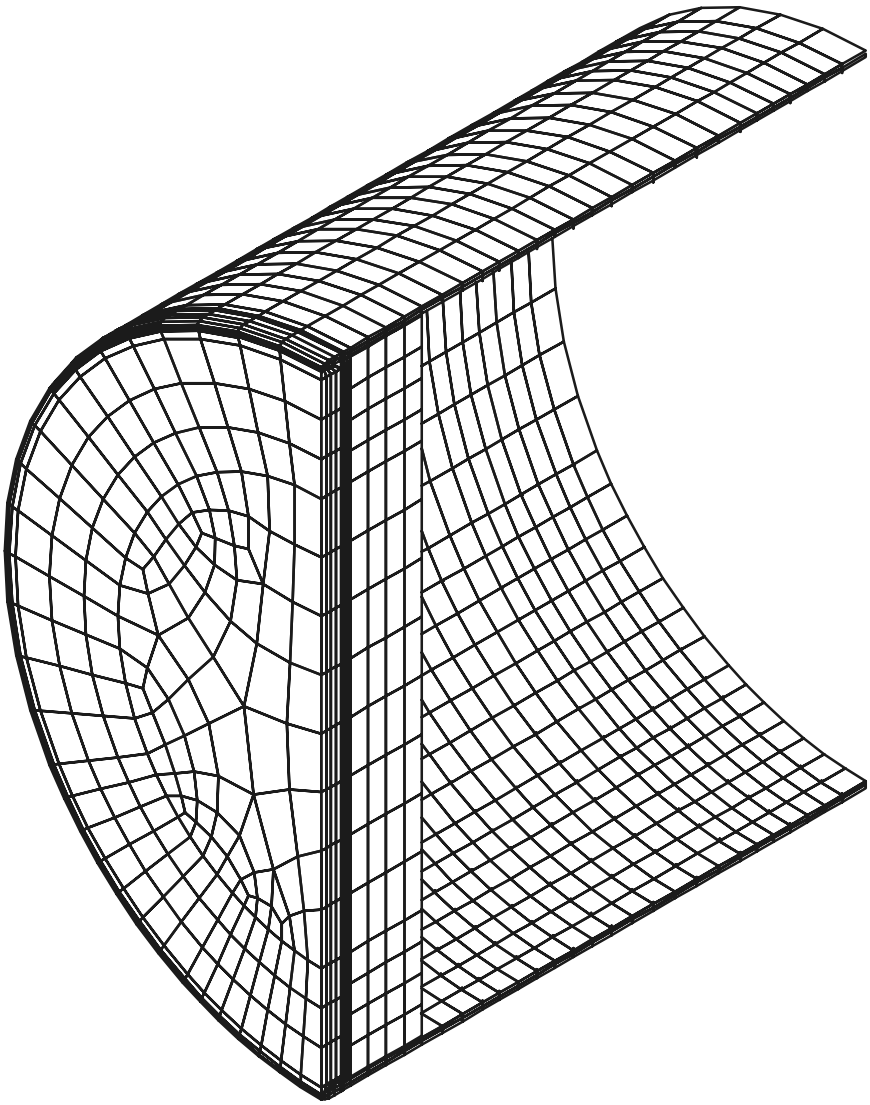

Figure 3.9-6 - W21 Canister Shell Assembly Half-Symmetry Finite Element Model, Shell Assembly Mesh

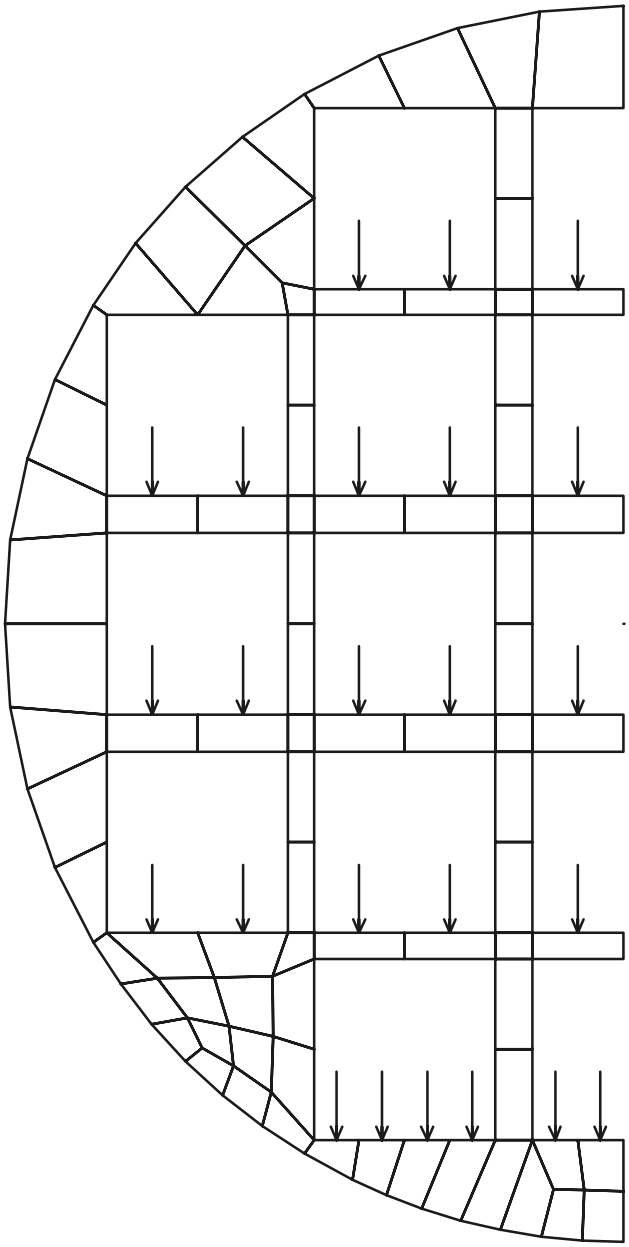

Figure 3.9-7 - W21 Canister Shell Assembly Half-Symmetry Finite Element Model - Spacer Plate Mesh and Loading

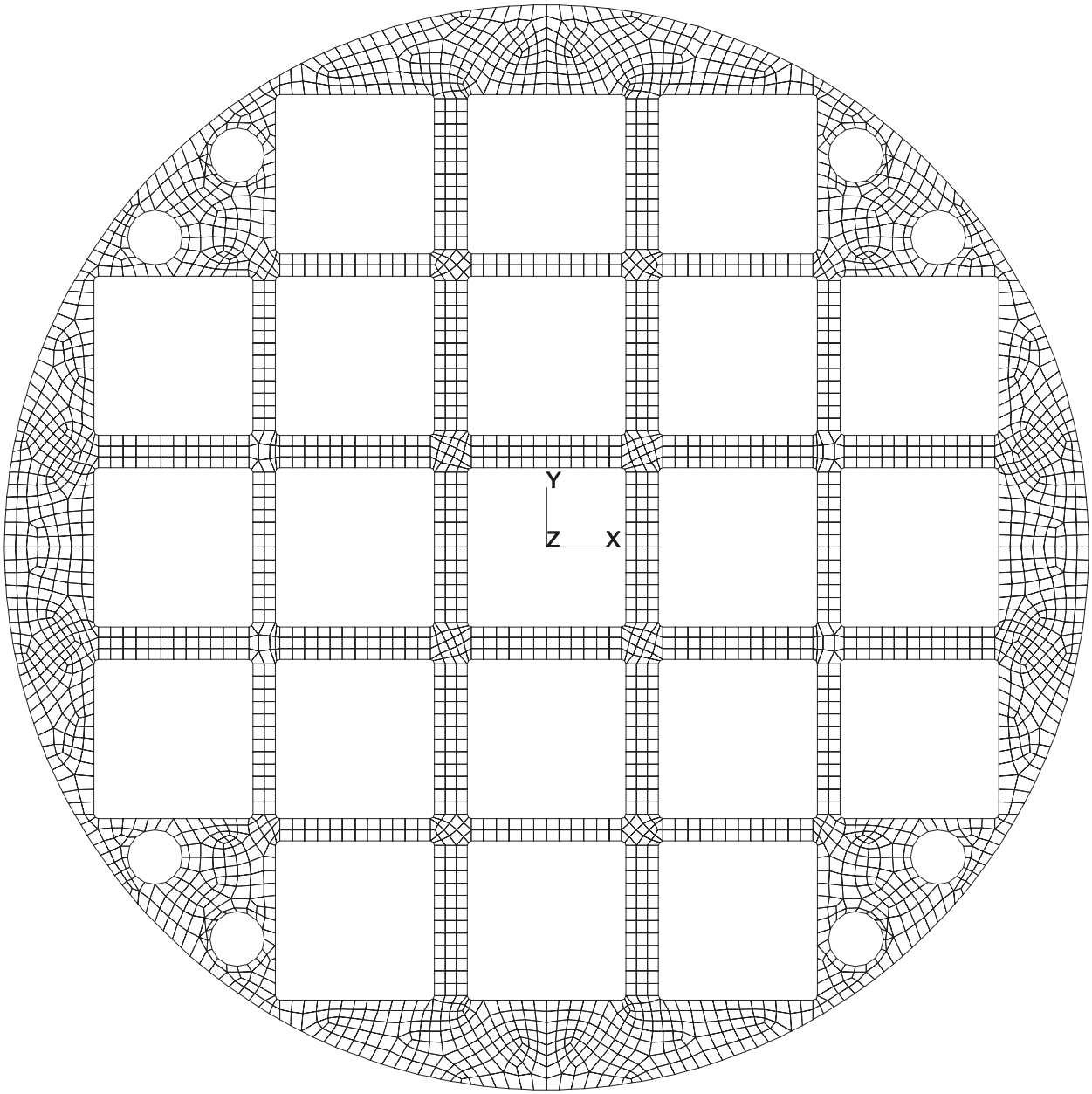

Figure 3.9-8 - W21 Spacer Plate Plane Stress Finite Element Model

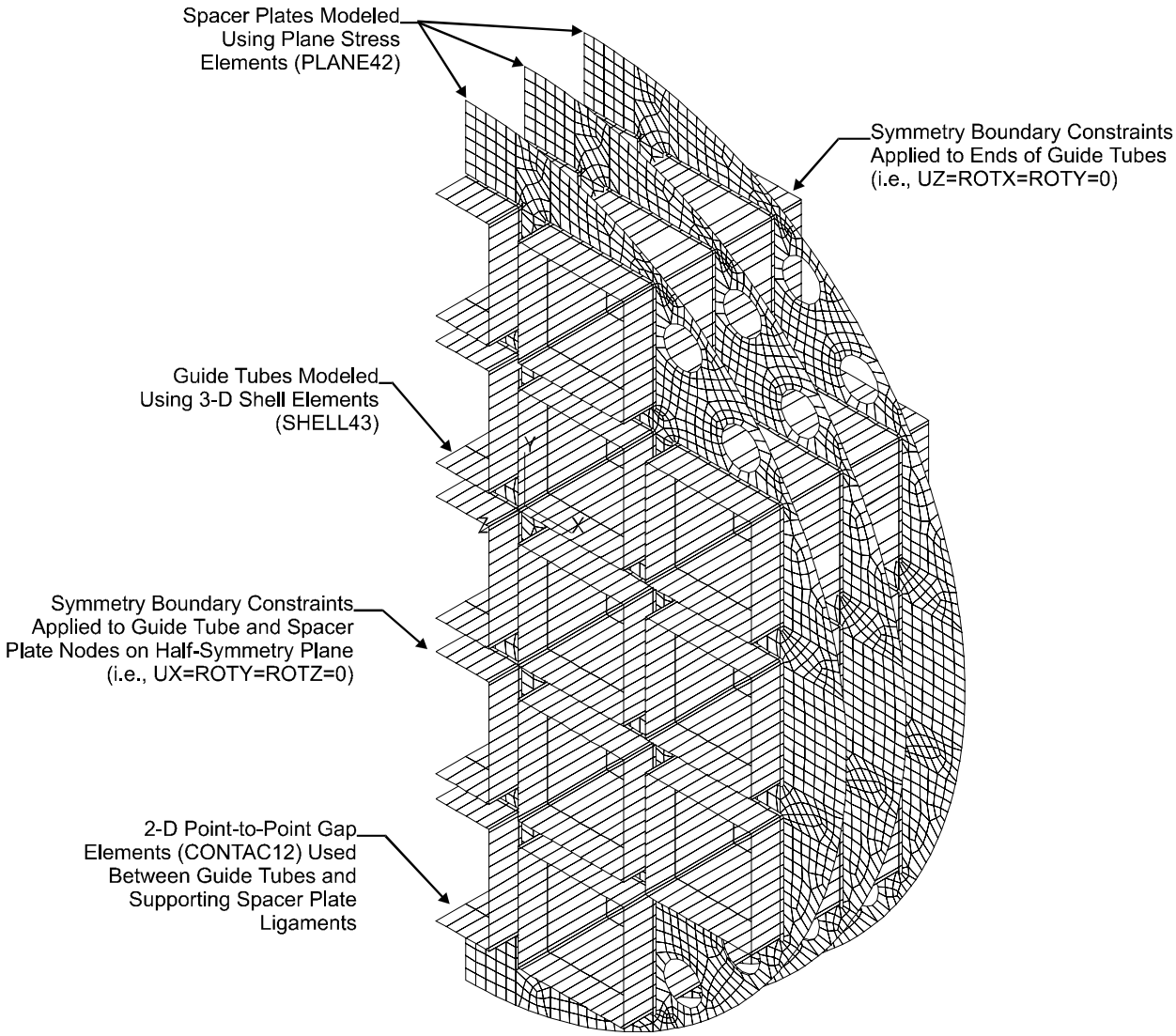

Figure 3.9-9 - W21 Spacer Plate ½-Symmetry Multi-Span Plane-Stress Finite Element Model

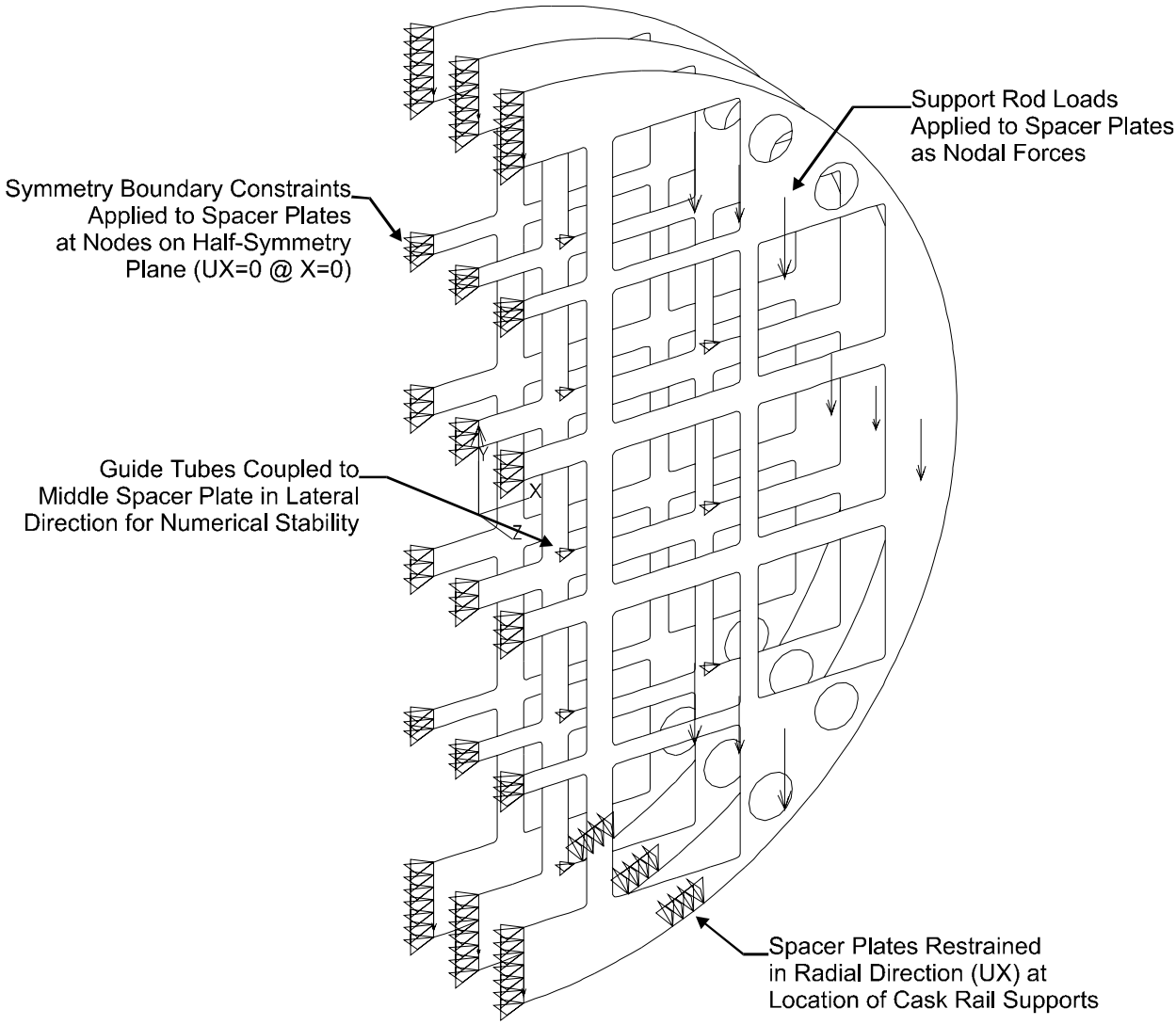

Note: The spacer plates are also loaded by the weight of the guide tubes and fuel. The guide tube and fuel loads are shown separately in Figure 3.9-11 for clarity.

Figure 3.9-10 - W21 Spacer Plate ½-Symmetry Multi-Span Plane-Stress Model Loads and Boundary Conditions

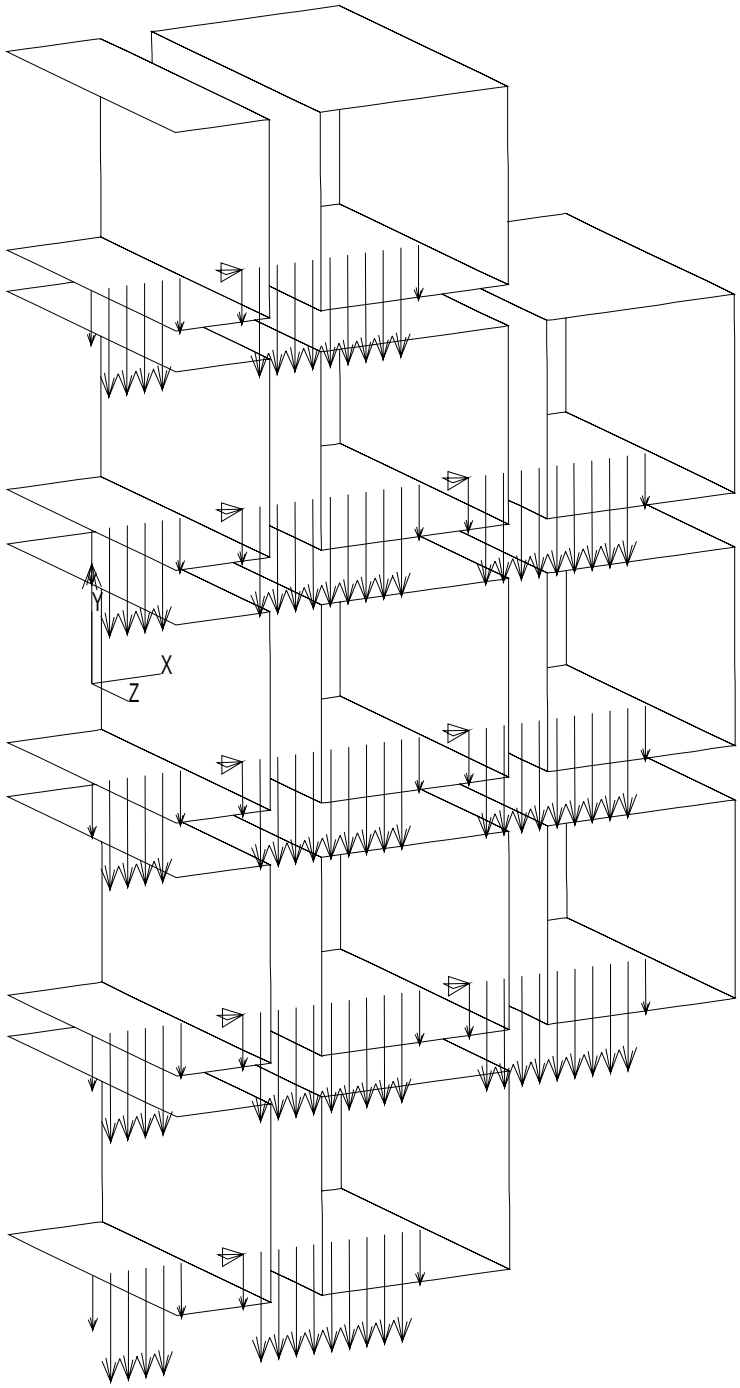

Figure 3.9-11 - W21 Spacer Plate ½-Symmetry Multi-Span Plane-Stress Model Guide Tube Loads

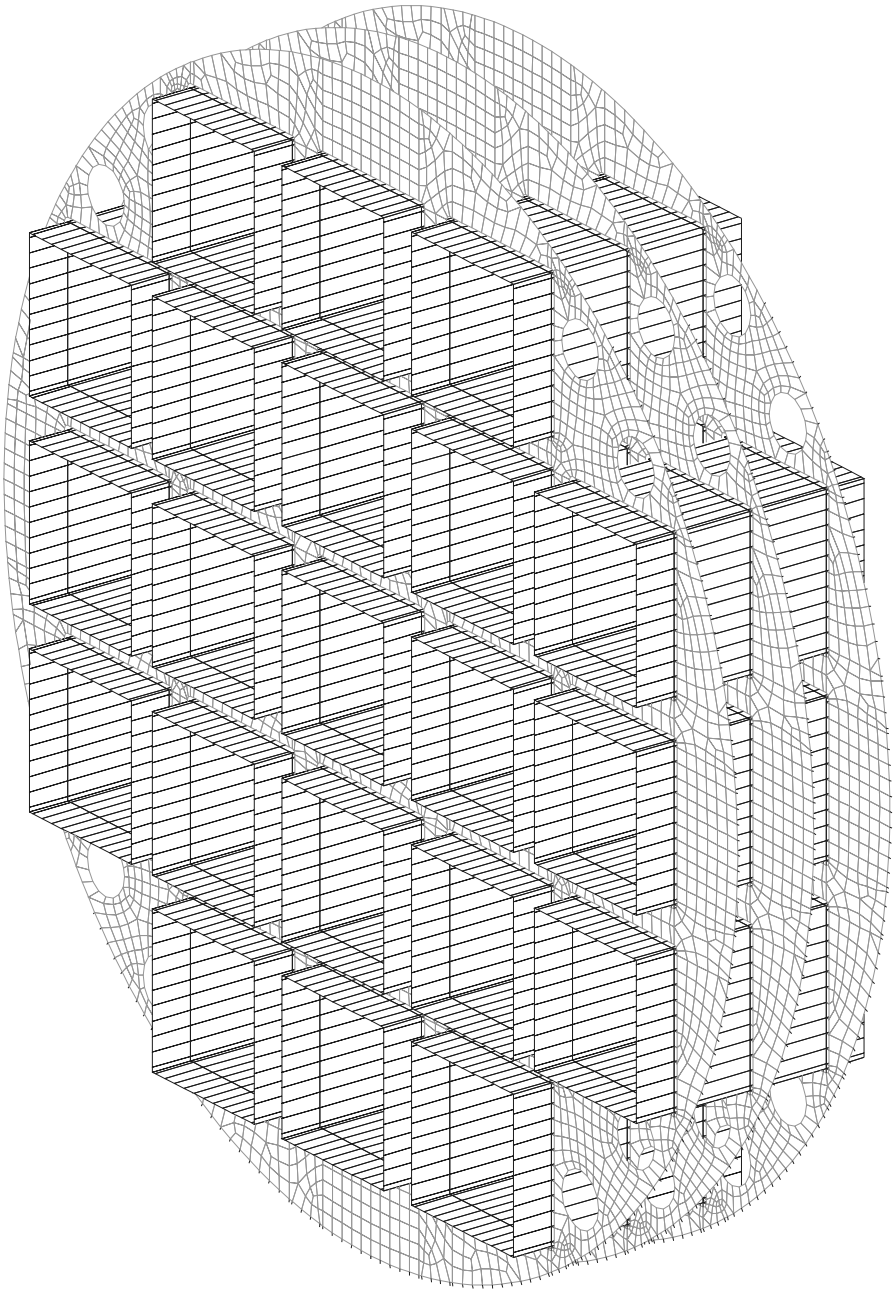

Figure 3.9-12 - W21 Spacer Plate Full Multi-Span Plane Stress Finite Element Model

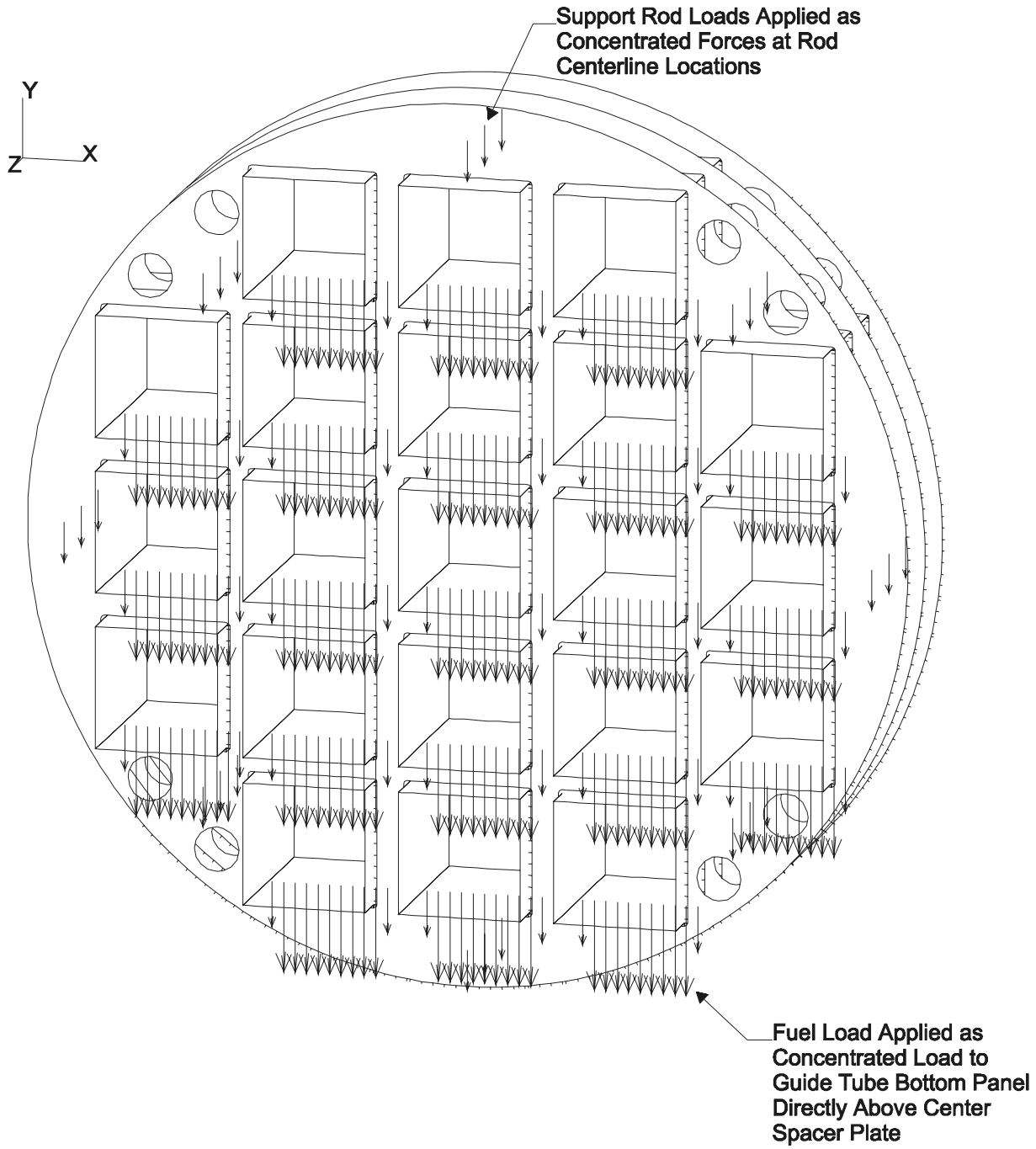

Figure 3.9-13 - Applied Loads for 0° Transfer Cask Side Drop

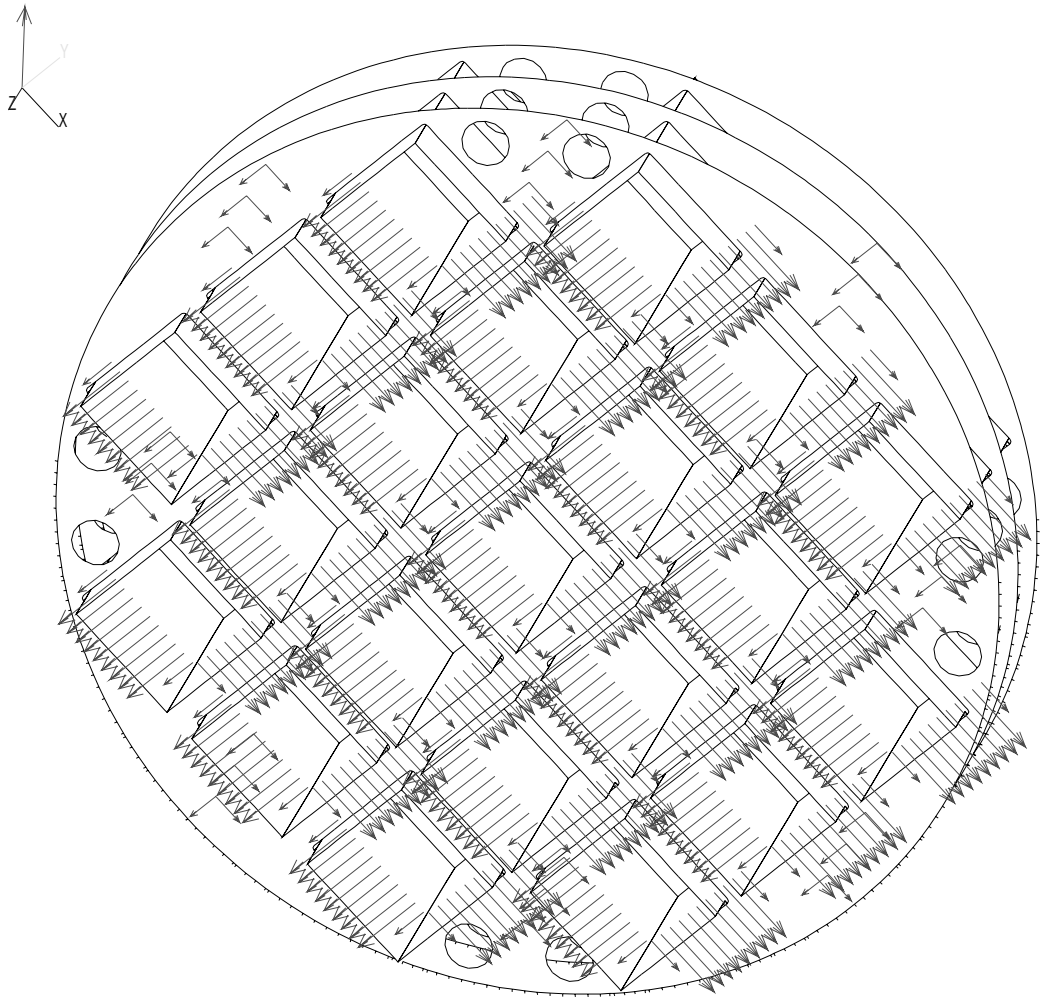

Figure 3.9-14 - Applied Loads for 45° Transfer Cask Side Drop

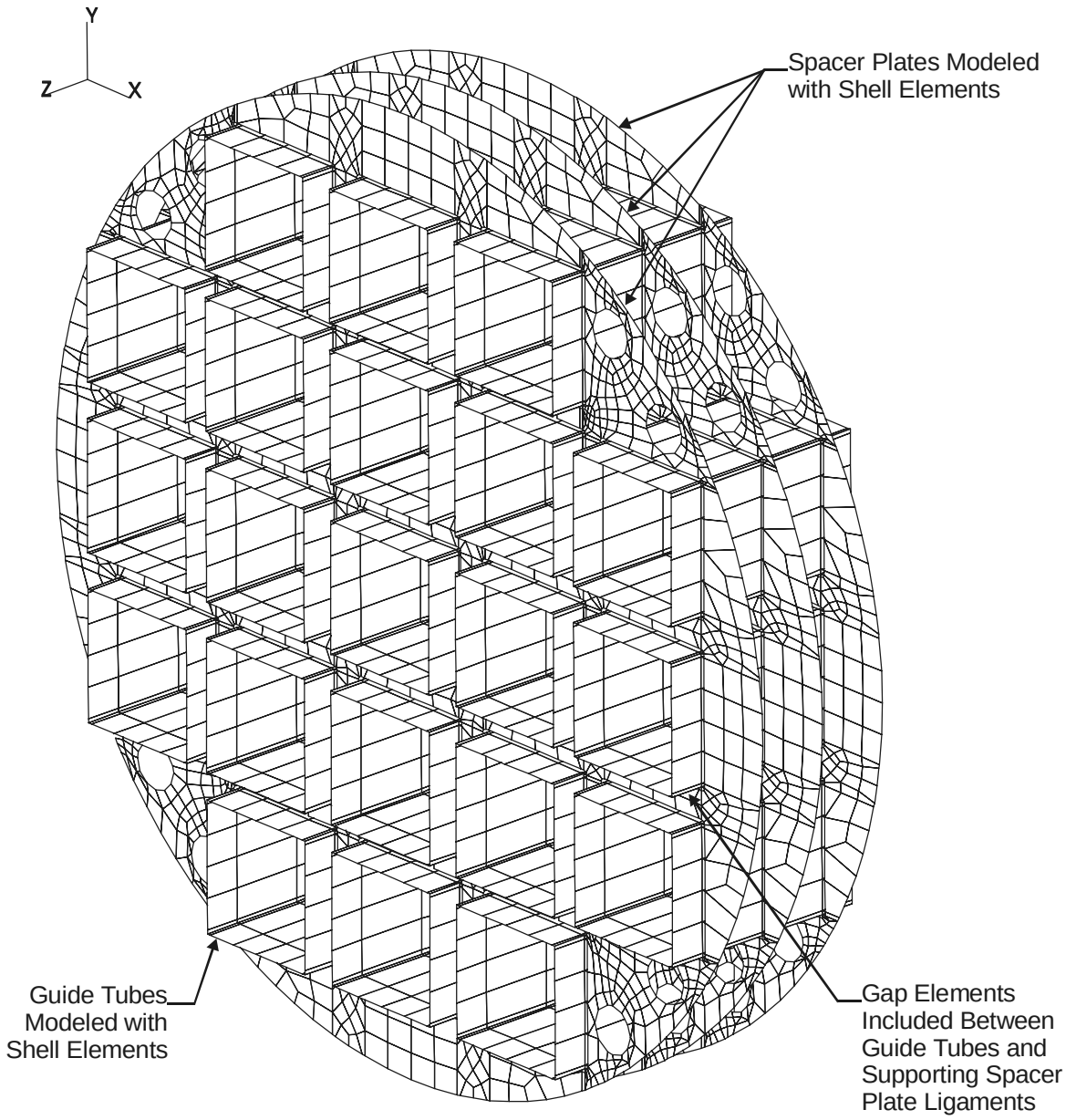

Figure 3.9-15 - W21 Spacer Plate Full Multi-Span Shell Finite Element Model

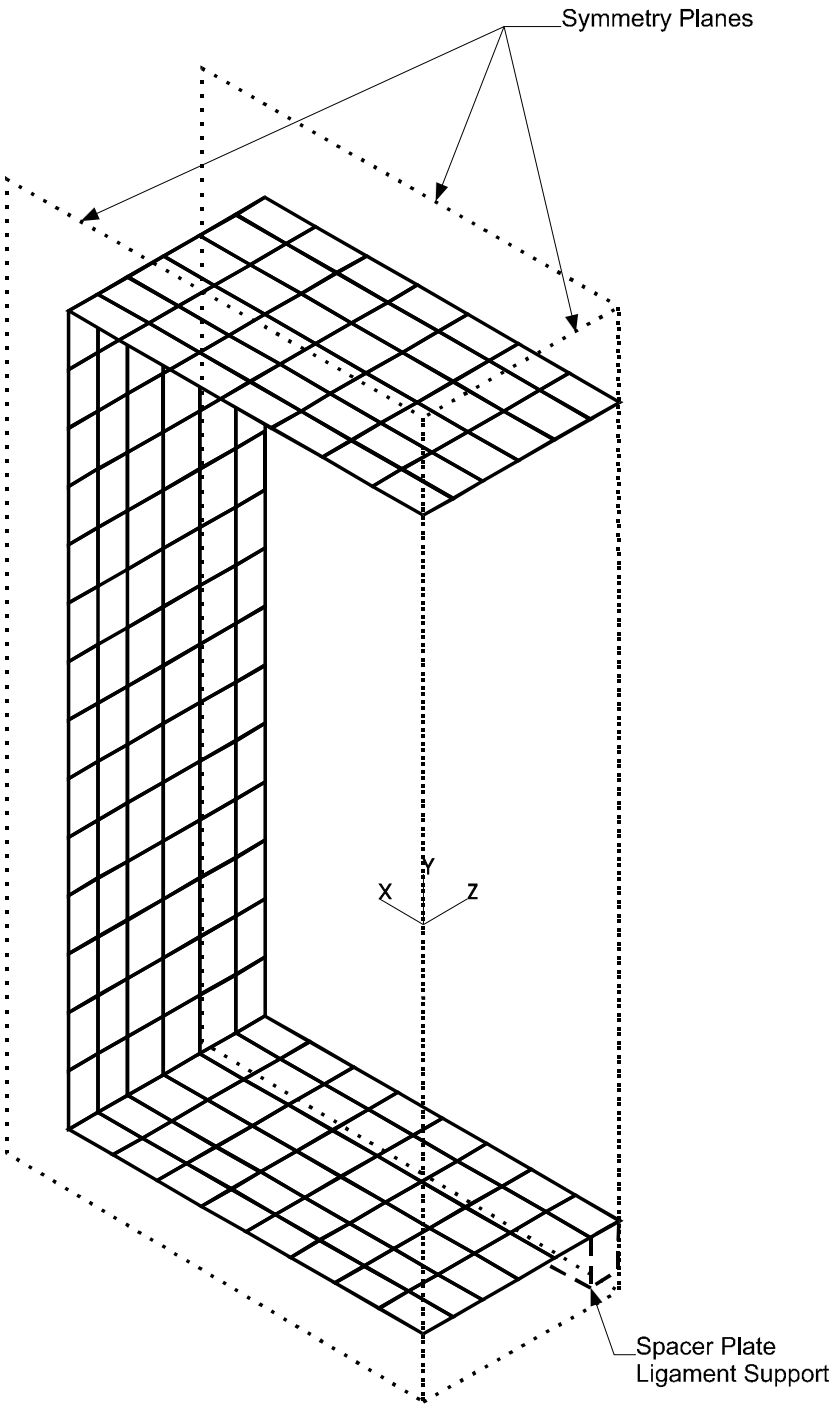

Figure 3.9-16 - W21 Guide Tube 1/2-Symmetry Single Span Finite Element Model

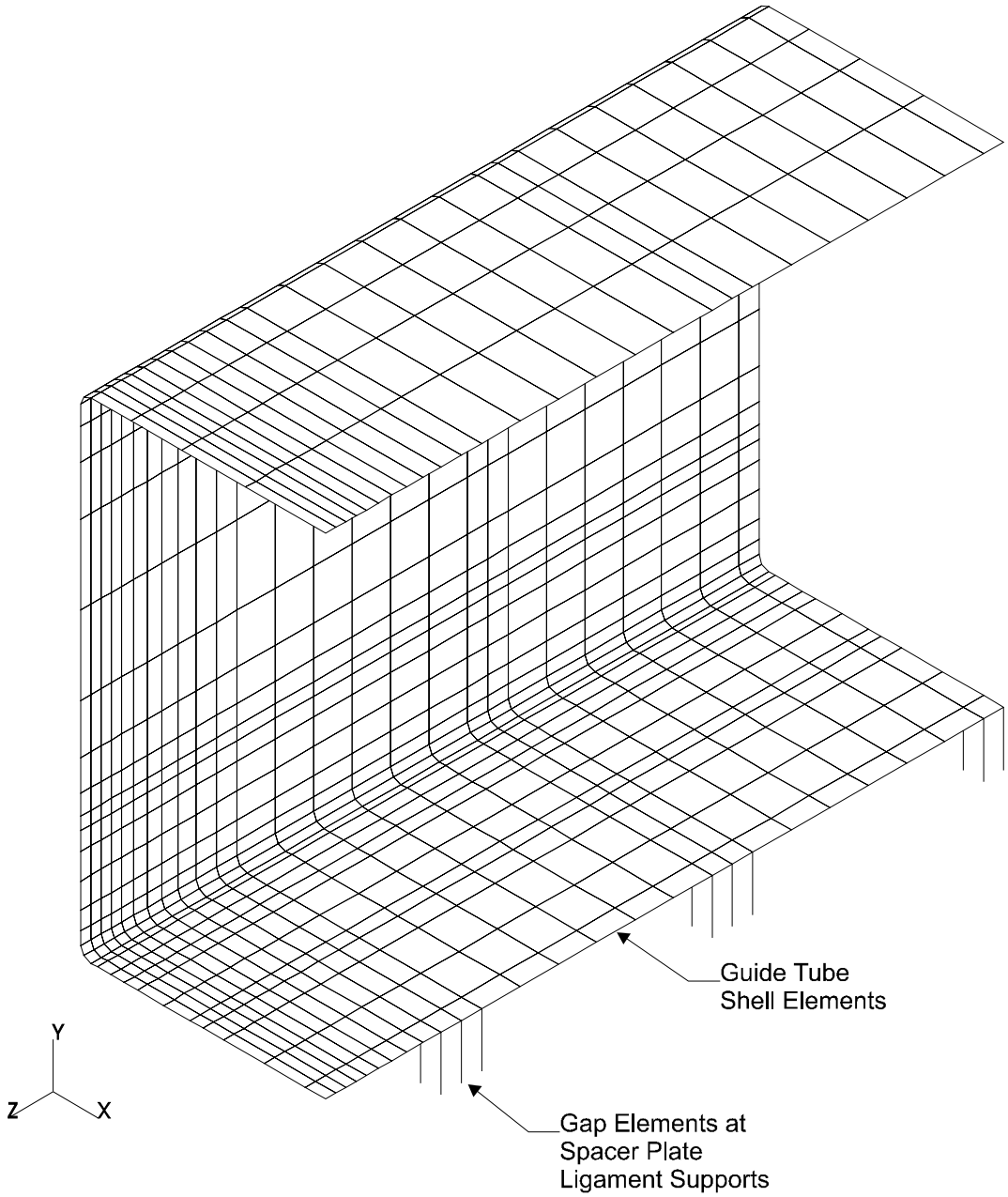

Figure 3.9-17 - W21 Guide Tube ½-Symmetry Multi-Span Finite Element Model

4. THERMAL EVALUATION

This chapter presents the thermal evaluations which demonstrate that the FuelSolutions™ W21 canister meets the thermal requirements of 10CFR72,[1] as defined in Section 2.3 of this FSAR, for dry storage of SNF when used as an integral part of the FuelSolutions™ Storage System. The FuelSolutions™ W21 canister is designed to provide confinement of SNF assemblies during transfer and storage within the FuelSolutions™ W100 Transfer Cask and the W150 Storage Cask. The thermal design and safety evaluation for the FuelSolutions™ transfer and storage casks are provided in Chapter 4 of the FuelSolutions™ Storage System FSAR.[2] The thermal evaluation of the FuelSolutions™ W21 canister is compared with the results presented in the FuelSolutions™ Storage System FSAR to assure that the thermal interface criteria for the transfer and storage casks in Section 2.2 and Chapter 4 of that FSAR are met.

As presented in this chapter, the FuelSolutions™ W21 canister is evaluated to assure that the thermal performance of the combined canister and cask system complies with the regulatory safety requirements during all credible normal, off-normal, and postulated accident conditions. The maximum thermal ratings for the FuelSolutions™ W21 canister are established based on the applicable allowable temperatures for the materials of fabrication for the canister, casks, and for the SNF assembly cladding. This assures that the canister/cask component temperatures are maintained below their respective allowable temperatures throughout canister closure, transfer, and dry storage operations and that the fuel cladding is protected against degradation and gross ruptures. The maximum thermal ratings for the FuelSolutions™ storage and transfer casks envelope those determined for the FuelSolutions™ W21 canister herein. A W21 canister may not be loaded in the storage cask or transfer cask unless the SNF assemblies meet the requirements of the *technical specification* contained in Section 12.3 of this FSAR. In this manner, the thermal safety of both the canister and the casks is assured.

It should be noted that, for the purposes of the FuelSolutions™ Storage System FSAR, the heat load generated by the canisterized SNF assemblies on either the storage cask or the transfer cask is represented by a bounding axial heat flux distribution that envelopes the heat load arising from any SNF assembly class and type that can be accommodated by any of the FuelSolutions™ family of canister subsystems, as described in Section 4.1.3 of the FuelSolutions™ Storage System FSAR. The heat load for the W21 canister is represented by bounding axial heat flux profiles for the SNF assemblies which may be accommodated within the canister. These bounding heat flux profiles simulate the axial variation in decay heat for each of the loaded fuel assemblies. In this manner, the thermal qualification of the W21 canister is decoupled from the thermal qualification of the W150 Storage Cask, the W100 Transfer Cask, and other FuelSolutions™ canisters.

The thermal evaluations presented herein for the W21 canister within the transfer and storage casks for the design basis thermal load conditions are accomplished using both steady-state and

[1] Title 10, Code of Federal Regulations, Part 72 (10CFR72), *Licensing Requirements for the Independent Storage of Spent Nuclear Fuel and High-Level Radioactive Waste*, United States Nuclear Regulatory Commission, 1995.

[2] WSNF-220, *FuelSolutions™ Storage System Final Safety Analysis Report*, NRC Docket No. 72-1026, BNG Fuel Solutions.

transient analyses. These thermal load conditions, defined in Section 2.3 of this FSAR, envelope the thermal conditions expected during all normal and off-normal operations and postulated accident conditions within the transfer and storage casks. The W21 canister thermal rating defined within this chapter is also used to predict temperatures within the canister and cask systems. The applicable allowable temperatures are presented and comparisons are made with calculated temperatures as a basis for acceptance.

As discussed in Section 7.1 of this FSAR, confinement of all radioactive materials is provided by the FuelSolutions™ W21 canister. Although the thermal design of the storage cask and transfer cask provides assurance that the fuel assemblies remain sufficiently protected against degradation during dry storage that might otherwise lead to gross cladding ruptures, both casks are vented to atmosphere and cannot become pressurized. Evaluation of the W21 canister maximum internal pressure resulting from normal, off-normal, and postulated accident conditions is presented in this chapter.

This chapter presents FuelSolutions™ W21 canister thermal evaluation results for the design basis normal, off-normal, and postulated accident conditions. Section 4.2 provides the thermal properties for the W21 canister materials, and Section 4.3 provides the corresponding material specifications. Storage cask and transfer cask material properties and specifications are presented in the corresponding sections of the FuelSolutions™ Storage System FSAR. W21 canister analytical model descriptions and thermal results are given in Sections 4.3, 4.5, and 4.6, for normal, off-normal, and postulated accident conditions, respectively. The storage cask and transfer cask analytical models, which interface with the W21 canister model, are described in the corresponding sections of the FuelSolutions™ Storage System FSAR. Supplemental data, including descriptions of the computer codes used in the analysis are presented in Section 4.7.

4.1 Discussion

The thermal loads imposed on the FuelSolutions™ W21 canister arise from the decay heat of the SNF assemblies and from the external environment, including insolation. During storage system operations, the loaded W21 canister is always surrounded by either the storage cask or transfer cask and is, therefore, not directly subjected to ambient conditions such as insolation. The W21 canister is designed to passively dissipate the decay heat from the SNF to the transfer cask or the storage cask while maintaining component material temperatures and fuel assembly cladding temperatures within their allowable values. The effects of ambient conditions on the W21 canister, including insolation acting on the surrounding cask, are addressed under the normal and off-normal conditions discussed in Sections 4.3 and 4.5, respectively. The thermal response of the W21 canister under postulated accident conditions, including a postulated storage cask fire event and a loss of transfer cask liquid neutron shielding, is discussed in Section 4.6.

The thermal analysis of the FuelSolutions™ W21 canister is performed for normal, off-normal, and accident conditions using the SINDA/FLUINT[3] computer program. An overview of the SINDA/FLUINT computer program is presented in Section 4.7.4.1.

This section provides a description of the thermal design features for the FuelSolutions™ W21 canister, the interface conditions with the storage cask and transfer cask, the design basis ambient conditions used, the design basis SNF heat flux profiles, the thermal modes of operation, the canister thermal ratings, and the canister internal pressure.

4.1.1 Design Features

FuelSolutions™ W21 canister design features are described in Section 1.2.1.3 of this FSAR. Storage cask and transfer cask design features are described in Sections 1.2.1.1 and 1.2.1.2 of the FuelSolutions™ Storage System FSAR. The configuration of the W21 canister is shown in Figure 1.2-2 of this FSAR. Drawings of the W21 canister are provided in Section 1.5.1 of this FSAR. This section summarizes the W21 canister design features that affect thermal performance. Since the W21 canister is always placed in the cavity of either the storage cask or the transfer cask, a brief description of the cask design features that affect thermal performance is also included.

4.1.1.1 W21 Canister

The FuelSolutions™ W21 canister subsystem includes two classes of FuelSolutions™ canister assemblies (i.e., the W21M and the W21T) and four different canister configurations within each class. A full discussion of the canister types and classes is presented in Section 1.2.1 of this FSAR. While the canister basket configurations may vary somewhat in their length; type of shield plug material used; and the number, placement, and material used for the basket spacer plates; all configurations share the same basic heat transfer characteristics in that each canister configuration uses a spacer plate and guide tube type of basket assembly to position and support the fuel assemblies within the canister. Since this type of basket assembly is not mechanically

[3] SINDA/FLUINT, *Systems Improved Numerical Differencing Analyzer and Fluid Integrator*, Version 4.0, Prepared for NASA, Johnson Spacecraft Center, Contract NAS9-19365, by Cullimore and Ring Technologies, Inc., Littleton, CO, 1998.

attached to the canister wall, the principal means of heat transfer between the fuel assemblies and the canister shell is via radiation and convection. The following paragraphs provide a brief overview of the thermal similarities and differences between the W21M and the W21T class canister configurations.

The following general design features are used to enhance the thermal performance of all of the canister assembly configurations:

- Carbon steel spacer plates are used for increased thermal conductance.
- Basket assembly layouts are configured to maximize convective flow areas for horizontal transportation configuration.
- Helium gas is used to backfill the canister to an internal pressure of 24 psia for normal hot storage conditions to enhance both conduction and convection heat transfer across void spaces in the basket.

Up to twenty-one fuel assemblies may be loaded into each of the FuelSolutions™ W21 canister configurations. The fuel assemblies are structurally intact zircaloy-clad fuel, as described in Section 2.2 of this FSAR. Fuel assembly acceptance specifications for the W21 canister which satisfy the thermal requirements presented in this chapter are presented in the *technical specification* contained in Section 12.3 and the fuel cooling tables in Chapter 5 of this FSAR.

The FuelSolutions™ W21 canisters consist of the same major components: a right cylindrical shell, top closure plate, top outer closure plate, bottom closure plate, bottom closure plate, top and bottom end shield plugs, and vent and drain ports. The W21T canister shells are fabricated of Type 304 stainless steel versus the Type 316 steel used in the W21M canister shell.

Both the W21M and the W21T canister designs have short (182") and long (192") canister shell configurations. The different materials used for the shield plugs include depleted uranium (DU), carbon steel, and lead.

The W21T basket assemblies use either forty or forty-two carbon steel spacer plates to position and support the fuel assemblies. A thick stainless steel spacer plate is located at the bottom end of each W21T basket. The W21M canister designs use a similar number of spacer plates, but substitute one thicker stainless steel spacer plate in lieu of two thinner carbon steel plates at five locations.

4.1.1.2 Storage Cask

The thermal design features of the FuelSolutions™ W150 Storage Cask are discussed in Section 4.1.1 of the FuelSolutions™ Storage System FSAR. A summary of the primary thermal design features of the storage cask as they relate to the FuelSolutions™ W21 canister subsystem includes:

- Passive heat removal by natural convection is enhanced through the use of the “chimney effect” to induce the flow of ambient air through the cask and across the canister.
- An inner annulus between the canister shell and the inner surface of storage cask’s thermal shield and an outer annulus between the thermal shield outer surface and the interior surface of the storage cask’s steel liner provide dual air paths for natural convection cooling.

- The thermal shield protects the storage cask concrete from elevated temperatures by blocking the direct transfer, via radiation, of heat from the surface of the canister shell, and by providing a physical barrier to separate the hotter airflow near the canister from the airflow near the concrete.
- The canister is supported vertically above the bottom of the storage cask cavity by support tubes which permit radial air flow distribution under the canister and into the annulus with a minimum of air flow resistance.
- A centering guide rail system is used to provide a minimum positive separation distance between the canister and the storage cask inner wall.
- Two thermocouples are provided for storage cask temperature monitoring. One thermocouple is provided at mid-height and mid-thickness of the storage cask concrete wall and a second thermocouple is located at mid-height at the liner/concrete interface. These thermocouples provide a means for periodic temperature monitoring of the storage cask thermal performance and indirect monitoring of the canister temperatures.
- Short and long storage cask configurations are available to accommodate both the short and long W21 canister classes.

4.1.1.3 Transfer Cask

The thermal design features of the FuelSolutions™ W100 Transfer Cask are discussed in Section 4.1.1 of the FuelSolutions™ Storage System FSAR. A summary of the primary thermal design features of the transfer cask as they relate to the FuelSolutions™ W21 canister subsystem includes:

- The FuelSolutions™ W21 canister transfers the decay heat from the fuel assemblies to the transfer cask through a combination of conduction, radiation, and convection.
- Since the inside diameter of the transfer cask cavity is larger than the canister outside diameter, an annulus exists between the canister and the cask.
- During fuel loading operations, the canister/cask annulus is filled with water and sealed to prevent radiological contamination of the canister outer shell and transfer cask cavity. The water in the annulus also serves to provide additional radiation shielding and enhances conductive heat transfer.
- Following canister vacuum drying and closure operations, the annulus is drained and vented.
- The transfer cask/canister annulus is provided with vent and drain connections on opposite sides of the cask to allow the circulation of cooling water through the annulus prior to canister draining or reflooding operations.
- A thermocouple is provided at mid-height on the surface of the transfer cask structural shell to provide a means of periodic temperature monitoring of the transfer cask thermal performance and indirect monitoring of the canister temperatures.
- The transfer cask cavity length accommodates the long W21 canister configuration. A cask cavity spacer is inserted to allow the use of a short W21 canister within the transfer cask.

4.1.2 Design Basis Ambient Conditions

In accordance with 10CFR72, a range of long- and short-term natural ambient conditions are considered in the thermal evaluation of the FuelSolutions™ W21 canister in the storage cask and transfer cask, as defined in Section 2.3 of the FuelSolutions™ Storage System FSAR. These ambient conditions are assumed to occur concurrently with the design basis normal, off-normal, and postulated accident events (e.g., all vents blocked, loss of neutron shield, etc.) and form the design basis thermal loading conditions for the W21 canister within the storage and the transfer casks.

The design basis off-normal and postulated accident design conditions for the W21 canister are defined in Section 2.3 of this FSAR. Off-normal events are defined as those that are expected to occur on the order of once per calendar year. Accident events are defined as those that might occur only once during the use of the canister within the storage cask or the transfer cask.

The thermal analyses of the W21 canister presented herein are based on conservative assumptions and methodologies. Because of this conservative approach, the actual thermal response of the canister to the design basis events is expected to produce larger positive design margins than reported herein (i.e., lower temperatures and thermal stresses).

As defined in Section 2.3 of the FuelSolutions™ Storage System FSAR, a normal long-term annual average design temperature of 77°F is selected for indoor and outdoor FuelSolutions™ Storage System operations, which bounds all site locations in the contiguous United States. To facilitate a bounding thermal stress analysis of the W21 canister provided in Chapter 3 of this FSAR, steady-state thermal evaluations are performed with variations from the average ambient temperature value in the range of 0°F (normal cold) to 100°F (normal hot). The effects of extreme off-normal ambient temperatures in the range of -40°F to 125°F are evaluated for the design basis W21M canister within the storage and transfer casks. Since these ambient conditions do not exist for extended periods of time, short-term allowable temperatures apply for the fuel assembly cladding and the canister materials of construction, as discussed in Section 4.3.1. For the W21 canister off-normal and postulated accident thermal conditions involving storage cask or transfer cask configuration changes (i.e., all vents blocked, loss of liquid neutron shielding), the steady-state normal hot ambient temperature of 100°F is conservatively assumed.

The 10CFR71[4] recommended values for insolation are used. These insolation values are applied to the storage cask and the transfer cask, as discussed in Section 4.1.2 of the FuelSolutions™ Storage System FSAR, and their effects are included in the W21 canister thermal evaluations provided herein.

4.1.3 Bounding Axial Heat Flux Profile

The FuelSolutions™ W21 canister is designed to accommodate a variety of PWR fuel assembly classes and types. In order to assure that all of the W21 canister design configurations presented in Section 1.2.1 are qualified to accommodate the worst-case thermal loads arising from the loading of any of the qualified fuel assemblies, an assessment is made of the physical and

[4] Title 10, Code of Federal Regulations, Part 71 (10CFR71), *Packaging and Transportation of Radioactive Materials*, United States Nuclear Regulatory Commission, 1995.

radiological characteristics for the entire range of fuel assemblies that may be loaded as defined in Section 2.2 of this FSAR. The results of this assessment are used to create a bounding axial heat flux profile for use in the thermal analysis. The axial heat flux profile and, hence, the temperature profile within the FuelSolutions™ W21 canister, are dependent upon the variation in the heat load and axial location of the particular fuel assembly loaded. The variation in heat load within the fuel assembly is a function of: 1) the fuel assembly class, 2) the corresponding heavy metal content, burnup, and cooling time, 3) the number of fuel assemblies in the canister, 4) the active length of the fuel assemblies, and 5) the axial position of the active fuel length within the canister. The above variables are set by the canister type and the characteristics of the specific fuel assembly class to be loaded. The specific fuel assembly classes and their characteristics that are accommodated by the W21 canister are presented in Table 1.2-3 of this FSAR. Sections 4.1.3.1 and 4.1.3.2 below describe how the bounding heat flux profile is determined and applied.

In order to address the axial heat profile variations with fuel assembly class and burnup, two thermal acceptance criteria are used for the W21 canister thermal qualification. These thermal acceptance criteria are: 1) a maximum heat load rating (Q_{max}), and 2) the maximum linear heat generation rate ($LHGR_{max}$) on a per unit length basis. Both thermal criteria are needed to define the allowable W21 canister thermal rating. Although the total heat load is the major determining factor in the overall temperature levels within the W21 canister, the temperature levels at any specific location are more directly affected by the linear heat generation rate. This is especially true where the cask and/or canister design and the material thermal conductivity combine to limit the axial spreading of localized heat effects.

4.1.3.1 Development of Bounding Axial Heat Flux Profiles

Development of PWR axial heat flux profiles is addressed in detail in Section 4.1.3 of the FuelSolutions™ Storage System FSAR. The variation in linear heat generation rate within the W21 canister is a function of the axial location of the active fuel within the canister. To create a bounding canister axial heat flux profile for use in analyzing the W21 canister, the design basis peaking factor curve for PWR fuel (from Figure 4.1-4 of the FuelSolutions™ Storage System FSAR) is adjusted for the location of the active fuel length within the W21 canister. Using this profile, a generic canister axial heat profile is developed which thermally bounds all of the heat flux profiles. This bounding profile, termed the “max. thermal” profile (Figure 4.1-1), envelopes the worst-case axial heat profile expected from any fuel assembly class to be stored in the W21 canister. An active fuel length of 150" is used for the “max. thermal” profile based on the longest active PWR fuel length (CE 16x16) to be loaded.

While this profile addresses the maximum heat load rating that a W21 canister can accommodate, it does not address the negative impact associated with the loading of shorter length fuel assemblies with relatively short cooling time. Such a fuel loading could yield a lower total heat load than that determined using the “max. thermal” profile, but still result in higher local canister and/or cask temperatures due to the concentration of the heat load over a limited axial length.

The “max. thermal gradient” profile (Figure 4.1-1) addresses the worst-case thermal gradient expected. This profile is used to determine the maximum linear heat generation rate that can be accommodated without exceeding local component allowable temperatures and to provide worst-

case axial thermal gradients for structural analysis. An active fuel length of 91" is used for the "max. thermal gradient" profile based on the shortest active PWR fuel length (Yankee Rowe) to be loaded.

Table 4.1-1 presents in tabular form the bounding canister axial heat profiles illustrated in Figure 4.1-1.

It should be noted that the design basis axial heat profiles are enveloping but are not intended to be an exact match of any of the fuel assembly specific profiles. Also, while the Figure 4.1-1 profiles are developed to cover both long (192") and short (182") W21 canisters, the short canister configuration generally presents the bounding case for thermal purposes since it concentrates the heat load over a shorter length within the canister, storage cask, and transfer cask. The short length fuel assembly used for the "max. thermal gradient" profile is generally loaded in the short length canisters.

4.1.3.2 Application of Axial Heat Profiles for Canister Analysis

The FuelSolutions™ W21 canister analytical model used for the thermal evaluation includes the fuel assembly axial heat flux as a boundary condition. Using the axial profiles in Figure 4.1-1, the maximum heat load rating (Q_{local}) at a specific axial location within the fuel assemblies in the analytical model is determined as follows:

$$Q_{local} = \left(\frac{Q_{Assy}}{AFL}\right) \cdot PF \cdot L$$

where:

Q_{local} = Local fuel assembly heat load at the nodal location

Q_{Assy} = Total fuel assembly heat load (kW) for the given axial profile

AFL = Active fuel length in inches for the associated axial profile (i.e., 150" for the "max. thermal", and 91" for the "max. thermal gradient" profiles)

PF = Local peaking factor at the center of the region being modeled (from Figure 4.1-1 or Table 4.1-1)

L = Length in inches of the region being modeled

For determination of the allowable W21 canister thermal rating within the storage cask and transfer cask, the value of Q_{Assy} is increased for each axial profile until one or more of the canister or cask allowable material temperatures are reached. The maximum value of Q_{Assy} that meets all canister/cask allowable temperatures is multiplied by the total number of assemblies (21) to determine the maximum heat load rating (Q_{max}) for that axial profile and cask.

The maximum linear heat generation rate is determined as follows:

$$LHGR_{\max} = \frac{Q_{\max} \cdot PF}{AFL}$$

where:

$LHGR_{max}$	=	Max. canister linear heat generation rate (kW/inch) for the given profile
Q_{max}	=	Total fuel assembly heat load (kW) for the given axial profile
PF	=	Base peaking factor
AFL	=	Assumed active fuel length for the profile analyzed (inches). Equals 150" for the “max. thermal”, and 91" for the “max. thermal gradient” profiles.

Repeating the allowable thermal rating qualification analysis for each of the axial heat profiles presented in Figure 4.1-1 yields one value for maximum heat load rating and one value for the associated canister maximum linear heat generation rate for each profile. The maximum value for Q_{max} and $LHGR_{max}$ from either axial heat profile becomes the qualifying thermal rating for the canister. Generally, Q_{max} is determined from the “max. thermal” profile and $LHGR_{max}$ is determined from the “max thermal gradient” profile. This is especially true for the cask designs which more efficiently transfer heat axially, reducing the influence of locally higher heat load rates.

These W21 canister thermal ratings are then used to generate the cooling tables presented in Section 5.2 of this FSAR. With the use of this methodology, any change in the fuel cooling time which increases the heat load above the qualified Q_{max} for the canister, restricts loading of that candidate fuel assembly until sufficient additional cooling time has occurred to reduce the heat load to the qualified Q_{max} for the canister. Likewise, any change in heat load, active fuel length, and burnup which yields a linear heat generation rate above the qualified $LHGR_{max}$ for the cask, will also result in a denied fuel loading until sufficient additional cooling time has occurred.

The fuel cooling tables developed in Section 5.2 of this FSAR account for the variation in axial heat profile peaking factor with burnup. This variation is presented for PWR fuel in Figure 4.1-5 of the FuelSolutions™ Storage System FSAR. As burnup level increases, the maximum peaking factor decreases and the axial profile becomes more uniform. Because the bounding PWR axial heat profiles used for determination of the W21 canister thermal ratings are compiled assuming 44 GWd/MTU burned fuel, lower burnup levels are penalized to account for the higher peaking factors associated with lower burnup fuels. Burnup-dependent penalty factors are applied by derating the maximum canister thermal ratings (Q_{max} and $LHGR_{max}$) during development of the cooling tables.

4.1.4 Thermal Operating Modes

The W21 canister is evaluated for all design basis thermal conditions in order to bound canister thermal performance for all normal, off-normal, and accident conditions expected during handling in the transfer cask and long-term storage in the storage cask. The thermal design of the canister is governed by the requirement to maintain fuel assembly and structural component temperatures and/or thermal gradients below allowable values during a combination of normal and off-normal events. The thermal acceptance criteria are selected to prevent thermally induced failures and the loss of structural properties within the fuel cladding, critical basket components, and the containment boundary components due to elevated temperatures and/or thermal gradients.

4.1.4.1 W21 Canister within Storage Cask

As discussed in Chapters 1 and 8 of this FSAR and the FuelSolutions™ Storage System FSAR, the versatility of the FuelSolutions™ W150 Storage Cask creates numerous operating modes that subject the W21 canister to varying thermal parameters. The primary operating parameters that influence W21 canister thermal performance within the storage cask include location (inside, outside); orientation (vertical, horizontal); top cover installation (on, off); inlet and outlet vent condition (open, blocked); ambient temperature (-40°F, 0°F, 77°F, 100°F, 125°F); and solar radiation (24-hour averaged or none). Various combinations of these parameters define the bounding W21 canister normal, off-normal, and accident thermal conditions for storage. The range of possible W21 canister thermal operating modes within the storage cask is presented in Table 4.1-1 of the FuelSolutions™ Storage System FSAR, together with the associated cask and environmental conditions that affect the thermal performance for each operating mode.

Of the fifteen operating modes listed in Table 4.1-1 of the FuelSolutions™ Storage System FSAR, many are similar enough to other operating modes that the associated thermal performance can be characterized by another, bounding operating mode. Table 4.1-2 of this FSAR summarizes the specific W21 canister thermal load cases selected to bound the range of normal, off-normal, and accident operating modes. The eight limiting cases considered in the thermal evaluation of the W21 canister within the storage cask include: normal storage (case 5), normal cold storage (case 6), normal hot storage (case 7), off-normal cold storage (case 8), off-normal hot storage (case 9), all vents blocked (case 11), canister transfer (case 13), and fire accident (case 15).

Canister temperatures during the other seven operating conditions listed in Table 4.1-1 of the FuelSolutions™ Storage System FSAR are bounded by one of these eight cases. Canister temperatures during vertical loading (cases 1 through 3) and during air pallet transfer (case 4) are bounded by the all vents blocked (case 11) condition when the vents are blocked and by the normal storage conditions (case 5) when the vents are open. The outlet vents blocked (case 10) condition is bounded by the transient analysis for all vents blocked (case 11), while the horizontal modes (cases 12 and 14) are bounded by the transient analysis for canister transfer (case 13).

For the determination of the maximum W21 canister thermal rating, only the normal hot storage condition (case 7) is evaluated. Although some short-term operating modes may result in steady-state temperatures at the thermal ratings that exceed allowable material temperatures, transient analyses of these short-term operating modes (i.e., all vents blocked, horizontal transfer) are performed. The results of these analyses are used to establish the operational *technical specification* limits contained in Section 12.3 of this FSAR. These *technical specification* limits are based on measured values of key cask response temperatures for these operating conditions. The W21 canister thermal ratings are applied concurrently with the thermal load cases in Table 4.1-2 to determine the temperature distribution within the W21 canister for each case.

4.1.4.2 W21 Canister within Transfer Cask

Similar to the storage cask, the various operating modes of the FuelSolutions™ W100 Transfer Cask create numerous combinations of thermal parameters for the W21 canister. The primary operating parameters influencing W21 canister thermal performance within the transfer cask

include location (inside, outside); orientation (vertical, horizontal); ambient temperature (-40°F, 0°F, 77°F, 100°F, 120°F, 125°F); annulus fluid (stagnant water, flowing water, air); top cover installation; bottom cover installation; liquid neutron shield fluid (water, air); W21 canister cavity (water, vacuum, helium, air); and solar radiation. The bounding W21 canister normal, off-normal, and accident thermal conditions within the transfer cask are summarized in Table 4.1-2 of the FuelSolutions™ Storage System FSAR.

Many of the twenty operating modes listed in Table 4.1-2 of the FuelSolutions™ Storage System FSAR are similar enough to other operating modes such that the associated thermal performance can be characterized by another bounding operating mode. Table 4.1-3 of this FSAR summarizes the ten design basis thermal load cases selected to bound the range of normal, off-normal, and accident operating modes for the W21 canister within the transfer cask. The design basis cases considered include: vacuum drying (case 6), cask handling (case 10), normal transfer (case 13), normal cold transfer (case 14), normal hot transfer (case 15), off-normal cold transfer (case 16), off-normal hot transfer (case 17), loss of neutron shield (case 18), canister reflood (case 19), and postulated fire accident (case 20).

For determination of thermal performance within the transfer cask, the system temperatures during loading and canister closure operations (cases 1 through 4) are bounded by the analyzed cask handling condition (case 10). The canister drain down operation is bounded by the analyzed vacuum drying condition (case 6). The annulus draining condition (case 7) is an accident scenario that is not allowed under the operating procedures for periods sufficient to reach steady-state conditions. As such, the transient temperatures under case 7 are also bounded by the case 6 design conditions. Conditions during canister inerting, vertical handling, and transfer (cases 8 through 11) are bounded by the analyzed handling condition (case 10). The thermal performance for the case 12 conditions for inside normal transfer is bounded by the analyzed normal transfer for outside conditions, case 13. A transient analysis (case 19) is performed at the W21 canister thermal rating to establish the boundary conditions for the canister reflood analysis presented in Section 4.4.2.

The maximum W21 canister thermal rating within the transfer cask is determined based on the steady-state normal hot condition (i.e., case 15) and the loss of neutron shield accident condition (i.e., case 18). The loss of neutron shield accident condition is considered for thermal rating qualification to assure that the safety basis of the canister design does not depend on water retention in the neutron shield.

Although the short-term allowable temperature for fuel cladding (i.e., 1058°F [570°C]) applies for operations in the transfer cask, the canister basket structural materials may not use higher short-term allowable temperatures if material strength properties are relied upon to resist structural loads postulated to occur within the respective operating mode or load combination (such as postulated transfer cask drop accidents). As a result, long-term allowable temperatures apply for canister structural components for all normal conditions of canister transfer. The off-normal and accident thermal conditions (i.e., vacuum drying, off-normal hot transfer, loss of neutron shield) are short duration conditions which do not need to be combined with an off-normal structural load condition. For these conditions, higher allowable material temperatures designated as short-term are established, as discussed in Section 4.3.1. Therefore,

only the normal hot transfer condition (case 15) is evaluated for determining the canister thermal rating during transfer.

4.1.5 Thermal Rating Summary

The W21 canister thermal rating in the storage and transfer casks is determined by applying the bounding canister axial heat flux profiles (Section 4.1.3) to the W21 canister within the storage cask and transfer cask steady-state thermal models under design basis ambient conditions (Section 4.1.2), for the design basis cask operating modes (Section 4.1.4). The canister maximum heat load rating (Q_{max}) and maximum linear heat generation rate ($LHGR_{max}$) are established when either a canister or a cask allowable material temperature is reached, as described in Sections 4.4.1 and 4.4.2 of this FSAR. A single canister thermal rating is established based on the thermal performance in the most limiting cask.

The maximum allowable material temperatures for the W21 canister are presented in Section 4.3.1, while spent fuel cladding allowable temperatures are presented in Section 4.3.2. The spent fuel cladding is the limiting material for long-term storage. Long-term fuel cladding allowable temperatures do not apply within the transfer cask. Although the long-term allowable fuel cladding temperature is dependent on PWR fuel burnup, as discussed in Section 4.3.2, a single thermal rating is established for the W21 canister based on a burnup level of 60 GWd/MTU. Since internal rod pressures and resultant stress levels decrease with decreasing burnup level, the allowable cladding temperature determined for 60 GWd/MTU burned PWR fuel bounds fuel with lower burnup levels.

The associated storage and transfer cask thermal ratings are presented to illustrate that the canister is the limiting component. In addition, a W21 canister thermal rating, which is based on the canister's structural material temperature limits, is presented to demonstrate that the allowable fuel cladding temperature controls the thermal rating of the canister. Cask thermal ratings are discussed further in Sections 4.4.1 and 4.4.2 of the FuelSolutions™ Storage System FSAR. The canister system temperatures under the various bounding cask operating modes are presented in Sections 4.3, 4.5, and 4.6 for normal, off-normal, and accident conditions, respectively.

4.1.6 Canister Internal Pressure Summary

The W21 canister is conservatively assumed to be pressurized due to a postulated release of fuel rod fill gas and fuel rod fission gas to the canister cavity, and due to the canister cavity backfill gas. As discussed in Chapter 8 of the FuelSolutions™ Storage System FSAR, the W21 canister is backfilled with helium during closure operations. The quantity in moles of inert gas needed for canister cavity backfill is determined in order to achieve 10 psig (1.68 atm) in the canister cavity under normal hot storage conditions (100°F ambient, Section 4.1.2) with 1% rod failures. The W21 canister normal, off-normal, and accident design pressures are presented in Table 4.1-5 for 45 GWd/MTU and 60 GWd/MTU burned PWR fuel with and without control components. The maximum W21 canister internal pressure is determined assuming rupture of 1%, 10%, and 100% of the fuel rods under normal, off-normal, and accident conditions, respectively. As discussed in the internal pressure evaluations in Sections 4.3, 4.5, and 4.6, pressure calculations conservatively assume the release of 100% of the rod fill gas and 30% of the rod fission gas for each postulated failed fuel rod.

The release of gas from PWR control components into the canister cavity is also considered for applicable W21 canister types and payloads. Similar to the fuel assemblies, 1% of the control component rods are conservatively postulated to fail for normal conditions of storage with 10% for off-normal conditions of storage and 100% for accident conditions of storage.

Table 4.1-1 - Bounding W21 Canister Heat Profile

Canister Location (Inches)	Max. Thermal for Q_{max} (1) (Dimensionless)	Max. Thermal Gradient for $LHGR_{max}$ (1) (Dimensionless)
0	0	0
10	0.6 (12")	0
20	0.803	0
30	1.018	0
40	1.081	0
50	1.095	0
60	1.094	0.40 (68.7")
70	1.092	0.65
80	1.090	1.03
90	1.088	1.092
100	1.086	1.095
110	1.083	1.094
120	1.077	1.087
130	1.060	1.082
140	0.996	1.061
150	0.800	0.875
160	0.60	0.65 (159.7")
170	0.4 (162")	0
182	0	0
192	0	0

Notes:

Refer to Section 4.1.3.2 for a discussion regarding the heat generation profile.

Table 4.1-2 - Design Basis Thermal Cases for W21 Canister within the Storage Cask

Case	Mode	FSAR Section	Ambient Temp. (°F)	W21 Cavity	Insolation by Surface Type & Orientation (BTU/hr-ft^2 (W/m^2))			Type of Analysis
					Top (Cask Vert.)	Sides (Cask Vert./Horiz.)	Top (Cask Horiz.)	
5	Normal Storage	4.4	77	He	123 (388)	62 (194)	N/A	Steady-State
6	Normal Cold Storage	4.4	0	He	0	0	N/A	Steady-State
7	Normal Hot Storage	4.4	100	He	123 (388)	62 (194)	N/A	Steady-State
8	Off-Normal Cold Storage	4.5	-40	He	0	0	N/A	Steady-State
9	Off-Normal Hot Storage	4.5	125	He	123 (388)	62 (194)	N/A	Steady-State
11	All Vents Blocked Accident	4.6	Pre-Event, 77	He	123 (388)	62 (194)	N/A	Steady-State
			During Event, 100		123 (388)	62 (194)	N/A	Transient
13a	Canister Horizontal Transfer (Loading)	4.5	Pre-Event, (Empty Cask) 100	He	123 (388)	62 (194)	N/A	Steady-State
			During Event, 100		N/A	62 (194)	31 (97)	Transient
13b	Canister Horizontal Transfer (Unloading)	4.5	Pre-Event, 77	He	123 (388)	62 (194)	N/A	Steady-State
			During Event, 100		N/A	62 (194)	31 (97)	Transient
15	Fire Accident	4.6	Pre-Event, 100	He	123 (388)	62 (194)	N/A	Steady-State
			During Event, 1475		0	0	N/A	Transient
			Post-Event 100		123 (388)	62 (194)	N/A	Transient

Table 4.1-3 - Design Basis Load Cases for W21 Canister within the Transfer Cask

Case	Mode	FSAR Section	Ambient Temp. (°F)	W21 Cavity	Insolation by Surface Type & Orientation (BTU/hr-ft^2 (W/m^2))			Type of Analysis
					Top (Cask Vert.)	Sides (Cask Vert./Horiz.)	Top (Cask Horiz.)	
6	Vacuum Drying	4.5	77	Vacuum	N/A	N/A	N/A	Steady-State
10	Cask Handling	4.4	77	He	N/A	N/A	N/A	Steady-State
13	Normal Transfer	4.4	77	He	N/A	62 (194)	31 (97)	Steady-State
14	Normal Cold Transfer	4.4	0	He	N/A	0	0	Steady-State
15	Normal Hot Transfer	4.4	100	He	N/A	62 (194)	31 (97)	Steady-State
16	Off-Normal Cold Transfer	4.5	-40	He	N/A	0	0	Steady-State
17	Off-Normal Hot Transfer	4.5	125	He	N/A	62 (194)	31 (97)	Steady-State
18	Loss of Neutron Shield	4.6	100	He	N/A	62 (194)	31 (97)	Steady-State
19	Canister Reflood	4.4	77	Air	N/A	N/A	N/A	Transient
20	Fire Accident	4.6	Pre-Event, 100	He	N/A	62 (194)	31 (97)	Steady-State
			During Event, 1475		N/A	0	0	Transient
			Post-Event, 100		N/A	62 (194)	31 (97)	Transient

Table 4.1-4 - FuelSolutions™ W21 Canister Thermal Rating for Storage[1]

Cooling Table	Axial Heat Profile	Q_{max} (kW)	$LHGR_{max}$ (kW/in)
0-60 GWd/MTU	Max. Thermal	22.0	0.161
	Max. Thermal Gradient	13.4	0.161
	Thermal Rating	**22.0**	**0.161**
W21 Basket Structure Thermal Rating		**25.1**	**0.184**
Storage and Transfer Cask Thermal Rating		28.0	0.253

Notes:

(1) The W21 canister thermal rating is set by the minimum heat load qualification in the storage and transfer casks. The W21 canister thermal rating is limited by the maximum allowable fuel cladding temperature. As shown above, the W21 canister structure can accommodate a higher thermal rating.

Table 4.1-5 - FuelSolutions™ W21 Canister Internal Pressures

	45 GWd/MTU PWR (psig)		60 GWd/MTU PWR (psig)	
Condition	**w/o Control Components**	**w/ Control Components**	**w/o Control Components**	**w/ Control Components**
Normal	10.0	10.0	10.0	10.0
Off-Normal (max.)	14.8	15.3	15.4	15.9
Accident (max.)	57.4	62.3	64.0	68.7

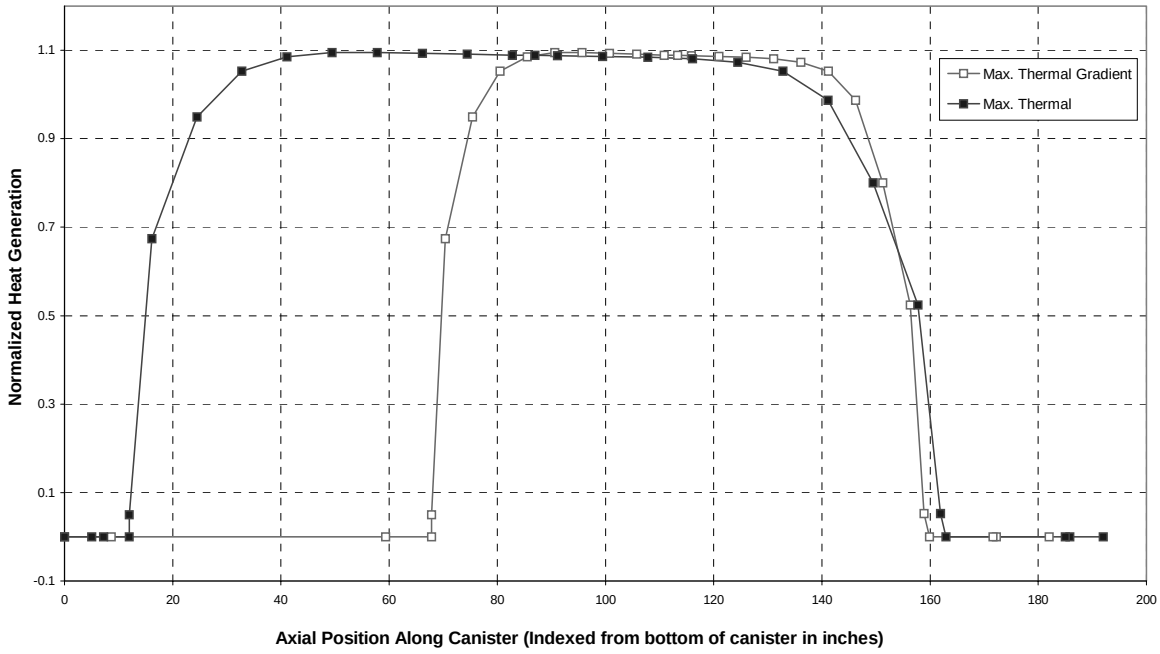

Figure 4.1-1 - Design Basis Axial Heat Profiles for W21 Canister Analysis

4.2 Summary of Thermal Properties of Materials

The analysis of the W21 canister heat transfer within the storage cask and the transfer cask requires that thermal properties be defined for the materials used in their fabrication. Table 4.2-1 tabulates the relevant thermal properties of the materials used in the fabrication of the FuelSolutions™ W21 canister. The materials used in the fabrication of the storage cask and the transfer cask are presented in the FuelSolutions™ Storage System FSAR. Table 4.2-2 of this FSAR provides a summary of the W21 canister material emissivity values used for radiation heat transfer analyses. Table 4.2-3 provides a summary of the fluid material properties used for thermal analysis.

The impact on heat transfer rates as a result of possible fission gas release from failed fuel rods was evaluated. While the evaluation showed that the thermal conductivity of the resulting gas mixture could be reduced by approximately 60% for the worst-case fission gas release, the other thermal properties of the gas mixture that affect convection within the canister will act to improve the heat transfer ability of the gas mixture. This beneficial impact of fission gas release on thermal performance has been conservatively ignored for the thermal analyses.

4.2.1 W21 Canister

The FuelSolutions™ W21 canister shell assemblies are fabricated from stainless steel and have DU, lead, or carbon steel shield plugs at both ends. The W21M basket assemblies contain spacer plates fabricated from stainless steel and carbon steel, while the W21T basket assembly spacer plates are fabricated from carbon steel. The basket guide tube assembly is fabricated with a stainless steel inner sleeve and outer wrapper, with a layer of BORAL® neutron absorbing material sandwiched between. The W21 basket support rods are fabricated of stainless steel. The W21M support sleeves are fabricated from stainless steel, while the W21T support sleeves are fabricated from carbon steel material. W21 top and bottom shield plugs are fabricated from DU, lead, or carbon steel. Further discussion of the FuelSolutions™ W21 canister design is provided in Section 1.2.1 of this FSAR.

4.2.2 PWR Fuel

The individual components of the PWR fuel assemblies are not discretely modeled; rather, the fuel assemblies are included as composite thermal masses with an effective radial thermal conductance based on the work of Manteufel and Todreas.[5] Specifically, the non-linear form of the lumped k_{eff}/h_{edge} model for a typical PWR assembly, as presented in Equations (31) and (32) and Table II of Manteufel and Todreas, is used. These equations relate the maximum temperature within the fuel assembly (T_M) to the temperature at the edge of the assembly (T_E) via the equation:

$$Q = 17.38(T_M - T_E) + 3.16 \times 10^{-8}(T_M^4 - T_E^4)$$

[5] Manteufel, R. D., and Todreas, N. E., *Effective Thermal Conductivity and Edge Conductance Model For A Spent-Fuel Assembly*, Nuclear Technology, Vol. 105, pp. 421-440, March 1994.

and from the edge of the assembly (T_E) to the temperature at the guide tube surface (T_W) via the equation:

$$Q = 64.0(T_E - T_W) + 3.83 \times 10^{-8}(T_E^4 - T_W^4)$$

where Q is in terms of watts and T_M, T_E, and T_W are in degrees Kelvin.

Before their use in the thermal model, the equation coefficients are modified to remove the assumed 1.2 peaking factor correction, since the effects of peaking factor are computed directly within the SINDA/FLUINT model, and to replace the assumed helium gas thermal conductivity of 0.2 W/m-K with a temperature-dependent value. Incorporation of these changes results in equations 1 and 2 becoming:

$$Q / \text{meter} = 7.122951 \bullet k_{Helium} \bullet (T_M - T_E) + 2.590164E-9(T_M^4 - T_E^4)$$

and

$$Q / \text{meter} = 26.22951 \bullet k_{Helium} \bullet (T_E - T_W) + 3.1393444E-9(T_E^4 - T_W^4)$$

where “Q/meter” represents the net heat transfer between the fuel assembly and a meter length of each guide tube wall. Axial conductance within the fuel assemblies is limited to that which will occur within the thickness of the zircaloy cladding.

The same correlation is assumed for either horizontal or vertical orientation of the fuel basket. No credit is taken for direct contact between the fuel assemblies and the guide tubes for either basket orientation. These equations are valid for the case where helium is used as the backfill gas. Since the above equations are for an active fuel length of 144 inches, the equations are scaled as needed to match the specific active fuel length of the fuel assembly being modeled.

The thermal mass of the fuel assembly used in the thermal analysis is determined by conservatively assuming a total assembly weight of 1065 pounds, an active fuel length of 144 inches, and an effective specific heat of 0.03 BTU/lbm-°F. These parameters are conservative for thermal mass determination and bound all fuel assemblies to be accommodated by the W21 canister.

Table 4.2-1 - W21 Canister Homogenous Material Properties (4 Pages)

Material	Temperature (°F)	Thermal Conductivity (BTU/hr-ft-°F)	Density[1] (lb/ft^3)	Specific Heat (BTU/lb-°F)
Type 304 Stainless Steel [2]	-40	8.2[6]	503	0.111[6]
	70	8.6		0.113
	100	8.7		0.114
	200	9.3		0.119
	300	9.8		0.122
	400	10.4		0.125
	500	10.9		0.127
	600	11.3		0.129
	700	11.8		0.131
	800	12.2		0.132
	900	12.7		0.134
	1000	13.2		0.135
Type 316 Stainless Steel[2]	-40	6.9[6]	502	0.110[6]
	70	7.7		0.114
	100	7.9		0.116
	200	8.4		0.119
	300	9.0		0.124
	400	9.5		0.125
	500	10.0		0.128
	600	10.5		0.129
	700	11.0		0.131
	800	11.5		0.132
	900	12.0		0.134
	1000	12.4		0.134
Type XM-19 Stainless Steel[2]	-40	5.7[6]	494	0.103[6]
	70	6.4		0.113
	100	6.6		0.115
	250	7.4		0.121
	400	8.2		0.126
	600	9.3		0.132
	700	9.9		0.135
	800	10.4		0.136
	900	10.9		0.137
	1000	11.4		0.138

Table 4.2-1 - W21 Canister Homogenous Material Properties (4 Pages)

Material	Temperature (°F)	Thermal Conductivity (BTU/hr-ft-°F)	Density[1] (lb/ft^3)	Specific Heat (BTU/lb-°F)
SA-564	-40	9.2[6]	487	0.101[6]
Grade 630	70	9.9		0.108
Stainless Steel	150	10.4		0.113
(17-4 PH)[2]	250	10.9		0.118
	400	11.7		0.126
	500	12.2		0.132
	600	12.7		0.137
	700	13.2		0.146
	800	13.5		0.154
	900	13.7		0.163
	1000	13.8		0.177
A-514/SA-517	-40	21.1[6]	501	0.096[6]
Grade P	70	21.8		0.103
Carbon	150	22.3		0.109
Steel[2]	250	22.4		0.115
	350	22.4		0.120
	400	22.3		0.122
	500	22.0		0.127
	600	21.5		0.132
	800	20.4		0.143
	1000	19.2		0.157
A-514/SA-517	-40	19.8[6]	501	0.097[6]
Grade P	70	21.3		0.105
Carbon	150	22.2		0.111
Steel[2]	250	22.9		0.117
	350	23.3		0.123
	400	23.3		0.125
	500	23.1		0.130
	600	22.7		0.135
	800	21.6		0.149
	1000	20.2		0.167

Table 4.2-1 - W21 Canister Homogenous Material Properties (4 Pages)

Material	Temperature (°F)	Thermal Conductivity (BTU/hr-ft-°F)		Density[1] (lb/ft^3)	Specific Heat (BTU/lb-°F)
A36	-40	22.9[6]		489	0.096[6]
Carbon	70	23.6			0.106
Steel[2]	200	24.4			0.118
	300	24.4			0.123
	400	24.2			0.128
	500	23.7			0.133
	600	23.1			0.136
	700	22.4			0.143
	800	21.7			0.149
	900	20.9			0.156
	1000	20.0			0.165
Lead[3]	-58	21.7		708	0.030
	32	20.4			0.030
	81	20.0			
	158	19.9			0.031
	248				0.032
	261	19.4			
	338				0.032
	428	18.4			0.033
	608				0.033
	621	16.4			
	698				0.051
	833	10.1			
BORAL®[4]		Through	Axial		
	-40	59.7[6]	63.2[6]	160	0.191[6]
	77	59.0	64.2		0.217
	212	58.1	65.3		0.246
	392	58.5	66.8		0.271
	482	58.3	67.1		0.280
	572	58.1	67.4		0.288
	662	57.7	67.4		0.293
	752	57.3	67.3		0.298
	842	56.2	66.4		0.304
	932	55.2	65.5		0.308
	1472	48.9[6]	60.1[6]		0.329[6]

Table 4.2-1 - W21 Canister Homogenous Material Properties (4 Pages)

Material	Temperature (°F)	Thermal Conductivity (BTU/hr-ft-°F)	Density[1] (lb/ft^3)	Specific Heat (BTU/lb-°F)
Depleted Uranium[5]	68	14.6	1183	0.028
	140	15.0		0.028
	437	17.5		0.031
	824	19.3		0.038

Notes:

(1) Single values are shown for homogeneous material density since this material property does not vary significantly with temperature.

(2) Material properties are obtained from ASME Boiler and Pressure Vessel Code, Section II, Part D, 1995 Edition.

(3) Touloukian, Y.S., *Thermal Conductivity - Metallic Elements and Alloys*, Thermophysical Properties of Matter, the TPRC Data Series, Vol. 1, 1970.

(4) AAR, *Standard Specification for BORAL® Composite Sheet*, AAR Advanced Structures (see Section 1.5.1 of this FSAR).

(5) General Electric, *Properties of Solids, Thermal Conductivity, Metallic Materials*, Heat Transfer Division, July 1974.

(6) Extrapolated value.

Table 4.2-2 - W21 Canister Surface Emissivities

Material	Conditions	Emissivity (ε)
304 and XM-19 Stainless Steel[1, 2]	slightly oxidized, < 250°F	0.30[1]
	slightly oxidized, 250-500°F	0.40
	oxidized, > 500°F	0.45
316 Stainless Steel[1, 2]	slightly oxidized, < 250°F	0.30
	slightly oxidized, 250-500°F	0.40
	oxidized, > 500°F	0.45
SA-564 Grade 630 Stainless Steel (17-4 PH)[1]	as-received, < 600°F	0.40[1]
A36 and A-514/SA-517 Grades F and P Carbon Steel[1, 3]	Electroless nickel plated	0.11

Notes:

(1) Gubareff, G.G., Janssen, J.E., and Torborg, R.H., *Thermal Radiation Properties Survey*, 2nd Edition, Honeywell Research Center, 1960.

(2) Frank, R. C., and Plagemann, W.L., *Emissivity Testing of Metal Specimens.* Boeing Analytical Engineering coordination sheet No. 2-3623-2-RF-C86-349, August 21, 1986.

(3) Siegel, R., and Howell, J.R., *Thermal Radiation Heat Transfer*, 3rd Edition, Hemisphere Publishing Corporation, Washington, D. C., 1992.

Table 4.2-3 - W21 Canister Material Properties, Fluids

Material	Temp. (ºF)	Thermal Conductivity (BTU/hr-ft-°F)	Specific Heat (BTU/lb-°F)	Density (lb/ft^3)	Prandtl No.	Expansion Coefficient (1/K)	Viscosity (centipoise)
Air[1, 2, 3]	-99	0.010	0.239	Use ideal gas law			0.01336
	81	0.015	0.240				0.01853
	261	0.019	0.242				0.02294
	441	0.023	0.246				0.02682
	621	0.026	0.251				0.03030
	801	0.030	0.257				0.03349
	981	0.033	0.262				0.03643
	1161		0.267				0.03918
Helium[4, 5, 6]	-99	0.067	1.239	Use ideal gas law			0.0150
	81	0.087					0.0199
	261	0.104					0.0243
	441	0.122					0.0283
	621	0.143					0.0320
	801	0.161					0.0355
	981	0.177					0.0388
	1161	0.194					0.0420
Liquid Water[7]	32	0.329	1.007	62.44	12.99	-68.05e-6	1.750
	81	0.354	0.998	62.25	5.83	276.1e-6	0.855
	126	0.373	0.999	61.63	3.42	471.2e-6	0.528
	171	0.386	1.002	60.75	2.29	624.2e-6	0.365
	212	0.393	1.007	59.82	1.76	750.1e-6	0.279

Notes:

(1) Rohsenow, Hartnett, and Ganic, *Handbook of Heat Transfer Fundamentals*, 2nd edition, McGraw-Hill Publishers.

(2) Kreith, F., *Principles of Heat Transfer*, 3rd Edition, Harper & Row Publishers.

(3) Eckert, E. R.G., and Drake, Jr., R.M., *Analysis of Heat and Mass Transfer*, McGraw-Hill Book Company, New York, 1972.

(4) Touloukian, Y.S., *Specific Heat - Nonmetallic Liquids and Gases*, Thermophysical Properties of Matter, the TPRC Data Series, Vol. 6, 1970.

(5) Touloukian, Y.S., *Thermal Conductivity - Nonmetallic Liquids and Gases*, Thermophysical Properties of Matter, the TPRC Data Series, Vol. 3, 1970.

(6) Touloukian, Y.S., *Viscosity - Nonmetallic Liquids and Gases*, Thermophysical Properties of Matter, the TPRC Data Series, Vol. 11, 1970.

(7) Incropera, F.P., and Dewitt, D.P., *Fundamentals of Heat and Mass Transfer*, 3rd Edition, John Wiley & Sons, New York, 1990.

4.3 Specifications for Components

4.3.1 W21 Canister

The materials used in the FuelSolutions™ W21 canister that are considered temperature sensitive are the zircaloy cladding on the SNF assembly rods, the BORAL® neutron absorbing material, and the canister structural components. Allowable material temperatures for W21 canister components are presented in Table 4.3-1 of this FSAR.

The BORAL® manufacturer's recommended maximum long-term service temperature is 850°F. For short-term operations, service temperatures up to 1,000°F are permitted.

In accordance with Section III of the ASME B&PV Code,[6] the maximum allowable temperatures of the canister materials are limited to 800°F for austenitic stainless steel (e.g., Type 304, 316, and XM-19), 700°F for carbon steel (A36, SA-517 Grades F and P, and A514 Grades F and P), and 650°F for SA-564, Grade 630 precipitation-hardened stainless steel. These allowable temperatures are applied to the canister materials for all normal design conditions. Short-term elevated temperatures in excess of these allowable values may occur during fabrication, loading operations, off-normal transfer, or accident storage conditions in which a postulated cask drop accident is not credible or need not be combined with another accident condition. Both carbon and stainless steel have a melting point well above 2500°F (1371°C).[7] As shown in ASME Code Case N-47-33,[8] the strength properties of steels do not change due to short-term exposure up to 1,000°F. Therefore, short-term exposure to the temperatures of this magnitude does not have any significant effect on mechanical properties of the basket assembly materials. Additionally, United States Steel brochure, "*Steels for Elevated Temperature Service*,"[9] provides tested material properties for the A-514/SA-517, Grades F and P material up to 1900°F, without significant effect on mechanical properties. Therefore, a maximum allowable short-term temperature of 1000°F is applied for canister structural stainless steel and carbon steel materials.

The depleted uranium and lead components have melting points of 2071°F[10] and 620°F,[11] respectively. However, since these materials are used in sealed shield plugs and are not relied upon as structural members, the associated material melting point becomes the allowable material temperature.

---

[6] ASME Boiler and Pressure Vessel Code, Section III, Division 1 - Subsections NB and NG, 1995 Edition.

[7] ASME Boiler and Pressure Vessel Code, Section II, Part D, 1995 Edition.

[8] Case N-47-33, *Class 1 Components in Elevated Temperature Service*, American Society of Mechanical Engineers (ASME) Boiler and Pressure Vessel Code, 1995 Code Cases, Nuclear Components, 1995 Edition.

[9] "Steels for Elevated Temperature Service," United States Steel Corporation, 600 Grant Street, Pittsburgh, PA 15230.

[10] *Material Engineering*, Penton Publishing, December 1991.

[11] Avallone, E.A., and Baumeister III, T., *Mark's Standard Handbook for Mechanical Engineers*, 9th Edition, McGraw-Hill Book Company, New York, 1987.

4.3.2 Fuel Cladding Allowable Temperatures

This section presents the methodology for long-term allowable cladding temperature determination at various fuel burnup levels. This method is designed to determine allowable long-term cladding temperatures, which is the primary means used to assure integrity of fuel assembly cladding during dry storage. The calculation method is based on cladding degradation due to material creep behavior, which is a result of more recent testing for spent fuel with burnups to 60 GWd/MTU (herein referred to as the "creep methodology").

The allowable cladding temperatures determined using the creep methodology presented in this section apply only to zircaloy-clad commercial LWR fuel. It should also be noted that the applicability of the creep methodology to stainless steel clad fuel has not been established. Qualification of stainless steel clad fuel in the FuelSolutions™ W21 canister is not currently being sought.

The creep methodology is in accordance with 10CFR72.72(h)[1] and NUREG-1536,[12] wherein the FuelSolutions™ Storage System is designed to prevent degradation of fuel cladding that results in gross cladding failure throughout the entire storage life. Gross cladding failure can be characterized as a type of cladding breach, such as axial splits or ductile fracture, where irradiated UO_2 particles may be released, as described in Section 2.2 of this FSAR. The design intent is to avoid cladding rupture and maintain sufficient cladding structural integrity to allow handling at the end of storage life.

Both UCID-21181[13] and EPRI Report TR-103949[14] agree that the SNF cladding allowable temperature for dry storage should be determined primarily by the creep properties of the cladding.

Extensive cladding creep testing of moderate and high burnup spent fuel assemblies has been performed at simulated dry storage temperature and stress conditions and documented in various reports published internationally within the nuclear industry. Westinghouse has developed mathematical correlations based on this test data which are used for development of a creep-based methodology for the determination of allowable peak cladding temperature during dry storage.[15]

The evaluation of nondestructive and destructive post-irradiation examinations conducted on Westinghouse PWR fuel rods has established that high burnup fuel retains sufficient material properties after irradiation to high burnups (60 GWd/MTU) to allow safe dry storage. Observed net fission gas release fractions for commercial PWR fuel are significantly lower than the 30% NUREG-1536 guidance. Although cladding hydriding increases with increasing oxide layer thickness, hydriding does not significantly reduce the ductility of high burnup cladding. Stresses

---

[12] NUREG-1536, *Standard Review Plan for Dry Cask Storage Systems*, U.S. Nuclear Regulatory Commission, January 1997.

[13] UCID-21181, *Spent Fuel Cladding Integrity during Dry Storage*, Lawrence Livermore National Laboratory, September 1987.

[14] EPRI TR-103949, *Temperature Limit Determination for the Inert Dry Storage of Spent Nuclear Fuel*, Electric Power Research Institute, May 1994.

[15] WCAP-15168, *Dry Storage of High Burnup Spent Nuclear Fuel*, Westinghouse Electric Company, March 1999.

induced from pellet-cladding interaction at operating conditions are not a concern during dry storage conditions. Cladding strength increases with increasing burnup while cladding ductility decreases. Both effects are attributed to radiation embrittlement, which reaches saturation at approximately 48 GWd/MTU).[15]

4.3.2.1 Cladding Temperature Decay

Peak cladding temperature will decrease over the storage period due to reductions in the heat load caused by radioactive decay of fission products. SNF with higher burnup levels has a proportionally higher percentage of long-lived radionuclides, which decay slower than short-lived radionuclides. As a result, the canister heat load and corresponding peak cladding temperature will decrease more slowly over the storage period for higher burned fuel. Because cladding creep depends upon time at temperature, higher burned fuel has a lower allowable initial cladding temperature. The W21 canister is qualified with a single thermal rating for up to a maximum burnup level of 60 GWd/MTU (see Table 4.1-5), and the creep methodology is used to support burnups to 60 GWd/MTU.

The peak and average cladding temperature decay curves depend upon the canister-specific heat load versus temperature and the decay heat reduction over the storage period. The W21 canister heat load versus temperature curves shown in Figure 4.3-1 are developed using the W21 canister thermal model for the normal hot storage conditions described in Section 4.4.1.1. The canister heat load decay over the storage life depends on the PWR fuel burnup level. Decay heat curves for PWR fuel are presented in Figure 4.3-2.

The applicable heat load decay curve (Figure 4.3-2) is entered graphically with the calculated assembly-specific heat load (kW/MTU) to determine the post-irradiation time (years) necessary to achieve the heat load for each burnup level. The post-irradiation time and rod temperatures corresponding to the heat load from Figure 4.3-1 are then plotted to determine the temperature decay curves at each burnup level. Figure 4.3-3 presents the peak cladding temperature decay curves for 45 and 60 GWd/MTU burned PWR fuel. Similarly, Figure 4.3-4 presents the peak rod average gas temperature decay curves for 45 and 60 GWd/MTU burned PWR fuel. These temperature decay curves are used as input to the creep methodology equations presented later. A 100-year storage life is assumed for the creep methodology.

4.3.2.2 Fuel Rod Pressure and Hoop Stress

Determination of the long-term allowable cladding temperature using the creep methodology is largely dependent on the cladding stress. Under dry storage conditions, the primary concern is development of cladding hoop stress due to the rod internal pressure. Fuel rod internal pressure is influenced by the initial inert gas backfill, generation of fission gas, rod internal free volume, and peak rod average gas temperature. As presented in Section 4.4.1.7, the generation of fission gas is dependent upon burnup. As the fuel burnup increases, the internal rod free volume decreases due to fuel pellet swelling and cladding diametrical creepdown, which is caused by the differential pressure between fuel rod internal pressure and the reactor operating pressure. Fission gas generation and void volume reduction contribute to increasing internal rod pressures with increasing burnup level.

Simple and conservative methods have been developed to calculate the maximum cladding stresses in PWR fuel rods stored in the FuelSolutions™ W21 canister. The methods account for

the rod pressure at end-of-life operating conditions and apply to generic calculations for the maximum cladding stresses of non-IFBA (Integral Fuel Burnable Absorber) PWR fuel rod designs. Validation of the simple methods for calculating the maximum clad stresses has been accomplished by comparison of the simple method results to the Westinghouse PAD fuel rod thermal performance code results. For some fuel types, more accurate but still conservative values for the maximum cladding stresses have been calculated using the PAD results for the rod pressures at the limiting W21 canister conditions.

The values used for the core average linear power, coolant inlet temperature, and coolant mass flow rate for the fuel designs are selected to maximize the value calculated for the PWR rod pressures at dry storage conditions in the FuelSolutions™ Storage System. The values that maximize the calculated pressure at dry storage conditions are not the same as those that maximize the rod pressure at end-of-life (EOL) operating conditions. The basis of the calculations in CMPC.1505.011[16] is that the design and safety analyses for the operation of the fuel to be stored in the FuelSolutions™ canisters show that the EOL rod pressure is more than the Reactor Coolant System (RCS) pressure at plant operating conditions, either because this was the licensing basis for the operation of the fuel or through the explicit design and safety analyses for licensing the fuel for operation. Under these conditions, replacing the rod pressure at EOL operating conditions with the RCS pressure is a conservative limiting assumption for the calculation of the rod pressure at dry storage conditions. This assumption has the further advantage that it eliminates the need to perform explicit calculations for the rod pressure at EOL operating conditions for the many different fuel rod designs, PWR operating conditions, and PWR operational fuel management strategies covered by the generic calculations.

As an added conservatism in calculating PWR rod pressures for evaluating cladding stress at dry storage conditions in the FuelSolutions™ Storage System, no time-dependent corrections have been made to the spent fuel rod pressures to account for the net loss of fission gas through radioactive decay.

Based on the high burnup rod testing and the Westinghouse fuel code (PAD) runs, more realistic rod pressures are applied for the creep method rod stress calculations for fuel assemblies with burnups up to 60 GWd/MTU. The maximum EOL pressure at operating conditions is assumed to be the RCS pressure.[17] Fission gas release and fuel dimensional changes due to irradiation and operation are accounted for in the fuel rod design calculations, which are performed to verify that a fuel assembly meets its design pressure.

Consistent with EPRI Report TR-103949,[14] the fuel rod pressure varies with average fuel rod gas temperature by the ideal gas law. The average fuel rod gas temperature is determined using the W21 canister thermal model presented in Section 4.4.1.1 for normal hot storage conditions. The peak rod average gas temperature is calculated as a weighted average of the fuel cladding temperature over the active fuel length and gas plenum region.

---

[16] CMPC.1505.011, *PWR Fuel Cladding Stresses During Dry Storage*, Wesflex™ Spent Fuel Management System, Revision 1.

[17] *World Nuclear Industry Handbook*, supplement to Nuclear Engineering International, November, 1998.

Once in dry storage, the fuel rod internal pressure varies only with peak rod average gas temperature. As shown in Figure 4.3-4, the peak rod average gas temperature decays significantly over the storage lifetime.

From PNL-6189,[18] the cladding hoop stress can be determined from the fuel assembly parameters as follows:

$$\sigma_{\infty} = \frac{\Delta P D_{mid}}{2t}$$

where:

σ_{∞}	=	Cladding mid-wall hoop stress
ΔP	=	Differential pressure across fuel cladding
D_{mid}	=	Cladding mid-wall diameter (fuel assembly specific)
t	=	Cladding wall thickness (fuel assembly specific)

Fuel rod cladding thickness is reduced due to waterside cladding oxidation. From PNL-4835,[19] PWR cladding oxide layer thickness ranges from 1 to 100 μm. For conservatism, an oxide layer of 100 μm is assumed for all PWR rod stress calculations.

Cladding baseline hoop stress and peak rod average gas temperatures are presented in Table 4.3-2 for PWR fuel with burnups to 60 GWd/MTU. These baseline stresses and temperatures are used for determination of allowable cladding temperature.

4.3.2.3 Long-Term Allowable Cladding Temperature

Creep Methodology Correlation

The cladding creep correlation presented in WCAP-15168[15] is used with one conservative exception. The creep methodology cladding strain formulas are based on the behavior of unirradiated zircaloy cladding. The calculated unirradiated strain values are then adjusted downward by a Spilker correction factor to determine strain values for irradiated cladding. This adjustment factor is based on a comparison of measured strain rates for irradiated and unirradiated zircaloy cladding. A cladding strain (Spilker) reduction factor of “2” is used for these calculations in lieu of the factor used in WCAP-15168.

As such, the modified WCAP-15168 method is used to determine the allowable cladding temperature for the PWR fuel classes which may be accommodated by the W21 canister. Both moderate and high burnup levels are considered. The creep correlation includes the following equation:

$$\varepsilon = At^{m}$$

[18] PNL-6189, *Recommended Temperature Limits for Dry Storage of Spent Light Water Reactor Zircaloy-Clad Fuel Rods in Inert Gas*, Pacific Northwest Laboratory, May 1987.

[19] PNL-4835, *Technical Basis for Storage of Zircaloy-Clad Spent Fuel in Inert Gases*, Pacific Northwest Laboratory, September 1983.

where:

ε = strain

A = initial strain

t = storage time

The term m is defined as:

$$m = c_1 + c_2 T_f + c_3 T_f^{\,2} + \ldots + c_{11} T_f^{\,10}$$

where:

c_1 to c_{11} = correlation constants (WCAP-15168,[15] Table 4-2)

$$T_f = T(^\circ C) + (\sigma - 80)\left(45/70\right)$$

and:

σ = Hoop stress. Note: The hoop stress is determined by a ratio of the baseline stress and temperature (Table 4.3-2) to the peak rod average gas temperature (Figure 4.3-4).

T = Peak cladding temperature (from Figure 4.3-3).

The peak cladding temperature which corresponds to a calculated cladding strain of 1% at the end of the 100-year dry storage period is the maximum allowable cladding temperature for the given burnup level and fuel assembly type. The maximum allowable cladding temperatures, determined using the creep correlation for moderate and high burnup PWR fuel types, are presented in Table 4.3-3.

Bounding Long-term Allowable Cladding Temperature

For conservatism, the lowest calculated allowable cladding temperature presented in Table 4.3-3 is selected as the acceptance basis for the allowable cladding temperature for dry storage in a FuelSolutions™ W21 canister presented in Table 4.3-1. The lowest calculated allowable cladding temperature (350.0°C) corresponds to the B&W 15x15 assembly class with high burnup (60 GWd/MTU). This allowable temperature bounds all PWR fuel assembly classes and burnup levels to be accommodated in the W21 canister. It should be noted that the B&W 15x15 assembly bounds all PWR fuel because of the unrealistically conservative method used to calculate its rod stresses; most of the Westinghouse fuel stresses were lower due to the use of pressures calculated with the PAD fuel rod thermal performance code, as described earlier.

4.3.2.4 Short-Term Allowable Cladding Temperature

The short-term allowable cladding temperature is established as 570°C.[19] In order to confirm that this short-term allowable cladding temperature is valid for burnups above 28 GWd/MTU (as specified in NUREG-1536[12]), the worst case rod stress is calculated using WE 14x14 assembly rod dimensions under 60 GWd/MTU burnup conditions for peak internal pressure and cladding oxidation. This calculated maximum cladding stress is compared with the tabulation of failure mode observations presented in EPRI Report TR-103949.[14]

$$\sigma_{\infty} = \frac{P\,D_{mid}}{2t} = \frac{(30.7\,MPa)(0.4053in)}{2(0.0187in)} = 333\,MPa$$

where:

P = $(3500\,psi)\dfrac{(570^{\circ}C + 273K)}{(387^{\circ}C + 273K)}\left(\dfrac{6894.75\,Pa}{psi}\right)\left(\dfrac{MPa}{10^{6}\,Pa}\right) = 30.7\ MPa$

D_{mid} = 0.424 in - 0.0187 in = 0.4053 in

t = (0.0225 in)(1-.17)=0.0187 in

The maximum short-term cladding stress calculated above (333 MPa) is conservative due to the conservatism of the 60 GWd/MTU rod pressure, the 10CFR50 cladding oxidation limit (17%), and the use of peak rod temperature for the rod pressure calculation instead of the average rod temperature.

Regardless, the calculated maximum short-term cladding stress is lower than the average rod stress (395 MPa) reported in EPRI Report TR-103949,[14] Table A-1, for stress-rupture observations of irradiated zircaloys. Additionally, no rod failures were reported by PNL-4835[19] for rods tested up to 570°C, and only pinhole defects (no gross failures) were observed for unirradiated rods tested up to 800°C. This provides additional assurance that the 570°C short-term allowable temperature is conservative, and that no gross cladding failures will occur if short-term temperatures are maintained below this value.

This short-term allowable cladding temperature applies during all FuelSolutions™ canister thermal accident conditions within the transfer cask (i.e., loss of neutron shield, fire) and the storage cask (i.e., all vents blocked, fire).

It is not feasible to uniquely define the effects on creep associated with changes in hydriding and annealing characteristics of Zircaloy-2 and Zircaloy-4 fuel assembly cladding during dry storage if the necessary loading cycle operations prior to initiating dry storage entail lengthy periods with temperatures above 400°C (752°C). Therefore, the maximum allowable fuel cladding temperature is limited to 400°C during fuel loading and storage operations for normal and off-normal conditions to assure that the total cladding creep is less than 1%.

Table 4.3-1 - W21 Canister Component Allowable Temperatures

Component	Max. Temperature (°F)	Max. Short-term[1] (Off-Normal) Temperature (°F)
PWR Fuel Cladding (0-60 GWd/MTU)	662 (350.0°C)	752 (400°C)[2] 1058 (570°C)
Load Bearing Carbon Steel	700	1000
Load Bearing Stainless Steel	800	1000
Lead Shielding	620	620
DU Shielding	2071	2071
BORAL®	850	1000

Notes:

(1) Short-term allowable temperatures apply under conditions when storage cask or transfer cask drop accidents are not postulated or included in the load combination. Material allowables taken from Table 2.0-2 of the FuelSolutions™ Storage System FSAR.

(2) The 400°C limit applies to normal and off-normal conditions; the 570°C limit applies to accident conditions.

Table 4.3-2 - Baseline PWR Rod Stress and Peak Rod Average Gas Temperature

PWR Fuel Class	PWR Fuel Burnups Up to 60 GWd/MTU	
	Rod Stress (MPa) [1]	Peak Rod Average Gas Temp. (°C)
WE 14x14	109.14	288.7
Yankee Rowe	98.41	288.7
WE 15x15	109.14	288.7
CE 14x14	108.97	288.7
WE 17x17	109.59	288.7
B&W 15x15	112.66	288.7
Fort Calhoun	102.08	288.7
Palisades	102.78	288.7
B&W 17x17	110.59	288.7
CE 16x16	105.73	288.7
CE 16x16 System 80	105.73	288.7
St. Lucie 2	106.64	288.7

Notes:

(1) All rod stresses are based on burnups of up to 60 GWd/MTU, a peak rod average gas temperature of 288.7°C, an oxide layer thickness of 100 μm (4 mils), and an oxide-to-metal ratio of 1.7. Stresses have been adjusted to an oxide-to-metal ratio of 1.56.

Table 4.3-3 - SNF-Specific Allowable Cladding Temperatures

Canister/Fuel Class	Allowable Cladding Temperature (°C) [1]	
	Creep Correlation (60 GWd/MTU) [1]	CSFM Method (For reference, only)[2]
WE 14x14	352.2	378.0
Yankee Rowe	358.9	382.5
WE 15x15	352.2	377.0
CE 14x14	352.3	377.0
WE 17x17	351.9	377.5
B&W 15x15	350.0	375.0
Fort Calhoun	356.6	380.0
Palisades	356.1	380.0
B&W 17x17	351.3	376.5
CE 16x16	354.3	378.5
CE 16x16 System 80	354.3	378.5
St. Lucie 2	353.8	378.0

Notes:

(1) As presented in Table 4.3-1, 350.0°C is conservatively used for the long-term fuel cladding temperature allowable for PWR fuel in the W21 canister.

(2) CSFM method calculation results are for five-year cooled fuel.

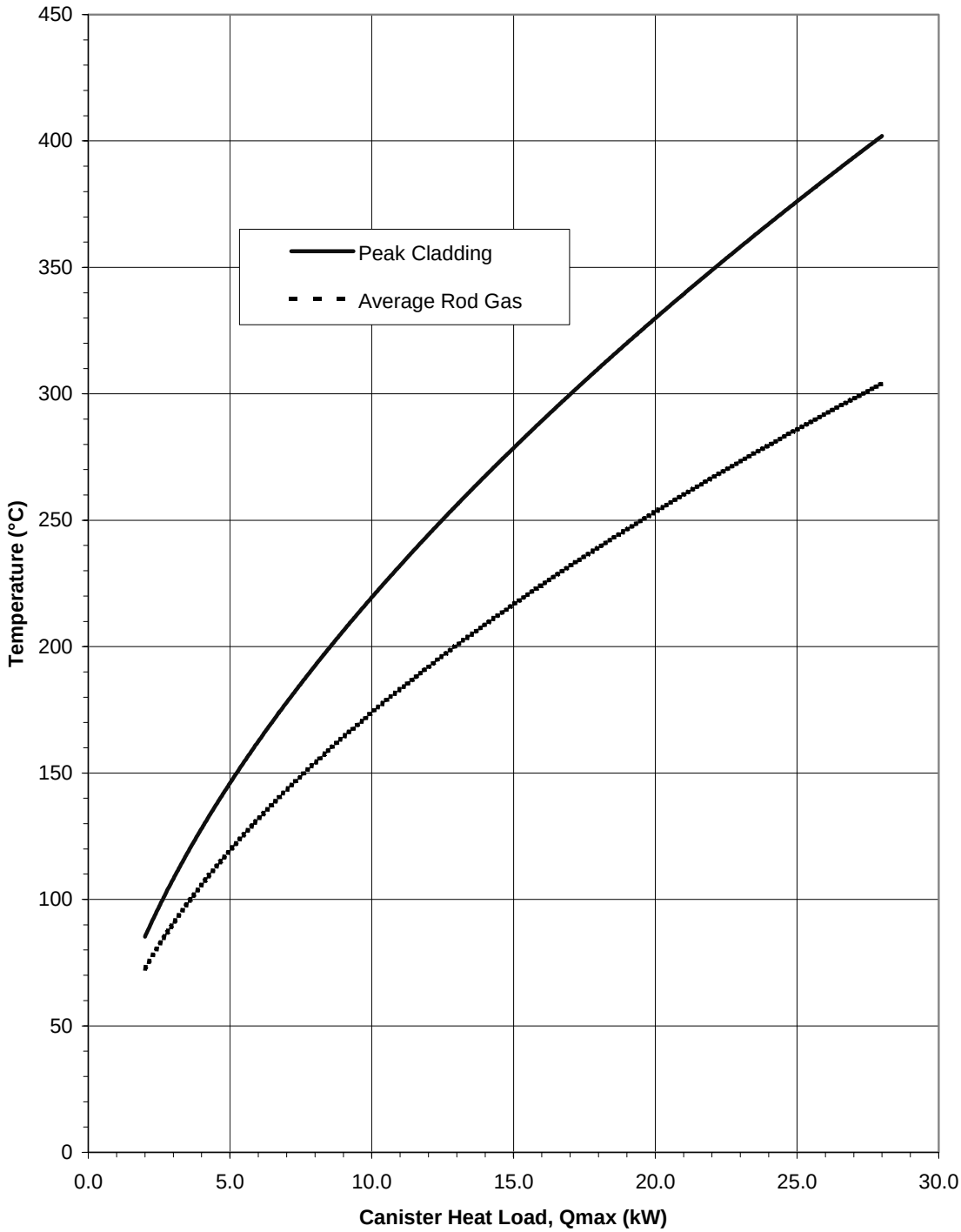

Figure 4.3-1 - W21 Canister Heat Load (Q_{max}) vs. Temperature

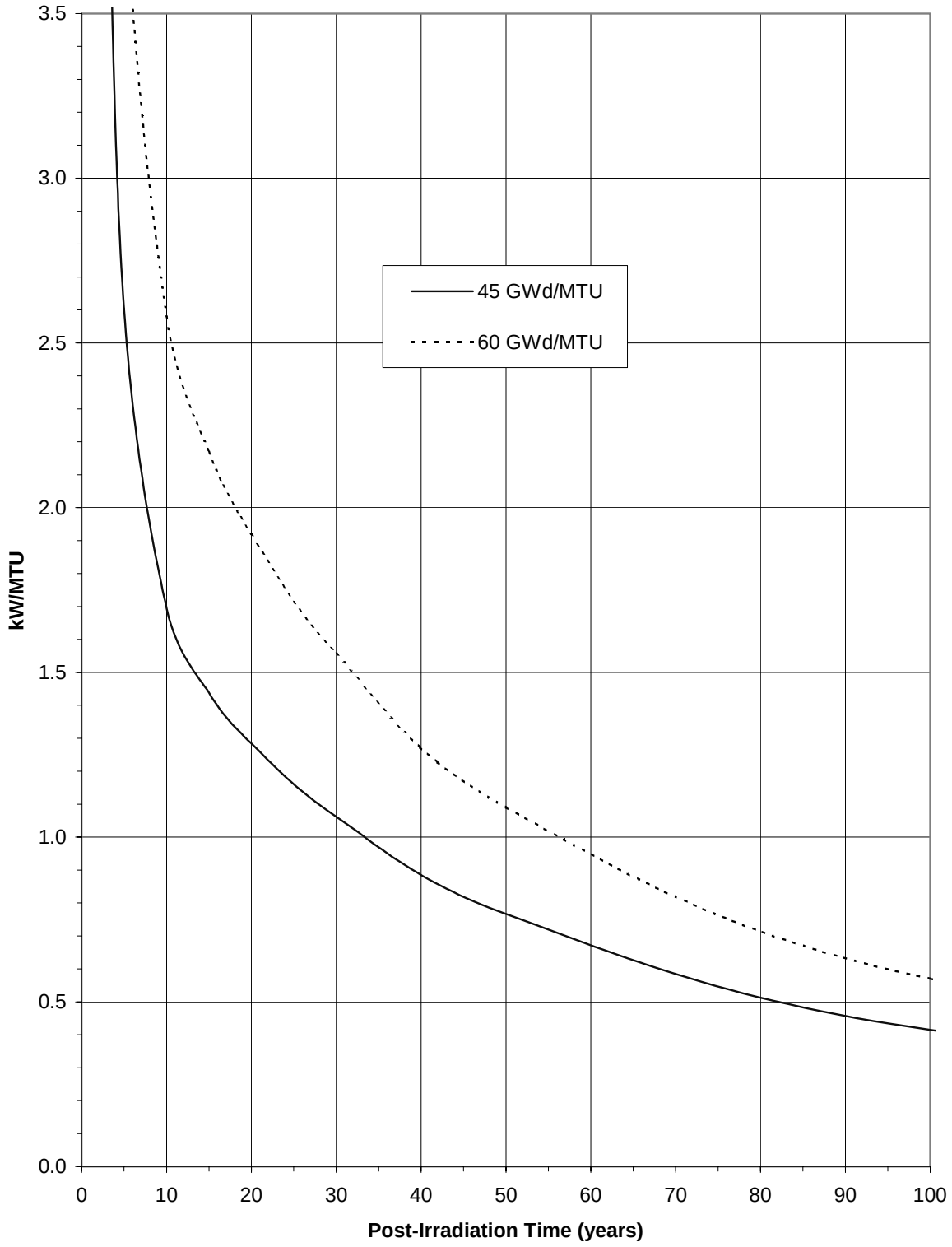

Figure 4.3-2 - PWR Fuel Decay Heat Curve

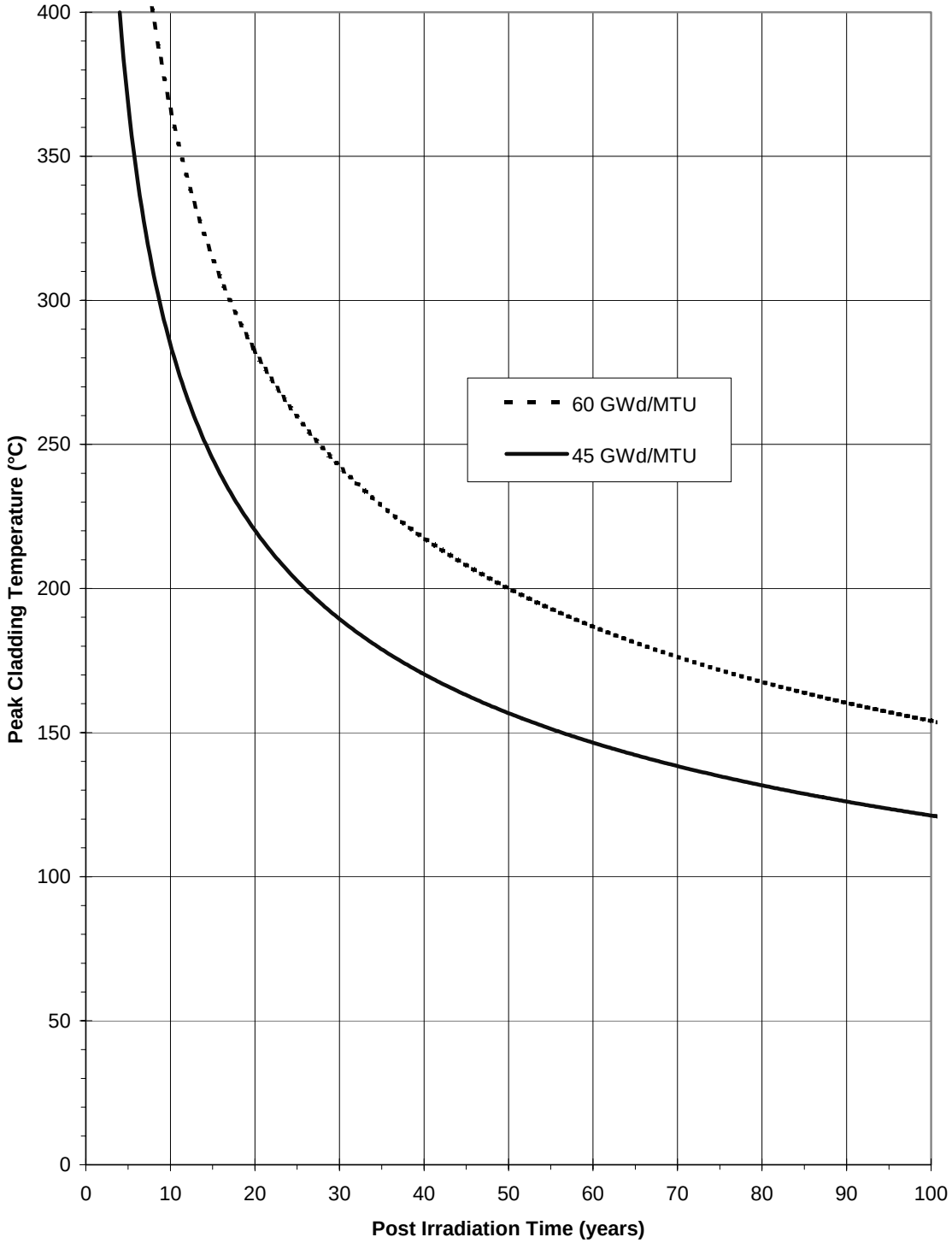

Figure 4.3-3 - PWR Fuel Peak Cladding Temperature Decay

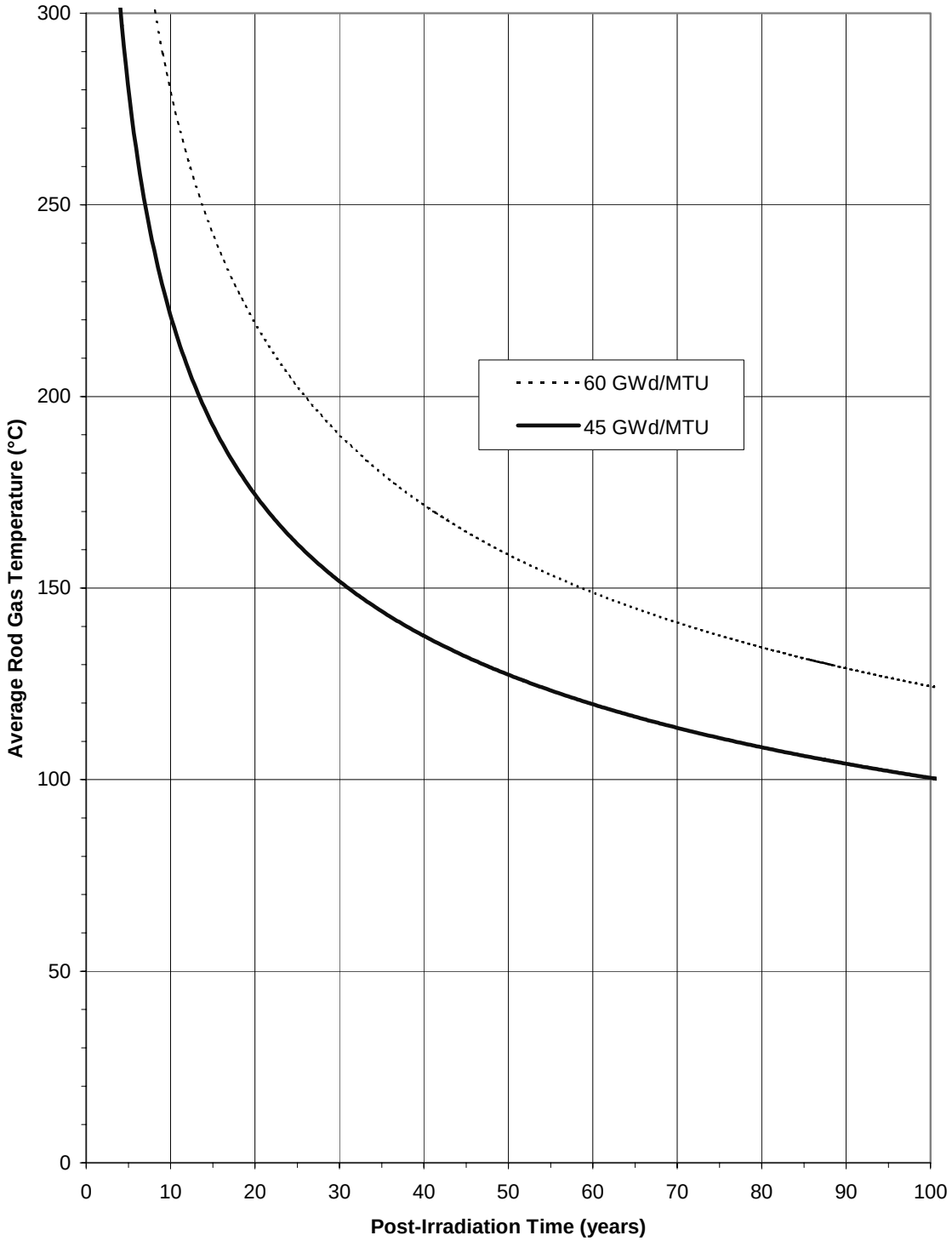

Figure 4.3-4 - PWR Fuel Peak Rod Average Gas Temperature Decay

4.4 Thermal Evaluation for Normal Conditions of Storage

This section provides a discussion of the thermal analysis methodology and results for the FuelSolutions™ W21 canister when used in conjunction with the FuelSolutions™ W150 Storage Cask and the FuelSolutions™ W100 Transfer Cask. The applicable canister thermal ratings, temperature distributions, and thermal performance are evaluated to verify that the canister and cask thermal design features adequately perform their intended functions under normal, off-normal, and accident conditions. Off-normal and accident conditions are further summarized in Chapter 11 of this FSAR. The thermal evaluations of the W21 canister in the storage and transfer casks are performed using conservative analytical techniques. Canister and cask thermal values are established to assure that all materials are maintained within their applicable minimum and maximum allowable temperatures during all modes of operation. Transient thermal analyses of some off-normal and accident conditions are performed to support establishment of the *technical specification* limits defined in Section 12.3 of this FSAR.

4.4.1 W21 Canister within Storage Cask

To validate the performance of the FuelSolutions™ W21 canister within the W150 Storage Cask under normal conditions of storage, the combined thermal model for the W21 canister and the storage cask is evaluated for the design basis normal climatic conditions presented in Table 4.1-2 using the enveloping generic canister heat flux profiles. The analysis presented herein is designed to establish a thermal rating and to demonstrate that the W21 canister and the storage cask allowable material temperatures are not exceeded under the thermal ratings at all sites within the contiguous United States.

This section presents the thermal analysis of the canister within the storage cask. The thermal model of the W21 canister is described in this section along with a discussion of how the canister thermal model interfaces with the storage cask. The specific thermal evaluation of the FuelSolutions™ W150 Storage Cask is presented in Section 4.4.1 of the FuelSolutions™ Storage System FSAR and is not repeated here.

4.4.1.1 Thermal Model

The analytical thermal model of the W21 canister is developed for use with the SINDA/FLUINT computer program. Section 4.7.4.1 presents an overview of the SINDA/FLUINT program and its past use for the analysis of nuclear systems. The thermal modeling of the W21 canister is presented in the following paragraphs. The details of the thermal model of the FuelSolutions™ W150 Storage Cask are discussed further in Section 4.4.1 of the FuelSolutions™ Storage System FSAR.

Canister Modeling Approach

The basic modeling approach used for the W21 canister is to divide the basket assembly into common geometry segments, such as a spacer plate and the sections of guide tubes and the canister shell extending from that spacer plate to the next spacer plate. By defining the basic thermal model in this manner, the thermal mass and conductance for all other sections of the basket are modeled by applying a set of scaling factors as a function of the spacer plate thickness

and the distance between the spacer plates. This approach not only simplifies the thermal modeling, but eases the verification process by minimizing the amount of original coding required to provide a complete thermal representation of the system. Precisely how this feature is used for this analysis is explained below.

The FuelSolutions™ W21 canister assembly includes the shell and basket assembly components. The canister shell assembly components include the cylindrical shell; top closure plate; top outer closure plate; bottom closure plate; bottom end plate; top and bottom end shield plugs; and vent and drain ports.

From a thermal point of view, the differences between the W21M and W21T versions of the FuelSolutions™ W21 canister are slight. The different materials used for the shield plugs (i.e., DU, carbon steel, and lead) have a negligible impact on the overall thermal performance of the canisters. This is due to a combination of reasons. First, the principle path for heat rejection is from the sides of the canisters and not the ends. Second, while the thermal conductivity and specific heat varies among the materials used for the shield plugs, the differences are not dramatic. And third, some of the differences, especially for steady-state conditions, are offset by the differences in the geometry of the shield plugs. For example, although carbon steel has a thermal conductivity about twice that of DU, the carbon steel shield plugs are thicker than DU shield plugs, meaning that the thermal resistance through the materials is about the same for many situations.

Although the greater use of carbon steels in the W21T version increases the thermal conductance for the basket assembly, the overall effect is small for several reasons. First, the number and spacing of the spacer plates in the two basket assembly designs are similar; thus, the heat transfer via convection from the guide tubes to the canister shell is also similar. Second, over 80% of the spacer plates used in the W21M version are the same in thickness and material (only six of the thirty-six W21M version spacer plates are stainless steel) as those used in the W21T version. Third, the increased conductance through the carbon steel spacer plates is partially offset by the thicker material used for the stainless steel spacer plates and the higher thermal emissivity of the “as rolled” stainless steel spacer plates versus that of the electroless nickel-plated carbon steel plates. In addition, since the short canister versions may have the same thermal loading as the long canister versions, the short version of the W21M canister is used for thermal analysis since its thermal performance encompasses that of the long canister versions.

Taken together, the W21T basket assemblies exhibit slightly higher thermal conductance in the radial direction, and similar conductance in the axial direction as compared to the W21M basket assemblies. The heat transfer differences between the W21M and W21T versions of the basket assemblies are small, with the W21M version yielding the smaller overall thermal conductance and, hence, the more conservative component temperature values. Therefore, the thermal model documented herein is for the W21M version of the FuelSolutions™ W21 canister design, but is applicable to the W21T version of the canisters as well.

Three general categories of analytical thermal submodels are used to analyze the performance of the W21 canister assembly within the storage and transfer casks. These submodels are:

- A typical spacer plate or group of spacer plates within the W21 basket assembly, including the associated sections of the spent fuel assemblies and guide tubes.
- The bottom end of the canister assembly, together with the bottom end shield plug and the associated basket assembly spacer plate sections.
- The top end of the canister assembly, together with the closure end shield plug and the associated basket assembly spacer plate sections.

Program features within SINDA/FLUINT are used to combine the thermal modeling of these common elements to complete the thermal modeling for every other section in the basket. The individual thermal sections, or submodels, are thermally connected to complete a full-length representation of the W21 canister configuration. A total of ten submodels are used in the thermal model of the W21 canister assembly.

Figure 4.4-1 illustrates the placement and extent of the model submodels used in the thermal model of the W21M-SS canister. Each thermal submodel represents a 90° section of the basket assembly and canister shell assembly. Symmetry conditions are assumed at the boundaries of the model for the geometry and thermal conditions within the storage cask.

The thermal model of each canister configuration consists of submodels “SA,” “SB,” “SC,” “SD,” “SE,” “SF,” “SG,” and “SH” through the mid-section of the canister and basket assembly; and model sections “END” at the bottom end and “LID” at top end of the canister. Figure 4.4-2 through Figure 4.4-7 present the layout of the thermal sections and nodes used within each of the model submodels. For the configurations where the basket is in the horizontal position, model sections “SCBOT,” “SDBOT,” “SEBOT,” and “SFBOT” are added to complete a 180° model of the basket over the canister portion that exhibits the highest temperature and thermal gradients. These model submodels are identical to their upper half counterparts, except that the heat transfer coefficients within the basket and outside of the canister shell reflect the lower half of the basket assembly. The specific steps taken to accomplish this are discussed later.

Taken together, the model submodels and their associated thermal sections provide a quasi-three-dimensional thermal model of the entire FuelSolutions™ W21M canister. The model is referred to as “quasi-three-dimensional” because it uses a combination of two-dimensional and three-dimensional modeling to represent different segments of the canister. Those portions of the assemblies (i.e., the interior of the basket assemblies and the canister side wall) that have significant variation in heat transfer in all three dimensions (“r,” “θ,” and “z”) are represented with a three-dimensional model. The bottom closure plate, end plate, and shield plugs are represented with axisymmetric modeling (i.e., “r” and “z” dimensions only) since the temperature variation in the “θ” direction (e.g., around the circumference) is small for the thermal boundary conditions imposed by the casks.

Modeling of the entire length of the canister permits simulation of the axial variation in decay heat within the fuel assemblies, the ability to model differences in axial placement of the fuel

assemblies within the canister, and an accurate determination of the thermal end effects introduced by the canister shield plugs and the variation in decay heat with axial position.

The approach used to model the canister assembly is further illustrated by examining the makeup of the thermal modeling for the "END" submodel. The "END" submodel encompasses the canister bottom, the shield plug, and the first six spacer plate sections of the basket assembly. Figure 4.4-2 illustrates the section of the canister assembly covered by the "END" submodel and the thermal node layout in the canister bottom and shield plug. Thermal nodes at six radial locations are used to provide temperature resolution within the bottom end plate, the shielding material, and the bottom plate. In addition to the nodes shown, an additional five thermal nodes are used on the inner surface of the bottom plate to represent surface temperatures. The thermal modeling in the shield plug represents an axisymmetric model of these components, which is appropriate for the expected temperature variation within the components.

Canister Modeling Basis

A 1.25-inch space is assumed to separate the bottom closure plate and the bottom of the first spacer plate. This dimension includes the 1-inch separation provided by the distance that the support rods extend below the spacer plate, plus 0.25 inches for a worst-case offset of the basket assembly within the canister. While thermal expansion within the basket acts to reduce the 0.25-inch distance, the effect is small and in the direction of reducing the basket temperatures. Heat transfer between the inside surface of the shield plug and the first spacer plate is via radiation and conduction/convection through the helium gas. No direct contact is assumed between the basket and the shield plug.

Temperature-dependent properties for specific heat and thermal conductivity are used for all components of the shield plug. No direct contact is assumed between the bottom end plate and the shield material, or between the shield material and the bottom closure plate. Instead, an air gap of 0.060 inches (1.5 mm) is assumed between each pair of components. This modeling approach provides a conservative estimate of the internal canister temperatures and the axial thermal gradient within the shield plug.

Figure 4.4-3 and Figure 4.4-4 illustrate the thermal modeling used for the fuel assemblies, the guide tubes, and the spacer plates in this section of the canister assembly. Figure 4.4-3 presents the thermal node layout used for the fuel assemblies and the basket assembly in the region between spacer plates. A 90º segment is represented with symmetry conditions used at the boundaries for the vertical orientation. An additional 90º segment can be added to simulate the lower half of the basket for the case when the canister is in the horizontal orientation. The temperature of each fuel assembly is simulated by one thermal node representing the peak fuel cladding temperature and a node at each face of the fuel assembly to provide the edge temperatures. This node layout complies with the lumped k_{eff}/h_{edge} model described in Manteufel and Todreas[5] (see Section 4.2). The same k_{eff}/h_{edge} model correlation is assumed for either horizontal or vertical orientation of the basket assembly. Helium gas is assumed as the medium within the canister.

A single node is used to represent each wall of the guide tube despite the fact that the guide tube wall is actually composed of three separate layers (e.g., the guide tube wall, the neutron absorber

sheet, and the outer wrapper). This level of modeling is appropriate since the combined 0.165-inch thickness of the materials used and the direct contact between the materials will limit the temperature difference between the guide tube wall layers to less than 2.0°C. Each guide tube is conservatively assumed to be centered in its respective spacer plate cutout (i.e., no credit is taken for direct contact between the guide tube and spacer plate surfaces), and each fuel assembly is conservatively assumed to be centered within the guide tubes. This assumption is used for the horizontal as well as the vertical orientation to account for possible imperfect contact, high centering between a series of spacer plates, etc.

The thermal modeling provides temperature resolution for the peak cladding temperature in the fuel assembly (i.e., nodes 10, 20, 30, … 80); the edge of the fuel assemblies (i.e., nodes 12, 13, 22, 23, … 84); the walls of the guide tubes (i.e., nodes 16, 17, 26, 27, … 88); the support rods and sleeves (i.e., nodes 402, 412, 422, 407, 436, and 461); and the canister shell (i.e., nodes 502 to 522) at each spacer plate section in the basket assembly. To differentiate between the various basket assembly sections being modeled in the SINDA/FLUINT program, the node numbers are incremented in steps of 1000 for each spacer plate section within the submodel (i.e., node 1502 is a section of canister side wall between the first two spacer plates, 2502 is between the second and third spacer plates, etc.).

Figure 4.4-4 illustrates the thermal node layout used at each spacer plate. Again, the modeling represents a 90º segment of the spacer plate over either the 0.75-inch thickness of the carbon steel spacer plate or the 2.0-inch thickness of the Type 316 stainless steel spacer plate. Symmetry conditions are used at the boundaries for the vertical orientation, or an additional 90º segment is used for the horizontal orientation. Thirty-seven nodes (i.e., nodes 202 to 272) are used to simulate portions of the spacer plate within each 90º segment. The modeling level chosen is aimed at providing thermal resolution within the spacer plate, while limiting the overall complexity of the model. As indicated in the figure, the same thermal nodes used to represent the fuel assemblies and guide tubes between the spacer plates are used to simulate these components at the spacer plates. While the presence of the spacer plate results in a local decrease in the temperature of these components, the amount of the decrease is small because of the thickness of the plates in comparison with their separation distances. As such, the added complexity required to capture this effect is deemed unnecessary.

Heat transfer from the guide tubes to the spacer plates is assumed to be via conduction and radiation across a 0.075-inch gap. For conservatism, direct contact between the guide tube and spacer plate is not assumed. The basket assembly is assumed to be centered in the canister. Heat transfer within the spacer plates is calculated using temperature-dependent properties. Heat transfer between the circumference of the spacer plates and the canister side wall is via conduction and radiation across a 3/16-inch gap. A view factor of 1.0 is assumed, together with a thermal emissivity of 0.40 for the edge of the stainless steel plates, 0.11 for the electroless nickel plated carbon steel plates, and 0.40 for the canister shell.

Canister Model Presentation

Figure 4.4-5 presents an isometric view of the node layout as it would appear between the first and second spacer plate in each thermal submodel. Axial conductors are used to complete the

three-dimensional modeling of the basket assembly by providing thermal communication between the thermal nodes at one spacer plate section and those at the next. A similar modeling approach to that depicted in Figure 4.4-3 and Figure 4.4-4 is used to represent the basket components in the other thermal submodels.

Figure 4.4-6 illustrates the thermal submodel used for the typical mid-body section (i.e., submodels "SA," "SB," "SC," "SD," "SE," "SF," "SG," and "SH") in the canister assembly. The length of each thermal submodel is selected to encompass two to three spacer plate sections within the FuelSolutions™ W21M-SS basket assembly. The modeling of the fuel and basket assembly region between the spacer plates is similar to that shown in Figure 4.4-3, except that the length is adjusted as required to match the separation distance between spacer plates. The thermal model at the individual spacer plates is the same as shown in Figure 4.4-4. Axial conductors within the canister shell, the guide tubes, and the fuel assemblies are used to tie the various submodels together.

As illustrated in Figure 4.4-7, the thermal submodel at the top end of the canister is similar to that used at the bottom end. The differences include the added layers of steel used in the closure and the differences in the basket layout. The thermal node layout for the spacer plates and the basket assembly between plates is similar to that shown in Figure 4.4-3 and Figure 4.4-4. Again, axial conductors within the canister shell, the guide tubes, and the fuel assemblies are used to provide thermal communication between the various submodels.

The modeling of the heat transfer within the basket assembly consists of a series of heat exchanges between the fuel assemblies, the guide tubes, the spacer plates, the support rods, and the canister side wall. The heat transfer modeling used to simulate the heat transfer modes for each set of spacer plates and the sections of guide tubes between them forms another layer of thermal submodeling within the SINDA/FLUINT program. This thermal submodel is repeated and scaled as appropriate to represent other spacer plate sections of the basket assembly. The following paragraphs describe the approach used to simulate the combined heat transfer mechanisms from the fuel assemblies to the canister side wall for a single spacer plate section.

Radiation Heat Transfer

The radiation view factor program VIEWH[20] is used to compute the radiation exchange factors from the guide tubes to adjacent guide tubes, the spacer plates, and the canister shell. Likewise, radiation heat transfer is modeled from the spacer plates to the adjacent spacer plates and to the canister shell. The emissivity values for the surfaces are taken from material properties listed in Section 4.2. The number of thermal nodes used to simulate the various surfaces of the guide tubes, spacer plates, and canister side wall results in approximately 240 radiation conductors interconnecting the various surfaces between the typical spacer plate section of the basket assembly, or somewhere between 8,500 and 9,000 radiation conductors for the entire basket assembly.

[20] Emery, A., *VIEW™--A Radiation Viewfactor Calculation Program*, Version 5.6.9, developed under NASA Grant NAG-1-41, University of Washington, Seattle, Washington, 1991.

Convection Heat Transfer

Beyond conduction and radiation heat transfer, the principal heat transfer mode within the basket assembly is convection. This is true for both the vertical and the horizontal orientations of the basket assembly. The fundamental approach and equations used to compute the convection heat transfer within the basket assembly is presented in Section 4.7.1. The convection that occurs between the fuel assemblies and the guide tubes is included as part of the of Manteufel and Todreas[5] non-linear form of the lumped k_{eff}/h_{edge} model for a typical PWR fuel assembly (see Section 4.2.2). Global convection heat transfer between the gas within the fuel guide tubes and the canister shell (i.e., the potential flow upward through the guide tube and downward along the canister shell) is conservatively ignored for this evaluation.

Figure 4.4-8 and Figure 4.4-9 present the modeled flow pattern within the horizontal and vertical orientations of the canister, respectively. Figure 4.4-10 provides further illustration of the flow pattern for the vertical orientation of the canister.

Canister to Storage Cask Model

The modeling of the W21 canister in the storage cask is accomplished by combining the thermal model of the W21M canister assembly, as defined above, with the thermal model of the storage cask, as defined in Section 4.4.1 of the FuelSolutions™ Storage System FSAR. The thermal modeling used in the storage cask portion of the model to connect a generic canister to the storage cask is deleted and a new set of thermal connections specific to the geometry of the W21M canister is substituted in its place. These W21M specific thermal connections consist of a series of convection and radiation conductors that reflect the thermal submodeling used for the W21M canister thermal model. The original coding in the storage cask model for convection between the canister and the inner air stream is retained, and the values computed are scaled to match the specific lengths of the canister shell represented by each thermal node on the W21 canister shell. This approach is used for the normal, off-normal, and accident conditions of storage. Radiation connections from the W21 canister to the storage cask thermal nodes are also redefined for the specific thermal modeling used in the combined W21 canister and storage cask thermal model. Figure 4.4-11 presents the alignment between the side wall sections of the storage cask and the thermal sub-models of the W21 canister.

The twenty-two variable length sections used to provide temperature resolution in the side wall section of the cask model are redefined to thermally match up with the thermal submodeling used for the W21 canister. Figure 4.4-11 presents a visual depiction of the alignment between the side wall sections of the storage cask and the thermal submodels of the W21 canister.

4.4.1.2 Canister Thermal Rating

The FuelSolutions™ W21 design basis thermal load cases are summarized in Table 4.1-2. For the determination of the W21 canister thermal rating, only steady-state operations at the normal hot condition are considered. The combined W21 canister-storage cask thermal model is exercised using the normal hot storage conditions (case 7, 100°F ambient) to determine the W21 canister thermal rating. The limiting long-term allowable material temperatures are applied at the normal hot storage condition in determining acceptable thermal performance of the canister at the thermal rating. The W21 canister thermal rating is established based on the most limiting

normal hot conditions in the storage and transfer casks. Since the fuel cladding is the most limiting material, and long-term cladding allowable temperature applies only in the storage cask, the W21 canister thermal rating is based on normal hot storage conditions.

The thermal rating of the W21 canister within the storage cask is based on the normal air flow path in the vertical orientation. Off-normal flow conditions such as all vents blocked, horizontal orientation, and off-normal thermal conditions are not considered as the basis for establishing the canister thermal rating. Where the operating modes at the established thermal rating may result in steady-state temperatures that exceed material limits, transient analyses of these operating modes are performed to establish the *technical specification* limits defined in Section 12.3 of this FSAR. These transient cases are addressed in Sections 4.5 and 4.6 for off-normal and accident conditions, respectively.

The short W21 canister and storage cask configuration is conservatively used as a basis for the W21 canister thermal ratings due to the shorter stack height achieved within the storage cask and the smaller canister and cask side wall height available for heat transfer. Therefore, the thermal qualification results for the W21M-SS canister bound those for the other members of the W21 canister family.

The methodology discussed in Section 4.1.3.2 is implemented for the two thermal rating cases (Q_{max}, $LHGR_{max}$) under consideration. The two design basis axial heat profiles in Figure 4.1-1 are applied as a boundary condition for the normal hot storage condition. The allowable long-term material temperatures in Table 4.3-1 are applied to the normal hot storage case. The total canister heat load is gradually increased until an allowable material temperature is reached for both the “max. thermal” and “max. thermal gradient” profiles. The resulting maximum W21 canister heat load rating (Q_{max}) and linear heat generation rating ($LHGR_{max}$) are presented in Table 4.4-1 for each of the axial heat profiles considered. The maximum value of each becomes the W21 canister thermal rating. As expected, the Q_{max} rating is achieved using the “max. thermal” profile and the $LHGR_{max}$ rating is achieved with the “max. thermal gradient” profile.

Because the long-term allowable SNF cladding temperature presented in Table 4.3-1 is based on PWR fuel burnups up to 60 GWd/MTU, the W21 canister thermal rating also applies for PWR fuel burnups up to 60 GWd/MTU.

Table 4.4-2 and Table 4.4-3 present a summary of the canister system temperatures at the load qualification points for the “max. thermal” profile and “max. thermal gradient” profile. As seen from the temperatures listed in the tables, the fuel cladding is the limiting material for the W21 canister qualification. All other canister materials are within their respective long-term allowable temperatures.

Given that the resulting W21 thermal rating yields substantial thermal margins for the canister structural materials, the above process was repeated to establish the maximum canister thermal rating based on structural material thermal limits only. This higher canister structure heat load rating (and associated linear heat generation rate) are also shown in Table 4.4-1. A comparison of the resulting canister and cask component temperatures with the allowable component temperatures for operations at the qualified W21 canister thermal rating are presented in Table 4.4-2 and Table 4.4-3.

As seen from Table 4.4-2, the peak fuel clad temperature is just under its allowable value at the canister heat load rating of 22.0 kW. At this heat load, all of the canister structural materials are

well below their maximum allowable values. At the higher heat load of 25.1 kW (the maximum W21 canister structure heat load), the carbon steel spacer plate temperature is just under its allowable value, whereas all other canister components have greater thermal margins. These results demonstrate that the maximum allowable fuel clad temperature limit is met at the rated canister heat load of 22.0 kW, whereas the thermal margins for the canister's structural components are sufficient to support a higher heat load of 25.1 kW. Similar results are seen in Table 4.4-3 for the $LHGR_{max}$ rating.

The majority of the thermal calculations presented in this FSAR are conservatively based on the higher canister structure maximum heat load of 25.1 kW. The results of these calculations will be bounding (conservative) for the peak temperatures and thermal gradients associated with canister payloads rated for a maximum heat load of 22.0 kW. The thermal results with the lower canister heat load of 22.0 kW are presented for the normal and normal hot conditions of storage to verify that the maximum long-term fuel clad temperature is met at the 22.0 kW heat load.

For all other thermal calculations, including those for basket component temperature, gas pressure analyses, accident analyses, and transient analyses are conservatively based on the higher canister heat load limit of 25.1 kW. As such, operations at the canister heat load rating of 22.0 kW will yield higher thermal margins, available operation time, etc., than indicated by the results presented.

4.4.1.3 Maximum Temperatures

The maximum temperatures for the W21 canister components are determined for the design basis normal condition thermal load cases, specifically cases 5, 6, and 7, as defined in Table 4.1-2. These normal conditions assume only normal air flow path, vertical orientation of the cask and canister, and ambient conditions of 0°F, 77°F, and 100°F. The analysis is conducted for the two bounding W21 canister heat load profiles illustrated in Figure 4.1-1 (i.e., the "max. thermal" and the "max. thermal gradient" profiles) and at the maximum canister thermal ratings.

The system temperatures resulting from normal condition operation in the storage cask are presented in Table 4.4-4 for the "max. thermal" heat profile. The temperatures in the table are computed using steady-state analysis and are based on operations at the 22.0 kW maximum thermal rating (Q_{max}) of the W21 canister for the normal and normal hot conditions of storage. The temperatures at the normal cold conditions of storage are based on a conservative (i.e., higher thermal gradients) heat load of 25.1 kW. The thermal results for the "max. thermal gradient" heat profile are similar for local maximums and lower on a canister average basis.

As noted from Table 4.4-4, all W21 canister component temperatures are within their material allowable temperatures for each load case. In addition to the canister temperatures, storage cask temperatures at selected locations are also presented. For comparison purposes, the same selected storage cask temperatures from the FuelSolutions™ Storage System FSAR are shown at the bottom of the table. The full presentation of the storage cask temperatures is contained in Section 4.4.1 of the FuelSolutions™ Storage System FSAR. As expected, since the storage cask thermal rating is higher than the W21 canister thermal rating, the analysis in the FuelSolutions™ Storage System FSAR bounds the cask material temperatures resulting from operations with the W21 canister. This result assures that the safety basis established for the storage cask in the FuelSolutions™ Storage System FSAR remains valid for the operation of the W21 canister in the storage cask.

Figure 4.4-13 and Figure 4.4-14 present axial temperature distributions within the components of the W21 canister and the storage cask for the normal hot and normal cold conditions of storage, respectively, and with the "max. thermal" heat load profile. These temperature distributions are conservatively based on the maximum canister structure heat load of 25.1 kW. The variation in the heat load with axial position is clearly visible in the plots. The temperatures in the upper portion of the basket are higher due to a combination of temperature stratification in the canister and heating of the air stream within the storage cask as it rises in the annulus between the thermal shield and the canister. This latter effect and the direction of movement in the cooling air through the cask are also visible in the plots via the steady rise in the storage cask component temperatures from the bottom to the top of the cask.

Figure 4.4-15 to Figure 4.4-18 present the temperature distribution within the hottest carbon steel and stainless steel spacer plates for the same normal hot and normal cold conditions of storage, respectively, and at the maximum canister structure heat load of 25.1 kW. The temperature results in the plots illustrate the expected symmetry conditions when the canister is in the vertical orientation.

4.4.1.4 Minimum Temperatures

The temperatures in the canister and storage cask components under normal cold conditions are listed in Table 4.4-4. Again, the temperatures shown are for the design canister at the canister structure thermal rating and, therefore, do not represent the lowest expected component temperatures.

The low temperature compatibility of the storage cask components is also evaluated for the bounding load case of 0°F (-18°C) ambient temperature, zero decay heat load, and no insolation. The steady-state temperatures of the W21 canister and storage cask components for this analytically trivial case are 0°F (-18°C). This temperature level is within the allowable minimum temperatures for all components.

4.4.1.5 Internal Pressures

The W21 canister internal pressure depends upon the quantity of fuel rod fill gas, fuel rod fission gas, and canister backfill gas in the canister cavity under normal conditions. Additionally, control component internal gas may also contribute to canister internal pressure for applicable W21 canister and payload configurations.

Fission gas generation depends primarily upon the fuel assembly MTU loading and burnup level. For the purpose of rod pressure determination, the only significant fission gas contributors are Krypton (Kr) and Xenon (Xe). All isotopes of Kr and Xe are considered for fission gas generation. Other fission products are neglected because they either exist in insignificant quantities or do not exist in the gaseous form at dry storage temperatures.

Consistent with NUREG-1536,[12] only 30% of the fuel pellet fission gas yield is assumed to be available for release within the fuel rod. As a result, 30% of the fission gas yield is assumed to be released into the canister cavity for each postulated rod failure. For each postulated rod failure, 100% of the rod fill gas is assumed to be released into the canister cavity. Post-irradiation testing of PWR fuel assemblies indicates that the assumed 30% fission gas release fraction is conservative.[15] Nevertheless, a net 30% fission gas release is conservatively used for canister confinement boundary pressure determination.

The effects of burnable poison rod assembly (BPRA) gas are considered for the applicable W21 canister configurations and PWR fuel assembly types with control components. Similar to the fuel assemblies, 1% of the control component rods are conservatively postulated to fail for normal conditions of storage with 10% for off-normal conditions of storage and 100% for accident conditions of storage.

For normal conditions of storage, 1% of the fuel rods are postulated to fail. For off-normal conditions of storage, 10% of the fuel rods are postulated to fail. For accident conditions of storage, 100% of the fuel rods are postulated to fail. Off-normal and postulated accident internal pressure analyses are discussed in Sections 4.5 and 4.6, respectively.

The smallest loaded W21 canister free volumes, based on worst-case tolerance conditions, are conservatively used. All W21 canister configurations and fuel loading options are evaluated to determine the limiting free volumes for each fuel assembly class and type. When multiple W21 canister options are available for a specific fuel assembly type and configuration (with or without control components), the W21 canister type with the smallest loaded free volume is conservatively used. The volume displaced by control components and fuel spacers is considered in the free volume calculations.

The W21 canister cavity average gas temperature for normal hot storage conditions (100°F ambient, Section 4.1.4) is conservatively assumed for the normal pressure analysis.

4.4.1.6 Fuel Rod Fill Gas

The total moles of helium fill gas within each fuel assembly depends on the assembly specific fuel rod total free volume and the fill gas pressure. Since the rods are backfilled during fabrication, prior to irradiation or exposure to elevated temperatures, the nominal rod dimensions are used. The ideal gas law applies for determination of fuel rod fill gas moles:

$$N_{Fill} = \frac{P_{Fill} V_{rod}}{RT}$$

where:

P_{Fill} = Rod fill gas pressure (atm)

V_{rod} = Fuel assembly rod internal free volume (liters)

R = Ideal gas constant (0.0821 atm-liter/gmole-°K)

T = Temperature at rod backfill (293°K)

Moles of rod fill gas are summarized by fuel assembly class in Table 4.4-5.

4.4.1.7 Fuel Rod Fission Gas Generation

Fission gas generation is primarily dependent upon the fuel MTU loading and burnup level. Two separate burnup levels are evaluated for PWR fuel: moderate burnup (45 GWd/MTU) and high burnup (60 GWd/MTU). Although the canister thermal rating is based on PWR fuel burnup levels up to 60 GWd/MTU, the fission gas generation from 45 GWd/MTU burned fuel is also provided to allow evaluation of fuel burnup effects on cladding allowable temperatures (see Section 4.3.2) and canister internal pressures.

Two independent methods are used to determine the fission gas generation. The first method uses the RADDB[21] to obtain the quantity of Kr and Xe gases generated for the given burnup levels, assuming standard enrichment and a representative five-year decay. The second method is a direct calculation of the moles of Kr and Xe fission gas using standard industry constants, and fuel specific burnup and MTU loading. The method that results in the largest quantity of fission gas generation is conservatively used in the pressure calculations. Basic methodologies are described below:

Fission Gas Yield from RADDB

$$N_{Kr} = (m_{Kr}\frac{grams}{MTIHM})(\frac{mole}{83.8\,grams\,Kr})(\frac{MTU}{assy})(\frac{21 assy}{canister})$$

$$N_{Xe} = (m_{Xe}\frac{grams}{MTIHM})(\frac{mole}{131.3\,grams\,Xe})(\frac{MTU}{assy})(\frac{21 assy}{canister})$$

$$N_{Fission} = N_{Kr} + N_{Xe}$$

where:

N_{Kr}	=	gmoles of Kr/canister
N_{Xe}	=	gmoles of Xe/canister
m_{Kr}	=	Grams Kr/MTIHM (from RADDB)
m_{Xe}	=	Grams Xe/MTIHM (from RADDB)
MTU/assy	=	Fuel assembly class specific

Calculation of Fission Gas Yield

$$N_{Fission} = (\frac{GWd}{MTU})(1.0\cdot 10^{9}\frac{W}{GW})(86{,}400\frac{\sec}{day})(\frac{MeV}{1.602\cdot 10^{-13}\,Joules})(\frac{1\,fission}{207\,MeV})(0.303\frac{atoms\,Kr+Xe}{fission})$$
$$\cdot(\frac{mole}{6.02\cdot 10^{23}\,atoms})(\frac{MTU}{assy})(\frac{21 assy}{canister})$$

where:

$N_{Fission}$	=	gmoles of Kr and Xe fission gas/canister
MTU/assy	=	Fuel assembly class specific

Industry constants:

207 MeV/fission[22]

0.303 atoms Kr and Xe/fission[23]

---

[21] *LWR Radiological Data Base (RADDB)* v 1.1, U.S. Department of Energy, Office of Civilian Radioactive Waste Management, Prepared by Oak Ridge National Laboratory, July 1992.

[22] Lamarsh, J.R., *Introduction to Nuclear Engineering*, Addison-Wesley Publishing Company, 1977.

Moles of rod fission gas are summarized in Table 4.4-5 by fuel assembly class and burnup range.

4.4.1.8 PWR Control Components

Since BPRAs have a similar design to the corresponding fuel assemblies, the quantity of fill gas in each control rod is assumed to be the same as the corresponding SNF rod fill gas. The total quantity of BPRA fill gas is determined as a ratio of the maximum number of individual control rods to the number of fuel rods per assembly.

In addition to the fill gas, the borosilicate glass or B_4C material within certain BPRAs generates helium gas following neutron absorption. The following equation applies:[23]

$$ {}^{10}_{5}B + {}^{1}_{0}n \rightarrow {}^{4}_{2}He + {}^{7}_{3}Li $$

where the superscripts indicate the number of nucleons (neutrons and protons) and the subscripts indicate the atomic numbers (number of protons) of the isotopes. As can be seen, following neutron absorption, one mole of helium gas is generated for each mole of B^{10}. B^{10} comprises 19.9% of the natural boron in the B_4C material. The quantity of helium gas (in moles) generated from B^{10} neutron absorption is determined as follows:

$$ N_{BPRA\,B10} = (0.043\frac{g\,B}{cm})\left(\frac{mole\,B}{10.81\,g}\right)\left(\frac{0.199\,moles\,B^{10}}{mole\,B}\right)\left(\frac{mole\,He}{mole\,B^{10}}\right)\left(\frac{2.54\,cm}{in}\right)\left(\frac{length(in)}{rod}\right)\left(\frac{rods}{BPRA}\right)\left(\frac{21\,BPRAs}{canister}\right) $$

For the canister internal pressure evaluation, 100% of the burnable poison rods are conservatively postulated to fail. For each failed control rod, 100% of the fill gas and 30% of the helium generated from neutron absorption are assumed to be released into the canister/cask free volume. No credit is taken for the additional free volume available in the failed control rods. Table 4.4-5 shows the total moles of control component gas (fill gas and generated helium) which are available for release in the canister-cask free volume for the applicable fuel assembly types with control components that may be loaded in the W21 canister.

4.4.1.9 Normal Canister Pressure

The quantity of inert gas, in terms of moles needed for canister cavity backfill, are determined in order to achieve 10 psig (1.68 atm) in the canister cavity under normal hot storage conditions (100°F ambient, Section 4.1.4) with 1% rod failures. The ideal gas law is again used to calculate the moles of canister backfill gas as follows:

$$ N_{Total\ Normal} = \frac{P_{Normal}\ V_{canister}}{R\,T_{Normal}} $$

$$ N_{Normal} = 0.01 \cdot N_{Rods} $$

$$ N_{Canister} = N_{Total\ Normal} - N_{Normal} $$

[23] Olander, D.R., *Fundamental Aspects of Nuclear Reactor Fuel Elements*, Energy Research and Development Administration, 1976.

where:

$N_{Total\ Normal}$ = Total moles of gas in canister cavity under normal conditions.

N_{Normal} = Total moles of rod gas released into the canister cavity, assuming 1% rod failures

N_{Rods} = Total moles of fuel rod fill gas, fission gas, and control component gas (as applicable) available for release.

$N_{Canister}$ = Total moles of canister backfill gas (Table 4.4-6)

P_{Normal} = Canister pressure for normal hot storage (10 psig, 1.68 atm)

$V_{Canister}$ = Worst-case canister cavity free volume (Table 4.4-6)

T_{Normal} = Canister gas temperature for normal hot storage (°K)

Since the assumption of 1% rod failures may not be conservative for some canister thermal analyses, the canister pressure under normal hot storage conditions is also calculated considering only the canister backfill gas:

$$P_{Canister} = \frac{N_{Canister} R T_{Normal}}{V_{Canister}}$$

where:

$P_{Canister}$ = Canister pressure for normal hot storage, no rod failures

The W21 canister normal pressure at the thermal rating under normal hot storage conditions with 1% rod failures is 10 psig. The canister normal pressure under the same conditions with no rod failures is summarized in Table 4.4-6 by fuel assembly class and burnup range.

The canister shell design, fabrication, inspection, and closure processes assure that the canister does not leak, as discussed in Section 7.1 of this FSAR. A helium loss at the allowable canister leak rate over the 100-year storage life does not significantly reduce the canister cavity pressure or adversely impact heat transfer.

4.4.1.10 Maximum Thermal Stresses

FuelSolutions™ W21 canister maximum thermal stresses developed within the storage cask under normal conditions are addressed in Section 3.5.1 of this FSAR. Calculation of these thermal stresses is based on the maximum canister structure heat load of 25.1 kW, and is conservative (bounding) for the actual canister heat rating of 22.0 kW.

4.4.1.11 Evaluation of Canister Performance for Normal Conditions

The results of the steady-state analyses demonstrate that the storage cask allowable material temperatures under normal conditions are met for the maximum canister thermal rating, as presented in Table 4.4-1. Over the long-term storage period, the spent fuel decay heat decreases, thus increasing the margins relative to the allowable temperatures. Therefore, the W21 canister is suitable for the dry storage of PWR fuel within the FuelSolutions™ W150 Storage Cask.

Table 4.4-6 summarizes the canister pressures for normal conditions of storage. As seen from the table, the canister pressurization for normal conditions of storage is within the design basis canister pressure.

The W21 canister heat balance under normal hot storage conditions and the maximum heat load rating (Q_{max}) are presented schematically in Figure 4.4-19. As can be seen, heat input to the storage cask is from SNF decay heat (25.1 kW, based on the canister structural heat load rating) and solar (3.03 kW on top, 2.95 kW on sides). Most of the heat is removed by natural convection air flow (23.16 kW) with the remaining heat lost through the storage cask to ambient through natural convection (1.50 kW from top, 2.16 kW from sides) and radiation (1.91 kW from top, 2.35 kW from sides).

The storage cask liner thermocouple reading (160°F) under normal hot storage conditions with the design basis W21 canister loaded is used as the basis for establishing the *technical specification* for normal periodic temperature monitoring contained in Section 12.3 of this FSAR.

Table 4.4-1 - W21 Canister Thermal Rating in Storage Cask (Normal Hot Storage Conditions)

Applicable Fuel Group Cooling Table	Axial Heat Profile	Q_{max} (kW)	$LHGR_{max}$ (kW/in)
PWR Fuel 0-60 GWd/MTU	"Max. Thermal"	22.0	0.161
	"Max Thermal Gradient"	13.4	0.161
	Thermal Rating	**22.0**	**0.161**
W21 Canister Structure Thermal Rating		**25.1**	**0.184**
Storage Cask Thermal Rating		28.0	0.253

Table 4.4-2 - W21 Canister System Temperature for Heat Load Qualification in Storage Cask at Q_{max}(1)

Component	Component Maximum Temperature (22.0 kW)	Component Maximum Temperature (25.1 kW)	Maximum Allowable Component Temperature(2)
Peak Fuel Rod Cladding	349.9°C	378.9°C	350.0°C
Guide Tube	624°F	675°F	800°F
Spacer Plates:			
Stainless Steel	616°F	665°F	800°F
Carbon Steel	612°F	662°F	700°F
Support Rod	440°F	472°F	650°F
Helium Bulk	458°F	493°F	N/A
Canister Shell	388°F	415°F	800°F
Max. Concrete	177°F	183°F	200°F
Cask Liner Thermocouple(3)	139°F	160°F	N/A

Notes:

(1) Temperatures based on the "max. thermal" profile.

(2) Canister allowable temperatures are from Table 4.3-1. Storage cask material allowable temperatures are from Table 4.3-1 of the FuelSolutions™ Storage System FSAR.

(3) Estimated thermocouple reading for analyzed condition.

Table 4.4-3 - W21 Canister System Temperature for Heat Load Qualification in Storage Cask at $LHGR_{max}$[1]

Component	Component Maximum Temperature (13.4 kW)	Component Maximum Temperature (15.3 kW)	Max. Allowable Temperature[2]
Peak Fuel Rod Cladding	348.6°C	378.1°C	350.0°C
Guide Tube	621°F	673°F	800°F
Spacer Plates: Stainless Steel Carbon Steel	 606°F 610°F	 656°F 661°F	 800°F 700°F
Support Rod	443°F	476°F	650°F
Helium Bulk	338°F	361°F	N/A
Canister Shell	394°F	422°F	800°F
Max. Concrete	167°F	173°F	200°F
Cask Liner Thermocouple[3]	129°F	140°F	N/A

Notes:

(1) Temperatures based on operations with the "max. thermal gradient" profile and normal hot storage conditions.

(2) Canister allowable temperatures are from Table 4.3-1. Storage cask material allowable temperatures are from Table 4.3-1 of the FuelSolutions™ Storage System FSAR.

(3) Estimated thermocouple reading for analyzed condition.

Table 4.4-4 - Maximum W21 Canister System Temperature at Q_{max} for Storage[1]

Component	W21 In Storage Cask			Allowable Temp.[3]
	Case 5 Normal Storage	Case 6 Normal Cold Storage[2]	Case 7 Normal Hot Storage	
Peak Fuel Rod Cladding	339.3°C	333.3°C	349.9°C	350.0°C
Guide Tube	604°F	587°F	624°F	800°F
Spacer Plates:				
Stainless Steel	595°F	576°F	616°F	800°F
Carbon Steel	591°F	571°F	612°F	700°F
Support Rod	417°F	368°F	440°F	650°F
Helium Bulk	437°F	397°F	458°F	N/A
Canister Shell	365°F	306°F	388°F	800°F
Max. Concrete	152°F	52°F	177°F	200°F
Cask Liner Thermocouple[4]	115°F	37°F	139°F	N/A
Reference Results From Table 4.4-7 of the FuelSolutions™ Storage System FSAR				
Canister Shell[5]	*423 °F*	*337 °F*	*447 °F*	--
Max. Concrete[5]	*169 °F*	*61 °F*	*197 °F*	--
Cask Liner Thermocouple[4,5]	*150 °F*	*48 °F*	*179 °F*	--

Notes:

(1) Except as noted, temperatures are based on a heat load of 22.0 kW.

(2) Temperatures based on a heat load of 25.1 kW.

(3) Canister allowable temperatures are from Table 4.3-1. Storage cask material allowable temperatures are from Table 4.3-1 of the FuelSolutions™ Storage System FSAR.

(4) Estimated thermocouple reading for analyzed condition.

(5) Temperatures based on a heat load of 28 kW.

Table 4.4-5 - Fuel Rod Gas[1]

Fuel Type	Fuel Rod Fill Pressure (psig)	Fuel Rod Free Volume/ Assembly (in^3)	Rod Fill Gas (moles/ canister)	Control Component Gas (moles/ canister)	Rod Fission Gas (moles/canister)	
					45 GWd/MTU	60 GWd/MTU
Yankee Rowe	450	146	66.1	--	103.0	136.9
Fort Calhoun	450	284	128.6	32.6	141.7	188.3
Palisades	450	294	133.0	--	155.6	206.8
CE 14x14	400	391	157.6	47.6	153.3	203.7
St. Lucie 2	450	269	121.6	45.9	142.1	188.8
WE 14x14	460	505	233.1	49.8	150.4	199.9
WE 15x15	475	402	191.7	54.9	171.0	227.3
WE 17x17	500	456	228.6	64.0	173.4	230.5
B&W 15x15	415	438	183.1	57.3	175.0	232.6
B&W 17x17	435	368	160.8	57.8	172.1	228.7
CE 16x16	450	306	138.4	--	160.5	213.3
CE 16x 16 Sys80	450	301	136.0	--	160.5	213.3

Note:
[1] Gas parameters are presented for the limiting fuel assembly type within each class, which results in the highest calculated canister accident pressure.

Table 4.4-6 - W21 Canister Free Volume and Normal Pressures[1]

Fuel Type	Min. Canister Free Volume (liters)		45 GWd/MTU				60 GWd/MTU			
			Canister Back-fill Gas[2] (moles)		Normal Pressure (no failures) (psig)		Canister Back-fill Gas[2] (moles)		Normal Pressure (no failures) (psig)	
	w/o CC	w/ CC	w/o CC	w/ CC	w/o CC	w/ CC	w/o CC	w/ CC	w/o CC	w/ CC
Yankee Rowe	5831	-	224	-	9.8	-	224	-	9.8	-
Fort Calhoun	5793	5650	221	216	9.7	9.6	221	215	9.6	9.6
Palisades	5773	-	221	-	9.7	-	220	-	9.6	-
CE 14x14	5933	6192	226	236	9.7	9.6	226	236	9.6	9.6
St. Lucie 2	5897	6157	226	235	9.7	9.7	225	235	9.7	9.6
WE 14x14	5830	5892	222	224	9.6	9.5	221	223	9.5	9.5
WE 15x15	5650	5640	215	214	9.6	9.5	214	214	9.5	9.5
WE 17x17	5554	5826	211	221	9.5	9.5	210	220	9.5	9.4
B&W 15x15	5729	5828	218	221	9.6	9.5	218	221	9.5	9.5
B&W 17x17	5798	5878	221	224	9.6	9.6	220	223	9.6	9.5
CE 16x16	6606	-	253	-	9.7	-	252	-	9.6	-
CE 16x 16 Sys80	6625	-	253	-	9.7	-	253	-	9.7	-

Notes:

(1) Gas parameters are presented for the limiting fuel assembly type within each class, which results in the highest calculated canister accident pressure.

(2) Canister backfill moles calculated to achieve canister cavity pressure of 10 psig at normal hot storage conditions with 1% rod failures.

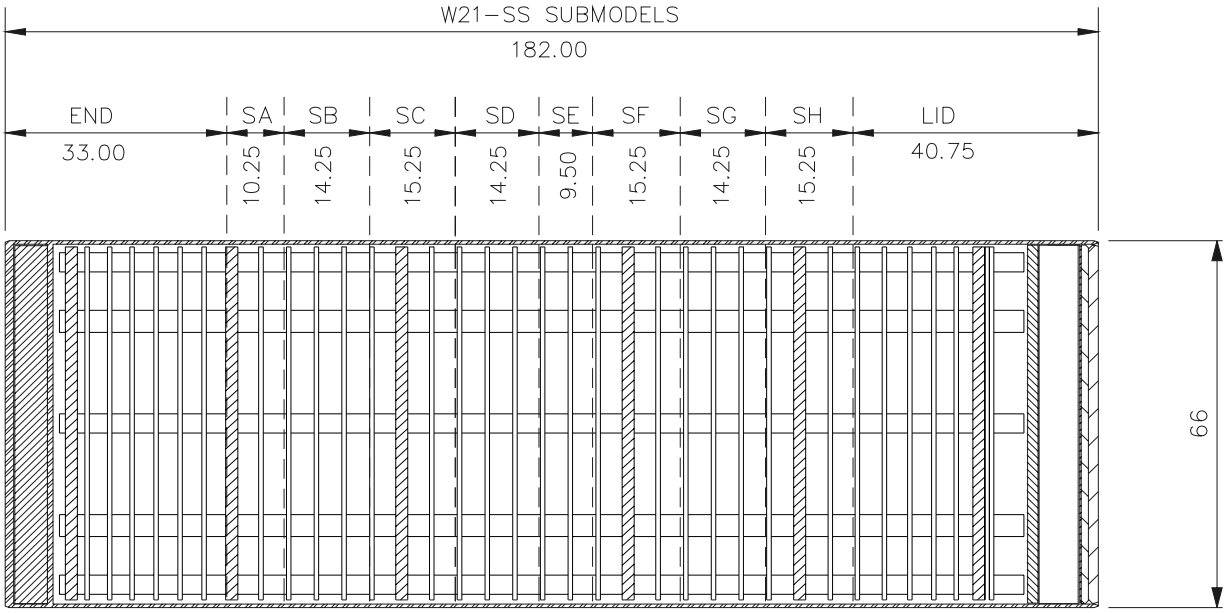

Figure 4.4-1 - FuelSolutions™ W21M-SS Canister Thermal Submodel Layout

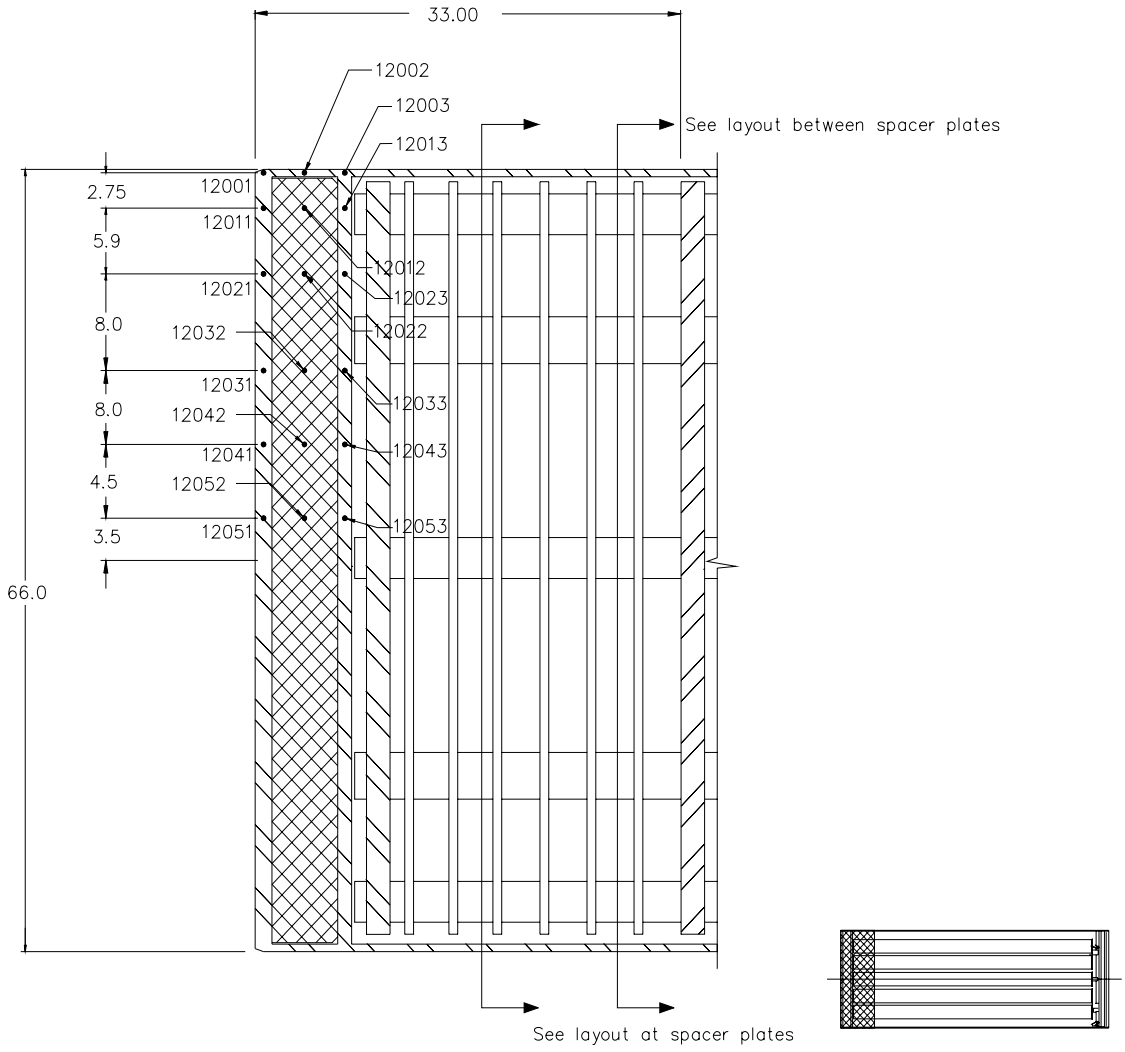

Figure 4.4-2 - Node Layout for W21 Canister Bottom End

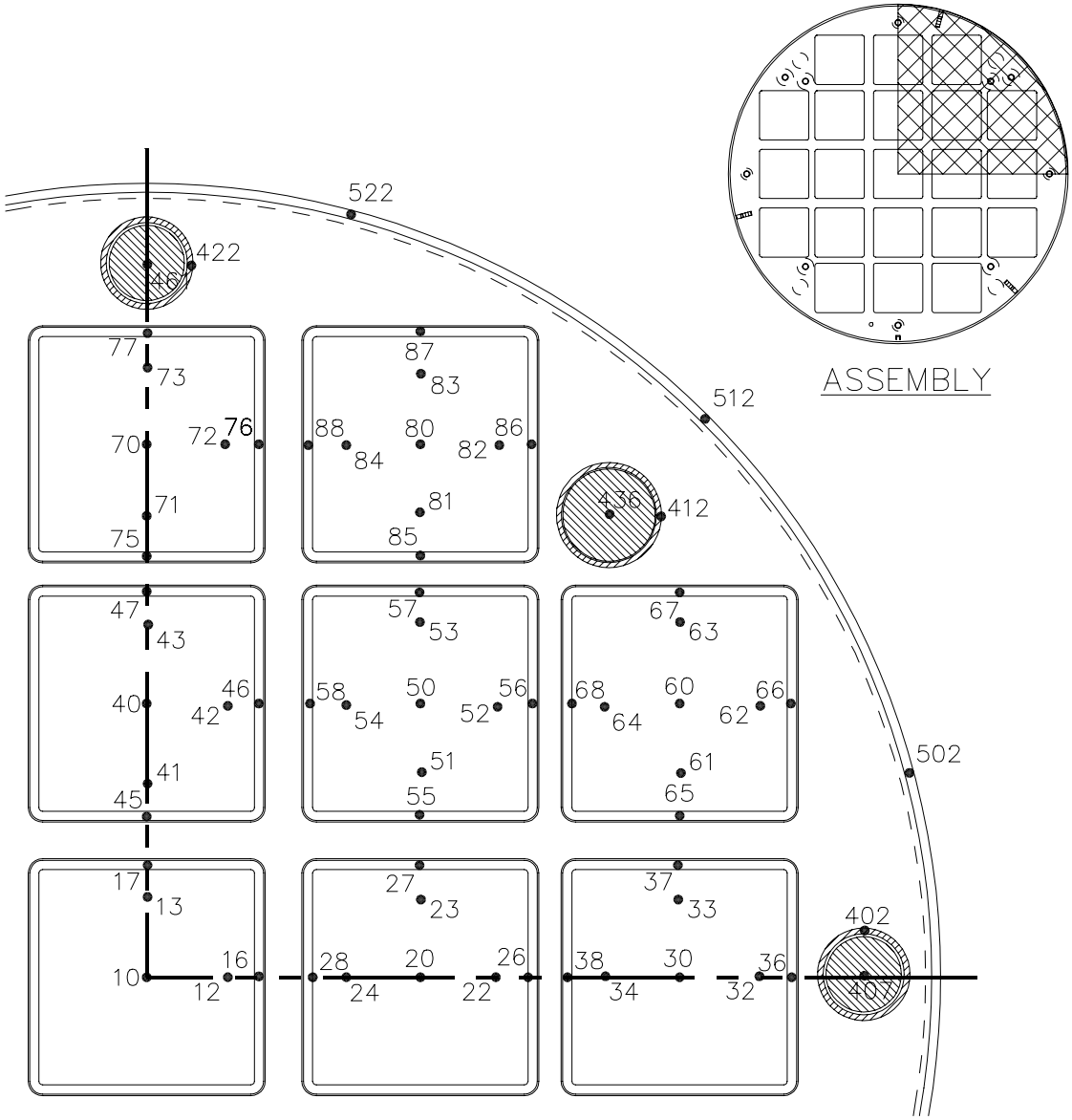

Figure 4.4-3 - Typical Node Layout Between W21 Spacer Plates

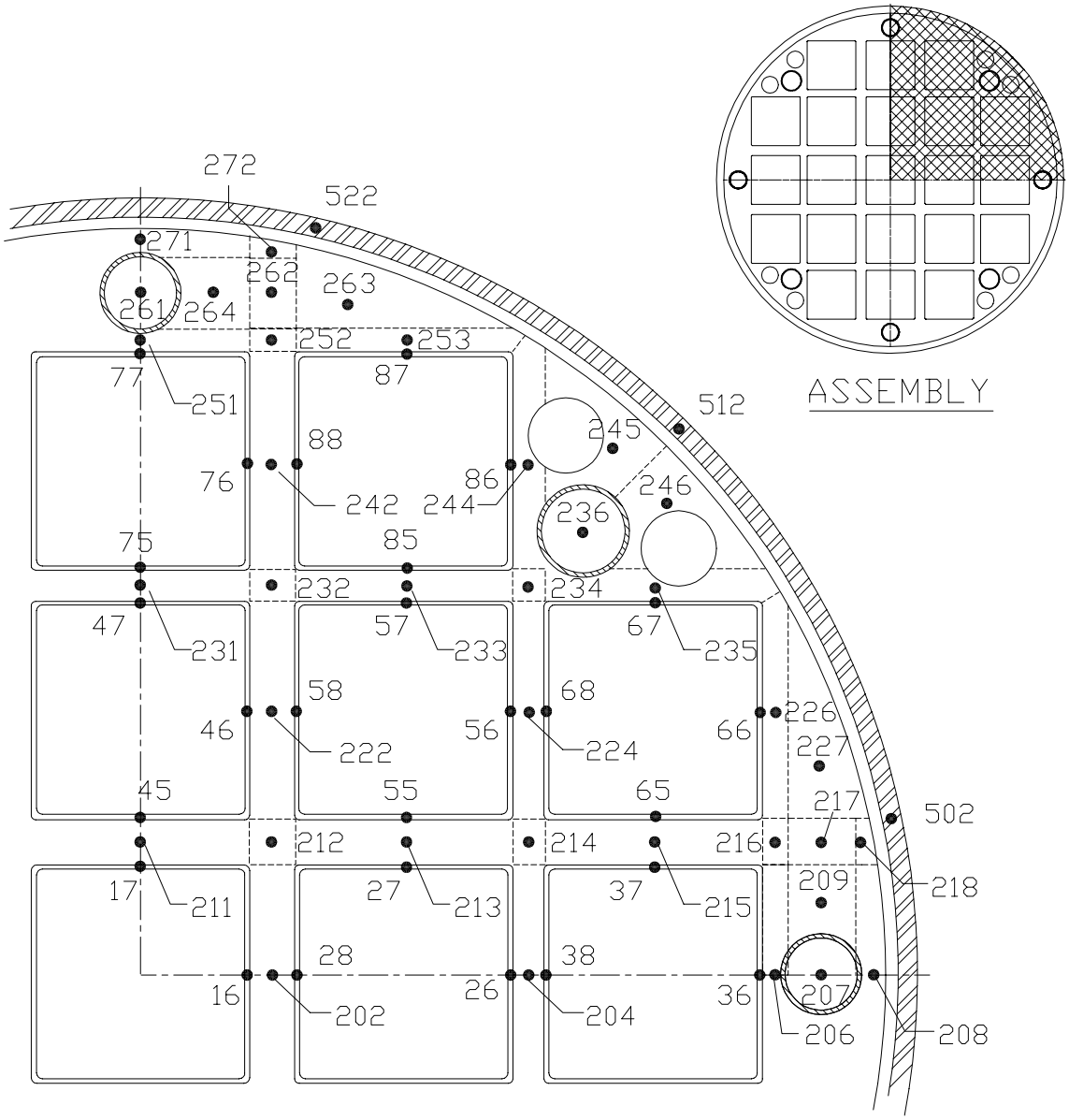

Figure 4.4-4 - Typical Node Layout at W21 Spacer Plate

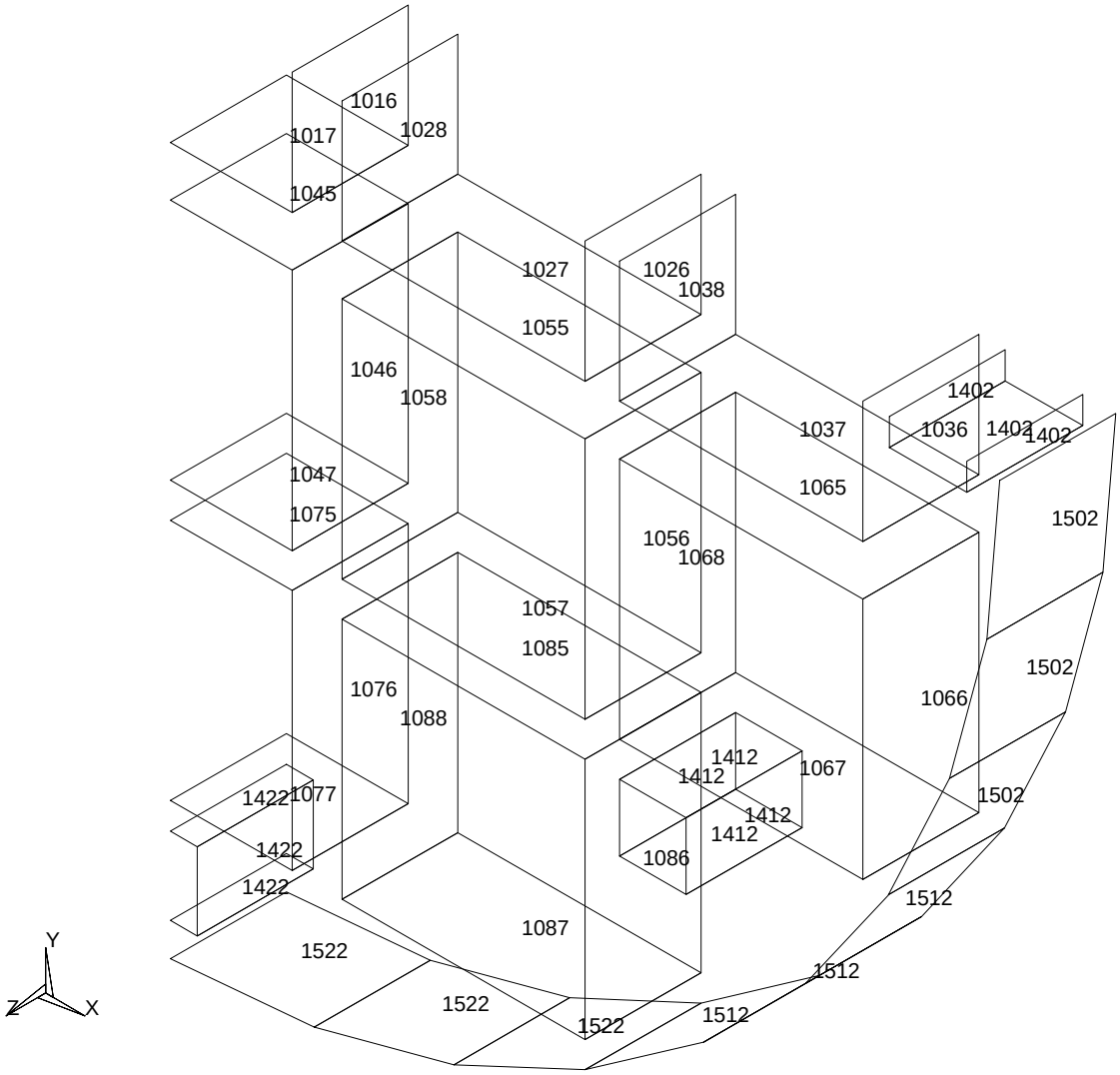

Figure 4.4-5 - Isometric View of Node Layout Between Typical Set of W21 Spacer Plates

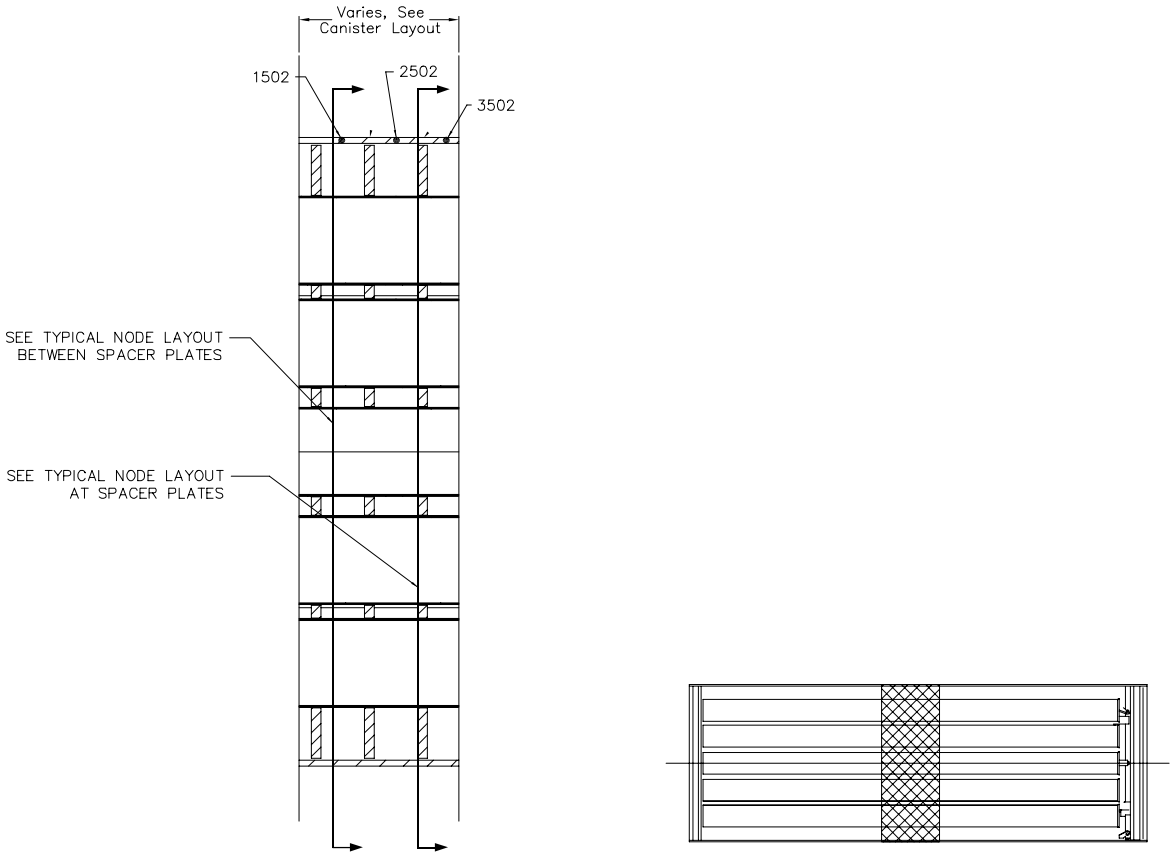

Figure 4.4-6 - Node Layout for W21 Canister Mid-Length Section

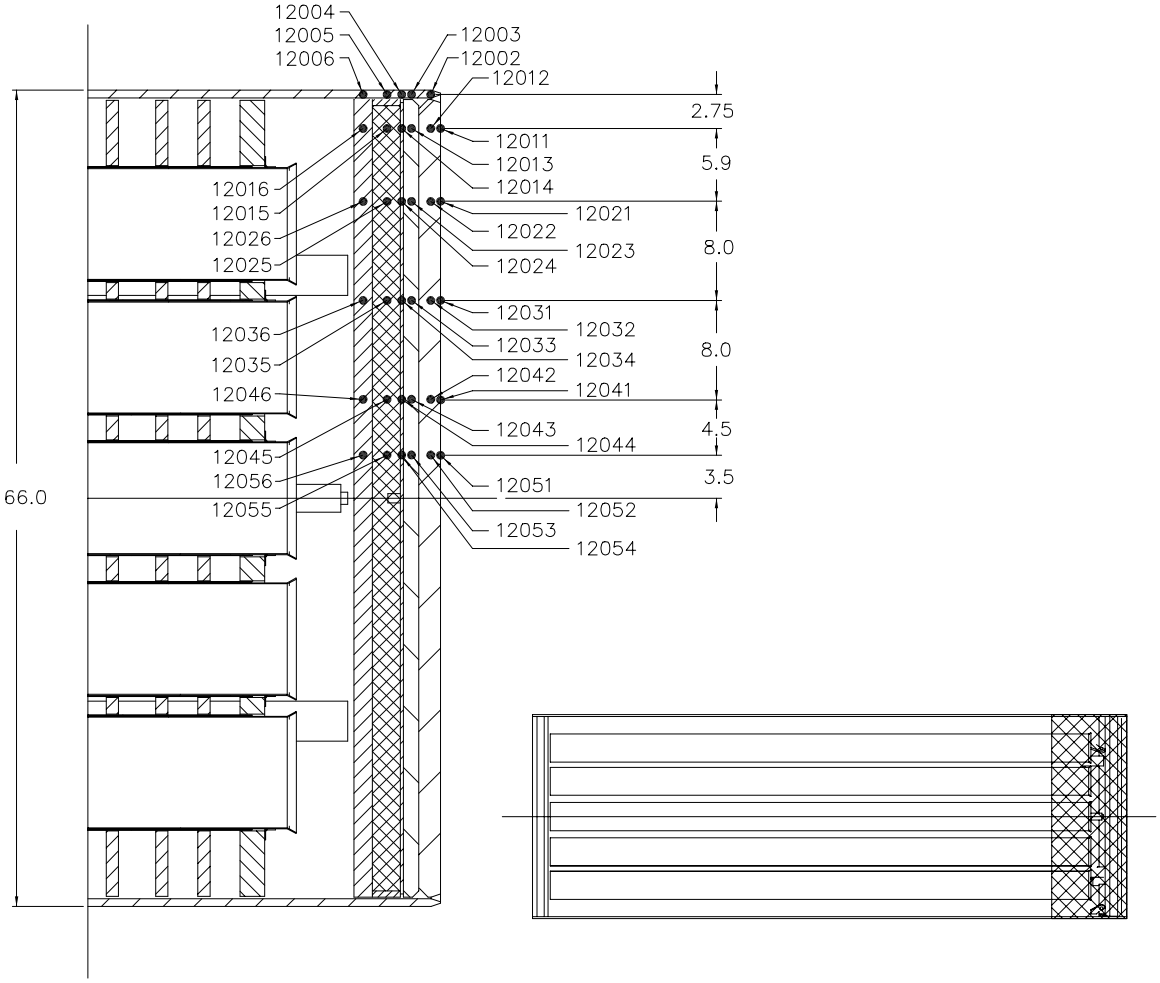

Figure 4.4-7 - Node Layout for W21 Top End

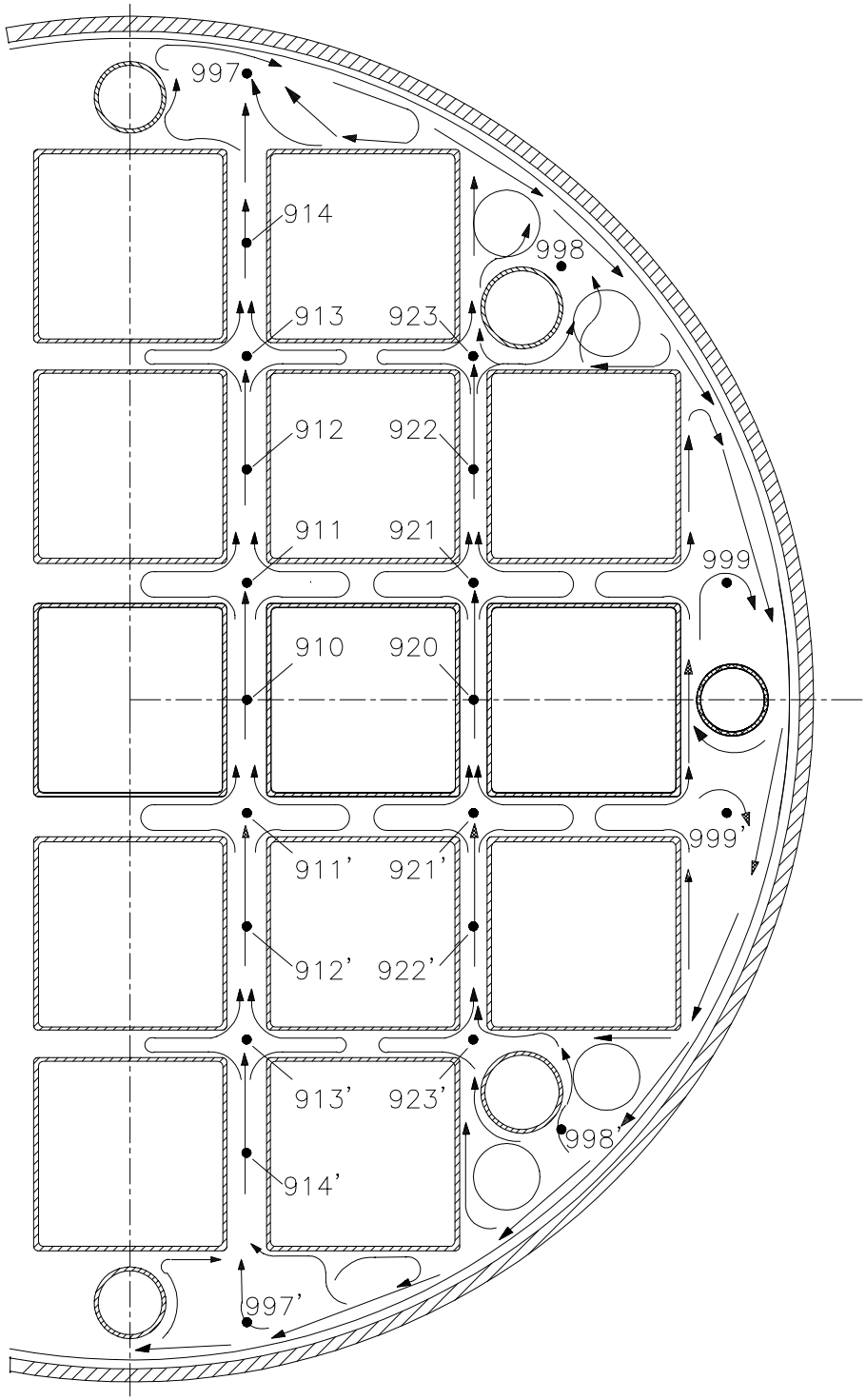

Figure 4.4-8 - Modeled Flow Pattern for Horizontal W21 Canister

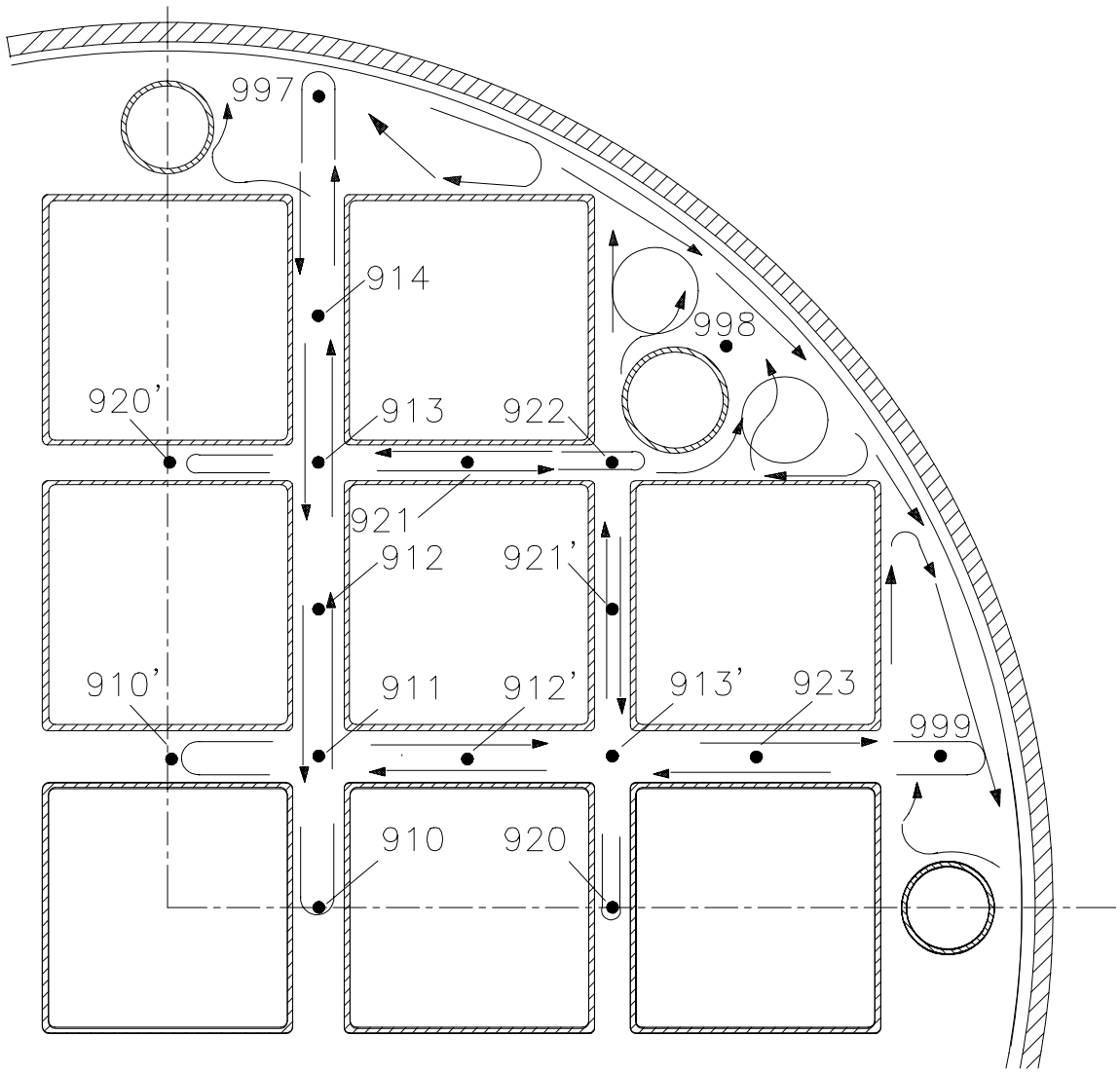

Figure 4.4-9 - Modeled Flow Pattern for Vertical W21 Canister, Horizontal Section

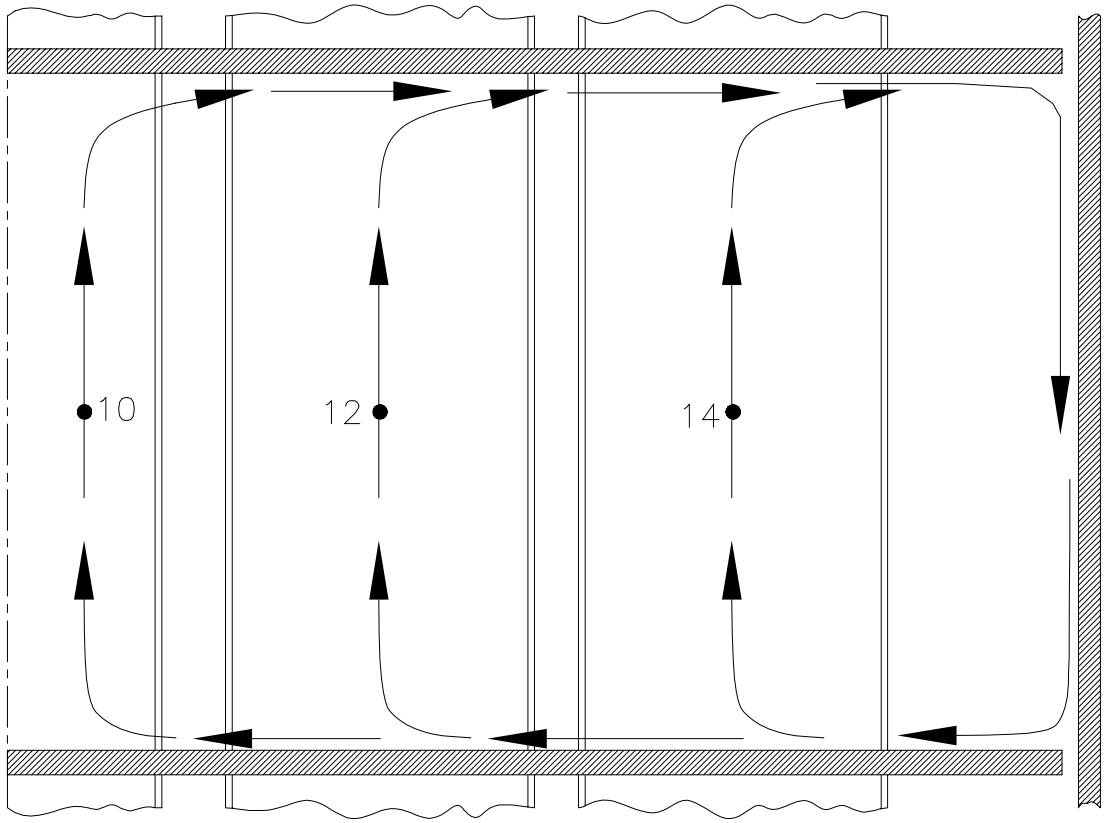

Figure 4.4-10 - Modeled Flow Pattern for Vertical W21 Canister, Vertical Section

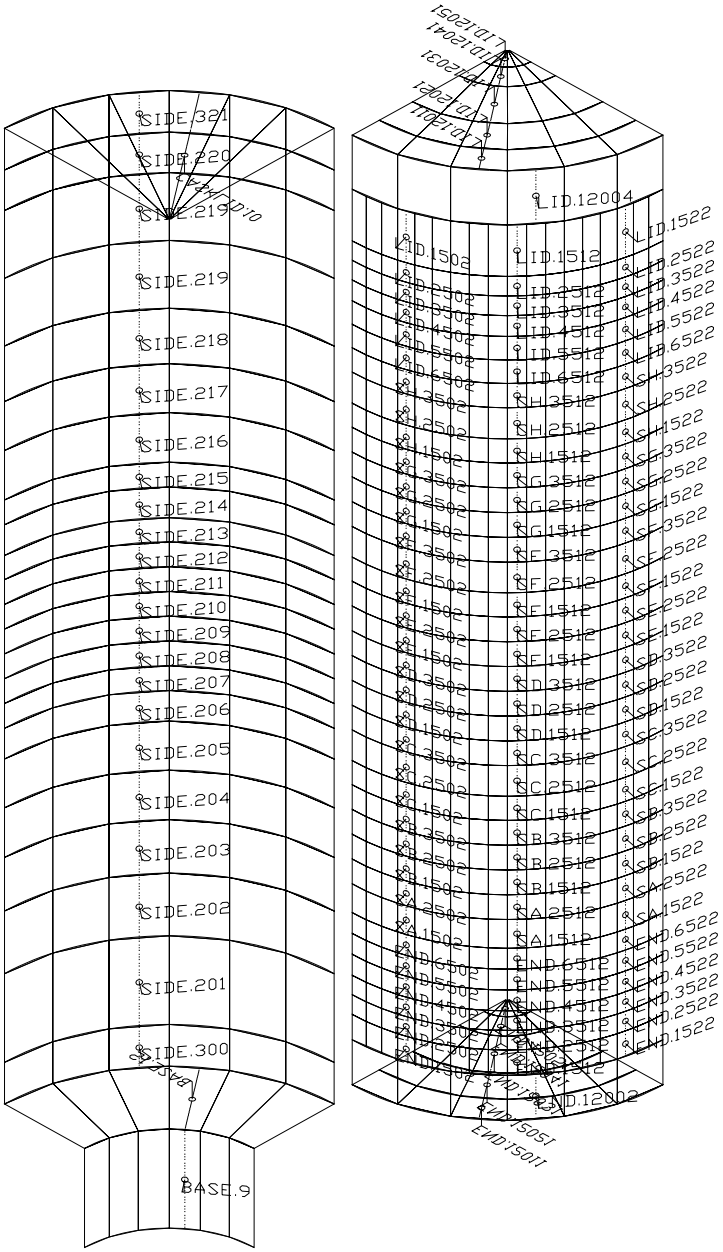

Figure 4.4-11 - Alignment of Thermal Submodels for Storage Cask and W21M-SS Canister

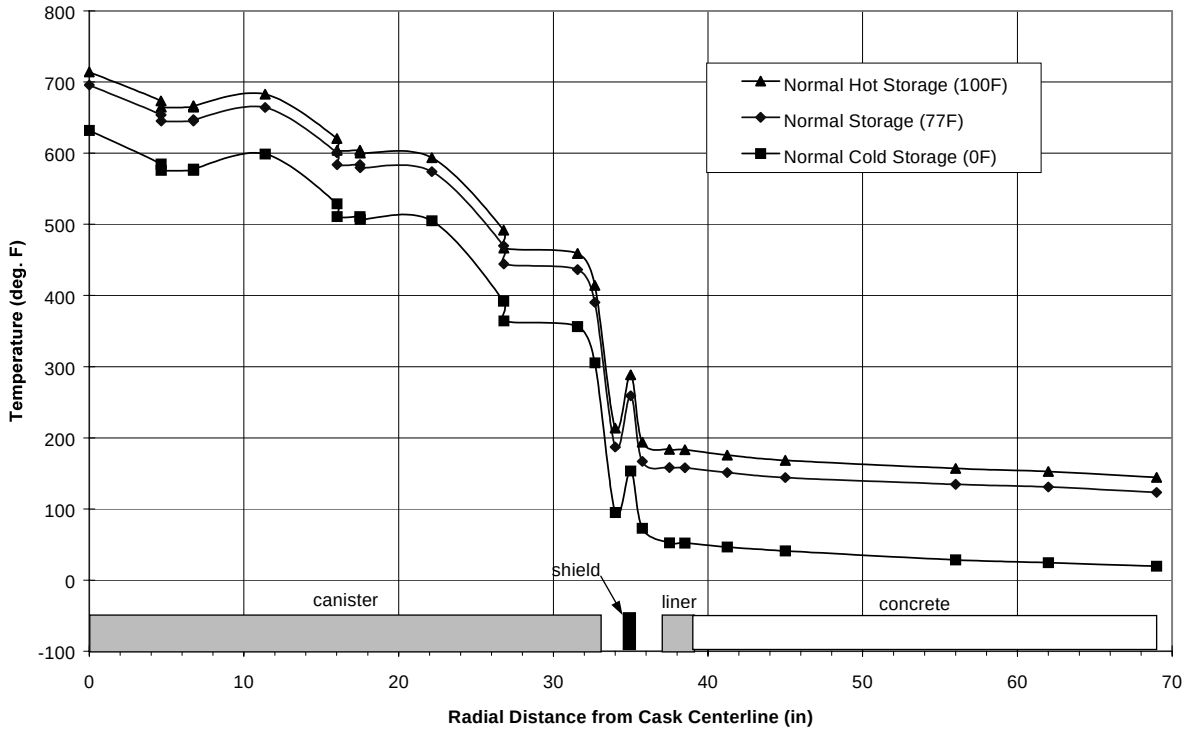

Figure 4.4-12 - Radial Temperature Distribution at Q_{max} for Normal Conditions of Storage

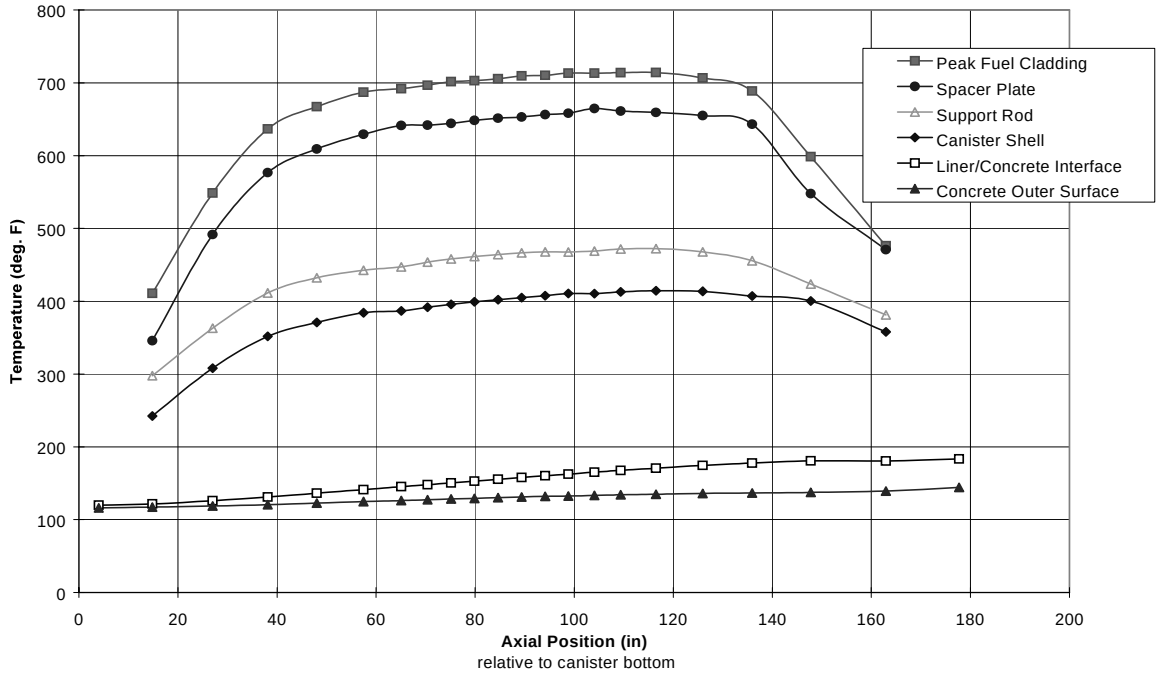

Figure 4.4-13 - W21 Canister Axial Temperature Distribution at Q_{max}, Normal Hot Condition in Storage Cask

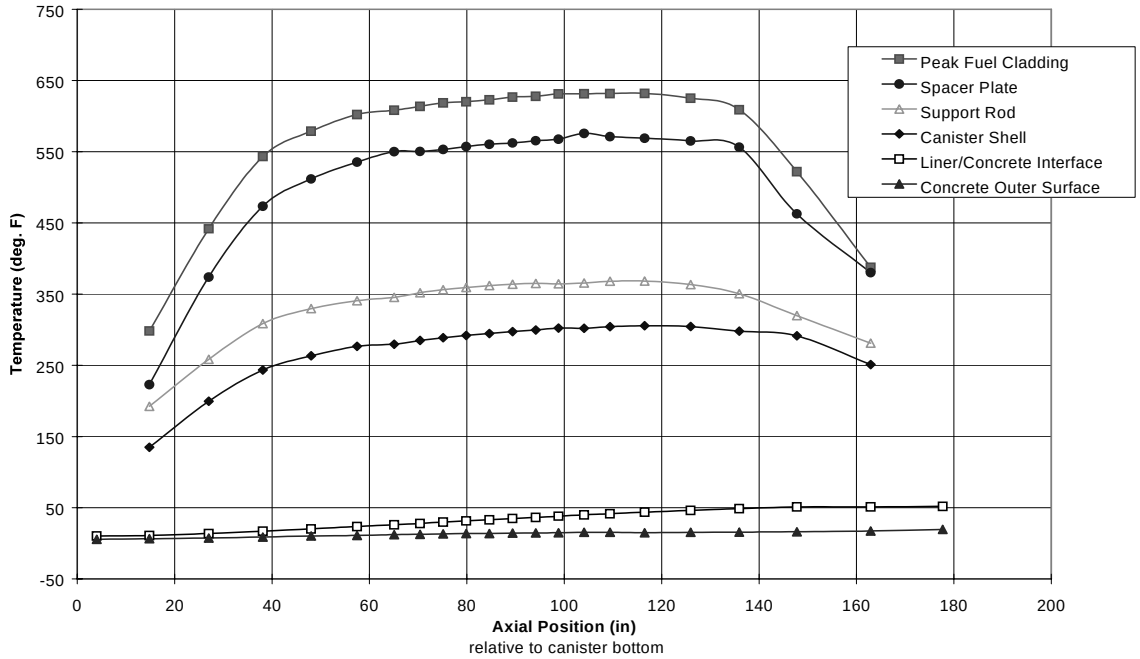

Figure 4.4-14 - W21 Canister Axial Temperature Distribution at Q_{max}, Normal Cold Condition in Storage Cask

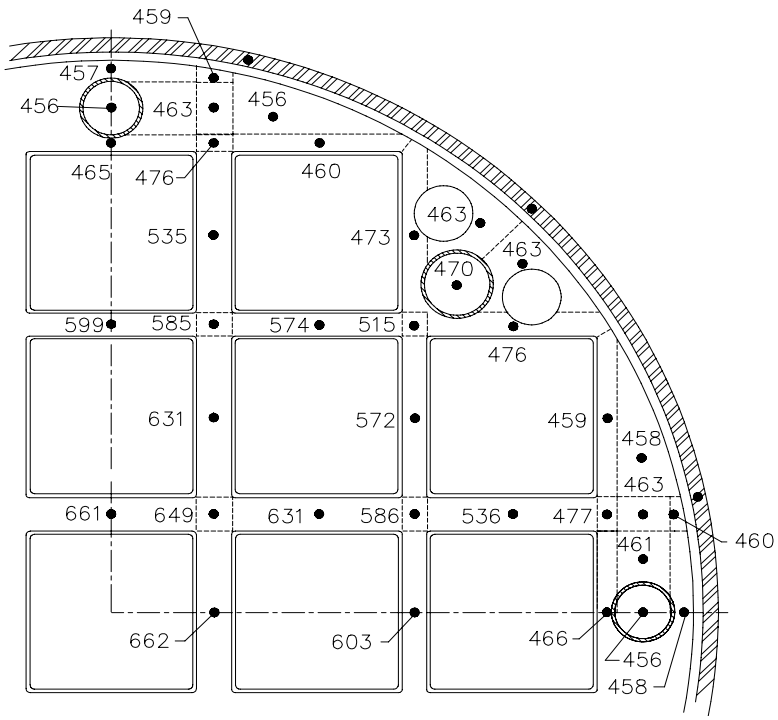

Figure 4.4-15 - Normal Hot Storage, Hottest Carbon Steel Plate

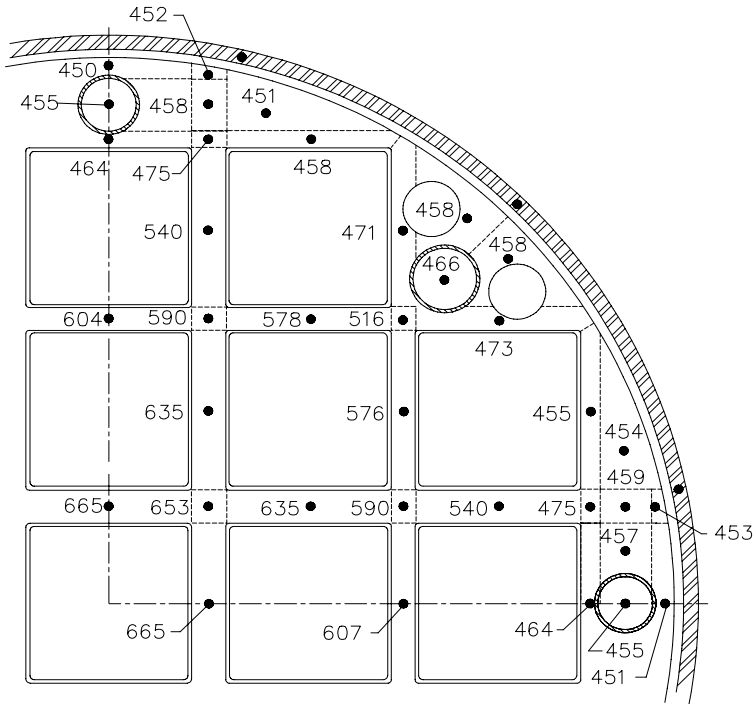

Figure 4.4-16 - Normal Hot Storage, Hottest Stainless Steel Plate

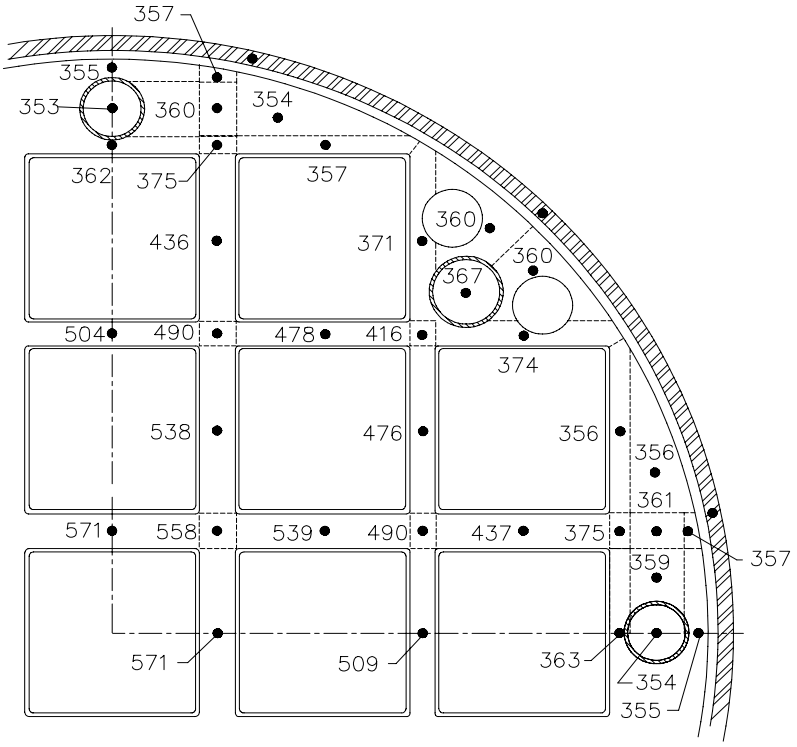

Figure 4.4-17 - Normal Cold Storage, Hottest Carbon Steel Plate

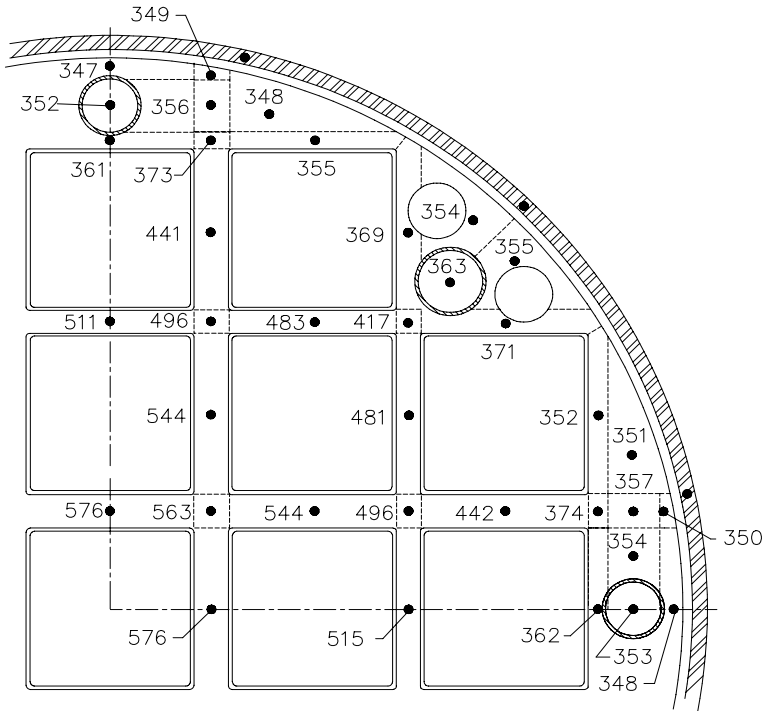

Figure 4.4-18 - Normal Cold Storage, Hottest Stainless Steel Plate

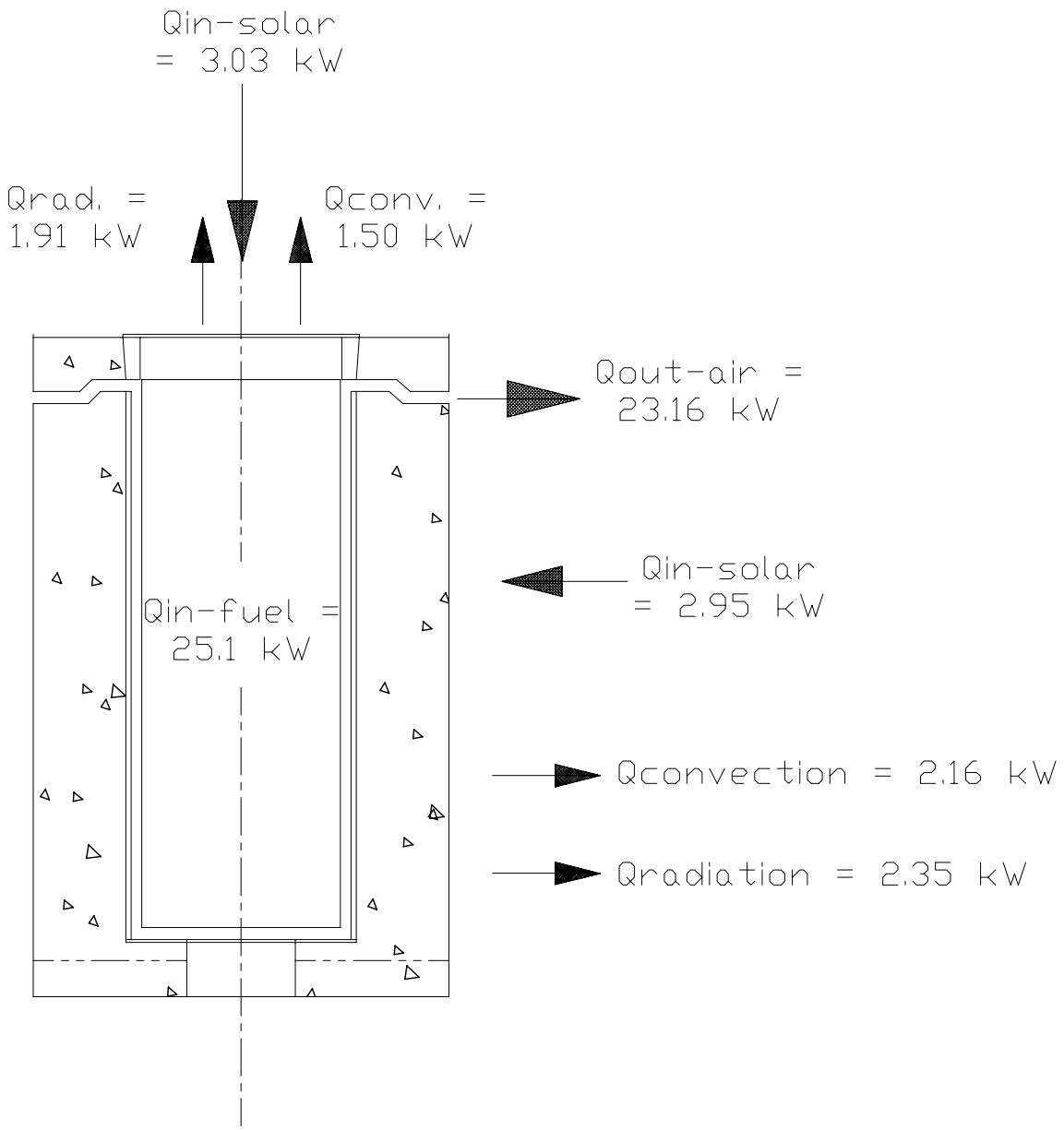

Figure 4.4-19 - W21 Canister Heat Balance within Storage Cask for Normal Hot Storage Conditions at Q_{max}

4.4.2 W21 Canister within Transfer Cask

To validate the performance of the FuelSolutions™ W21 canister within the W100 Transfer Cask under normal conditions of loading, closure, and transfer, the combined thermal model for the W21 canister and the transfer cask is evaluated for the design basis normal ambient conditions presented in Table 4.1-3 using the enveloping W21 canister heat flux profile. The analysis presented herein is designed to establish a thermal rating and to demonstrate that the W21 canister and W100 Transfer Cask allowable material temperatures are not exceeded for the established canister thermal rating at any site within the contiguous United States.

This section presents the thermal analysis of the canister within the transfer cask. The thermal model of the W21 is described, along with a discussion of how the canister thermal model is interfaced with that for the transfer cask. The thermal model for the FuelSolutions™ W100 Transfer Cask is discussed further in Section 4.4.2 of the FuelSolutions™ Storage System FSAR.

The analysis presented herein demonstrates that the acceptance criteria in Section 4.3 is met with the FuelSolutions™ W21 canister in the transfer cask for the enveloping canister decay heat dissipation and at any site within the contiguous United States. Insolation is specified in 10CFR71 for a twelve-hour on, twelve-hour off loading. In order to represent the insolation in the steady-state, the insolation specified is averaged over a twenty-four hour day.

4.4.2.1 W21 Canister Thermal Model in Transfer Cask

The analytical thermal model of the W21 canister in the transfer cask is essentially the same as that used for the analysis in the storage cask (Section 4.4.1.1). As stated previously, the model is developed for use with the SINDA/FLUINT computer program. Section 4.7.4.1 presents an overview of the SINDA/FLUINT program and its past use for the analysis of nuclear systems. The following paragraphs describe the differences in the thermal modeling of the W21 canister between that used for analysis in the storage cask and that used for analysis in the transfer cask. The thermal model of the FuelSolutions™ W100 Transfer Cask is presented in Section 4.4.2 of the FuelSolutions™ Storage System FSAR.

The W21 canister thermal model used for analysis in the transfer cask includes additional modeling for simulating the canister in the horizontal orientation. Modifications to the W21 canister thermal model for simulating the canister in the horizontal orientation consisted of adding model sections “SCBOT,” “SDBOT,” “SEBOT,” and “SFBOT” to complete a 180° representation of the basket assembly over the canister portion that exhibits the highest temperature and thermal gradients. These additional submodels are identical to their upper half counterparts. Thermal connections are provided between the upper and lower halves of the basket assemblies for conduction within the spacer plates and for the convection heat transfer loop. Figure 4.4-8 illustrates the gas flow pattern for convection heat transfer within a horizontal canister.

The modeling of the W21 canister in the transfer cask is accomplished in a similar fashion to that used for the storage cask. Again, the thermal model of the W21M canister assembly is combined with the thermal model of the transfer cask as defined in Section 4.4.2 of the FuelSolutions™

Storage System FSAR. The canister and cask thermal models are brought into the combined thermal model as separate thermal submodels.

The canister is not positioned concentrically within the transfer cask, but rests on two 0.125-inch thick guide rails positioned 45° apart. This eccentric positioning results in a set of non-axisymmetric boundary conditions between the canister and the transfer cask for those load cases that involve the canister in the horizontal orientation. Simulation of this condition is accomplished using the 180° thermal model of the canister and the cask to permit simulation of the variation in gap between the canister shell and the cask inner liner.

4.4.2.2 Conditions During Canister Loading

This section presents evaluations for certain W21 canister operating modes within the W100 Transfer Cask during canister loading. These evaluations demonstrate that the W21 canister vent port is adequate to prevent canister overpressurization during closure operations. As discussed in Chapter 8 of the FuelSolutions™ Storage System FSAR, the transfer cask/canister annulus and the canister cavity may remain filled with water until canister closure operations are completed. If the canister cavity and annulus remain filled with water during extended closure operations, steady-state temperatures could be achieved that result in boiling of the annulus water. Boiling is not desirable from an industrial safety standpoint. Boiling may be prevented by transfer cask/canister annulus water recirculation.

Although the canister cavity water properties (i.e., density, boric acid concentration) are not relied upon for criticality control, it is prudent to prevent boiling. Additionally, the canister venting evaluation demonstrates that the canister shell assembly is not overpressurized beyond the 30 psig blowdown pressure limit defined in the *operating procedures* contained in Section 8.1.8 of the FuelSolutions™ Storage System FSAR. No time restriction is necessary for canister cavity drain down operations.

4.4.2.2.1 Canister Venting Evaluation

The steam to be vented is conservatively assumed to be generated by the canister maximum heat load rating above the ambient losses to the transfer cask when the peak canister shell temperature is at 212°F. Steam is generated at saturation conditions for the maximum assumed canister pressure (30 psig). The 30 psig blowdown pressure limit is based on canister ASME Service Level A allowable stresses for the canister, with the inner closure plate welded in place and the AW/OS and strong-back installed. These saturation conditions define the maximum rate of vaporization, the highest mass flow rate, and the lowest steam density. All of these factors are conservative for calculating the vent flow rate.

In order to demonstrate the adequacy of the W21 canister vent capacity, a pressure drop analysis is performed for the vent path using conservative assumptions for the steam generation rate and a representative canister vent line configuration. A maximum vent flow capacity of 0.0234 lb_m/s is determined based on achieving choked flow conditions for a canister pressure of 30 psig, and considering the pressure drops through each section of the canister vent line. This resulting maximum vent flow capacity corresponds to a maximum 23.0 kW of steam generation, assuming that all heat goes to latent heat of vaporization.

A total heat loss of 11.9 kW (determined in Section 4.4.2.2.2) results from heat losses to the transfer cask with the canister shell outer surface at 212°F. Since the W21 canister maximum heat load rating is 22.0 kW (Table 4.1-4), the total heat load available for steam generation is 10.1 kW (22.0 kW-11.9 kW). The total heat load available for steam generation (10.1 kW) is less than the vent line maximum heat load for steam generation (23.0 kW). This demonstrates that a considerable margin exists between the W21 canister maximum heat generation rate and the limiting vent flow rate.

4.4.2.2.2 Annulus Boiling Evaluation

The transient and steady-state temperature responses of the canister shell are determined from a simplified, one-dimensional analysis. The steady-state model calculates the temperature drop across each successive transfer cask wall material layer for an assumed heat flux from the canister shell. This simplified, one-dimensional model employs a closed-form thermal analysis instead of the SINDA models described above. The temperature distribution is determined from the solution of a thermal network representing the heat transfer through the transfer cask. Heat transfer from the canister outer closure plate to ambient by radiation and convection is included along with the radial heat transfer through the transfer cask wall. Heat is transferred to ambient from the liquid neutron shield shell outer surface by radiation and convection. For the annulus boiling analysis, the canister shell outer surface is assumed to be at 212°F, with the ambient air at 77°F. The steady-state heat transfer rate from the canister surface is 11.9 kW.

Since the W21 canister maximum heat load rating (22.0 kW) is greater than the heat load necessary to cause boiling in the annulus, makeup water may have to be added to the annulus periodically to replace water lost due to boiling and to maintain the water level. Based on the steady-state analysis summarized above, an effective heat transfer coefficient is determined from the canister shell through the transfer cask to ambient.

4.4.2.2.3 Canister Cavity Boiling Evaluation

Section 4.4.2.2.2 stated that canister heat loads in excess of 11.9 kW results in canister shell outer surface temperatures greater than 212°F and the canister cavity above the boiling point. Since the W21 maximum heat load rating is greater than 11.9 kW, the canister cavity water boils at the canister thermal rating. The closed-form thermal analysis spreadsheet described above is again used to determine the time to cavity boiling.

The W21 canister and transfer cask are assumed to start at an initial uniform temperature of 120°F, which is the typical spent fuel pool maximum operating temperature. A representative canister thermal mass is assumed. Canister cavity water is assumed to boil when the guide tube/fuel surface temperature reaches the saturation temperature at 1 atm. Boiling analysis conservatively assumed a canister heat load of 28.0 kW, which is higher than the W21 canister maximum thermal rating (22.0 kW). Under these conservative assumptions, the W21 canister cavity water boils after 18 hours.

Water may be recirculated within the transfer cask/canister annulus to remove canister heat in order to keep the cavity water below the boiling point. Similar to the flow rate evaluation to prevent annulus boiling presented in Section 4.4.2.2.2, canister cavity boiling is prevented by maintaining the canister internals below the saturation temperature at 1 atm. A minimum flow

rate of 1.89 gpm within the transfer cask/canister annulus is necessary to prevent canister cavity boiling.

4.4.2.3 Conditions During Canister Reflooding

In the unlikely event that a W21 canister must be unloaded after an extended period in dry storage, the fuel and canister are flooded with water to allow canister opening and fuel unloading. During canister reflooding, contact of the reflood water with the hot canister internals and fuel rods causes steam generation, which pressurizes the canister shell. The resulting steam generation is evaluated to show that the peak pressure transients experienced during the canister reflood operations do not exceed the canister shell pressure limit (100 psig) in accordance with the *procedures* contained in Section 8.2.3 of the FuelSolutions™ Storage System FSAR.

As discussed in Section 8.2.3 of the FuelSolutions™ Storage System FSAR, transfer cask annulus water recirculation is performed for canister temperature control before and during the reflooding. During canister reflooding operations, quench water is introduced into the cavity through the canister drain line at a maximum flow rate of 10 gpm. The quench water impinges on the hot bottom closure plate and flashes to steam. The saturated steam rises through the canister cavity to the open vent port at the top of the canister. During this process, the saturated steam becomes superheated as it contacts the hot fuel and canister internals. The superheated steam exits through the open canister vent and exhausts to a heat sink, typically the plant's spent fuel pool. As the water level in the canister cavity steadily rises, localized boiling at the top surface of the water (quench front) is expected to occur due to the large amount of heat stored in the canister internals.

Following reflooding, the canister may be further cooled by continuing transfer cask annulus cooling. A specific canister's SNF decay heat, the prevailing ambient conditions, available annulus cooling water parameters, site-specific temperature limitations, and the lead time needed to initiate annulus cooling operations to prevent canister water boiling determine the temperature below which a canister's water should be maintained. Post reflood cool down should be evaluated by the licensee on a site-specific basis.

In addition to the analysis presented herein, the effects of canister reflooding and unloading operations should also be evaluated by the licensee on a site-specific basis to include the following:

- The potential structural loads on the canister vent line.
- Possible siphon effect and resultant canister vacuum, which may result from the site-specific vent system configuration.
- Heat load necessary to condense the discharge steam, including potential effects on stored fuel if the spent fuel pool is used as a heat sink.
- The potential for steam chugging, water hammer, and steam condensation oscillation in the vent line.

The analysis presented in this section conservatively demonstrates that the canister pressure limit of 100 psig is not exceeded during canister reflooding operations. The analysis is based on a W21 canister with conservatively high heat load (Q_{max} = 26.4 kW).

4.4.2.3.1 Spacer Plate Temperature Distribution Prior to Reflood

A transient analysis is performed using the thermal model discussed in Section 4.4.1.1 for canister reflood conditions. The initial conditions for the transient analysis are steady-state conditions with the transfer cask and W21 canister in the vertical orientation with air in the canister cavity and air in the annulus. Since reflooding is performed inside the plant's fuel building, ambient conditions of 77°F with no insolation are assumed. The assumption of air in the canister bounds temperatures seen with a full or partial helium environment. Additionally, a breached canister, resulting in loss of helium backfill gas, is a postulated accident scenario which may require canister unloading.

Annulus water recirculation is initiated at the minimum flow rate of 5 gpm and an inlet temperature of 100°F after the loaded transfer cask is positioned in the unloading area. The typical spacer plate axial temperature distribution after four hours is shown in Figure 4.4-20. This axial temperature distribution corresponds to the start of canister reflooding operations with the introduction of water. The corresponding cavity gas temperature as measured through the canister vent port is 487°F.

For analysis purposes, the spacer plate axial temperature distribution shown in Figure 4.4-20 is conservatively assumed to remain constant throughout the reflood transient. No credit is taken for fog cooling of canister internals by vented superheated steam, continuation of annulus cooling during the reflood, or the increased conduction and cooling effects of filling the canister cavity with water.

4.4.2.3.2 Cladding Thermal Stress

In accordance with NUREG-1536,[12] fuel rod cladding total stresses are evaluated to assume that the fuel rod's total stress is less than the material's yield stress. The total stress includes thermal stress combined with cladding hoop stress. This approach is considered conservative since thermal stresses are typically classified as peak stresses and only considered for fatigue evaluation. Additionally, thermal stresses are self-limiting. Since canister reflooding is an infrequent activity, high cyclic fatigue is not a concern. Rod cladding total stress is compared to test results from EPRI Report TR-103949.[14]

Thermal stresses imposed on fuel rods have been extensively evaluated by LWR fuel vendors, including Westinghouse, during postulated loss-of-coolant accident (LOCA) conditions. In Westinghouse report NFD-E-813,[24] the peak thermal stress reported for an unoxidized zircaloy tube under reactor reflood conditions is 5800 psi (40 Mpa). The cladding thermal stresses from the Westinghouse analysis are presented in Figure 4.4-21.

The Westinghouse thermal stress analysis considered the thermal and mechanical effects of the zirconium oxide layer and used surface heat transfer coefficients appropriate for the mode of heat transfer during rod quenching. The presence of an oxide layer on the fuel rod during quenching results in a significant reduction in the cladding surface effective heat transfer coefficient and the corresponding thermal stress. This is evident on the oxidized cladding curve

[24] NFD-E-813, *Consideration of Thermal Shock on Fuel Rods During the Reflood Phase of a LOCA*, Westinghouse Electric Corporation, April 1973.

in Figure 4.4-21. Since SNF to be stored typically has an oxide layer on the cladding, the thermal stresses within actual fuel assemblies are bounded by the maximum reported by NFD-E-813.[24]

The results presented in NFD-E-813[24] are applicable to canister reflood conditions following dry storage. The thermal stress results presented in NFD-E-813[24] are based on a heat sink (quench water) temperature of 300°F. The saturation temperature corresponding to the maximum W21 canister pressure during reflood (100 psig) is 338°F. Due to the geometry of fuel end fittings and axial spacers and the introduction of quench water through the drain tube, the fuel rods are not directly exposed to the cold quench water (70°F minimum) until the water level rises within the canister cavity. Even if canister saturation conditions for maximum allowable pressure are not achieved before the water level reaches the fuel rods, quench water is pre-heated within the drain tube and by the thermal mass of the canister shell and basket components. Additionally, as discussed in NFD-E-813,[24] if fuel rods are quenched with room temperature water at atmospheric pressure, the initial mode of cooling would be transition boiling instead of nucleate boiling, which tends to reduce the thermal stresses imposed across the cladding.

The fuel assembly temperature at the bottom of the canister is much cooler than the peak fuel rod temperature. As a result, the initial fuel cladding stresses are much less than the maximum reported by NFD-E-813.[24] Additionally, canister and fuel cooling continues during the reflooding operations due to cask/canister annulus cooling, steam venting to the spent fuel pool, and rising water level in the cavity. The peak fuel cladding temperature is significantly reduced before the quench water level reaches the peak axial location.

The maximum thermal stress level for reflood (5800 psi [40 Mpa]) is only a fraction of the maximum rod stress of 333 Mpa calculated in Section 4.3.2.4, corresponding to the short-term allowable cladding temperature of 570°C. Even if the thermal stress is conservatively added to the maximum rod stress, the total rod stress (388 Mpa) is still less than the average rod stress reported in EPRI Report TR-103949,[14] Table A-1 (395 Mpa), for stress-rupture observations of irradiated zircaloys. In summary, thermal stresses induced in the fuel cladding during canister reflooding operations following dry storage are not significant.

Since PWR fuel assemblies from other fuel vendors are similar in design and materials to Westinghouse PWR fuel, the maximum cladding stresses reported in NFD-E-813[24] are expected to be representative of all LWR assemblies which can be accommodated by the W21 canister.

4.4.2.3.3 Canister Pressure During Reflooding

The reflood water is assumed to enter the canister at a maximum temperature of 100°F. The minimum quench water temperature is 70°F based on the fuel cladding stress discussion presented above. The use of the higher quench temperature (100°F) is conservative for analysis purposes since the higher temperature water boils faster and results in a higher canister pressure.

The canister reflood transient is analyzed through the use of a canister mass balance. The mass balance considers the steam generation, caused by contact between the quench water and the hot canister internals, and the vented steam. Any mass imbalance between the steam generation rate and venting rate results in a pressure increase within the canister cavity, which is predicted using the ideal gas equation.

The steam generation rate is determined by performing a heat transfer analysis on the limiting canister internal components, which are the bottom closure plate and the spacer plates.

Conservative assumptions are used to maximize the heat transfer and therefore overestimate the amount of steam generated. The HEATING 7.2f[25] computer code is used to determine the transient steam generation rate for the bottom closure plate. HEATING 7.2f[25] is capable of solving three-dimensional steady-state and transient heat conduction problems and is, therefore, appropriate for this application.

The steam venting rate is determined using the RELAP5[26] computer code, which is a thermal hydraulic finite difference computer program. Conservative assumptions are used to minimize the mass flow rate through the vent system and maximize the canister backpressure.

The first phase of the reflood transient is the initial quench water impingement on the canister cavity bottom closure plate. For steam generation analysis, a stagnant pool of saturated water is assumed to be present above the bottom closure plate at the start of the transient. This is conservative since sensible heat input to the water is neglected. Additionally, the subcooling effect of inlet water at 10 gpm is sufficient to overcome the heat flux from the bottom closure plate, assuring no interruption of quench flow. Heat input from the canister internals directly above the bottom closure plate is considered. The entire bottom closure plate transient is conservatively evaluated at the lowest possible saturation temperature (212°F), and the heat flux reduction for temperatures in the transition boiling regime is ignored.

Since the quick-connect fitting normally installed in the canister vent port has a small throat area which creates a flow restriction, the quick-connect is assumed to be removed prior to reflooding. The vent system configuration assumed for the analysis includes 100 feet of 2-inch corrugated steel hose which discharges steam at the bottom of the spent fuel pool. Typical hose turns, fittings, and exit losses are incorporated into the hose loss coefficient. For the vent capacity evaluation, the steam exit temperature is conservatively assumed to be 800°F.

Once the bottom closure plate pressure transient is completed, the reflood water continues to accumulate within the canister cavity and the water level slowly rises due to the 10 gpm injection flow rate. As the water level rises, canister internals and fuel are cooled. The limiting basket components considered in the analysis are the large spacer plates located throughout the axial length of the canister. The relatively small linear mass of the fuel, guide tubes, support rods, and shell do not produce significant steam generation compared to the spacer plates. The carbon steel spacer plates, although thinner than the stainless spacer plates, are the bounding components for steam generation during the remaining canister reflood transient. The carbon steel spacer plates have a higher conductivity and higher ratio of surface area to mass than the stainless steel plates and therefore release heat at a much faster rate.

The large initial temperature difference between the quench water and the spacer plates produces film boiling, thus limiting the heat flux. As the spacer plate surface temperature drops to the nucleate boiling range, the heat flux increases significantly, resulting in a high rate of steam generation. The mass balance between the steam generation rate and the vent capacity results in a canister pressure increase.

---

[25] ORNL/TM-12262, HEATING 7.2f Computer Code, *Multi-Dimensional Finite-Difference Heat Conduction Analysis*, Oak Ridge National Laboratory, February 1993.

[26] RELAP5 Computer Code, Version MOD 3.1.

The mass balance between the steam generation rate and the vent capacity during the bottom closure plate quench transient results in a maximum canister pressure of 12 psig, which is well below the 100 psig maximum reflood pressure. The reflooding process yields a series of transient pressure increases due to spacer plate quenching with rising cavity water level. The mass balance for the limiting spacer plate quench transient results in a peak canister pressure of 70 psig, which is also well below the 100 psig maximum reflood pressure. The limiting spacer plate pressure transient is presented graphically in Figure 4.4-22.

The 10 gpm maximum quench flow rate assures that only one spacer plate is generating steam at a given time. As can be seen in Figure 4.4-22, the spacer plate quench transient duration is much faster than the time required for the quench water level to progress between spacer plates.

4.4.2.4 Maximum Temperatures

The maximum temperatures for the W21 canister components are determined for the design basis normal condition thermal load cases, specifically cases 13, 14, and 15, as defined in Table 4.1-3. These normal conditions assume a horizontal transfer cask and canister; ambient conditions of 0°F, 77°F, and 100°F. The analysis is conducted for the two bounding W21 canister heat load profiles illustrated in Figure 4.1-1 (i.e., the “max. thermal” and the “max. thermal gradient” profiles) and for operations for the maximum canister thermal ratings. Given that the short-term fuel cladding allowable temperature is 400°C regardless of burnup level and that the canister thermal rating is based on the long-term allowable cladding temperature established for high burnup fuel, the transfer cask temperature evaluations apply for PWR burnup levels up to 60 GWd/MTU.

The system temperatures resulting from normal condition operation in the transfer cask are presented in Table 4.4-7 for the “max. thermal” heat profile. All temperatures in the table are computed using steady-state analysis and are based on operations at the 25.1 kW structural thermal rating of the W21 canister in the transfer cask. The thermal results for the “max. thermal gradient” heat profile, also at the structural thermal rating for the W21 canister, are presented in Table 4.4-8.

Despite the conservatively high heat loads assumed for the analyses, all W21 canister component temperatures are within their material allowable temperatures for each load case. As such, greater thermal margins than indicated in the tables will exist for operations under the W21 heat load ratings of 22.0 and 13.4 kW for Q_{max} and $LHGR_{max}$, respectively. The limiting component in each case is typically the peak fuel cladding temperature since the short-term allowable temperature under transfer conditions is 400°C.

In addition to the canister temperatures, temperatures for the transfer cask at selected locations are also presented. For comparison purposes, the same selected transfer cask temperatures from the FuelSolutions™ Storage System FSAR are shown at the bottom of the table. The full presentation of the transfer cask temperatures is contained in Section 4.4.2 of the FuelSolutions™ Storage System FSAR. As expected, since the transfer cask thermal rating is higher (i.e., 28 kW) than the W21 canister thermal rating, the analyses in the FuelSolutions™ Storage System FSAR bound the cask material temperatures resulting from operations with the W21 canister. This result assures that the design basis established for the transfer cask in the FuelSolutions™ Storage System FSAR bounds that of the W21 canister in the transfer cask.

Figure 4.4-24 and Figure 4.4-25 present representative axial temperature distributions within the components of the W21 canister and the transfer cask for the normal hot and normal cold conditions of transfer, respectively, and with the “max. thermal” heat load profile. The profiles are for the higher canister structural heat load rating of 25.1 kW. The variation in the heat load with axial position is clearly visible in the plots. Unlike the axial temperature distribution in the storage cask, the temperatures in the basket illustrate a near symmetric distribution about the peak temperature point. This is due to the absence of temperature stratification along the length of the canister.

Similar axial profiles for the “max. thermal gradient” heat profile through the canister and transfer cask are presented in Figure 4.4-26 and Figure 4.4-27 for the normal hot (case 15) and normal cold (case 14) conditions of transfer, respectively. Again, the profiles are for the higher canister structural heat load rating of 15.3 kW. The effect of the shorter active fuel region (i.e., 91" versus 150") is apparent in the concentration of temperature distribution within the basket.

Figure 4.4-28 to Figure 4.4-31 present the temperature distribution within the hottest carbon steel and stainless steel spacer plates for the same normal hot and normal cold conditions of transfer, respectively. The temperature results in the plots illustrate the expected asymmetric conditions with the canister in the horizontal orientation.

As shown in Table 4.4-9, the results for cask handling (case 10) show that the allowable temperatures are exceeded under steady-state conditions for the peak fuel cladding and for selected areas on the carbon steel spacer plates when the canister-cask annulus is filled with air. However, allowable temperatures are not exceeded if the annulus is filled with water. Evaluation of the transient temperature response (Figure 4.4-33) shows that approximately 24 hours is available once the canister-cask annulus is drained before the long-term allowable temperatures for the carbon steel spacer plates are exceeded. At the time when the spacer plate temperatures reach their limit, the peak fuel clad temperature will be just under its limit of 400°C.

Figure 4.4-33 presents the transient response of the peak fuel cladding, peak spacer plate, canister shell, and the transfer cask inner shell and lead shield following the draining of the canister-cask annulus. As seen from the transient plot, the steady-state conditions are essentially established after about 50 hours following the canister-cask annulus draining. However, after about 24 hours, the peak carbon steel spacer plate temperatures exceed their long-term allowable temperature of 700°F, and the fuel cladding exceeds its short-term allowable limit of 400°C. The 24-hour time period forms the basis for a *technical specification* presented in Section 12.3 of this FSAR. Given that the transient analysis is based on a canister heat load of 25.1 kW, the use of the 24-hour limit will conservatively bound the actual time available under the rated canister heat load of 22.0 kW.

4.4.2.5 Minimum Temperatures

The temperatures for the W21 canister components under normal cold conditions are listed in Table 4.4-7 and Table 4.4-8 for the two heat load profiles evaluated. The temperatures shown are for the W21 canister structural thermal rating (25.1 kW) and therefore do not represent the lowest expected component temperatures. The results bound the thermal gradients that will occur with the rated canister heat load of 22.0 kW.

The low temperature compatibility of the W21 canister and transfer cask is evaluated for the bounding case of 0°F ambient temperature, zero decay heat load, and no insolation. The steady-state temperatures of the W21 canister and transfer cask for this analytically trivial case are 0°F. The component temperatures are within minimum allowable material temperatures in all cases.

Transient analysis is presented in Section 4.5.2.3 of the FuelSolutions™ Storage System FSAR to illustrate the time frame available when operating in freezing weather. An associated *technical specification* is established, as presented in Section 12.3 of the FuelSolutions™ Storage System FSAR, based on a bounding transient analysis which assumes no decay heat load.

4.4.2.6 Internal Pressures

W21 canister normal internal pressures for transfer are a function of the maximum canister pressurization established for normal hot conditions of storage (i.e., 24 psia) and the ideal gas law variation for the W21 canister temperatures within the transfer cask. W21 canister normal internal pressures are presented in Table 4.4-10. Since the average canister gas temperature within the transfer cask under the “max. thermal” heat load profile bounds the average canister gas temperature within the transfer cask under the “max. thermal gradient” heat load profile, the resulting internal pressures presented in the tables are also bounding. These canister internal pressures consider only the canister helium backfill gas and helium bulk temperature. No rod failures are assumed.

Since the canister thermal rating is lower than the transfer cask thermal rating, the liquid neutron shield internal pressure is bounded by that presented in Section 4.4.2 of the FuelSolutions™ Storage System FSAR.

Peak canister internal pressure during reflood operations is discussed in Section 4.4.2.3 of this FSAR.

4.4.2.7 Maximum Thermal Stresses

The maximum thermal stresses developed in the W21 canister under normal transfer conditions are addressed in Section 3.5.1 of this FSAR. Calculation of these thermal stresses is based on the maximum canister structure heat load of 25.1 kW, and is conservative (bounding) for the actual canister heat rating of 22.0 kW.

4.4.2.8 Evaluation of Canister Performance for Normal Conditions

The results of the steady-state analyses demonstrate that the W21 canister and transfer cask allowable material temperatures under normal conditions are met for the maximum canister thermal rating, of 25.1 kW. As such, the demonstrated thermal margins will be even greater for operations under the actual canister heat load rating of 22.0 kW, as presented in Table 4.1-4. Therefore, the W21 canister is suitable for the loading, closure, and transfer of PWR fuel within the FuelSolutions™ W100 Transfer Cask. The W21 canister is qualified for 22.0 kW for transfer within the transfer cask.

Figure 4.4-32 presents the W21 canister heat balance for normal hot transfer conditions at the structural heat load rating (Q_{max}). Heat into the transfer cask is from the spent fuel (25.1 kW, at the structural heat load rating) and insolation (1.9 kW), with the remaining heat (27.0 kW) lost passively to ambient through natural convection and radiation.

The canister pressurization for normal conditions of transfer is within the design pressure for the canister. Additionally, conservative analysis demonstrates that the peak canister pressure during reflood operations remains below the design basis reflood pressure for the canister (100 psig).

Table 4.4-7 - Maximum W21 Canister System Temperatures for Normal Transfer at Q_{max} (1)

Component	Case 13 Normal Transfer	Case 14 Normal Cold Transfer	Case 15 Normal Hot Transfer	Material Allowable(5)
Peak Fuel Rod Cladding	378.9°C	362.8°C	382.0°C	400°C
Guide Tube	670°F	640°F	676°F	800°F
Spacer Plates:				
Stainless Steel	658°F	626°F	665°F	800°F
Carbon Steel	662°F	629°F	668°F	700°F
Support Rod	593°F	562°F	599°F	650°F
Helium Bulk Temp.	575°F	540°F	582°F	N/A
Canister Shell	521°F	488°F	528°F	800°F
Cask Inner Shell	311°F	264°F	322°F	800°F
Cask Lead Shield	307°F	260°F	319°F	620°F
Cask Structural Shell	229°F	169°F	245°F	800°F
Liquid Neutron Shield	203°F	139°F	219°F	293°F(6)
Neutron Shield Pressure(2)	14.7 psia	14.7 psia	17.1 psia	60 psia(6)
Cask Thermocouple(3)	227°F	167°F	242°F	N/A
Reference Results from Table 4.4-11 of the FuelSolutions™ Storage System FSAR				
Cask Lead(4)	*332°F*	*281°F*	*346°F*	--
Cask Thermocouple(3,4)	*240°F*	*180°F*	*257°F*	--

Notes:

(1) Except as noted, temperatures in this table are based on a heat load of 25.1 kW.
(2) Neutron shield pressure based on fill and sealing at room temperature and average liquid temperature. It does not account for system pressurization due to system design head pressure or losses.
(3) Estimated thermocouple reading for analyzed condition.
(4) Temperatures based on heat load of 28 kW.
(5) Canister allowable temperatures are from Table 4.3-1. Transfer cask material allowable temperatures are from Table 4.3-2 of the FuelSolutions™ Storage System FSAR.
(6) Neutron shield allowable pressure and allowable temperature are taken from Table 2.0-1 of the FuelSolutions™ Storage System FSAR.

Table 4.4-8 - Maximum W21 Canister System Temperatures for Normal Transfer at $LHGR_{max}$ (1)

Component	Case 13 Normal Transfer	Case 14 Normal Cold Transfer	Case 15 Normal Hot Transfer	Material Allowable(5)
Peak Fuel Rod Cladding	362.1°C	345.3°C	366.0°C	400°C
Guide Tube	638°F	607°F	646°F	800°F
Spacer Plates:				
Stainless Steel	627°F	592°F	635°F	800°F
Carbon Steel	627°F	595°F	635°F	700°F
Support Rod	563°F	530°F	571°F	650°F
Helium Bulk Temp.	413°F	369°F	424°F	N/A
Canister Shell	495°F	460°F	503°F	800°F
Cask Inner Shell	284°F	234°F	298°F	800°F
Cask Lead Shield	281°F	230°F	294°F	620°F
Cask Outer Shell	205°F	142°F	221°F	800°F
Liquid Neutron Shield	163°F	94°F	181°F	293°F(6)
Neutron Shield Pressure(2)	14.7 psia	14.7 psia	14.7 psia	60 psia(6)
Cask Thermocouple(3)	179°F	115°F	197°F	N/A
Reference Table 4.4-11 of the FuelSolutions™ Storage System FSAR.				
Cask Lead(4)	*N/A*	*N/A*	*352 °F*	--
Cask Thermocouple(3,4)	*N/A*	*N/A*	*233 °F*	--

Notes:

(1) Except as noted, temperatures in this table are based on a heat load of 15.3 kW with the "max. thermal gradient" profile.
(2) Neutron shield pressure based on fill and sealing at room temperature and average liquid temperature. It does not account for system pressurization due to system design head pressure or losses.
(3) Estimated thermocouple reading for analyzed condition.
(4) Temperatures based on heat load of 21 kW with the "max. thermal gradient" profile.
(5) Canister allowable temperatures are from Table 4.3-1. Transfer cask material allowable temperatures are from Table 4.3-2 of the FuelSolutions™ Storage System FSAR.
(6) Neutron shield allowable pressure and allowable temperature are taken from Table 2.0-1 of the FuelSolutions™ Storage System FSAR.

Table 4.4-9 - W21 Canister System Temperatures During Handling[1]

Component	Case 10		Material Allowable[5]
	w/ Air In Annulus[3]	w/ Water In Annulus[4]	
Peak Fuel Rod Cladding	453.3°C	277.4°C	400°C
Guide Tube	816°F	476°F	800°F
Spacer Plates:			
Stainless Steel	807°F	465°F	800°F
Carbon Steel	805°F	459°F	700°F
Support Rod	621°F	245°F	650°F
Helium Bulk Temp.	633°F	305°F	N/A
Canister Shell	576°F	167°F	800°F
Cask Inner Shell	307°F	141°F	800°F
Cask Lead Shield	304°F	141°F	620°F
Cask Outer Shell	234°F	120°F	800°F
Liquid Neutron Shield	209°F	111°F	293°F[6]
Neutron Shield Pressure	20.0 psia	14.7 psia	60 psia[6]
Cask Thermocouple[2]	73°F	111°F	N/A

Notes:

(1) Temperatures in this table are based on a heat load of 25.1 kW with the "max. thermal" profile.
(2) Estimated thermocouple reading for analyzed condition.
(3) Results for steady state operation. Fuel cladding and spacer plate temperatures reach their limits of 400°C and 700°F, respectively, roughly 24 hours after drainage of the annulus.
(4) Water temperature assumed to be near boiling (212°F). Makeup water is added for any water lost to boiling or evaporation. (Cask in vertical orientation.)
(5) Canister allowable temperatures are from Table 4.3-1. Transfer cask material allowable temperatures are from Table 4.3-2 of the FuelSolutions™ Storage System FSAR.
(6) Neutron shield allowable pressure and allowable temperature are taken from Table 2.0-1 of the FuelSolutions™ Storage System FSAR.

Table 4.4-10 - W21 Canister Pressures for Normal Transfer at Q_{max}[(1)]

Parameter	Case 13 Normal Transfer	Case 14 Normal Cold Transfer	Case 15 Normal Hot Transfer
Helium Bulk	575°F	540°F	582°F
Helium Pressure[(2)]	26.1 psia	25.2 psia	26.3 psia

Notes:

(1) Temperatures/pressures in this table are based on a heat load of 25.1 kW.

(2) Estimated canister pressure based on a design pressure of 24 psia at "normal hot storage" condition and ideal gas law. Pressurization due to fuel rod failure is not included.

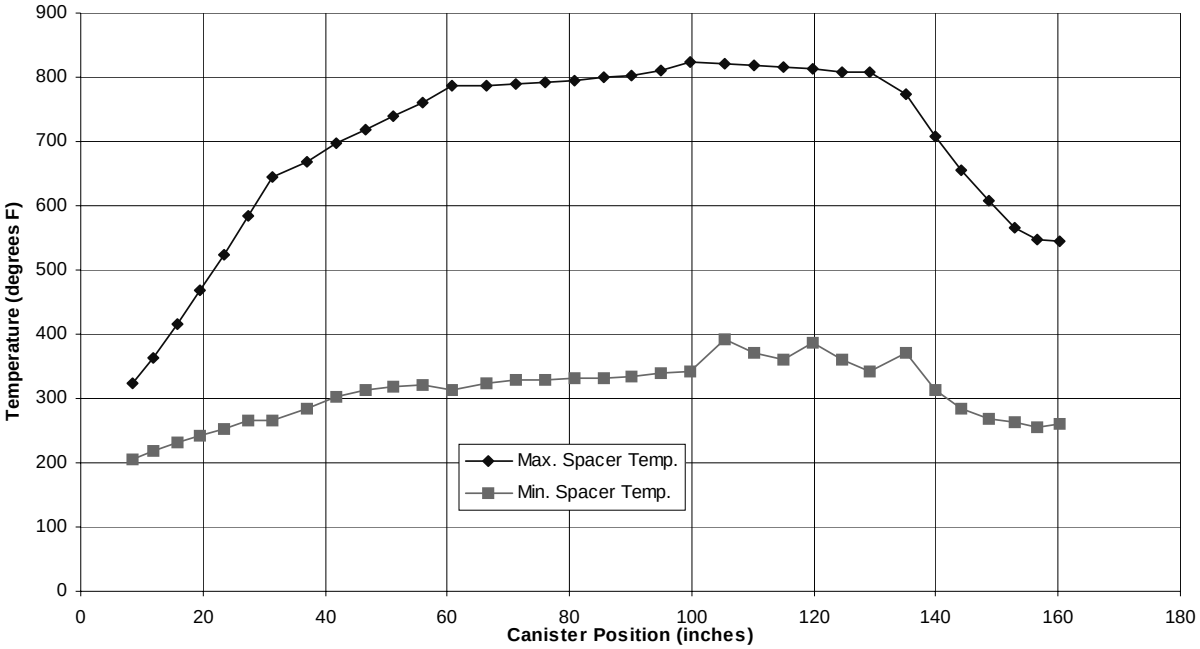

Figure 4.4-20 - W21 Canister Axial Temperature Distribution Prior to Reflood

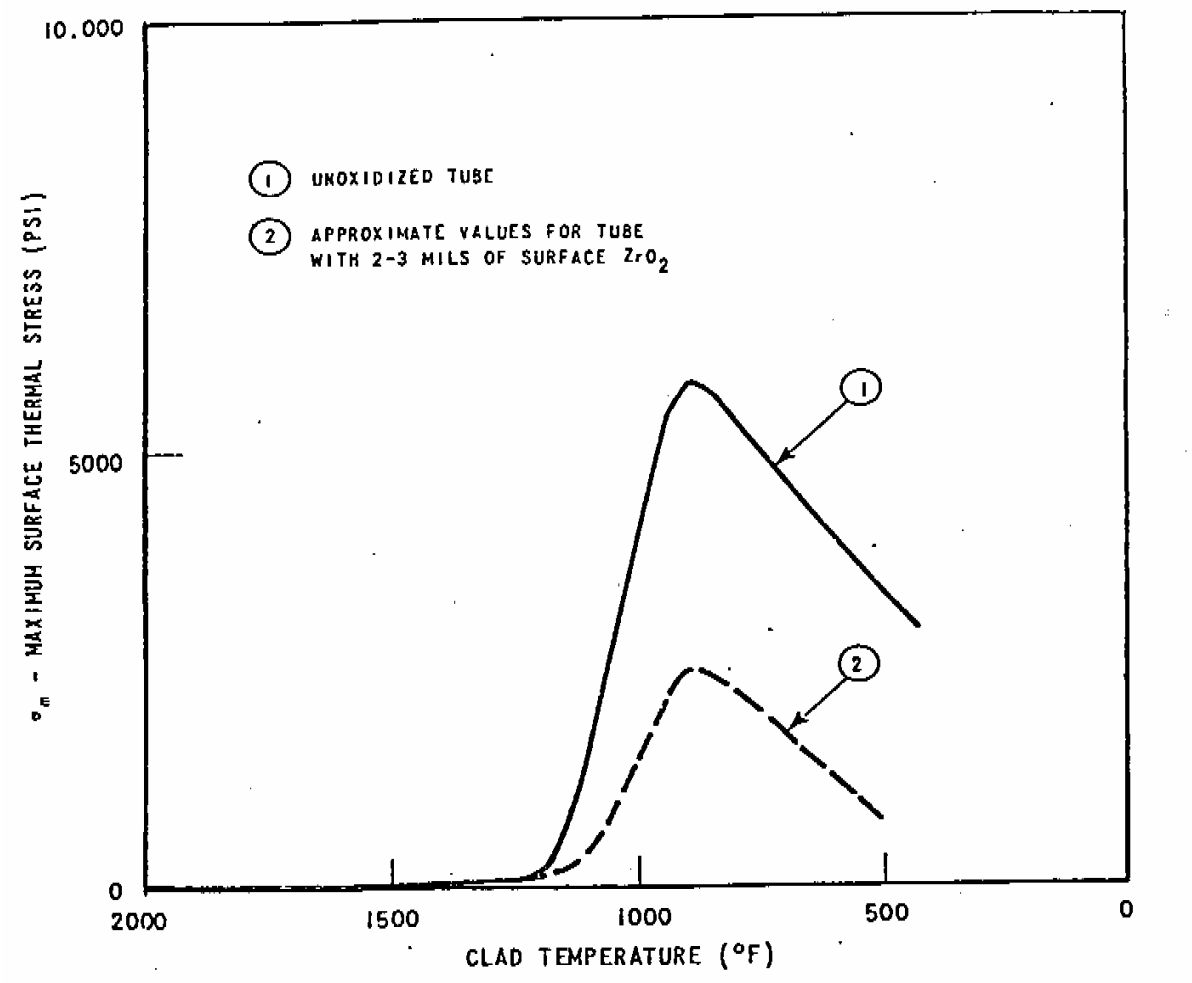

Figure 4.4-21 - Clad Thermal Stress During Core Reflooding

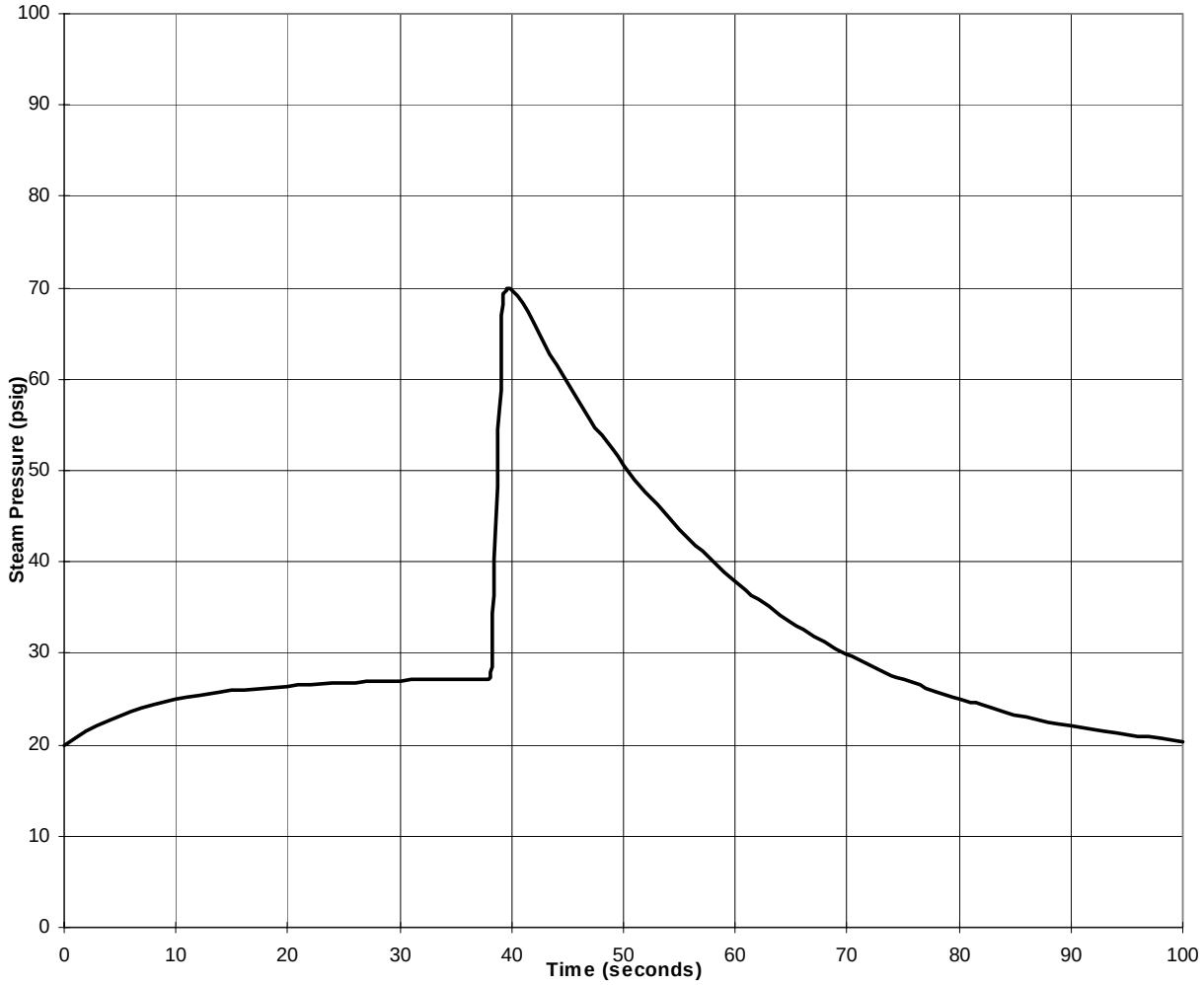

Figure 4.4-22 - Canister Pressure During Limiting Spacer Plate Quenching

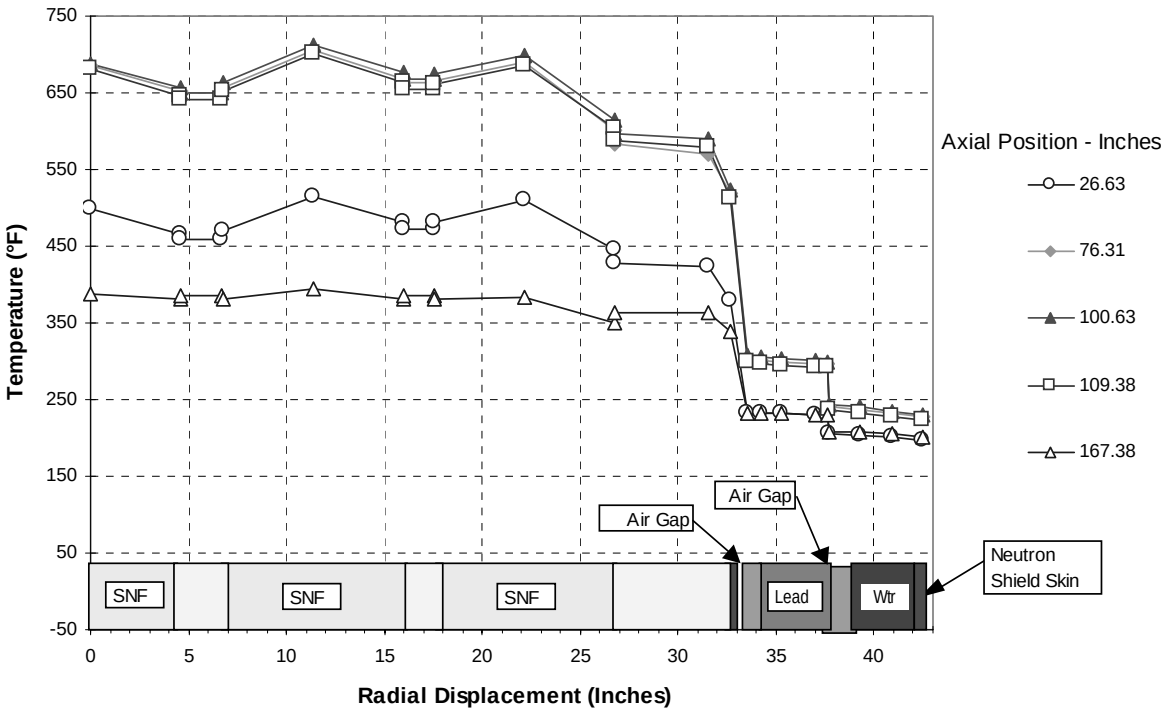

Figure 4.4-23 - Radial Temperature Distribution for Normal Hot Transfer Conditions at Q_{max}

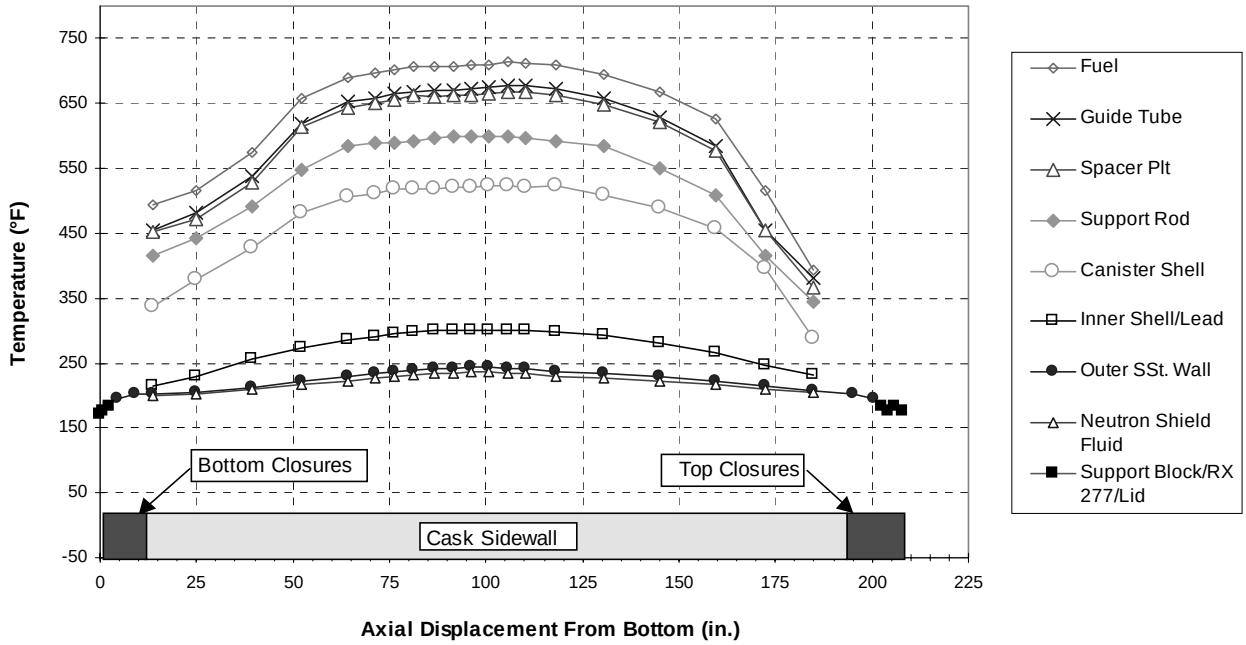

Figure 4.4-24 - W21 Canister Axial Temperature Distribution for Normal Hot Condition in Transfer Cask at Q_{max}

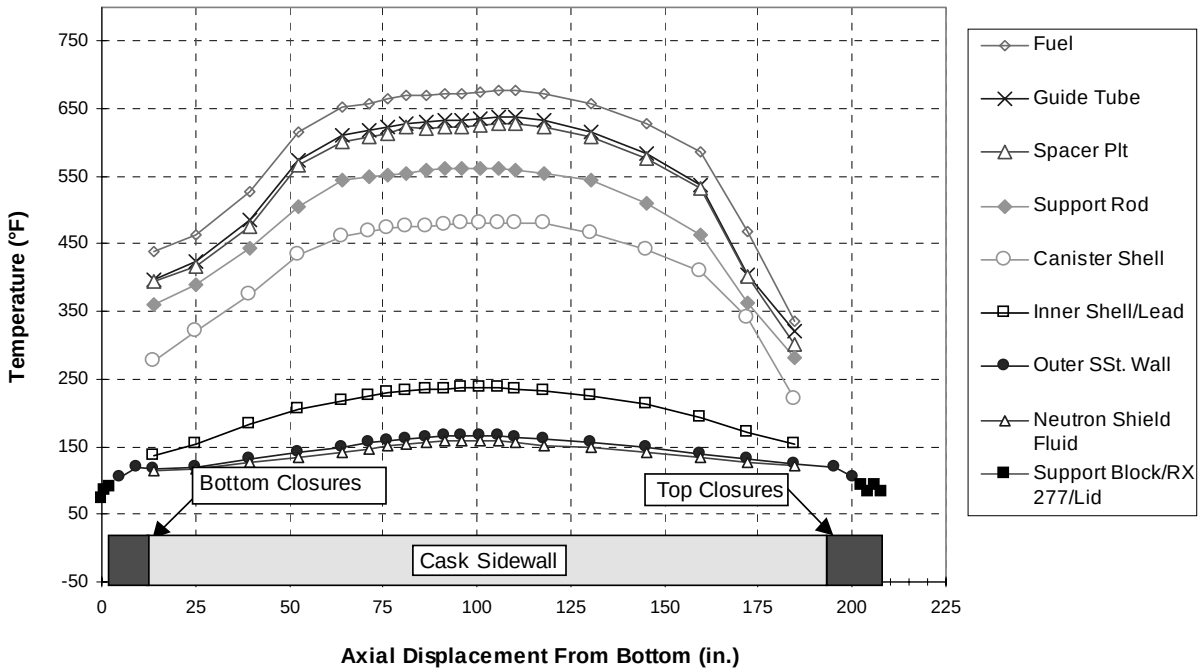

Figure 4.4-25 - W21 Canister Axial Temperature Distribution for Normal Cold Condition in Transfer Cask at Q_{max}

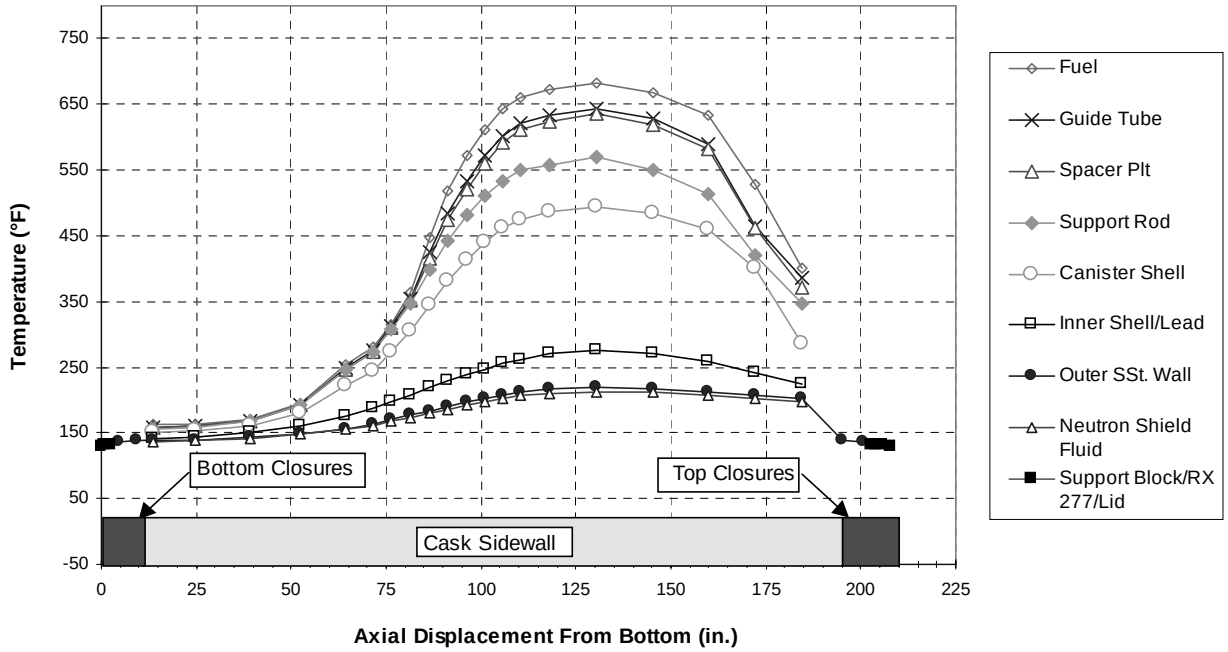

Figure 4.4-26 - W21 Canister Axial Temperature Distribution for Normal Hot Condition in Transfer Cask at $LHGR_{max}$

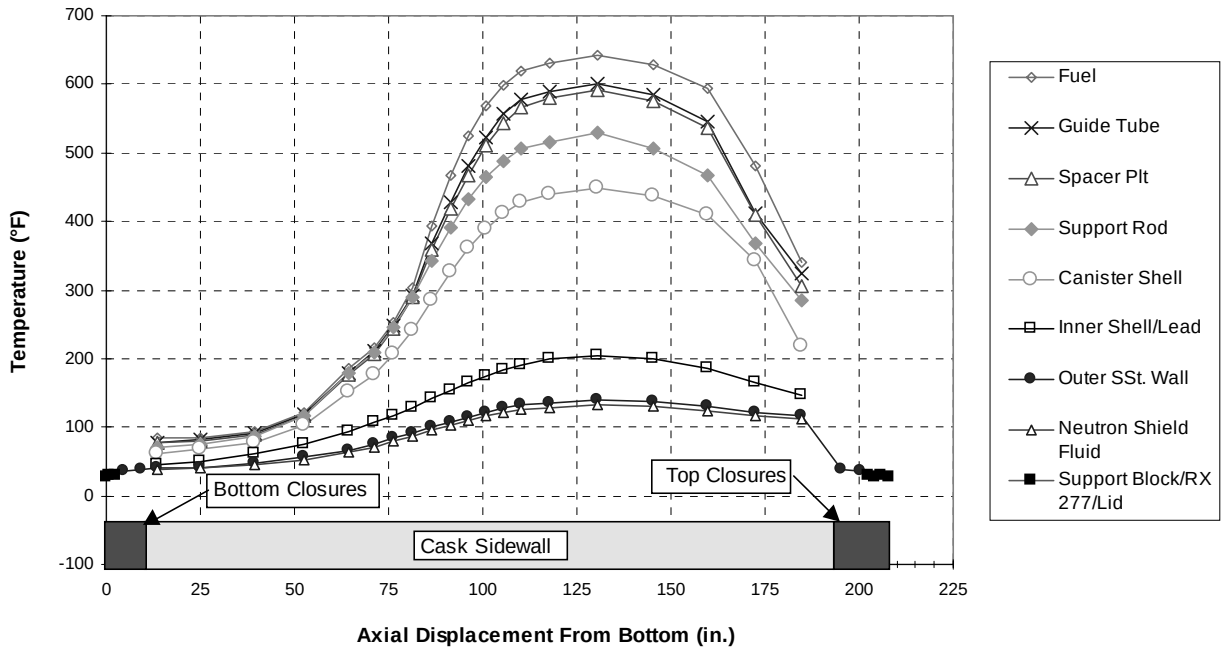

Figure 4.4-27 - W21 Canister Axial Temperature Distribution for Normal Cold Condition in Transfer Cask at $LHGR_{max}$

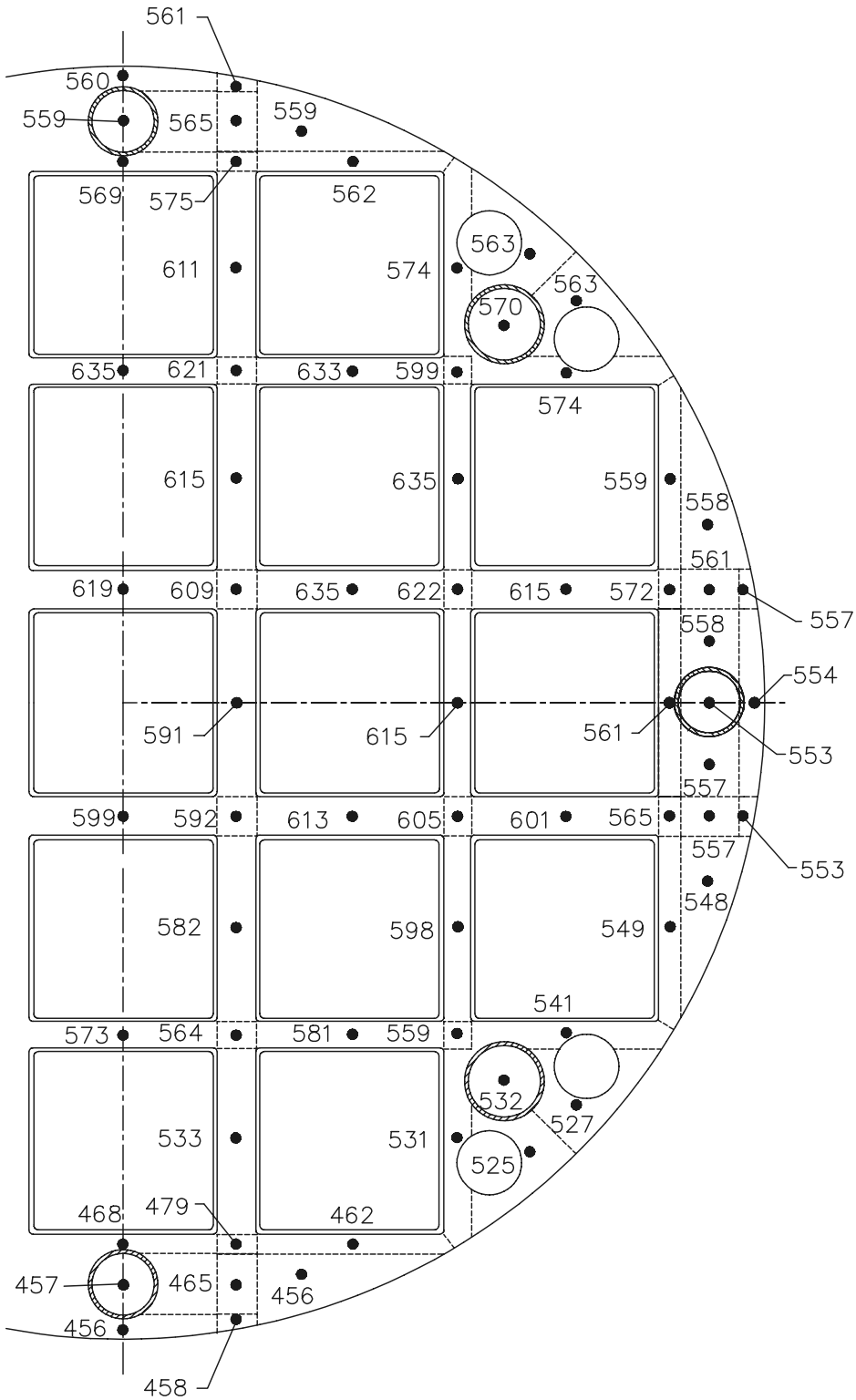

Figure 4.4-28 - Temperature Distribution in Hottest Carbon Steel Spacer Plate for Normal Hot Condition in Transfer Cask

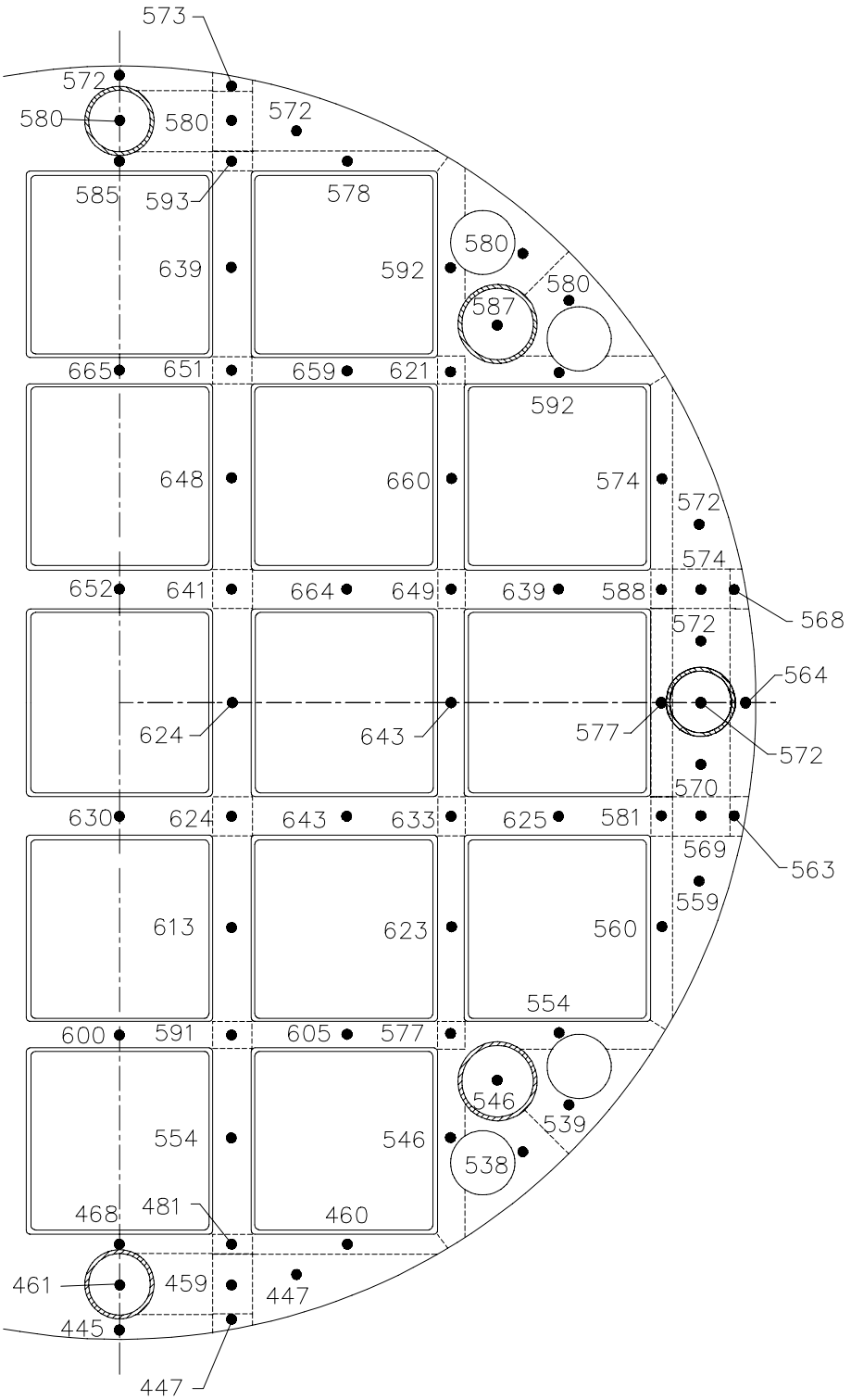

Figure 4.4-29 - Temperature Distribution in Hottest Stainless Steel Spacer Plate for Normal Hot Condition in Transfer Cask

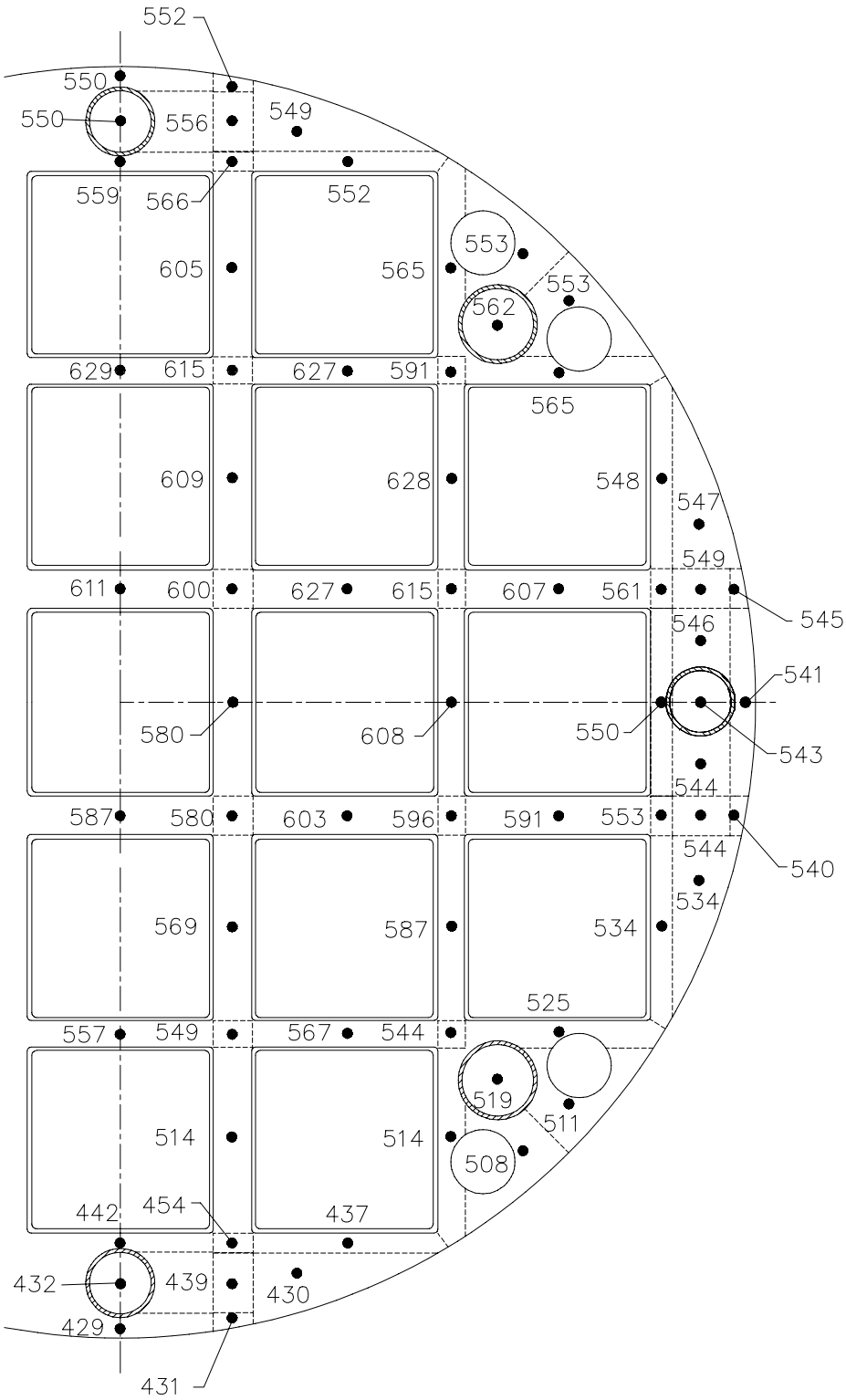

Figure 4.4-30 - Temperature Distribution in Hottest Carbon Steel Spacer Plate for Normal Cold Condition in Transfer Cask

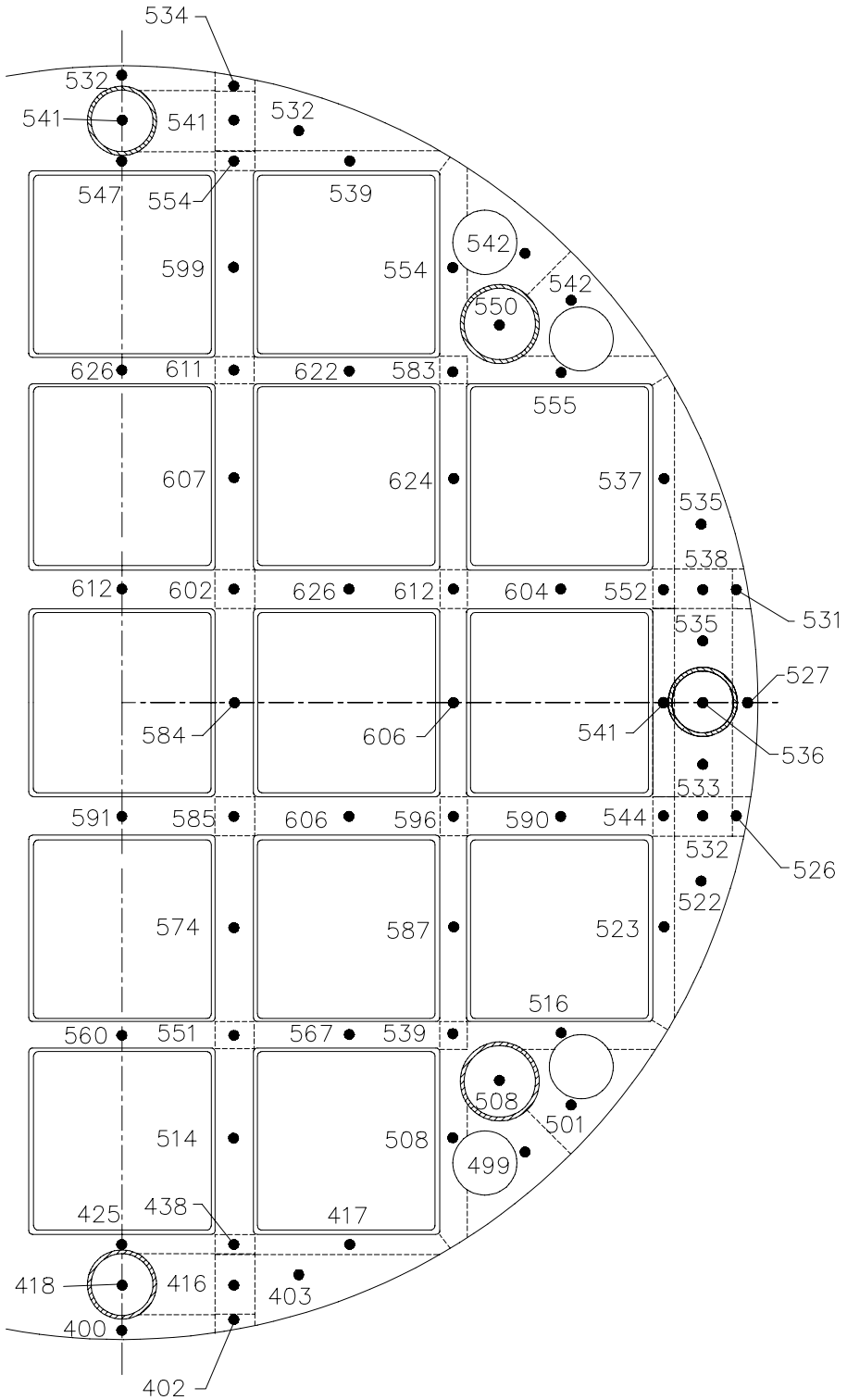

Figure 4.4-31 - Temperature Distribution in Hottest Stainless Steel Spacer Plate for Normal Cold Condition in Transfer Cask

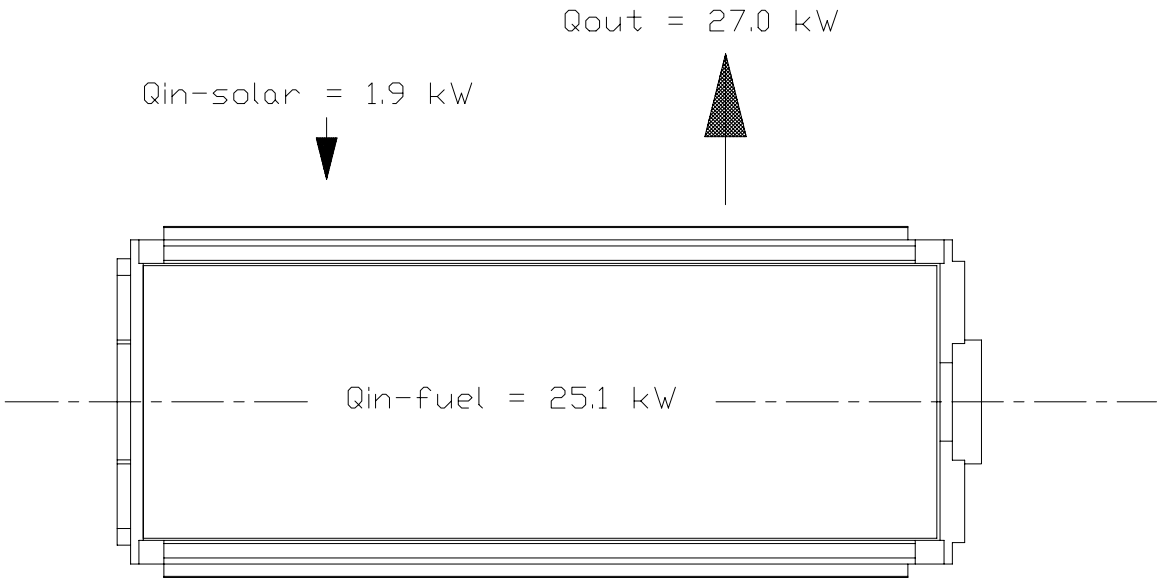

Figure 4.4-32 - W21 Canister Heat Balance within Transfer Cask at Normal Hot Conditions at Q_{max}

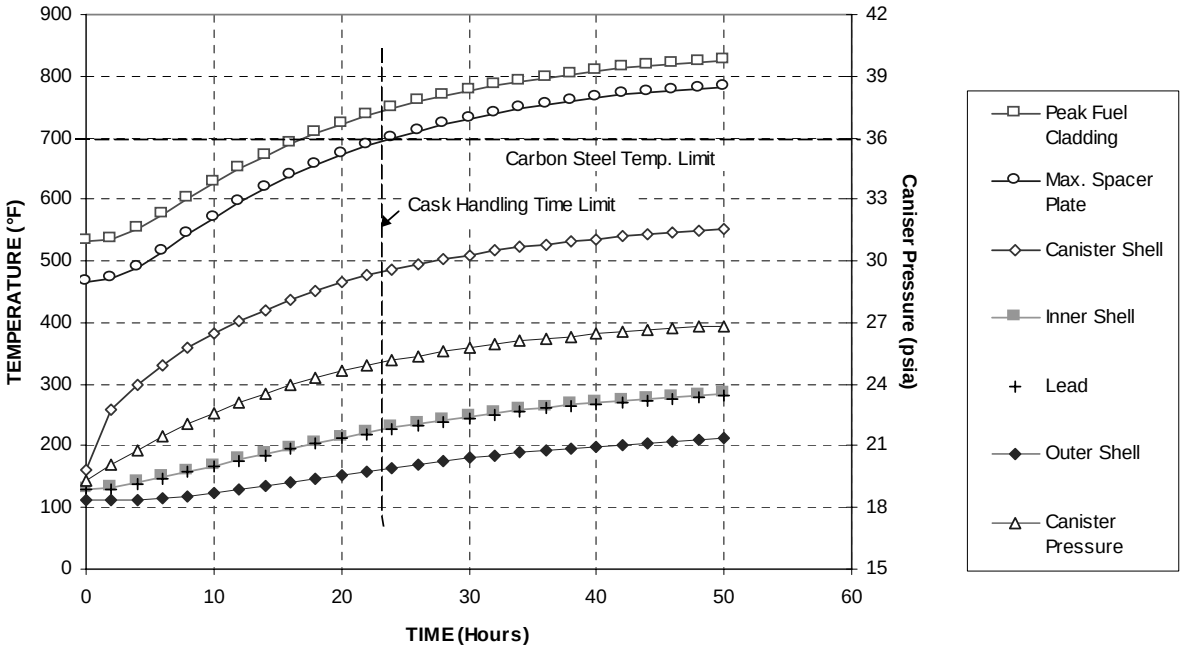

Figure 4.4-33 - Transfer Cask Handling (Case 10) Transient at Q_{max}

This page intentionally left blank.

4.5 Thermal Evaluation for Off-Normal Conditions of Storage

4.5.1 W21 Canister within Storage Cask

The storage cask off-normal conditions considered in this section include off-normal cold storage (case 8), off-normal hot storage (case 9), and canister horizontal transfer (case 13). The applicable storage cask operating conditions for these cases are summarized in Table 4.1-2.

4.5.1.1 Thermal Model

The thermal model used for evaluation of the W21 canister within the vertical storage cask under off-normal ambient conditions is identical to that described in Section 4.4.1.1. The thermal model for evaluation of the W21 canister within the storage cask during horizontal transfer differs slightly from the vertical model. The major modeling difference is internal convection, which is discussed in Section 4.7.1.

The thermal model used in the evaluation of the storage cask under normal flow conditions (all vents open) in the vertical orientation for off-normal ambient conditions is the same as that used for the normal conditions (see Section 4.4.1.1). Discussion of the all vents blocked case in the vertical orientation is included in the accident conditions discussion (Section 4.6). Storage cask horizontal modeling is discussed in Section 4.5.1 of the FuelSolutions™ Storage System FSAR.

4.5.1.2 Maximum Temperatures

Maximum storage cask system temperatures are presented below for off-normal ambient conditions and horizontal canister transfer conditions.

4.5.1.2.1 Off-Normal Ambient Conditions

As discussed in Section 4.4.1.2, the maximum thermal rating for the W21 canister within the storage cask is established based on the normal operating conditions. This same canister thermal rating is applied for the off-normal thermal analysis. For the thermal performance of the W21 canister under off-normal ambient conditions in the W150 Storage Cask, the off-normal cold storage (-40°F ambient, case 8) and off-normal hot storage (125°F ambient, case 9) conditions are evaluated. The specific operating conditions for off-normal ambient storage conditions are summarized in Table 4.1-2 for the applicable cases.

The W21 canister and storage cask off-normal system temperatures are presented in Table 4.5-1. All material temperatures are within their associated allowable values. Since off-normal thermal events do not have a concurrent structural drop condition, short-term allowable temperatures apply to all canister components. A maximum allowable temperature of 400°C applies for the fuel cladding. Representative temperatures of the W150 Storage Cask system temperature evaluations from Section 4.5.1 of the FuelSolutions™ Storage System FSAR are also presented in the table for comparison purposes. As expected, the results for the W21 canister are bounded by those for the storage cask evaluation.

4.5.1.2.2 Horizontal Canister Transfer Conditions

The W21 canister operating conditions for canister horizontal transfer are summarized in Table 4.1-2 for case 13. The limiting horizontal case, unloading, is considered. Canister unloading (case 13b) with the maximum W21 canister thermal rating is the most limiting horizontal condition since the thermal mass of the storage cask is already at elevated temperatures, thus reducing its ability to absorb the heat flux from the canister during the initial portion of the transient. For the unloading case, the W21 canister and storage cask initial temperatures for the horizontal transient analysis are taken as the steady-state temperatures at the W21 canister structural thermal rating (25.1 kW) for the normal storage condition (77°F ambient). These unloading initial conditions are conservative since the cask decay heat generation decreases with storage time, and unloading operations will most likely be performed following long-term storage.

The W21 canister off-normal transient temperatures in the horizontal storage cask are presented in Table 4.5-1 for the initial temperature (i.e., normal storage, case 5) and at the point after the start of the horizontal unloading transfer process when the maximum allowable carbon steel spacer plate temperature (700°F) is reached. This occurs at 14 hours for the W21 canister structural heat load rating of 25.1 kW. Note that, at this time value, all temperatures are below their applicable allowable material temperatures. For the horizontal canister unloading conditions (case 13b), the maximum carbon steel spacer plate allowable temperature is achieved after 14 hours at the canister thermal rating. This transient time period forms the basis for the *technical specification* limit contained in Section 12.3 of this FSAR.

Application of the *technical specifications* by the licensee is based on measured temperatures from a cask liner thermocouple installed at mid-height and at the liner/concrete interface of the storage cask, as described in Section 1.2.1.1 of the FuelSolutions™ Storage System FSAR. A second thermocouple is also installed at the mid-height and mid-thickness of the storage cask concrete. Figure 4.5-1 illustrates the W21 canister carbon steel spacer plate temperature as a function of time for the horizontal unloading transient. The corresponding storage cask liner and concrete thermocouple temperatures are also shown over the transient time period. From the figure, the liner thermocouple temperature limit of 203°F corresponds to a maximum carbon steel spacer plate allowable temperature of 700°F. From Table 4.5-1, the corresponding transfer cask thermocouple reading after a 60 hour transient during horizontal transfer operations is 317°F. The W21 canister materials are more thermally limiting than the storage cask during horizontal unloading, and the *technical specification* based on canister material allowables also provides protection for the cask materials.

If equipment mechanical difficulties occur during horizontal canister transfer operations that result in an extended period with the loaded storage cask in the horizontal orientation, mitigating actions are required prior to exceeding the W21 canister carbon steel spacer plate allowable material temperature, as correlated to the monitored liner thermocouple temperature. Mitigating actions include uprighting the cask and returning the canister to the transfer cask, as defined in the *technical specifications* in Section 12.3 of this FSAR.

4.5.1.3 Minimum Temperatures

The temperatures in the storage cask components under off-normal cold conditions are listed in Table 4.5-1. The temperatures shown are for the W21 canister at its structural thermal rating of 25.1 kW and, therefore, do not represent the lowest expected component temperatures.

The low temperature compatibility of the W21 canister components is also evaluated for the bounding load case of -40°F (-40°C) ambient temperature, zero decay heat load, and no insolation. The steady-state temperatures of the canister and storage cask system for this analytically trivial case are -40°F (-40°C). The component temperatures are within their minimum allowable temperatures in all cases.

4.5.1.4 Internal Pressures

For determination of the off-normal canister pressure, 10% rod failures are assumed. Additionally, the canister gas cavity temperature for off-normal hot storage conditions (125°F ambient, Section 4.1.4) is conservatively assumed.

$$P_{Off-Normal} = \frac{N_{Off-Normal} R T_{Off-Normal}}{V_{Canister}}$$

$$N_{Off-Normal} = N_{Canister} + 0.10 \cdot N_{Rods}$$

where:

N_{Rods} = total moles of fuel rod fill gas, fission gas and control component gas (as applicable) available for release.

$N_{Off\text{-}Normal}$ = Total moles of gas in the canister cavity, assuming 10% rod failures

$P_{Off\text{-}Normal}$ = Canister off-normal pressure

$V_{Canister}$ = Worst case canister cavity free volume (liters) (Table 4.4-6)

$T_{Off\text{-}Normal}$ = Canister gas temperature for off-normal hot storage (°K)

The canister pressure for off-normal cold storage conditions, with no rod failures, is also calculated to support structural analyses. The same methodology described above is used to calculate the off-normal pressure, using the canister backfill quantity in moles ($N_{Canister}$) and the canister gas temperature ($T_{Off\text{-}Normal}$) for off-normal cold storage conditions (-40°F ambient, Section 4.1.4).

W21 canister off-normal pressures are summarized in Table 4.5-3 by fuel assembly class and burnup range.

4.5.1.5 Maximum Thermal Stresses

W21 canister maximum thermal stresses during off-normal conditions are addressed in Section 3.6.1 of this FSAR. Calculation of these thermal stresses is based on the maximum canister structure heat load of 25.1 kW, and is conservative (bounding) for the actual canister heat rating of 22.0 kW.

4.5.1.6 Evaluation of Canister Performance for Off-Normal Conditions

Results of the steady-state and transient analyses demonstrate that the allowable material temperatures under off-normal conditions for the W21 canister within the storage cask are not exceeded for the enveloping canister decay heat dissipation at all sites within the contiguous United States. Therefore, the W21 canister is suitable for the dry storage of PWR fuel under off-normal conditions of storage when used with the FuelSolutions™ W150 Storage Cask and for the bounding thermal ratings, as summarized in Table 4.1-4. Over the long-term storage period, the SNF decay heat decreases, thus increasing the margins relative to the temperatures.

Table 4.5-1 - Maximum W21 Canister System Temperature at Q_{max} for Storage[1]

Component	Case 8 Off-Normal Cold Storage	Case 9 Off-Normal Hot Storage	Case 13b [4] Horizontal Unloading, Initial/Peak	Allowable Temperature[5]
Peak Fuel Rod Cladding	314.5°C	389.8°C	368.8°C / 395.5°C	400°C
Guide Tube	550°F	696°F	655°F / 710°F	800°F / 1000°F
Spacer Plates:				
Stainless Steel	539°F	687°F	646°F / 702°F	800°F / 1000°F
Carbon Steel	534°F	683°F	642°F / 700°F	700°F / 1000°F
Support Rod	325°F	497°F	449°F / 622°F	650°F / 1000°F
Helium Bulk	357°F	515°F	472°F / 594°F	N/A
Canister Shell	261°F	440°F	391°F / 558°F	800°F / 1000°F
Max. Concrete	6°F	211°F	158°F / 216°F	350°F
Cask Liner Thermocouple[2]	-9°F	190°F	133°F / 203°F	N/A
Reference Results from Tables 4.4-7 and 4.5-2 of the FuelSolutions™ Storage System FSAR				
Canister Shell[3]	*290°F*	*473°F*	*423°F / 662°F*	--
Max. Concrete[3]	*12°F*	*228°F*	*169°F / 348°F*	--
Cask Liner Thermocouple[2,3]	*0°F*	*210°F*	*150°F / 312°F*	--

Notes:

(1) Except as noted, temperatures in this table are based on a heat load of 25.1 kW.

(2) Estimated thermocouple reading for analyzed condition.

(3) Temperatures based on heat load of 28 kW.

(4) Peak temperatures taken from 14 hour point in the transient analysis.

(5) Short-term allowable steel temperatures from Table 4.3-1 apply for cases 8 and 9. Mitigating actions are required prior to exceeding long-term allowable temperatures for case 13b (see Section 12.3 of this FSAR). Canister allowable temperatures are from Table 4.3-1. Storage cask allowable temperatures are from Table 4.3-1 of the FuelSolutions™ Storage System FSAR.

Table 4.5-2 - W21 Canister Off-Normal Pressures[1]

Parameter	Case 8 Off-Normal Cold Storage	Case 9 Off-Normal Hot Storage	Case 13b Horizontal Unloading, Initial/Peak[3]
Helium Bulk	357°F	515°F	472°F / 684°F
Helium Pressure[2]	20.6 psia	24.6 psia	23.5 psia / 28.8 psia

Notes:

(1) Temperatures/pressures in this table are based on a heat load of 25.1 kW.

(2) Estimated canister pressure based on a design pressure of 24 psia at "normal hot storage" condition and ideal gas law. Pressurization due to fuel rod failure is not included.

(3) Peak temperature and pressure taken from 60-hour point in transient.

Table 4.5-3 - W21 Canister Off-Normal Pressures[1]

Fuel Class	45 GWd/MTU				60 GWd/MTU			
	Off-Normal Pressure (no rod failures) (psig)		Off-Normal Pressure (10% rod failures) (psig)		Off-Normal Pressure (no rod failures) (psig)		Off-Normal Pressure (10% rod failures) (psig)	
	w/o CC	w/ CC	w/o CC	w/ CC	w/o CC	w/ CC	w/o CC	w/ CC
Yankee Rowe	6.3	-	12.3	-	6.3	-	12.6	-
Fort Calhoun	6.2	6.2	13.3	13.7	6.2	6.1	13.8	14.2
Palisades	6.2	-	13.5	-	6.2	-	14.0	-
CE 14x14	6.2	6.2	13.7	14.0	6.1	6.1	14.2	14.5
St. Lucie 2	6.2	6.2	13.2	13.5	6.2	6.2	13.7	14.0
WE 14x14	6.1	6.1	14.4	14.9	6.1	6.0	14.9	15.4
WE 15x15	6.1	6.1	14.4	14.9	6.1	6.0	14.9	15.5
WE 17x17	6.1	6.0	14.8	15.3	6.0	6.0	15.4	15.9
B&W 15x15	6.1	6.1	14.3	14.8	6.1	6.0	14.8	15.4
B&W 17x17	6.2	6.1	14.0	14.5	6.1	6.1	14.5	15.1
CE 16x16	6.2	-	13.2	-	6.2	-	13.7	-
CE 16x 16 Sys80	6.2	-	13.2	-	6.2	-	13.7	-

Notes:

(1) Pressures are presented for the limiting fuel assembly type within each class, which results in the highest canister accident pressure.

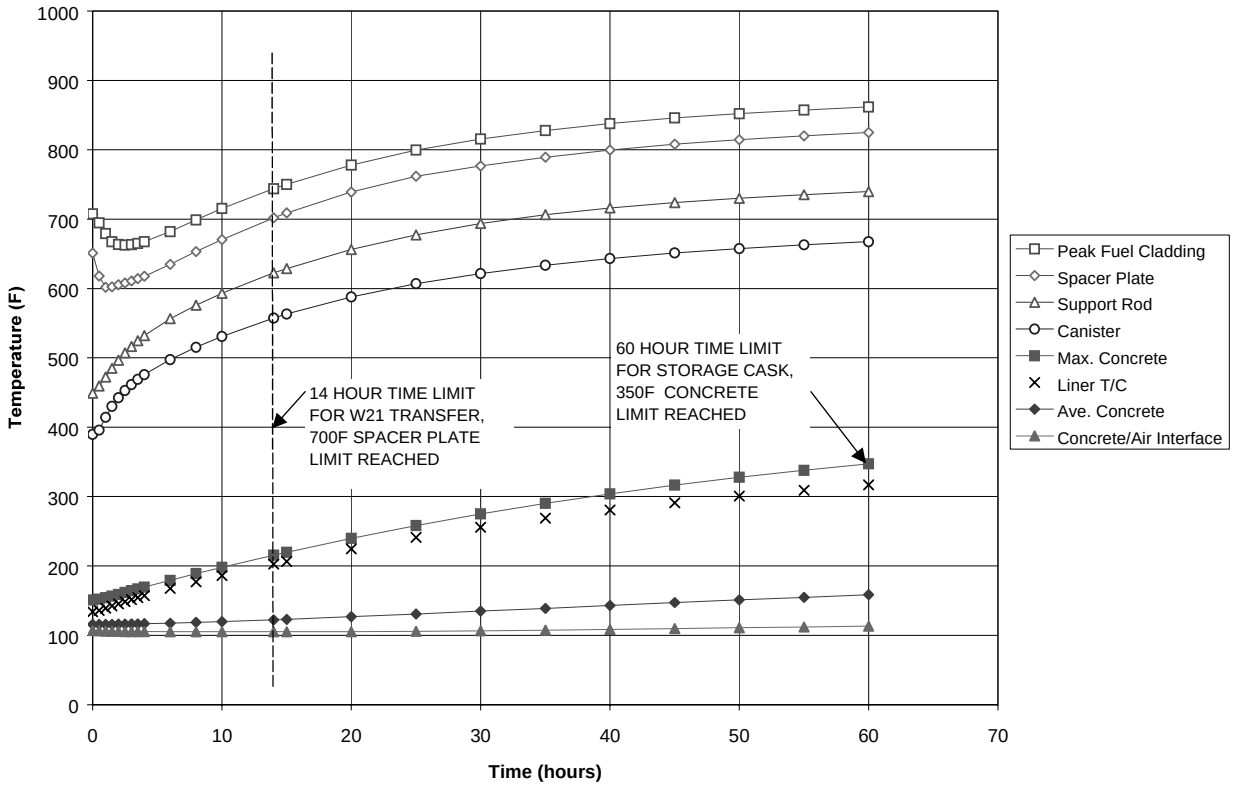

Figure 4.5-1 - W21 Canister/Storage Cask Temperatures During Horizontal Unload Transient (25.1 kW)

4.5.2 W21 Canister within Transfer Cask

4.5.2.1 Thermal Model

The W21 canister thermal model used for evaluation of the off-normal conditions within the transfer cask is the same as that used for the normal conditions (see Section 4.4.2.1).

4.5.2.2 Maximum Temperatures

Table 4.5-4 presents the W21 canister system temperatures for the off-normal transfer cases for vacuum drying (case 6), off-normal cold (case 16), and off-normal hot (case 17) conditions of transfer for the "max. thermal" heat profile. The evaluations are made for the maximum thermal rating for the W21 canister. The system configurations associated with these off-normal cases are summarized in Table 4.1-3.

All canister component temperatures are within their associated allowable values, with the exception of the peak fuel cladding temperature at the steady-state vacuum drying condition. The results for vacuum drying (case 6) with the "max. thermal gradient" profile ($LHGR_{max}$) are encompassed by those presented in Table 4.5-4 for the "max. thermal" profile (Q_{max}). Since off-normal thermal events do not have a concurrent structural drop condition, short-term allowable temperatures apply to all canister components and fuel cladding. Representative temperatures from the W100 Transfer Cask system temperature evaluations (Section 4.5.2 of the FuelSolutions™ Storage System FSAR) are also presented in the table for comparison purposes. As expected, the results for the W21 canister are bounded by those for the transfer cask evaluation.

The peak fuel cladding temperature is shown to be below its maximum allowable short-term temperature of 400°C during off-normal hot and cold transfer (steady-state). However, for vacuum drying, the peak fuel cladding could reach its short-term allowable temperature (400°C) if near vacuum conditions are maintained for approximately 12 hours. To avoid this, application of the *technical specification* by the licensee will be used to manage the vacuum drying process. Figure 4.5-2 illustrates the predicted thermal response of this managed vacuum drying process for the W21 canister with a heat load of 25.1 kW.

As seen from the figure, the typical canister loading cycle is divided into the multiple phases that a canister will typically undergo prior to placement in the storage cask. Phases 1 and 2 cover removal from the pool, decon, and welding of the canister lids; Phase 3 is the canister drain down; Phase 4 is the vacuum drying of the canister; Phases 5 and 6 involve canister inspections and possible re-evacuation of the canister; Phase 7 involves outer closure plate welding, PT and NDE evaluations, rigging, etc.; Phase 8 is vertical transfer handling operations; and Phase 9 is interim storage of the canister in the storage cask.

The Figure 4.5-2 transient demonstrates that if the vacuum drying time is limited to an initial maximum period of 12 hours, the short-term fuel cladding limit of 400°C will not be exceeded. If additional vacuum drying time is required, the controlled vacuum drying process will require at least 4 hours of cooling under helium gas backfill prior to initiating another 8-hour period of vacuum drying. This cycle of cooling under helium backfill and re-evacuation may be repeated as often as necessary to achieve the desired level of dryness within the canister. This approach

will prevent annealing and hydride readsorption and reorientation that could occur in the Zircaloy-2 or Zircaloy-4 cladding at temperatures greater than 400°C (752°F), and will assure that the total cladding creep during fuel loading and storage operations is less than 1%.

The remainder of the Figure 4.5-2 transient demonstrates that the short-term fuel cladding limit of 400°C will not be exceeded under the other canister handling operations and time frames that proceed placement in interim storage.

4.5.2.3 Minimum Temperatures

The temperatures in the transfer cask components under off-normal cold conditions are listed in Table 4.5-4. The temperatures shown are for the W21 canister at its maximum thermal rating of 25.1 kW for the transfer cask and, therefore, do not represent the lowest expected component temperatures.

The low temperature compatibility of the W21 canister components is also evaluated for the bounding load case of -40°F (-40°C) ambient temperature, zero decay heat load, and no insolation. The steady-state temperatures of the canister and transfer cask system for this analytically trivial case are -40°F (-40°C). The component temperatures are within their minimum allowable temperatures in all cases.

Transient analysis is presented in Section 4.5.2.3 of the FuelSolutions™ Storage System FSAR to illustrate the time frame available when operating in freezing weather. An associated *technical specification* has been established, as presented in Section 12.3 of the FuelSolutions™ Storage System FSAR, based on a bounding transient analysis, which assumes no decay heat load.

4.5.2.4 Internal Pressures

Table 4.5-5 presents the W21 canister pressures for off-normal transfer cases. These canister internal pressures consider only the canister helium backfill gas and helium bulk temperature. No rod failures are assumed.

Since the canister thermal rating is lower than the transfer cask thermal rating, the liquid neutron shield internal pressure is bounded by that in the FuelSolutions™ Storage System FSAR.

4.5.2.5 Maximum Thermal Stresses

W21 canister maximum thermal stresses within the transfer cask during off-normal conditions are addressed in Section 3.6.1 of this FSAR. Calculation of these thermal stresses is based on the canister structure heat load of 25.1 kW, and is conservative (bounding) for the actual canister heat rating of 22.0 kW.

4.5.2.6 Evaluation of Canister Performance for Off-Normal Conditions

The results of the steady-state analyses demonstrate that the W21 canister and transfer cask allowable material temperatures under off-normal conditions are met for the maximum canister thermal rating, as presented in Table 4.1-4. Therefore, the W21 canister is suitable for the transfer of PWR fuel within the FuelSolutions™ W100 Transfer Cask. The W21 canister is qualified for 22.0 kW.

The canister pressurization for off-normal conditions of transfer is within the design allowables for the canister.

Table 4.5-4 - Maximum W21 Canister System Temperatures for Normal/Off-Normal Transfer at Q_{max} (1)

Component	Case 6 Vacuum Drying(2)	Case 16 Off-Normal Cold Transfer	Case 17 Off-Normal Hot Transfer	Material Allowables(3)
Peak Fuel Rod Cladding	472.6°C	355.5°C	387.2°C	400°C
Guide Tube	813°F	626°F	685°F	1000°F
Spacer Plates:				
Stainless Steel	796°F	610°F	675°F	1000°F
Carbon Steel	798°F	614°F	679°F	1000°F
Support Rod	391°F	548°F	609°F	1000°F
Helium Bulk Temp.	N/A	524°F	594°F	N/A
Canister Shell	168°F	475°F	539°F	1000°F
Cask Inner Liner	146°F	242°F	337°F	1000°F
Cask Lead Shield	145°F	238°F	334°F	620°F
Cask Structural Shell	134°F	141°F	260°F	1000°F
Liquid Neutron Shield	109°F	108°F	239°F	293°F(4)
Neutron Shield Pressure	14.7 psia	14.7 psia	24.4 psia	60 psia(4)
Cask Thermocouple(5)	123°F	138°F	260°F	N/A
Reference Results from Table 4.5-6 of the FuelSolutions™ Storage System FSAR				
Cask Lead(6)	*N/A*	*258°F(3)*	*360°F*	--
Cask Thermocouple(5,6)	*N/A*	*151°F(3)*	*274°F*	--

Notes:

(1) Temperatures in this table are based on a heat load of 25.1 kW.

(2) Steady-state values shown for information only. Vacuum drying process will limit the fuel clad temperature to its maximum short-term value of 400°C. A heat load of 17.5 kW or less will result in a maximum steady-state cladding temperature of 400°C or less. See discussion in Section 4.5.2.2.

(3) Short-term allowable temperatures apply for the canister (Table 4.3-1). Transfer cask material allowable temperatures are from Table 4.3-2 of the FuelSolutions™ Storage System FSAR.

(4) Neutron shield allowable pressure and allowable temperature are taken from Table 2.0-1 of the FuelSolutions™ Storage System FSAR.

(5) Estimated thermocouple reading for analyzed condition.

(6) Temperatures based on heat load of 28 kW.

Table 4.5-5 - W21 Canister Pressures for Off-Normal Transfer at Q_{max} (1)

Parameter	Case 6 Vacuum Drying	Case 16 Off-Normal Cold Transfer	Case 17 Off-Normal Hot Transfer
Helium Bulk	N/A	524°F	594°F
Helium Pressure(2)	0 psia	24.8 psia	26.5 psia

Notes:

(1) Temperatures/pressures in this table are based on a heat load of 25.1 kW.

(2) Estimated canister pressure based on a design pressure of 24 psia at "normal hot storage" condition and ideal gas law. Pressurization due to fuel rod failure is not included.

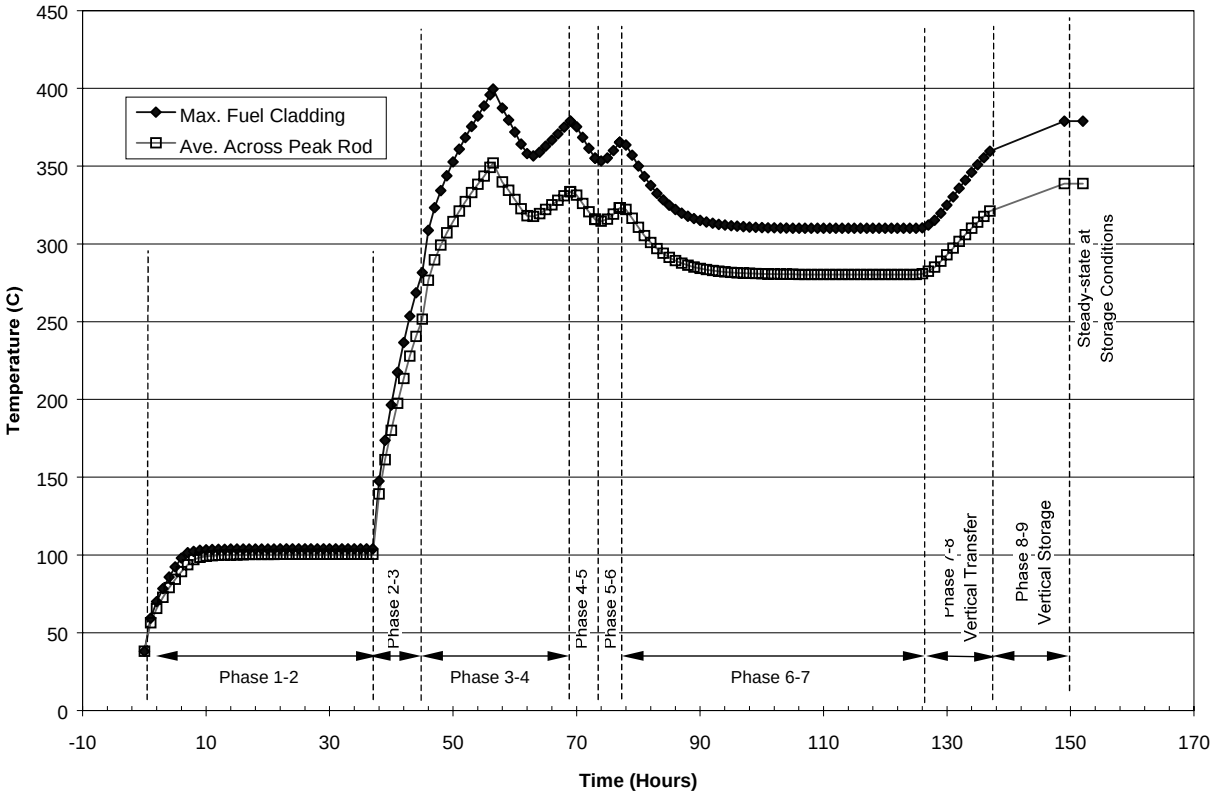

Figure 4.5-2 - W21 Canister Loading Cycle Temperature Histogram For Vertical Transfer

4.6 Thermal Evaluation for Accident Conditions of Storage

4.6.1 W21 Canister within Storage Cask

The two storage cask postulated accident conditions considered are all vents blocked (case 11) and fire (case 15). The applicable storage cask operating conditions for these cases are summarized in Table 4.1-2. All accident storage condition thermal analyses are conservatively based on a 25.1 kW canister heat load, the maximum heat load that can be accommodated by the W21 canister structure. The analyses are bounding (conservative) for the actual W21 canister heat load rating of 22.0 kW (which is based on the maximum fuel cladding temperature allowable).

4.6.1.1 Thermal Model

4.6.1.1.1 All Vents Blocked

The W21 canister thermal model used in the evaluation of the storage cask for the all vents blocked accident condition is identical to that used for the normal conditions (see Section 4.4.1.1). The storage cask thermal model differences for the all vents blocked condition are fully described in Section 4.6.1 of the FuelSolutions™ Storage System FSAR. Briefly, the storage cask model assumes that at time t = 0, the inlet and outlet vents become fully blocked. An internal flow loop is set up by this blockage, wherein the air flow circulates between the canister, the thermal shield, and the steel liner of the storage cask. The strength of this internal flow loop is computed within the storage cask thermal model as a function of the density differences between the inner and outer air columns. All other aspects of the storage cask model remain the same as that used to compute the normal conditions of storage discussed in Section 4.4.1 of this FSAR.

4.6.1.1.2 Storage Cask Fire

As presented in Section 4.6.1 of the FuelSolutions™ Storage System FSAR, the loaded storage cask is analyzed for a postulated fire accident during long-term storage. The transient response of the storage cask under postulated fire accident conditions is simulated using the lumped parameter heat transfer code SINDA with thermal modeling similar to that described for normal conditions. Two postulated fire events are simulated: 1) a 5-minute engulfing fire, and 2) a 5-minute fire within the storage cask inlet vents. The thermal models for the two postulated storage cask fire events are nearly identical to the normal model with minor modifications for the ambient conditions and natural convection.

Both fire transient analyses assume an initial steady-state temperature distribution for normal hot storage conditions. Immediately following the 5-minute fire event, ambient conditions are returned to normal hot storage conditions for evaluation of the post-event transient response.

Engulfing Fire

The normal vertical storage cask model, presented in Section 4.4.1.1 of the FuelSolutions™ Storage System FSAR, simulates the natural convection flow upward through the annulus induced the buoyancy-driven forces resulting from heavier (cooler) ambient air. During a fire event, the ambient (flame) temperature is much higher than that of the canister surface, the heat

shield, and the cask liner. As a result, the gas in the storage cask annulus is heavier than the ambient gas, creating reversed natural circulation flow. Hot combustion gas flows into the annulus gap from the top vents, flow downward along the annulus gap, and exit the cask through the bottom channels. While the gas flows downward along the annulus gaps, heat is transferred to the canister shell and the cask liner. Minor modifications to the normal air flow model are performed to account for the reverse convection. The air flow in the storage cask annulus reverses direction back to the normal vertical storage conditions immediately after the fire ceases.

In order to conservatively bound the canister shell temperature during the transient, no heat transfer is assumed between the shell and the canister internals. The normal vertical storage cask model used for transient analysis assumes that the entire thermal mass of the canister is concentrated at the canister shell. In order to allow conservative determination of the canister shell temperature response during the fire event, the canister shell is modeled with only its thermal mass, not the total canister thermal mass.

Consistent with NUREG-1536,[12] the flame and surface emissivities specified in 10CFR71.73(c)(4) are assumed to bound any credible storage cask fire because of the high heat and the proximity of the flames. The storage cask is conservatively assumed to become engulfed in a hydrocarbon fuel/air fire of sufficient extent, and in sufficiently quiescent ambient conditions, to provide an average emissivity coefficient of 0.9, with an average flame temperature of 1475°F for a period of 5 minutes. The flame source is conservatively assumed to extend 10 feet beyond any external surface of the cask.

The mechanisms and models for coupling the fire energy to the cask surface include forced convection in relation to the flame velocity as well as thermal radiation. In order to conservatively maximize radiation and convection heat transfer, the flame is assumed to surround the cask with a flame temperature of 1475°F and a maximum velocity of 15 m/s (49.2 ft/sec), which gives the highest convection coefficient. A convection coefficient value of 3.8 Btu/hr-ft^2-°F is conservatively utilized for all exterior surfaces of the storage cask.

Inlet Vent Fire

There is no significant modeling change required to simulate the postulated 5-minute inlet vent fire. The basic flow pattern is the same as that for the normal vertical operation. However, it is assumed that the liquid fuel burns within the cask inlet vents and the base section bottom hole, thus the temperatures for the air nodes of the base sub-model are set to the fire temperature 1475°F (801.7°C). The hot combustion gases rise along the vertical annulus gaps, giving up heat to the canister shell, the heat shield, and the cask liner along the way. The exhaust gas exits the cask from the outlet vents.

Similar to the 5-minute engulfing fire, the canister shell is modeled with only its thermal mass, not the total canister thermal mass in order to conservatively bound the canister shell temperature during the transient.

4.6.1.2 Maximum Temperatures

Transient analyses are performed for both the all vents blocked and fire accident conditions. For the fire accident, there is no corresponding *technical specification* which correlates surface concrete temperature to the thermocouple reading. This is due to the fact that the cask outer

surface concrete temperatures exceed 350°F nearly instantaneously during the fire accident, and the storage cask thermocouples cannot be expected to be functional following the fire accident. However, the operating procedures presented in Section 8.1.10 of the FuelSolutions™ Storage System FSAR will limit the quantity of combustible fuel at the ISFSI.

4.6.1.2.1 All Vents Blocked

Figure 4.6-1 presents the transient temperature plot for storage design basis case 11 (i.e., all vents blocked). The transient starts at the steady-state conditions for normal conditions of storage (i.e., case 5). At time 0, the inlet and outlet vents are assumed to be fully blocked and to remain that way for the duration of the 80-hour transient. The results show that the short-term allowable temperature limit of 350°F for concrete is reached at approximately 60 hours into the transient, at which time the predicted cask liner thermocouple temperature is 339°F. Table 4.6-1 presents the maximum component temperatures for the canister and cask prior to the start of the all vents blocked transient and at the point where the maximum allowable concrete temperature is reached (i.e., 60 hours). The results from the storage cask only analysis are also provided for comparison purposes.

The rate of temperature rise in the canister and cask components during the all vents blocked transient is primarily a function of the thermal mass of the component since heat loss to the ambient is greatly reduced for this condition. Like the storage cask only analysis, the results for the W21 canister in the storage cask demonstrate that the maximum cask concrete temperature is the controlling component for the analysis. The trend in the data indicates that steady-state conditions could be reached without exceeding the maximum fuel cladding temperatures or any canister component allowable temperature. Further, the results of this analysis show that the storage cask temperatures remain below their maximum allowable temperatures well past the 52-hour time period determined under the design basis storage cask thermal evaluation for a comparable heat load of 25.0 kW. The primary reasons for the difference in the results between the two analyses is that the W21 canister analysis provides a more accurate modeling of the thermal mass and heat distribution within the canister than is possible with the storage cask only model.

4.6.1.2.2 Fire Accident

Figure 4.6-2 and Figure 4.6-3 present the temperature response for the storage cask and generic canister to a 5-minute engulfing fire event and 5-minute inlet fire event, respectively. As seen from the figures, the canister shell shows a steady increase in temperature during the fire durations due to the hot air which is induced through the canister/cask annulus. The peak canister shell temperature prior to the fire event is 447°F (Table 4.4-7 of the FuelSolutions™ Storage System FSAR), and the peak canister temperatures for the engulfing and inlet vent fires are 475°F and 478°F, respectively (Table 4.6-2 of the FuelSolutions™ Storage System FSAR). This corresponds to a maximum rise of 31°F in the canister shell during the 5-minute fire transient. Due to the large thermal capacitance of the canister, the temperature rise within the canister during the 5-minute fire is much lower than the shell. At the end of the fire event, ambient air is cooler than the air within the storage cask annulus, resulting in resumption of normal vertical ventilation flow. Since the canister shell temperature begins to drop after the fire, the resultant maximum possible rise in canister internals and peak fuel cladding is limited to

31°F (17°C). By comparison with system temperatures at the beginning of the fire transient (case 7, Section 4.4.1.3), peak fuel cladding is well under the short-term allowable temperature of 570°C, and all steel materials are well under the 1000°F short-term allowable temperature.

4.6.1.3 Minimum Temperatures

There are no accident conditions applicable to minimum allowable material temperatures.

4.6.1.4 Internal Pressures

For determination of the accident canister pressure, 100% rod failures are postulated while conservatively assuming the W21 canister average gas temperature for off-normal hot storage conditions (125°F ambient, Section 4.1.4). Although the W21 canister average gas temperature under the postulated all vents blocked and fire accident conditions may exceed the corresponding gas temperature for off-normal hot storage conditions, failure of 100% of the rods does not need to be postulated concurrently with the other postulated accident conditions. Since the short-term fuel cladding allowable temperature presented in Section 4.3.2.4 (570°C) is not exceeded during W21 canister design basis accident conditions, gross cladding failures do not occur.

$$P_{Accident} = \frac{N_{Accident} R T_{Off-Normal}}{V_{Canister}}$$

$$N_{Accident} = N_{Canister} + N_{Rods}$$

where:

N_{Rods} = total moles of fuel rod fill gas, fission gas and control component gas (as applicable) available for release.

$N_{Accident}$ = Total moles of gas in the canister cavity, assuming 100% rod failures

$P_{Accident}$ = Canister pressure for off-normal hot storage conditions (125°F ambient)

$V_{Canister}$ = Worst-case canister cavity free volume (liters), from Table 4.4-6.

$T_{Off-Normal}$ = Canister gas temperature for off-normal hot storage (°K)

W21 canister accident pressures are presented in Table 4.6-2 by fuel assembly class and burnup range. The calculated peak accident pressure (68.7 psig) satisfies and forms the basis for the W21 canister accident design pressure of 69 psig.

Even if off-normal rod failures (10%) are conservatively assumed under the postulated all vents blocked conditions (698°F bulk helium temperature), the resultant canister internal pressure is still bounded by the assumed condition of 100% rod failures at the off-normal hot storage temperature (493°F bulk helium temperature). This can be illustrated by comparing the relative quantities of rod gas and canister backfill gas presented in Table 4.4-5 and Table 4.4-6 for the limiting PWR fuel assembly class. Assuming 100% rod failures, the maximum total moles of rod gas (fill gas + 60 GWd/MTU fission gas + control component gas) shown in Table 4.4-5 for the limiting PWR fuel (WE 17x17 with control components [CC]) are 523.1 moles (228.6 + 230.5 + 64.0). The total moles of canister fill gas shown in Table 4.4-6 for the limiting PWR fuel (WE 17x17, 60 GWd/MTU w/ CC) are 220 moles, for a total canister content of

743.1 moles. Assuming 10% rod failures, the maximum total moles of gas in the canister would be 272.3 moles (52.3 + 220). The reduction in the number of moles would result in a proportional 37% reduction in canister pressure (272.3 moles / 743.1 moles), while the increased absolute accident temperature would result in only a 21.5% proportional pressure increase (1158°R / 953°R). The net effect is a pressure which is 45% of the accident pressure with 100% rod failures under off-normal hot storage conditions.

4.6.1.5 Maximum Thermal Stresses

W21 canister thermal stresses resulting from accident conditions are addressed in Sections 3.7.1 and 3.7.6 of this FSAR.

4.6.1.6 Evaluation of Canister Performance for Accident Conditions

4.6.1.6.1 All Vents Blocked

A transient analysis of the all vents blocked case demonstrates that the short-term allowable material temperatures for the W21 canister and the storage cask are not exceeded for the enveloping canister thermal rating of 25.1 kW for any site within the contiguous United States, provided that the all vents blocked conditions do not exist for longer than a 60-hour period. The results of the design-basis all vents blocked thermal analysis presented in Section 4.6.1 of the FuelSolutions™ Storage System FSAR, upon which the required storage cask surveillance periods are based, show that the short-term allowable temperature is reached after 52 hours for a comparable heat load of 25.0 kW. The differences in the analysis results are due to additional conservatisms included in the thermal model used for the storage cask heat load qualification, as discussed in Section 4.6.1.2.1. Thus, the limiting surveillance intervals required by the *technical specification* contained in Section 12.3 of this FSAR provide adequate protection of the fuel cladding and canister components during a credible blocked vent event for the storage cask. The operational *technical specification* contained in Section 12.3 of the FuelSolutions™ Storage System FSAR provides for periodic monitoring and corrective actions to mitigate any vent blockage conditions.

4.6.1.6.2 Fire Accident

A transient analysis of the fire accident for the W21 canister in the storage cask demonstrates that the W21 canister short-term allowable material temperatures are not exceeded for a fire accident, consistent with the requirements of 10CFR71.73(c)(4). Therefore, the W21 canister and storage cask are suitable for the dry storage of fuel with thermal ratings that are bounded by the W21 canister thermal rating summarized in Table 4.1-4.

Table 4.6-1 - W21 Canister System Temperature for All Vents Blocked[1]

Component	Case 11 All Vents Blocked, Initial/Peak[2]	Material Allowable[5]
Peak Fuel Rod Cladding	368.8°C / 485.8°C	570°C
Guide Tube	655°F / 878°F	1000°F
Spacer Plates:		
Stainless Steel	646°F / 870°F	1000°F
Carbon Steel	642°F / 868°F	1000°F
Support Rod	449°F / 701°F	1000°F
Helium Bulk	472°F / 698°F	N/A
Canister Shell	391°F / 655°F	1000°F
Max. Concrete	158°F / 350°F	350°F
Cask Liner Thermocouple[3]	133°F / 339°F	N/A
Reference Results from Table 4.6-3 of the FuelSolutions™ Storage System FSAR		
Canister Shell[4]	*399°F / 622°F*	--
Max. Concrete[4]	*161°F / 345°F*	--
Cask Liner Thermocouple[3,4]	*144°F / 332°F*	--

Notes:

(1) Except as noted, temperatures in this table are based on a heat load of 25.1 kW.

(2) Peak temperature taken from the 60-hour point in the transient analysis.

(3) Estimated thermocouple reading for analyzed condition.

(4) Temperatures based on heat load of 25.0 kW. Peak temperatures taken at 50 hours into the transient. The concrete short-term allowable temperature limit of 350°F is reached at 52 hours into the transient.

(5) Canister allowable temperatures are from Table 4.3-1. Storage cask material allowable temperatures are from Table 4.3-1 of the FuelSolutions™ Storage System FSAR.

Table 4.6-2 - W21 Canister Accident Pressures[1]

Fuel Class	45 GWd/MTU (psig)		60 GWd/MTU (psig)	
	w/o CC	w/ CC	w/o CC	w/ CC
Yankee Rowe	29.3	-	33.1	-
Fort Calhoun	40.8	45.2	46.0	50.6
Palisades	42.9	-	48.7	-
CE 14x14	44.5	48.0	50.0	53.3
St. Lucie 2	39.5	43.1	44.6	48.0
WE 14x14	53.1	58.1	58.6	63.6
WE 15x15	52.1	58.5	58.5	64.9
WE 17x17	57.4	62.3	64.0	68.7
B&W 15x15	51.0	56.7	57.5	63.1
B&W 17x17	47.7	53.6	54.0	59.8
CE 16x16	39.9	-	45.0	-
CE 16x16 Sys80	39.5	-	44.7	-

Notes:

(1) Pressures are presented for the limiting fuel assembly type within each class, which results in the highest canister accident pressure. Pressures based on 100% postulated rod failures.

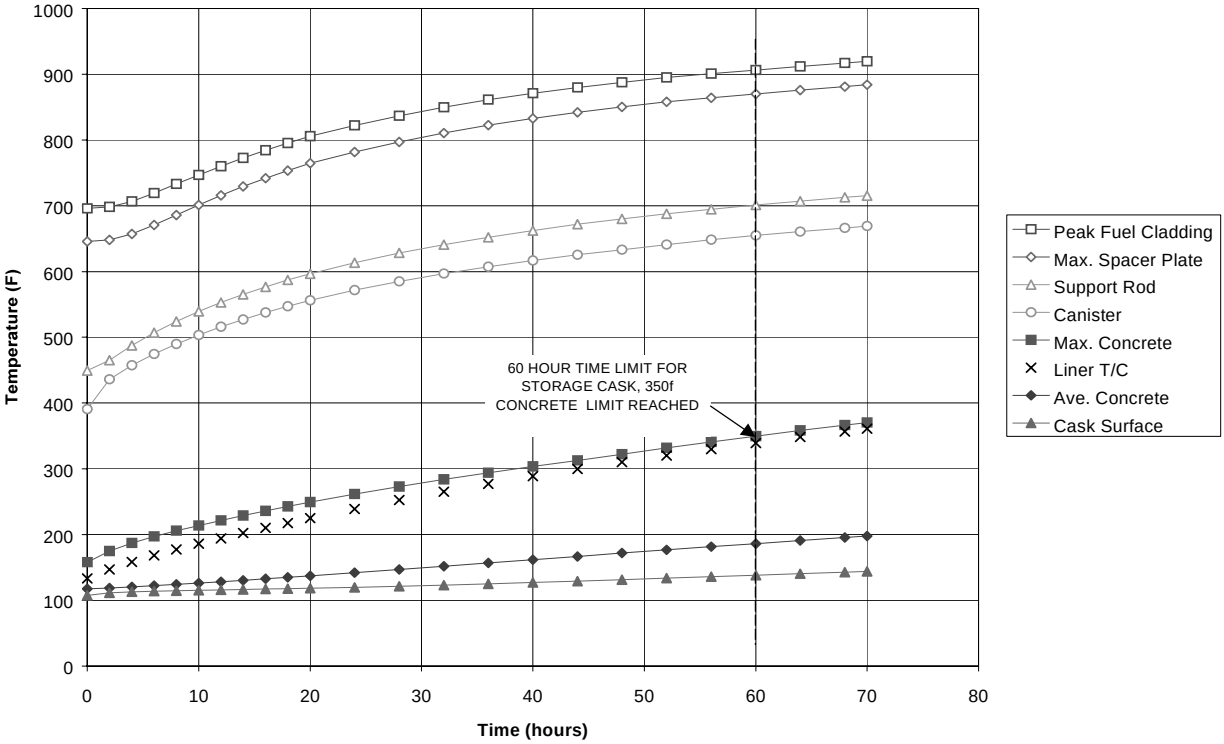

Figure 4.6-1 - Storage Cask All Vents Blocked Transient with W21 Canister

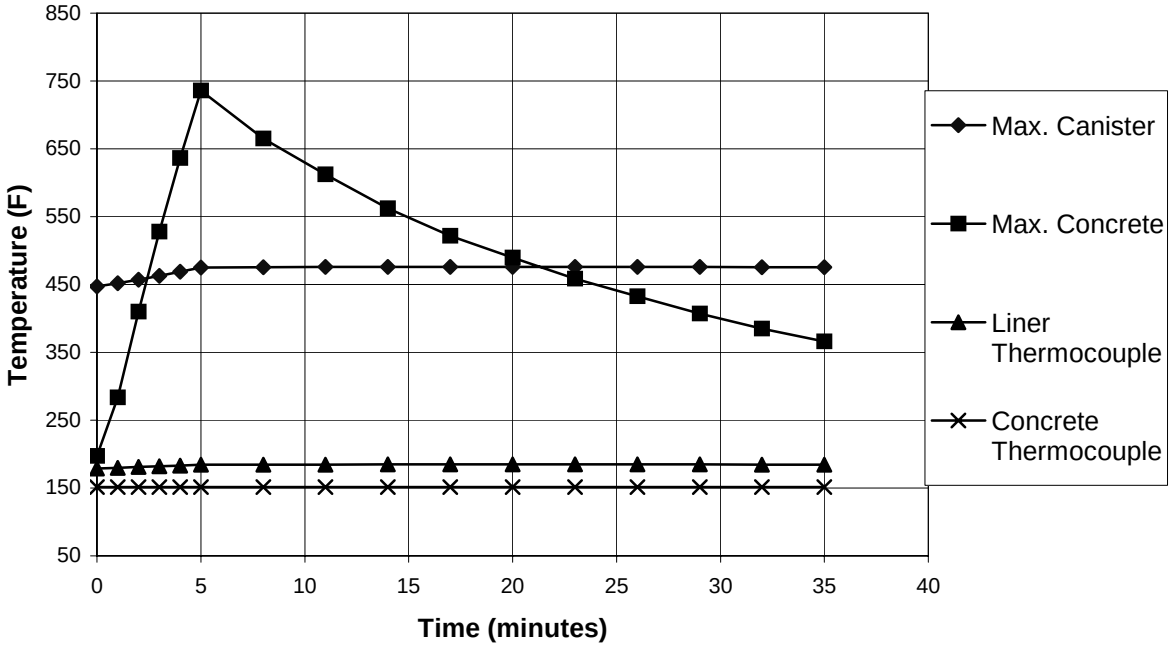

Figure 4.6-2 - Storage Cask and Canister Response to 5-Minute Engulfing Fire

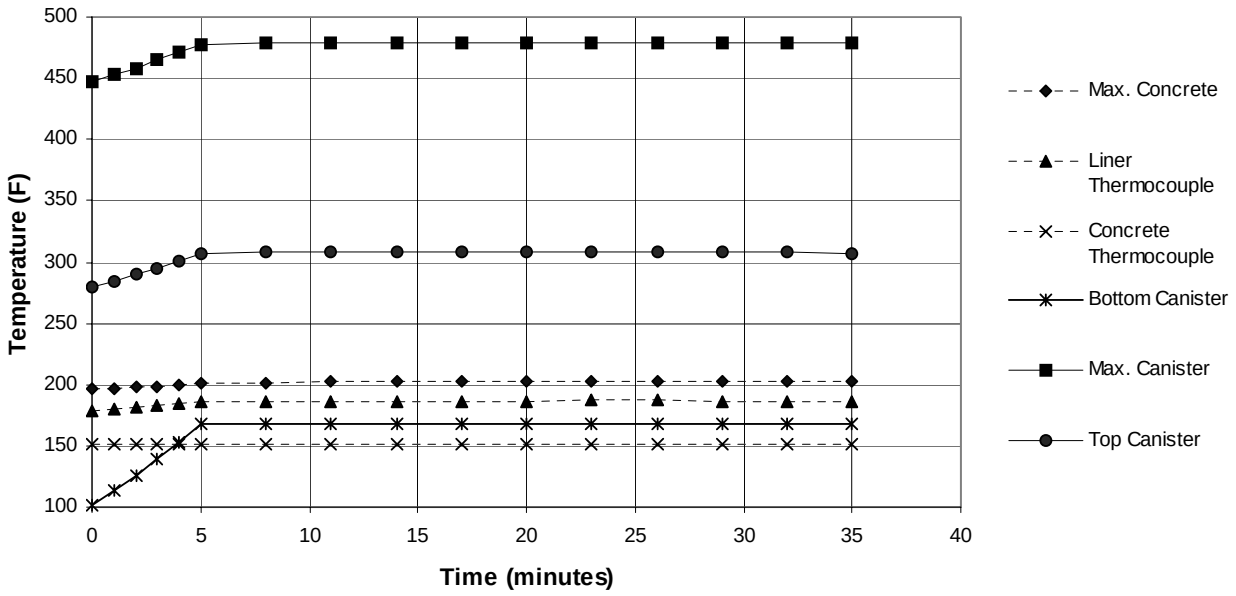

Figure 4.6-3 - Storage Cask and Canister Response to 5-Minute Inlet Vent Fire

4.6.2 W21 Canister within Transfer Cask

The two transfer cask postulated accident conditions considered are a loss of neutron shield (case 18) and a fire accident (case 20). The applicable transfer cask operating conditions for these cases are summarized in Table 4.1-3. All accident storage condition thermal analyses are conservatively based on a 25.1 kW canister heat load, the maximum heat load that can be accommodated by the W21 canister structure. The analyses are bounding (conservative) for the actual W21 canister heat load rating of 22.0 kW (which is based on the maximum fuel cladding temperature allowable).

4.6.2.1 Thermal Model

4.6.2.1.1 Drained Liquid Neutron Shield

The combined W21 canister and transfer cask thermal model used to analyze the drained liquid neutron shield condition is the same as that described in Section 4.4.2.1, with the exception that the conduction and convection across a water-filled annulus is replaced with conductors representing convection and radiation across an air-filled annulus. All other aspects of the thermal model remain the same. The analysis is conducted using a steady-state evaluation.

4.6.2.1.2 Fire Accident

The thermal model of the W21 canister within the transfer cask used for evaluation of the accident conditions is identical to the model presented for normal conditions (see Section 4.4.2.1). Modifications to the transfer cask model for the fire analysis are discussed in Section 4.6.2 of the FuelSolutions™ Storage System FSAR. The fire accident scenario is assumed to start with the cask and canister system at the case 15 steady-state conditions (i.e., normal hot transfer). A maximum flame temperature of 1475°F, with an effective emissivity of 0.9, is assumed for the fire. The fire duration simulated is 5 minutes.

4.6.2.2 Maximum Temperatures

The peak temperatures noted in the W21 canister and transfer cask for the postulated loss of neutron shield accident are presented in Table 4.6-3. The temperatures for all components are within their respective allowable temperatures. The results from the transfer cask design basis analysis (see Section 4.6.2 of the FuelSolutions™ Storage System FSAR) are presented for comparison purposes and are seen as encompassing those for the W21 canister in the transfer cask.

Figure 4.6-4 and Figure 4.6-5 illustrate the temperature response of the canister and the transfer cask to the postulated 5-minute fire. With the exception of the neutron shield shell, all canister and cask components remain below the short-term allowable temperatures for the component. The large thermal mass of the canister assembly and cask, plus the thermal radiation shielding provided by the neutron shield shell, combine to largely mitigate the heat pulse from the fire. As a result, with the exception of the cask components at the edges of the cask, little temperature impact is seen from the presence of the fire. In fact, the bulk of the temperature increase exhibited between the initiation of the fire and the post-fire steady-state conditions is due to the assumption that the liquid neutron shield is lost.

Over 200 gallons of combustible fuel are required to create the engulfing fire conditions simulated by the analysis. The duration of the fire is limited to less than 5 minutes, as defined in the FuelSolutions™ Storage System FSAR. Fuel quantity is limited as indicated in the operating procedures in Section 8.1.10 of the FuelSolutions™ Storage System FSAR.

4.6.2.3 Minimum Temperatures

The minimum temperatures during a fire accident event are bounded by the normal cold and off-normal cold transfer conditions (cases 14 and 16).

4.6.2.4 Maximum Internal Pressures

W21 canister accident internal pressures are presented in Section 4.6.1.4. For determination of the accident canister pressure, 100% rod failures are postulated while conservatively assuming the W21 canister average gas temperature for off-normal hot storage conditions (125°F ambient, Section 4.1.4). Although the W21 canister average gas temperature under the postulated loss of neutron shield accident conditions within the transfer cask exceeds the corresponding gas temperature for off-normal hot storage conditions, failure of 100% of the rods does not need to be postulated concurrently with the other postulated transfer cask accident conditions. Since the short-term allowable cladding temperature presented in Section 4.3.2 (570°C) is not exceeded during W21 canister design basis accident conditions within the transfer cask, gross cladding failures do not occur. Similar to the discussion presented in Section 4.6.1.4, the canister accident internal pressure determined under the assumed condition of 100% rod failures at the off-normal hot storage temperature bounds even the conservative assumption of off-normal rod failures (10%) under the loss of neutron shield accident conditions.

As discussed in the FuelSolutions™ Storage System FSAR, the loss of neutron shield accident is caused by a breach of the liquid neutron shield pressure boundary, resulting in atmospheric pressure within the neutron shield.

4.6.2.5 Maximum Thermal Stresses

W21 canister thermal stresses within the transfer cask during accident conditions are addressed in Section 3.7.2 and 3.7.6 of this FSAR.

4.6.2.6 Evaluation of Canister Performance for Accident Conditions

4.6.2.6.1 Drained Liquid Neutron Shield

A steady-state analysis of the drained liquid neutron shield case demonstrates that the short-term allowable material temperatures for the W21 canister and the W100 Transfer Cask are not exceeded for the enveloping canister thermal rating for any site within the contiguous United States.

4.6.2.6.2 Fire Accident

A transient analysis of the fire accident for the W21 canister in the transfer cask demonstrates that the W21 canister short-term allowable material temperatures are not exceeded for a fire accident consistent with the requirements of 10CFR71.73(c)(4). Therefore, the W21 canister and

transfer cask are suitable for the transfer of fuel with thermal ratings that are bounded by the W21 canister thermal rating summarized in Table 4.1-4.

Table 4.6-3 - W21 Canister Temperatures for Postulated Transfer Cask Loss of Neutron Shield Accident[1]

Component	Case 18 Loss of Neutron Shield	Allowable Temperature[4]
Peak Fuel Rod Cladding	453.9°C	570°C
Guide Tube	815°F	1000°F
Spacer Plates:		
Stainless Steel	805°F	1000°F
Carbon Steel	812°F	1000°F
Support Rod	733°F	1000°F
Helium Bulk Temp.	707°F	N/A
Canister Shell	671°F	1000°F
Cask Inner Liner	522°F	1000°F
Cask Lead Shield	519°F	620°F
Cask Structural Shell	492°F	1000°F
Liquid Neutron Shield	N/A	N/A
Neutron Shield Pressure	N/A	N/A
Cask Thermocouple[2]	490°F	N/A
Reference Results from Table 4.6-4 of the FuelSolutions™ Storage System FSAR		
Cask Lead[3]	*568 °F*	--
Cask Thermocouple[2, 3]	*514 °F*	--

Notes:

(1) Except as noted, temperatures in this table are based on a heat load of 25.1 kW.

(2) Estimated thermocouple reading for analyzed condition.

(3) Temperatures based on heat load of 28 kW.

(4) Short-term allowable temperatures apply for the canister (from Table 4.3-1) and the transfer cask (from Table 4.3-2 of the FuelSolutions™ Storage System FSAR).

Table 4.6-4 - W21 Canister Peak Temperatures During Transfer Cask Fire Accident[1]

Component	Pre-Fire Steady State	Fire Transient ($0 \leq t \leq 30$ min.)	Post-Fire[2] Cool-Down / Steady State	Short Term Limit[4]
Peak Fuel Rod Cladding	406°C	406°C	454°C	570°C
Spacer Plate	710°F	710°F	812°F	1000°F
Canister Shell	556°F	559°F	671°F	1000°F
Cask Inner Shell	338°F	338°F	522°F	1000°F
Cask Lead Shield	334°F	334°F	519°F	620°F
Cask Outer Shell	255°F	273°F	491°F	1000°F
Liquid Neutron Shield Skin	240°F	1116°F[3]	236°F	1000°F

Notes:

(1) Analysis performed for a conservative Q_{max} of 28 kW.

(2) Based on steady-state temperature.

(3) Peak stainless steel temperature at the liquid neutron shield outer shell exceeds the short-term allowable temperature, but remains lower than the stainless steel melting point temperature (2600°F).

(4) Short-term allowable temperatures apply for the canister (from Table 4.3-1) and the transfer cask (from Table 4.3-2 of the FuelSolutions™ Storage System FSAR).

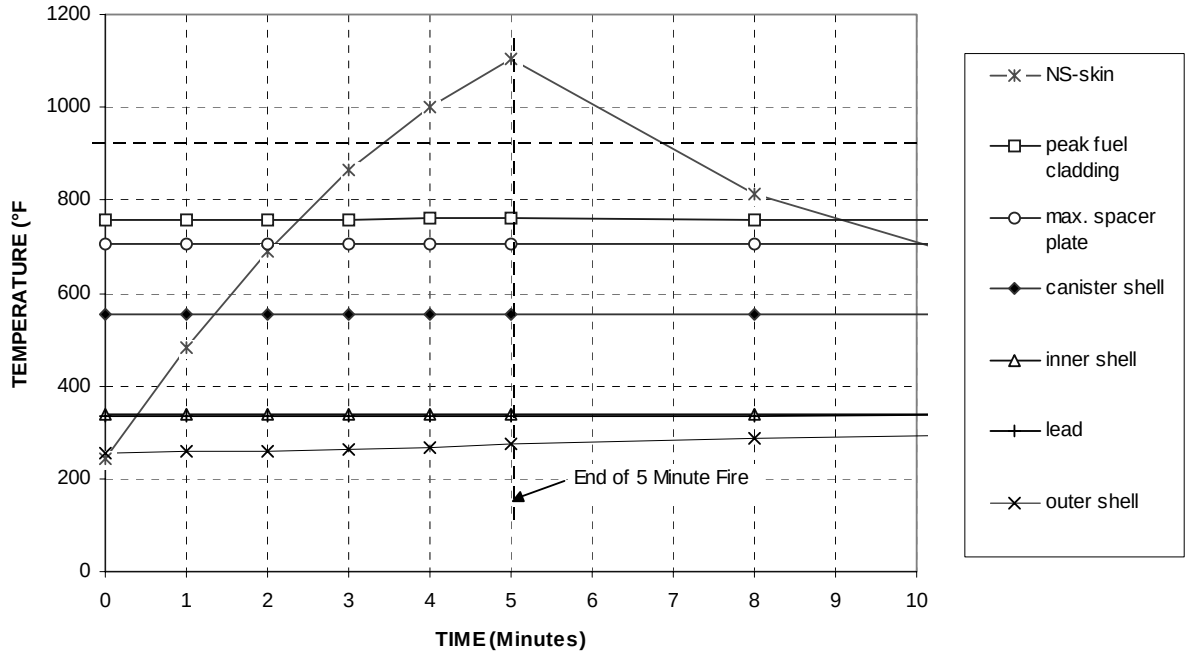

Figure 4.6-4 - W21 Canister and Transfer Cask Fire Accident Temperature Response (0-10 minutes)

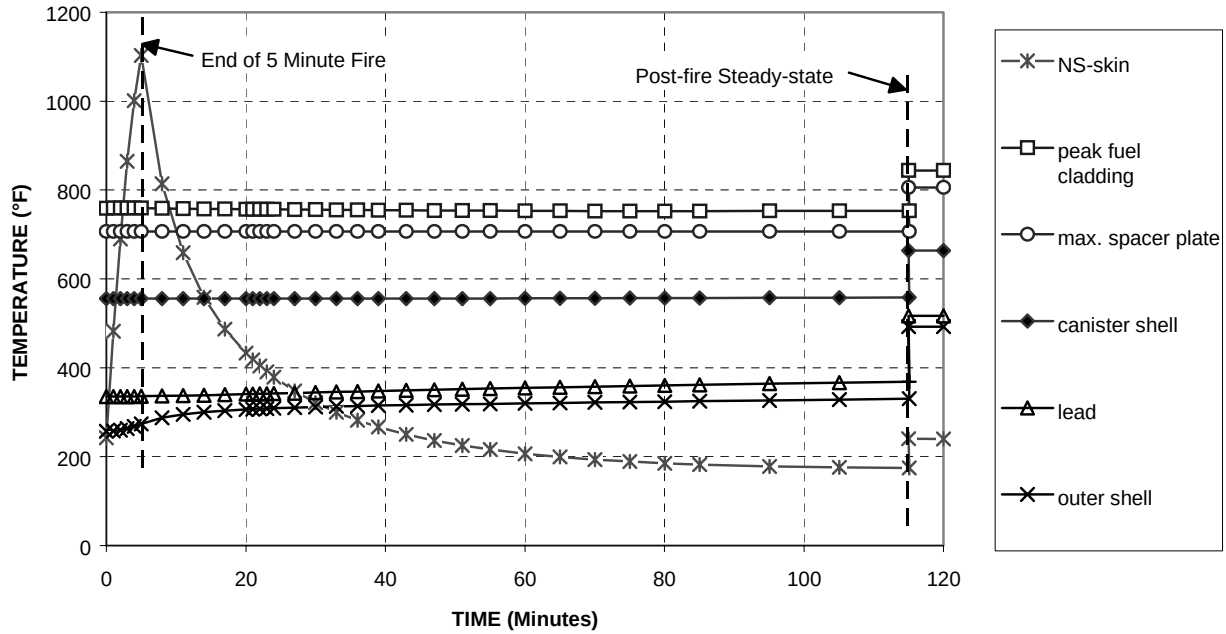

Figure 4.6-5 - W21 Canister and Transfer Cask Fire Accident Temperature Response (0-2 hours)

This page intentionally left blank.

4.7 Supplemental Data

4.7.1 Canister Internal Convection

Beyond conduction and radiation heat transfer, the principal heat transfer mode within the basket assembly is convection. This is true for both the vertical and the horizontal orientations of the basket assembly. The following paragraphs provide a more specific description of the approach and equations used for the W21 basket assembly.

To account for the natural convection heat transfer interaction within the W21 basket assembly, the internal flow environment is divided into a series of related flow regions and the results from each region superimposed on the global solution to arrive at a unified result. Convection heat transfer coefficients are determined for each flow region based on its particular physical and behavioral characteristics. The analytical algorithms used to determine these coefficients are computed as a function of the local environment (i.e., geometry, temperatures, and pressures) and are incorporated into the SINDA/FLUINT iterative solution. The following paragraphs describe the approach for each orientation.

Horizontal Orientation

The fact that the basket assemblies are keyed within the canister and the canister is aligned within the transfer and transportation casks assures that the global orientation of the fuel assemblies remains essentially constant for each transport cycle. As such, the analysis of the fluid flow due to convection within a horizontally oriented basket is approached as an analysis of a series of vertically oriented channels. The general flow pattern is one where the helium blanket gas is transported upward under buoyancy forces through the basket and then downward along the inside circumference of the canister. Superimposed on this predominant flow pattern is a series of sub-flow paths at each of the double open-ended cavities created between the upper and lower edges of adjacent guide tubes.

A representation of the assumed flow pattern is presented in Figure 4.7-1 for the W21 basket assembly. The two main underlying assumptions for this type of buoyancy-driven recirculating flow field are that it is incompressible and that the flow is nominally two-dimensional. Although discontinuities occur at the upper and lower edges of each guide tube, the vertical channels formed between pairs of guide tubes can be analytically treated as smooth wall channels for the purposes of determining the governing convection heat transfer rates. This is a result of the relatively close spacing of the guide tubes and the estimated flow velocities yielding Reynolds numbers on the order of 100. The assumed flow pattern and the smooth wall channel assumption are confirmed by the measured flow velocities from the testing on a similar basket layout conducted by Kawasaki Heavy Industries.[27] The results of this testing is summarized by Figure 4.7-2 and Figure 4.7-3.

Based on these assumptions, the natural convection in vertical channels with symmetric and uniform wall heat flux is estimated using equations 3.65 and 3.66 of Bar-Cohen[28] where the

[27] Nishimura, M., et al., *Natural Convection Heat Transfer in the Horizontal Dry Storage System for the LWR Spent Fuel Assemblies*, Journal of Nuclear Science and Technology, Vol. 33, No. 11, pp. 821-828, November 1996.

characteristic length is the height of the channel. These equations are applicable over the range of $3x10^{-1} < Ra^* < 3x10^4$ and are as follows:

$$Nu_{\frac{L}{2}} = \frac{h_c L}{k} = \left\{\left(\frac{12}{Ra^*}\right) + \frac{17}{70}\right\}^{-1} \quad 3x10^{-1} < Ra^* < 3x10^4$$

for the mean value on each wall and

$$Nu_L = \frac{h_c L}{k} = \left\{\left(\frac{48}{Ra^*}\right) + \frac{17}{70}\right\}^{-1} \quad 3x10^{-1} < Ra^* < 3x10^4$$

for the exit region value on each wall Ra* is defined as:

$$Ra^* = Gr \cdot Pr = \frac{g\beta q b^5 \mu C_P}{L \nu^2 \kappa^2}$$

where:

g = Gravitational acceleration

β = Coefficient of thermal expansion

q = Heat flux density

b = Channel gap width

μ = Dynamic viscosity

C_P = Specific heat

L = Height of the channel

ν = Kinematic viscosity

k = Thermal conductance

The wall heat flux, q, used in the equations is computed using the surface area of the guide tube over the active length of the fuel and then adjusted at each specific basket location to account for the placement of the fuel within the basket and the fuel peaking factor along the length of the fuel assembly. The computed heat flux is further adjusted to account for the fact that any heat dissipated out the horizontal surfaces of the guide tubes ultimately ends up in the vertical channel and is available to feed the buoyancy-driven flow.

Radiation and conduction from the guide tubes into the spacer plates results in the spacer plate temperatures being significantly above the local gas temperature. As such, the characteristic heat transfer coefficients determined for the guide tube walls are also applied to the adjacent spacer

[28] Bar-Cohen, A. and Kraus, A.D., *Advances In Thermal Modeling of Electronic Components and Systems*, Hemisphere Publishing Corporation, Vol. 1, 1988.

plate surfaces. Although this assumption of two-dimensional flow behavior is not necessarily conservative, it is offset by the assumption that the flow within the vertical channels is fully developed and by the fact that the channel flow correlation includes the flow that is within an enclosure. In reality, based on a Reynolds analogy, the approximate flow development length within the largest vertical channel for the W21 basket assembly is approximately half of the channel height. This means that higher than predicted convection heat transfer will actually exist within the channels.

The convection heat transfer rates from the upper and lower surfaces of each guide tube pair is addressed using a correlation for the average Nusselt number within horizontal cavities. The correlation is developed using the findings presented in several papers pertaining to buoyant-driven flow from open-ended cavities.

The correlation includes the effects of the cavity configuration, the Rayleigh number (Ra), and aspect ratio (A), defined as:

$$A = \frac{H}{L},$$

where H is the separation distance between the guide tubes and L is one-half the width of the guide tubes.

The cavity Rayleigh number is defined as:

$$Ra = Gr \cdot Pr,$$

where:

$$Gr = \frac{g\beta(T_W - T_\infty)H^3}{\nu^2},$$

and

$$Pr = \frac{\mu C_p}{\kappa} = \frac{\nu}{\alpha}.$$

The cavity configuration depicted in Figure 4.7-4 is the most similar to the horizontally oriented double open-ended cavities occurring in the W21 basket geometry. The correlation selected for the double open-ended cavities within the W21 basket assembly is:

$$\overline{Nu_c} = \frac{h_c L}{k} = 0.110 \cdot ((A)^{\frac{3}{2}} \cdot Ra)^{0.345} \qquad 60 \le Ra \le 2 \times 10^3$$

where the characteristic length is one-half of the width of the guide tube. This correlation is evaluated within the SINDA/FLUINT thermal model based on the local thermal properties and cavity aspect ratio for each horizontal cavity formed by the upper and lower surfaces of the guide

tubes. The resulting Nusselt number is used to compute a convective heat transfer rate from the horizontal surfaces of the guide tubes and the local gas temperature within the vertical channels.

The convection heat transfer from the guide tube and spacer plate surfaces which lie outside of the basket interior are computed using the isolated surface correlations for flat plates in the horizontal and vertical orientation. The same correlations are used for the canister shell surfaces.

Vertical Orientation

Convection heat transfer within a vertically oriented canister is assumed to be symmetrical for about a 1/8 segment of the basket. However, since the basic thermal model encompasses a 90° segment, it is used for the computation of the temperature distribution in the vertical orientation. Figure 4.7-6 illustrates the layout of the gas nodes used in the SINDA/FLUINT model.

The principal flow pattern between each pair of spacer plates is as depicted in Figure 4.7-7. The flow pattern consists of a series of overlapping convection loops starting at the canister wall and extending into the center of the basket. As the convection flow passes along the topside of the lower spacer plate the flow bifurcates. A portion of the flow separates and is carried upward due to the convection flow at each guide tube surface. The balance of the flow continues inward toward the center of the basket. The outward flow pattern consists of a flow along the underside of the upper spacer plate, with the flow at each pair of guide tubes joining in and adding strength to the outward bound flow. Upon reaching the canister wall, the flow is cooled, drops to the lower plate, and begins the loop over again.

By idealizing the channels formed between the guide tubes as horizontal channels with heated and cooled ends and perfecting conducting horizontal surfaces, an estimate can be made of the strength of the convection flow between the inside surface of the canister (i.e., the cold wall) and the interior of the basket (i.e., the hot wall). The fact that guide tube surfaces between the center of the basket and the canister wall are not adiabatic, but actively participate in adding heat energy to the flow acts to offset any negative impact due to the proximity of the side walls (i.e., the guide tubes) on the convection flow.

It should be noted that convective heat transfer in the region within the guide tubes is conservatively ignored. The only mechanisms for heat transfer within this fuel region are conduction and radiation (refer to Section 4.2.2). This is particularly conservative for the vertical orientation, wherein the “chimney effect” would produce additional convective cooling in the hottest active fuel regions.

The spacing between spacer plates is six inches or less, while the inner radius of the canister is 32.375 inches. These dimensions lead to enclosure aspect ratios of less than 0.2. Equations 18 and 20 from Churchill[29] recommend the Nusselt number be computed via the following:

$$\mathrm{Nu_d} = 1 + \frac{(\mathrm{Ra_h}\alpha)^2}{362{,}880}, \text{ Eqn. 18 for the laminar asymptotic region}$$

[29] Churchill, S.W., *Heat Exchanger Design Handbook*, “Free Convection in Layers and Enclosures,” Section 2.5.8, Hemisphere, Washington, 1983.

$$\mathrm{Nu_d} = \alpha^{-1}\left[\frac{\mathrm{Ra_h}\, f(\mathrm{Pr})}{10.66}\right]^{0.2}$$, Eqn. 20 for the laminar boundary-layer regime

where:

$\mathrm{Nu_d}$ = h_c d/k

α = aspect ratio, height of cavity/depth of cavity, h/d
< 0.6

$\mathrm{Ra_h}$ = Rayleigh number based on cavity height, h
< 10^8

$f(\mathrm{Pr})$ = function of Prandtl number, = $\left[1+\left(\frac{0.5}{\mathrm{Pr}}\right)^{\frac{9}{16}}\right]^{\frac{16}{9}}$

Equation 20 from Churchill demonstrates the fact that the heat transfer coefficient in the channel is increasingly independent of the depth of the channel (d) as the Rayleigh number increases into the boundary layer regime (i.e., Ra > 10^5).

In practice, the distance between the spacer plates is taken as "h" and the distance between each pair of guide tubes and the canister shell wall is taken as "d." In this manner, the strength of each convection loop shown in Figure 4.7-7 is estimated via the following steps:

1. Assume "d" equals the distance from the gas node to the canister shell (i.e., one-half of the ID of the canister shell for the inner gas node),

2. Evaluate Equations 18 and 20 from Churchill and select the minimum of the two values,

3. The estimated Nusselt number is converted to an effective thermal conductance between the gas node at inner guide tube pair and the gas node at the next guide tube pair via the equation: $G = (h\, w\, \mathrm{Nu_d}\, k_{\mathrm{helium}} / d) \cdot d / L$, where h = spacing between spacer plates, w = gap between the guide tube pair, d = distance to the canister shell wall, and L = distance to next gas node.

4. Repeat steps 1 to 3 for the next gas node and add the computed effective thermal conductance for the previous gas node pair. In this manner, the strength of the convection loop will increase as thermal energy from each guide tube pair is added.

5. Repeat the entire sequence for the other channels formed by the space between guide tubes.

The convection heat transfer from the guide tube and spacer plate surfaces that lie outside the basket interior are computed using the isolated surface correlations for flat plates in the horizontal and vertical orientation. The same correlations are used for the canister shell surfaces.

4.7.2 Other Modes of Heat Transfer

Convection From Isolated Surfaces

Natural convection from a discrete vertical surface is computed using Equations 6-39 to 6-42 of Rohsenow,[30] where the characteristic length is the height of the surface. These equations are applicable over the range 1 < Ra < 10^{12}, as follows:

$$Nu^T = \overline{C}_L Ra^{1/4}$$

$$\overline{C}_l = 0.75\left[\frac{0.503}{\left(1+\left(0.492/\mathrm{Pr}\right)^{9/16}\right)^{4/9}}\right]$$

$$\mathrm{Nu_L} = \frac{2.8}{\ln\left(1+2.8/\mathrm{Nu^T}\right)}$$

$$Nu_t = C_t^V Ra^{1/3}$$

$$C_t^V = \frac{0.13\,\mathrm{Pr}^{0.22}}{\left(1+0.61\,\mathrm{Pr}^{0.81}\right)^{0.42}}$$

$$\mathrm{Nu} = \frac{\mathrm{h_c L}}{\mathrm{k}} = \left[(\mathrm{Nu_L})^6 + (\mathrm{Nu_t})^6\right]^{1/6}$$

Natural convection from upward facing horizontal surfaces is computed from Equations 7-21 and 7-22 of Kreith,[31] where the characteristic dimension (L) is typically the width of the surface, or for non-square shapes, the characteristic length may be calculated from L = 0.9 diameter for disk shapes and L = mean of the length and the width for rectangles. These equations are applicable over the range 10^5 < Ra < 3 x 10^{10}, as follows:

$$Nu = \frac{h_c L}{k} = 0.54 Ra^{1/3} \quad 10^5 < Ra < 2\,x\,10^7$$

$$Nu = \frac{h_c L}{k} = 0.14 Ra^{1/3} \quad 2\,x\,10^7 < Ra < 3\,x\,10^{10}$$

[30] Rohsenow, Harnett, and Ganic, *Handbook of Heat Transfer Fundamentals*, 2nd Edition, McGraw-Hill, Inc., 1989.

[31] Kreith, F., *Principles of Heat Transfer*, 3rd Edition, Intext Press, Inc., 1973.

Natural convection from downward facing horizontal surfaces is computed from Equation 7-23a of Kreith.[31] The characteristic length is the length of the surface. This equation is applicable over the range $3 \times 10^5 < Ra < 3 \times 10^{10}$, as follows:

$$Nu = \frac{h_c L}{k} = 0.27 Ra^{1/4} \quad 3x10^5 < Ra < 3x10^{10}$$

Natural convection from cylindrical surfaces is computed from Equation 3-43 of Chapter 1 from Guyer.[32] The characteristic length is the diameter of the cylinder. This equation is applicable over the range $10^{-5} < Ra < 10^{12}$ and is as follows:

$$\mathrm{Nu} = \frac{\mathrm{h_c d}}{\mathrm{k}} = \left\{ 0.60 + \frac{0.387\mathrm{Ra}^{1/6}}{\left[1 + \left(0.559/\mathrm{Pr}\right)^{9/16}\right]^{8/27}} \right\}^2 \quad 10^{-5} < \mathrm{Ra} < 10^{12}$$

Radiation Heat Transfer

Radiation heat transfer is computed using standard gray-body equations. Shape factors between the fuel assemblies, the basket assembly surfaces, the canister shell, and the transportation cask are computed using either pre-defined relationships or the string method for standard geometric configurations. For complex, non-standard shapes, the VIEWH™ program[20] is used to calculate the radiation view factors. Once the view factor $F_{1\text{-}2}$ is obtained by either method, it is used to compute the Hottel script $\mathbf{F_{1\text{-}2}}$ combined geometric shape and emissivity factor via the equation:

$$\text{Hottel script } \mathbf{F_{1\text{-}2}} = \frac{1}{\left(\frac{1}{\varepsilon_1} - 1\right) + \left(\frac{1}{F_{1-2}}\right) + \left(\frac{A_1}{A_2}\right)\left(\frac{1}{\varepsilon_2} - 1\right)}$$

The heat transferred via radiation interchange, where σ is the Stefan-Boltzmann constant, is:

$$q = \sigma A_1 \mathbf{F_{1-2}} \left(T_1^4 - T_2^4\right)$$

Values of (A_1 $\mathbf{F_{1\text{-}2}}$) are provided in the SINDA/FLUINT input deck for each radiation conductor. The program automatically computes the T^4 values using the absolute temperature and adds the Stefan-Boltzmann constant σ.

The modes of heat transfer discussed in detail within this section are used for the W21 canister thermal analysis discussed in Sections 4.4, 4.5, and 4.6 for normal, off-normal, and postulated accident, respectively.

[32] Guyer, E.C., *Handbook of Applied Thermal Design*, McGraw-Hill, Inc., 1989.

4.7.3 Correlation With Test Data

As a test of the equations developed above for the horizontal basket orientation, the temperature rise in the basket is compared against that predicted using the correlation presented in Figure 4.7-8 for the NUHOMS® 24 unit canister. Changes made to the W21 canister thermal model for this comparison include eliminating the radiation conductors since only the heat transferred by convection is under question, reducing the gap dimension between the guide tubes to 1.575 inches corresponding to the full scale dimensions of the test setup, and setting the canister wall temperature to a fixed value of 200°C to match the uniform boundary conditions established by the test setup and the temperature range of interest for this application. For the purposes of the comparison, a decay heat load of 26 kW and a helium backfill are assumed.

The average temperature of the guide tube surfaces at the center channel, as predicted by this analytical model of the test setup, is 385°C. Given a 200°C canister wall, this yields a ΔT of 185°C. The Rayleigh number computed for this steady-state result is 1.244×10^7.

Per the Figure 4.7-8 correlation, the expected temperature rise in the basket is related to the Nusselt number via the equation:

$$Nu = q_s R_c / \Delta T \lambda$$

where:

Nu	=	Nusselt number
q_s	=	unit area heat flux
R_c	=	canister radius = 32.375 inches
ΔT	=	temperature rise from canister wall to average guide tube surface in center channel
λ	=	thermal conductivity of the fill gas

Based on the correlation in Figure 4.7-8, the Nusselt number is approximately 6.5 for the Rayleigh number of interest. Assuming a heat load rating of 26 kW, 21 assemblies, and a surface area of 36.4 square feet per guide tube assembly over the active region of the fuel, the value of q_s is 34.01 watts per square foot, or 116 Btu/hr-ft^2. Therefore, based on λ for helium equal to 0.126 Btu/hr-ft-°F, the ΔT predicted from the correlation is 384°F, or 213°C. This value is 15% higher than that computed by the analytical model, but well within the 25% the authors noted in their data correlation.

Further, the W21 basket layout does not fully duplicate the geometry of the NUHOMS® 24 unit design, with the W21 basket expected to yield a lower ΔT even with similar guide tube channel gap sizes. As such, these results are seen as effectively validating the analytical modeling approach for convection in a horizontal basket.

4.7.4 Computer Code Descriptions

4.7.4.1 SINDA/FLUINT Computer Code

The analytical thermal models for the storage and transfer casks are developed using the SINDA/FLUINT heat transfer code. This finite difference, lumped parameter code was developed under the sponsorship of the NASA Johnson Space Center and has been evaluated and validated for simulating the thermal response of transportation packages.[33] The program is available as either a public domain code from the government software libraries, or in one of several forms from private vendors. The program is validated for use per the BNG Fuel Solutions Quality Assurance program. In addition, the code has been used for the analysis and subsequent licensing of several other transportation packages for nuclear material, including the RTG transportation package[34] and the TRUPACT-II transportation package.[35]

The SINDA/FLUINT code provides the capability to simulate steady-state and transient temperatures using temperature-dependent material properties and heat transfer via conduction, convection, and radiation. Heat transfer solutions for one-, two-, or three-dimensional problems may be programmed. Complex algorithms may be programmed into the solution process for the purposes of computing the various heat transfer coefficients as a function of geometry, fluid, and temperatures; or, for example, to estimate the effects of buoyancy-driven heat transfer. Standard algorithms are used for computing the convection heat transfer from common surfaces (i.e., vertical and horizontal plates, cylinders, etc.) as a function of the surface geometry, the fluid properties, and the temperatures.

A major feature of the SINDA/FLUINT code used for this modeling is the ability to use thermal submodels to represent common geometry sections of the canister shell, guide tubes, spacer plates, etc. A thermal submodel is defined as a thermal model which contains the necessary information to be independently solved for the temperatures of the components which it simulates, but which depends on one or more other thermal submodels for some or all of its boundary conditions. Thermal interconnections are provided to allow the various thermal submodels to "communicate" with each other. This thermal modeling approach simplifies the modeling and verification process by minimizing the amount of original coding required to provide a complete thermal representation of the system.

4.7.4.2 VIEWH Computer Code

The analytical thermal model for the W21 canister is developed using VIEWH 5.6.9 to compute the radiation view factors within the basket assembly. The VIEWH program was developed by the Department of Mechanical Engineering at the University of Washington, Seattle, WA 98195,

---

[33] SAND88-0380, Glass, R.E., et al., *Standard Thermal Problem Set for the Evaluation of Heat Transfer Codes Used in the Assessment of Transportation Packages*, Sandia National Laboratories, August 1988.

[34] DOE Docket No. 94-6-9904, *Radioisotope Thermoelectric Generator Transportation System Safety Analysis Report for Packaging*, WHC-SD-RTG-SARP-001, prepared for the U.S. Department of Energy Office of Nuclear Energy under Contract No. DE-AC06-87RL10930 by Westinghouse Hanford Company, Richland, WA.

[35] NRC Certificate of Compliance Number 9218 for TRUPACT-II Package, application docket number 71-9218 prepared for the U.S. Nuclear Regulatory Commission by Nuclear Packaging Inc., Federal Way, WA, March 3, 1989.

under the sponsorship of the National Aeronautics and Space Administration. The program computes view factors based on a method similar to the Nusselt Projection Method. VIEWH is validated for use on the FuelSolutions™ Spent Fuel Management System project per the BNG Fuel Solutions Quality Assurance program. In addition, the code has been used for the analysis and subsequent licensing of the RTG transportation package.[34]

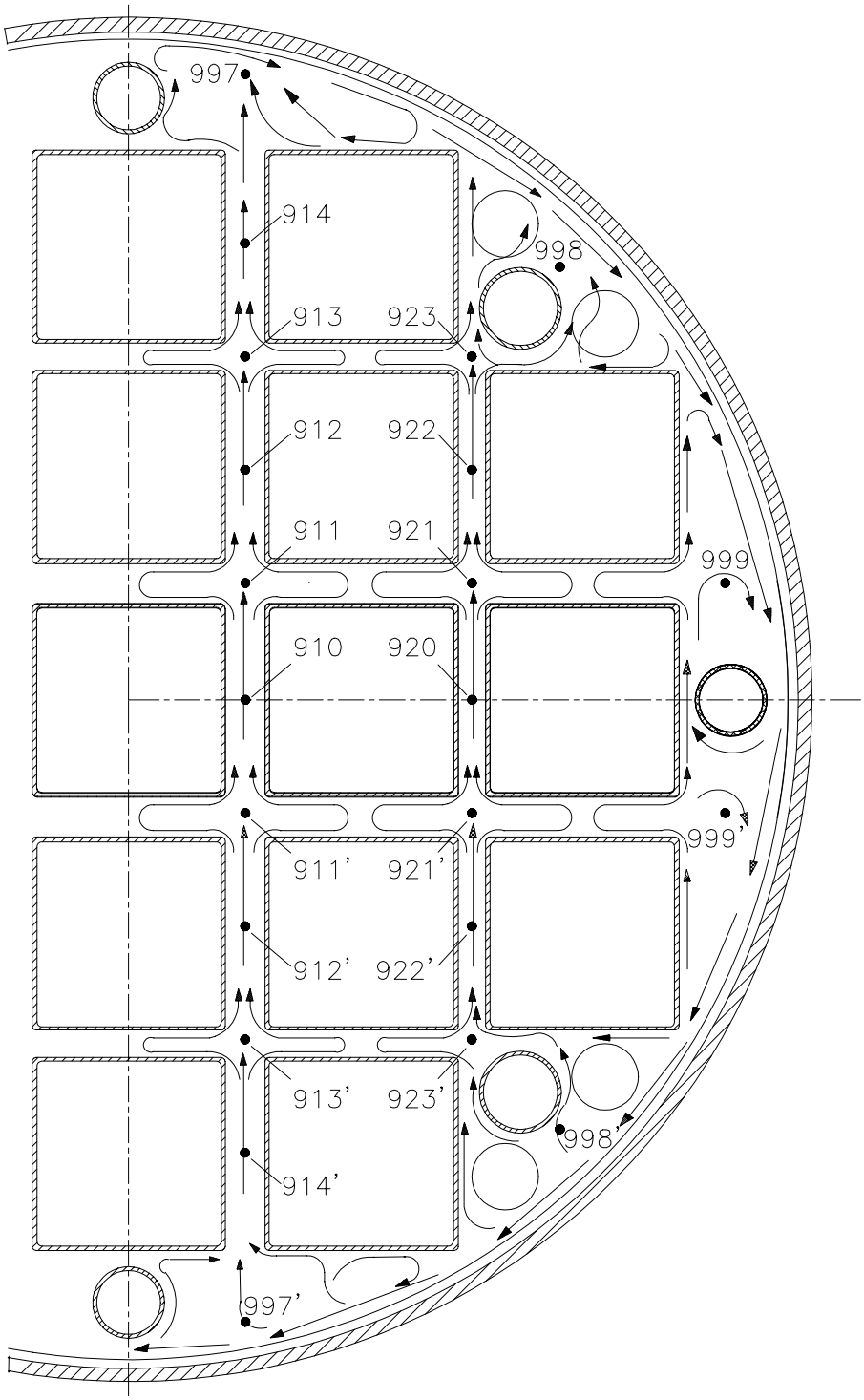

Figure 4.7-1 - Gas Node and Flow Pattern in Horizontal Canister

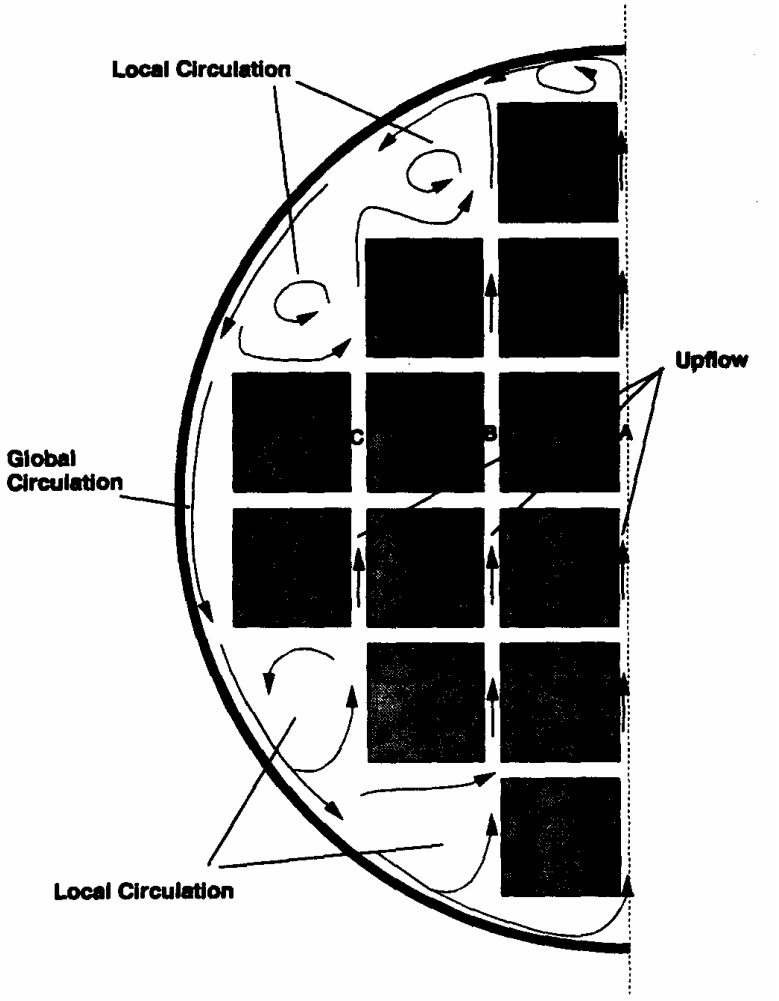

(a) Ra=9.3×10^6, Fluid: Air

Figure 4.7-2 - Circulation Pattern within NUHOMS® 24 Unit DSC

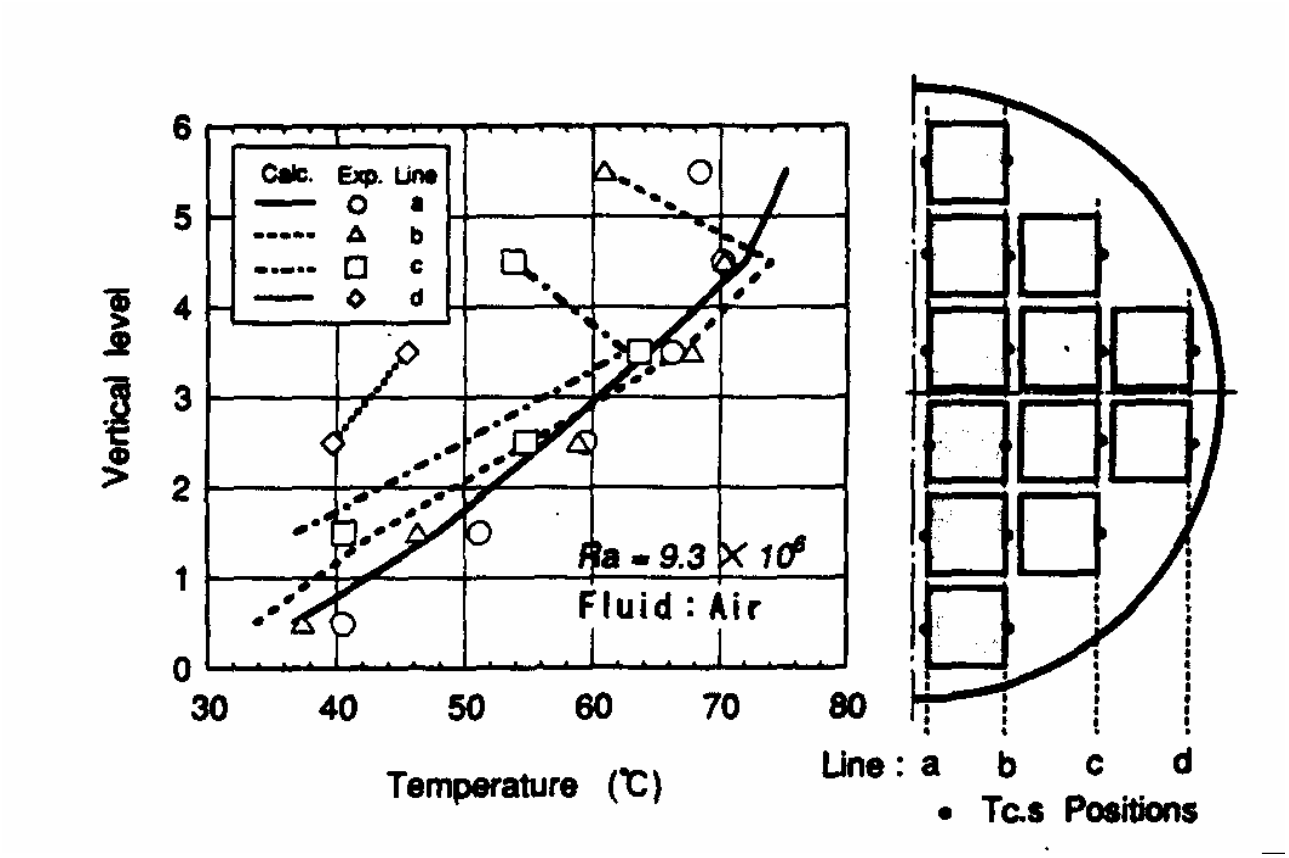

Figure 4.7-3 - Temperature Distribution in NUHOMS® 24 Unit Basket

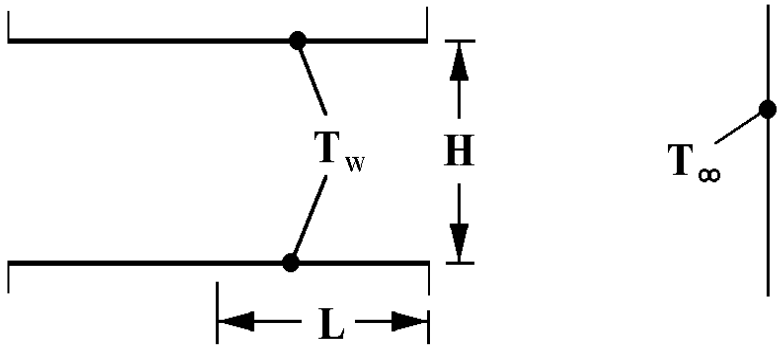

Figure 4.7-4 - Double Open-Ended Cavity with Two Heated Walls

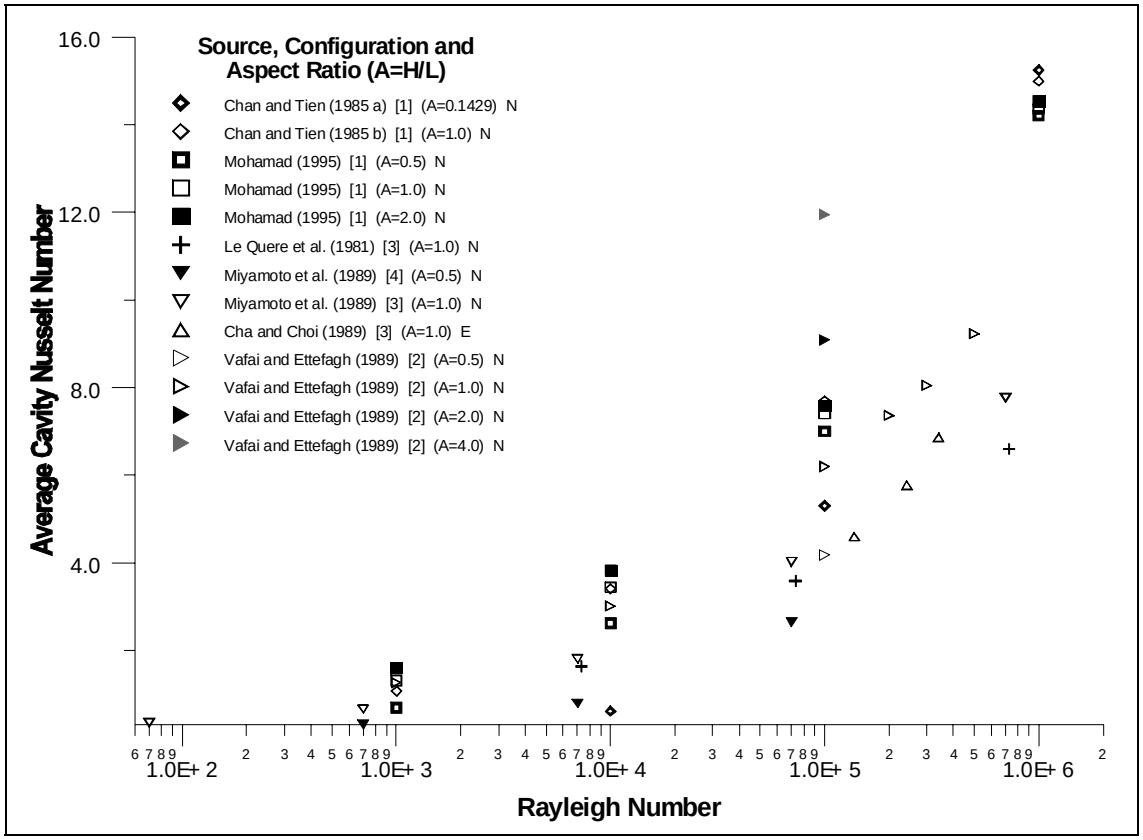

Figure 4.7-5 - Average Cavity Nusselt Number as a Function of Rayleigh Number and Aspect Ratio

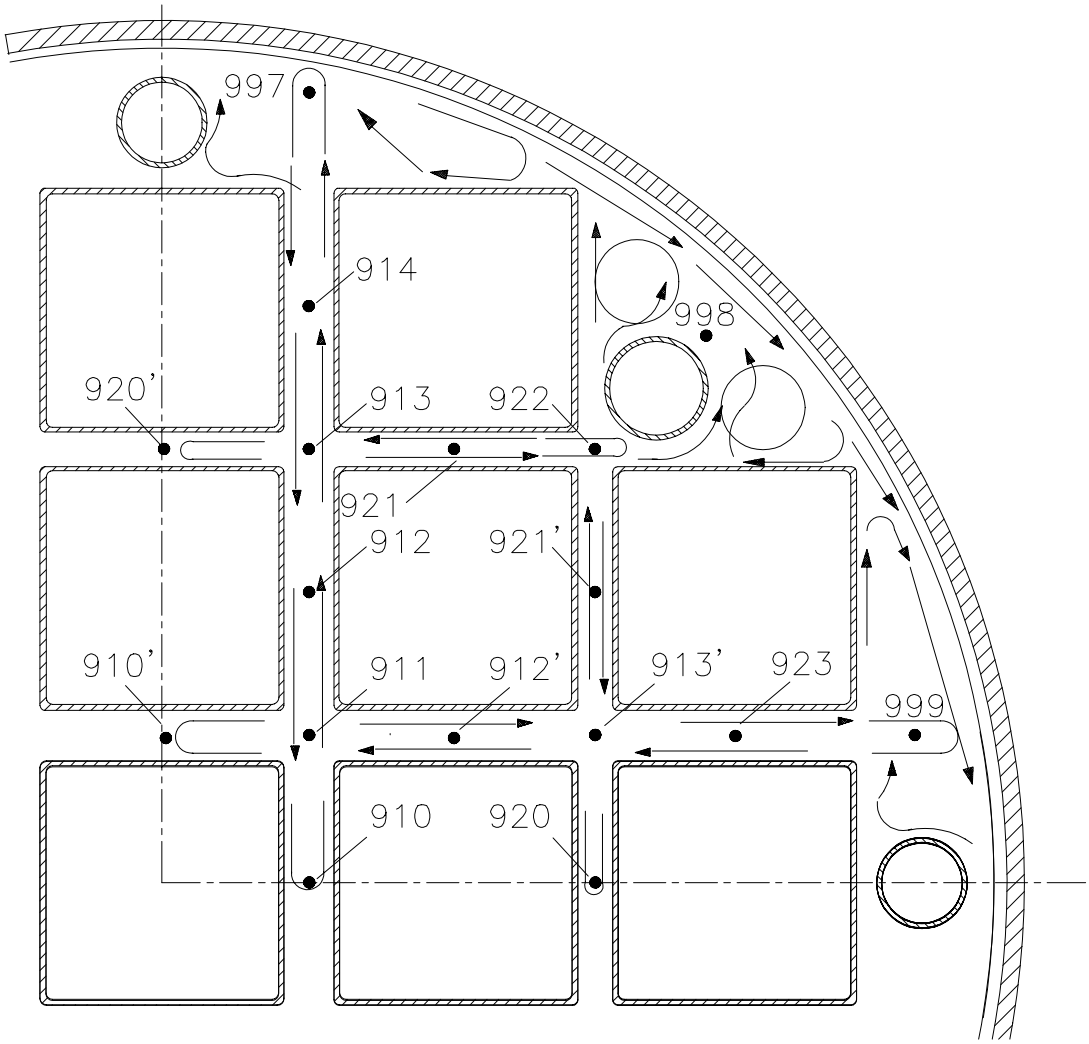

Figure 4.7-6 - Gas Node Layout for Vertical Canister

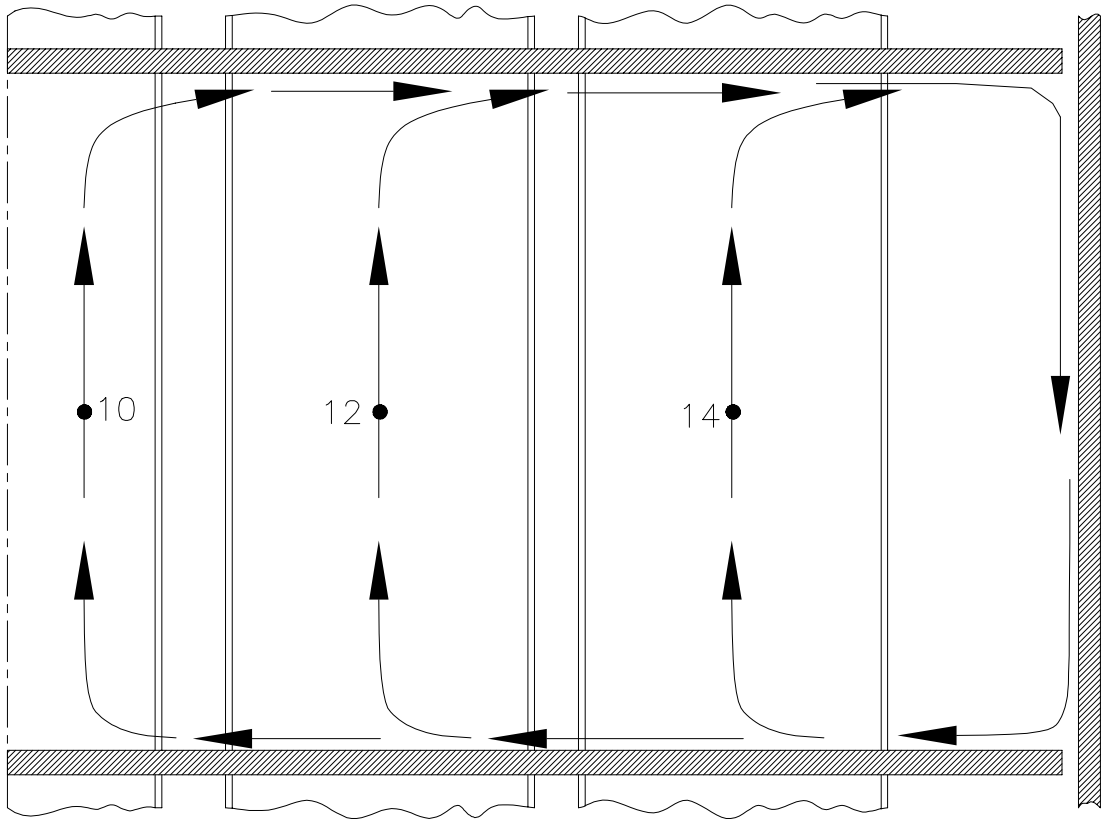

Figure 4.7-7 - Flow Pattern for Vertical Canister

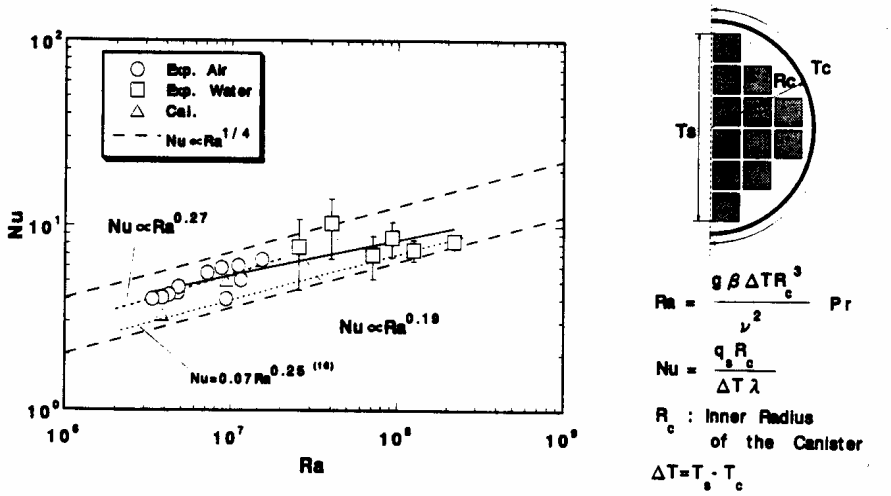

Fig. 5 Heat transfer characteristics

Figure 4.7-8 - Correlation of NUHOMS® 24 Unit DSC Test Results

5. SHIELDING EVALUATION

This chapter discusses the shielding evaluation for the FuelSolutions™ W21 canister. It describes the canister's major shielding design features, presents the W21 fuel cooling tables (which are the primary method of controlling radiological and thermal source terms for SNF to be stored in the FuelSolutions™ W21 canister), and presents the W21 canister-unique shielding calculations.

This chapter of the FuelSolutions™ W21 canister storage FSAR contains:

- A description of the shielding design features for the subject FuelSolutions™ canister.
- The fuel cooling tables for the subject FuelSolutions™ canister.
- A discussion of the canister-specific shielding calculations.
- A discussion of any differences from the generic methodology described in Chapter 5 of the FuelSolutions™ Storage System FSAR.

Chapter 5 of the FuelSolutions™ Storage System FSAR contains descriptions of:

- The shielding design features for the FuelSolutions™ Storage System components.
- Shielding analysis results for the FuelSolutions™ Storage System components.
- The radiological source terms and the fuel cooling tables and how they are derived.
- Shielding methodologies and assumptions used.

Chapter 10 (Radiation Protection) of this FSAR contains discussions of:

- The differences in the estimated occupational and public exposures for the FuelSolutions™ Storage System contained in Chapter 10 of the FuelSolutions™ Storage System FSAR for the subject FuelSolutions™ canister.
- The estimated radiological consequences of postulated accident conditions for the subject FuelSolutions™ canister.

This page intentionally left blank.

5.1 Discussion and Results

5.1.1 FuelSolutions™ W21 Canister Shielding Design Features

The FuelSolutions™ W21 canister provides confinement for radionuclides via the welded stainless steel shell assembly, and radiation shielding in the axial directions via thick metal shield plugs located at both ends of the canister. This axial shielding maintains radiation exposures ALARA during canister sealing operations, canister transfer operations, and dry storage. The canister cylindrical shell provides a relatively small amount of shielding in the radial direction in addition to its confinement function.

The W21 canister is available in two classes: the W21M and W21T, as described in Section 1.2.1.3. Both classes of canisters and the canister types within a canister class are similar from a shielding safety standpoint since they have the same cylindrical shells, closure plates, and similar internal basket components. Because the canister shield plug materials vary among canister classes and types, dose rates at the end of the canister vary depending on whether carbon steel, steel/lead, or steel/depleted uranium shield plugs are used. Table 5.1-1 summarizes the FuelSolutions™ W21 canister shielding materials.

5.1.2 FuelSolutions™ W21 Canister Fuel Cooling Tables

The primary shielding evaluation results contained in this chapter are the FuelSolutions™ W21 canister fuel cooling tables. The fuel cooling tables define the required cooling times based on the SNF initial enrichment and burnup, and hence control the source terms for SNF to be stored in the FuelSolutions™ W21 canister. Section 5.2.1 presents the fuel cooling tables, describes their use, and discusses the criteria used to construct them.

A general description of fuel cooling tables and their construction is presented in Section 5.1 of the FuelSolutions™ Storage System FSAR.

5.1.3 FuelSolutions™ W21 Canister Adjoint Shielding Models

A key parameter used in constructing the FuelSolutions™ W21 fuel cooling tables is the adjoint importance functions. They are importance functions that relate the primary gamma, secondary gamma, and neutron dose rates for a W21 canister when stored in the W150 Storage Cask.

The W21 canister adjoint shielding model and results (importance functions) are presented in Sections 5.2 and 5.4, respectively.

Chapter 5 of the FuelSolutions™ Storage System FSAR provides a general description of the adjoint shielding models.

Table 5.1-1 - FuelSolutions™ W21 Canister Shielding Design Features Summary

	Canister Class and Type							
***Class*[1] →**	**W21M**				**W21T**			
***Type*[2] →**	**-LD**	**-LS**	**-SD**	**-SS**	**-LL**	**-LS**	**-SL**	**-SS**
Shell	0.63” Stainless Steel (all types)							
Top Closure								
Outer Closure Plate	2.00” Stainless Steel (all types)							
Inner Closure Plate	1.00” Stainless Steel (all types)							
Shield Plug (Top Sheet)	0.12” Steel	N/A	0.12” Steel	N/A	0.12” Steel	N/A	0.12” Steel	N/A
Shield Plug (Material)	2.1” DU	7.25” Steel	1.3” DU	7.25” Steel	3.4” Lead	7.25” Steel	3.8” Lead	7.25” Steel
Shield Plug (Bottom Plate)	1.6” Steel	N/A	3.6” Steel	N/A	1.6” Steel	N/A	1.6” Steel	N/A
Bottom Closure								
Closure Plate	1.0” Steel	1.0” Steel	1.6” Steel	1.0” Steel	1.0” Steel	1.0” Steel	1.0” Steel	1.0” Steel
Shield Plug (Material)	2.1” DU	5.8” Steel	1.9” DU	5.8” Steel	3.1” Lead	5.8” Steel	3.1” Lead	5.8” Steel
End Plate	1.8” Steel	1.8” Steel	1.8” Steel	1.8” Steel	1.0” Steel	1.8” Steel	1.8” Steel	1.8” Steel

Notes:

(1) M=MPC, T=Transport/Storage

(2) LD=Long /DU, LS=Long/Steel, SD=Short/DU, SS=Short /Steel, LL=Long/Lead, SL=Short/Lead

5.2 Source Specification

5.2.1 Fuel Cooling Tables

The FuelSolutions™ W21 canister fuel cooling tables presented in this section define the minimum required cooling times for SNF to meet the FuelSolutions™ system safety and design requirements defined in Chapter 2 of this FSAR. The cooling times are a function of the SNF initial enrichment and burnup. Section 5.2 of the FuelSolutions™ Storage System FSAR gives a generic description of the bases for, and construction of, the FuelSolutions™ fuel cooling tables.

FuelSolutions™ canisters may be loaded according to one or more loading specifications. Loading specifications are denoted by the canister (i.e., W21-1, W21-2, etc.), and each one has a corresponding fuel cooling table. If an alternate loading specification has no significant impact on required cooling times, or if credit is not currently taken for reduced source terms inherent in a fuel loading specification, the cooling times are identical and the table may reference the base cooling table.

Because gamma dose rates vary depending on the fuel assembly cobalt content and presence of control component assemblies, the cooling tables are split into two tables for each fuel loading specification. There is a standard table for relatively low cobalt content, and a high-cobalt table for relatively higher cobalt content. As an example, the standard- and high-cobalt cooling tables for the W21-1 loading specification are denoted W21-1-A and W21-1-B, respectively. Table 2.2-1 shows the cross-reference between W21 loading specifications and cooling tables.

The fuel cooling tables are shown in Table 5.2-1 through Table 5.2-4. Since no credit is currently taken for the reduced thermal and radiological source terms in loading specification W21-2, fuel cooling tables W21-2-A and W21-2-B refer to the respective W21-1 tables. Each of the tables includes an applicability statement and a summary of the design bases used to construct the table.

5.2.2 Design Bases for the Fuel Cooling Tables

The design bases for the W21 canister fuel cooling tables are the maximum allowable canister heat load and the allowable dose rate at the side wall of the FuelSolutions™ W150 Storage Cask.

The allowable heat loads are based on thermal calculations to determine the controlling bulk heat load for casks and canister independently (i.e., the storage cask/transfer cask, and canister). In order to address the effects of active fuel length and peaking factors, there is also a corresponding allowable on the maximum linear heat load for each component. The allowable heat load for a specific component may be due to temperature dependent allowable stresses for materials of construction, or allowable cladding temperatures (for canisters). The most limiting of these heat loads are used as the thermal criteria for generating the W21 canister fuel cooling tables, as summarized in Table 5.2-5. Refer to Chapter 4 of the FuelSolutions™ Storage System FSAR for the storage cask and transfer cask maximum heat load discussions. Chapter 4 of this FSAR presents the maximum heat load discussion for the W21 canister.

The radiological criteria for generating the W21 fuel cooling tables is a calculated allowable dose rate of 50 mrem/hr at the storage cask side wall. This basis is chosen to control the storage

cask side wall dose rate, which is the most important contributor to off-site doses to the public because of the orientation and relatively small size of the storage cask penetrations.

Any SNF assembly meeting the requirements of the *technical specification* provided in Section 12.3 of this FSAR, including the appropriate fuel cooling table, may be stored in the FuelSolutions™ W21 canister. The cooling tables are valid for any W21 canister class and type because the differences in W21 canister types do not significantly change the adjoint importance functions used to construct the fuel cooling tables. Since each state point (i.e., burnup, enrichment pair) in each fuel cooling table represents a cooling time for which all thermal and radiological constraints are met for a full canister load of similar SNF assemblies (assuming an upper bound loading of 0.471 MTU/assy over 144.0 inches), canisters may be loaded with fuel assemblies meeting the cooling requirements of any cell in the fuel cooling table. In all cases, the fuel assembly initial enrichment must not exceed the limit specified in Table 2.2-1 of this FSAR.

The fuel cooling tables are based on adjoint shielding models for a FuelSolutions™ W21 canister full of fuel. Short loading (i.e., some storage cell locations contain no SNF assemblies) of a canister is acceptable from a shielding safety standpoint because short loading reduces the amount of source term material and, hence, the occupational and off-site dose rates.

5.2.3 Special Considerations for the W21 Fuel Cooling Tables

Section 5.2.1 of the FuelSolutions™ Storage System FSAR describes the four areas where factors are included in the methodology to account for special considerations. These factors are included in the W21 ADSORB runs as described below.

A. *Burnup-specific thermal peaking factor*
   Thermal calculations to determine maximum allowable heat loads are performed using peaking profiles at a design burnup of 44,000 MWd/MT for PWR fuels. SNF assemblies with lower burnup have more pronounced axial peaks. Maximum canister heat loads are specified in units of bulk watts/canister. In order to assure that allowable system temperatures are not exceeded because of specifying bulk heats, an adjustment factor is assigned in ADSORB to reduce the allowable heat load in any burnup group less than these values. Any burnup greater than these values is acceptable because its axial peaking factor is bounded by the one assumed in the heat transfer calculations. An additional burnup-specific factor is included to account for non-UO_2 heat generation in SNF assemblies. The burnup-specific adjustment factors used to generate the W21 cooling tables are summarized in Table 5.2-6.

B. *Burnup-specific radiological axial peaking factors*
   Factors are applied in ADSORB to the calculated storage cask surface dose rates to account for axial burnup peaking in the SNF. Based on a review of maximum peaking factors for a worst case set of PWR burnup profiles,[1] burnup-dependent peaking factors are applied to gamma and neutron dose rates in ADSORB. The increase in primary gamma ray dose rate is assumed to be equal to the burnup peaking factors (see Table 5.2-6). Neutron and secondary gamma dose rates are assumed to vary as the fourth power of the burnup (see Table 5.2-8). The way these effects are accounted for is to artificially increase the gamma and neutron

[1] DOE/RW-0495, *Depletion and Package Modeling Assumptions for Actinide-Only Burnup Credit*, Office of Civilian Waste Management, U.S. Department of Energy, May 1997.

dose rates ADSORB calculates prior to comparing the total calculated dose rate to the dose rate criterion ADSORB uses to determine acceptable cooling times.

C. *Activated SNF hardware*
The generic gamma source term library does not account for activation of cladding and other non-fuel material. When calculating gamma dose rates for comparison against allowable values, ADSORB multiplies the primary gamma dose rate by a factor to account for activation, and then adds the product to BUGLE energy group 57 (1.0-1.5 MeV) before summing the dose contribution from all gamma groups. This factor varies as a function of burnup, enrichment, and cooling time as shown in Table 5.2-7. Calculation of the assembly hardware gamma source strength factor, for each cooling table state point, is described in detail in Section 5.5.3 of the FuelSolutions™ Storage System FSAR. This FSAR section explicitly describes functions (i.e., data strings) that are to be entered into the ADSORB code to perform the assembly hardware gamma source strength calculation for each state point.

D. *Subcritical neutron multiplication*
The generic gamma source term library does not account for subcritical neutron multiplication. When calculating neutron and secondary gamma dose rates, ADSORB multiplies these dose rates by a factor to account for subcritical multiplication. The subcritical neutron multiplication factor and related parameters used to construct the W21 cooling tables are summarized in Table 5.2-8.

5.2.4 Use of the Fuel Cooling Tables

In order to determine the minimum cooling time for a candidate SNF assembly:

1. Determine the fuel assembly's burnup (MWd/MT) and initial enrichment (w/o ^{235}U) from plant records.
2. Burnups greater than 60,000 MWd/MT are not qualified for dry storage.
3. Enrichments less than the minimum shown on the fuel cooling table, or greater than the criticality maximum allowable enrichment in Table 2.2-1 of this FSAR, are not qualified for dry storage.
4. Determine which FuelSolutions™ fuel loading specification applies to the planned canister loading.
5. Determine which cooling table to use as follows:
   - Look up the fuel design in Table 2.2-1.
   - Use the criteria in the footnotes of Table 2.2-1 to determine if the candidate fuel assembly is "standard" or "limiting" with respect to in-core cobalt.
   - Use the cooling table prescribed in the "standard" or "limiting" column.
6. Look up the minimum required cooling time by rounding up in burnup, and down in enrichment. This is for conservatism because higher burnups produce higher thermal and radiological sources, and (for a given burnup) lower enriched fuel has higher actinide concentrations which results in higher neutron sources and heat generation. Alternatively, more precise cooling times may be obtained by linear interpolation of the cooling times between burnup levels, enrichment levels, or both.

Table 5.2-1 - Fuel Cooling Table W21-1-A

APPLICABILITY:

Canister:	FuelSolutions™ W21-M and W21-T Canisters
Loading Specification:	W21-1 and W21-2
Description:	Up to 21 fuel assemblies
SNF Assemblies:	Valid for the SNF assemblies listed in Table 2.2-1
Cobalt Range:	≤ 11 g in active fuel region (low-cobalt)

QUALIFICATION BASES:

Storage Cask Dose Rate	≤ 50 mrem/hr
Canister Heat Load	≤ 22.0 kW/Canister, and ≤ 0.161 kW/inch-Canister

Maximum Burnup (MWd/MTU)[1,3]	Required Minimum Cooling Time (yr.)[1,2]							
	Minimum Average Initial Enrichment (w/o ^{235}U)							
	1.5	2.0	2.5	3.0	3.5	4.0	4.5	5.0
15,000	3.3	3.3	3.2	3.2	3.2	3.1	3.1	3.1
20,000	3.7	3.6	3.5	3.5	3.4	3.4	3.4	3.4
25,000	4.0	3.9	3.8	3.7	3.7	3.6	3.6	3.6
30,000	4.9	4.6	4.4	4.2	4.1	4.0	3.9	3.8
32,000	5.2	5.0	4.8	4.6	4.4	4.2	4.1	4.0
34,000	5.5	5.3	5.0	4.8	4.6	4.5	4.3	4.2
36,000	5.9	5.6	5.4	5.1	5.0	4.8	4.6	4.5
38,000	6.4	5.9	5.7	5.5	5.3	5.1	4.9	4.8
40,000	7.1	6.5	6.0	5.7	5.5	5.4	5.2	5.0
42,000	8.0	7.4	6.9	6.4	6.0	5.8	5.6	5.5
44,000	9.1	8.1	7.5	7.0	6.6	6.2	5.9	5.8
46,000	NQ[4]	9.3	8.3	7.7	7.3	6.9	6.5	6.2
48,000	NQ	10.6	9.5	8.6	7.9	7.5	7.2	6.8
50,000	NQ	NQ	10.7	9.7	8.9	8.2	7.7	7.4
52,000	NQ	NQ	12.3	11.0	9.9	9.2	8.6	8.0
54,000	NQ	NQ	NQ	12.7	11.4	10.4	9.6	9.0
56,000	NQ	NQ	NQ	14.5	13.1	11.8	10.8	10.0
58,000	NQ	NQ	NQ	NQ	14.8	13.5	12.2	11.3
60,000	NQ	NQ	NQ	NQ	16.9	15.3	13.9	12.8

Notes:

(1) Rounding: round up to next highest burnup, round down to next lowest enrichment. Alternatively, more precise cooling times may be obtained by linear interpolation of the cooling time between listed burnup levels, enrichment levels, or both.

(2) Enrichments less than 1.5% or greater than the criticality limit presented in Section 6.1 of this FSAR are not qualified.

(3) Burnups greater than 60,000 MWd/MTU are not qualified for storage. Fuel less than 15,000 MWd/MTU is acceptable at or beyond the minimum cooling time indicated for 15,000 MWd/MTU.

(4) Not qualified for storage.

Table 5.2-2 - Fuel Cooling Table W21-1-B

APPLICABILITY:

Canister:	FuelSolutions™ W21-M and W21-T Canisters
Loading Specification:	W21-1 and W21-2
Description:	Up to 21 fuel assemblies
SNF Assemblies:	Valid for the SNF assemblies listed in Table 2.2-1
Cobalt Range:	≤ 50 g in active fuel region (high-cobalt)

QUALIFICATION BASES:

Storage Cask Dose Rate	≤ 50 mrem/hr
Canister Heat Load	≤ 22.0 kW/Canister, and ≤ 0.161 kW/inch-Canister

Maximum Burnup (MWd/MTU)[1,3]	Required Minimum Cooling Time (yr.) [1,2]							
	Minimum Average Initial Enrichment (w/o ^{235}U)							
	1.5	2.0	2.5	3.0	3.5	4.0	4.5	5.0
15,000	4.2	4.0	3.9	3.8	3.8	3.8	3.7	3.7
20,000	4.9	4.6	4.5	4.4	4.3	4.2	4.2	4.1
25,000	5.6	5.3	5.1	5.0	4.9	4.8	4.7	4.7
30,000	6.2	6.0	5.5	5.4	5.3	5.2	5.1	5.0
32,000	6.6	6.4	5.7	5.6	5.5	5.4	5.3	5.2
34,000	7.0	6.8	6.0	5.8	5.7	5.6	5.5	5.4
36,000	7.2	7.0	6.2	6.1	5.9	5.8	5.7	5.6
38,000	7.6	7.4	6.6	6.4	6.2	6.0	5.9	5.8
40,000	7.7	7.6	7.4	6.4	6.2	6.0	5.9	5.8
42,000	8.2	8.0	7.9	6.8	6.6	6.5	6.3	6.1
44,000	9.1	8.4	8.2	7.1	6.9	6.8	6.6	6.4
46,000	NQ[4]	9.3	8.3	7.7	7.3	6.9	6.7	6.5
48,000	NQ	10.6	9.5	8.6	7.9	7.5	7.2	6.8
50,000	NQ	NQ	10.7	9.7	8.9	8.2	7.7	7.4
52,000	NQ	NQ	12.3	11.0	9.9	9.2	8.6	8.0
54,000	NQ	NQ	NQ	12.7	11.4	10.4	9.6	9.0
56,000	NQ	NQ	NQ	14.5	13.1	11.8	10.8	10.0
58,000	NQ	NQ	NQ	NQ	14.8	13.5	12.2	11.3
60,000	NQ	NQ	NQ	NQ	16.9	15.3	13.9	12.8

Notes:

(1) Rounding: round up to next highest burnup, round down to next lowest enrichment. Alternatively, more precise cooling times may be obtained by linear interpolation of the cooling time between listed burnup levels, enrichment levels, or both.

(2) Enrichments less than 1.5% or greater than the criticality limit presented in Section 6.1 of this FSAR are not qualified.

(3) Burnups greater than 60,000 MWd/MTU are not qualified for storage. Fuel less than 15,000 MWd/MTU is acceptable at or beyond the minimum cooling time indicated for 15,000 MWd/MTU.

(4) Not qualified for storage.

Table 5.2-3 - Fuel Cooling Table W21-2-A

APPLICABILITY:

Canister:	FuelSolutions™ W21-M and W21-T Canisters
Loading Specification:	W21-2
Description:	Up to 20 fuel assemblies
SNF Assemblies:	Valid for the SNF assemblies listed in Table 2.2-1
Cobalt Range:	≤ 11 g in active fuel region (low-cobalt)

QUALIFICATION BASES:

Storage Cask Dose Rate	≤ 50 mrem/hr
Canister Heat Load	≤ 22.0 kW/Canister, and ≤ 0.161 kW/inch-Canister

Maximum Burnup (MWd/MTU)	**Required Minimum Cooling Time (yr.)**							
	Minimum Average Initial Enrichment (w/o ^{235}U)							
	1.5	2.0	2.5	3.0	3.5	4.0	4.5	5.0
15,000								
20,000								
25,000								
30,000								
32,000								
34,000								
36,000								
38,000								
40,000								
42,000								
44,000								
46,000								
48,000								
50,000								
52,000								
54,000								
56,000								
58,000								
60,000								

Note:

Since no credit is taken at this time for the reduced thermal and radiological source terms of loading specification W21-2, use the W21-1 fuel cooling tables.

Table 5.2-4 - Fuel Cooling Table W21-2-B

APPLICABILITY:

Canister:	FuelSolutions™ W21-M and W21-T Canisters
Loading Specification:	W21-2
Description:	Up to 20 fuel assemblies
SNF Assemblies:	Valid for the SNF assemblies listed in Table 2.2-1
Cobalt Range:	≤ 50 g in active fuel region (high-cobalt)

QUALIFICATION BASES:

Storage Cask Dose Rate	≤ 50 mrem/hr
Canister Heat Load	≤ 22.0 kW/Canister, and ≤ 0.161 kW/inch-Canister

Maximum Burnup (MWd/MTU)	Required Minimum Cooling Time (yr.)							
	Minimum Average Initial Enrichment (w/o ^{235}U)							
	1.5	2.0	2.5	3.0	3.5	4.0	4.5	5.0
15,000								
20,000								
25,000								
30,000								
32,000								
34,000								
36,000								
38,000								
40,000								
42,000								
44,000								
46,000								
48,000								
50,000								
52,000								
54,000								
56,000								
58,000								
60,000								

Note:

Since no credit is taken at this time for the reduced thermal and radiological source terms of loading specification W21-2, use the W21-1 fuel cooling tables.

Table 5.2-5 - Heat Load Criteria for Constructing the W21 Fuel Cooling Tables

	Bulk Heat Load (kW/canister)[1]	Linear Heat Load (kW/canister-inch)[1]
W100 Transfer Cask	28.0	0.253
W150 Storage Cask	28.0	0.253
W21 Canister	22.0	0.161
Criteria for W21 Fuel Cooling Tables[2]	**22.0**	**0.161**

Notes:

(1) Maximum heat loads for the W100 Transfer Cask and W150 Storage Cask are discussed in Chapter 4 of the FuelSolutions™ Storage System FSAR.

(2) The most limiting of the transfer cask/storage cask, and canister maximum heat loads are used as the thermal criteria for constructing fuel cooling tables.

Table 5.2-6 - Burnup-Specific Heat Load Factors

Cooling Table Burnup Interval (GWd/MT)	Maximum Peaking Factor(1)	Axial Derating Factor(2)	Assembly Hardware Factor(3)	ADSORB Derating Factor(4)
0-15	1.215	0.901	5.4%	0.852
15-20	1.182	0.926	5.4%	0.876
20-25	1.166	0.939	5.4%	0.888
25-30	1.149	0.953	5.4%	0.902
30-32	1.138	0.962	5.4%	0.910
32-34	1.131	0.968	4.2%	0.927
34-36	1.125	0.974	4.2%	0.933
36-38	1.118	0.980	4.2%	0.939
38-40	1.111	0.985	3.7%	0.949
40-42	1.103	0.990	3.7%	0.956
42-44	1.096	0.993	3.7%	0.962
44-46	1.090	1.000	3.7%	0.963
46-48	1.083	1.000	3.7%	0.963
48-60	1.077-1.045	1.000	3.2%	0.968

Notes:

(1) Maximum axial peaking factors for worst-case burnup profiles (DOE/RW-0495) were fit to PF = -0.0033·BU+1.240.

(2) The axial derating factor is equal to 1.095/PF where 1.095 is the peaking factor used for a 44 GWd/MT axial profile in the maximum heat load calculations. No credit is taken for axial derating factors less than one.

(3) Heat load contribution for non-UO_2 hardware vs. burnup expressed in percent of the total UO_2 heat load.

(4) The overall derating factor applied to bulk and linear maximum allowable heat loads for specific burnups in ADSORB. This effectively reduces the allowable heat load, thus increasing required cooling times, for the specific burnup range.

Table 5.2-7 - Burnup-Specific Gamma Factors

Cooling Table Burnup Interval (GWd/MT)	Maximum Peaking Factor(1)	ADSORB Gamma Factor(2,3)
0-15	1.215	1.215
15-20	1.182	1.182
20-25	1.166	1.166
25-30	1.149	1.149
30-32	1.138	1.138
32-34	1.131	1.131
34-36	1.125	1.125
36-38	1.118	1.118
38-40	1.111	1.111
40-42	1.103	1.103
42-44	1.096	1.096
44-46	1.090	1.090
46-48	1.083	1.083
48-50	1.077	1.077
50-52	1.072	1.072
52-54	1.065	1.065
54-56	1.059	1.059
56-58	1.052	1.052
58-60	1.045	1.045

Notes:

(1) Maximum axial peaking factors for worst-case burnup profiles (DOE/RW-0495) were fit to PF = -0.0033·BU+1.240.

(2) The gamma peaking factor is equal to the maximum axial peaking factor. The overall gamma factor is applied to the gamma source term in ADSORB for each burnup group. This increases the gamma dose rate, thus increasing required cooling times for the specific burnup range.

(3) The gamma source strengths are increased further to account for irradiated non-UO_2 hardware (including control components). BUGLE energy group 57 (1.0-1.5 MeV) is increased by an additional gamma source strength equal to 0%-7.2% of the total gamma source strength. The percentage varies with assembly burnup, enrichment, and cooling time. The calculation of the hardware source strength percentage is discussed in Section 5.5.3 of the FuelSolutions™ Storage System FSAR. The data that is entered into ADSORB to calculate these percentages is described in that FSAR section.

Table 5.2-8 - Burnup-Specific Neutron Factors

Cooling Table Burnup Interval (GWd/MT)	Maximum Peaking Factor(1)	Subcritical Neutron Mult. Factor(2)	ADSORB Neutron Factor(3)
0-15	1.215	1.5	3.269
15-20	1.182	1.5	2.928
20-25	1.166	1.5	2.773
25-30	1.149	1.5	2.614
30-32	1.138	1.5	2.516
32-34	1.131	1.5	2.454
34-36	1.125	1.5	2.403
36-38	1.118	1.5	2.343
38-40	1.111	1.5	2.285
40-42	1.103	1.5	2.220
42-44	1.096	1.5	2.164
44-46	1.090	1.5	2.117
46-48	1.083	1.5	2.064
48-50	1.077	1.5	2.018
50-52	1.072	1.5	1.981
52-54	1.065	1.5	1.930
54-56	1.059	1.5	1.887
56-58	1.052	1.5	1.837
58-60	1.045	1.5	1.789

Notes:

(1) Maximum axial peaking factors for worst-case burnup profiles (DOE/RW-0495) were fit to PF = -0.0033·BU+1.240.

(2) All subcritical multiplication factors are based on a dry, fresh fuel assumption which yields k_{eff}=0.33. No credit is taken for burnup. The subcritical multiplication factor for all burnup groups is therefore 1/(1-0.33) = 1.5.

(3) The neutron peaking factor is equal to the maximum axial peaking factor to the fourth power times the subcritical multiplication factor. The overall neutron factor is applied to the neutron source term in ADSORB for each burnup group. This increases the neutron dose rate, thus increasing required cooling times for the specific burnup range.

This page intentionally left blank.

5.3 Model Specification

5.3.1 Description of the Shielding Configuration

The storage cask adjoint models are intended to derive a set of importance functions by energy group which relate the radiological source term inside the canister to a dose rate on the outside of the storage cask. This is accomplished using an R-θ slice through the storage cask at the midplane of the active fuel (or location of source peak). This way, the azimuthal peak can be determined (i.e., the point along the circumference of the "slice" with the highest dose rate). Figure 5.3-1 shows a sketch of the radial shielding configuration, along with the dose point location and significant shield dimensions used for the analysis.

The major modeling choices that relate to the shielding configuration are summarized in Table 5.3-1. The model includes a W21 canister with SNF assemblies. The assemblies are modeled as a homogenized volume (shaped like the perimeter of the fuel storage cells), which includes the fuel assembly with the canister guide sleeves (Boral, tubes, and wrappers) and canister air. The material mixture is conservatively based on a maximum axial uranium loading and a minimum axial Zircaloy loading (fuel rod cladding and guide tubes) for PWR fuel assemblies. All other assembly hardware mass is conservatively neglected in the material mixture. The W21 canister spacer plates are conservatively neglected in the shielding models.

The canister shell is modeled as shown in Figure 5.3-1, but the storage cask thermal shield and rails are conservatively ignored. The storage cask steel liner and concrete are modeled as shown in Figure 5.3-1. Small voids in the W150 Storage Cask, such as the liner joint, thermocouple wells, and segment joints, are neglected in the model because they have a small area and have been designed with dogleg paths to reduce radiation streaming.

The mesh point selected for adjoint importance functions is selected on the basis of scoping "forward" runs. It is located on the surface of the storage cask directly off the corner assembly. The circumferential dose rate variation is about 25%. Thus, selecting the maximum dose point for adjoint fluxes introduces a small amount of conservatism in terms of the average storage cask dose rate.

For simplicity, the canister is modeled as being filled with air, as it is during canister closure. This has a negligible effect since the macroscopic cross sections for air and helium (the canister fill gas) are both extremely small.

These models are used only for generating adjoint importance functions used to create the fuel cooling tables. There are no accident conditions modeled using the storage cask adjoint cases.

5.3.2 Shield Regional Densities

Section 5.3 of the FuelSolutions™ Storage System FSAR describes several mixtures used throughout the FuelSolutions™ shielding analyses. The densities for these standard materials, such as concrete, stainless steel, carbon steel, etc. are used in the W21 canister adjoint model.

Two canister-unique mixtures are created for the W21 adjoint model: the W21 SNF cells, and the canister interstitial area outside those SNF cells. The assumptions for these mixtures are described above and in Table 5.3-1, and the regional densities are listed in Table 5.3-2.

Table 5.3-1 - FuelSolutions™ W21 Canister Adjoint Model Parameters

Parameter	Model	Comments
Model configuration	R-θ slice of W21 canister in a W150 Storage Cask	Suitable for desired adjoint importance functions
Canister type	Conservative representation of W21M and W21T classes	See interstitial gaps below. Shield plug design variations not important to R-θ model
Fuel cells	Homogenized worst-case PWR assembly (0.471 MTIHM over 144 inches), stainless steel guide tube, neutron poison, stainless steel wrapper	Selected high-MTIHM fuel design for conservatism
Interstitial gaps	No shielding credit taken for spacer plates	Conservative modeling assumption

Table 5.3-2 - FuelSolutions™ W21 Canister-Specific Regional Densities

Standard Material[1]	Volume Fraction
UO_2	0.1908
Zr-4/Zr-2	0.0587
SS-316	0.0278
Boral Core	0.0146
Boral Aluminum	0.0073
Air	0.7008

Notes:

(1) See Chapter 5 of the FuelSolutions™ Storage System FSAR for standard FuelSolutions™ materials.

Figure Withheld Under 10 CFR 2.390

Figure 5.3-1 - FuelSolutions™ W21 Canister Adjoint Model

5.4 Shielding Evaluation

5.4.1 W21 Canister Adjoint Calculation Methodology

An adjoint shielding model is used to obtain the importance functions for the FuelSolutions™ W21 canister. Chapter 5 of the FuelSolutions™ Storage System FSAR has a general description of the adjoint method and how the resulting importance functions are used in constructing the fuel cooling tables.

The key parameters for the W21 adjoint model are presented in Table 5.4-1.

There is no spatial source distribution, since this model is an adjoint calculation**.** The active fuel region is assumed to be uniform, with all fuel cells homogenized as shown in Figure 5.3-1. Because this is an R-θ slice through the canister and storage cask, there is no axial source distribution and the end fitting regions are not modeled.

5.4.2 W21 Canister Adjoint Calculation Results

Three tables summarize the results of the FuelSolutions™ W21 adjoint calculations, which are used to generate the fuel cooling tables and forward calculation representative dose rates for the W21 canister.

Table 5.4-2 shows the primary gamma adjoint importance function. These values represent the primary gamma ray dose rate, in mrem/hr at the side of the storage cask, which results from a one primary gamma ray per second per axial cm source term. To obtain the primary gamma dose rate at the storage cask surface, multiply each value in Table 5.4-2 by the appropriate primary gamma group source term, then sum.

Table 5.4-3 shows the secondary gamma adjoint importance function. These values represent the secondary gamma ray dose rate, in mrem/hr at the side of the storage cask, which results from a one neutron per second per axial cm source term. To obtain the secondary gamma dose rate at the storage cask surface, multiply each value in Table 5.4-3 by the appropriate neutron group source term, then sum.

Table 5.4-4 shows the neutron adjoint importance function. These values represent the neutron dose rate, in mrem/hr at the side of the storage cask, which results from a one neutron per second per axial cm source term. To obtain the neutron dose rate at the storage cask surface, multiply each value in Table 5.4-4 by the appropriate neutron group source term, then sum.

These importance functions are used as input to ADSORB to generate the W21 canister cooling tables.

Table 5.4-1 - Key W21 Canister Adjoint Model Parameters

Parameter	Value
Computer Code	DORT[1]
Method of Solution	Adjoint
Mesh	204 (radial) x 90 (azimuthal) Octant R-θ Model
Cross Section Library	BUGLE-93[1] (20g,47n coupled)
Order of Expansion	P_3
Quadrature	Fully symmetric S_{16}
Source Term	ANSI-ANS-6.1.1-1977 response factors
Flux-to-Dose Factors	N/A for adjoint run

Notes:

(1) See Section 5.5 of the FuelSolutions™ Storage System FSAR for descriptions of the computer codes and cross section libraries.

Table 5.4-2 - FuelSolutions™ W21 Canister Primary Gamma Adjoint Importance Functions

BUGLE Group	Average Energy (MeV)	mrem/hr per source particle/s-cm[1]
48	12.000	2.354E-09
49	9.000	1.886E-09
50	7.500	1.538E-09
51	6.500	1.144E-09
52	5.500	8.378E-10
53	4.500	5.066E-10
54	3.500	2.313E-10
55	2.500	5.559E-11
56	1.750	1.012E-11
57	1.250	1.412E-12
58	0.900	1.103E-13
59	0.750	2.355E-14
60	0.650	7.571E-15
61	0.500	1.344E-15
62	0.300	1.430E-17
63	0.150	1.421E-20
64	0.080	6.420E-21
65	0.045	1.794E-21
66	0.025	8.595E-22
67	0.015	1.493E-21

Notes:

(1) Importance function units are mrem/hr primary gamma at the surface of the W150 Storage Cask per gamma/s-cm, where cm refers to the active fuel length.

Table 5.4-3 - FuelSolutions™ W21 Canister Secondary Gamma Adjoint Importance Functions

BUGLE Group	Average Energy (MeV)	mrem/hr per source particle/s-cm[1]	BUGLE Group	Average Energy (MeV)	mrem/hr per source particle/s-cm[(1)]
1	1.576E+01	2.562E-08	25	2.402E-01	1.096E-08
2	1.320E+01	2.282E-08	26	1.471E-01	9.730E-09
3	1.111E+01	2.055E-08	27	8.924E-02	8.299E-09
4	9.304E+00	1.946E-08	28	5.412E-02	7.142E-09
5	8.008E+00	1.849E-08	29	3.635E-02	6.246E-09
6	6.737E+00	1.745E-08	30	2.894E-02	5.926E-09
7	5.516E+00	1.725E-08	31	2.512E-02	5.985E-09
8	4.322E+00	1.623E-08	32	2.303E-02	5.571E-09
9	3.345E+00	1.603E-08	33	1.845E-02	4.800E-09
10	2.869E+00	1.642E-08	34	1.107E-02	3.785E-09
11	2.596E+00	1.603E-08	35	5.228E-03	3.060E-09
12	2.416E+00	1.620E-08	36	2.470E-03	2.595E-09
13	2.356E+00	1.655E-08	37	1.019E-03	2.096E-09
14	2.289E+00	1.560E-08	38	3.342E-04	1.542E-09
15	2.076E+00	1.487E-08	39	1.579E-04	1.331E-09
16	1.787E+00	1.459E-08	40	6.928E-05	1.156E-09
17	1.503E+00	1.444E-08	41	2.397E-05	7.898E-10
18	1.178E+00	1.449E-08	42	7.860E-06	4.996E-10
19	9.117E-01	1.465E-08	43	3.450E-06	7.101E-10
20	7.818E-01	1.446E-08	44	1.366E-06	5.349E-10
21	6.754E-01	1.413E-08	45	6.452E-07	4.094E-10
22	5.530E-01	1.302E-08	46	2.570E-07	2.750E-10
23	4.334E-01	1.198E-08	47	5.001E-08	1.439E-10
24	3.330E-01	1.162E-08			

Notes:

(1) Importance function units are mrem/hr secondary gamma at the surface of the W150 Storage Cask per neutron/s-cm, where cm refers to the active fuel length.

Table 5.4-4 - FuelSolutions™ W21 Canister Neutron Adjoint Importance Functions

BUGLE Group	Average Energy (MeV)	mrem/hr per source particle/s-cm[1]	BUGLE Group	Average Energy (MeV)	mrem/hr per source particle/s-cm[1]
1	1.576E+01	8.289E-08	25	2.402E-01	1.702E-11
2	1.320E+01	5.899E-08	26	1.471E-01	1.227E-11
3	1.111E+01	4.585E-08	27	8.924E-02	7.628E-12
4	9.304E+00	4.497E-08	28	5.412E-02	5.185E-12
5	8.008E+00	4.378E-08	29	3.635E-02	3.814E-12
6	6.737E+00	5.024E-08	30	2.894E-02	3.478E-12
7	5.516E+00	3.200E-08	31	2.512E-02	3.522E-12
8	4.322E+00	1.554E-08	32	2.303E-02	3.077E-12
9	3.345E+00	9.210E-09	33	1.845E-02	2.322E-12
10	2.869E+00	1.033E-08	34	1.107E-02	1.449E-12
11	2.596E+00	7.993E-09	35	5.228E-03	9.158E-13
12	2.416E+00	9.594E-09	36	2.470E-03	6.037E-13
13	2.356E+00	1.220E-08	37	1.019E-03	3.745E-13
14	2.289E+00	4.537E-09	38	3.342E-04	1.609E-13
15	2.076E+00	1.068E-09	39	1.579E-04	1.041E-13
16	1.787E+00	3.932E-10	40	6.928E-05	6.448E-13
17	1.503E+00	1.851E-10	41	2.397E-05	2.610E-14
18	1.178E+00	9.179E-11	42	7.860E-06	7.273E-15
19	9.117E-01	7.497E-11	43	3.450E-06	6.979E-15
20	7.818E-01	6.559E-11	44	1.366E-06	2.448E-15
21	6.754E-01	5.646E-11	45	6.452E-07	7.632E-16
22	5.530E-01	3.359E-11	46	2.570E-07	1.927E-16
23	4.334E-01	2.271E-11	47	5.001E-08	2.538E-18
24	3.330E-01	2.051E-11			

Notes:

(1) Importance function units are mrem/hr neutron at the surface of the W150 Storage Cask per neutron/s-cm, where cm refers to the active fuel length.

This page intentionally left blank.

5.5 Supplemental Data

Supplemental data used for the FuelSolutions™ W21 canister shielding evaluation, such as flux-to-dose conversion factors and descriptions of computer codes, are described Chapter 5 of the FuelSolutions™ Storage System FSAR.

5.5.1 Fuel Cooling Table Domains

The following tables provide general information for the cooling tables. They indicate whether heat (“Q”) or radiological dose (“D”) controls the required cooling time for each state point in the cooling tables.

Table 5.5-1 - Fuel Cooling Table W21-1-A Domains[1,2]

Maximum Burnup (MWd/MTU)	Required Minimum Cooling Time (yr.)							
	Minimum Average Initial Enrichment (w/o ^{235}U)							
	1.5	2.0	2.5	3.0	3.5	4.0	4.5	5.0
15,000	D	D	D	D	D	D	D	D
20,000	D	D	D	D	D	D	D	D
25,000	Q	Q	D	D	D	D	D	D
30,000	Q	Q	Q	Q	Q	Q	Q	Q
32,000	Q	Q	Q	Q	Q	Q	Q	Q
34,000	Q	Q	Q	Q	Q	Q	Q	Q
36,000	Q	Q	Q	Q	Q	Q	Q	Q
38,000	Q	Q	Q	Q	Q	Q	Q	Q
40,000	Q	Q	Q	Q	Q	Q	Q	Q
42,000	Q	Q	Q	Q	Q	Q	Q	Q
44,000	Q	Q	Q	Q	Q	Q	Q	Q
46,000	Q	Q	Q	Q	Q	Q	Q	Q
48,000	Q	Q	Q	Q	Q	Q	Q	Q
50,000	Q	Q	Q	Q	Q	Q	Q	Q
52,000	Q	Q	Q	Q	Q	Q	Q	Q
54,000	Q	Q	Q	Q	Q	Q	Q	Q
56,000	Q	Q	Q	Q	Q	Q	Q	Q
58,000	Q	Q	Q	Q	Q	Q	Q	Q
60,000	Q	Q	Q	Q	Q	Q	Q	Q

Notes:

(1) "Q" indicates that the state point is controlled by heat generation. "D" indicates that the state point is controlled by radiological dose.

(2) Also applies to Fuel Cooling Table W21-2-A.

Table 5.5-2 - Fuel Cooling Table W21-1-B Domains[1,2]

Maximum Burnup (MWd/MTU)	Required Minimum Cooling Time (yr.)							
	Minimum Average Initial Enrichment (w/o ^{235}U)							
	1.5	2.0	2.5	3.0	3.5	4.0	4.5	5.0
15,000	D	D	D	D	D	D	D	D
20,000	D	D	D	D	D	D	D	D
25,000	D	D	D	D	D	D	D	D
30,000	D	D	D	D	D	D	D	D
32,000	D	D	D	D	D	D	D	D
34,000	D	D	D	D	D	D	D	D
36,000	D	D	D	D	D	D	D	D
38,000	D	D	D	D	D	D	D	D
40,000	D	D	D	D	D	D	D	D
42,000	D	D	D	D	D	D	D	D
44,000	Q	D	D	D	D	D	D	D
46,000	Q	Q	Q	Q	Q	Q	D	D
48,000	Q	Q	Q	Q	Q	Q	Q	Q
50,000	Q	Q	Q	Q	Q	Q	Q	Q
52,000	Q	Q	Q	Q	Q	Q	Q	Q
54,000	Q	Q	Q	Q	Q	Q	Q	Q
56,000	Q	Q	Q	Q	Q	Q	Q	Q
58,000	Q	Q	Q	Q	Q	Q	Q	Q
60,000	Q	Q	Q	Q	Q	Q	Q	Q

Notes:

(1) "Q" indicates that the state point is controlled by heat generation. "D" indicates that the state point is controlled by radiological dose.

(2) Also applies to Fuel Cooling Table W21-2-B.

This page intentionally left blank.

6. CRITICALITY EVALUATION

This chapter presents criticality evaluations that demonstrate the FuelSolutions™ W21 canister meets the criticality safety requirements of 10CFR72[1] and is acceptable for use as an integral part of the FuelSolutions™ SFMS. The FuelSolutions™ W21 canister satisfies the criticality safety acceptance criteria stated in Chapter 6 of the FuelSolutions™ Storage System FSAR.[2] The criticality evaluation presented in this chapter demonstrates the following:

- The effective neutron multiplication factor (k_{eff}), including all biases and uncertainties at a 95% confidence level, does not exceed 0.95 under all credible normal, off-normal, and accident conditions.
- At least two unlikely, independent, and concurrent or sequential changes in the conditions essential to nuclear criticality safety are necessary before an accidental criticality is deemed possible.

In addition to presenting the evaluations necessary to demonstrate that the criticality safety criteria are satisfied, this chapter describes FuelSolutions™ W21 canister criticality control design features, specifies limiting fuel characteristics, and documents the criticality design analysis method validation. The general approach used to perform the criticality safety evaluation for the FuelSolutions™ W21 canister is described in Chapter 6 of the FuelSolutions™ Storage System FSAR.

[1] Title 10, Code of Federal Regulations, Part 72 (10CFR72), *Licensing Requirements for the Independent Storage of Spent Nuclear Fuel and High Level Radioactive Waste*. U.S. Nuclear Regulatory Commission, 1995.

[2] WSNF-220, *FuelSolutions™ Storage System Final Safety Analysis Report*, NRC Docket No. 72-1026, BNG Fuel Solutions.

This page intentionally left blank.

6.1 Discussion and Results

The FuelSolutions™ W21 canister design is established on the basis of both favorable geometry and permanent fixed neutron absorber materials (poison). The criticality evaluation credits only 75% of the minimum assured boron content and the continued efficacy of fixed neutron absorber materials is demonstrated. The criticality acceptance criteria are demonstrated to be satisfied for the range of fuel assembly classes defined in Section 2.2 of this FSAR without reliance on credit for fuel burnup or fuel-related burnable neutron absorbers.

The criticality evaluation includes analyses for fuel assembly types grouped into fuel assembly classes according to physical characteristics important to criticality. For assembly types within a given assembly class, most physical parameters are the same. Some parameters, however, vary over a limited range for assemblies within a given class. A bounding assembly configuration is defined for each assembly class which has the most limiting values for each variable assembly parameter. Maximum allowable enrichments for each assembly class are calculated based upon this bounding assembly configuration. Additional analyses which verify that specific assembly types within a given class are less reactive than the bounding assembly configuration defined for that class are also performed.

Each of the assembly physical parameters that are important to criticality are specified for each assembly class in the fuel specifications given in Table 6.1-1, based upon the bounding assembly configuration defined for that class. For parameters that vary for assemblies within the class, the bounding case values are specified as maximum or minimum allowable values in the fuel specification, depending on whether decreasing or increasing the parameter value increases reactivity. Any fuel assembly that meets the fuel parameter specifications for a given assembly class may be loaded into the FuelSolutions™ W21 canister, as long as its enrichment is below the maximum allowable value specified for that assembly class. This includes, but is not limited to, all the specific assembly types that are explicitly shown by analysis to be less reactive than the defined bounding assembly configuration for their assembly class. A list of specific assembly types that fall into each defined criticality class shown in Table 6.1-1 is provided in the fuel specifications given in Section 2.2 of this FSAR.

The maximum allowable enrichment levels shown for each assembly class in Table 6.1-1 are derived from calculations that demonstrate the highest calculated k_{eff} that might occur under any loading condition involving loading, closure, transfer, or on-site dry storage; and that satisfies the $k_{eff} \leq 0.95$ acceptance criteria for criticality. Maximum allowable enrichment levels are calculated for the two FuelSolutions™ W21 canister loading specifications defined in the *technical specification* contained in Section 12.3 of this FSAR: W21-1, loading of up to 21 intact assemblies; and W21-2 partial loading of up to 20 intact assemblies with an empty guide tube in the central location (shown in Figure 6.3-4). The W21-2 canister configuration employs a mechanical block-out over the opening of the central guide tube in order to prevent inadvertent loading of assemblies into that location.

Table 6.1-1 - W21 Canister Fuel Specification by PWR Assembly Class (2 Pages)

Fuel Assembly Class	B&W 15x15	B&W 17x17	CE 14x14	CE 14x14 A	CE 15x15 P	15x16	15x16 A
Clad Material	Zr	Zr	Zr	Zr	Zr	Zr	Zr
W21-1 Initial Enrichment (w/o ^{235}U)(1,2)	≤ 4.70	≤ 4.60	≤ 5.00	≤ 5.00	≤ 5.00	≤ 5.00	≤ 5.00
W21-2 Initial Enrichment (w/o ^{235}U)(1,3)	≤ 5.00	≤ 4.90	≤ 5.00	≤ 5.00	≤ 5.00	≤ 5.00	≤ 5.00
Pellet Stack UO_2 Density(4)	≤ 96.5 %	≤ 96.5 %	≤ 96.5 %	≤ 96.5 %	≤ 97.5 %	≤ 96.5 %	≤ 96.5 %
Number of Fuel Rods	208	264	176	176	208 - 216	231	237
Clad O.D. (in)	≥ 0.430	≥ 0.377	≥ 0.440	≥ 0.440	≥ 0.4135	≥ 0.365	≥ 0.365
Clad Thickness (in)	≥ 0.0265	≥ 0.022	≥ 0.026	≥ 0.026	≥ 0.024	≥ 0.024	≥ 0.024
Pellet Diameter (in)	≥ 0.3675	≥ 0.3232	≥ 0.370	≥ 0.3795	≥ 0.350	≥ 0.3105	≥ 0.3105
Fuel Rod Pitch (in)	0.568	0.502	0.58	0.568	0.55	0.472	0.468
Active Fuel Length (in)(4)	≤ 150	≤ 150	≤ 150	≤ 150	≤ 150	≤ 150	≤ 150
Number of Guide / Instrument Tube Locations(5)	17	25	5(6)	5(6)	1 - 9	1	1
Bottom Nozzle Height (in)(4)	≥ 1.97	≥ 1.97	≥ 1.97	≥ 1.97	≥ 1.97	≥ 1.97	≥ 1.97

Table 6.1-1 - W21 Canister Fuel Specification by PWR Assembly Class (2 Pages)

Fuel Assembly Class	CE 16x16	W 14x14	W 15x15	W 15x15 A	W 17x17	W 17x17 A	W 17x17 B
Clad Material	Zr	Zr	Zr	Zr	Zr	Zr	Zr
W21-1 Initial Enrichment (w/o ^{235}U)(1,2)	≤ 5.00	≤ 5.00	≤ 4.70	≤ 4.90	≤ 4.70	≤ 4.60	≤ 4.60
W21-2 Initial Enrichment (w/o ^{235}U)(1,3)	≤ 5.00	≤ 5.00	≤ 5.00	≤ 5.00	≤ 5.00	≤ 4.90	≤ 4.90
Pellet Stack UO_2 Density(4)	≤ 96.5 %	≤ 96.5 %	≤ 96.5 %	≤ 96.5 %	≤ 96.5 %	≤ 96.5 %	≤ 96.5 %
Number of Fuel Rods	236	179	204	204	264	264	264
Clad O.D. (in)	≥ 0.382	≥ 0.400	≥ 0.420	≥ 0.424	≥ 0.374	≥ 0.360	≥ 0.360
Clad Thickness (in)	≥ 0.025	≥ 0.0243	≥ 0.024	≥ 0.030	≥ 0.0225	≥ 0.0225	≥ 0.025
Pellet Diameter (in)	≥ 0.325	≥ 0.3444	≥ 0.3659	≥ 0.3565	≥ 0.3195	≥ 0.3088	≥ 0.303
Fuel Rod Pitch (in)	0.506	0.556	0.563	0.563	0.496	0.496	0.496
Active Fuel Length (in)(4)	≤ 150	≤ 150	≤ 150	≤ 150	≤ 150	≤ 150	≤ 150
Number of Guide / Instrument Tube Locations(5)	5(6)	17	21	21	25	25	25
Bottom Nozzle Height (in)(4)	≥ 1.97	≥ 1.97	≥ 1.97	≥ 1.97	≥ 1.97	≥ 1.97	≥ 1.97

Table 6.1-1 Notes:

(1) The maximum allowable enrichments apply for all assemblies that meet the specified physical parameter requirements for the defined assembly class. The maximum allowable enrichments are defined as the maximum planar average enrichment at any axial assembly location. An exception is the CE 15x15 P assembly class, for which the maximum allowable enrichment applies to each individual fuel pin within the assembly.

(2) Loading Specification W-21-1 is up to 21 SNF assemblies.

(3) Loading Specification W-21-2 is up to 20 SNF assemblies with the center location empty.

(4) For these parameters, bounding values (for all PWR fuel) are conservatively assumed for all assembly types in the criticality analyses.

(5) The guide (and instrument) tubes displace water and reduce assembly reactivity. The criticality analyses conservatively neglect the presence of the guide tubes, and model water filled spaces in the guide tube locations. Therefore, whereas the number of guide tube locations is a specified parameter, the materials and dimensions of the guide tubes are not specified, since any quantity of steel or zircaloy in the guide tube locations will reduce assembly reactivity.

(6) The CE 14x14 and CE 16x16 assembly guide tubes occupy four fuel rod locations within the assembly array.

This page intentionally left blank.

6.2 Spent Fuel Loading

As discussed in Section 6.1, criticality analyses are performed to verify that the specific assembly types within each defined assembly class are less reactive than the bounding assembly configuration defined and analyzed for that class. This criticality evaluation includes all of the specific fuel assembly types described in Table 6.2-1. Table 6.2-1 also specifies which assembly class each specific assembly type falls into.

Both the bounding and specific fuel assembly configurations are analyzed as unirradiated fuel at the maximum enrichment listed (for each assembly class) in Table 6.1-1, and for each fuel loading specification (i.e., full loading vs. partial loading). All fuel pins are modeled assuming a uniform enrichment applied over the entire length of each fuel stack. The fuel is assumed to be undamaged. The maximum uranium loading is not used directly in the criticality analysis, which instead assumes SNF assemblies have an average nominal density of 96.5% theoretical density for UO_2 and the pellet geometry shown in Table 6.1-1 (and in Table 6.2-1 for the other specific assembly types). This UO_2 density is bounding for all PWR fuel assembly types, and it is specified as a maximum allowable density for all assembly classes in Table 6.1-1. Also, the criticality analyses are based upon an upper bounding active fuel length of 150 inches for all assembly types. Based upon these assumptions, the resulting overall uranium loadings that are modeled for each assembly type are bounding for those assembly types. Furthermore, no credit is taken for fuel pellet dishing fractions, and no credit is taken for fuel burnup or fuel-related burnable neutron absorbers.

The maximum allowable enrichment levels presented in Table 6.1-1 are defined as the maximum planar average (over the fuel lattice) enrichment that occurs for any axial assembly location. Only one PWR assembly type, the CE 15x15 Palisades assembly, has multiple pin enrichments. For this assembly type, the maximum allowable enrichment value shown in Table 6.1-1 is applied to each individual fuel pin.

Table 6.2-1 - Specific Fuel Assembly Type Parameters (3 Pages)

Fuel Assembly Type	Assembly Class	Fuel Rods Per Assembly	Fuel Rod Pitch (inches)	Fuel Pellet O.D. (inches)	Fuel Rod O.D. (inches)	Clad Thickness (inches)	Active Fuel Length (inches)	Bottom Nozzle Ht. (inches)
B&W 15x15 Mark B & B2	B&W 15x15	208	0.568	0.3700	0.430	0.0265	144	2.00
B&W 15x15 Mark B3, B4Z, B5, B5Z, & B6 - B8	B&W 15x15	208	0.568	0.3686	0.430	0.0265	144	2.00
B&W 15x15 Mark B4	B&W 15x15	208	0.568	0.3675	0.430	0.0265	144	2.00
B&W 17x17 Mark C	B&W 17x17	264	0.502	0.3232	0.377	0.022	143	1.97
CE 14x14	CE 14x14	176	0.580	0.3795	0.440	0.026	136.7/150	3.625
CE 14x14 Fort Calhoun	CE 14x14	176	0.580	0.3765	0.440	0.026	128	3.17
CE 14x14 Maine Yankee	CE 14x14	176	0.580	0.3759	0.440	0.026	136.7	3.625
CE 14x14 Westinghouse	CE 14x14	176	0.580	0.3805	0.440	0.026	136.7	2.75
CE 14x14 ANF	CE 14x14	176	0.580	0.3700	0.440	0.031	127.99	2.68
CE 14x14 St. Lucie 1	CE 14x14 A	176	0.568	0.3795	0.440	0.026	136.7	3.625
CE Palisades Versions ABC	CE 15x15	208-216	0.550	0.359	0.4135	0.024	131.8	2.4
CE Palisades Version D	CE 15x15	208-216	0.550	0.358	0.4175	0.026	131.8	2.4
CE Palisades Versions EFG	CE 15x15	208-216	0.550	0.3505	0.4150	0.0285	131.8	2.4

Table 6.2-1 - Specific Fuel Assembly Type Parameters (3 Pages)

Fuel Assembly Type	Assembly Class	Fuel Rods Per Assembly	Fuel Rod Pitch (inches)	Fuel Pellet O.D. (inches)	Fuel Rod O.D. (inches)	Clad Thickness (inches)	Active Fuel Length (inches)	Bottom Nozzle Ht. (inches)
CE Palisades Versions HIJK	CE 15x15	208-216	0.550	0.350	0.4170	0.0295	131.8	2.4
CE Palisades Version L	CE 15x15	208-216	0.550	0.3505	0.4170	0.0295	131.8	2.4
CE Palisades Versions M to Q	CE 15x15	208-216	0.550	0.351	0.4170	0.0295	131.8	2.4
CE Palisades Version R	CE 15x15	216	0.550	0.360	0.4170	0.0250	131.8	2.4
CE 15x16 Yankee Rowe	CE 15x16	231	0.472	0.3105	0.3691	0.026	91	7.19
ANF 15x16 Yankee Rowe	CE 15x16	231	0.472	0.3105	0.365	0.024	91	7.44
UNC 15x16 Yankee Rowe	CE 15x16 A	237	0.468	0.3105	0.365	0.024	91	7.19
CE 16x16 & System 80	CE 16x16	236	0.5063	0.3250	0.382	0.025	150	3.81/4.31
CE 16x16 St. Lucie 2	CE 16x16	236	0.5063	0.3250	0.382	0.025	136.7	3.81
Westinghouse 14x14 OFA	W 14x14	179	0.556	0.3444	0.400	0.0243	144	2.74
Westinghouse 14x14 STD/LOPAR	W 14x14	179	0.556	0.3659	0.422	0.0243	144	2.74
Westinghouse 14x14 B&W	W 14x14	179	0.556	0.3565	0.426	0.031	144	not avail.
Westinghouse 14x14 ANF	W 14x14	179	0.556	0.3505	0.417	0.0295	144	not avail.
Westinghouse 14x14 with 8” annular axial blankets	W14x14 Annular	179	0.556	0.3444	0.400	0.0243	144	2.74

Table 6.2-1 - Specific Fuel Assembly Type Parameters (3 Pages)

Fuel Assembly Type	Assembly Class	Fuel Rods Per Assembly	Fuel Rod Pitch (inches)	Fuel Pellet O.D. (inches)	Fuel Rod O.D. (inches)	Clad Thickness (inches)	Active Fuel Length (inches)	Bottom Nozzle Ht. (inches)
Westinghouse 15x15 OFA	W 15x15	204	0.563	0.3659	0.422	0.0243	144	2.74
Westinghouse 15x15 STD/LOPAR	W 15x15	204	0.563	0.3659	0.422	0.0243	144	2.74
Westinghouse 15x15 B&W	W 15x15	204	0.563	0.3671	0.420	0.0240	144	not avail.
Westinghouse 15x15 ANF	W 15x15 A	204	0.563	0.3565	0.424	0.030	144	not avail.
Westinghouse 15x15 with 8” annular axial blankets	W 15x15 Annular	204	0.563	0.3659	0.422	0.0243	144	2.74
Westinghouse 17x17 OFA	W 17x17 A	264	0.496	0.3088	0.360	0.0225	144	2.383
Westinghouse 17x17 STD/LOPAR	W 17x17	264	0.496	0.3225	0.374	0.0225	144	2.383
Westinghouse 17x17 B&W	W 17x17	264	0.496	0.3195	0.374	0.0240	144	not avail.
Westinghouse 17x17 ANF	W 17x17 B	264	0.496	0.3030	0.360	0.0250	144	not avail.
Westinghouse 17x17 with 8” annular axial blankets	W 17x17 Annular	264	0.496	0.3088	0.360	0.0225	144	2.383

6.3 Model Specification

6.3.1 Configuration

Models used in the criticality analysis include cases for normal and postulated accident conditions applicable to the FuelSolutions™ SFMS. The normal condition models are applicable for off-normal conditions of storage. The FuelSolutions™ W21 canister includes a basket assembly and a shell assembly, as described in Section 1.2.1.3 of this FSAR. Drawings for the FuelSolutions™ W21 canister are provided in Section 1.5.1 of this FSAR. Separate overpack casks are used for on-site transfer, and dry storage, as described in Chapter 1 of the FuelSolutions™ Storage System FSAR.

The FuelSolutions™ W21 canister basket consists of an array of guide tube assemblies, support rods, and spacer plates arranged in a manner to provide structural integrity and to prevent criticality of the stored fuel assemblies. The FuelSolutions™ W21 basket cross-section is depicted in Figure 6.3-1 with nominal dimensions provided. Figure 6.3-1 is a top view of the basket that has been sliced horizontally through an axial point to include one of the spacer plates. The spacer plates provide a minimum separation for the guide tube assemblies which are shown in Figure 6.3-2.

The FuelSolutions™ W21 canister contains 21 guide tube assemblies which allow for storage of up to 21 fuel assemblies if the canister is fully loaded. Figure 6.3-2 shows a top view of the guide tube assembly which incorporates BORAL® neutron absorber panels in sealed cavities surrounding the four guide tube faces. The BORAL® neutron absorber panels contain boron which has a large thermal neutron cross-section for absorption. The geometric arrangement of the guide tube assemblies within the FuelSolutions™ W21 canister forms a water gap between the neutron absorber panels of adjacent guide tubes. The water gaps, known as “flux traps,” allow neutrons that escape from the fuel region of one guide tube to be thermalized in the water gap and absorbed by the BORAL® neutron absorber panel of the adjacent guide tube, thereby significantly inhibiting neutron interaction between adjacent fuel assemblies. Additional product information for BORAL® is provided in Section 1.5.2 of this FSAR.

Both FuelSolutions™ W21M and W21T canister basket and shell assembly types are considered. The two designs differ with respect to the materials used for the support rods, vent/drain port covers, outer closure plates, inner closure plates, cylindrical shell, and spacer plates. There are also six basket configurations which are used in accommodating the range of candidate fuel assembly physical dimensions. The six basket configurations differ with respect to overall length; spacer plate location; guide tube and neutron absorber panel length; and support rod sleeve length. The effects that variations in design features among the FuelSolutions™ W21 versions have on criticality control effectiveness are evaluated in Section 6.4. Based on the evaluation in Section 6.4, the FuelSolutions™ W21M configuration is modeled in subsequent design basis criticality calculations.

The detailed analyses presented in Section 6.4 are based on models of an infinite array of FuelSolutions™ W21M basket and shell assemblies contained within representative transportation cask geometries. The FuelSolutions™ W21 canister cylindrical shell assembly and the modeled transportation cask geometry are shown in Figure 6.3-3. The modeled configuration

represents a worst-case configuration for any mode of canister use. The worst-case nature of the modeled configuration relative to storage and transfer configurations is discussed further in Section 6.6 of the FuelSolutions™ Storage System FSAR. Also, a criticality analysis of the W21 canister inside the FuelSolutions™ W100 transfer cask is performed to verify that the transfer cask configuration is no more reactive than the transportation cask configuration shown in Figure 6.3-3. The results of this analysis are described in Section 6.4.2.1.1.4 of this FSAR. The transfer cask radial shielding configuration is shown in Figure 6.3-10.

Criticality of fuel assemblies in the FuelSolutions™ W21 canister is prevented by the mechanical design of the canister. Neutronic interaction between fuel assemblies is limited by favorable geometry (fixing the minimum separation between fuel assemblies) and the use of borated neutron absorber panels. The design basis for criticality prevention is to demonstrate that the effective neutron multiplication factor of the fuel assemblies within the FuelSolutions™ canister is less than the Upper Subcritical Limit (USL) established using the analysis methodology presented in NUREG/CR-5661[3] and a diverse set of criticality experiments (see Section 6.5).

Both normal conditions and the hypothetical accident condition are considered in the criticality analysis for the FuelSolutions™ W21 canister. The normal condition analyses for the FuelSolutions™ W21 canister conservatively include: complete flooding with water at a density that results in optimum moderation, worst case asymmetric assembly placement within the guide tubes, and application of worst case material and fabrication tolerances. The hypothetical accident condition analyses for the FuelSolutions™ W21 canister include all the normal conditions, plus a bounding 0.08-inch permanent deformation of the guide tubes resulting from the hypothetical drop accident, axial detachment of the guide tubes from the basket structure, and removal of the neutron shield assembly of the transportation cask modeled around the canister. The deformation and detachment of the guide tubes, and the loss of the cask neutron shield assembly are consistent with the physical conditions expected to occur after being subjected to the worst case hypothetical accident conditions defined for transportation in 10CFR71.[4] Although the 10CFR71 hypothetical accident condition deformation assumptions are not applicable to FuelSolutions™ SFMS storage and on-site transfer configurations, they represent bounding assumptions for the canister which is also designed for transportation conditions under 10CFR71.

The MCNP 4a code package[5] is used for the criticality analysis of the FuelSolutions™ W21 canister to demonstrate that the storage of any of the specific fuel assembly types identified in Table 6.2-1, and all of the bounding assembly configurations defined for each assembly class in Table 6.1-1, satisfies the USL acceptance criterion. MCNP models are developed for the FuelSolutions™ W21 canister under normal and hypothetical accident conditions. The FuelSolutions™ W21 canister analytical models used include single-package models, and a

---

[3] NUREG/CR-5661, *Recommendations for Preparing the Criticality Safety Evaluation of Transportation Packages*, Dyer, H. R., and Parks, C. V., ORNL, April 1997.

[4] Title 10, Code of Federal Regulations, Part 71 (10CFR71), *Packaging and Transportation of Radioactive Material*, U.S. Nuclear Regulatory Commission, 1995.

[5] Briesmeister, J., *MCNP-4A General Monte Carlo Code N-Particle Transport Code Version 4A*, LA-12625-M, November 1993.

worst-case multiple package array model. The worst-case multiple package array model is conservatively used to establish the maximum acceptable enrichment and corresponding design basis k_{eff} value for each fuel assembly configuration identified in Table 6.1-1 and Table 6.2-1. As discussed in Section 6.6 of the FuelSolutions™ Storage System FSAR, the infinite cask array analysis, which is performed considering internal and interspersed optimum moderation, bounds all credible multiple storage cask array configurations.

The following assumptions are used to develop the analytical models for the criticality safety analysis of the FuelSolutions™ W21 canister:

- FuelSolutions™ W21 canister models are analyzed for the representative bounding fuel types identified and described in Table 6.1-1. All fuel assemblies contain uranium dioxide at a uniform pin enrichment corresponding to the values presented in Table 6.1-1 for each respective fuel assembly class. The enrichments are applied over the entire length of each fuel stack, and the fuel is assumed to be undamaged.
- The fuel pellets are conservatively modeled assuming a bounding density based on no dishing fraction.
- Unirradiated fuel conditions are assumed (fresh fuel isotopic concentrations). No credit is taken for any ^{234}U or ^{236}U in the fuel, nor is any credit taken for the buildup of fission product poison material.
- No credit is taken for any spacer grids, spacer sleeves, or top and bottom end fittings. In addition, the top and bottom end fittings are manufactured from stainless steel 304 which would remove neutrons by radiative capture.
- No credit is taken for any burnable absorber in the fuel rods.
- Fully flooded conditions are assumed, including water present in the fuel rod-cladding gap. The fully flooded conditions are the most conservative since the FuelSolutions™ W21 canister is an under-moderated system. The moderator is assumed to be pure water at a temperature of 20°C. A value of 1.0 g/cm^3 is used for the density of water since it is shown to produce the more reactive conditions (see the Section 6.4.2.1.1 case studies for further discussion).
- A ^{10}B areal density of 0.02 gm/cm^2 is used for the BORAL® neutron absorber panels which corresponds to the minimum specified boron concentration verified when the material is manufactured. Credit is taken for only 75% of the boron in the BORAL®.
- Worst case material and fabrication tolerance dimensions are applied to the nominal dimensions for the FuelSolutions™ W21 canister model. The tolerances are summarized in Table 6.3-1.
- Full and partial loading configurations for the FuelSolutions™ W21 canister are analyzed. The partial loading configuration is shown in Figure 6.3-4.
- The radial boundary is defined as either the transport cask body outer shell (normal conditions) or the cask body with the neutron shield assembly removed (hypothetical accident conditions). The single package model is surrounded by twelve inches of water for reflection. The multiple package array model consists of an infinite number of

FuelSolutions™ W21 canisters/casks in a close packed arrangement (triangular pitch array) with the adjacent casks in contact with one another.

- The FuelSolutions™ W21 canister is modeled axially from the top of the bottom end inner closure plate to a point just below the top shield plug support ring. Reflected planes are inserted at these points to prohibit neutron leakage thus maximizing k_{eff}.
- All fuel assemblies are assumed to be shifted toward the center of the basket to minimize the center-to-center spacing and maximum reactivity. This configuration results in the worst case fuel position as demonstrated by analysis (see Section 6.4.2.1.1 case studies for further discussion).
- Both normal conditions and hypothetical accident conditions are evaluated. The normal condition models of the FuelSolutions™ W21 system include consideration of: a) complete flooding with water at a density sufficient for optimum moderation, b) worst case asymmetric assembly placement within the guide tubes, and c) application of worst case material and fabrication tolerances. The hypothetical accident condition models for the FuelSolutions™ W21 canister include all the normal conditions as well the addition of a 0.08-inch permanent deformation of guide tubes between support plates and the axial detachment of the guide tubes from the basket structure. The loss of the transportation cask neutron shield assembly is also assumed. The 0.08-inch guide tube deformation, which occurs as a result of a cask side drop, is the only significant change in the basket structure geometry that occurs for any postulated storage or transportation accident events or event sequences. The 0.08 value is a bounding value which is based upon the lateral basket g-load that is bounding for all transport and storage drop events.

6.3.1.1 Hypothetical Accident Conditions

The hypothetical accident conditions model for the FuelSolutions™ W21 canister includes the following worst case assumptions:

- Complete flooding with water at a density which produces optimum moderation.
- Worst case asymmetric assembly placement within the guide tubes.
- Application of worst case material and fabrication tolerances.
- Consideration of a bounding 0.08-inch permanent deformation of guide tubes between spacer plates and the axial detachment of the guide tubes from the basket structure (as discussed in Section 6.3.1 above).
- Loss of the transportation cask neutron shield assembly.

The deformation and detachment of the guide tubes and the removal of the transportation cask neutron shield are consistent with the physical condition of the FuelSolutions™ W21 canister after being subjected to the hypothetical accident conditions specified in10CFR71.

These transportation accident conditions bound all conditions of storage.

The hypothetical accident conditions model is an accurate representation of the FuelSolutions™ W21 baskets. The canister is modeled axially from top of the bottom end inner closure plate to a point just below the top shield plug support ring. Reflected planes are inserted at these points

preventing axial leakage of neutrons from the canister. Figure 6.3-5 and Figure 6.3-6 show vertical cross-section (side) views of the FuelSolutions™ W21 hypothetical accident conditions model.

As shown in Figure 6.3-5, the lower portion of the model begins at the top of the bottom end inner closure plate. Next, the water gap between the bottom closure plate and the bottom spacer plate is modeled. The bottom of the fuel appears near the top of the bottom spacer plate at an elevation of 1.97 inches above the bottom closure plate. The bottoms of the guide tubes are modeled in the region between the bottom and first spacer plates at an elevation of 3.75 inches above the bottom closure plate. The bottom of the BORAL® panel is modeled just below the first spacer plate at an elevation of 5.25 inches above the bottom closure plate. This modeled panel elevation conservatively covers any potential accident configuration, as discussed below. The modeled position of the bottom of the BORAL® neutron absorber panel relative to the bottom of the fuel leaves about 3.28 inches of active fuel in an unpoisoned region in the basket. The basket guide tubes are modeled axially to the top of the BORAL® neutron absorber panels as shown in Figure 6.3-6. The axial placement of the guide tubes within the basket is consistent with the damage expected to occur from a nine meter drop in a representative transportation cask (as specified for the hypothetical accident in 10CFR71).

Under normal conditions, the bottoms of the guide tubes are 0.1 inches off the bottom of the canister cavity. The bottoms of the BORAL® panel are 2.0 inches from the canister bottom (i.e., 1.9 inches from the guide tube bottom). As a result of a nine-meter drop, however, the guide tubes separate axially from the basket structure and are free to move in the axial direction within the boundaries of the spacer plate openings. To maximize the effect of the guide tube relocation on system reactivity, the tops of the guide tubes are modeled resting against the top shield plug. This results in a vertical guide tube shift of approximately 2.0 inches. The tabs at the top of the guide tubes are also assumed to flatten out during the cask drop accident resulting in an additional upward shift of 0.75 inch. Finally, the BORAL® panel is free to shift upwards (inside the guide tube wrapper) by 0.5 inch, due to the presence of a half-inch thermal expansion gap that lies above the panel in the wrapper cavity. Due to these factors, the bottom ends of the guide tubes and BORAL® panels may shift upward from their original positions by up to 2.75 inches and 3.25 inches, respectively. Thus, the final position of the bottom of the BORAL® panel following the hypothetical cask end drop is conservatively assumed to be 5.25 inches above the inner closure plate. Due to the presence of the 1.0-inch-high flow channels at the bottom of each guide tube wall, the bottom 1.0 inch of the guide tube structure is not modeled (i.e., is conservatively modeled as water). Due to this, and the upward shift of 2.75 inches, the bottom of the guide tubes is modeled at 3.75 inches above the canister bottom. Figure 6.3-6 shows the position of the top of one BORAL® panel when the top end of the guide tubes rest against the top shield plug.

The active fuel stack is conservatively modeled beginning at a height of 1.97 inches and ending at a height of 151.97 inches. This position represents an active fuel length of 150 inches, which is an upper bound value for all fuel assembly types considered for storage in the FuelSolutions™ W21 canister (Table 6.2-1). The placement of the active fuel stack beginning at a height of 1.97 inches above the bottom closure plate is consistent with the height of the shortest bottom nozzle listed in Table 6.2-1.

The fabrication tolerances for the guide tubes, neutron absorber panels, spacer plates, spacer plate openings, support rods, and support sleeves are summarized in Table 6.3-1. The factors that primarily affect the reactivity of the FuelSolutions™ canister system are radiative neutron absorption and fuel assembly separation. The parameters that affect radiative neutron absorption are the neutron absorber panel thickness and the spacer plate thickness. The parameters that affect fuel assembly separation include fuel assembly position; spacer plate opening size and location; guide tube wall thickness; guide tube inside width; and neutron absorber panel thickness. Tolerances are applied to the FuelSolutions™ W21 canister in such a manner to maximize system reactivity as follows:

- The radiative neutron absorption within the FuelSolutions™ canister is influenced by the thickness of the neutron absorber panel, the spacer plates, and the guide tube wall. The application of the material and fabrication tolerances that increase the neutron absorber, spacer plate, and guide tube wall thickness result in a decrease in the parasitic neutron absorption of the system. Increasing the thickness of the spacer plates and guide tube walls displaces water within the flux traps between guide tubes, and reduces their efficiency at thermalizing and then absorbing neutrons. For a given specified minimum neutron absorber panel boron areal density, increasing the thickness of the panel reduces its neutron absorption. If the areal density is constant, increasing the thickness reduces the boron density within the panel, which reduces the macroscopic neutron absorption cross section of the poison material. The decrease in the parasitic neutron absorption within the system results in an increase in the neutrons available for fission, which correspondingly increases system reactivity.
- As fuel assemblies are brought closer together in the FuelSolutions™ W21 canister, the neutron interaction between assemblies increases, resulting in a higher system reactivity. The fuel assembly separation in the FuelSolutions™ W21 models is decreased by shifting the fuel/guide tube assemblies within the spacer plate openings and by applying component material and fabrication tolerances. The directions of the fuel/guide tube assembly shift for the FuelSolutions™ W21 model is shown in Figure 6.3-7. As shown in Figure 6.3-7, the fuel assemblies are moved into the appropriate corner of each guide tube which is subsequently relocated within the spacer plate opening toward the center of the basket. The tolerances that further minimize separation of the fuel assemblies are then applied as follows: a) the spacer plate opening size is increased; b) the spacer plate opening locations are moved toward the center of the basket; and c) the inside width of the guide tube is increased.
- Another adjustment is made to the guide tube walls to incorporate the bounding 0.08-inch permanent deformation that occurs for the basket *g*-loads expected under a hypothetical nine-meter transportation cask drop. These assumed *g*-loads are bounding for all storage conditions and drop events. The lower face on each guide tube wall is deflected downward along the full length of the guide tube. This is a conservative representation of the permanent guide tube deformation, since the actual deformation does not occur over the full length of the guide tube (i.e., the deformation is limited to regions between basket spacer plates). The effect of the guide tube deflection in the hypothetical accident conditions model is to further decrease the center-to-center spacing of the fuel assemblies in the FuelSolutions™ W21 canister model.

The neutron shield assembly for the transportation cask (i.e., solid neutron shielding material, support ribs, and outer jacket), shown in Figure 6.3-3, is expected to experience damage during a hypothetical nine meter cask drop. For this reason, it is completely removed in the hypothetical accident conditions model.

6.3.1.2 Normal Operating Condition

The normal operating conditions model for the FuelSolutions™ W21 canister includes the following: complete flooding with water at a density sufficient for optimum moderation, worst case asymmetric assembly placement within the guide tubes, and application of worst case material and fabrication tolerances.

The normal operating conditions model includes an accurate representation of the FuelSolutions™ W21 basket assembly in the radial and axial directions. The canister is modeled axially from the top of the bottom end inner closure plate to a point just below the top shield plug. Reflected planes are inserted at these locations preventing axial leakage of neutrons from the canister. Figure 6.3-8 and Figure 6.3-9 show side views of the FuelSolutions™ W21 normal operating conditions model that has been sliced with vertical planes to expose the lower and upper portions of the canister.

As shown in Figure 6.3-8, the lower portion of the model begins at the top of the bottom closure plate. Next, the water gap between the bottom closure plate and the bottom spacer plate is modeled. As discussed in Section 6.3.1.1, the nominal axial locations of the guide tube bottoms and BORAL® panel bottoms are 0.1 inch and 2.0 inches above the canister cavity bottom, respectively. Due to the presence of the flow channels in the guide tube walls, the guide tube bottom is modeled at an elevation of 1.0 inch (between the bottom closure plate and the bottom spacer plate). Due to the half-inch thermal expansion gap above the top of the BORAL® panel (discussed in Section 6.3.1.1), the bottom of the BORAL® panel is conservatively modeled at an elevation of 2.5 inches above the canister bottom (in the middle of the bottom spacer plate), to account for any potential upward shift of the panel. The bottom of the active fuel is located near the top of the bottom spacer plate at an elevation of 1.97 inches above the bottom closure plate. The position of the bottom of BORAL® neutron absorber panel relative to the bottom of the fuel results in a small amount of active fuel (0.53 in.) in an unpoisoned region of the basket. The basket guide tubes are modeled axially to the top of the BORAL® neutron absorber panel as shown in Figure 6.3-9.

The active fuel stack is conservatively modeled beginning at a height of 1.97 inches and ending at a height of 151.97 inches. This represents an active fuel length of 150 inches, which is bounding for all PWR assembly types considered for storage in the FuelSolutions™ W21 canister (see Table 6.2-1). The placement of the active fuel stack beginning at a height of 1.97 inches above the bottom closure plate is consistent with the height of the shortest bottom nozzle listed in Table 6.2-1.

The nominal dimensions for the guide tubes, neutron absorber panels, spacer plates, spacer plate openings, support rods, and support sleeves can be found in Figure 6.3-1 and Figure 6.3-2 as well as in drawings provided in Section 1.5.1 of this FSAR. Material and fabrication tolerances are specifically evaluated for effects on system reactivity in case studies presented in Section 6.4.2.1.1. Worst case material and fabrication tolerances are summarized in Table 6.3-1.

The factors that primarily affect the reactivity of the FuelSolutions™ canister system are radiative neutron absorption and fuel assembly separation. The parameters that affect radiative neutron absorption are the neutron absorber panel thickness, the guide tube wall thickness, and the spacer plate thickness. The parameters that affect fuel assembly separation include: fuel assembly location; spacer plate opening size and location; and guide tube inside width. With the exception of the accident induced guide tube deformation and axial detachment, tolerances are applied in the normal conditions model consistent with the description provided in Section 6.3.1.1 for accident conditions.

6.3.2 Material Properties

The number densities used to model moderator materials and the FuelSolutions™ W21 canister basket, shell and reflector materials are presented in Table 6.3-2 through Table 6.3-11. These material properties are used in all FuelSolutions™ W21 canister single package and multiple package array models.

The FuelSolutions™ W21 canister basket incorporates panels of BORAL® neutron-absorbing material. BORAL® is a thermal neutron absorber (poison) material composed of boron carbide and 1100 alloy aluminum. The boron carbide, in the form of fine particles, is homogeneously dispersed throughout the central layer of the BORAL® panels. The outer layers of the panel are composed of 1100 alloy aluminum. The two materials, boron carbide and aluminum, are ideally suited for long-term use in dry storage cask radiation and thermal environments. Aluminum contact with borated pool water during short-term wet loading operations in PWR spent fuel pools is prevented by sealing the panels in stainless steel guide tube wrappers. BORAL® is manufactured by AAR Advanced Structures under the control and surveillance of a Quality Assured/Quality Control Program that conforms to the requirements of 10CFR50 Appendix B, “Quality Assurance Criteria for Nuclear Power Plants.” Additional product literature for this material is provided in Section 1.5.2 of this FSAR.

The continued efficacy of BORAL® is demonstrated by the process controls under which the material is manufactured and verified. These controls assure a homogeneous dispersion of boron throughout the material. In addition, the effects of long-term exposure to neutron flux from irradiated fuel is negligible because the thermal neutron flux during dry storage is low. This fact, coupled with the use of the minimum specified boron concentration further reduced by 25%, more than accounts for any boron depletion which may occur over the 100-year design life of the FuelSolutions™ W21 canister.

The neutron shield region of the modeled transportation cask geometry contains NS-4-FR neutron shielding material, at a volume fraction of 94.2%, stainless steel 304 backing bars at a volume fraction of 2.6%, and pure copper fins at a volume fraction of 3.2%. These components are mixed into a homogenous material that fills the neutron shield region in the criticality analyses. Table 6.3-11 gives the material description for pure NS-4-FR neutron shield material. The densities shown in the table are multiplied by 0.942 to yield the densities present in the homogenous mixture. The stainless steel 304 atom densities shown in Table 6.3-5 are multiplied by 0.026 and added to the mixture. Finally, the atom density of pure copper (0.08493 atoms/barn-cm) is multiplied by 0.032 and added to the mixture.

Table 6.3-1 - Worst Case Material and Fabrication Tolerances for the FuelSolutions™ W21 Canister

Parameter	Tolerance (cm)
BORAL® Thickness	+ 0.0127
BORAL® Width	- 0.127
Type A Spacer Plate Thickness	+ 0.3175 (W21M Design), + 0.0762 (W21T Design)
Type B Spacer Plate Thickness	+ 0.0762
Spacer Plate Opening Width	+ 0.0381
Spacer Plate Opening Location(1)	- 0.0381
Guide Tube Thickness	+ 0.01778
Guide Tube Inner Dimension	+ 0.127
Guide Tube Outer Wrapper Dimension	+ 0.0051

Note:

(1) See Figure 6.3-7 for a diagram showing orientation for location tolerances.

Table 6.3-2 - UO_2 Number Densities as a Function of Enrichment

Enrichment (w/o)	Number Density (atoms/b-cm)				UO_2 Material Density (atoms/b-cm)
	UO_2	^{235}U	^{238}U	O	
4.0	0.0235956	0.0009554	0.0226402	0.0471912	0.0707867
4.1	0.0235958	0.0009793	0.0226166	0.0471917	0.0707875
4.2	0.0235961	0.0010032	0.0225929	0.0471922	0.0707883
4.3	0.0235964	0.0010271	0.0225693	0.0471928	0.0707891
4.4	0.0235966	0.0010509	0.0225457	0.0471933	0.0707899
4.5	0.0235969	0.0010748	0.0225221	0.0471938	0.0707907
4.6	0.0235972	0.0010987	0.0224985	0.0471943	0.0707915
4.7	0.0235974	0.0011226	0.0224748	0.0471949	0.0707923
4.8	0.0235977	0.0011465	0.0224512	0.0471954	0.0707931
4.9	0.023598	0.0011704	0.0224276	0.0471959	0.0707939
5.0	0.0235982	0.0011942	0.022404	0.0471965	0.0707947

Table 6.3-3 - Water Number Densities as a Function of Density

H_2O Density (g/cm^3)	H_2O Molecular Weight (g/mole)	H Number Density (atoms/b-cm)	O Number Density (atoms/b-cm)	H_2O Material Density (atoms/b-cm)
1.0	18.01528	0.066863	0.033432	0.1002949
0.9	18.01528	0.060177	0.030088	0.0902654
0.8	18.01528	0.053491	0.026745	0.0802359
0.7	18.01528	0.046804	0.023402	0.0702064
0.6	18.01528	0.040118	0.020059	0.0601769
0.5	18.01528	0.033432	0.016716	0.0501474
0.4	18.01528	0.026745	0.013373	0.0401179
0.3	18.01528	0.020059	0.010029	0.0300885
0.2	18.01528	0.013373	0.006686	0.020059
0.1	18.01528	0.006686	0.003343	0.0100295
0.08	18.01528	0.005349	0.002675	0.0080236
0.06	18.01528	0.004012	0.002006	0.0060177
0.04	18.01528	0.002675	0.001337	0.0040118
0.02	18.01528	0.001337	0.000669	0.0020059

Table 6.3-4 - Zircaloy-4 Number Densities

Element	Zirc-4 Density (g/cm^3)	Element Molecular Weight (g/mole)	Weight Percent (w/o)	Number Density (atoms/b-cm)
Sn	6.56	118.71	1.45	0.000483
Fe	6.56	55.847	0.21	0.000149
Cr	6.56	51.9961	0.10	7.6×10^{-05}
Zr	6.56	91.224	98.0975	0.042487
0	6.56	15.9994	0.12	0.000296
C	6.56	12.011	0.014	4.61×10^{-05}
Si	6.56	28.0855	0.0085	1.2×10^{-05}
Zirc-4 Material Density (atoms/b-cm)				0.043548

Table 6.3-5 - 304 Stainless Steel Number Densities

Element	SS-304 Density (g/cm^3)	Element Molecular Weight (g/mole)	Weight Percent (w/o)	Number Density (atoms/b-cm)
Fe	8.027	55.847	69.75	0.06038
Mn	8.027	54.93805	2.0	0.00176
Cr	8.027	51.9961	19.0	0.017666
Ni	8.027	58.69	9.25	0.00762
SS-304 Material Density (atoms/b-cm)				0.087426

Table 6.3-6 - BORAL® Number Densities

^{10}B Loading (g/cm2)	Thickness (cm)		Number Density (atoms/b-cm)				
	BORAL® Core	BORAL® Total	^{10}B Actual/ 75% Credit	^{11}B Actual/ 75% Credit	C	Al	BORAL®
0.02	0.127	0.1905	0.0094724 **0.0071043**	0.0381276 **0.0285957**	0.0119000	0.0568629	0.1044630
0.025	0.1524	0.2159	0.0098671 **0.0074003**	0.0397163 **0.0297872**	0.0123958	0.0592322	0.1088156
0.03	0.19304	0.25654	0.0093478 **0.0070108**	0.037626 **0.0282195**	0.0117434	0.0561147	0.1030884

Table 6.3-7 - 316 Stainless Steel Number Densities

Element	SS-316 Density (g/cm^3)	Element Molecular Weight (g/mole)	Weight Percent (w/o)	Number Density (atoms/b-cm)
Fe	8.027	55.847	65.75	0.056918
Mn	8.027	54.93805	2.0	0.00176
Si	8.027	28.0855	0.75	0.001291
Cr	8.027	51.9961	17.0	0.015806
Ni	8.027	58.69	12.0	0.009885
Mo	8.027	95.94	2.5	0.00126
SS-316 Material Density (atoms/b-cm)				0.086920

Table 6.3-8 - 517 Gr. P Carbon Steel Number Densities

Element	Carbon Steel Density (g/cm^3)	Element Weight Percent (w/o)	Element Molecular Weight (g/mole)	Element Number Density (atoms/b-cm)
Fe	7.86	96.51	55.847	0.0818076
Mn	7.86	0.59	54.93805	0.0005084
Cr	7.86	1.025	51.9961	0.0009332
Mo	7.86	0.525	95.94	0.0002590
Ni	7.86	1.35	58.69	0.0010889
A-517 Material Density (atoms/b-cm)				0.0845971

Table 6.3-9 - XM-19 Stainless Steel Number Densities

Element	XM-19 Density (g/cm^3)	Element Weight Percent (w/o)	Element Molecular Weight (g/mole)	Element Number Density (atoms/b-cm)
Fe	8.027	57.5	55.847	0.049776
Mn	8.027	5.0	54.93805	0.004400
Si	8.027	0.75	28.0855	0.001291
Cr	8.027	22.0	51.9961	0.020455
Ni	8.027	12.5	58.69	0.010297
Mo	8.027	2.25	95.94	0.001134
XM-19 Material Density (atoms/b-cm)				0.087353

Table 6.3-10 - Depleted Uranium Number Densities

Isotope	Depleted Uranium Density (g/cm^3)	Isotope Weight Percent (w/o)	Isotope Molecular Weight (g/mole)	Isotope Number Density (atoms/b-cm)
^{235}U	18.9	0.22	235.043924	0.000106545
^{238}U	18.9	99.78	238.050785	0.047712715
Depleted Uranium Material Density (atoms/b-cm)				0.04781926

Table 6.3-11 - Solid Neutron Shielding Number Densities

Element or Isotope	Density (g/cm^3)	Element or Isotope Weight Percent (w/o)	Element or Isotope Molecular Weight (g/mole)	Element or Isotope Number Densities (atoms/b-cm)
Al	1.62	21.07	26.982	0.007619
C	1.62	27.58	12.011	0.022407
H	1.62	5.88	1.008	0.056919
O	1.62	41.94	15.999	0.025576
N	1.62	1.96	14.007	0.001365
^{10}B	1.62	0.29	10.013	0.000211(1)
^{11}B	1.62	1.28	11.009	0.000849(1)
NS-4 Material Density (atoms/b-cm)				0.114947

Note:

(1) Boron atom densities are reduced by 25%.

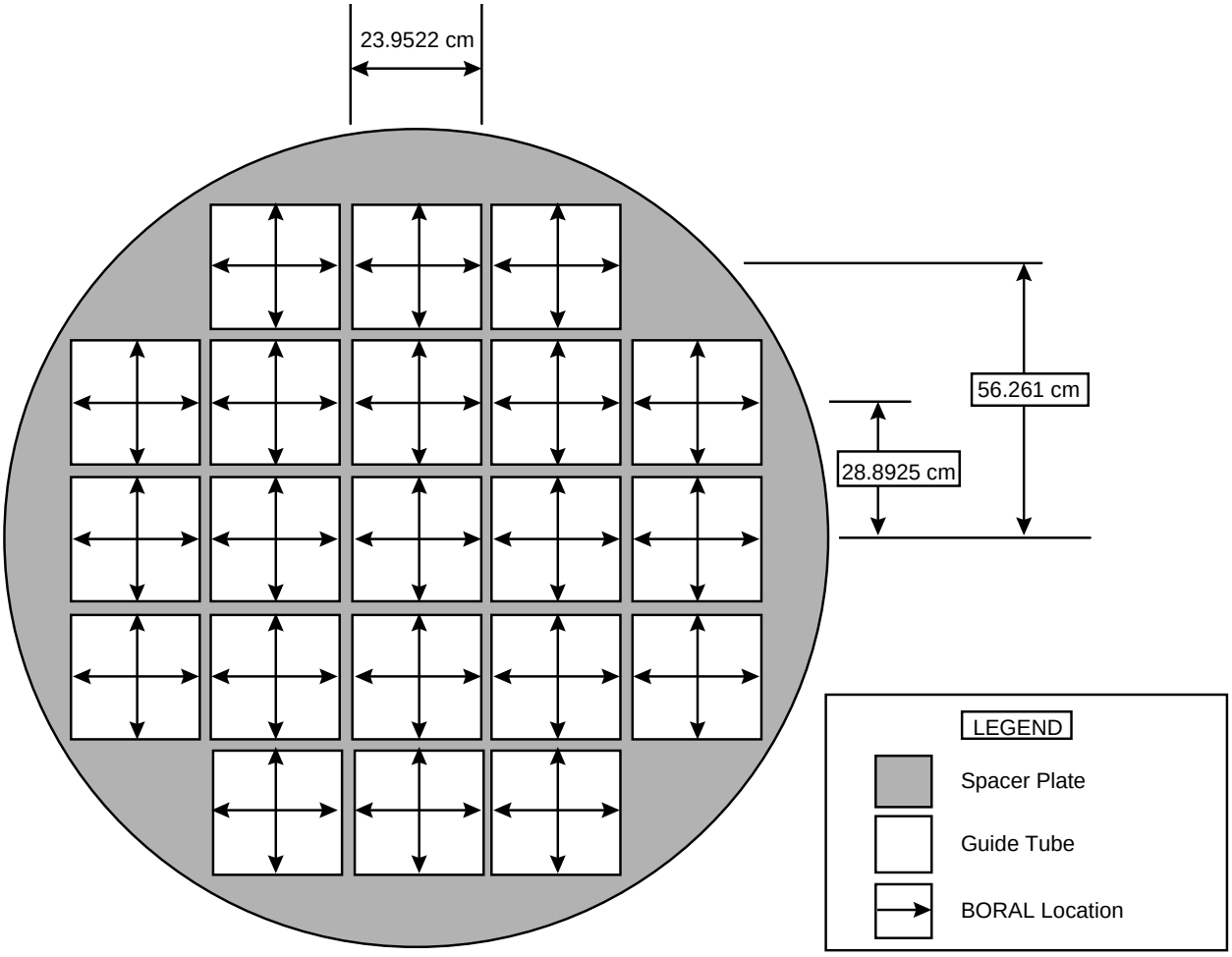

Figure 6.3-1 - FuelSolutions™ W21 Basket (Nominal Dimensions)

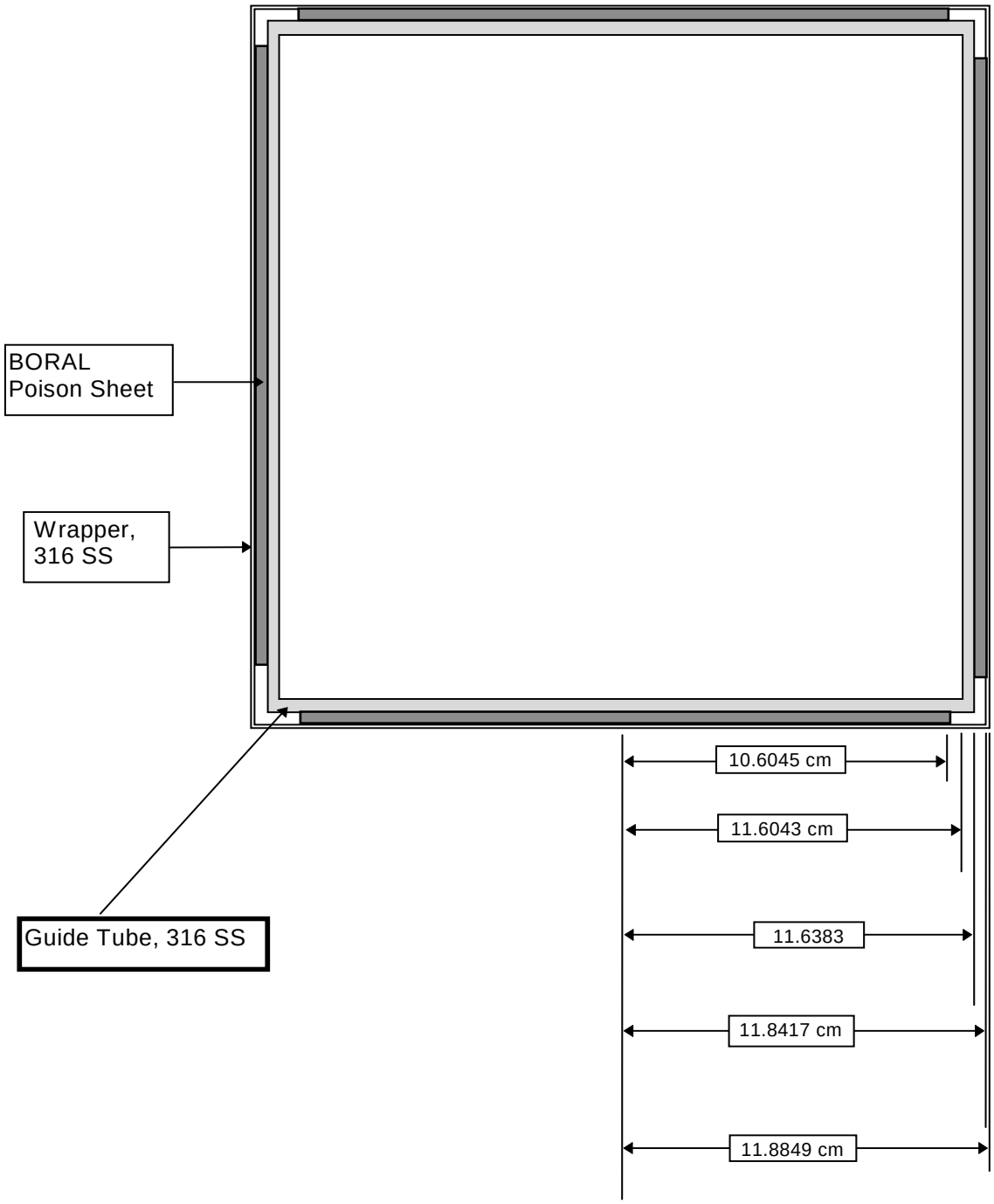

Figure 6.3-2 - FuelSolutions™ W21 Guide Tube Assembly (Nominal Dimensions)

Figure Withheld Under 10 CFR 2.390

Figure 6.3-3 - FuelSolutions™ W21 Shell Assembly and Transport Cask

(For Clarity, Basket Not Shown)

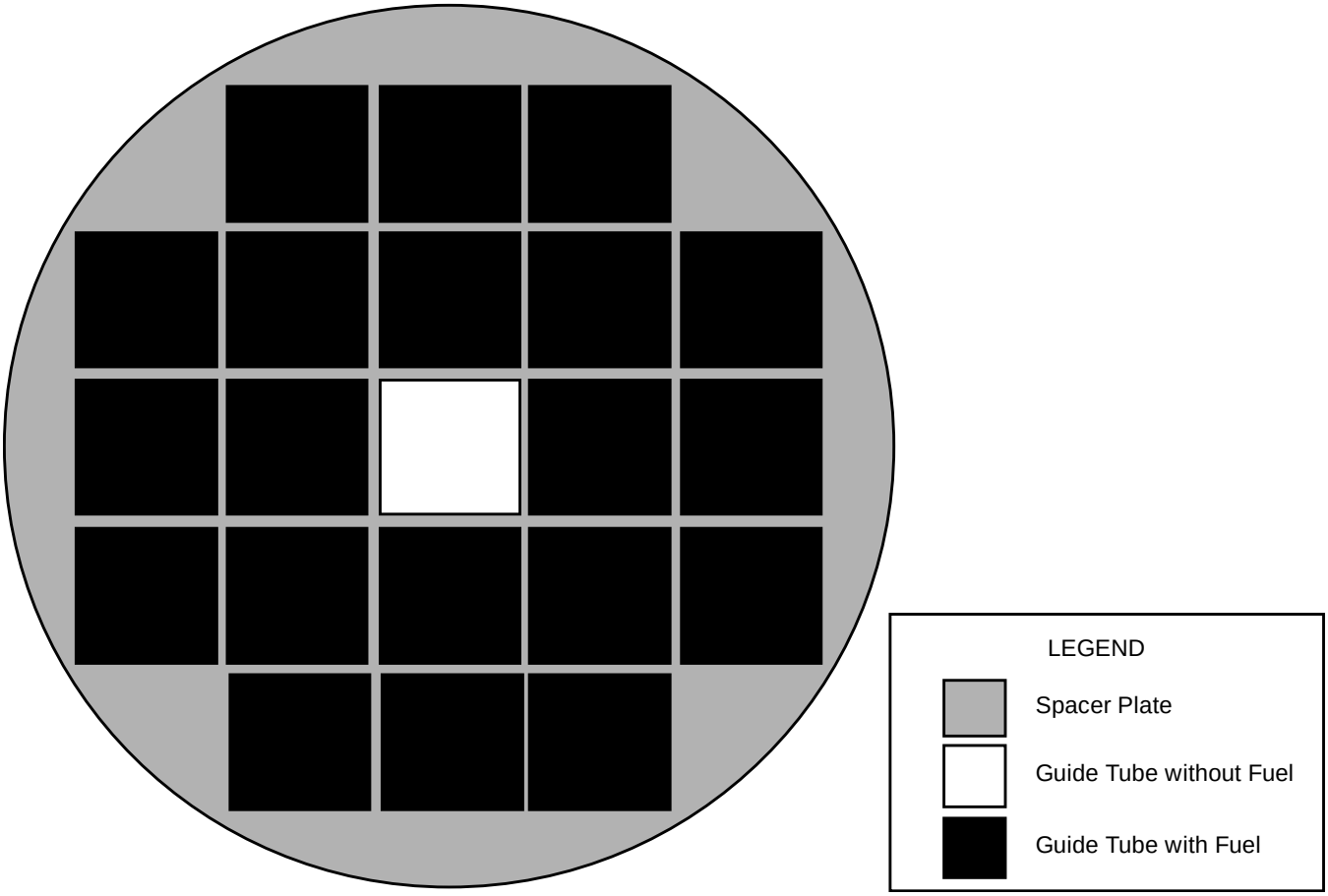

Figure 6.3-4 - Configuration for Canister Loading Specification W21-2

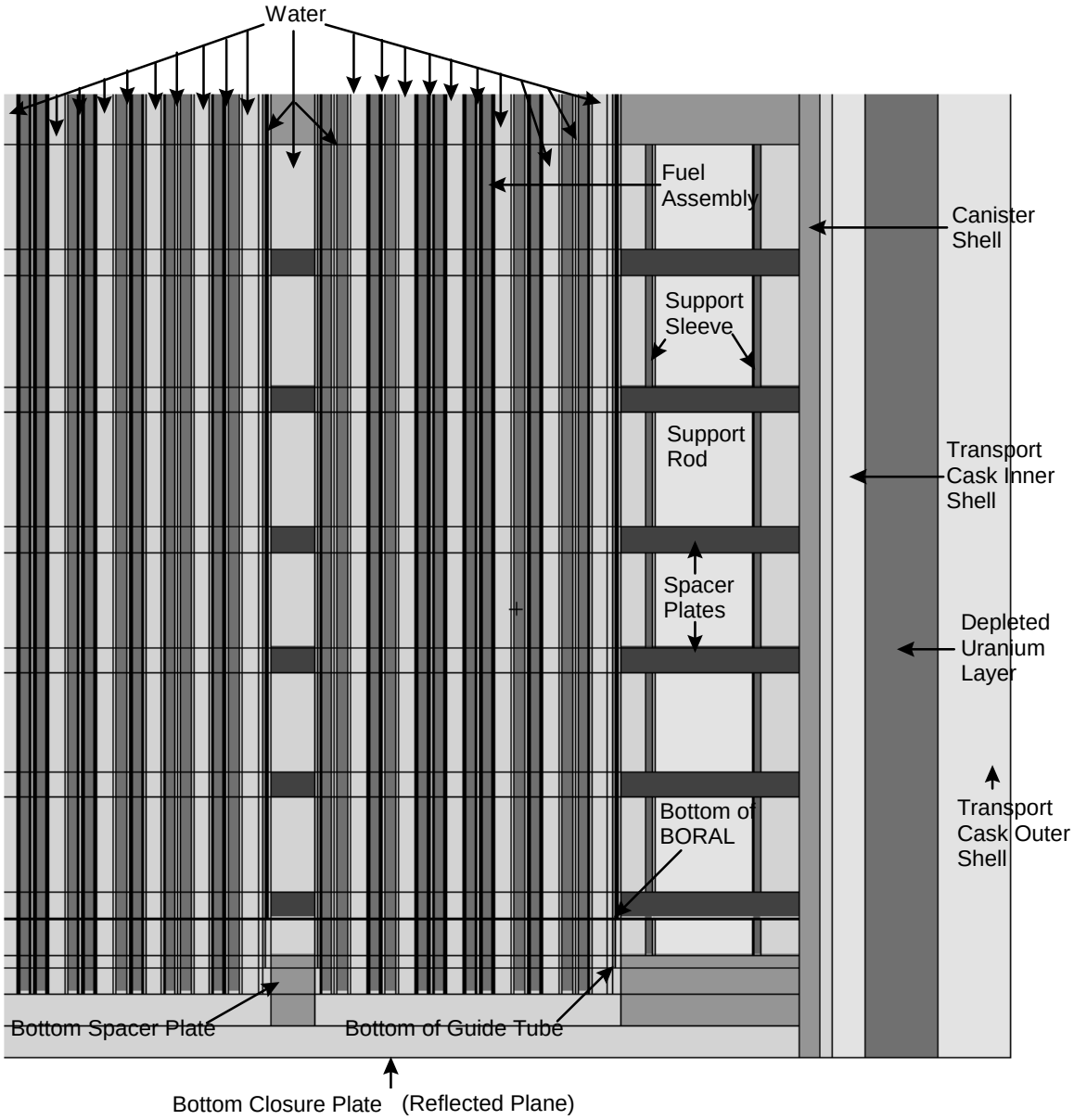

Figure 6.3-5 - Side View of Lower Portion of the W21 Canister Hypothetical Accident Conditions Model (cut-away)

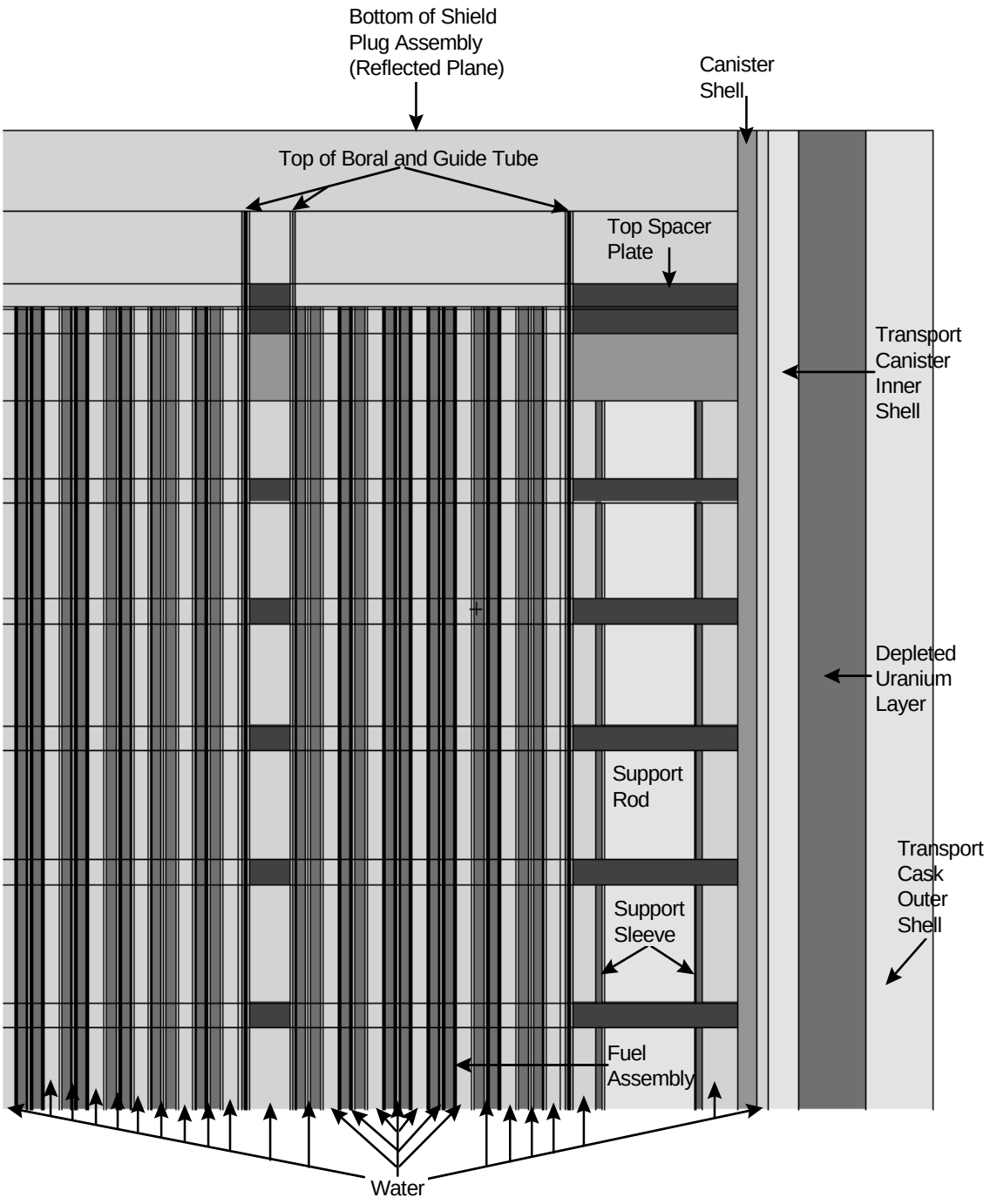

Figure 6.3-6 - Side View of Upper Portion of the W21 Canister Hypothetical Accident Conditions Model (cut-away)

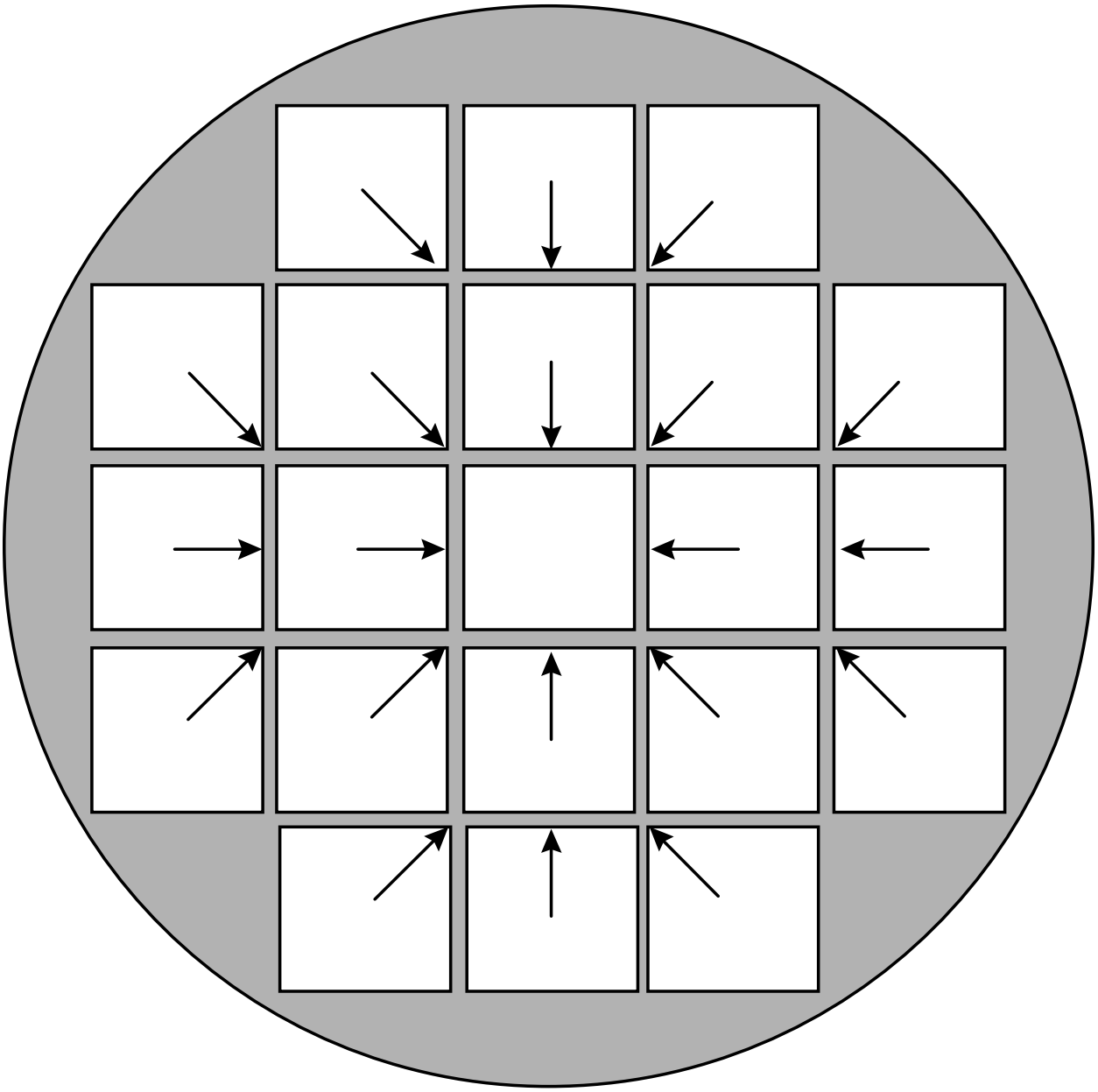

Figure 6.3-7 - Asymmetric Fuel Assembly Shift for the W21 Canister

Note: The arrows indicate the direction of application for the spacer plate opening location tolerance.

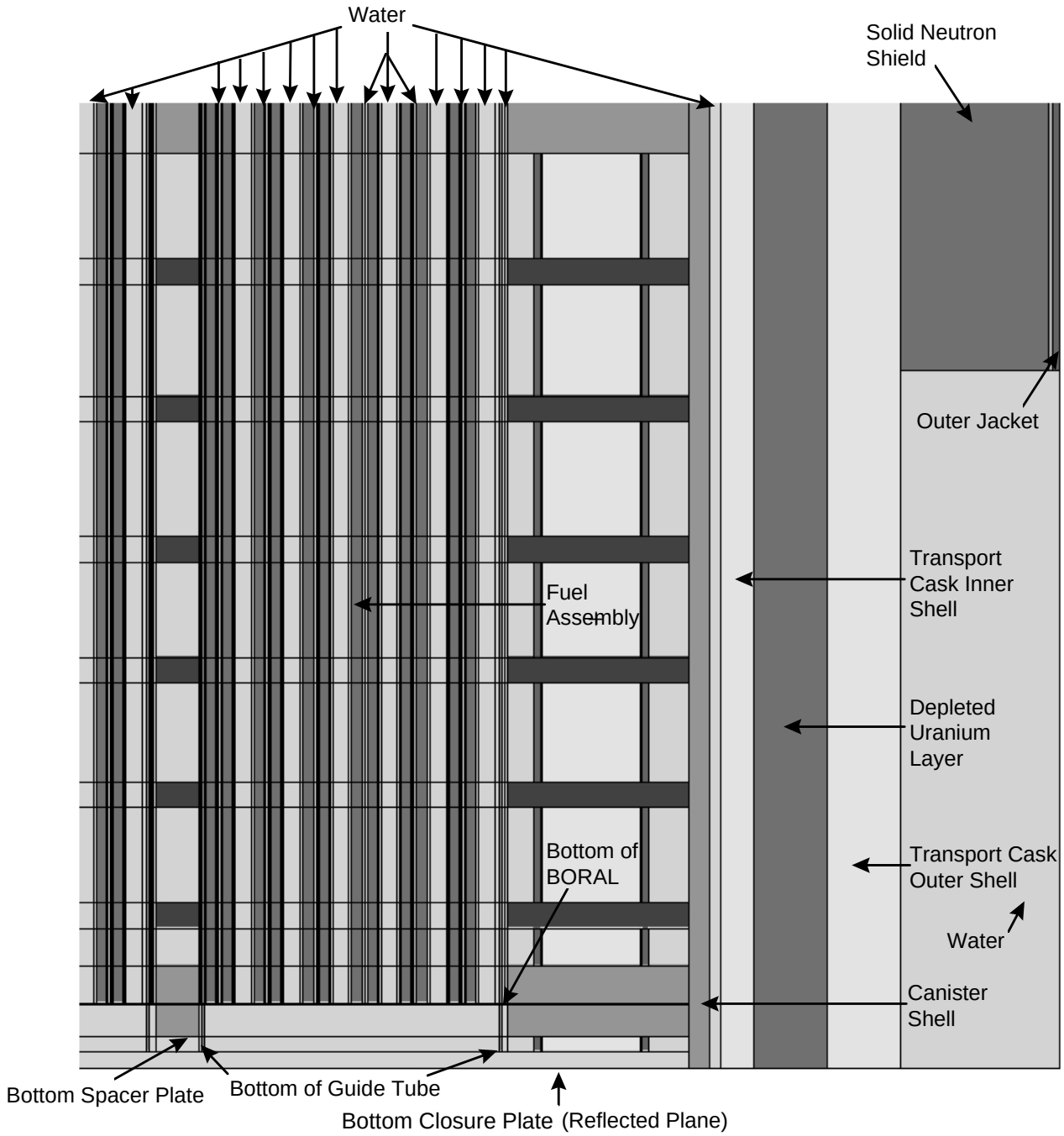

Figure 6.3-8 - Side View of Lower Portion of the W21 Normal Conditions Model (cut-away)

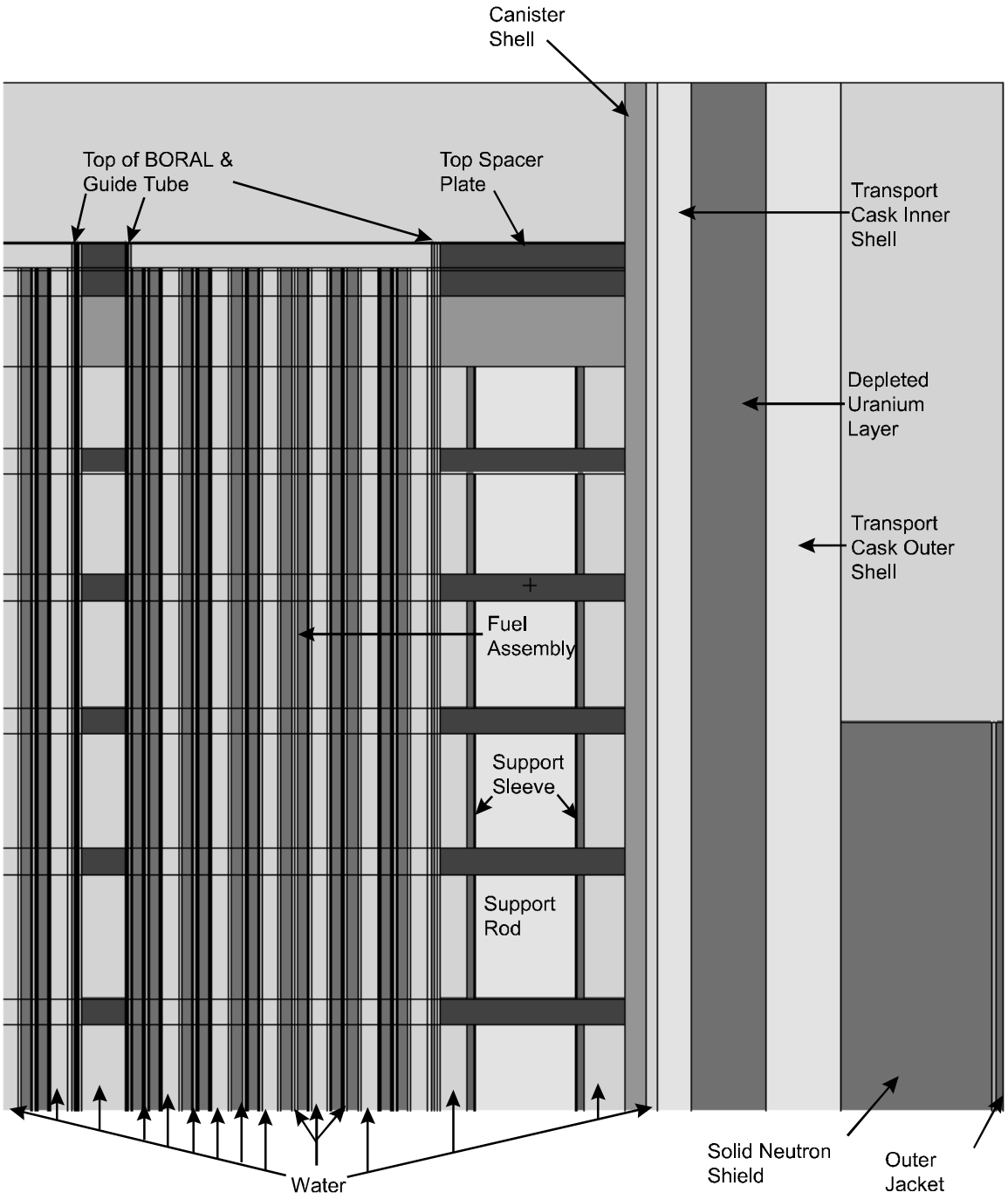

Figure 6.3-9 - Side View of Upper Portion of the W21 Normal Conditions Model (cut-away)

Figure Withheld Under 10 CFR 2.390

Figure 6.3-10 - FuelSolutions™W21 Shell Assembly and Transfer Cask

(For Clarity, Basket Not Shown)

This page intentionally left blank.

6.4 Criticality Evaluation

6.4.1 Computer Programs

The design method for the FuelSolutions™ W21 canister system analysis uses the MCNP-4a code package for reactivity determination to assure the criticality safety of stored fuel assemblies. MCNP is a general purpose Monte Carlo code that can be used for neutron, photon, electron, or coupled neutron/photon/electron transport. It is suitable for criticality analysis since it has the capability to calculate eigenvalues for critical systems. MCNP treats an arbitrary three-dimensional configuration of materials in geometric cells bounded by first and second degree surfaces. To calculate the effective multiplication factor, MCNP uses three separate estimators: collision, absorption, and track length. The three estimators are statistically combined to provide the best estimate confidence interval for k_{eff}. The primary sources of nuclear data for MCNP are evaluations from the Evaluated Nuclear Data File (ENDF) system, the Evaluated Nuclear Data Library (ENDL), the Activation Library (ACTL) compilations from Lawrence Livermore Laboratory, and evaluations from the Applied Nuclear Science (T-2) Group at Los Alamos. The information from these various sources is incorporated into continuous energy nuclear and atomic data libraries that MCNP uses during a calculation. The primary cross-section data file used for the FuelSolutions™ SFMS criticality analysis is the ENDF/B-V.

6.4.2 Multiplication Factor

6.4.2.1 Multiple Package Array

The FuelSolutions™ criticality analyses model infinite arrays of canisters inside a representative transportation cask geometry. Since FuelSolutions™ W21 canisters are stored in the dry condition, a transportation cask array configuration is selected for evaluation as the bounding array condition. The applicability of transportation cask array evaluation models to storage conditions is discussed further in Section 6.6 of the FuelSolutions™ Storage System FSAR.

The array model consists of an infinite number of FuelSolutions™ W21 canisters/casks with adjacent casks in contact with one another in a close packed (triangular pitch) arrangement with interspersed moderator. Case studies are first presented to establish: a) the limiting case FuelSolutions™ W21 canister configuration, and b) the optimum pure water moderator density condition. The hypothetical accident and the normal conditions of operation models are analyzed for both the full and partial loading cases and provide the analytical basis for the fuel type specific loading criteria summarized in Table 6.1-1.

6.4.2.1.1 Case Studies

6.4.2.1.1.1 Canister Configuration

Six basket assembly configurations are considered for the FuelSolutions™ W21 canister multiple package array models. The configurations are designated LD, LS, SD, SS, LL, and SL. The six basket configurations differ with respect to overall length; spacer plate location; guide tube and neutron absorber panel length; and support rod sleeve length. (See Section 1.2.1.3 for further explanation of FuelSolutions™ W21 canister configurations.)

Two canister designs are considered for the FuelSolutions™ W21 canister multiple package array models: the W21M design with the LD, LS, SD, and SS basket configurations; and the W21T design with the LL, LS, SL, and SS basket configurations. In addition to the differences among basket configurations, the two canister designs differ with respect to the materials used for the Type A spacer plates, support sleeves, support rods, shell assemblies, outer closure plates, inner closure plates, and shield plug assemblies.

The primary characteristics distinguishing one canister design from another are the spacer plate thickness and axial locations. The spacer plate thickness and axial locations influence the size of the flux traps between BORAL® panels in the W21 canister and, therefore, have an impact on the reactivity of the system. The efficiency of the flux traps is decreased when the spacer plates are thicker or when they are moved closer together in the canister. The decrease in flux trap efficiency results in an increase in system reactivity. To demonstrate this phenomenon, three cases are run using a multiple package array hypothetical accident case MCNP model for the W21 canister. Each model contains Westinghouse 17x17 OFA fuel assemblies at an enrichment of 4.60 w/o ^{235}U. The first case is an infinite axial model with 4.2 inches of water separating each spacer plate. The second case involves the same infinite axial model with 4.6 inches of water separating each spacer plate. The final case includes the infinite axial model with 3.8 inches of water separating each spacer plate. The results from the MCNP runs are shown in Table 6.4-1. As demonstrated in Table 6.4-1, the infinite axial model with minimum spacer plate spacing has the highest k_{eff}.

Since minimizing spacer plate spacing increases system reactivity in the FuelSolutions™ W21 canister, the LD, LS, SD, SS, LL, and SL basket configurations are compared to determine which contains spacer plates with minimum axial separation. From the comparison among basket configurations, the SS basket has minimum spacer plate spacing in the axial center of the canister. However, the LS basket has minimum spacer plate spacing toward the top and bottom of the canister. In addition, the LS basket contains a larger number of spacer plates overall and the overall length of the LS basket is greater than the SS basket. Since no clear choice is evident between the LS and SS baskets, both configurations are modeled using the W21M canister design under hypothetical accident conditions to determine clearly which one is more reactive. The fuel assemblies in the models contain uranium dioxide at a uniform pin enrichment of 4.60 w/o ^{235}U over the entire length of each fuel stack. The final k_{eff} results for the two basket configurations are shown in Table 6.4-1. As shown in Table 6.4-1, the LS configuration has the highest k_{eff}. Therefore, the LS basket configuration is chosen for subsequent calculations.

Note that the USL parameters (rod pitch, water-to-fuel volume ratio within the assembly, enrichment, and H-to-^{235}U ratio within the assembly) are not affected by the basket structure geometry. Therefore, the limiting USL value, for a given fuel assembly type, does not vary between different FuelSolutions™ W21 canister types. For this reason, the canister type that yields the maximum k_{eff} value also yields the lowest margin relative to the limiting USL value.

Because the spacer plate spacing in the FuelSolutions™ W21M and W21T canister designs are the same for similar basket configurations, neither design configuration is expected to dominate the other with respect to reactivity. If any discernible differences in reactivity exist, the W21M design is expected to be slightly more reactive than the W21T design since it contains Type A spacer plates which are two inches thick and displace more water from the flux traps than the

0.75-inch thick Type A spacer plates in the W21T design. Therefore, the W21M canister design is chosen for subsequent criticality calculations.

MCNP models are created for the FuelSolutions™ W21 canister to confirm worst case treatment of material and fabrication tolerances. The Westinghouse 17x17 OFA fuel assembly in the W21M canister under hypothetical accident conditions is chosen as the base model for comparison. A separate MCNP model is constructed for each tolerance value at the opposite end of the tolerance range relative to the base model. The models are multiple package array configurations reflected to obtain an infinite array of transportation casks. Fuel positioning is modeled as shown in Figure 6.3-7. The results of these case studies are used to determine the worst case dimension and direction of application for each tolerance range. The results of all the tolerance calculations are shown in Table 6.4-2. The Table 6.4-2 results confirm the worst case treatment of tolerances for the W21 canister, which are summarized in Table 6.3-1.

6.4.2.1.1.2 Optimum Moderator Density Scoping Analyses for the FuelSolutions™ W21M-LS Canister Design

The hypothetical accident and normal operating conditions models for the FuelSolutions™ W21 canister are completely flooded with water at a density sufficient for optimum moderation. Optimum moderation is the condition that produces the highest k_{eff} value over the range of moderation conditions. In the FuelSolutions™ W21 multiple package array models, water is present inside the containment boundary of the canisters as well as in between casks. Therefore, two cases are considered for the optimum moderation calculations: the interspersed moderator case in which the moderator density is varied outside the containment boundary, and the interior moderator case in which the moderator density is varied inside the containment boundary.

For the interspersed moderator case, the Westinghouse 17x17 OFA fuel assembly type is placed into the hypothetical accident condition, multiple package array model; and the moderator density outside the containment boundary is varied between 0.0 and 1.0 g/cc. The assumptions listed in Section 6.3.1 are used for the model, and the fuel is modeled with uranium dioxide at a uniform pin enrichment of 4.60 w/o ^{235}U over the entire length of each fuel stack.

MCNP calculations are performed for each interspersed moderator density case shown in Table 6.4-3. The final results for the interspersed moderator density calculations are also shown in Table 6.4-3. As shown in Table 6.4-3, optimum interspersed moderation occurs at a water density of 1.0 g/cc. Based on these results, all multiple package array calculations are made using an interspersed water density of 1.0 g/cc.

For the interior moderator case, the Westinghouse 17x17 OFA fuel assembly type is placed into the hypothetical accident condition, multiple package array model; and the moderator density inside the containment boundary is varied between 0.0 and 1.0 g/cc. The assumptions listed in Section 6.3.1 are used for the model, and the fuel is modeled with uranium dioxide at a uniform pin enrichment of 4.60 w/o ^{235}U over the entire length of each fuel stack.

MCNP calculations are performed for each interior moderator density case shown in Table 6.4-4. The final results for the interior moderator density calculations are shown in Figure 6.4-1. As shown in Figure 6.4-1, optimum interior moderation occurs at a water density of 1.0 g/cc. Based on these results, all calculations for the fully loaded FuelSolutions™ W21 canisters are made with an interior water density of 1.0 g/cc.

The partial loading configuration for the FuelSolutions™ W21 represents an interior geometrical arrangement of fuel assemblies that is different from the fully loaded configuration. Although different conclusions are not expected, the moderator density is varied inside the containment boundary for the partially loaded, hypothetical accident condition, multiple package array model. The assumptions listed in Section 6.3.1 are used for the model, and a Westinghouse 17x17 OFA fuel assembly type is modeled with uranium dioxide at a uniform pin enrichment of 4.90 w/o ^{235}U over the entire length of each fuel stack. MCNP calculations are performed for each interior moderator density case shown in Table 6.4-4. The final results for the interior moderator density calculations are shown in Figure 6.4-2. As shown in Figure 6.4-2, optimum interior moderation for the partial loading configuration occurs at a water density of 1.0 g/cc. Based on these results, all calculations for the partially loaded FuelSolutions™ W21 canisters are made with an interior water density of 1.0 g/cc.

6.4.2.1.1.3 Assembly Geometry Parameter Variations Between Assemblies Within a Given Assembly Class

As discussed in Section 6.1, criticality calculations are performed for the bounding assembly configurations defined for each assembly class. These bounding assembly configurations assume the bounding (worst case) value that occurs within the class for each physical assembly parameter. These worst case values are conservatively assumed to simultaneously exist in the bounding assembly configuration. The bounding assembly configuration may or may not correspond to one of the actual assemblies within the assembly class.

In order to determine the bounding values for each assembly parameter, two pieces of information must be known. First, the range of values covered by the specific assembly types within each assembly class must be known in order to determine limiting values. Second, it must be known whether the minimum or maximum value of a parameter yields higher reactivity. The bounding assembly configuration then assumes the minimum or maximum value (for all assemblies within the class), whichever yields maximum reactivity. This parameter is then listed as a maximum or minimum allowable value in the assembly class specifications (as shown in Table 6.1-1). The determination of which extreme values (minimum or maximum) yield higher reactivity is described below for all the parameters that vary among assemblies within the defined assembly classes.

Assuming a maximum active fuel height clearly increases reactivity since it minimizes axial leakage. Assuming a minimum assembly bottom nozzle height clearly increases reactivity since it maximizes the amount of exposed (unpoisoned) fuel that may lie below the bottom of the neutron absorber panels. Increasing the UO_2 material density also always increases reactivity. For these reasons, the maximum fuel height (150 in.), the minimum bottom nozzle height (1.97 in.), and the maximum UO_2 density (96.5% UO_2 theoretical) seen for PWR fuel assemblies are conservatively assumed for all of the criticality analyses (i.e., for all assembly classes and for all specific assembly types). One exception is the CE 15x15 Palisades assembly, which has a fuel density of 97.5% theoretical UO_2 density. These bounding values are shown in the fuel specifications given in Table 6.1-1 for all assembly classes. Thus, the fuel specifications do not allow fuel with values outside these bounding values that are assumed in the criticality analyses.

The presence of the zircaloy cladding reduces reactivity because the cladding displaces water (moderator). Therefore, reducing the cladding volume increases reactivity. For this reason,

decreasing the cladding diameter or the cladding thickness causes reactivity to increase. Therefore, the lower bound values for these parameters are the bounding values that are listed in the fuel specification (in Table 6.1-1), and are the values assumed for the bounding assembly configurations. The fuel specifications therefore require that the cladding diameter and thickness values be equal to or greater than the values shown in Table 6.1-1.

A set of sensitivity analyses is performed to verify that decreasing the cladding diameter and thickness increases reactivity. The analyses are performed for the W21 canister fully loaded with 4.6% enriched W 17x17 OFA fuel assemblies. A total of five cases are presented. The first case is the reference case, which models nominal W 17x17 OFA assembly cladding dimensions. The second and third cases increase and decrease the cladding I.D. by 0.003 inches, respectively, while holding the cladding O.D. fixed at the nominal value. This corresponds to decreasing and increasing the cladding thickness by 0.0015 inches, respectively. The fourth and fifth cases increase and decrease the cladding O.D. by 0.01 inches, respectively, while keeping the cladding thickness fixed at the nominal value. The results of these sensitivity analyses are presented in Table 6.4-5. The results show that Cases 2 and 5, which correspond to decreasing the cladding thickness and decreasing the clad O.D., respectively, cause reactivity to increase. Cases 3 and 4, by contrast, caused reactivity to decrease versus the nominal case (Case 1). Thus, the results confirm that a lower bound cladding thickness and diameter yields maximum reactivity.

For reasons similar to those discussed above for the cladding, the presence of guide and instrument tubes cause reactivity to decrease, since they displace water. The W21 canister criticality analyses conservatively neglect the presence of guide and instrument tubes, as noted in Table 6.1-1. Guide tube materials and dimensions may vary between assemblies within the given assembly classes. However, since the bounding assembly configurations defined for each class conservatively neglect the guide and instrument tubes, the dimensions and materials of the guide tubes are unrestricted by the fuel specifications.

The remaining variable assembly parameter is the fuel pellet diameter. Unlike the other variable parameters, the effects of the pellet radius on reactivity are not obvious. Therefore, sensitivity analyses are performed for every assembly class to determine the optimum pellet diameter. For each assembly class, the defined bounding assembly configuration is modeled. The values of all of the other parameters are those listed in Table 6.1-1 for the assembly class in question. The pellet diameter is then varied. One of the analyzed pellet diameter values is the one shown in Table 6.1-1 for the assembly class (i.e., the value assumed in the bounding assembly configuration criticality analysis). Reactivity is then determined and plotted as a function of pellet diameter.

The results of the pellet diameter sensitivity analyses are presented for the major assembly classes in Figure 6.4-3 through Figure 6.4-10. The figures plot the final calculated k_{eff} value (with uncertainties) versus H-to-^{235}U ratio. The fuel pellet diameters that correspond to each data point are also listed in the plots. The plot curves show the H-to-^{235}U ratio, as well as the pellet diameter, that yields maximum reactivity. One of the data points presented corresponds to the nominal case, i.e., the pellet diameter of the bounding assembly configuration specified in Table 6.1-1.

The results show that all PWR assemblies are significantly under-moderated. For this reason, decreasing the fuel pellet diameter actually increases reactivity. Note that in these criticality analyses, the fuel rod interiors are conservatively assumed to be filled with water. Therefore a

reduction in pellet diameter causes the volume of water between the fuel rods to increase. All of the plots show an optimum pellet diameter that is significantly smaller than the minimum value for all assemblies within the assembly class. In all cases, the data point that corresponds to the fuel specification value of the pellet diameter is near the left edge of the plot, in the region of lower H-to-^{235}U ratio, where k_{eff} is significantly below the maximum value (i.e., it is well to the left of the peak).

Thus, in summary, all PWR fuel is significantly under-moderated, and decreasing the pellet diameter will always increase reactivity. For this reason, the pellet diameter is specified as a minimum value in the fuel specifications shown in Table 6.1-1. The bounding assembly configurations assume a pellet diameter that is a lower bound value for all the specific assembly types within the class.

6.4.2.1.1.4 The FuelSolutions™ W21 Canister Inside the FuelSolutions™ W100 Transfer Cask

As discussed in Section 6.3.1, a criticality analysis of the FuelSolutions™ W21 canister inside the FuelSolutions™ W100 transfer cask is performed to verify that the transfer configuration is no more reactive than the modeled transportation cask configuration shown in Figure 6.3-3. This criticality model is a single package, normal condition model with full water reflection around the transfer cask (i.e., an accurate representation of transfer conditions). The model is conservative relative to actual transfer (pool loading) conditions in that it neglects the presence of any boron in the pool water. The model assumes a bounding W21 canister configuration fully loaded with W 17x17 OFA assemblies with an enrichment level of 4.60%. The radial dimensions and materials of the transfer cask are shown in Figure 6.3-10.

The normal condition transfer cask model assumes no significant deformation of the W21 basket structure. A second criticality model, which applies the basket deformations discussed in Section 6.3.1.1, is also performed. This model is identical to the normal condition model in all other respects. This second model is performed so that potential transfer cask accident scenarios are considered. The transfer cask may be placed back into the fuel pool for unloading after a transfer cask drop event.

The calculated k_{eff} value for the normal condition, single package transfer cask model is 0.93588 ± 0.00092. The calculated k_{eff} value for the transfer cask model that assumes accident condition basket deformations is 0.93924 ± 0.00092. By contrast, the calculated k_{eff} value for the single package accident condition transportation cask model (shown in Table 6.4-11 – Case 1) is 0.93968 ± 0.00095. The results show no statistically significant difference between the transfer and transportation cask cases. Also, the normal condition transfer configuration (with no basket deformations) is less reactive than the transport configuration. Therefore, it is concluded that the transfer configuration is no more reactive than the modeled transportation cask configuration. Thus, the modeled configuration bounds all storage and transfer conditions.

6.4.2.1.1.5 Fuel Assembly Misload Evaluation

All possible changes in canister geometry due to any credible storage condition event have been considered in the criticality analyses (as discussed in Section 6.3.1). Even with these (worst possible) potential basket geometry changes, the criticality analyses show an allowable ^{235}U enrichment level of 4.6% or more for all PWR fuel assemblies, assuming fresh fuel and a

canister filled with fresh (unborated) water. The maximum enrichment that occurs for any fuel material in all U.S. nuclear power plants is 5.0%. Thus, if the FuelSolutions™ W21 canister were completely loaded with the most reactive PWR fuel assembly, with no burnup, at an enrichment value of 5.0%, k_{eff} would remain under 0.95 unless the fuel pool boron concentration were almost zero, which is highly unlikely. Therefore, during canister loading, two independent unlikely events, the loading of fuel assemblies that are over the specified maximum allowable enrichments, and having a fuel pool boron concentration that is well below the plant's specified levels, are required before it is possible for k_{eff} to exceed 0.95. During storage or transport, two independent unlikely events are also required, ingress of water into the sealed canister, and the loading of fuel assemblies that exceed the maximum allowable enrichment level. Even if both of these unlikely events were to occur, the FuelSolutions™ W21 canister would remain sub-critical (k_{eff} ~ 0.96).

6.4.2.1.2 Hypothetical Accident Conditions Analyses for FuelSolutions™ W21 Canister Design

6.4.2.1.2.1 Full Loading Analyses for the FuelSolutions™ W21M-LS Canister Design

The maximum allowable ^{235}U enrichments for the storage of fuel assemblies in the FuelSolutions™ W21 canister are determined for each fuel assembly class using the appropriate bounding fuel assembly configuration (as defined for each class in Table 6.1-1) in the multiple package array hypothetical accident condition model. Using the assumptions listed in Section 6.3.1, a multiple package array hypothetical accident condition model is developed for each bounding fuel assembly configuration.

These bounding configuration criticality analyses, along with the assembly sensitivity parameter sensitivity studies discussed in Section 6.4.2.1.1.3, are the complete bases of qualification for all the assembly classes described in Table 6.1-1, and for all the specific assembly types (that fall into each class) that are listed in Table 6.2-1. The sensitivity analyses verify that the bounding assembly configuration criticality analyses are bounding for all specific fuel assemblies that meet the fuel specifications given in Table 6.1-1, including any assemblies that may not be listed in Table 6.2-1.

However, to provide additional confirmation, MCNP calculations are performed to verify that the bounding fuel assembly configurations defined for each fuel assembly class are more reactive than all the specific assembly types within that class that are listed in Table 6.2-1. For each assembly class, all the specific fuel assemblies (as well as the bounding assembly configuration for the class) were analyzed with uniform pin enrichments equal to the maximum allowable value shown for that class in Table 6.1-1.

The results of these MCNP runs are shown in Table 6.4-6. MCNP calculated final k_{eff} results for the hypothetical accident condition calculations are shown, along with the limiting USL value, and the margin between the final k_{eff} and the limiting USL value, for each analyzed specific assembly type and bounding assembly configuration.

The darker horizontal lines shown in Table 6.4-6 group the list of assemblies into their respective assembly classes. Within each assembly class group, each of the specific assembly types within the group is shown, along with the bounding assembly configuration for that assembly class. The

names given in Table 6.4-6 for the specific assembly types correspond to those shown in Table 6.2-1. The names shown for the bounding assembly configurations are the names of the criticality class (as shown in Table 6.1-1), followed by the word "bounding" in parentheses. The bounding assembly configurations may or may not be identical to one of the specific assembly types within their respective assembly class.

If there is more than one specific assembly type within a given assembly class, the bounding assembly configuration is listed separately, even if it is identical to one of the specific assemblies in the class. If this is the case, the criticality analysis results presented for the bounding configuration is identical to those presented for one of the specific assembly types. If only one specific assembly type lies within a given class, then the bounding assembly configuration defined for that class simply corresponds to that specific assembly type. In these cases, only the bounding assembly configuration case is presented in Table 6.4-6.

Criticality results are presented in Table 6.4-6 for all of the specific assembly types listed in Table 6.2-1. One exception is the CE 16x16 St. Lucie 2 assembly. This assembly is identical to the CE 16x16 (and System 80) assembly, except that its active fuel length is shorter. However, as discussed in Section 6.4.2.1.1.3, a bounding active fuel length of 150 inches is conservatively assumed for all specific assembly types in the criticality analyses. Thus, following this methodology, the criticality models for the CE 16x16 and the CE 16x16 St. Lucie 2 assemblies would be identical. Therefore, a separate analysis is not presented for the CE 16x16 St. Lucie 2 assembly.

The analyses show that for each assembly class, the maximum final calculated k_{eff} value, as well as the lowest margin versus the limiting USL value, occurs for the bounding assembly configuration defined for that class. All of the analyzed specific assembly types within the class are shown to be less reactive than the bounding assembly configuration. The analyses presented in Table 6.4-6 also show that the final calculated k_{eff} values remain under the limiting USL value for each of the specific assembly types and for the bounding assembly configuration for each assembly class. Thus, the analyses verify that, at the maximum allowable enrichment defined in Table 6.1-1 for each assembly class, the criticality requirements are met for all assemblies within that class.

For all PWR assembly types that are to be loaded into the FuelSolutions™ canister, the pin pitch USL value is the limiting (lowest) USL value. Thus, the pin pitch USL value is presented in Table 6.4-6 and is used to determine the criticality margins shown in that table. Simple formulas shown in Section 6.5 give the USL values as a function of assembly pin pitch, enrichment, water-to-fuel volume ratio, and H-to-^{235}U ratio. For each of these four USL parameters, the ranges covered by the set specific fuel assembly types described in Table 6.2-1 are presented in Table 6.4-7. Table 6.4-7 also presents the corresponding USL value range for each of the four parameters (which are calculated from the USL parameter ranges using the Section 6.5 formulas). The Table 6.4-7 data show that each of the four USL values vary over a very narrow range for the entire set of PWR assembly types described in Table 6.2-1. The data also show that the upper bound value for the pin pitch USL is below the lower bound values for each of the other three USLs. Thus, for any PWR assembly, the pin pitch USL is always the limiting USL value.

6.4.2.1.2.2 Partial Loading Analyses for the FuelSolutions™ W21M-LS Canister Design

A multiple package array partially loaded canister model under hypothetical accident conditions is developed using the assumptions listed in Section 6.3.1. The models include the bounding fuel assembly configurations that had maximum allowable ^{235}U enrichments less than 5.0 w/o in the fully loaded canister configuration. MCNP calculations are performed to demonstrate that the partially loaded configuration of the FuelSolutions™ W21 canister could support allowable enrichments of 5.0 w/o for these bounding fuel assembly configurations. The MCNP results for each partially loaded canister calculation are shown in Table 6.4-8. The table gives the final calculated k_{eff} value, the limiting USL value, and the margin between the k_{eff} and USL values for each analyzed assembly configuration (i.e., each assembly class). As discussed in Section 6.4.2.1.2.1, the pin pitch USL is the limiting USL value for all PWR assembly types. The results show that the criticality requirements are met for each bounding assembly configuration (i.e., for each listed assembly class) at the enrichment levels shown.

6.4.2.1.3 Normal Operating Conditions Analyses for FuelSolutions™ W21M-LS Canister Design

6.4.2.1.3.1 Full Loading Analyses for the FuelSolutions™ W21M-LS Canister Design

Using the assumptions listed in Section 6.3.1, a multiple package array normal operating condition model is developed for each bounding fuel assembly configuration described in Table 6.1-1. MCNP calculations are performed to demonstrate that the maximum allowable ^{235}U enrichments calculated in Section 6.4.2.1.2 for a full canister loading are acceptable under normal operating conditions. The results of the normal operating condition calculations are shown in Table 6.4-9. The final calculated k_{eff} values are shown for each assembly class. Comparison of the final calculated k_{eff} values shown for normal conditions in Table 6.4-9 to the accident condition k_{eff} values shown in Table 6.4-6 shows that the accident condition is more reactive (i.e., bounding) for all assembly classes. The USL values do not change between accident and normal operating conditions, so the calculated k_{eff} values may be compared directly to determine which case is more limiting with respect to criticality.

6.4.2.1.3.2 Partial Loading Analyses for the FuelSolutions™ W21M-LS Canister Design

A multiple package array partially loaded canister model under normal operating conditions is developed using the assumptions listed in Section 6.3.1. MCNP calculations are performed to demonstrate that the allowable ^{235}U enrichments calculated in Section 6.4.2.1.2 for a partial canister loading are acceptable for partially loaded canisters under normal operating conditions. The results of the calculations for the partially loaded canisters under normal operating conditions are shown in Table 6.4-10. The final calculated k_{eff} values are shown for each listed assembly class. These final k_{eff} values are compared to the k_{eff} values shown for accident conditions in Table 6.4-8. This comparison shows that for all assembly classes listed in Table 6.4-10, the accident condition case bounds the normal condition case with respect to the calculated k_{eff} value. As the USL values do not change between normal and accident conditions,

this means that the accident condition cases have less margin, and therefore are bounding, with respect to the criticality requirements.

6.4.2.1.4 Single Package

The single package models demonstrate that a FuelSolutions™ W21 canister remains adequately subcritical. The assumptions listed in Section 6.3.1 are used to develop the hypothetical accident and the normal conditions model for a single FuelSolutions™ W21 container. The Westinghouse 17x17 OFA fuel assembly type is selected as a representative fuel type for the single package model.

6.4.2.1.4.1 Hypothetical Accident Conditions Analyses for FuelSolutions™ W21 Canister Design

6.4.2.1.4.1.1 Full Loading Analyses for the FuelSolutions™ W21M-LS Canister Design

Using the assumptions listed in Section 6.3.1, a single package hypothetical accident condition model is developed assuming a full loading of assemblies using the Westinghouse 17x17 OFA fuel assembly type. MCNP calculations are performed using the single package hypothetical accident condition model and the results are compared to those from the multiple package array hypothetical accident condition calculations. The results from the single package hypothetical accident condition calculation are shown in Table 6.4-11. Based on the comparison of the results in Table 6.4-6 and Table 6.4-11 for full loadings under accident conditions, the multiple package array case bounds the single package case under hypothetical accident conditions.

6.4.2.1.4.1.2 Partial Loading Analyses for the FuelSolutions™ W21M-LS Canister Design

Using the assumptions listed in Section 6.3.1, a single package hypothetical accident condition model is developed assuming a partial loading of assemblies using the Westinghouse 17x17 OFA fuel assembly in the partial loading configuration for the FuelSolutions™ W21 canister. MCNP calculations are performed using this model and the results are compared to the results from the multiple package array, hypothetical accident condition, and partial loading configuration calculations. The results from this calculation are shown in Table 6.4-11. Based on the comparison of results in Table 6.4-8 and Table 6.4-11 for partial loadings under accident conditions, there is no statistically significant difference between the multiple package array case and the single package case for the partial loading configuration under hypothetical accident conditions.

6.4.2.1.4.2 Normal Operating Conditions Analyses for FuelSolutions™ W21 Canister Design

6.4.2.1.4.2.1 Full Loading Analyses for the FuelSolutions™ W21M-LS Canister Design

Using the assumptions listed in Section 6.3.1, a single package normal operating condition model is developed assuming a full loading of assemblies using the Westinghouse 17x17 OFA fuel assembly in the full loading configuration for the FuelSolutions™ W21 canister. MCNP

calculations are performed using the single package normal operating condition model and the results are compared to the results from the multiple package array normal operating condition calculation. The results from the single package normal operating condition calculation are shown in Table 6.4-11. Based on the comparison of results in Table 6.4-9 and Table 6.4-11 for full loadings under normal conditions, the multiple package array case bounds the single package case under normal operating conditions.

6.4.2.1.4.2.2 Partial Loading Analyses for the FuelSolutions™ W21M-LS Canister Design

Using the assumptions listed in Section 6.3.1, a single package partially loaded canister model is developed assuming a partial loading of assemblies using the Westinghouse 17x17 OFA fuel assembly in the partial loading configuration for the FuelSolutions™ W21 canister. MCNP calculations are performed using this model and the results are compared to those from the multiple package array, normal operating condition, and partial loading configuration calculations. The results from this calculation are also shown in Table 6.4-11. Based on the comparison of results in Table 6.4-10 and Table 6.4-11 for partial loadings under normal conditions, there is no statistically significant difference between the multiple package array case and the single package case for the partial loading configuration under normal operating conditions.

Table 6.4-1 - FuelSolutions™ W21 Canister Configuration Case Studies

Case	Description	^{235}U Enrichment (w/o)	k_{eff}	Uncertainty	$k_{eff}+2\sigma$
1	Westinghouse 17x17 OFA, HAC, 4.2 inch Spacer Plate Spacing	4.60	0.94832	0.00091	0.95014
2	Westinghouse 17x17 OFA, HAC, 4.6 inch Spacer Plate Spacing	4.60	0.94639	0.00098	0.94835
3	Westinghouse 17x17 OFA, HAC, 3.8 inch Spacer Plate Spacing	4.60	0.95054	0.00097	0.95248
4	Westinghouse 17x17 OFA, LS Basket Configuration	4.60	0.94025	0.00093	0.94211
5	Westinghouse 17x17 OFA, SS Basket Configuration	4.60	0.93917	0.00094	0.94105

Table 6.4-2 - Material and Fabrication Worst-Case Tolerance Results for the W21 Canister

Case	Description	^{235}U Enrichment (w/o)	k_{eff}	Uncertainty	$k_{eff}+2\sigma$
1	Westinghouse 17x17 OFA Tolerance Base Case	4.60	0.94025	0.00093	0.94211
2	BORAL® Thickness Tolerance	4.60	0.93759	0.00100	0.93959
3	BORAL® Width Tolerance	4.60	0.93790	0.00090	0.93970
4	Guide Tube ID Tolerance	4.60	0.93096	0.00098	0.93292
5	Guide Tube OD Tolerance	4.60	0.93536	0.00091	0.93718
6	Guide Tube Wrapper Tolerance	4.60	0.93935	0.00094	0.94123

Table 6.4-3 - Optimum Interspersed Moderator Cases Evaluated for the W21 Canister

Fuel Assembly Type/ ^{235}U Enrichment	Interspersed Moderator Density (g/cc)	Final k_{eff} ($k_{eff} + 2\sigma$)
Westinghouse 17x17 OFA, 4.6 w/o ^{235}U	1.0	0.94211
Westinghouse 17x17 OFA, 4.6 w/o ^{235}U	0.8	0.94180
Westinghouse 17x17 OFA, 4.6 w/o ^{235}U	0.6	0.94172
Westinghouse 17x17 OFA, 4.6 w/o ^{235}U	0.4	0.94161
Westinghouse 17x17 OFA, 4.6 w/o ^{235}U	0.1	0.94108
Westinghouse 17x17 OFA, 4.6 w/o ^{235}U	0.08	0.94106
Westinghouse 17x17 OFA, 4.6 w/o ^{235}U	0.04	0.94059
Westinghouse 17x17 OFA, 4.6 w/o ^{235}U	0.02	0.94022
Westinghouse 17x17 OFA, 4.6 w/o ^{235}U	0.00	0.94084

Table 6.4-4 - Optimum Interior Moderator Cases Evaluated for the W21 Canister

Fuel Assembly Type/ ^{235}U Enrichment[(1)]	Interior Moderator Density (g/cc)
Westinghouse 17x17 OFA, 4.6 w/o ^{235}U	1.0
Westinghouse 17x17 OFA, 4.6 w/o ^{235}U	0.8
Westinghouse 17x17 OFA, 4.6 w/o ^{235}U	0.6
Westinghouse 17x17 OFA, 4.6 w/o ^{235}U	0.4
Westinghouse 17x17 OFA, 4.6 w/o ^{235}U	0.1
Westinghouse 17x17 OFA, 4.6 w/o ^{235}U	0.08
Westinghouse 17x17 OFA, 4.6 w/o ^{235}U	0.04
Westinghouse 17x17 OFA, 4.6 w/o ^{235}U	0.02
Westinghouse 17x17 OFA, 4.6 w/o ^{235}U	0.00

Note:

(1) The enrichment shown is used for the fully loaded W21 canister interior moderator density calculations. For the partially loaded configuration, the analyses assume a W 17x17 OFA assembly enrichment of 4.9%

Table 6.4-5 - Fuel Rod Cladding Dimension Sensitivity Analyses

Case	Description	^{235}U Enrichment (w/o)	MCNP Calc. k_{eff}	Uncertainty	Final k_{eff} ($k_{eff} + 2\sigma$)
w21w17ofa46mlsd _1.21999	Westinghouse 17x17 OFA, Reference Case	4.60	0.94025	0.00093	0.94211
w21w17ofa46mlsd _+cladid_1.5693	Westinghouse 17x17 OFA, Increase Clad ID by 0.003"	4.60	0.94769	0.00102	0.94973
w21w17ofa46mlsd _-cladid_1.29493	Westinghouse 17x17 OFA, Decrease Clad ID by 0.003"	4.60	0.93418	0.00093	0.93604
w21w17ofa46mlsd _+cladod_1.3489	Westinghouse 17x17 OFA, Increase Clad OD by 0.01"	4.60	0.91558	0.00094	0.91746
w21w17ofa46mlsd _-cladod_1.26464	Westinghouse 17x17 OFA, Decrease Clad OD by 0.01"	4.60	0.9629	0.00094	0.96478

Table 6.4-6 - Multiple Package Array, Full Loading, Hypothetical Accident Condition Results to Determine Bounding Fuel Assembly Configurations (2 Pages)

Assembly Type	^{235}U Enrich. (w/o)	MCNP Calc. K_{eff}	Uncertainty	Final k_{eff} ($k_{eff}+2\sigma$)	Limiting USL	Criticality Margin
B&W 15x15 B & B2	4.70	0.93543	0.00093	0.93729	0.94278	0.00549
B&W 15x15 B3 & B5-B8	4.70	0.93552	0.00103	0.93758	0.94278	0.00520
B&W 15x15 B4	4.70	0.93820	0.00099	0.94018	0.94278	0.00260
B&W 15x15 (bounding)	4.70	0.93820	0.00099	0.94018	0.94278	0.00260
B&W 17x17 (bounding)	4.60	0.93700	0.00095	0.93890	0.94228	0.00338
CE 14x14	5.00	0.92002	0.00099	0.92200	0.94286	0.02086
CE 14x14 Ft. Calhoun	5.00	0.92049	0.00094	0.92237	0.94286	0.02049
CE 14x14 Maine Yankee	5.00	0.92359	0.00100	0.92559	0.94286	0.01727
CE 14x14 Westinghouse	5.00	0.92189	0.00097	0.92383	0.94286	0.01903
CE 14x14 ANF	5.00	0.91750	0.00094	0.91938	0.94286	0.02348
CE 14x14 (bounding)	5.00	0.92788	0.00097	0.92982	0.94286	0.01304
CE 14x14 A (bounding)	5.00	0.90987	0.00091	0.91169	0.94278	0.03109
CE Palisades Versions ABC	5.00	0.92000	0.00100	0.92200	0.94264	0.02064
CE Palisades Version D	5.00	0.91379	0.00099	0.91577	0.94264	0.02687
CE Palisades Versions EFG	5.00	0.91228	0.00099	0.91426	0.94264	0.02838
CE Palisades Versions HIJK	5.00	0.91161	0.00093	0.91347	0.94264	0.02917
CE Palisades Version L	5.00	0.91284	0.00107	0.91498	0.94264	0.02766
CE Palisades Versions M-Q	5.00	0.91191	0.00100	0.91391	0.94264	0.02873
CE Palisades Version R	5.00	0.90941	0.00102	0.91145	0.94264	0.03119
CE 15x15 P (bounding)	5.00	0.92340	0.00101	0.92542	0.94264	0.01722

Table 6.4-6 - Multiple Package Array, Full Loading, Hypothetical Accident Condition Results to Determine Bounding Fuel Assembly Configurations (2 Pages)

Assembly Type	^{235}U Enrich. (w/o)	MCNP Calc. k_{eff}	Uncertainty	Final k_{eff} ($k_{eff}+2\sigma$)	Limiting USL	Criticality Margin
CE 15x16 Yankee Rowe	5.00	0.84290	0.00094	0.84478	0.94206	0.09728
ANF 15x16 Yankee Rowe	5.00	0.84739	0.00097	0.84933	0.94206	0.09273
15x16 (bounding)	5.00	0.84739	0.00097	0.84933	0.94206	0.09273
15x16 A (bounding)	5.00	0.84195	0.00097	0.84389	0.94203	0.09814
CE 16x16 (bounding)	5.00	0.92314	0.00093	0.92500	0.94231	0.01731
Westinghouse 14x14 STD	5.00	0.91086	0.00101	0.91288	0.94269	0.02981
Westinghouse 14x14 OFA	5.00	0.92102	0.00093	0.92288	0.94269	0.01981
Westinghouse 14x14 B&W	5.00	0.90145	0.00095	0.90335	0.94269	0.03934
Westinghouse 14x14 ANF	5.00	0.90985	0.00096	0.91177	0.94269	0.03092
W 14x14 (bounding)	5.00	0.92102	0.00093	0.92288	0.94269	0.01981
Westinghouse 15x15 STD	4.70	0.93664	0.00090	0.93844	0.94274	0.00430
Westinghouse 15x15 OFA	4.70	0.93664	0.00090	0.93844	0.94274	0.00430
Westinghouse 15x15 B&W	4.70	0.93874	0.00093	0.94060	0.94274	0.00214
W 15x15 (bounding)	4.70	0.93931	0.00097	0.94125	0.94274	0.00149
W 15x15 A (bounding)	4.90	0.93890	0.00095	0.94080	0.94274	0.00194
Westinghouse 17x17 STD	4.70	0.93578	0.00096	0.93770	0.94224	0.00454
Westinghouse 17x17 B&W	4.70	0.93354	0.00094	0.93542	0.94224	0.00682
W 17x17 (bounding)	4.70	0.93598	0.00097	0.93792	0.94224	0.00432
W 17x17 A (bounding)	4.60	0.94025	0.00093	0.94211	0.94224	0.00013
W 17x17 B (bounding)	4.60	0.93769	0.00100	0.93969	0.94224	0.00255

Table 6.4-7 - PWR Assembly USL Value Ranges

USL Parameter	Parameter Range	USL Value Range
Pin Pitch (cm)	1.1887 - 1.4732	0.94203 - 0.94286
Enrichment (wt % ^{235}U)	4.60 - 5.00	0.94518 - 0.94555
Water-to-Fuel Volume Ratio	1.5530 - 2.0469	0.94362 - 0.94391
H-to-^{235}U Ratio	86.95 - 124.57	0.94413 - 0.94427

Table 6.4-8 - Multiple Package Array, Partial Loading, Hypothetical Accident Condition Results

Assembly Class	^{235}U Enrich. (w/o)	MCNP Calc. k_{eff}	Uncertainty	Final k_{eff} (k_{eff} +2σ)	Limiting USL	Criticality Margin
B&W 15x15	5.00	0.93531	0.00103	0.93737	0.94278	0.00541
B&W 17x17	4.90	0.93762	0.00092	0.93946	0.94228	0.00282
W 15x15	5.00	0.93879	0.00098	0.94075	0.94274	0.00199
W 15x15 A	5.00	0.93112	0.00095	0.93302	0.94274	0.00972
W 17x17	5.00	0.93569	0.00095	0.93759	0.94224	0.00465
W 17x17 A	4.90	0.94028	0.00093	0.94214	0.94224	0.00010
W 17x17 B	5.00	0.93666	0.00098	0.93862	0.94224	0.00362

Table 6.4-9 - Multiple Package Array, Full Loading, Normal Operating Condition Results

Assembly Class	^{235}U Enrichment (w/o)	MCNP Calc. K_{eff}	Uncertainty	Final k_{eff} (k_{eff} +2σ)
B&W 15x15	4.70	0.93513	0.00098	0.93079
B&W 17x17	4.60	0.93355	0.00096	0.93547
CE 14x14	5.00	0.92139	0.00100	0.92339
CE 15x15 P	5.00	0.92130	0.00096	0.92322
15x16	5.00	0.84417	0.00098	0.84613
15x16 A	5.00	0.83946	0.00092	0.84130
CE 16x16	5.00	0.91889	0.00092	0.92073
W 14x14	5.00	0.91724	0.00100	0.91924
W 15x15	4.70	0.93384	0.00096	0.93576
W 15x15 A	4.90	0.93448	0.00094	0.93636
W 17x17	4.70	0.93254	0.00095	0.93444
W 17x17 A	4.60	0.93795	0.00104	0.94003
W 17x17 B	4.60	0.93213	0.00095	0.93403

Table 6.4-10 - Multiple Package Array, Partial Loading, Normal Operating Condition Results

Assembly Class	^{235}U Enrichment (w/o)	MCNP Calc. k_{eff}	Uncertainty	Final k_{eff} (k_{eff} +2σ)
B&W 15x15	5.00	0.93110	0.00093	0.93296
B&W 17x17	4.90	0.93568	0.00094	0.93756
W 15x15	5.00	0.93666	0.00097	0.93860
W 15x15 A	5.00	0.92627	0.00098	0.92823
W 17x17	5.00	0.93044	0.00095	0.93234
W 17x17 A	4.90	0.93557	0.00098	0.93753
W 17x17 B	5.00	0.93856	0.00093	0.94042

Table 6.4-11 - MCNP Results for the Single Package Models

Case	Description	^{235}U Enrichment (w/o)	k_{eff}	Uncertainty	k_{eff} +2σ
1	Westinghouse 17x17 OFA, Hypothetical Accident Conditions, Full Loading Configuration	4.60	0.93968	0.00095	0.94158
2	Westinghouse 17x17 OFA, Hypothetical Accident Conditions, Partial Loading Configuration	4.90	0.93964	0.00097	0.94158
3	Westinghouse 17x17 OFA, Normal Operating Conditions, Full Loading Configuration	4.60	0.93734	0.00099	0.93932
4	Westinghouse 17x17 OFA, Normal Operating Conditions, Partial Loading Configuration	4.90	0.93468	0.00097	0.93662

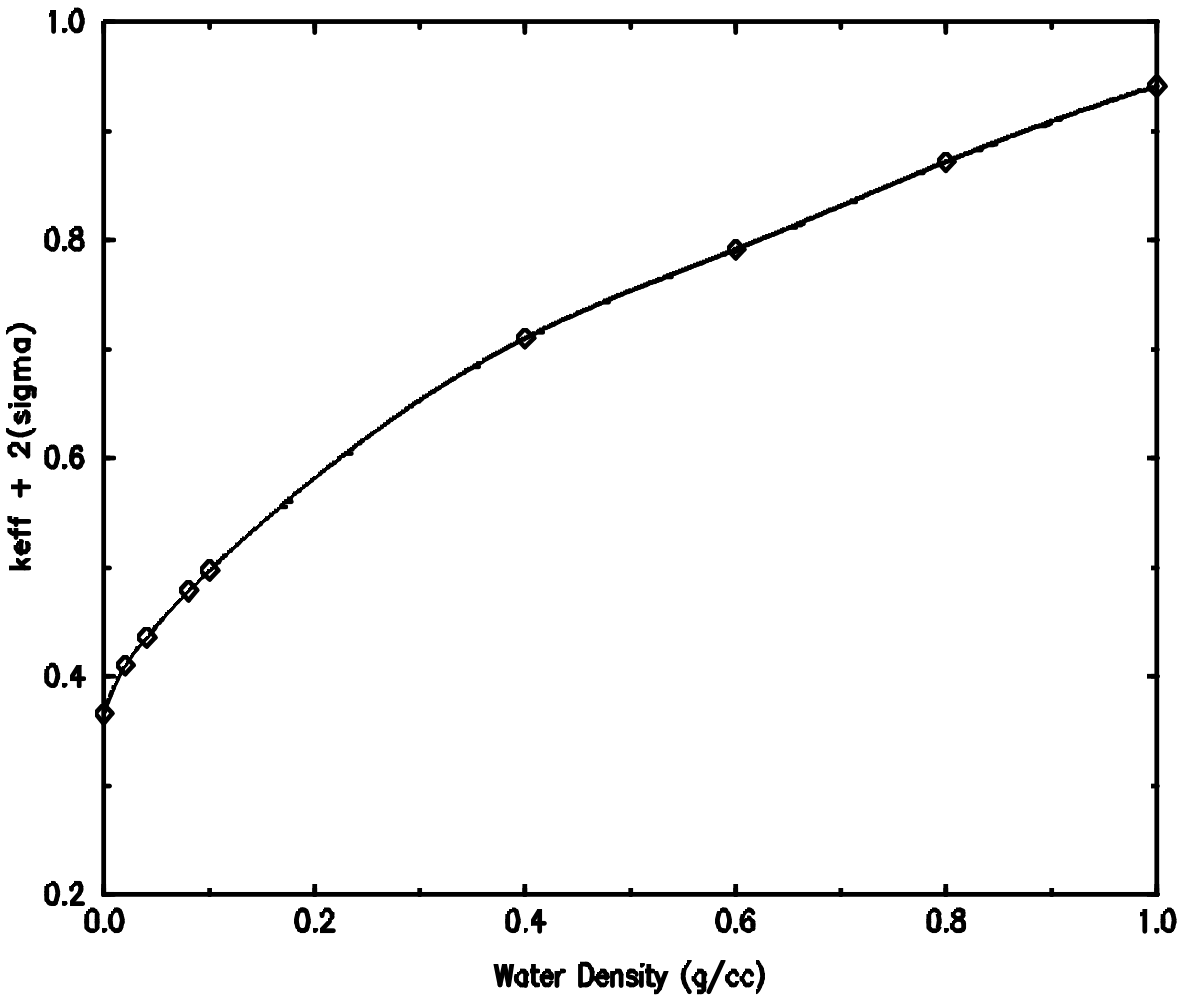

Figure 6.4-1 - MCNP Results for the W21 Canister Interior Moderator Density Calculations (Full Loading Configuration)

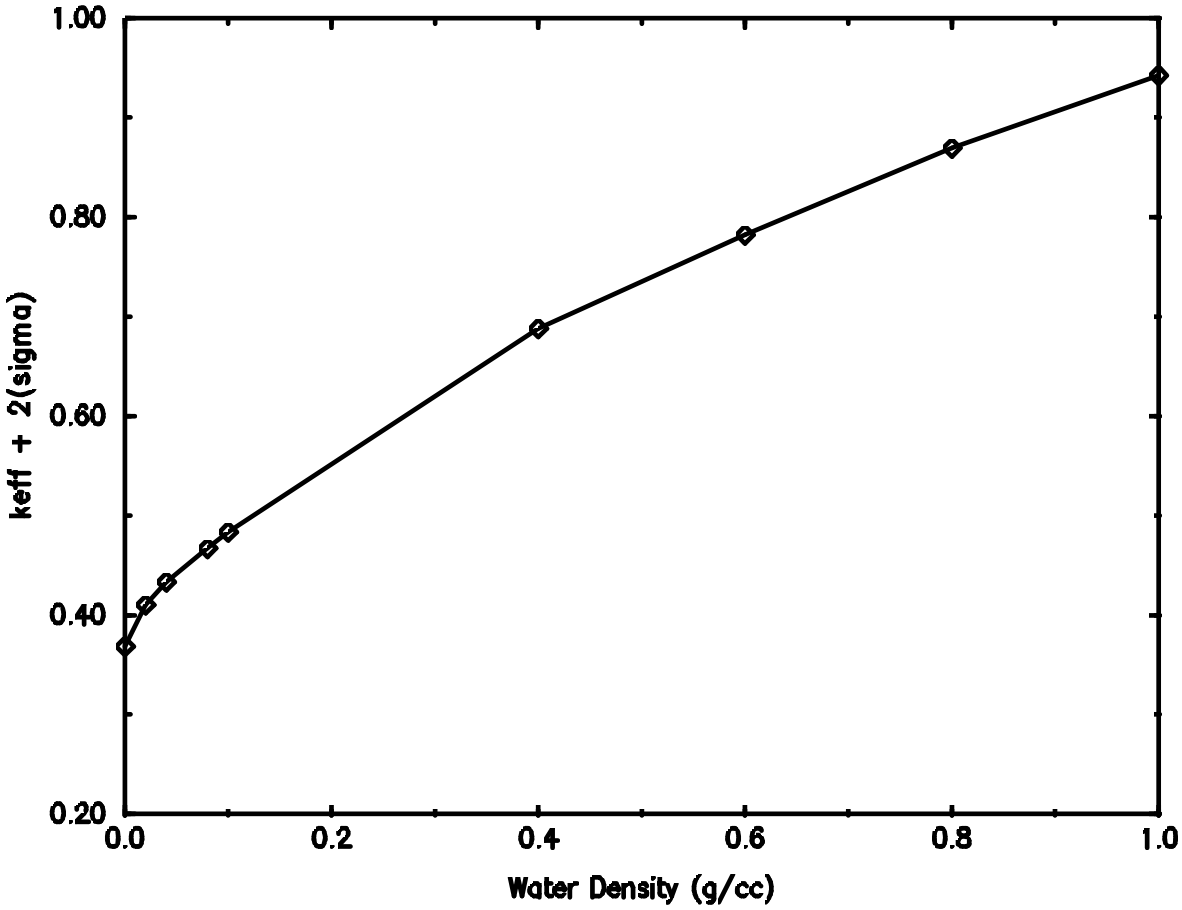

Figure 6.4-2 - MCNP Results for the W21 Canister Interior Moderator Density Calculations (Partial Loading Configuration)

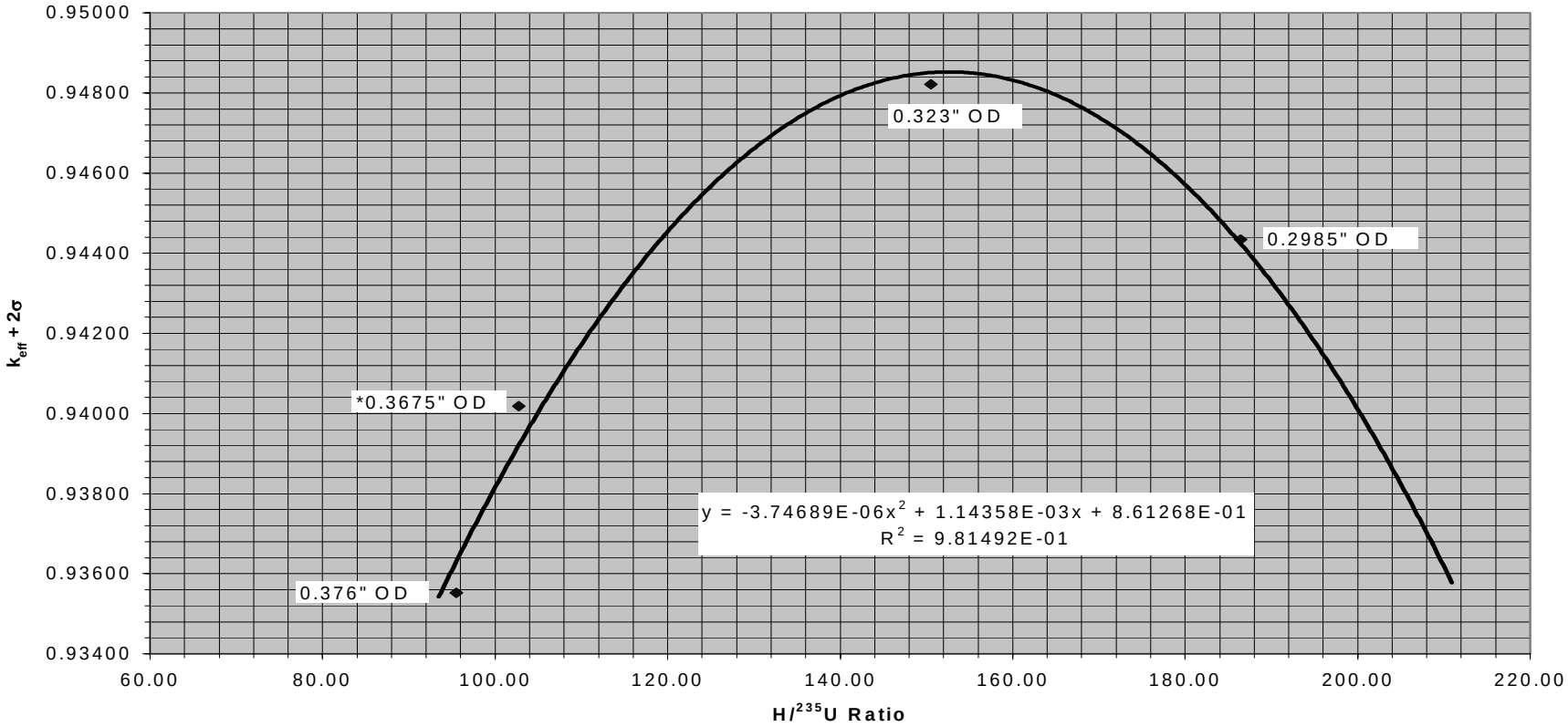

Figure 6.4-3 - Reactivity (k_{eff}) vs. H / U Ratio and Pellet O.D. for the B&W 15x15 Assembly Class

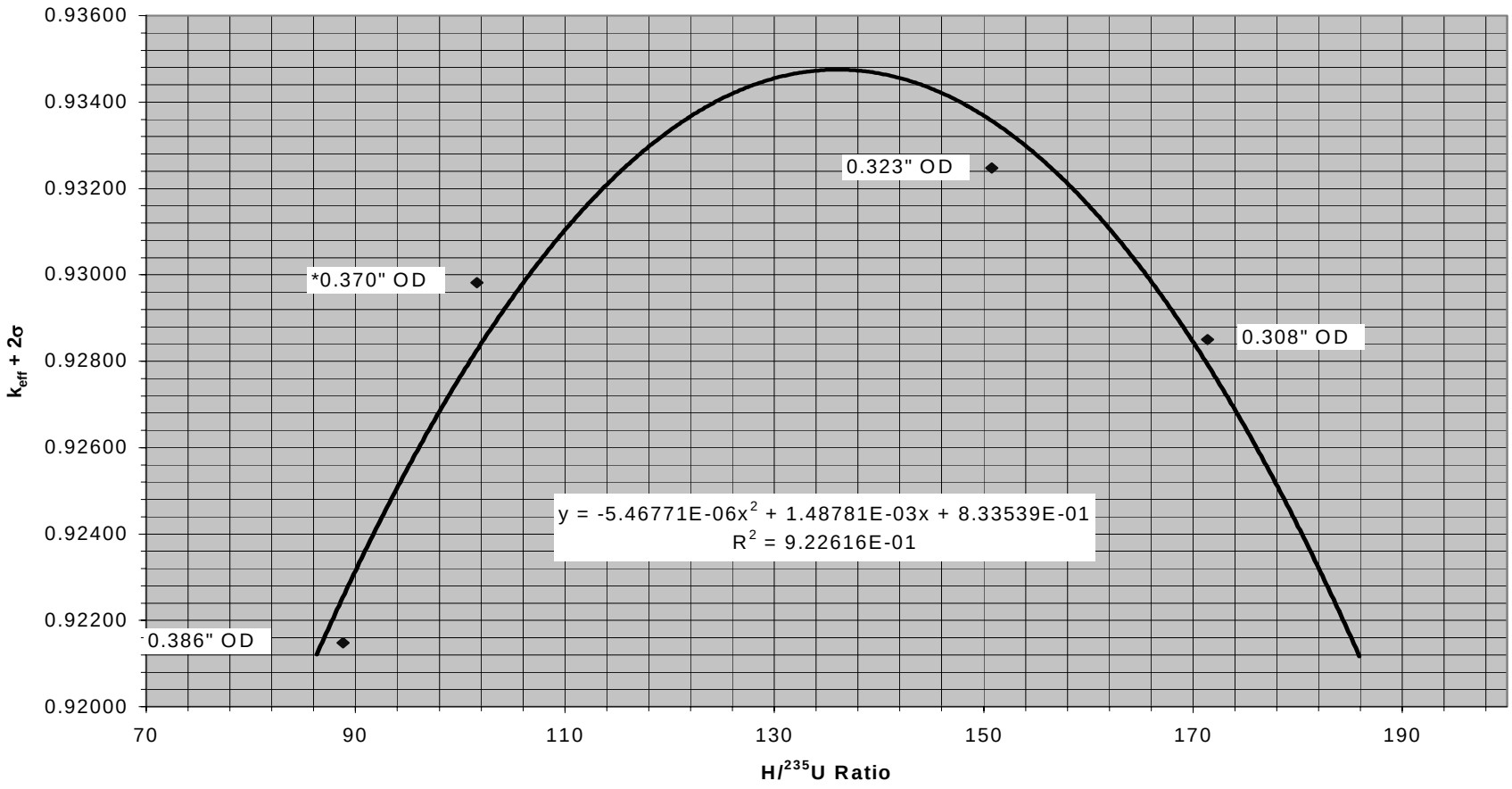

Figure 6.4-4 - Reactivity (k_{eff}) vs. H / U Ratio and Pellet O.D. for the CE 14x14 Assembly Class

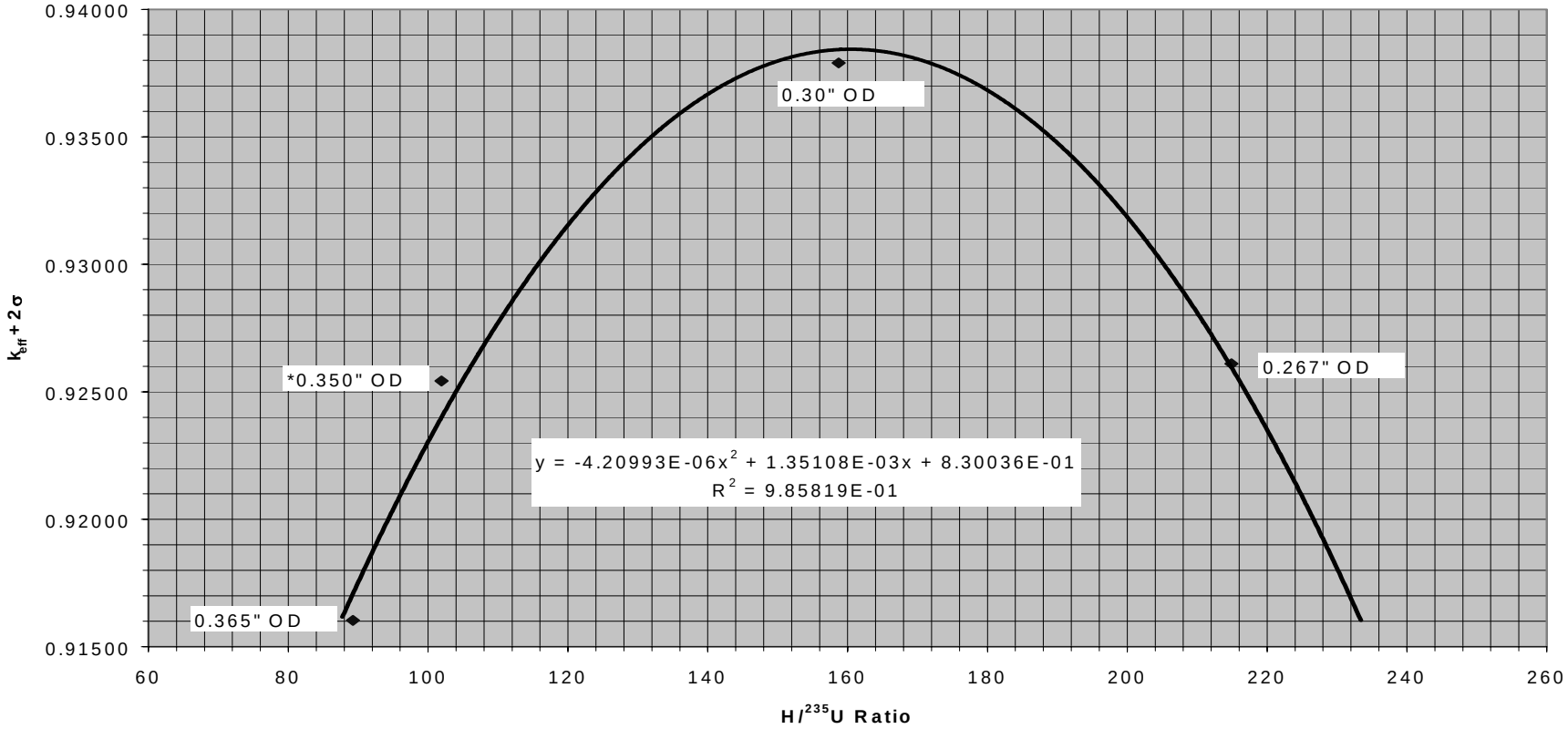

Figure 6.4-5 - Reactivity (k_{eff}) vs. H / U Ratio and Pellet O.D. for the CE 15x15 P Assembly Class

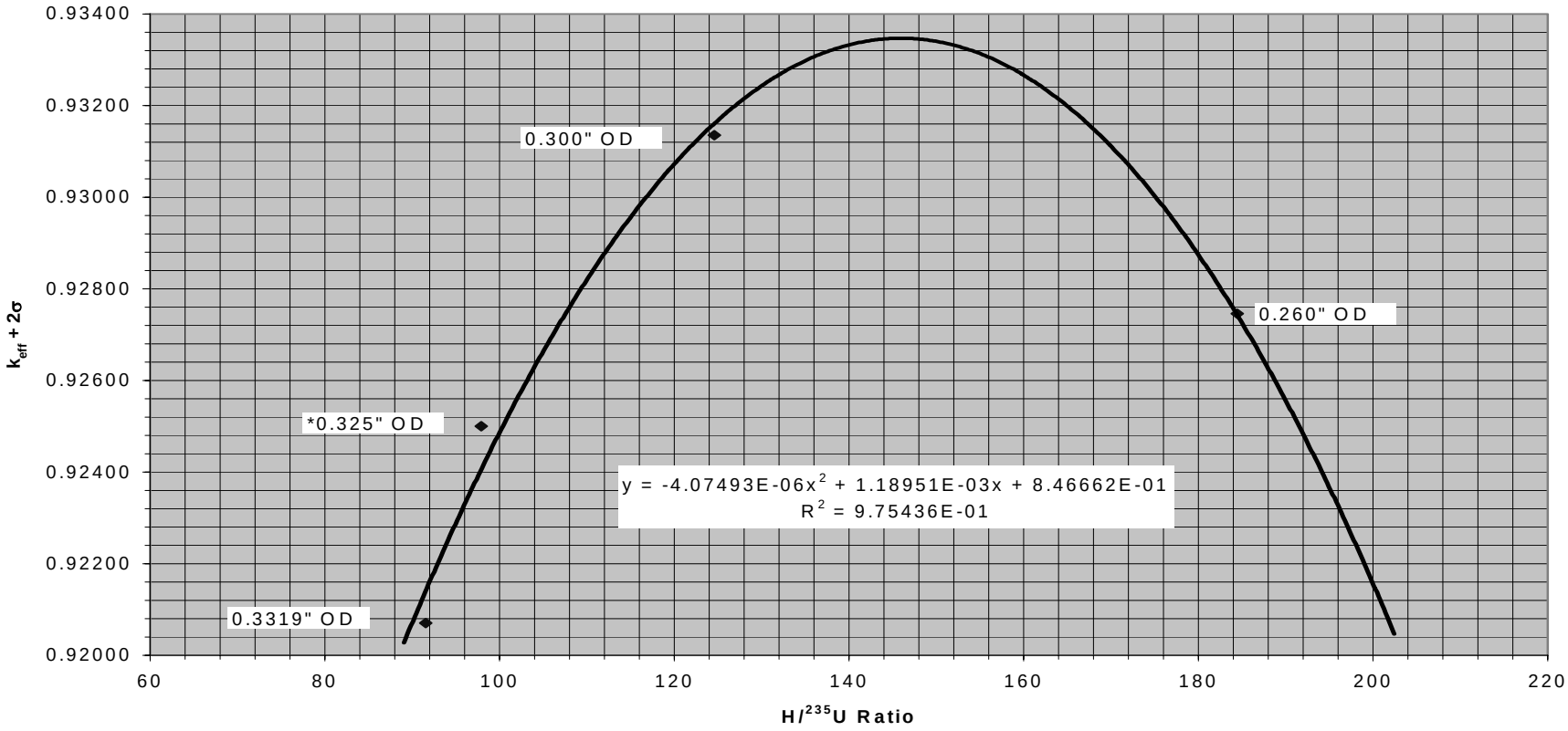

Figure 6.4-6 - Reactivity (k_{eff}) vs. H / U Ratio and Pellet O.D. for the CE 16x16 Assembly Class

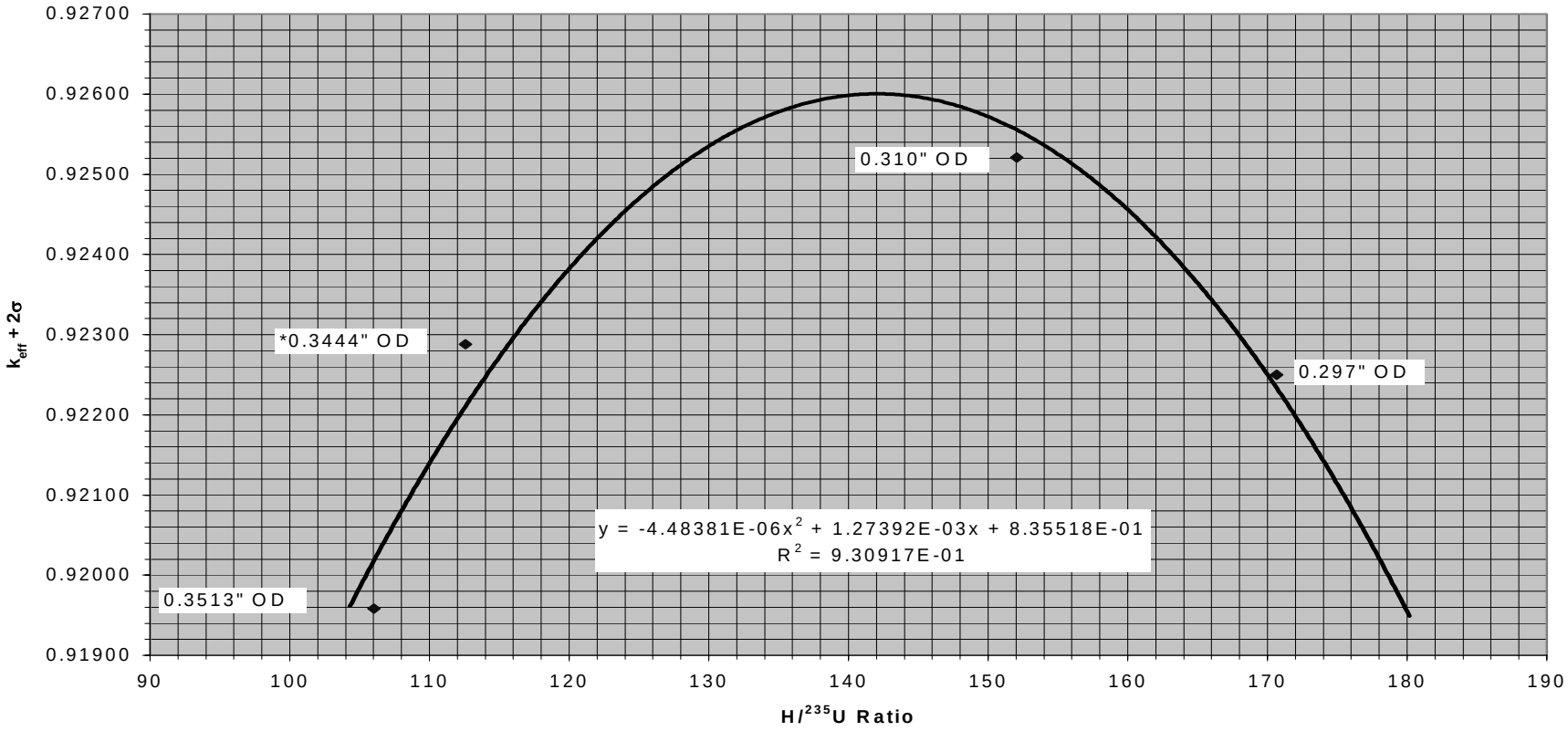

Figure 6.4-7 - Reactivity (k_{eff}) vs. H / U Ratio and Pellet O.D. for the W 14x14 Assembly Class

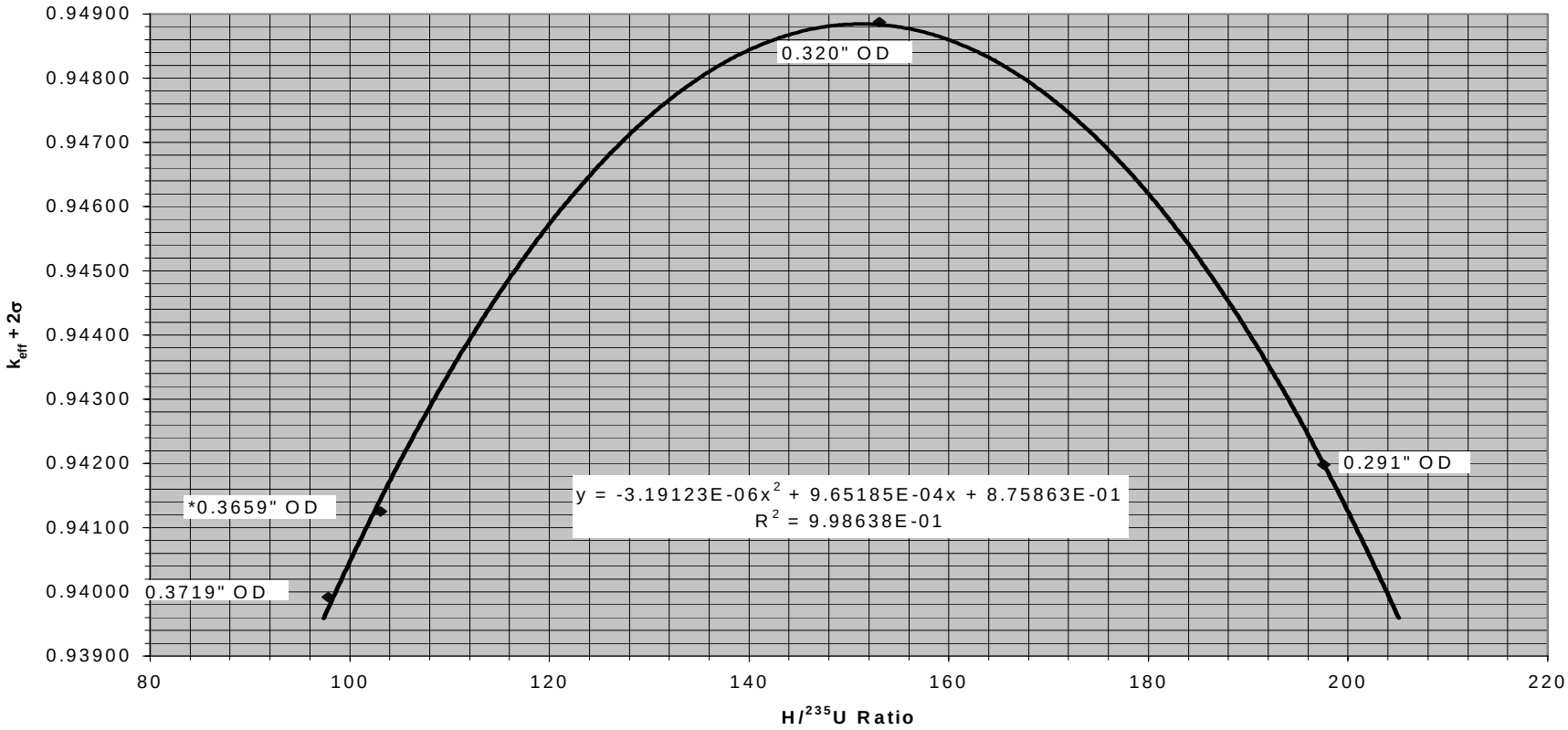

Figure 6.4-8 - Reactivity (k_{eff}) vs. H / U Ratio and Pellet O.D. for the W 15x15 Assembly Class

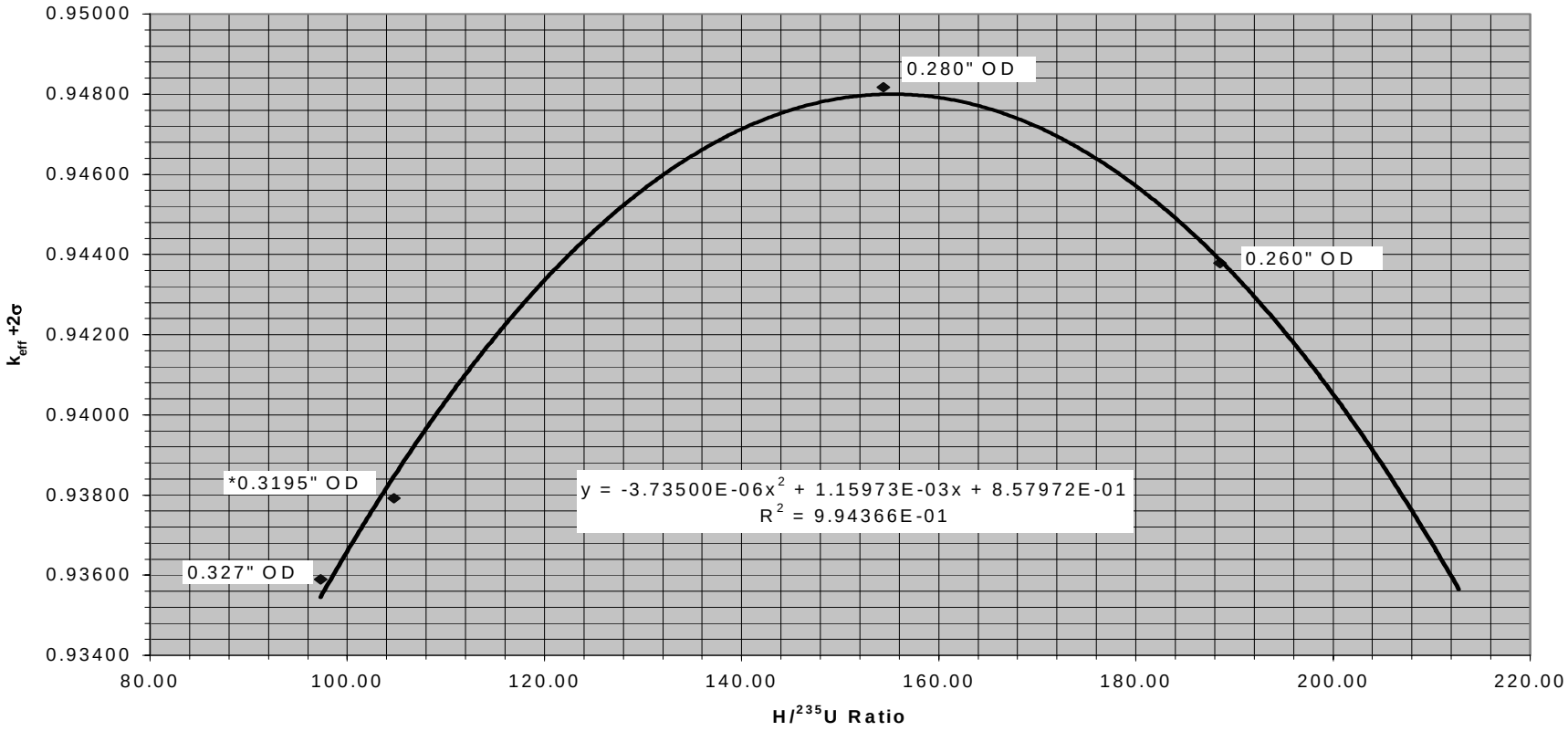

Figure 6.4-9 - Reactivity (k_{eff}) vs. H / U Ratio and Pellet O.D. for the W 17x17 Assembly Class

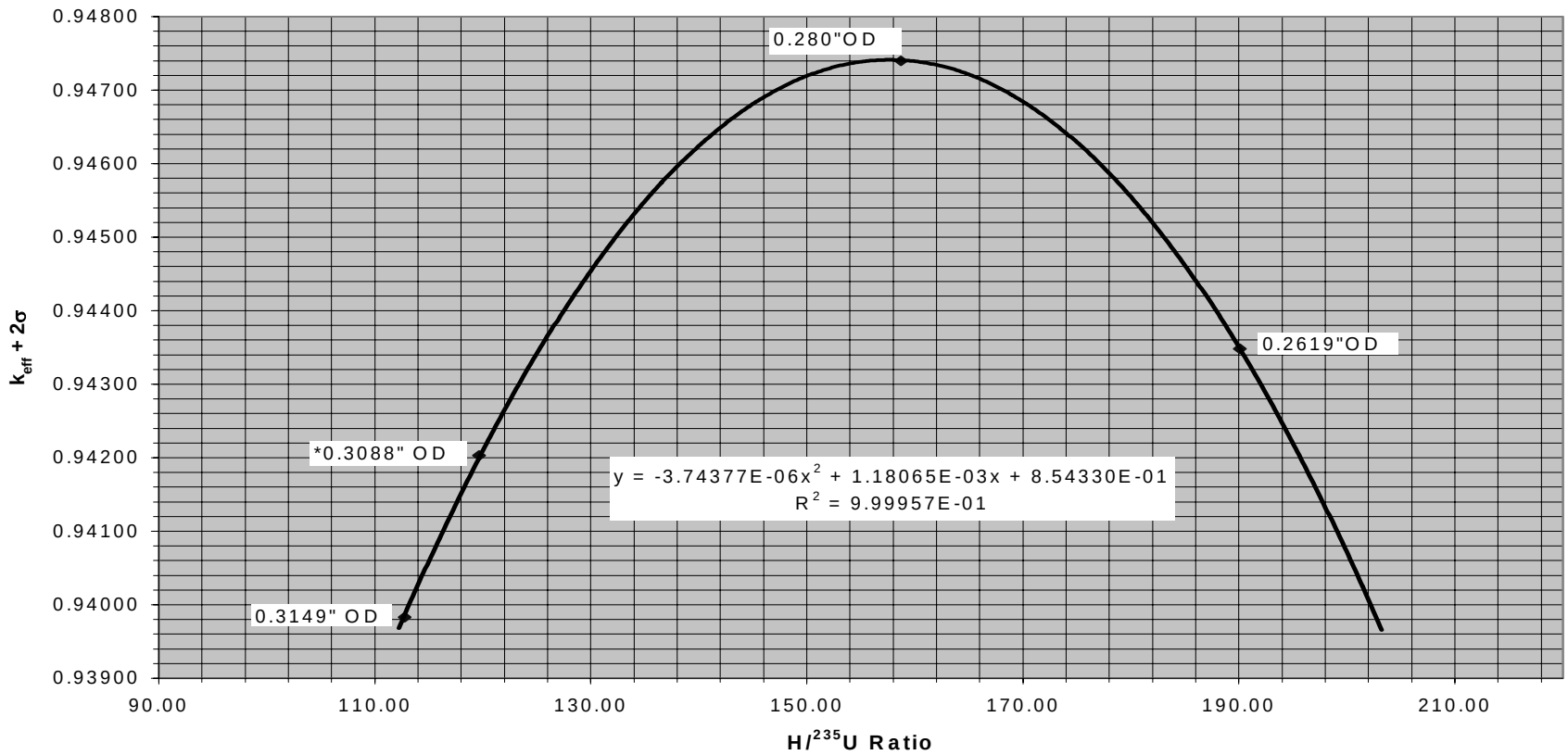

Figure 6.4-10 - Reactivity (k_{eff}) vs. H / U Ratio and Pellet O.D. for the W 17x17 A Assembly Class

6.5 Criticality Benchmark Experiments

The criticality calculation method is verified by comparison with critical experiment data that is sufficiently diverse to establish that the method bias and uncertainty will apply to canister conditions considered in the criticality analysis of the FuelSolutions™ system. A set of 49 critical experiments is analyzed using MCNP to demonstrate its applicability to criticality analysis and to establish a set of Upper Subcritical Limits (USLs) that define acceptance criteria. Benchmark experiments are selected with compositions, configurations, and nuclear characteristics that are comparable to those encountered in the FuelSolutions™ W21 containers loaded with fuel as described in Table 6.1-1. The experiments analyzed are summarized in Table 6.5-1. The critical experiments are described in detail in NUREG /CR-6361.[6]

Forty-nine critical benchmark cases are selected for their similarity to the FuelSolutions™ system casks and canisters. The cases include different combinations of fixed neutron absorber materials and reflector wall materials. Sixteen of the benchmark experiments have BORAL®, borated stainless steel, or unborated stainless steel absorbing plates with no reflecting walls. Twenty-five of the cases have steel or depleted uranium reflecting walls with no neutron absorbing panels. Five of the cases have both neutron absorbing panels and reflecting walls. Three of the cases are simple lattices without neutron absorbing panels or reflectors. The fuel pins in the experiments have enrichments of 2.35, 4.31, or 4.742 w/o ^{235}U. A comparison of FuelSolutions™ system attributes with these experiments demonstrates the wide range of applicability of the criticality calculation method.

A set of Upper Subcritical Limits is determined using the results from the 49 critical experiments and USL Method 1, Confidence Band with Administrative Margin, described in Section 4 of NUREG/CR-6361. The USL Method 1 applies a statistical calculation of the method bias and its uncertainty plus an administrative margin (0.05 Δk) to a linear fit of the critical experiment benchmark data. The USLs are determined as a function of the critical experiment system parameters; enrichment, water-to-fuel ratio, hydrogen-to-^{235}U ratio, and pin pitch.

- The following equation is determined for the USL as a function of enrichment:
  $USL = 0.94082 + (9.4676 \times 10^{-4})x$ for all x
  The applicable range for enrichment is $2.35 \leq x \leq 5.00$.

- The following equation is determined for the USL as a function of water-to-fuel ratio:
  $USL = 0.94272 + (5.8009 \times 10^{-4})x$ for all x
  The applicable range for water-to-fuel ratio is $1.44 \leq x \leq 3.88$.

- The following equation is determined for the USL as a function of hydrogen-to-^{235}U:
  $USL = 0.94458 - (3.6041 \times 10^{-6})x$ for all x
  The applicable range for hydrogen-to-^{235}U ratio is $80.895 \leq x \leq 398.7$.

[6] NUREG/CR-6361, *Criticality Benchmark Guide for Light-Water-Reactor Fuel in Transportation and Storage Packages*, Lichtenwalter, J. J., et al., March 1997.

- The following equation is determined for the USL as a function of pin pitch:
  $USL = 0.93854 + (2.9355 \times 10^{-3})x$ for $x < 2.412$
  $USL = 0.94562$ for $x \geq 2.412$
  The applicable range for pin pitch is $1.24 \leq x \leq 2.54$.

The preceding equations are used to determine a minimum USL for each fuel assembly type considered for use with the FuelSolutions™ W21 canister (see Table 6.1-1 and Table 6.2-1). USL values are calculated as a function of the various parameters presented above for each candidate fuel design. USL value ranges for each of the four analyzed assembly parameters are presented in Table 6.4-7. The data presented in Table 6.4-7 show that the pin pitch USL is the limiting USL value for all PWR fuel assemblies. Therefore, all final k_{eff} values calculated and presented in Section 6.4.2 are subtracted from the pin pitch USL values to yield the criticality margins for each analyzed case. The pin pitch USL values are calculated for each assembly type using the simple equation shown above and the pin pitch values presented for each PWR assembly type in Table 6.2-1.

The k_{eff} for a canister containing each specific fuel assembly type is compared to the minimum USL established for that fuel assembly to assure subcriticality. The following equation is used to develop the k_{eff} for the storage of fuel in the FuelSolutions™ W21 canister:

$$k_{eff} = k_{case} + 2\sigma_{k_{eff}}$$

where:

k_{case} = MCNP k_{eff} for a particular case of interest

$\sigma_{k_{eff}}$ = uncertainty in calculated MCNP k_{eff} for a particular case of interest

Table 6.5-1 - Benchmark Critical Experiments (2 Pages)

Name	k_{eff}	Sigma	Enrich	Pitch	H2O/Fuel	H/X	Plate	B (w/o)	Plate thick	Wall	Wall thick
nse71sq	0.99903	0.00110	4.74	1.26	1.823	110	-	-	-	-	-
nse71w1	0.99632	0.00115	4.74	1.26	1.823	110	-	-	-	-	-
nse71w2	0.99554	0.00108	4.74	1.26	1.823	110	-	-	-	-	-
p2438ba	1.00049	0.00096	2.35	2.032	2.918	398.7	B	28.7	0.713	-	-
p2438ss	0.99822	0.00092	2.35	2.032	2.918	398.7	SS	-	0.485	-	-
p2615ba	1.00007	0.00096	4.31	2.54	3.883	256.1	B	28.7	0.713	-	-
p2615ss	0.99893	0.00105	4.31	2.54	3.883	256.1	SS	-	0.485	-	-
p3314ba	0.99853	0.0011	4.31	1.892	1.6	105.4	B	28.7	0.713	-	-
p3314bc	1.00053	0.00112	4.31	1.892	1.6	105.4	B	31.9	0.231	-	-
p3314bs1	0.9967	0.001	2.35	1.684	1.6	218.6	SS	1.1	0.298	-	-
p3314bs2	0.9936	0.001	2.35	1.684	1.6	218.6	SS	1.6	0.298	-	-
p3314bs3	0.99733	0.00107	4.31	1.892	1.6	105.4	SS	1.1	0.298	-	-
p3314bs4	1.00069	0.00109	4.31	1.892	1.6	105.4	SS	1.6	0.298	-	-
p3314ss1	0.99508	0.00104	4.31	1.892	1.6	105.4	SS	-	0.302	-	-
p3314ss2	1.00132	0.00111	4.31	1.892	1.6	105.4	SS	-	0.302	-	-
p3314ss3	0.99387	0.00105	4.31	1.892	1.6	105.4	SS	-	0.485	-	-
p3314ss4	0.99837	0.00103	4.31	1.892	1.6	105.4	SS	-	0.485	-	-
p3314ss5	0.99454	0.00097	2.35	1.684	1.6	218.6	SS	-	0.302	-	-
p3314ss6	0.99928	0.00116	4.31	1.892	1.6	105.4	SS	-	0.302	-	-
p3602bb	0.99809	0.0011	4.31	1.892	1.6	105.4	B	30.4	0.292	SS	1.96
p3602bs1	1.00125	0.00096	2.35	1.684	1.6	218.6	SS	1.1	0.298	SS	1.32
p3602bs2	1.00064	0.00111	4.31	1.892	1.6	105.4	SS	1.1	0.298	SS	1.96
p3602n11	0.99677	0.00094	2.35	1.684	1.6	218.6	-	-	-	SS	-
p3602n12	0.99822	0.00094	2.35	1.684	1.6	218.6	-	-	-	SS	0.66
p3602n13	0.99767	0.00096	2.35	1.684	1.6	218.6	-	-	-	SS	1.68
p3602n14	0.99563	0.00098	2.35	1.684	1.6	218.6	-	-	-	SS	3.91

Table 6.5-1 - Benchmark Critical Experiments (2 Pages)

Name	k_{eff}	Sigma	Enrich	Pitch	H2O/Fuel	H/X	Plate	B (w/o)	Plate thick	Wall	Wall thick
p3602n21	0.99907	0.00091	2.35	2.032	2.918	398.7	-	-	-	SS	2.62
p3602n22	0.99895	0.00091	2.35	2.032	2.918	398.7	-	-	-	SS	0.66
p3602n31	1.00072	0.00106	4.31	1.892	1.6	105.4	-	-	-	SS	0
p3602n32	1.00028	0.00112	4.31	1.892	1.6	105.4	-	-	-	SS	0.66
p3602n33	1.00361	0.00117	4.31	1.892	1.6	105.4	-	-	-	SS	1.32
p3602n34	1.00233	0.00113	4.31	1.892	1.6	105.4	-	-	-	SS	1.96
p3602n35	1.00068	0.0011	4.31	1.892	1.6	105.4	-	-	-	SS	2.62
p3602n36	0.99925	0.00102	4.31	1.892	1.6	105.4	-	-	-	SS	5.41
p3602n41	1.00211	0.00103	4.31	2.54	3.883	256.1	-	-	-	SS	-
p3602n42	1.0016	0.00104	4.31	2.54	3.883	256.1	-	-	-	SS	1.32
p3602n43	1.00014	0.00107	4.31	2.54	3.883	256.1	-	-	-	SS	2.62
p3602ss1	1.00077	0.00101	2.35	1.684	1.6	218.6	SS	-	0.302	SS	1.32
p3602ss2	0.99815	0.0011	4.31	1.892	1.6	105.4	SS	-	0.302	SS	1.96
p2827u1	0.9955	0.00086	2.35	2.032	2.918	398.7	-	-	-	U	-
p2827u2	0.99426	0.00091	2.35	2.032	2.918	398.7	-	-	-	U	1.96
p2827u3	0.99946	0.00099	4.31	2.54	3.883	256.1	-	-	-	U	-
p2827u4	0.99939	0.00101	4.31	2.54	3.883	256.1	-	-	-	U	1.96
p3926u1	0.99408	0.00091	2.35	1.684	1.6	218.6	-	-	-	U	-
p3926u2	0.99664	0.00094	2.35	1.684	1.6	218.6	-	-	-	U	1.32
p3926u3	0.99786	0.00086	2.35	1.684	1.6	218.6	-	-	-	U	3.91
p3926u4	0.99799	0.00104	4.31	1.892	1.6	105.4	-	-	-	U	-
p3926u5	0.9994	0.00102	4.31	1.892	1.6	105.4	-	-	-	U	1.96
p3926u6	0.99896	0.0011	4.31	1.892	1.6	105.4	-	-	-	U	3.28

7. CONFINEMENT

Confinement of all radioactive materials in the FuelSolutions™ Storage System is provided by a FuelSolutions™ canister. The design of the FuelSolutions™ W21 canister confinement boundary assures that there is no credible design basis events that would result in a radiological release to the environment. The FuelSolutions™ W150 Storage Cask and W100 Transfer Cask are designed to provide physical protection for a FuelSolutions™ W21 canister during normal, off-normal, and postulated accident conditions, to assure that the integrity of the canister confinement boundary is maintained. The inert atmosphere in a FuelSolutions™ canister and the passive heat removal capabilities of the FuelSolutions™ W150 Storage Cask also assures that the SNF assemblies remain protected from degradation, which might otherwise lead to gross cladding ruptures during dry storage.

The structural adequacy of the canister is demonstrated by the analyses documented in Chapter 3 of this FSAR. The heat removal capabilities of the FuelSolutions™ W21 canister are demonstrated by the thermal analyses documented in Chapter 4 of this FSAR. The physical protection of a FuelSolutions™ canister provided by a FuelSolutions™ W150 Storage Cask and a W100 Transfer Cask is demonstrated by the structural analyses documented in Chapter 3 of the FuelSolutions™ Storage System FSAR.[1] Likewise, the heat removal capabilities of a FuelSolutions™ W150 Storage Cask and a W100 Transfer Cask are demonstrated by the thermal analyses documented in Chapter 4 of the FuelSolutions™ Storage System FSAR.

This chapter describes the FuelSolutions™ W21 canister confinement boundary design and describes how the design satisfies the confinement requirements of 10CFR72.[2] It also provides an evaluation of the consequences of releases from the FuelSolutions™ W21 canister for the design basis leakage rate in accordance with NUREG-1536[3] and ISG-5.[4]

---

[1] WSNF-220, *FuelSolutions™ Storage System Final Safety Analysis Report*, NRC Docket No. 72-1026, BNG Fuel Solutions.

[2] Title 10, U.S. Code of Federal Regulations, Part 72 (10CFR72), *Licensing Requirements for the Independent Storage of Spent Nuclear Fuel and High-Level Radioactive Waste*, 1995.

[3] NUREG-1536, *Standard Review Plan for Dry Cask Storage Systems*, U.S. Nuclear Regulatory Commission, January 1997.

[4] ISG-5, *Normal, Off-Normal, and Hypothetical Accident Dose Estimate Calculations for the Whole Body, Thyroid, and Skin*, Revision 1, Spent Fuel Project Office Interim Staff Guidance, United States Nuclear Regulatory Commission, May 1999.

This page intentionally left blank.

7.1 Confinement Boundary

The confinement boundaries for the fission products that are contained within the SNF assemblies include the fuel rod cladding itself, the FuelSolutions™ canister cylindrical shell, the bottom end closure, and the redundant top end closure. In addition, the FuelSolutions™ canister shell assembly provides for confinement of fixed and loose contamination, or CRUD (Chalk River Unidentified Deposits [debris/residue]), on the external surface of the fuel assemblies. The confinement boundary for the FuelSolutions™ canister is designed for the maximum allowable leak rate requirements defined in the *technical specification* contained in Section 12.3 of the FuelSolutions™ Storage System FSAR. The configuration of the FuelSolutions™ canister confinement boundary, which is the same for all FuelSolutions™ canister designs, is shown in Figure 7.1-1.

The FuelSolutions™ canister confinement boundary is comprised of the following:

- Cylindrical shell
- Bottom end closure plate (shop installed)
- Top end inner and outer closure plates (field installed)
- Instrument port cover (shop installed)
- Vent and drain port bodies (shop installed)
- Vent and drain port covers (field installed)
- Outer closure plate leak test port cover (shop installed)
- Associated welds.

The canister shell longitudinal and circumferential seam welds are full penetration welds. The bottom end closure plate is welded to the shell with a full penetration groove weld, which also forms part of the confinement boundary. The vent and drain port bodies are attached to the top end of the canister shell, although these attachment welds do not form part of the confinement boundary. The top end closure of the canister confinement boundary is installed following canister fuel loading.

After loading the FuelSolutions™ W21 canister with SNF, the inner closure plate is welded to the canister shell and to the vent and drain port bodies at the two openings in the inner closure plate. Following completion of FuelSolutions™ canister draining, vacuum drying, pressure and leak testing, and inerting operations, the vent and drain port covers are welded over the vent and drain ports to seal the FuelSolutions™ canister cavity. This completes the formation of the inner confinement boundary. The outer closure plate, including the shop welded leak test port cover, is welded to the canister shell using a partial penetration groove weld. This completes the formation of the outer (redundant) confinement boundary at the top end of the canister. The redundant closure of the FuelSolutions™ canister satisfies the requirements of 10CFR72.236(e).

7.1.1 Confinement Vessel

The FuelSolutions™ W21 canister cylindrical shell, the bottom end closure plate, the top end inner and outer closure plates, and the vent, drain, instrument, and leak test ports with their

associated covers comprise the confinement vessel. They are designed, fabricated, and tested in accordance with the applicable requirements of ASME Section III, Subsection NB,[5] using ASME Section II, Part D,[6] austenitic stainless steel, as discussed in Sections 2.1.2 and 2.5.1 of this FSAR.

The FuelSolutions™ canister cylindrical shell circumferential and longitudinal seam butt welds and bottom closure plate to shell weld are full penetration, 100% radiographically examined welds. These welds are pneumatic pressure tested to 125% of canister design pressure, in accordance with the applicable requirements of ASME Section III, Subsection NB.

The bottom shield plug enclosure, consisting of the shell extension and the bottom end plate, provides structural support for the bottom shield plug. This assembly provides biological shielding but has no confinement function.

The canister confinement vessel is sealed at the top end by inner and outer closure plates that are installed following canister SNF loading. The top shield plug, installed above the SNF and below the inner closure plate, provides biological shielding but has no confinement function.

The multiple-pass inner closure plate root pass and final surface and the multiple-pass outer closure plate root, intermediate, and final surface welds are dye penetrant inspected in accordance with the applicable requirements of ASME Section III, Subsection NB. A pneumatic pressure test of the inner closure plate welds is also performed. The inner closure plate welds are also helium leak tested to a sensitivity of 8.52×10^{-6} ref-cc/sec, using a calibrated detection system capable of detecting a leak rate less than or equal to one-half of the allowable test leakage rate. Canister leak testing is performed in accordance with the leak testing requirements defined in the *technical specification* contained in Section 12.3 of the FuelSolutions™ Storage System FSAR. Using helium as the test medium instead of water or air provides an additional degree of conservatism because of its relatively small molecular size.

Three port covers close the penetrations through the top end inner closure plate and one port cover closes the penetration through the outer closure plate, as described in Section 7.1.2. These port cover closure final surface welds are dye penetrant inspected in accordance with the applicable requirements of ASME Section III, Subsection NB.

After final vacuum drying, the FuelSolutions™ canister cavity is backfilled with helium in accordance with the *technical specifications* contained in Section 12.3 of this FSAR. The helium backfill provides an inert atmosphere within the FuelSolutions™ canister cavity that precludes oxidation and hydride attack of the SNF cladding. Use of a helium atmosphere within the FuelSolutions™ canister contributes to the long-term integrity of the fuel cladding, reducing the potential for release of fission gas or other products to the FuelSolutions™ canister cavity. Helium also aids in heat transfer within the FuelSolutions™ canister and reduces the fuel cladding maximum temperatures. Canister inerting, in conjunction with the thermal design features of the canister and storage cask, assures that the fuel assemblies are sufficiently

[5] American Society of Mechanical Engineers (ASME) Boiler and Pressure Vessel Code, Section III, Division 1, Subsection NB, *Class 1 Components*, 1995 Edition.

[6] American Society of Mechanical Engineers (ASME), Boiler and Pressure Vessel Code, Section II, *Materials*, Part D, "Properties," 1995 Edition.

protected against degradation, which might otherwise lead to gross cladding ruptures during long-term storage.

7.1.2 Confinement Penetrations

The top end inner closure plate has two through-holes to accommodate the vent and drain ports. Partial penetration groove welds join the inner closure plate with the vent and drain port bodies. The individual vent and drain ports are provided to pressurize, drain, dry, and backfill the FuelSolutions™ canister confinement vessel after installation of the inner closure plate. To minimize plant personnel occupational exposure, quick-connect fittings are used in the ports for connections made to the vacuum drying system.

The quick-connect fittings provide operator protection from airborne contamination that may be present within the canister cavity. The self-sealing feature of these fittings temporarily closes the confinement boundary when they are disconnected from their mating fitting. The quick-connect fittings are for operational convenience and ALARA, and are not relied on as part of the FuelSolutions™ canister confinement boundary.

After canister draining, vacuum drying, and inerting, the vent and drain ports are sealed by covers that are welded to the vent and drain port bodies. The port cover seal welds are dye penetrant inspected (final surface). An identical cover is welded by the fabricator to the inner closure plate over the instrument port. The instrument port weld is dye penetrant shop-inspected (final surface) and pressure tested. This instrumentation port is normally used during canister reflood operations only. These covers form part of the canister inner confinement boundary.

The top end outer closure plate has one penetration to accommodate potential leak testing of the outer closure plate, should it ever become necessary. The leak test port cover is welded to the outer closure plate in the shop during canister fabrication and is dye penetrant inspected (final surface). This cover forms part of the outer canister confinement boundary.

The FuelSolutions™ W21 canister has no bolted closures or mechanical seals. There are no external penetrations for pressure monitoring or overpressure protection. Such penetrations would increase the probability of a potential leakage path.

7.1.3 Seals and Welds

As previously noted, the FuelSolutions™ W21 canister shell seam welds, bottom closure weld, leak test port cover weld, and instrument port cover weld are made during shop fabrication, with the remaining top end closure welds made in the field following loading of the SNF into a FuelSolutions™ W21 canister.

Section 7.1.1 describes the design of the confinement vessel seals and welds. Confinement boundary welds performed by the fabricator include canister shell seam welds, the bottom end closure plate-to-shell weld, the leak test port cover to top end outer closure plate weld, and the instrument port cover to top end inner closure plate weld. Welds performed during field closure operations include the top end inner closure plate-to-shell weld, the vent and drain port body to inner closure plate welds, the vent and drain port cover welds, and the outer closure plate-to-shell weld.

Confinement boundary welds are performed, inspected, and tested in accordance with the applicable requirements of ASME Section III, Subsection NB. The use of multi-pass welds and dye penetrant inspection essentially eliminates the chance of a pin-hole leak through the weld. The shop welds and inner closure plate welds are also helium leak tested, providing added assurance of weld integrity. Shop fit-up of all field-welded components results in a uniform root opening of minimum size and eliminates the need for shims or backing that could restrain the weld joint and induce residual weld stresses. The ductile stainless steel material used for the canister confinement boundary is not susceptible to lamilar tearing or hydrogen-induced cracking. The closure weld redundancy assures that failure of any single FuelSolutions™ W21 canister confinement boundary closure weld does not result in release of radioactive material to the environment.

7.1.4 Closure

As discussed above, closure of the FuelSolutions™ W21 canister is provided by the inner and outer closure plates and the drain, vent, instrument, and leak test port covers. These canister closures are designed to maintain a positive seal during normal conditions of storage, off-normal conditions, and postulated accident conditions. There are no unique or special closure devices.

Since the FuelSolutions™ W21 canister uses an entirely welded redundant closure system, no direct monitoring of the closure is required, as discussed in Section 7.2 of the FuelSolutions™ Storage System FSAR.

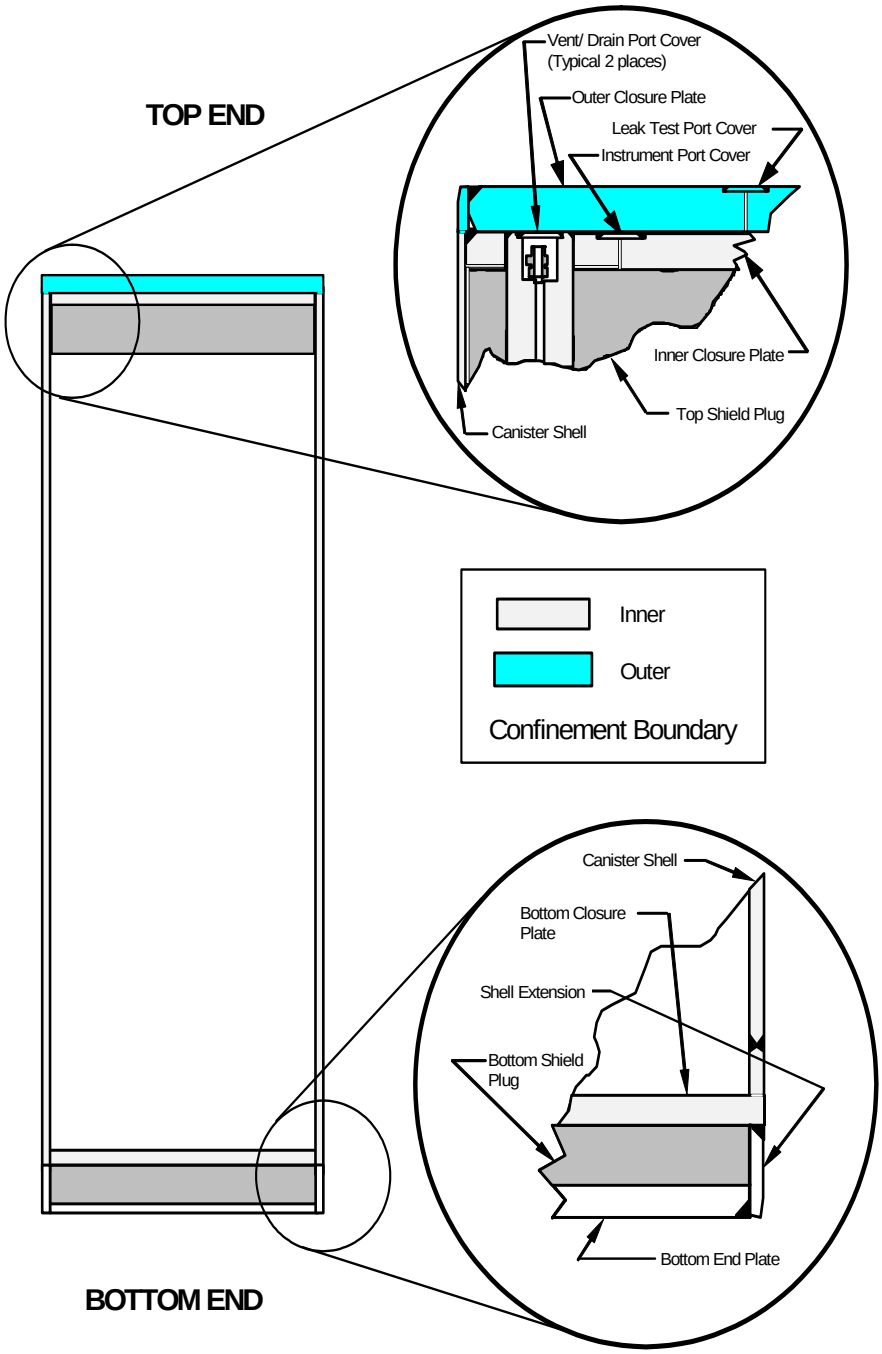

Figure 7.1-1 - FuelSolutions™ Canister Confinement Boundaries

This page intentionally left blank.

7.2 Requirements for Normal and Off-Normal Conditions of Storage

The FuelSolutions™ W21 canister uses multiple confinement barriers provided by the fuel cladding and the canister shell assembly to assure that there is no release of radioactive material to the environment. This includes no release of fuel fission gases, volatiles, or fines, or fuel CRUD for all normal, off-normal, and postulated accident storage conditions. Nonetheless, it is assumed that the canister leaks at the design leakage rate per the *technical specification* contained in Section 12.3 of the FuelSolutions™ Storage System FSAR. The performance of the FuelSolutions™ W21 canister confinement boundary for normal and off-normal conditions is discussed in this section.

7.2.1 Release of Radioactive Material for Normal and Off-Normal Conditions

7.2.1.1 Confinement Integrity During Dry Storage

As discussed in Section 2.2 of this FSAR, the SNF qualified for placement into the FuelSolutions™ W21 canister is limited to intact fuel assemblies with no known or suspected cladding failures greater than pinhole leaks or hairline cracks. Vacuum drying and helium backfilling provide a non-oxidizing atmosphere to protect the fuel assemblies against cladding degradation. The analyses presented in Section 3.5 and 3.6 of this FSAR demonstrate that the canister confinement boundary remains intact during all normal and off-normal storage and transfer conditions. The confinement boundary design, fabrication, inspection, and testing are performed under a QA program, which is described in Chapter 13 of the FuelSolutions™ Storage System FSAR. Therefore, there is no credible mechanism or event that results in a release of radioactive material from the FuelSolutions™ W21 canister under normal or off-normal conditions.

The consequences of leakage of the FuelSolutions™ W21 canister under normal conditions of storage are evaluated. The normal pressure of 10.0 psig that is defined in Section 2.3.1 of this FSAR is assumed as an initial condition for this evaluation. This pressure is based on the conservative assumption that 1% of the design basis fuel rods fail, and that 30% of the fission gas and 100% of the fill gas is released from each failed rod under the worst case temperature and backfill pressure conditions. The resulting Total Effective Dose Equivalent (TEDE), thyroid, and other critical organ doses at downstream distances of 100 to 1000 meters are evaluated.

The consequences of leakage of the FuelSolutions™ W21 canister under off-normal conditions of storage is also evaluated. The off-normal pressure of 20.0 psig that is defined in Section 2.3.2 of this FSAR is assumed as an initial condition for this evaluation. This pressure is based on the conservative assumption that 10% of the design basis fuel rods fail, and that 30% of the fission gas and 100% of the fill gas is released from each failed rod under the worst case temperature and backfill pressure conditions. The resulting Total Effective Dose Equivalent (TEDE), thyroid, and other critical organ doses at downstream distances of 100 to 1000 meters are evaluated.

The fission products which are available for release are discussed in Section 7.3.1 of this FSAR. The release of contents is described in Section 7.3.2, except that for normal conditions failure of 1% of the fuel rods is assumed, and for off-normal conditions failure of 10% of the fuel rods is assumed.

The resulting dose rates for normal and off-normal conditions are discussed in Section 7.2.3.

7.2.1.2 Control of Radioactive Material During Fuel Loading Operations

The procedures for closure of the FuelSolutions™ W21 canister, described in Section 8.1 of the FuelSolutions™ Storage System FSAR, are intended to assure that there is no unintended release of gas, liquid, or solid materials from the canister during dry storage. During canister closure operations, the hoses used for venting or draining are routed to the plant's spent fuel pool or radwaste processing systems. Canister closure operations are performed inside the plant's fuel building in a controlled and monitored environment. Radioactive effluent handling during fuel loading and canister draining, drying, backfilling, and sealing operations is in accordance with the plant's 10CFR50[7] license and radwaste management system.

7.2.1.3 External Contamination Control

The external surface of the FuelSolutions™ W21 canister is protected from contamination by preventing it from coming in contact with the spent fuel pool water. Prior to fuel loading, an inflatable seal is installed at the top of the annulus formed between the canister shell and the transfer or transportation cask cavity. This annulus is filled with clean demineralized water and the seal is inflated. The inflated seal, backed by the demineralized water, is sufficient to preclude the entry of contaminated water into the annulus. It is recommended that a small reservoir of water be connected to the transfer cask annulus port to maintain a slight overpressure in the canister/cask annulus. These steps assure that the canister surface is free of contamination that could become airborne during storage.

Additionally, following fuel loading operations and removal from the spent fuel pool, the upper end of the FuelSolutions™ W21 canister shell is surveyed for loose surface contamination in accordance with the *technical specification* contained in Section 12.3 of the FuelSolutions™ Storage System FSAR.

7.2.2 Pressurization of Confinement Vessel for Normal and Off-Normal Conditions

The FuelSolutions™ W21 canister normal condition pressure conservatively assumes that 1% of the design basis fuel rods fail, and that 30% of the fission gas and 100% of the fill gas escape into the canister cavity free volume from each failed rod under the worst case normal temperature, pressure, and volume conditions. The maximum operating pressure in the canister under normal conditions is 10.0 psig as defined in Section 2.3.1 of this FSAR, which considers the helium backfill pressure as well as the assumed rod failures. The normal condition pressure is also taken as the design pressure for determination of the pressure used for pressure and helium leak testing of the canister confinement boundary as follows:

$$P_{test} = P_{norm} \times 1.25 = 12.5 \text{ psig}$$

[7] Title 10, Code of Federal Regulations, Part 50 (10CFR50), *Domestic Licensing of Production and Utilization Facilities*, 1995.

The off-normal condition pressure assumes that 10% of the design basis fuel rods fail. The resulting off-normal canister pressure is within the design basis off-normal pressure of 20 psig, as defined in Section 2.3.2 of this FSAR.

7.2.3 Normal and Off-Normal Doses

The method used to calculate the dose rates resulting from the assumed normal and off-normal atmospheric release conditions is provided in Section 7.4.1 of the FuelSolutions™ Storage System FSAR.

The method for determination of the radionuclide release fraction is described in Section 7.4.1.7 of the FuelSolutions™ Storage System FSAR. For the FuelSolutions™ W21 canister, the minimum canister volume is 5.554×10^{6} cc as reported in Table 4.4-6 of this FSAR. The release from the canister to the environment is discussed in Section 7.3.2.6. The leak rate is 9.494×10^{-6} cc/s for normal conditions and 1.790×10^{-5} for off-normal conditions, and the duration is one year. The resultant canister release fraction is 5.39×10^{-5} for normal conditions and 1.02×10^{-4} for off-normal conditions.

Table 7.2-1 lists the calculated doses for the normal condition leakage of the FuelSolutions™ W21 canister loaded with 21 SNF assemblies. The TEDE, thyroid, and critical organ doses for distances from 100 m to 1000 m are also presented graphically in Figure 7.2-1. Similarly, the results for the off-normal condition are presented in Table 7.2-2 and Figure 7.2-2. The presented critical organ results correspond to the organ that yields the highest doses for normal and off-normal conditions, respectively. The lung is the limiting organ for the normal condition and the bone is limiting for the off-normal condition.

The results are reported for a single canister. Evaluation of off-site dose consequences for an ISFSI is provided in Section 10.4 of this FSAR.

Table 7.2-1 - Normal Condition Atmospheric Release Doses for FuelSolutions™ W21 Canister[1]

Distance, m	Dose (mrem)		
	TEDE	Thyroid	Other Organ[2]
100	0.8025	0.1757	4.3000
110	0.6075	0.1330	3.2550
120	0.4952	0.1084	2.6530
130	0.4246	0.0930	2.2750
150	0.3375	0.0739	1.8090
200	0.2244	0.0491	1.2020
300	0.1057	0.0231	0.5662
400	0.0637	0.0139	0.3413
500	0.0416	0.0091	0.2228
600	0.0334	0.0073	0.1791
700	0.0269	0.0059	0.1443
800	0.0195	0.0043	0.1045
900	0.0162	0.0035	0.0868
1000	0.0142	0.0031	0.0758

Notes:

(1) Doses are reported for a single canister for a duration of one year.

(2) The presented "Other Organ" results correspond to the lung, which is the critical organ that yields the highest doses at all distances for normal conditions.

Table 7.2-2 - Off-Normal Condition Atmospheric Release Doses for FuelSolutions™ W21 Canister[1]

Distance, m	Dose (mrem)		
	TEDE	Thyroid	Other Organ[2]
100	5.0290	0.4958	43.1300
110	3.8070	0.3753	32.6500
120	3.1030	0.3059	26.6200
130	2.6610	0.2623	22.8200
150	2.1150	0.2085	18.1400
200	1.4060	0.1386	12.0600
300	0.6622	0.0653	5.6790
400	0.3991	0.0394	3.4230
500	0.2605	0.0257	2.2340
600	0.2095	0.0207	1.7970
700	0.1688	0.0166	1.4480
800	0.1222	0.0121	1.0480
900	0.1015	0.0100	0.8706
1000	0.0887	0.0087	0.7607

Notes:

(1) Doses are reported for a single canister for a duration of one year.

(2) The presented "Other Organ" results correspond to the bone surface, which is the critical organ that yields the highest doses at all distances for off-normal conditions.

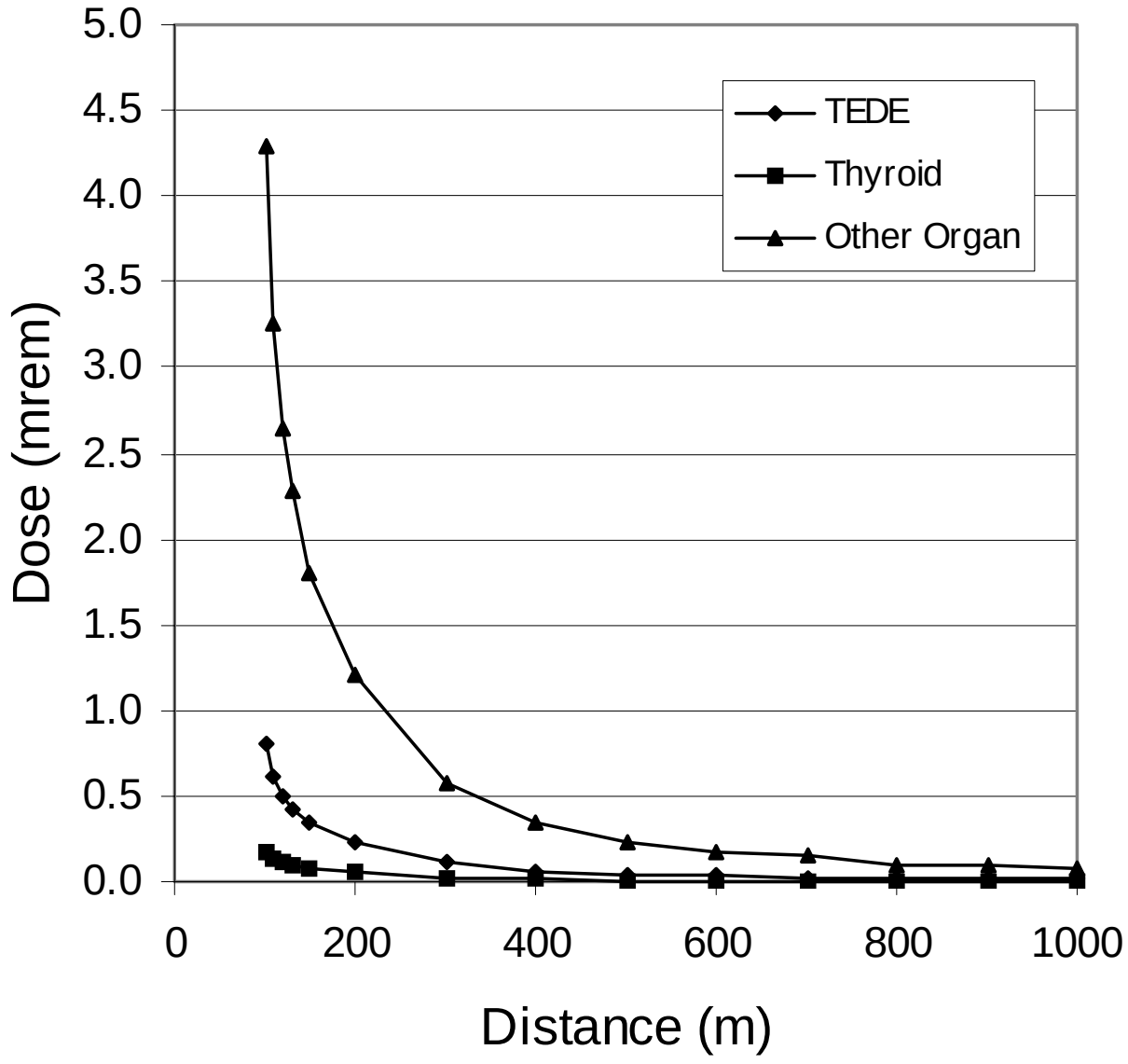

Figure 7.2-1 - Normal Condition Atmospheric Release Dose vs. Distance for FuelSolutions™ W21 Canister

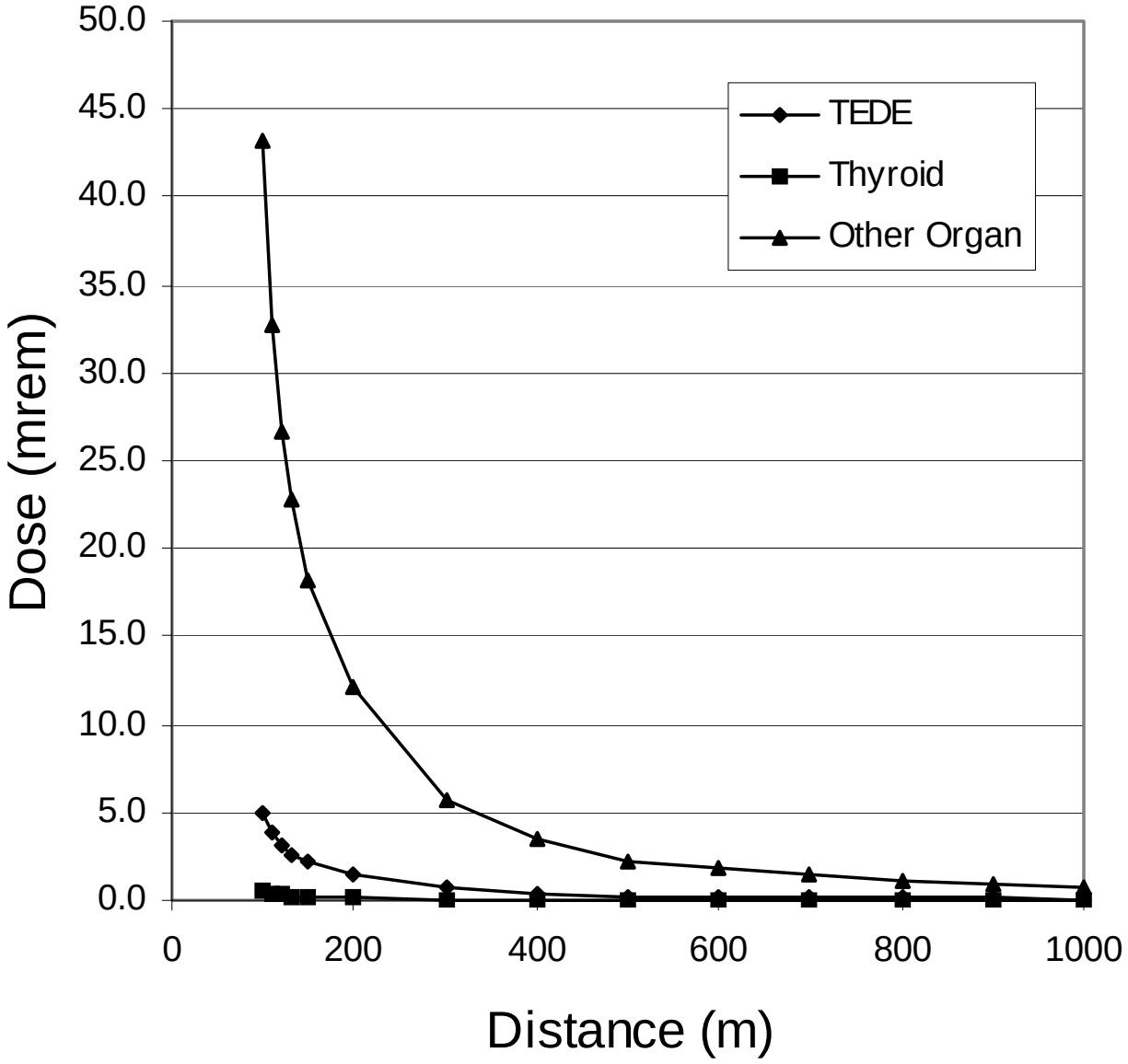

Figure 7.2-2 - Off-Normal Condition Atmospheric Release Dose vs. Distance for FuelSolutions™ W21 Canister

This page intentionally left blank.

7.3 Confinement Requirements for Hypothetical Accident Conditions

The FuelSolutions™ W21 canister shell assembly uses redundant confinement closures to assure that there is no release of radioactive materials, including fission gases or CRUD, for all postulated storage accident conditions. The analyses presented in Section 3.7 of this FSAR demonstrate that the canister confinement boundary remains intact during all postulated accident conditions, including the associated increased internal pressure. Canister confinement boundary design, fabrication, inspection, and testing are performed under a QA program, as described in Chapter 13 of the FuelSolutions™ Storage System FSAR. As discussed in Section 2.2 of this FSAR, the SNF qualified for placement into the FuelSolutions™ W21 canister is limited to intact fuel assemblies with no known or suspected cladding failures greater than pinhole leaks or hairline cracks. In summary, there is no credible mechanism or event that results in failure of the FuelSolutions™ W21 canister confinement boundary under accident conditions.

The consequences of leakage of the FuelSolutions™ W21 canister under accident conditions are evaluated for an atmospheric release from a single canister. The accident pressure of 70.0 psig that is defined in Section 2.3.3 of this FSAR is assumed as an initial condition for this evaluation. This accident pressure is based on the conservative assumption that 100% of the design basis fuel rods fail, and that 30% of the fission gas and 100% of the fill gas is released from each failed rod under the worst case temperature and backfill pressure conditions. The resulting Total Effective Dose Equivalent (TEDE) and thyroid doses at downstream distances of 100 to 1000 meters are evaluated. The ISFSI controlled area boundary must be at least 100 meters from the nearest loaded FuelSolutions™ W150 Storage Cask, in accordance with 10CFR72.106(b). The doses at these various distances are compared to the regulatory limit of 5 rem TEDE or 50 rem for the sum of the deep-dose equivalent and committed dose equivalent to any organ, per 10CFR72.106(b).

7.3.1 Fission Products

As described in Section 5.2.2 of the FuelSolutions™ Storage System FSAR, the ORIGEN2 program is used to calculate the fission products in the SNF assemblies. The FuelSolutions™ W21 canister is capable of accommodating up to 21 SNF assemblies of the classes defined in Section 2.2 of this FSAR. The evaluation provided herein uses a bounding analysis for fission products, as described in the following sections.

7.3.1.1 Fuel Fission Gases, Volatiles, and Particulates

The principal radionuclides available in the SNF are discussed in Section 7.4.1.1 and listed in Table 7.4-1 of the FuelSolutions™ Storage System FSAR.

The total fission product inventory for the radionuclides listed above is based on the total calculated concentrations for the fuel assembly class/type with the highest initial heavy metal content. This conservatively bounds all fuel assembly classes and types qualified for storage in

the FuelSolutions™ W21 canister. Using the DOE OCRWM database,[8] an initial heavy metal content is 0.471 MTU is bounding for all PWR fuel assemblies. All burnup/enrichment combinations from the fuel cooling tables in Section 5.2 of this FSAR are evaluated to determine the worst case contents of the important radionuclides. The worst case radionuclides occur for the case of 60 GWd/MTU and 1.5 w/o initial enrichment, with a lower bound cooling time of three years.

7.3.1.2 CRUD Radionuclides

As discussed in Section 7.4.1.1 of the FuelSolutions™ Storage System FSAR, the major radionuclide particulate present in the CRUD layer and available for aerosol entrainment and release is Co-60, with an activity at discharge of 140 μci/cm^2. This activity is decayed to account for three years post-irradiation cooling time, consistent with the worst case fuel assembly discussed above. The resulting curie content is 94.4 μci/cm^2. Using PWR fuel assembly information from the DOE OCRWM database, the worst case fuel assembly surface area is calculated (see Table 7.4-1 in Section 7.4.1) and applied to the curie loading, to determine the bounding Co-60 inventory for the SNF assembly classes to be stored in the FuelSolutions™ W21 canister. The maximum fuel assembly surface area is 411,240 cm^2 for the B&W 17x17 Mark C fuel assembly, for a total activity of about 39 curies per assembly. The activity is determined based on 21 assemblies.

7.3.2 Release of Contents

7.3.2.1 Fraction Available for Release

The fraction of radionuclides available for release from the SNF is provided in Section 7.4.1.2 and summarized in Table 7.4-1 of the FuelSolutions™ Storage System FSAR.

7.3.2.2 Fraction of Fuel Rods Breached

As discussed in Section 7.4.1.3 of the FuelSolutions™ Storage System FSAR, the fraction of fuel rods assumed to be breached is 1% for normal conditions and 10% for off-normal conditions.

7.3.2.3 Atmospheric Dispersion

The atmospheric dispersion factors (χ/Q) for various downwind distances are discussed in Section 7.4.1.4 and presented in Table 7.4-2 of the FuelSolutions™ Storage System FSAR.

7.3.2.4 Dose Conversion Factors

The exposure to dose conversion factors for the radionuclides considered in this evaluation are discussed in Section 7.4.1.5 and summarized in Table 7.4-3 of the FuelSolutions™ Storage System FSAR.

[8] RW-0184, *Fuel Assembly Data*, Department of Energy, Office of Civilian Radioactive Waste Management (OCRWM).

7.3.2.5 Event Duration and Occupancy Factor

As discussed in Section 7.4.1.6 of the FuelSolutions™ Storage System FSAR, the evaluation for the accident condition is performed for a duration of 30 days, with an assumed occupancy of 100%.

7.3.2.6 Canister Release Fraction

The method for determination of the radionuclide release fraction is described in Section 7.4.1.7 of the FuelSolutions™ Storage System FSAR. For the FuelSolutions™ W21 canister, the minimum canister volume is 5.554×10^{6} cc as reported in Table 4.4-6 of this FSAR. The leak rate for accident conditions is 5.463×10^{-5} cc/s, and the duration is 30 days. The resultant canister release fraction is 2.55×10^{-5}.

7.3.3 Postulated Accident Doses

The methodology used to calculate the postulated accident doses are provided in Section 7.4.1.8 of the FuelSolutions™ Storage System FSAR.

Table 7.3-1 lists the calculated doses for a single FuelSolutions™ W21 canister loaded with 21 SNF assemblies. The TEDE, thyroid, and critical organ doses from 100 to 1000 meters are also presented graphically in Figure 7.3-1.

7.3.4 Site Boundary

As can be seen from Figure 7.3-1, the TEDE dose rates for this postulated accident at the regulatory minimum site boundary distance of 100 meters is less than 2% of the accident limit of 5 rem specified in 10CFR72.106(b), and the dose to any organ is insignificant compared to the 10CFR72.106(b) limit of 50 rem.

As the total annual contribution at the site boundary for normal conditions is limited to 0.025 rem (evaluated in Section 10.4.1 of the FuelSolutions™ Storage System FSAR), the effect on the postulated accident dose at the site boundary is negligible (<1%).

Table 7.3-1 - Accident Condition Atmospheric Release Doses for FuelSolutions™ W21 Canister[1]

Distance, m	Dose (mrem)		
	TEDE	Thyroid	Other Organ[2]
100	81.19	6.83	750.80
110	62.24	5.23	575.60
120	52.23	4.39	483.00
130	41.50	3.49	383.70
150	30.49	2.56	281.90
200	23.34	1.96	215.90
300	10.92	0.92	100.90
400	6.19	0.52	57.23
500	4.55	0.38	42.11
600	3.46	0.29	31.95
700	2.43	0.20	22.43
800	2.26	0.19	20.93
900	1.83	0.15	16.93
1000	1.51	0.13	13.98

Notes:

(1) Doses are reported for a single canister for a duration of one month.

(2) The presented "Other Organ" results correspond to the bone surface, which is the critical organ that yields the highest doses at all distances for accident conditions.

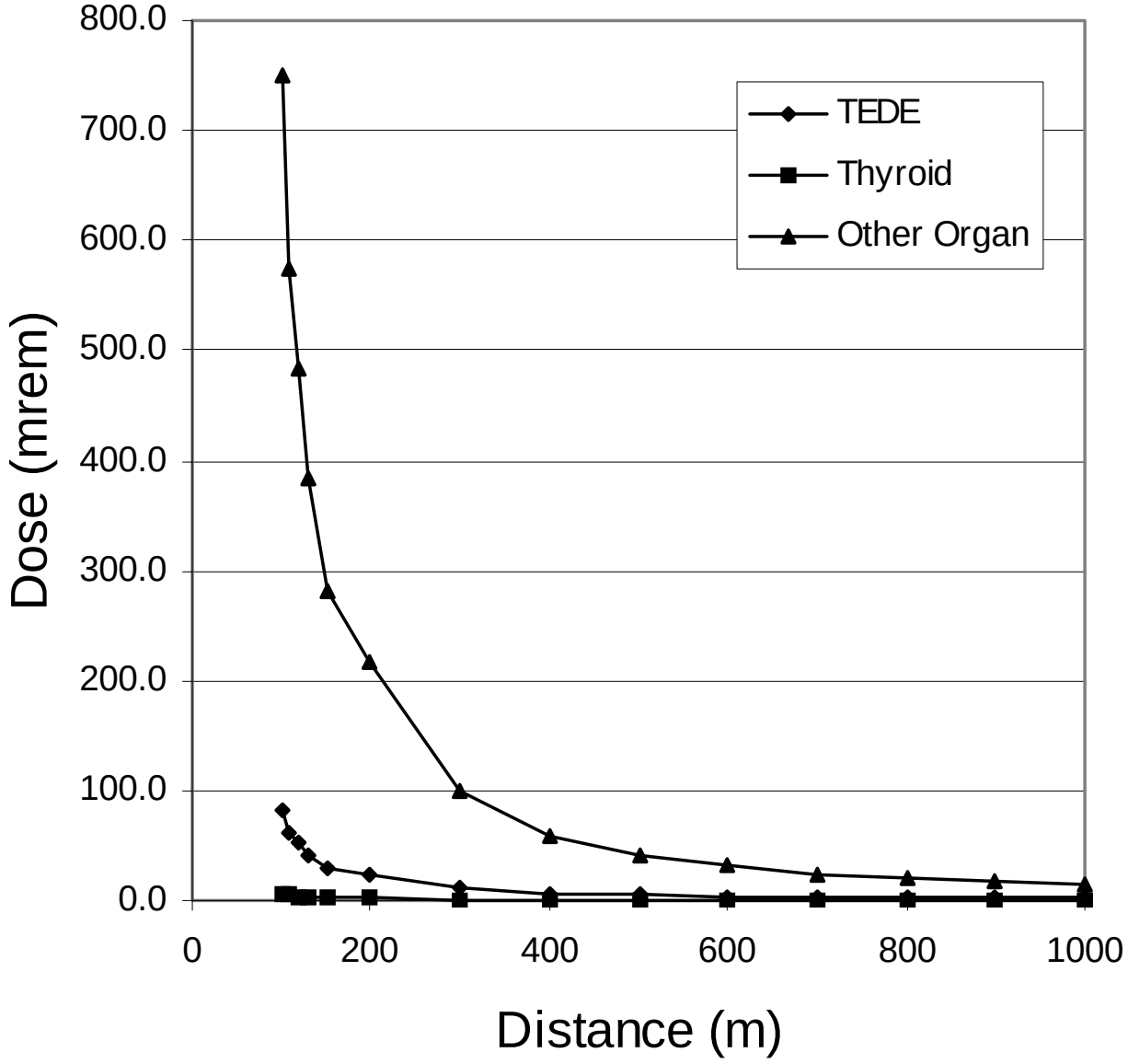

Figure 7.3-1 - Accident Condition Atmospheric Release Dose vs. Distance for FuelSolutions™ W21 Canister

This page intentionally left blank.

7.4 Supplemental Data

7.4.1 Calculation of Bounding Fuel Assembly Surface Area for Co-60 CRUD Contribution Evaluation

The radionuclide content of fuel CRUD contributes to the content of radionuclides available for release from the canister, as discussed in Section 7.3. The quantity available is a function of the activity of the CRUD in curies per unit area, as discussed in Section 7.3.1.2. Therefore, it is necessary to determine the total surface area of the fuel assembly on which it is expected CRUD will form, in order to determine the total radionuclide inventory.

The OCRWM database is used to obtain the fuel assembly characteristics to calculate the surface area for the fuels listed in Table 1.2-3 of this FSAR. Specifically, the OCRWM database contains information on the fuel rod length and outside diameter, as well as the number of rods in the assembly. This information is used to calculate the total surface area of the fuel rods. As information on the non-fuel hardware is not provided, the calculated fuel rod surface area is factored by 1.2 to conservatively account for the surface area of the non-fuel hardware. The area calculations are summarized in Table 7.4-1.

As discussed in EPRI NP-3789,[9] the formation of CRUD deposits is associated with heated surfaces. Since the fuel rod surface is heated to a much greater extent than much of the non-fuel hardware, anticipated CRUD buildup on the hardware would be expected to be less than on the fuel rods. Nonetheless, it is conservatively assumed that the CRUD activity on the non-fuel hardware is equal to that on the fuel rods.

[9] EPRI NP-3789, *Corrosion Product Buildup on LWR Fuel Rods*, Electric Power Research Institute, April 1985.

Table 7.4-1 - Fuel Assembly Surface Area Summary

Fuel Type	Rod Diameter (in)	Rod Length (in)	No. of Rods	Total Assembly Area (in^2)	Total Assembly Area (cm^2)
Yankee Rowe	0.365	96.47	240	31,857	205,529
Fort Calhoun	0.44	140.30	196	45,614	294,283
Palisades	0.417	141.17	225	49,933	322,148
CE 14x14	0.44	148.80	176	43,441	280,264
St. Lucie 2	0.382	148.08	236	50,327	324,690
WE 14x14	0.422	153.87	196	47,980	309,548
WE 15x15	0.424	153.51	225	55,209	356,186
WE 17x17	0.374	153.75	289	62,648	404,180
B&W 15x15	0.43	155.46	225	56,700	365,806
B&W 17x17	0.379	154.37	289	63,743	411,244
CE 16x16	0.382	162.80	236	55,329	356,961
CE 16x16 S80	0.382	162.75	231	54,141	349,296

8. OPERATING PROCEDURES

The operating procedures for the FuelSolutions™ W21 canister are provided in Chapter 8 of the FuelSolutions™ Storage System FSAR.[1] The specific information required for loading the FuelSolutions™ W21 canister is provided in Section 8.1.

[1]WSNF-220, *FuelSolutions™ Storage System Final Safety Analysis Report*, NRC Docket No. 72-1026, BNG Fuel Solutions.

This page intentionally left blank.

8.1 Procedures for Loading the Cask

The procedures for loading the cask provided in Section 8.1 of the FuelSolutions Storage System FSAR includes a requirement to backfill the canister with helium for the specific payload. The required helium backfill quantity for the FuelSolutions™W21 canister is provided in Table 8.1-1.

Table 8.1-1 - Helium Backfill Gas Quantities for the FuelSolutions™ W21 Canister (2 pages)

Fuel Assembly Class	Config-uration[1]	Average Payload Free Volume, $V_{PAYLOAD}$ (liters/ assembly)	Loading Specification W21-1[2]		Loading Specification W21-2[2]	
			Canister Free Volume, V_{FREE} (liters)	Canister Backfill Helium Quantity, m_{He} (grams)	Canister Free Volume, V_{FREE} (liters)	Canister Backfill Helium Quantity, m_{He} (grams)[3]
B&W 15x15	w/o CC	93.1	5729	870	5822	885
	w/ CC	101.0	5828	885	5929	900
B&W 17x17	w/o CC	89.9	5798	880	5888	895
	w/ CC	98.6	5878	890	5977	910
CE 14x14	w/o CC	73.5	5933	905	6007	920
	w/ CC	83.6	6193	945	6277	960
CE 16x16	w/o CC	80.8	6606	1010	6687	1020
	w/ CC	NA	NA	NA	NA	NA
CE 16x16 System 80	w/o CC	79.5	6625	1010	6705	1025
	w/ CC	NA	NA	NA	NA	NA
WE 14x14	w/o CC	78.4	5830	885	5908	900
	w/ CC	85.4	5892	895	5977	910
WE 15x15	w/o CC	87.0	5650	860	5737	875
	w/ CC	97.4	5641	855	5738	870
WE 17x17	w/o CC	91.6	5554	845	5646	860
	w/ CC	101.1	5826	885	5927	900
Fort Calhoun	w/o CC	80.2	5793	885	5873	895
	w/ CC	87.0	5650	860	5737	875
Palisades	w/o CC	81.1	5773	880	5854	895
	w/ CC	NA	NA	NA	NA	NA

Table 8.1-1 - Helium Backfill Gas Quantities for the FuelSolutions™ W21 Canister (2 pages)

Fuel Assembly Class	Config-uration[1]	Average Payload Free Volume, $V_{PAYLOAD}$ (liters/ assembly)	Loading Specification W21-1[2]		Loading Specification W21-2[2]	
			Canister Free Volume, V_{FREE} (liters)	Canister Backfill Helium Quantity, m_{He} (grams)	Canister Free Volume, V_{FREE} (liters)	Canister Backfill Helium Quantity, m_{He} (grams)[3]
St. Lucie 2	w/o CC	75.2	5897	900	5972	910
	w/ CC	85.3	6157	940	6242	950
Yankee Rowe	w/o CC	78.4	5831	895	5909	905
	w/ CC	NA	NA	NA	NA	NA

Table 8.1-1 Notes:

(1) Configuration includes with control components (w/ CC) and without control components (w/o CC).

(2) Fuel loading specifications W21-1 and W21-2 are defined in accordance with the *technical specifications* contained in Section 12.3.

(3) Tolerance: +/- 25 grams.

This page intentionally left blank.

9. ACCEPTANCE CRITERIA AND MAINTENANCE PROGRAM

This chapter summarizes the acceptance tests and maintenance program to be performed on the FuelSolutions™ W21 canister, which is classified as important to safety. These criteria for the FuelSolutions™ W150 Storage Cask and W100 Transfer Cask are described in Chapter 9 of the FuelSolutions™ Storage System FSAR.[1]

The following sections present the inspections and acceptance testing needed to demonstrate that a fabricated FuelSolutions™ W21 canister meets the design and code of construction requirements set forth in this FSAR. In addition, the periodic maintenance program describes the activities to be carried out to assure that the FuelSolutions™ W21 canister is maintained in proper working condition, so that it continues to perform its intended functions.

As used in the sections that follow, the term “preoperation” refers to that period of time from the receipt inspection of a FuelSolutions™ canister until it is actually loaded into a transfer cask for SNF assembly loading.

[1] WSNF-220, *FuelSolutions™ Storage System Final Safety Analysis Report*, NRC Docket No. 72-1026, BNG Fuel Solutions.

This page intentionally left blank.

9.1 Acceptance Criteria

This section discusses the inspections and acceptance tests that are to be performed prior to use of each FuelSolutions™ W21 canister with the associated FuelSolutions™ Storage System components. These inspections and tests provide assurance that the FuelSolutions™ W21 canister is fabricated and initially operated in accordance with the requirements set forth in this FSAR. The inspections and acceptance testing to be performed are intended to demonstrate that the FuelSolutions™ W21 canister, together with the interfacing FuelSolutions™ Storage System components, have been fabricated in accordance with the design and code of construction requirements contained in Section 2.1.2 of this FSAR.

These inspections and tests are also intended to demonstrate that the initial operation of the FuelSolutions™ Storage System using the FuelSolutions™ W21 canister complies with the applicable regulatory requirements and the *technical specifications* contained in Chapter 12 of this FSAR and the FuelSolutions™ Storage System FSAR. Noncompliances encountered during the required inspections and tests performed for the FuelSolutions™ W21 canister will be corrected or dispositioned to bring the item into compliance with this FSAR. This is done in accordance with the BNG Fuel Solutions (BFS) Quality Assurance program, discussed in Chapter 13 of the FuelSolutions™ Storage System FSAR, or the licensee's NRC-approved Quality Assurance program.

The FuelSolutions™ W21 canister is classified as important to safety. Individual canister components, assemblies, and piece parts are required to be designed, fabricated, and tested to the quality standards commensurate with the item's graded quality category. The quality categories for the FuelSolutions™ W21 canister components which are based on NUREG/CR-6407[2] are identified on the applicable drawings in Section 1.5.1 of this FSAR. The quality category assessments and the associated critical characteristics to be verified during procurement and fabrication will be developed in accordance with the BFS Quality Assurance program identified in Chapter 13 of FuelSolutions™ Storage System FSAR.

The testing and inspection acceptance criteria applicable to each FuelSolutions™ W21 canister are listed in Table 9.1-1 and discussed in more detail in the paragraphs that follow. These inspections and tests are intended to demonstrate that a canister has been fabricated and examined in accordance with the criteria contained in Section 2.1.2 of this FSAR.

[2] NUREG/CR-6407, *Classification of Transportation Packaging and Dry Spent Fuel Storage System Components According to Importance to Safety*, U.S. Nuclear Regulatory Commission, February 1996.

Table 9.1-1 - FuelSolutions™ W21 Canister Inspection and Test Acceptance Criteria (2 Pages)

Function	Method of Verification		
	Fabrication	Preoperation	Maintenance
Visual Inspection and Nondestructive Examination (NDE)	a) Assembly and examination of canister components per ASME Code, Section III, Subsections NB[3] and NG.[4] b) A dimensional inspection of the internal basket assembly will be performed prior to insertion into the canister shell to verify compliance with design requirements. c) A dimensional inspection of the top end shield plug and inner and outer closure plates and the bottom end shield plug and closure and end plates will be performed prior to inserting into the canister shell to verify compliance with design requirements. d) NDE of weldments will be defined on the drawings using standard American Welding Society[5] NDE symbols and/or notations. e) Cleanliness of the canister will be verified upon completion of fabrication per NQA-1. f) The protection of the canister at the completion of fabrication will be verified per NQA-1.	a) The canister will be visually inspected prior to placement in service at the licensee's facility. b) Canister protection at the licensee's facility will be verified. c) Canister cleanliness and exclusion of foreign material will be verified prior to placing in the spent fuel pool.	None.
Structural	a) Assembly and welding of canister components will be performed per ASME Code, Subsections NB and NG. b) Materials analysis (steel, lead, etc.) will be performed and records will be kept in a manner commensurate with "important to safety" classifications. c) ASME Code NB-6000 pressure tests of all canister pressure boundary shop welds will be performed.	None.	a) ASME Code NB-6000 pressure tests of inner closure plate to canister shell and vent and drain port field welds will be performed after closure welding.

[3] American Society of Mechanical Engineers (ASME) Boiler and Pressure Vessel Code, Section III, Division 1, Subsection NB, *Class 1 Components*, 1995 Edition.

[4] American Society of Mechanical Engineers (ASME) Boiler and Pressure Vessel Code, Section III, Division 1, Subsection NG, *Core Support Structures*, 1995 Edition.

[5] American Welding Society (AWS) D1.1-96, *Structural Welding Code - Steel*, 1996.

Table 9.1-1 - FuelSolutions™ W21 Canister Inspection and Test Acceptance Criteria (2 Pages)

Function	Method of Verification		
	Fabrication	Preoperation	Maintenance
Leak Tests	a) Helium leak rate testing will be performed on all canister pressure boundary shop welds. b) Soap bubble leak test of installed vent/drain port quick connect fittings.	None.	a) Helium leak rate testing will be performed on inner closure plate to canister shell and vent and drain port field welds after closure welding.
Criticality Safety	a) The boron content will be verified at the time of neutron absorber material manufacture.	None.	None.
Shielding Integrity	a) Material compliance will be verified through CMTRs. b) Verification that no unacceptable voids exist in the lead or depleted uranium shield will be made using gamma scan. c) Dimensional verification of top and bottom shield plug thickness will be performed.	None.	None.
Thermal Acceptance	None.	None.	a) Periodic monitoring will be performed during operation.
Functional Performance Tests	a) Fit-up of the following components is to be tested during fabrication: – Top shield plug – Inner top closure plate and vent/drain port covers – Outer top closure plate. b) A functional leak test of the quick connect fittings installed in the vent and drain port openings. c) A gauge test of all basket guide tubes.	a) Fit-up of the following components is to be verified during preoperation: – Top shield plug – Inner top closure plate – Outer top closure plate.	None.
Canister Identification Inspections	a) Verification of identification marking applied at completion of fabrication.	a) Identification marking will be checked for legibility during preoperation.	None.

9.1.1 Visual Inspection and Nondestructive Examination

The structural, thermal, shielding, criticality safety, and functional performance of the FuelSolutions™ W21 canister is assured by the verification of material properties, fabrication processes, and dimensions. Documentation prepared during canister fabrication is to provide evidence that materials and fabrication comply with the design requirements. The required inspections to be performed to assure canister performance include the following:

1. The FuelSolutions™ W21 canister assemblies and piece parts are to be fabricated and examined in accordance with the codes and standards used for design and construction, as described in Section 2.1.2 of this FSAR. Non-destructive examinations (NDE) of welds specified on the approved design drawings are to be performed in accordance with approved procedures, detailed on a weld inspection plan, and performed by inspection personnel who are certified, in accordance with the code of construction requirements.
2. A documentation package is to be prepared and maintained during fabrication to include detailed records and evidence that the required inspections and tests have been performed under an NRC-approved quality assurance program. Prior to shipment of the canister, the document package is to be reviewed to verify that the FuelSolutions™ W21 canister shell assembly and the canister basket assembly have been properly fabricated and inspected in accordance with the design and code of construction requirements. The documentation package is to include:
   - Completed Shop Travelers and Referenced Procedures
   - Inspection Records
   - Inspector/Welder Certification Records
   - Nonconformance Reports
   - Material Test Reports
   - NDE Reports
   - Procurement Records
   - As-Built Report
3. A dimensional inspection of the canister shell is to be performed to verify compliance with the design requirements. The canister overall length, diameter, and cylindricity are to be verified to provide assurance that the canister will properly interface with other FuelSolutions™ Storage System components.
4. A dimensional inspection of the internal basket assembly is to be performed prior to insertion into the canister shell, to verify compliance with the design requirements. The size and position of the basket assembly structural members are to be verified to provide assurance that the SNF assemblies are properly supported.
5. Proper fit-up of the canister drain tube is verified to assure the canister can be effectively dewatered.

6. After assembly of the canister is complete, the top shield plug, inner closure plate, and outer closure plate are to be inserted to verify their proper fit. Proper fit-up of the shield plug and individual closure plates is verified to assure adequate shielding and interface with the handling equipment.
7. Proper location of the canister alignment marks and vent, drain, and instrument port labels on the outer closure plate is to be verified in accordance with design requirements to assure proper handling during operations.
8. An inspection is to be performed to verify that the canister nameplate is properly attached and contains the required information. Specifically, the nameplate information is to include the canister model number, serial number, and empty weight.
9. Canister cleanliness will be verified as meeting the criteria specified in ASME NQA-1,[6] Subpart 2.1, Class B, upon completion of fabrication.
10. Canister protection at the completion of fabrication will be verified to be in accordance with the requirements of ASME NQA-1, Subpart 2.2, Level C.
11. Canister protection at the licensee's facility will be verified to be commensurate to the requirements specified for fabrication.
12. Canister interior and exterior surfaces will be inspected to verify cleanliness and assure foreign material exclusion prior to placing in the spent fuel pool.
13. Following canister fuel loading and closure, the canister nameplate is to be verified to assure it is properly completed with the loading date.

9.1.2 Structural

The structural performance of the FuelSolutions™ W21 canister is assured by the verification of the material properties, assembly dimensions, and weld integrity. The inspections to be performed to assure canister structural performance include the following:

1. Material compliance is to be demonstrated through receipt inspections to assure that it meets the specified design, code of construction, and procurement requirements.
2. Prior to internal basket insertion, all canister shell radiographs are to be reviewed to assure that they meet the design and code of construction requirements. Radiography is required for the canister shell longitudinal and circumferential seam and shell-to-bottom closure plate welds only. The inner and outer top end closure plate welds do not require radiography since the canister shell top end uses redundant closure welds with liquid penetrant examination, and helium leak testing of the inner closure plate welds.
3. Following attachment of the bottom closure plate to the canister shell during shop fabrication, the cavity formed by this plate, the shell, and a temporary closure is filled with helium to 12.5 psig, using a port through the temporary closure used. All circumferential and longitudinal full-penetration butt welds in the canister shell and the bottom closure plate-to-canister shell weld are then pressure tested in accordance with Subarticle NB-6300 of the

[6] ASME NQA-1, *Quality Assurance Program Requirements for Nuclear Facility Applications*, American Society of Mechanical Engineers, 1994.

ASME Code. This may be done in conjunction with the leak testing as described in Section 9.1.3.

4. Following the placement of the inner top closure plate and evacuation and vacuum drying of the canister following fuel loading, the canister cavity is backfilled with helium to 12.5 psig. The inner top closure plate-to-canister shell weld and the welds to the drain and vent port bodies are then pressure tested as described in Section 8.1.8 of this FSAR.
5. Following the successful pressure and leak rate tests of the inner closure plate welds and a second vacuum drying cycle of the canister cavity, the canister cavity is backfilled with helium in accordance with the *technical specification* contained in Section 12.3 and the canister vent and drain port covers are seal-welded in place. This is followed by placement of the outer top closure plate.

9.1.3 Leak Tests

1. Following the pressurization with helium of the cavity formed by the bottom closure plate, the canister shell, and a temporary closure, as described in Section 9.1.2, the canister shell circumferential and longitudinal full-penetration butt welds and the bottom closure plate-to-shell weld are helium leak rate tested to verify a maximum leak rate of 8.52×10^{-6} ref-cc/sec.
2. Following installation of the vent and drain block assemblies, the installed vent/drain port quick connect fittings will be soap bubble leak tested.
3. Following the pressurization with helium of the cavity formed by the inner top closure plate and the canister shell, as described in Section 9.1.2, the inner top closure plate welds are helium leak rate tested in accordance with the *technical specification* requirements contained in Section 12.3 of the FuelSolutions™ Storage System FSAR.

9.1.4 Criticality Safety

Criticality safety of the FuelSolutions™ W21 canister is assured by verification of the properties of the borated neutron absorber material properties and the basket assembly dimensions. The neutron absorber areal density is an important characteristic that assures subcriticality during all FuelSolutions™ canister operating modes. The tests and inspections to be performed to assure canister criticality safety performance include the following:

1. To assure that the minimum specified areal boron loading is provided, the FuelSolutions™ W21 canister borated neutron absorber material shall be tested as described in the material manufacturer's product literature provided in Section 1.5.2.1 of this FSAR.
2. The dimensions of the canister basket assembly are to be verified, as described in Section 9.1.1.

9.1.5 Shielding Integrity

The shielding performance of the FuelSolutions™ W21 canister is assured by the verification of canister material densities and assembly dimensions. The inspections to be performed to assure shielding performance include the following:

1. Material compliance is to be demonstrated through receipt inspections to assure that it meets the specified design, code of construction, and procurement requirements.
2. A dimensional inspection of the top and bottom shield plug thickness is to be performed to verify compliance with the design requirements.
3. For FuelSolutions™ canisters with lead or depleted uranium shield plug assemblies, a gamma scan of the top and bottom shield plugs is to be performed to verify the absence of unacceptable voids affecting shielding performance.

9.1.6 Thermal Acceptance

Thermal performance of the FuelSolutions™ W21 canister is demonstrated through analysis, helium backfilling during canister sealing, and periodic storage cask monitoring during storage, as described in the FuelSolutions™ Storage System FSAR. The inspections to be performed to assure canister thermal performance include the following:

1. Material compliance is to be demonstrated through receipt inspections to assure that it meets the specified design, code of construction, and procurement requirements.
2. Canister dimensions are to be verified against the design requirements.
3. Canister leak tightness is to be verified by volumetric examination of the canister shell seam welds, liquid penetrant examination of the redundant closure welds, and helium leak testing performed during fabrication and following canister loading. This provides assurance that the inert helium atmosphere needed to promote heat transfer and prevent fuel cladding degradation during storage is maintained.

9.1.7 Components

9.1.7.1 Functional Performance Tests

The functional performance of each canister is assured by the dimensional inspections of Section 9.1.1 and the following inspections and tests:

1. A fit-up test of the top shield plug in the canister/basket assembly.
2. A functional leak test of the quick connect fittings installed in the vent and drain port openings.
3. A fit-up test of the inner top closure plate and its vent and drain port covers in the canister/basket/top shield plug assembly.
4. A fit-up test of the outer top closure plate in the canister/basket/top shield plug/inner top closure plate/vent and drain port cover assembly.
5. After the basket is inserted into the canister shell, a gauge test of each of the guide tubes is to be performed to verify that a fuel assembly size gauge properly fits within each guide tube.

9.1.7.2 Canister Identification Inspections

Each canister will be identified by permanent marking that contains the following information:

- Name of Designer – BNG Fuel Solutions
- Canister Serial Number – RST-LS-XXX-Y

  where, RST is the canister designation (21M or 21T)

  L is the canister length designation (L = long, S = short)

  S is the shield plug material designation (S = steel, D = depleted uranium, L = lead)

  XXX is a sequential number assigned by the license holder

  Y is the fabricator designator
- Empty Weight
- C of C number

Each canister identification mark is to be inspected during fabrication and preoperation for accuracy and legibility.

9.2 Maintenance Program

This section discusses the maintenance program for the FuelSolutions™ W21 canister, which is classified as important to safety. Noncompliances encountered during the required maintenance activities will be dispositioned in accordance with the BFS Quality Assurance program, discussed in Chapter 13 of the FuelSolutions™ Storage System FSAR, or the licensee's NRC-approved Quality Assurance program. The maintenance program is intended to demonstrate that the FuelSolutions™ W21 canister continues to perform properly and complies with regulatory requirements and the *technical specifications* contained in Chapter 12 of this FSAR and the FuelSolutions™ Storage System FSAR.

The FuelSolutions™ W21 canister relies on no mechanical components or moving parts once in its storage configuration. Exposed materials are corrosion-resistant stainless steel. No inspection of a loaded canister during storage is required due to the integrity of the canister, as verified during fabrication, acceptance testing, and canister closure. Periodic monitoring of the FuelSolutions™ storage cask, in accordance with the *technical specification* contained in Section 12.3 of this FSAR, provides added assurance that fuel cladding degradation does not occur. Thus, no prescribed maintenance program is necessary during the 100-year design life of the FuelSolutions™ W21 canister.

This page intentionally left blank.

9.3 First Cask In Use Requirements

Section 9.3 of the FuelSolutions™ Storage System FSAR presents requirements for the first FuelSolutions™ storage cask loaded with a FuelSolutions™ W21 canister design to measure its heat removal performance and to establish baseline data.

This page intentionally left blank.

10. RADIATION PROTECTION

This chapter, along with Chapter 10 of the FuelSolutions™ Storage System FSAR,[1] describes the radiation design protection criteria and features; occupational exposures; public exposures, both for normal and postulated accident conditions; and ALARA considerations for the FuelSolutions™ Storage System using a FuelSolutions™ W21 canister.

Section 10.2 of the FuelSolutions™ Storage System FSAR describes radiation protection for the FuelSolutions™ W100 Transfer Cask, the FuelSolutions™ W150 Storage Cask, and a generic FuelSolutions™ canister. The discussions apply to the FuelSolutions™ W21 canister because the FuelSolutions™ W21 canister was used as the basis for the generic case. There is no further canister-unique information beyond that in Chapter 10 of the FuelSolutions™ Storage System FSAR.

The radiation protection features of the FuelSolutions™ Storage System, including the canister shield plugs and operational features that minimize occupational and off-site radiation exposures, are discussed in Section 10.3 of the FuelSolutions™ Storage System FSAR. Application of ALARA principles and evaluation of off-site doses are also provided in Chapter 10 of the FuelSolutions™ Storage System FSAR.

[1] WSNF-220, *FuelSolutions™ Storage System Final Safety Analysis Report*, NRC Docket 72-1026, BNG Fuel Solutions.

This page intentionally left blank.

10.1 Ensuring that Occupational Radiation Exposures Are As Low As Is Reasonably Achievable (ALARA)

The policy, design, and operational considerations described in Section 10.1 of the FuelSolutions™ Storage System FSAR are applicable to the FuelSolutions™ W21 canister.

This page intentionally left blank.

10.2 Radiation Protection Design Features

The discussion of radiological protection design features provided in Section 10.2 of the FuelSolutions™ Storage System FSAR is applicable to the FuelSolutions™ W21 canister.

This page intentionally left blank.

10.3 Estimated On-Site Collective Dose Assessment

The estimates for canister loading and unloading exposures presented in Section 10.3 of the FuelSolutions™ Storage System FSAR are applicable to the FuelSolutions™ W21 canister. Separate estimations are provided for the FuelSolutions™ vertical and horizontal loading alternatives.

During ISFSI dry storage, routine inspections of the storage casks is required; and snow removal may be required on a site-specific basis. Estimates for these operations, assuming an 8x8 array of loaded FuelSolutions™ Storage Casks, are also included in Section 10.3 of the FuelSolutions™ Storage System FSAR.

This page intentionally left blank.

10.4 Estimated Off-Site Collective Dose Assessment

10.4.1 Off-Site Dose for Normal Operations

The off-site dose for normal operations is calculated in Section 10.4 of the FuelSolutions™ Storage System FSAR.

10.4.2 Off-Site Dose for Off-Normal Conditions

The off-site dose for off-normal operations is calculated in Section 10.4 of the FuelSolutions™ Storage System FSAR.

10.4.3 Off-Site Dose for Accident Conditions

Section 7.3 of this FSAR discusses the accident condition atmospheric release from a single canister and demonstrates compliance with 10CFR72.106(b). Assuming one W21 canister is leaking under accident internal pressure with 100% of the fuel rod cladding failed, and worst case meteorological conditions, the total effective equivalent dose vs. distance are presented for several distances in Table 7.3-1 and Figure 7.3-1. The results show that the 5 rem dose limit of 10CFR72.106(b) is met at the minimum controlled area boundary distance of 100 meters or greater.

This page intentionally left blank.

11. ACCIDENT ANALYSES

This chapter presents the evaluation of the FuelSolutions™ W21 canister for the effects of off-normal and postulated accident conditions. The design basis off-normal and postulated accident events, including those resulting from mechanistic and non-mechanistic causes as well as those caused by natural phenomena, are identified in Sections 2.3.2, 2.3.3, and 2.3.4 of this FSAR. For each postulated event, the event cause, means of detection, consequences, and corrective action are discussed and evaluated. As applicable, the evaluation of consequences include structural, thermal, shielding, criticality, confinement, and radiation protection evaluations for the effects of each design basis event on the FuelSolutions™ W21 canister.

The FuelSolutions™ W21 canister design is described in Section 1.2.1.3, and shown in Figure 1.2-2 of this FSAR. The structural, thermal, shielding, criticality, confinement features, and performance of the canister are discussed in Chapters 3, 4, 5, 6, and 7 of this FSAR. The evaluations provided in this chapter are based on the canister design features and evaluations described therein.

The evaluation of the design basis off-normal and postulated accident events on the FuelSolutions™ W150 Storage Cask and W100 Transfer Cask are contained in Chapter 11 of the FuelSolutions™ Storage System FSAR.[1]

[1] WSNF-220, *FuelSolutions™ Storage System Final Safety Analysis Report*, NRC Docket 72-1026, BNG Fuel Solutions.

This page intentionally left blank.

11.1 Off-Normal Operations

The FuelSolutions™ W21 canister is evaluated for all credible and significant design basis events resulting from off-normal operation. Off-normal conditions and events are defined in accordance with ANSI/ANS-57.9,[2] and include events which, although not occurring regularly, can be expected to occur with moderate frequency on the order of no more than once a year. As defined in Section 2.3.2 of this FSAR, off-normal events considered in the evaluation of the FuelSolutions™ W21 canister include the following:

- Extreme ambient conditions
- Off-normal internal pressure
- Potential misalignment of casks during horizontal canister transfer
- Potential failure of the hydraulic ram during horizontal transfer
- Reflood of the canister to facilitate fuel retrieval
- Off-normal fuel rod rupture (evaluated in conjunction with off-normal internal pressure).

The results of the evaluations performed herein demonstrate that the FuelSolutions™ W21 canister classes described in Section 1.2.1.3 can withstand the effects of off-normal events without affecting safety function, and are in compliance with the applicable acceptance criteria. The following sections present the evaluation of the FuelSolutions™ W21 canister for the design basis off-normal conditions which demonstrate that the requirements of 10CFR72.122[3] are satisfied, and that the corresponding radiation doses satisfy the requirements of 10CFR72.106(b) and 10CFR20.[4]

The load combinations evaluated for off-normal conditions are defined in Table 2.3-1. The load combinations include both normal loads, which are evaluated in Section 3.5 of this FSAR, and off-normal loads, which are evaluated in Section 3.6. The off-normal load combination evaluations are discussed in Section 11.1.6.

The evaluation of the effects of off-normal conditions on the storage cask and transfer cask are provided in the FuelSolutions™ Storage System FSAR.

11.1.1 Off-Normal Temperature and Insolation Loadings

Many regions of the United States are subject to maximum summer temperatures in excess of 100ºF, and minimum winter temperatures that are significantly below 0°F. Therefore, to bound the expected temperatures of the storage cask during these short-term periods of extreme off-normal ambient conditions, conservative analyses are performed to calculate the steady-state W21 canister and fuel cladding temperatures for a maximum 125ºF ambient temperature with

[2] American National Standards Institute, "Design Criteria for an Independent Spent Fuel Storage Installation (Dry Storage Type)," ANSI/ANS-57.9, 1984.

[3] Title 10, Code of Federal Regulations, Part 72 (10CFR72), *Licensing Requirements for the Independent Storage of Spent Nuclear Fuel and High-Level Radioactive Waste*, 1995.

[4] Title 10, Code of Federal Regulations, Part 20 (10CFR20), *Standards for Protection Against Radiation*, 1995.

maximum insolation, and for a minimum -40ºF ambient without insolation. The design basis heat loads for the W21 canister, as documented in Chapter 4 of this FSAR, are used for this analysis.

11.1.1.1 Postulated Cause of the Event

While off-normal fluctuations in ambient conditions vary with geographical location and seasons, the selected off-normal ambient conditions bound all historical records for extreme temperatures and insolation over the contiguous United States. Therefore, the probability of extreme temperatures exceeding the off-normal thermal design conditions is negligible.

11.1.1.2 Detection of the Event

No monitoring of the ambient conditions is required at the ISFSI since the assumed off-normal steady-state ambient conditions bound those expected throughout the contiguous United States.

11.1.1.3 Summary of Event Consequences and Regulatory Compliance

Structural

The structural evaluation of the canister for off-normal thermal conditions is discussed in Section 3.6.1 of this FSAR.

Thermal

The thermal analysis of the canister for off-normal thermal conditions is performed using the methodology, material properties, thermal models, and design basis heat loads described in Section 4.5 of this FSAR. The resulting off-normal canister and fuel assembly cladding temperatures for the hot and cold conditions are provided in Tables 4.5-1, 4.5-4, and 4.5-5. As can be seen from these tables, all temperatures for off-normal conditions are within the allowable values described in Table 4.3-1 of this FSAR.

Shielding

There is no effect on the shielding performance of the canister as a result of this off-normal event.

Criticality

There is no effect on the criticality control features of the canister as a result of this off-normal event.

Confinement

There is no effect on the confinement function of the canister as a result of this off-normal event.

Radiation Protection

Since there is no degradation in shielding or confinement capabilities, there is no effect on occupational or public exposures as a result of this off-normal event.

11.1.1.4 Corrective Actions

The FuelSolutions™ W21 canister is conservatively designed to safely accommodate steady-state extreme off-normal ambient conditions. Therefore, no corrective actions are required.

11.1.2 Off-Normal Internal Pressure

As discussed in Section 2.3.2.2 and summarized in Table 2.0-1 of this FSAR, the design basis off-normal condition internal pressure for the FuelSolutions™ W21 canister is 16 psig. The maximum internal pressure for this condition, as calculated in Section 4.5 of this FSAR, is based on the required helium backfill in accordance with the *technical specification* provided in Section 12.3, elevated to the extreme off-normal condition canister cavity gas temperature. In addition, a concurrent non-mechanistic failure of 10% of the fuel rods with complete release of their fill gas and 30% of their fission gasses into the canister cavity elevated to the extreme off-normal condition canister cavity gas temperature is assumed. The resulting calculated internal pressure is bounded by the design basis internal pressure, as shown in Table 4.1-5.

11.1.2.1 Postulated Cause of the Event

After fuel assembly loading, the canister is drained, dried, and backfilled with an inert cover gas (helium) to assure long-term cladding integrity during dry storage. Therefore, the probability of failure of intact rods in dry storage is low. Nonetheless, such an event is postulated and evaluated.

11.1.2.2 Detection of the Event

No monitoring of the canister internal pressure is required since the canister design is adequate to withstand the design basis off-normal internal pressure.

11.1.2.3 Summary of Event Consequences and Regulatory Compliance

Structural

The structural evaluation of the canister for off-normal internal pressure conditions is described in Section 3.6 of this FSAR. The resulting stresses for this loading condition are provided in Table 3.6-1. As discussed in Section 3.6.2, all stresses are within the allowable values.

Thermal

The canister internal pressure for off-normal conditions is performed using the methodology, material properties, thermal models, and design basis heat loads described in Section 4.5 of this FSAR. The temperatures resulting from the off-normal thermal analysis are used to determine the corresponding internal pressure provided in Tables 4.5-2, 4.5-3, and 4.5-5. As can be seen from these tables, the 16 psig design basis internal pressure used in the structural evaluation described above bounds these calculated values.

Shielding

There is no effect on the shielding performance of the canister as a result of this off-normal event.

Criticality

There is no effect on the criticality control features of the canister as a result of this off-normal event.

Confinement

As discussed in the structural evaluation above, all stresses remain within allowable values, assuring canister integrity. The effects of this event on the release for the design basis canister leak rate is evaluated in Section 7.2 of this FSAR.

Radiation Protection

The postulated release will result in an increase in dose to the public. The analysis of this event is provided in Section 7.2 of this FSAR, and the resulting occupational exposures and off-site doses are addressed in Sections 10.3 and 10.4 of this FSAR, respectively.

11.1.2.4 Corrective Actions

The FuelSolutions™ W21 canister is conservatively designed to safely accommodate the internal pressure resulting from this off-normal condition. Therefore, no corrective actions are required.

11.1.3 Cask Misalignment During Horizontal Canister Transfer

The FuelSolutions™ storage system is evaluated for a maximum hydraulic ram load of 70 kips pushing or 50 kips pulling resulting from cask misalignment or interference during horizontal canister transfer, as defined in Section 2.3.2.3 of this FSAR. The ram load is applied on the top or bottom end of the canister shell assembly. However, the limiting case is the pulling condition because the outer closure plate is required to carry the entire transfer load. For the pushing case, the shield plug and inner closure plate also assist in carrying the load, resulting in significantly less strain in the outer closure plate and therefore lower stresses. The structural consequences of this event are evaluated for all horizontal canister transfer scenarios.

11.1.3.1 Postulated Cause of the Event

As described in Section 1.2.2.3 of the FuelSolutions™ Storage System FSAR, a hydraulic ram is used during horizontal transfer of the canister to the casks. The ram slides the canister from cask to cask by pushing or pulling it between the storage cask and the transfer cask; the transfer cask and the transportation cask; or the storage cask and the transportation cask. Under normal conditions, the hydraulic ram loads are equal to the force required to overcome friction forces between the canister shell and the cask guide rails. Prior to performing horizontal canister transfer operations, the casks are docked, closely aligned, and secured together to prevent shifting or separation. In addition, beveled lead-ins are provided on the ends of the canister shell, cask openings, and the cask guide rails to minimize the possibility of interference during horizontal transfer. However, it is postulated that in the unlikely event that the storage cask and the transfer cask; the transfer cask and the transportation cask; or the storage cask and the transportation cask are not properly aligned during transfer, the hydraulic ram load could exceed the normal design loads.

11.1.3.2 Detection of the Event

During horizontal transfer operations, the hydraulic ram pressure (load) is monitored. In addition, the hydraulic ram loads are limited by the hydraulic system using automatic shut-off switches so that normal condition ram loads are not exceeded. If the hydraulic system shuts down, indicating the possibility of a misalignment or interference, the operator may use override

controls to increase the hydraulic ram loads up to the maximum design load of 70 kips pushing or 50 kips pulling after rechecking the cask for proper alignment. The override controls do not allow hydraulic ram loads to be increased above the maximum design load.

11.1.3.3 Summary of Event Consequences and Regulatory Compliance

Structural

The stress evaluation for increased ram force postulated to occur due to misalignment of the canister is discussed in Section 3.6.3 of this FSAR. The resulting stresses for this condition are provided in Table 3.6-1. All stresses are within the allowable values.

Thermal

There is no effect on the thermal performance of the canister as a result of this off-normal event.

Shielding

There is no effect on the shielding performance of the canister as a result of this off-normal event.

Criticality

There is no effect on the criticality performance of the canister as a result of this off-normal event.

Confinement

There is no effect on the confinement performance of the canister as a result of this off-normal event.

Radiation Protection

As there is no degradation in shielding or confinement capabilities, there is no effect on public exposures as a result of this off-normal event.

Recovery from this event, as discussed in Section 11.1.3.4, results in slight increases in occupational exposure due to the additional recovery operations. The estimated occupational exposure for recovery operations is discussed in Section 11.1.2.3.1 of the FuelSolutions™ Storage System FSAR.

11.1.3.4 Corrective Actions

The corrective action for a canister misalignment or interference is discussed in Section 11.1.2.4 of the FuelSolutions™ Storage System FSAR.

11.1.4 Hydraulic Ram Failure During Horizontal Canister Transfer

The FuelSolutions™ storage system is evaluated for the effects of failure of the hydraulic ram during horizontal canister transfer operations, as defined in Section 2.3.2.5 of this FSAR.

11.1.4.1 Postulated Cause of the Event

The postulated cause of this event is discussed in Section 11.1.3.1 of the FuelSolutions™ Storage System FSAR.

11.1.4.2 Detection of the Event

The detection of this event is discussed in Section 11.1.3.2 of the FuelSolutions™ Storage System FSAR.

11.1.4.3 Summary of Event Consequences and Regulatory Compliance

Structural

There are no structural consequences as a result of this postulated event.

Thermal

In Section 4.5.2 of this FSAR, a thermal analysis of the canisters is performed for the transfer cask in the horizontal position for off-normal conditions. This analysis, as described in Section 4.5.2, shows that under steady-state conditions, no canister components exceed the allowable temperatures in the transfer cask.

For the storage cask, the cask liner thermocouple temperature is monitored in accordance with the *technical specification* in Section 12.3 of this FSAR, and corrective actions completed as necessary. The canister temperatures while in the horizontal storage cask is discussed in Section 4.5.1 and reported in Table 4.5-1 of this FSAR.

Shielding

There are no effects on the shielding performance of the canisters as a result of this off-normal event.

Criticality

The are no effects on the criticality performance of the canisters as a result of this off-normal event.

Confinement

There are no effects on the confinement function of the canisters as a result of this off-normal event.

Radiation Protection

As there is no degradation in shielding or confinement, there is no effect on public exposures as a result of this off-normal event. Effects of recovery from this event are discussed in Section 11.1.3.3 of the FuelSolutions™ Storage System FSAR.

11.1.4.4 Corrective Action

The corrective action for this event is discussed in Section 11.1.3.4 of the FuelSolutions™ Storage System FSAR.

11.1.5 Canister Reopening/Reflood

The FuelSolutions™ W21 canister is evaluated for the effects of reflooding the canister after the canister cavity is drained and dried. This could occur prior to or after dry storage. The limiting internal pressure for this condition is 100 psig as defined in Section 2.3.2.4 of this FSAR. The

evaluation provided in this section demonstrates that the FuelSolutions™ W21 canister can accommodate the reflood condition without compromising the integrity of the canister.

11.1.5.1 Postulated Cause of the Event

Under normal conditions, reopening and/or reflooding of the FuelSolutions™ W21 canister is not anticipated to occur. However, it may be required to reflood the canister to remove the fuel for an undetermined reason, possibly for transfer of title of the SNF to DOE. Therefore, the event is postulated and evaluated.

11.1.5.2 Detection of the Event

Reflooding of the canister is a planned activity.

11.1.5.3 Analysis of Effects and Consequences

Structural

The stress evaluation of the canister for internal pressure resulting from the reflood is provided in Section 3.6.4 of this FSAR. All stresses are within the allowable values. The resulting canister pressure stresses are summarized in Table 3.6-1 of this FSAR. The fuel cladding thermal stress effects due to reflood are discussed in Section 4.4.2.3 of this FSAR and shown to remain within allowable values.

Thermal

The thermal evaluation of the canister during reflood conditions is provided in Section 4.4.2.3 of this FSAR. All material temperatures remain within the off-normal allowable temperatures for this condition, as defined in Table 4.3-1.

Shielding

There is no effect on the shielding performance of the canister as a result of this activity.

Criticality

There is no effect on the criticality performance of the canister as a result of this activity. As described in Chapter 6 of this FSAR, the canister is evaluated for a full range of pure water moderator densities, and for the most reactive moderator density. No soluble boron credit is taken in the criticality analysis. Therefore, the criticality evaluation bounds the conditions expected during reflood.

Confinement

Since this operation is predicated upon opening the canister, there is no confinement function provided by the canister during this activity.

Radiation Protection

As there is no degradation in shielding or confinement capabilities, there is no effect on public exposures as a result of this off-normal operation. Performing this operation results in occupational exposure which is estimated to be equivalent to the occupational exposure incurred for canister draining, drying, and closure operations. Sampling of the canister internal atmosphere prior to reflood is performed, as discussed in Section 8.2.3.2 of the FuelSolutions™

Storage System FSAR, to preclude unanticipated release of radionuclides. The occupational exposures for these operations is discussed in Section 10.3 of the FuelSolutions™ Storage System FSAR.

11.1.5.4 Corrective Action

There is no corrective action for this off-normal operation.

11.1.6 Off-Normal Load Combinations

Load combinations for off-normal conditions are performed for the FuelSolutions™ W21 canister in accordance with Section 2.3.5 of this FSAR. The load combinations include normal loads, which are evaluated in Section 3.5, and off-normal loads, which are evaluated in Section 3.6. The load combination results for the canister are reported in Table 3.6-2. As shown in the table, all stresses are within allowable values.

11.2 Accidents

The FuelSolutions™ W21 canister is evaluated for a range of postulated accidents and natural phenomena, as defined in Sections 2.3.3 and 2.3.4 of this FSAR. The design basis postulated accident conditions and natural phenomena considered are in accordance with ANSI/ANS-57.9, and include events which are postulated because their consequences may result in maximum potential impact on the immediate environs. Evaluations are performed for a range of postulated accidents, including those with the potential to result in an annual dose greater than 25 mrem outside the controlled area in accordance with 10CFR72. The design basis postulated accident and natural phenomena events evaluated for the W21 canister include the following:

- Fully blocked storage cask inlet and outlet vents
- Cask drop and tip-over
- Fire
- Flood
- Earthquake
- Accident internal pressure
- Accident fuel rod rupture (evaluated in conjunction with accident internal pressure).

As discussed in Sections 2.3.3 and 2.3.4, the canister is not subjected to loads due to explosive overpressure, tornado, wind, burial under debris, lightning, and snow and ice.

The results of the evaluations performed herein demonstrate that the FuelSolutions™ W21 canister classes and types described in Section 1.2.1.3 can withstand the effects of all credible accident conditions and natural phenomena without affecting safety function, and are in compliance with the applicable acceptance criteria. The following sections present the evaluation of the FuelSolutions™ W21 canister for the design basis postulated accident conditions and natural phenomena which demonstrate that the requirements of 10CFR72.122 are satisfied, and that the corresponding radiation doses satisfy the requirements of 10CFR72.106(b) and 10CFR20.

The load combinations evaluated for postulated accident conditions are defined in Table 2.3-1. The load combinations include normal loads, which are evaluated in Section 3.5; off-normal loads, which are evaluated in Section 3.6; and accident loads, which are evaluated in Section 3.7. The accident load combination evaluations are provided in Section 3.7.

The evaluation for the effects of the design basis postulated accident events on the FuelSolutions™ W150 Storage Cask and W100 Transfer Cask is provided in the FuelSolutions™ Storage System FSAR.

11.2.1 Fully Blocked Storage Cask Inlet and Outlet Vents

The FuelSolutions™ W21 canister, loaded with design basis fuel assemblies and dry stored vertically in the storage cask, is evaluated for a postulated accident thermal event in which complete blockage of all storage cask inlet and outlet vents occurs.

A steady-state ambient temperature of 100°F with insolation, as defined in Section 2.3 and listed in Table 2.3-2 of the FuelSolutions™ Storage System FSAR, are conservatively postulated to occur concurrently.

11.2.1.1 Postulated Cause of the Event

The postulated cause of this event is discussed in Section 11.2.1.1 of the FuelSolutions™ Storage System FSAR.

11.2.1.2 Detection of the Event

The detection of this event is discussed in Section 11.2.1.2 of the FuelSolutions™ Storage System FSAR.

11.2.1.3 Summary of Event Consequences and Regulatory Compliance

Structural

The maximum canister internal pressure due to the postulated blocked vent accident is less than 68.7 psig, as discussed in Section 4.6.1.4 of this FSAR.

The blocked vent condition pressure is much less than the design basis accident pressure of 69 psig. Therefore, the accident pressure analysis discussed in Section 11.2.8 bounds the pressure due to the blocked vent condition. Canister thermal stresses for this condition are bounded by other conditions, as discussed in Section 3.7.1 of this FSAR.

Thermal

As described in Section 4.5.1.2.2 of this FSAR, the concrete reaches its allowable temperature as a result of this event. As determined in Section 4.6.1 of this FSAR, the FuelSolutions™ W21 canister cladding temperature is 367ºC at the time the peak temperature is reached, which is well below the short-term allowable cladding temperature of 570ºC. Also as shown in Section 4.6.1, the basket material temperatures remain within the allowable material temperatures defined in Table 4.3-1.

Shielding

There is no effect on the shielding performance of the canister as a result of this postulated event.

Criticality

There is no effect on the criticality control features of the canister as a result of this postulated event.

Confinement

There is no effect on the confinement function of the canister as a result of this postulated event.

Radiation Protection

Since there is no degradation in shielding or confinement, there is no effect on public exposures as a result of this postulated event. Occupational exposure resulting from recovery from this event is discussed in Section 11.2.1.3 of the FuelSolutions™ Storage System FSAR.

11.2.1.4 Corrective Action

The corrective action for this event is discussed in Section 11.2.1.4 of the FuelSolutions™ Storage System FSAR.

11.2.2 Storage Cask Drop

The storage cask is evaluated for a drop as discussed in Section 2.3.3.2 of this FSAR and evaluated in Section 3.7 of the FuelSolutions™ Storage System FSAR. The accidental storage cask drop scenario is a postulated vertical end drop onto the bottom end of the storage cask. The FuelSolutions™ W21 canister is evaluated for the deceleration loads resulting from this postulated drop scenario.

11.2.2.1 Postulated Cause of the Event

The postulated cause of this event is discussed in Section 11.2.2.1 of the FuelSolutions™ Storage System FSAR.

11.2.2.2 Detection of the Event

The detection of this event is discussed in Section 11.2.2.2 of the FuelSolutions™ Storage System FSAR.

11.2.2.3 Summary of Event Consequences and Regulatory Compliance

Structural

The canister shell assembly stress evaluation is provided in Section 3.7.3 of this FSAR. The resulting stresses due to the postulated storage cask end drop accident for the canister shell assembly components are summarized in Table 3.7-4. Similarly, the canister basket stress results are provided in Table 3.7-5. All stresses are within allowable values.

Thermal

The temperatures of the storage cask, canister, and fuel cladding may be affected by a postulated accidental drop of the storage cask as a result of damage to the storage cask vents and/or heat shield. The thermal effects of the end drop condition with the storage cask in the vertical orientation are enveloped by the fully blocked vent condition which is evaluated in Section 11.2.1 of this FSAR.

Shielding

There is no effect on the shielding performance of the canister as a result of this event. The effects on shielding performance of the storage cask as a result of this postulated accident are addressed in Section 11.2.2 of the FuelSolutions™ Storage System FSAR.

Criticality

There is no effect on the criticality performance of the basket as a result of this postulated accident, as the canister basket components remain within their allowable stress values and the guide tubes remain elastic. Therefore, there is no change in basket geometry.

Confinement

There is no effect on the confinement performance of the canister as a result of this postulated accident, as the canister shell components remain within their allowable stress values. Therefore, the canister shell will remain intact.

Radiation Protection

As there is no effect in the shielding or confinement performance of the canister, the canister has no effect on public exposures as a result of this event. The discussion of public exposure resulting from the effects of this postulated accident on the storage cask is provided in Section 11.2.2.3 of the FuelSolutions™ Storage System FSAR.

Occupational exposure resulting from recovery from this event is also discussed in Section 11.2.2.3 of the FuelSolutions™ Storage System FSAR.

11.2.2.4 Corrective Action

The corrective action for this event is discussed in Section 11.2.2.4 of the FuelSolutions™ Storage System FSAR.

11.2.3 Storage Cask Tip Over on J-Skid

The storage cask is evaluated for a postulated accidental tip over event while on the J-skid as discussed in Section 2.3.3.3 and evaluated in Section 11.2.3 of the FuelSolutions™ Storage System FSAR. The FuelSolutions™ W21 canister is evaluated for the deceleration loads resulting from this tip over scenario.

11.2.3.1 Postulated Cause of the Event

The postulated cause of this event is discussed in Section 11.2.3.1 of the FuelSolutions™ Storage System FSAR.

11.2.3.2 Detection of the Event

The detection of this event is discussed in Section 11.2.3.2 of the FuelSolutions™ Storage System FSAR.

11.2.3.3 Summary of Event Consequences and Regulatory Compliance

Structural

The canister shell assembly and basket spacer plate stress evaluation is provided in Section 3.7.4 of this FSAR.

The structural effects of this event on the basket guide tubes are bounded by the postulated transfer cask side drop event, as discussed in Section 3.7.4 of this FSAR.

The resulting stresses due to the postulated storage cask tip-over accident for the canister shell assembly components are summarized in Table 3.7-4. Similarly, the canister basket stress results are provided in Table 3.7-5. All stresses are within allowable values.

Thermal

The temperatures of the storage cask, canister, and fuel cladding may be affected by a postulated accidental tip over of the storage cask as a result of damage to the storage cask vents and/or heat shield. This condition will be less severe than the accident thermal full vent blockage condition which is evaluated in Section 11.2.1. The results of the postulated vent blockage show that the canister temperatures remain within the short-term allowable temperatures.

The thermal effects of the tip over event with the storage cask in the horizontal orientation are enveloped by the corresponding normal conditions for horizontal canister transfer which is evaluated in Section 4.4.1 of the FuelSolutions™ Storage System FSAR.

A thermal analysis of the canister in the storage cask in the horizontal position under normal conditions is performed in Section 4.5.2 of this FSAR. The *technical specification* in Section 12.3 of this FSAR provides the limits and corrective actions should the allowable concrete temperature be exceeded. The *technical specification* provides corrective actions which assure that the canister allowable temperatures are not exceeded for the required recovery operations.

Shielding

There is no effect on the shielding performance of the canister as a result of this event. The effects on shielding performance of the storage cask as a result of this postulated accident are addressed in Section 11.2.3.3 of the FuelSolutions™ Storage System FSAR.

Criticality

As discussed in the structural evaluation above, the permanent deformation of the guide tube for the storage cask tip over is bounded by that for the transfer cask side drop. The effects on criticality for the side drop are discussed in Section 11.2.4.3.

Confinement

There is no effect on the confinement performance of the canister as a result of this postulated accident, as the canister shell components remain within their allowable stress values. Therefore, the canister shell will remain intact.

Radiation Protection

As there is no effect on the shielding or confinement performance of the canister, the canister has no effect on public exposures as a result of this event. The discussion of public exposure resulting from the effects of this postulated accident on the storage cask is provided in Section 11.2.3.3 of the FuelSolutions™ Storage System FSAR.

Occupational exposure resulting from recovery from this event is also discussed in Section 11.2.3.3 of the FuelSolutions™ Storage System FSAR.

11.2.3.4 Corrective Action

The corrective action for this event is discussed in Section 11.2.3.4 of the FuelSolutions™ Storage System FSAR.

11.2.4 Transfer Cask Drop

The transfer cask is evaluated for a postulated accidental side drop event as discussed in Section 2.3.3.2.2 and evaluated in Section 3.7 of the FuelSolutions™ Storage System FSAR.

The FuelSolutions™ W21 canister is evaluated for the deceleration loads resulting from this non-mechanistic drop scenario.

11.2.4.1 Postulated Cause of the Event

The postulated cause of this event is non-mechanistic and is discussed in Section 11.2.4.1 of the FuelSolutions™ Storage System FSAR.

11.2.4.2 Detection of the Event

The detection of this event is discussed in Section 11.2.4.2 of the FuelSolutions™ Storage System FSAR.

11.2.4.3 Summary of Event Consequences and Regulatory Compliance

Structural

The canister shell assembly stress evaluation is provided in Section 3.7.5 of this FSAR.

The resulting stresses due to the postulated transfer cask side drop accident for the canister shell assembly components are summarized in Table 3.7-4. Similarly, the canister basket stress results are provided in Table 3.7-5. All stresses are within allowable values.

Also as discussed in Section 3.7.5 of this FSAR, the guide tube experiences a small permanent deformation as a result of this accident. The effects of this deformation on criticality are discussed in the criticality evaluation below.

Thermal

As discussed in Section 11.2.4.3 of the FuelSolutions™ Storage System FSAR, the transfer cask liquid neutron shield is assumed to be lost as a result of the side drop impact. This results in a reduction of the thermal conductivity through the cask wall, as the drained neutron shield cavity is assumed to be filled with air. The thermal effects of the transfer cask side drop event (i.e., loss of neutron shield) is discussed in Section 4.6.2 of this FSAR. The resulting maximum fuel cladding and canister material temperatures are well below the short-term allowable cladding temperature and the canister structural material allowable temperatures applicable for this postulated accident.

Shielding

There is no effect on the shielding performance of the canister as a result of this event. The effects on the shielding performance of the transfer cask, with the loss of neutron shielding, is evaluated in Section 11.2.4 of the FuelSolutions™ Storage System FSAR.

Criticality

As discussed in the structural evaluation above, the guide tube experiences permanent deformation as a result of this postulated accident. The criticality analysis for the accident condition is provided in Section 6.4.2 of this FSAR. As shown therein, the canister remains

subcritical for optimum moderator conditions, including all biases and uncertainties, for the postulated accident configuration.

Confinement

There is no effect on the confinement performance of the canister as a result of this postulated accident, as the canister shell components remain within their allowable stress values. Therefore, the canister shell will remain intact.

Radiation Protection

As there is no effect on shielding or confinement performance of the canister, the canister has no effect on public exposures as a result of this event. The discussion of public exposure resulting from the effects of this postulated accident on the transfer cask is provided in Section 11.2.4.3 of the FuelSolutions™ Storage System FSAR.

Occupational exposure resulting from recovery from this event is also discussed in Section 11.2.4.3 of the FuelSolutions™ Storage System FSAR.

11.2.4.4 Corrective Action

The corrective action for this event is discussed in Section 11.2.4.4 of the FuelSolutions™ Storage System FSAR.

11.2.5 Fire

The FuelSolutions™ W21 canister in the storage cask is evaluated for a postulated accidental fire event. Evaluation of the storage cask and the transfer cask for this postulated fire accident is discussed in Section 11.2.5 of the FuelSolutions™ Storage System FSAR. The postulated fire accident is defined in Section 2.3.3.4 of the FuelSolutions™ Storage System FSAR.

11.2.5.1 Postulated Cause of the Event

The postulated cause of this event is discussed in Section 11.2.5.1 of the FuelSolutions™ Storage System FSAR.

11.2.5.2 Detection of the Event

The detection of this event is discussed in Section 11.2.5.2 of the FuelSolutions™ Storage System FSAR.

11.2.5.3 Summary of Event Consequences and Regulatory Compliance

Structural

As documented in Section 4.6, the maximum canister pressure as a result of the postulated fire accident is less than 68.7 psig.

The fire condition pressure is much less than the design basis accident pressure of 69 psig. Further, the external heating will act to reduce the thermal gradients on the canister, resulting in lower thermal gradients and therefore, lower stresses than for the normal ambient conditions, as discussed in Section 3.7.6.

Thermal

As discussed in Section 4.6, the fuel cladding and basket structural component temperatures for the postulated fire event result in temperatures which are less than the fuel cladding and material allowable temperatures.

Shielding

There is no effect on the shielding performance of the canister as a result of this event.

Criticality

There is no effect on the criticality control performance of the canister as a result of this event.

Confinement

There is no effect on the confinement performance of the canister as a result of this event.

Radiation Protection

As there is no degradation in shielding or confinement, there is no effect on public exposures as a result of this event. Occupational exposure resulting from recovery from this event is discussed in Section 11.2.5.3 of the FuelSolutions™ Storage System FSAR.

11.2.5.4 Corrective Action

The corrective action for this event is discussed in Section 11.2.5.4 of the FuelSolutions™ Storage System FSAR.

11.2.6 Flood

The FuelSolutions™ W21 canister is evaluated for the effects of an enveloping design basis flood, postulated to result from natural phenomena such as a tsunami and seiches, as specified by 10CFR72.122(b). For the purpose of this evaluation, a 50 foot flood height is used as defined in Section 2.3.4.1.

11.2.6.1 Postulated Cause of the Event

The postulated cause of this event is discussed in Section 11.2.7.1 of the FuelSolutions™ Storage System FSAR.

11.2.6.2 Detection of the Event

The detection of this event is discussed in Section 11.2.7.2 of the FuelSolutions™ Storage System FSAR.

11.2.6.3 Summary of Event Consequences and Regulatory Compliance

Structural

The storage cask has been shown not to tip over during flooding, and therefore, the canister is only subjected to the pressure effects of this postulated event. The 50-foot head of water results in an external pressure of 21.7 psig on the canister, as discussed in Section 2.3.4.1. As discussed in Section 3.7.7, the effects of this loading are bounded by the accident internal pressure effects evaluated in Section 11.2.8.

Thermal

Under postulated flood conditions, the storage cask vents and annular space are filled with water. While this precludes the natural convective air flow relied upon for heat removal during normal storage conditions, the water provides superior heat transfer, and the large thermal mass of the flood water results in lower temperatures than those associated with normal storage conditions as discussed in Section 4.6.1 of the FuelSolutions™ Storage System FSAR. For the case of only the inlet vents blocked, either by flood waters or by debris left as a result of flooding, this condition is bounded by the blocked vent case discussed in Section 11.2.1.

Shielding

There is no reduction in shielding performance as a result of this postulated accident.

Criticality

There is no reduction in criticality control performance of the canister as a result of this postulated accident. Since the canister shell assembly remains intact, there is no water inside the canister as a result of this event. The presence of water outside the canister and cask is bounded by the reflector conditions assumed in the criticality analysis as discussed in Chapter 6.

Confinement

There is no reduction in confinement capability of the canister as a result of this postulated accident.

Radiation Protection

Since there is no effect on shielding and confinement performance of the canister, there is no effect on radiation protection.

11.2.6.4 Corrective Action

The corrective action for this event is discussed in Section 11.2.7.4 of the FuelSolutions™ Storage System FSAR.

11.2.7 Earthquake

The FuelSolutions™ W21 canister is evaluated for the effects of seismic loads during dry storage in the storage cask and during on-site transport in the transfer cask.

11.2.7.1 Postulated Cause of the Event

The postulated cause of this event is discussed in Section 11.2.9.1 of the FuelSolutions™ Storage System FSAR.

11.2.7.2 Detection of the Event

The detection of this event is discussed in Section 11.2.9.2 of the FuelSolutions™ Storage System FSAR.

11.2.7.3 Summary of Event Consequences and Regulatory Compliance

Structural

Design basis seismic accelerations for the canister are evaluated in Section 3.7.8 of this FSAR. The resulting basket stresses are summarized in Table 3.7-5. All stresses are within the allowable stress values.

As discussed in Section 3.7.8, the canister shell stresses for this event are bounded by those for the postulated cask drop and tip-over conditions.

Thermal

There is no effect on the thermal performance of the canister as a result of this postulated accident.

Shielding

There is no effect on the shielding performance of the canister as a result of this postulated accident.

Criticality

There is no effect on the criticality control performance of the canister as a result of this postulated accident.

Confinement

There is no effect on the confinement performance of the canister as a result of this postulated accident.

Radiation Protection

Since there is no effect on shielding and confinement, there is no effect on radiation protection.

11.2.7.4 Corrective Action

Since the canister is not compromised by this postulated accident, and since the storage cask and transfer cask are not compromised as documented in the FuelSolutions™ Storage System FSAR, no corrective actions are required.

11.2.8 Accident Internal Pressure

As discussed in Section 4.6 and summarized in Table 4.6-2, the accident condition internal pressure for the FuelSolutions™ W21 canister is 68.7 psig, which is less than the design basis pressure of 69 psig. The accident pressure is based on the required helium backfill in accordance with the *technical specification* provided in Section 12.3, elevated to the extreme off-normal condition canister cavity gas temperature. In addition, a concurrent non-mechanistic failure of 100% of the fuel rods with complete release of their fill gas and 30% of their fission gasses into the canister cavity elevated to the extreme off-normal condition canister cavity gas temperature is assumed, as defined in Section 2.3.3.4.

11.2.8.1 Postulated Cause of the Event

After fuel assembly loading, the canister is drained, dried, and backfilled with an inert cover gas (helium) to assure long-term cladding integrity during dry storage. Therefore, the probability of failure of intact rods in dry storage is low. Nonetheless, such an event is postulated and analyzed.

11.2.8.2 Detection of the Event

No monitoring of the canister internal pressure is required since the canister is adequate to withstand this postulated event.

11.2.8.3 Summary of Event Consequences and Regulatory Compliance

Structural

The stress evaluation of the canister for the accident internal pressure condition is discussed in Section 3.7.9 of this FSAR. The resulting stresses for this condition are provided in Table 3.7-4. All stresses are within allowable values. The accident pressure load has no effect on the basket assembly.

Thermal

The canister internal pressure for accident conditions is performed using the methodology, material properties, thermal models, and design basis heat load described in Section 4.6 of this FSAR. The pressure results of the accident thermal analysis are provided in Table 4.6-2. The design basis internal pressure, which bounds this internal pressure, is used in the structural evaluation described above.

Shielding

There is no effect on the shielding performance of the canister as a result of this postulated event.

Criticality

There is no effect on the criticality control features of the canister as a result of this postulated event.

Confinement

As discussed in the structural evaluation above, all stresses remain within allowable values, assuring canister integrity. The effects of this event on the release for the design basis canister leak rate is evaluated in Section 7.3 of this FSAR.

Radiation Protection

The postulated release will result in a minimal increase in dose to the public. The analysis of this event is provided in Section 7.3 of this FSAR. As shown therein, this event results in dose rates to the public less than the limit established by 10CFR72.106(b).

11.2.8.4 Corrective Actions

The FuelSolutions™ W21 canister is designed to safely accommodate the internal pressure resulting from this postulated event. No corrective actions are required.

11.2.9 Accident Condition Load Combinations

Load combinations are performed for the FuelSolutions™ W21 canister as discussed in Section 3.7.10. The load combinations include normal loads, which are evaluated in Section 3.5; off-normal loads, which are evaluated in Section 3.6; and accident loads, which are evaluated in Section 3.7. The load combination results for the canister shell assembly are provided in Tables 3.7-11 through 3.7-15. The load combination results for the canister basket assembly are provided in Table 3.7-16. As shown in the tables, all stresses are within allowable values.

12. OPERATING CONTROLS AND LIMITS

This chapter includes operational controls and limits *(technical specifications)* specific to the FuelSolutions™ W21 canister, including canister loading with qualified fuel assemblies. The remaining controls and limits for the loading, closure, transfer, and dry storage of sealed FuelSolutions™ W21 canisters using the FuelSolutions™ W100 Transfer Cask and the FuelSolutions™ W150 Storage Cask in an ISFSI or CISF, as well as for canister retrieval and unloading, are presented in Chapter 12 of the FuelSolutions™ Storage System FSAR.[1]

[1] WSNF-220, *FuelSolutions™ Storage System Final Safety Analysis Report*, NRC Docket No. 72-1026, BNG Fuel Solutions.

This page intentionally left blank.

12.1 Proposed Operating Controls and Limits

The areas where controls and limits specific to FuelSolutions™ W21 canister are necessary to assure safe operation are shown in Table 12.1-1. The conditions and other characteristics noted in the table are selected based on the safety analyses for design basis normal, off-normal, and postulated accident conditions documented in previous chapters of this FSAR and the FuelSolutions™ Storage System FSAR. The *technical specifications* are provided in Section 12.3.

Table 12.1-1 - Summary of FuelSolutions™ W21 Canister Operating Controls and Limits

Condition to be Controlled	Applicable Technical Specifications		FSAR Location	
			Storage System	Canister
Criticality Control	2.1.1	Fuel to be Stored		✓
Confinement Boundary Integrity	3.1.3	Canister Leak Rate	✓	
	3.1.4	Hydraulic Ram Force During Horizontal Canister Transfer	✓	
Fuel Integrity	3.1.1	Canister Helium Backfill Density	✓	
	3.1.3	Canister Leak Rate	✓	
	3.3.2	Storage Cask Periodic Monitoring		✓
Radiological Protection	3.2.1	Canister Surface Contamination	✓	
	3.4.1	Storage Cask Dose Rates	✓	
	3.6.1	Transfer Cask Surface Contamination	✓	
Heat Removal Capability	3.1.1	Canister Helium Backfill Density		✓
	3.3.2	Storage Cask Periodic Monitoring		✓
Structural Integrity	3.1.5	Canister Vertical Time Limit in Transfer Cask		✓
	3.3.2	Storage Cask Periodic Monitoring		✓
	3.3.3	Storage Cask Temperatures During Horizontal Transfer		✓
	3.5.1	Transfer Cask Structural Shell Temperature	✓	

12.2 Development of Operating Controls and Limits

The FuelSolutions™ W21 canister operating controls and limits, and their bases, are provided in Section 12.3 of this FSAR. The required dry run activities are discussed in Section 12.2 of the FuelSolutions™ Storage System FSAR.

This page intentionally left blank.

12.3 Supplemental Data

12.3.1 Technical Specifications and Bases for the FuelSolutions™ W21 Canister

The *technical specifications* and bases, in the Improved Technical Specification (ITS) format, are provided in this section.

This page intentionally left blank.

TECHNICAL SPECIFICATION

FOR THE FuelSolutions™ W21 CANISTER

to be used concurrent with

the Storage System Technical Specification

Amendment 4

Page

1.0 USE AND APPLICATION 1.1-1
1.1 Definitions 1.1-1
1.2 Logical Connectors 1.2-1
1.3 Completion Times 1.3-1
1.4 Frequency 1.4-1

2.0 FUNCTIONAL AND OPERATING LIMITS 2.0-1
2.1 Functional and Operating Limits 2.0-1
2.2 Functional and Operating Limits Violations 2.0-1

3.0 LIMITING CONDITION FOR OPERATION (LCO) APPLICABILITY 3.0-1

3.0 SURVEILLANCE REQUIREMENT (SR) APPLICABILITY 3.0-2

3.1 CANISTER INTEGRITY 3.1-1
3.1.1 W21 Canister Helium Backfill Density 3.1-1
3.1.2 Canister Vacuum Drying Pressure 3.1-2
3.1.3 Canister Leak Rate 3.1-3
3.1.4 Hydraulic Ram Force During Horizontal Canister Transfer 3.1-4
3.1.5 W21 Canister Vertical Time Limit in Transfer Cask 3.1-5

3.2 CANISTER RADIATION PROTECTION 3.2-1
3.2.1 Canister Surface Contamination 3.2-1

3.3 STORAGE CASK INTEGRITY 3.3-1
3.3.1 (Deleted) . . . . . 3.3-1 |
3.3.2 Storage Cask Periodic Monitoring . . . . . 3.3-2 |
3.3.3 Storage Cask Temperatures During Horizontal Transfer . . . . . 3.3-6 |

3.4 TRANSFER CASK INTEGRITY 3.4-1
3.4.1 Transfer Cask Structural Shell Temperature 3.4-1

3.5 TRANSFER CASK RADIATION PROTECTION 3.5-1
3.5.1 Transfer Cask Surface Contamination 3.5-1

4.0 DESIGN FEATURES 4.0-1
4.1 Storage System 4.0-1
4.2 Storage Pad 4.0-2
4.3 Site Specific Parameters and Analyses 4.0-2

Page

5.0 ADMINISTRATIVE CONTROLS 5.0-1
5.1 Training Modules 5.0-1
5.2 Preoperational Testing and Training Exercises 5.0-1
5.3 Programs 5.0-1
5.4 Special Requirements for First System in Place 5.0-1

LIST OF TABLES

Table 2.1-1 FuelSolutions™ W21 Loading Specification W21-1 . . . . . 2.0-2
Table 2.1-2 FuelSolutions™ W21 Loading Specification W21-2 . . . . . 2.0-3
Table 2.1-3 Acceptable Fuel Assemblies and Parameters for Loading Specification W21-1 . . . . . 2.0-4
Table 2.1-4 Acceptable Fuel Assemblies and Parameters for Loading Specification W21-2 . . . . . 2.0-11
Table 2.1-5 Fuel Cooling Table W21-1-A 2.0-19
Table 2.1-6 Fuel Cooling Table W21-1-B 2.0-20
Table 2.1-7 Fuel Cooling Table W21-2-A 2.0-21
Table 2.1-8 Fuel Cooling Table W21-2-B 2.0-22
Table 4.1-1 FuelSolutions™ W21 Canister ASME Code Requirements Compliance Summary 4.0-3

1.0 USE AND APPLICATION

1.1 Definitions

NOTE

The defined terms of this section appear in capitalized type and are applicable throughout these Technical Specifications and Bases.

Term	Definition
ACTIONS	ACTIONS shall be that part of a Specification that prescribes Required Actions to be taken under designated Conditions within specified Completion Times.
CANISTER	The CANISTER is the storage container for SFAs approved for use at the ISFSI.
INDEPENDENT SPENT FUEL STORAGE INSTALLATION (ISFSI)	The facility within the perimeter fence licensed for storage of spent fuel within CANISTERs.
INTACT FUEL	Fuel assemblies with no known or suspected cladding defects greater than hairline cracks or pinhole leaks.
LOADING OPERATIONS	LOADING OPERATIONS include all licensed activities on a CANISTER while it is being loaded with fuel assemblies. LOADING OPERATIONS begin when the first fuel assembly is placed in the CANISTER and end when the CANISTER outer closure plate to shell weld examination is complete.
SPENT FUEL ASSEMBLIES (SFAs)	Irradiated nuclear fuel assemblies that are to be placed in a CANISTER for dry storage.
SPENT FUEL STORAGE SYSTEM (SFSS)	The storage components including the CANISTER, STORAGE CASK, and TRANSFER CASK.
STORAGE CASK	The cask that provides a shielded, ventilated storage environment for the loaded CANISTER. This cask is used for TRANSFER OPERATIONS.
STORAGE OPERATIONS	STORAGE OPERATIONS include all licensed activities that are performed at the ISFSI while a CANISTER containing spent fuel is sitting inside a STORAGE CASK on a storage pad within the ISFSI.

1.1 Definitions

Term	Definition
TRANSFER CASK	The cask that is used for SFA LOADING OPERATIONS and UNLOADING OPERATIONS, and for TRANSFER OPERATIONS.
TRANSFER OPERATIONS	TRANSFER OPERATIONS include all licensed activities that are performed on a CANISTER loaded with one or more fuel assemblies when it is being moved to and from the ISFSI. For movement to the ISFSI, TRANSFER OPERATIONS begin when the CANISTER outer closure plate to shell weld inspection is complete and end when the CANISTER is in the STORAGE CASK in its storage position on the storage pad within the ISFSI. For movement from the ISFSI, TRANSFER OPERATIONS begin when the STORAGE CASK is moved and end when the CANISTER is moved into a transportation cask or the spent fuel building.
UNLOADING OPERATIONS	UNLOADING OPERATIONS include all licensed activities on a CANISTER to be unloaded of the contained fuel assemblies. UNLOADING OPERATIONS begin when the CANISTER is ready to initiate removal of the CANISTER outer closure plate and end when the last fuel assembly is removed from the CANISTER.

1.0 USE AND APPLICATION

1.2 Logical Connectors

PURPOSE

The purpose of this section is to explain the meaning of logical connectors.

Logical connectors are used in Technical Specifications (TS) to discriminate between, and yet connect, discrete Conditions, Required Actions, Completion Times, Surveillances, and Frequencies. The only logical connectors that appear in TS are AND and OR. The physical arrangement of these connectors constitutes logical conventions with specific meanings.

BACKGROUND

Several levels of logic may be used to state Required Actions. These levels are identified by the placement (or nesting) of the logical connectors and by the number assigned to each Required Action. The first level of logic is identified by the first digit of the number assigned to a Require Action and the placement of the logical connector in the first level of nesting (i.e., left justified with the number of the Required Action). The successive levels of logic are identified by additional digits of the Required Action number and by successive indentations of the logical connectors.

When logical connectors are used to state a Condition, Completion Time, Surveillance, or Frequency, only the first level of logic is used, and the logical connector is left justified with the statement of the Condition, Completion Time, Surveillance, or Frequency.

EXAMPLES

The following examples illustrate the use of logical connectors.

EXAMPLE 1.2-1

ACTIONS

CONDITION	REQUIRED ACTION	COMPLETION TIME
A. LCO not met	A.1 Verify... AND A.2 Restore...	

In this example the logical connector AND is used to indicate that when in Condition A, both Required Actions A.1 and A.2 must be completed.

EXAMPLES (continued)

EXAMPLE 1.2-2

ACTIONS

CONDITION	REQUIRED ACTION	COMPLETION TIME
A. LCO not met	A.1 Stop... OR A.2.1 Verify... AND A.2.2.1 Reduce... OR A.2.2.2 Perform... OR A.3 Remove...	

This example represents a more complicated use of logical connectors. Required Actions A.1, A.2, and A.3 are alternative choices, only one of which must be performed as indicated by the use of the logical connector OR and the left justified placement. Any one of these three Actions may be chosen. If A.2 is chosen, then both A.2.1 and A.2.2 must be performed as indicated by the logical connector AND. Required Action A.2.2 is met by performing A.2.2.1 or A.2.2.2. The indented position of the logical connector OR indicates that A.2.2.1 and A.2.2.2 are alternative choices, only one of which must be performed.

1.0 USE AND APPLICATION

1.3 Completion Times

PURPOSE	The purpose of this section is to establish the Completion Time convention and to provide guidance for its use.
BACKGROUND	Limiting Conditions for Operation (LCOs) specify the lowest functional capability or performance levels of equipment required for safe operation of the facility. The ACTIONS associated with an LCO state Conditions that typically describe the ways in which the requirements of the LCO can fail to be met. Specified with each stated Condition are Required Action(s) and Completion Time(s).
DESCRIPTION	The Completion Time is the amount of time allowed for completing a Required Action. It is referenced to the time of discovery of a situation (e.g., equipment or variable not within limits) that requires entering an ACTIONS Condition unless otherwise specified, providing the facility is in a specified condition stated in the Applicability of the LCO. Required Actions must be completed prior to the expiration of the specified Completion Time. An ACTIONS Condition remains in effect and the Required Actions apply until the Condition no longer exists or the facility is not within the LCO Applicability. Once a Condition has been entered, subsequent subsystems, components, or variables expressed in the Condition, discovered to be not within limits, will <u>not</u> result in separate entry into the Condition unless specifically stated. The Required Actions of the Condition continue to apply to each additional failure, with Completion Times based on initial entry into the Condition.

1.3 Completion Times

EXAMPLES

The following examples illustrate the use of Completion Times with different types of Conditions and changing Conditions.

EXAMPLE 1.3-1

ACTIONS

CONDITION	REQUIRED ACTION	COMPLETION TIME
B. Required Action and associated Completion Time not met.	B.1 Perform Action B.1. AND B.2 Perform Action B.2.	12 hours 36 hours

Condition B has two Required Actions. Each Required Action has its own separate Completion Time. Each Completion Time is referenced to the time that Condition B is entered.

The Required Actions of Condition B are to complete action B.1 within 12 hours AND complete action B.2 within 36 hours. A total of 12 hours is allowed for completing action B.1 and a total of 36 hours (not 48 hours) is allowed for completing action B.2 from the time that condition B was entered. If action B.1 is completed within 6 hours, the time allowed for completing action B.2 is the next 30 hours because the total time allowed for completing action B.2 is 36 hours.

EXAMPLES
(continued)

EXAMPLE 1.3-2

ACTIONS

CONDITION	REQUIRED ACTION	COMPLETION TIME
A. One system not within limit.	A.1 Restore system to within limit.	7 days
B. Required Action and associated Completion Time not met.	B.1 Perform Action B.1. AND B.2 Perform Action B.2.	12 hours 36 hours

When it is determined that a system does not meet the LCO, Condition A is entered. If the system is not restored within 7 days, Condition B is also entered and the Completion Time clocks for Required Actions B.1 and B.2 start. If the system is restored after Condition B is entered, Condition A and B are exited, and therefore, the Required Actions of Condition B may be terminated.

EXAMPLES (continued)

EXAMPLE 1.3-3

ACTIONS

NOTE

Separate Condition entry is allowed for each component.

CONDITION	REQUIRED ACTION	COMPLETION TIME
A. LCO not met.	A.1 Restore compliance with LCO.	4 hours
B. Required Action and associated Completion Time not met.	B.1 Perform Action B.1. AND B.2 Perform Action B.2.	12 hours 36 hours

The Note above the ACTIONS Table is a method of modifying the Completion Time tracking. If this method of modifying the Completion Time tracking were only applicable to a specific Condition, the Note would appear in that Condition rather than at the top of the ACTIONS Table.

The Note allows Condition A to be entered separately for each component, and Completion Times tracked on a per component basis. When a component does not meet the LCO, Condition A is entered and its Completion Time starts. If it is determined that subsequent components do not meet the LCO, Condition A is entered for each component and separate Completion Times start and are tracked for each component.

IMMEDIATE

When “Immediately” is used as a Completion Time, the COMPLETION TIME Required Action should be pursued without delay and in a controlled manner.

1.0 USE AND APPLICATION

1.4 Frequency

PURPOSE	The purpose of this section is to define the proper use and application of Frequency requirements.
DESCRIPTION	Each Surveillance Requirement (SR) has a specified Frequency in which the surveillance must be met in order to meet the associated Limiting Condition for Operation (LCO). An understanding of the correct application of the specified Frequency is necessary for compliance with the SR. The “specified Frequency” is referred to throughout this section and each of the Specifications of Section 3.0, Surveillance Requirement (SR) Applicability. The “specified Frequency” consists of the requirements of the Frequency column of each SR, as well as certain Notes in the Surveillance column that modify performance requirements. Situations where a Surveillance could be required (i.e., its Frequency could expire), but where it is not possible or not desired that it be performed until sometime after the associated LCO is within its Applicability, represent potential SR 3.0.4 conflicts. To avoid these conflicts, the SR (i.e., the Surveillance or the Frequency) is stated such that it is only “required” when it can be and should be performed. With an SR satisfied, SR 3.0.4 imposes no restriction. The use of “met” or “performed” in these instances conveys specific meaning. A Surveillance is “met” only when the acceptance criteria are satisfied. Known failure of the requirements of a Surveillance, even without a Surveillance specifically being “performed,” constitutes a Surveillance not “met.”

EXAMPLES

The following examples illustrate the various ways that Frequencies are specified:

EXAMPLE 1.4-1

SURVEILLANCE REQUIREMENTS

SURVEILLANCE	FREQUENCY
Verify pressure within limit.	12 hours

Example 1.4-1 contains the type of SR most often encountered in the Technical Specifications (TS). The Frequency specifies an interval (12 hours) during which the associated Surveillance must be performed at least one time. Performance of the Surveillance initiates the subsequent interval. Although the Frequency is stated as 12 hours, an extension of the time interval to 1.25 times the interval specified in the Frequency is allowed by SR 3.0.2 for operational flexibility. The measurement of this interval continues at all times, even when the SR is not required to be met per SR 3.0.1 (such as when it is determined the equipment does not meet the LCO, a variable is outside specified limits, or the unit is outside the Applicability of the LCO). If the interval specified by SR 3.0.2 is exceeded while the cask is in a condition specified in the Applicability of the LCO, the LCO is not met in accordance with SR 3.0.1.

If the interval as specified by SR 3.0.2 is exceeded while the unit is not in a condition specified in the Applicability of the LCO for which performance of the SR is required, the Surveillance must be performed within the Frequency requirements of SR 3.0.2 prior to entry into the specified condition. Failure to do so would result in a violation of SR 3.0.4.

EXAMPLES (continued)

EXAMPLE 1.4-2

SURVEILLANCE REQUIREMENTS

SURVEILLANCE	FREQUENCY
Verify flow is within limits.	Once within 12 hours prior to starting activity AND 24 hours thereafter

Example 1.4-2 has two Frequencies. The first is a one-time performance Frequency, and the second is of the type shown in Example 1.4-1. The logical connector "AND" indicates that both Frequency requirements must be met. Each time the example activity is to be performed, the Surveillance must be performed prior to starting the activity.

The use of "once" indicates a single performance will satisfy the specified Frequency (assuming no other Frequencies are connected by "AND"). This type of Frequency does not qualify for the 25% extension allowed by SR 3.0.2.

"Thereafter" indicates future performances must be established per SR 3.0.2, but only after a specified condition is first met (i.e., the "once" performance in this example). If the specified activity is canceled or not performed, the measurement of both intervals stops. New intervals start upon preparing to restart the specified activity.

2.0 FUNCTIONAL AND OPERATING LIMITS

2.1 Functional and Operating Limits

2.1.1 Fuel to be Stored in the FuelSolutions™ W21 Canister

SFAs meeting the limits specified in Tables 2.1-1 and 2.1-2 may be stored in a W21 CANISTER.

2.2 Functional and Operating Limits Violations

If any Functional and Operating Limits are violated, the following actions shall be completed. These actions are not a substitute for the reporting requirements contained in 10CFR72.75.

2.2.1 The affected fuel assemblies shall be placed in a safe condition without delay and in a controlled manner.

2.2.2 The NRC Operations Center shall be notified within 24 hours.

2.2.3 A special report will be provided to NRC within 30 days that describes the cause of the violation, the actions to restore compliance, and the actions to prevent recurrence.

2.0 Functional and Operating Limits

Table 2.1-1
FuelSolutions™ W21 Loading Specification W21-1

W21-1 Payload Configuration Parameter	Full Loading of 21 Intact Fuel Assemblies Limit/Specification
Payload Description:	≤ 21 PWR fuel assemblies or PWR fuel assemblies with control components, as defined in Table 2.1-3. If less than 21 fuel assemblies are loaded, a dummy fuel assembly shall be placed into each empty CANISTER basket guide tube. Each dummy fuel assembly shall be the approximate weight and size of the actual fuel being loaded.
Maximum Weight per Assembly:	≤ 1,680 pounds
Heat Load Limit per Assembly:	1.05 kW
Cladding Material/Condition:	Intact zircaloy-clad fuel assemblies with no known or suspected cladding defects greater than hairline cracks or pinhole leaks. Partial fuel assemblies, i.e., fuel assemblies from which fuel rods are missing, must not be loaded into the CANISTER unless dummy fuel rods are inserted into the assembly in the locations of the missing rods. The dummy fuel rods shall displace an amount of water equal to that displaced by the original fuel rods.
Initial Enrichment:	The maximum acceptable enrichment varies by fuel assembly class and type and shall not exceed the enrichments defined in Table 2.1-3.
Burnup:	≤ 60,000 MWd/MTU.[1, 2]
Cooling Time:	The minimum acceptable cooling time varies by fuel assembly class and enrichment, as a function of burnup; and is also dependent on the total cobalt content of the fuel and control components. The effects of the maximum acceptable decay heat, initial uranium content, and gamma and neutron sources are incorporated into the minimum cooling time determination. Fuel assemblies shall not be stored with less than the minimum acceptable cooling time indicated in Tables 2.1-5 and 2.1-6.

Notes:

(1) The exposure (burnup) of any inserted control component must not exceed that of the host assembly.

(2) For burnups exceeding 45,000 MWd/MTU, cladding oxide layer thickness is limited to 70 Fm, to be determined in accordance with TS 5.3.7.

Table 2.1-2
FuelSolutions™ W21 Loading Specification W21-2

W21-2 Payload Configuration Parameter	Partial Loading of 20 Intact Fuel Assemblies Limit/Specification
Payload Description:	≤ 20 PWR fuel assemblies or PWR fuel assemblies with control components, as defined in Table 2.1-4. The center storage location shall not contain a fuel assembly. If less than 20 fuel assemblies are loaded, a dummy fuel assembly shall be placed into each empty CANISTER basket guide tube (except for the center guide tube). Each dummy fuel assembly shall be the approximate weight and size of the actual fuel being loaded.
Maximum Weight per Assembly	≤ 1,680 pounds
Heat Load Limit per Assembly:	1.05 kW
Cladding Material/Condition:	Intact zircaloy-clad fuel assemblies with no known or suspected cladding defects greater than hairline cracks or pinhole leaks. Partial fuel assemblies, i.e., fuel assemblies from which fuel rods are missing, must not be loaded into the CANISTER unless dummy fuel rods are inserted into the assembly in the locations of the missing rods. The dummy fuel rods shall displace an amount of water equal to that displaced by the original fuel rods.
Initial Enrichment:	The maximum acceptable enrichment shall not exceed the enrichments defined in Table 2.1-4.
Burnup:	≤ 60,000 MWd/MTU.[1, 2]
Cooling Time:	The minimum acceptable cooling time varies by fuel assembly class and enrichment, as a function of burnup; and is also dependent on the total cobalt content of the fuel and control components. The effects of the maximum acceptable decay heat, initial uranium content, and gamma and neutron sources are incorporated into the minimum cooling time determination. Fuel assemblies shall not be stored with less than the minimum acceptable cooling time indicated in Tables 2.1-7 and 2.1-8.

Notes:
(1) The exposure (burnup) of any inserted control component must not exceed that of the host assembly.
(2) For burnups exceeding 45,000 MWd/MTU, cladding oxide layer thickness is limited to 70 Fm, to be determined in accordance with TS 5.3.7.

Table 2.1-3
Acceptable Fuel Assemblies and Parameters
for Loading Specification W21-1 (7 Pages)

Assembly Class[1]	Assembly Type	Max. Uranium Loading (kg)	W21-1 Initial Enrich. (w/o ^{235}U)[2]	Number of Fuel Rods[3,4]	Min. Clad O.D. (in.)	Min. Clad Thick. (in.)[5]	Min. Pellet O.D. (in.)	Rod Pitch (in.)	Min. Bottom Nozzle (in.)	Max. Active Fuel Length (in.)	Applicable Cooling Table	
											Standard[6]	Limiting[7]
B&W 15x15[8]	B&W 15x15 Mark B	471	#4.7	208	0.43	0.0265	0.37	0.568	2.00	144	W21-1-B	W21-1-B
	B&W 15x15 Mark B2											
	B&W 15x15 Mark B3						0.3686					
	B&W 15x15 Mark B4						0.3675					
	B&W 15x15 Mark B4Z						0.3686				W21-1-A	W21-1-A
	B&W 15x15 Mark B5										W21-1-B	W21-1-B
	B&W 15x15 Mark B5Z										W21-1-A	W21-1-A
	B&W 15x15 Mark B6											

Table 2.1-3
Acceptable Fuel Assemblies and Parameters
for Loading Specification W21-1 (7 Pages)

Assembly Class[1]	Assembly Type	Max. Uranium Loading (kg)	W21-1 Initial Enrich. (w/o ^{235}U)[2]	Number of Fuel Rods[3,4]	Min. Clad O.D. (in.)	Min. Clad Thick. (in.)[5]	Min. Pellet O.D. (in.)	Rod Pitch (in.)	Min. Bottom Nozzle (in.)	Max. Active Fuel Length (in.)	Applicable Cooling Table	
											Standard[6]	Limiting[7]
B&W 15x15[8] (cont.)	B&W 15x15 Mark B7	471	#4.7	208	0.43	0.0265	0.3686	0.568	2.00	144	W21-1-A	W21-1-A
	B&W 15x15 Mark B8											
	Other[9]										W21-1-B	W21-1-B
B&W 17x17	B&W 17x17 Mark C	460	#4.6	264	0.377	0.022	0.3232	0.502	1.97	143	W21-1-B	W21-1-B
	Other[9]											
CE 14x14	CE 14x14	450	#5.0	176	0.440	0.026	0.3795	0.58	3.625	136.7/ 150	W21-1-A	W21-1-B
	CE 14x14 Maine Yankee						0.3759			136.7		
	CE 14x14 Westinghouse						0.3805		2.75			
	CE 14x14 ANF					0.031	0.37	0.58	2.68	127.99	W21-1-A	W21-1-A

Table 2.1-3
Acceptable Fuel Assemblies and Parameters
for Loading Specification W21-1 (7 Pages)

Assembly Class[1]	Assembly Type	Max. Uranium Loading (kg)	W21-1 Initial Enrich. (w/o ^{235}U)[2]	Number of Fuel Rods[3,4]	Min. Clad O.D. (in.)	Min. Clad Thick. (in.)[5]	Min. Pellet O.D. (in.)	Rod Pitch (in.)	Min. Bottom Nozzle (in.)	Max. Active Fuel Length (in.)	Applicable Cooling Table	
											Standard[6]	Limiting[7]
CE 14x14 (cont.)	CE 14x14 St. Lucie 1	450	#5.0	176	0.440	0.026	0.3795	0.568	3.625	136.7	W21-1-A	W21-1-B
	Other[9]											
CE 16x16	CE 16x16	450	#5.0	236	0.382	0.025	0.325	0.506	3.81	136.7	W21-1-A	W21-1-B
	Other[9]											
CE 16x16 System 80	CE System 80	450	#5.0	236	0.382	0.025	0.325	0.506	3.81/ 4.31	150	W21-1-A	W21-1-B
	Other[9]											
WE 14x14	WE 14x14 STD	450	#5.0	179	0.422	0.0243	0.3659	0.556	2.74	144	W21-1-B	W21-1-B
	WE 14x14 LOPAR											
	WE 14x14 OFA				0.4	0.0243	0.3444				W21-1-A	
	WE 14x14 top rod											W21-1-A

Table 2.1-3
Acceptable Fuel Assemblies and Parameters
for Loading Specification W21-1 (7 Pages)

Assembly Class[1]	Assembly Type	Max. Uranium Loading (kg)	W21-1 Initial Enrich. (w/o ^{235}U)[2]	Number of Fuel Rods[3,4]	Min. Clad O.D. (in.)	Min. Clad Thick. (in.)[5]	Min. Pellet O.D. (in.)	Rod Pitch (in.)	Min. Bottom Nozzle (in.)	Max. Active Fuel Length (in.)	Applicable Cooling Table	
											Standard[6]	Limiting[7]
WE 14x14 (cont.)	WE 14x14 B&W	450	#5.0	179	0.426	0.031	0.3565	0.556	N/A	144	W21-1-B	W21-1-B
	WE 14x14 ANF				0.417	0.0295	0.3505				W21-1-A	W21-1-A
	Other[9]										W21-1-B	W21-1-B
WE 15x15	WE 15x15 STD	471	#4.7	204	0.422	0.0243	0.3659	0.563	2.74	144	W21-1-B	W21-1-B
	WE 15x15 LOPAR											
	WE 15x15 OFA										W21-1-A	
	WE 15x15 B&W	450			0.42	0.024	0.3671		N/A		W21-1-B	
	Other[9]											
	WE 15x15 ANF		#4.9		0.424	0.03	0.3565				W21-1-A	W21-1-A
	Other[9]											
WE 17x17	WE 17x17 LOPAR	471	#4.7	264	0.374	0.0225	0.3225	0.496	2.383	144	W21-1-B	W21-1-B

Table 2.1-3
Acceptable Fuel Assemblies and Parameters
for Loading Specification W21-1 (7 Pages)

Assembly Class[1]	Assembly Type	Max. Uranium Loading (kg)	W21-1 Initial Enrich. (w/o ^{235}U)[2]	Number of Fuel Rods[3,4]	Min. Clad O.D. (in.)	Min. Clad Thick. (in.)[5]	Min. Pellet O.D. (in.)	Rod Pitch (in.)	Min. Bottom Nozzle (in.)	Max. Active Fuel Length (in.)	Applicable Cooling Table	
											Standard[6]	Limiting[7]
	WE 17x17 B&W	450				0.024	0.3195		N/A		W21-1-A	
	Other[9]										W21-1-B	
	WE 17x17 OFA		#4.6		0.36	0.0225	0.3088		2.383		W21-1-A	
	WE 17x17 ANF					0.025	0.303		N/A			
	Other[9]											
Fort Calhoun	CE 14x14 Fort Calhoun	450	#5.0	176	0.44	0.026	0.3765	0.58	3.17	128	W21-1-A	W21-1-B
	Other[9]											
Palisades	CE 15x15 Palisades	450	#5.0	208-216	0.4135	0.024	0.35	0.55	2.4	132.6	W21-1-A	W21-1-B
	ANF 15x15 Palisades											
	Other[9]											

Table 2.1-3
Acceptable Fuel Assemblies and Parameters
for Loading Specification W21-1 (7 Pages)

Assembly Class[1]	Assembly Type	Max. Uranium Loading (kg)	W21-1 Initial Enrich. (w/o ^{235}U)[2]	Number of Fuel Rods[3,4]	Min. Clad O.D. (in.)	Min. Clad Thick. (in.)[5]	Min. Pellet O.D. (in.)	Rod Pitch (in.)	Min. Bottom Nozzle (in.)	Max. Active Fuel Length (in.)	Applicable Cooling Table	
											Standard[6]	Limiting[7]
St. Lucie 2	CE 16x16 St. Lucie 2	450	#5.0	236	0.382	0.025	0.325	0.5063	3.81	136.7	W21-1-A	W21-1-B
	Other[9]											
Yankee Rowe	CE 15x16 Yankee Rowe	450	#5.0	231	0.3691	0.026	0.3105	0.472	7.19	91	W21-1-A	W21-1-A
	ANF 15x16 Yankee Rowe				0.365	0.024			7.44			
	Other[9]											
	UNC 15x16 Yankee Rowe			237				0.468	7.19		W21-1-B	W21-1-B
	Other[9]											

Table 2.1-3 Notes:

(1) Assembly Class is defined per EIA Spent Fuel Discharge Report.[2]

(2) Although fuel rods may contain burnable poison material such as Gd_2O_3, no credit is taken for this material. The rod enrichment is simply the initial UO_2, and any burnable absorbers are ignored.

(3) Any number of fuel rods may be replaced by zircaloy or stainless steel dummy pins, or by poison pins, as long as the replacement pin displaces as much water as the original fuel rod.

(4) Empty locations may contain nothing, hollow zircaloy or stainless rods (or rod clusters), solid zircaloy or stainless rods (or rod clusters), or poison rods (or rod clusters).

(5) Clad thickness is the as-designed fuel cladding thickness.

(6) The "Standard" table includes fuel assemblies with no control components or components with negligible core region cobalt activation. These include thimble plugs, control rod assemblies, and zircaloy clad burnable poison rod assemblies (BPRAs) and axial power shaping rod assemblies (APSRAs).

(7) The "Limiting" table includes fuel assemblies containing control components with potentially significant cobalt activation. These include neutron source assemblies, and stainless steel clad BPRAs and APSRAs.

(8) Gray APSRAs for B&W 15x15 fuel class are not qualified for storage at this time.

(9) Other fuel assemblies that meet the defined parameters are qualified for storage.

[2]Energy Information Administration, Spent Nuclear Fuel Discharges from U.S. Reactors 1993, U.S. Department of Energy, 1995.

Table 2.1-4
Acceptable Fuel Assemblies and Parameters
for Loading Specification W21-2 (8 Pages)

Assembly Class[1]	Assembly Type	Max. Uranium Loading (kg)	W21-2 Initial Enrich. (w/o ^{235}U)[2]	Number of Fuel Rods[3,4]	Min. Clad O.D. (in.)	Min. Clad Thick. (in.)[5]	Min. Pellet O.D. (in.)	Rod Pitch (in.)	Min. Bottom Nozzle (in.)	Max. Active Fuel Length (in.)	Applicable Cooling Table	
											Standard[6]	Limiting[7]
B&W 15x15[8]	B&W 15x15 Mark B	471	#5.0	208	0.43	0.0265	0.37	0.568	2.00	144	W21-2-B	W21-2-B
	B&W 15x15 Mark B2											
	B&W 15x15 Mark B3						0.3686					
	B&W 15x15 Mark B4						0.3675					
	B&W 15x15 Mark B4Z						0.3686				W21-2-A	W21-2-A
	B&W 15x15 Mark B5										W21-2-B	W21-2-B
	B&W 15x15 Mark B5Z										W21-2-A	W21-2-A
	B&W 15x15 Mark B6											

Table 2.1-4
Acceptable Fuel Assemblies and Parameters
for Loading Specification W21-2 (8 Pages)

Assembly Class[1]	Assembly Type	Max. Uranium Loading (kg)	W21-2 Initial Enrich. (w/o ^{235}U)[2]	Number of Fuel Rods[3,4]	Min. Clad O.D. (in.)	Min. Clad Thick. (in.)[5]	Min. Pellet O.D. (in.)	Rod Pitch (in.)	Min. Bottom Nozzle (in.)	Max. Active Fuel Length (in.)	Applicable Cooling Table	
											Standard[6]	Limiting[7]
B&W 15x15[8] (cont.)	B&W 15x15 Mark B7	471	#5.0	208	0.43	0.0265	0.3686	0.568	2.00	144	W21-2-A	W21-2-A
	B&W 15x15 Mark B8											
	Other[9]										W21-2-B	W21-2-B
B&W 17x17	B&W 17x17 Mark C	460	#4.9	264	0.377	0.022	0.3232	0.502	1.97	143	W21-2-B	W21-2-B
	Other[9]											
CE 14x14	CE 14x14	450	#5.0	176	0.440	0.026	0.3795	0.58	3.625	136.7/ 150	W21-2-A	W21-2-B
	CE 14x14 Maine Yankee						0.3759			136.7		
	CE 14x14 Westinghouse						0.3805		2.75			

Table 2.1-4
Acceptable Fuel Assemblies and Parameters
for Loading Specification W21-2 (8 Pages)

Assembly Class[1]	Assembly Type	Max. Uranium Loading (kg)	W21-2 Initial Enrich. (w/o ^{235}U)[2]	Number of Fuel Rods[3,4]	Min. Clad O.D. (in.)	Min. Clad Thick. (in.)[5]	Min. Pellet O.D. (in.)	Rod Pitch (in.)	Min. Bottom Nozzle (in.)	Max. Active Fuel Length (in.)	Applicable Cooling Table	
											Standard[6]	Limiting[7]
CE 14x14 (cont.)	CE 14x14 ANF	450	#5.0	176	0.440	0.026	0.37	0.58	2.68	127.99	W21-2-A	W21-2-A
	CE 14x14 St. Lucie 1					0.026	0.3795	0.568	3.625	136.7		W21-2-B
	Other[9]											
CE 16x16	CE 16x16	450	#5.0	236	0.382	0.025	0.325	0.506	3.81	136.7	W21-2-A	W21-2-B
	Other[9]											
CE 16x16 System 80	CE System 80	450	#5.0	236	0.382	0.025	0.325	0.506	3.81/ 4.31	150	W21-2-A	W21-2-B
	Other[9]											
WE 14x14	WE 14x14 STD	450	#5.0	179	0.422	0.0243	0.3659	0.556	2.74	144	W21-2-B	W21-2-B
	WE 14x14 LOPAR											

Table 2.1-4
Acceptable Fuel Assemblies and Parameters
for Loading Specification W21-2 (8 Pages)

Assembly Class[1]	Assembly Type	Max. Uranium Loading (kg)	W21-2 Initial Enrich. (w/o ^{235}U)[2]	Number of Fuel Rods[3,4]	Min. Clad O.D. (in.)	Min. Clad Thick. (in.)[5]	Min. Pellet O.D. (in.)	Rod Pitch (in.)	Min. Bottom Nozzle (in.)	Max. Active Fuel Length (in.)	Applicable Cooling Table	
											Standard[6]	Limiting[7]
WE 14x14 (cont.)	WE 14x14 OFA	450	#5.0	179	0.4	0.0243	0.3444	0.556	2.74	144	W21-2-A	W21-2-A
	WE 14x14 top rod											
	WE 14x14 B&W				0.426	0.031	0.3565		N/A		W21-2-B	W21-2-B
	WE 14x14 ANF				0.417	0.0295	0.3505				W21-2-A	W21-2-A
	Other[9]										W21-2-B	W21-2-B
WE 15x15	WE 15x15 STD	471	#5.0	204	0.422	0.0243	0.3659	0.563	2.74	144	W21-2-B	W21-2-B
	WE 15x15 LOPAR											
	WE 15x15 OFA										W21-2-A	

Table 2.1-4
Acceptable Fuel Assemblies and Parameters
for Loading Specification W21-2 (8 Pages)

Assembly Class[1]	Assembly Type	Max. Uranium Loading (kg)	W21-2 Initial Enrich. (w/o ^{235}U)[2]	Number of Fuel Rods[3,4]	Min. Clad O.D. (in.)	Min. Clad Thick. (in.)[5]	Min. Pellet O.D. (in.)	Rod Pitch (in.)	Min. Bottom Nozzle (in.)	Max. Active Fuel Length (in.)	Applicable Cooling Table	
											Standard[6]	Limiting[7]
WE 15x15 (cont.)	WE 15x15 B&W	450	#5.0	204	0.42	0.024	0.3671	0.563	N/A	144	W21-2-B	W21-2-B
	Other[9]											
	WE 15x15 ANF				0.424	0.03	0.3565				W21-2-A	W21-2-A
	Other[9]											
WE 17x17	WE 17x17 LOPAR	471	#5.0	264	0.374	0.0225	0.3225	0.496	2.383	144	W21-2-B	W21-2-B
	WE 17x17 B&W	450				0.024	0.3195		N/A		W21-2-A	
	Other[9]										W21-2-B	
	WE 17x17 OFA		#4.9		0.36	0.0225	0.3088		2.383		W21-2-A	
	Other[9]					0.025	0.303		N/A			

Table 2.1-4
Acceptable Fuel Assemblies and Parameters
for Loading Specification W21-2 (8 Pages)

Assembly Class[1]	Assembly Type	Max. Uranium Loading (kg)	W21-2 Initial Enrich. (w/o ^{235}U)[2]	Number of Fuel Rods[3,4]	Min. Clad O.D. (in.)	Min. Clad Thick. (in.)[5]	Min. Pellet O.D. (in.)	Rod Pitch (in.)	Min. Bottom Nozzle (in.)	Max. Active Fuel Length (in.)	Applicable Cooling Table	
											Standard[6]	Limiting[7]
WE 17x17 (cont.)	WE 17x17 ANF	450	#5.0	264	0.36	0.025	0.303	0.496	N/A	144	W21-2-A	W21-2-B
	Other[9]											
Fort Calhoun	CE 14x14 Fort Calhoun	450	#5.0	176	0.44	0.026	0.3765	0.58	3.17	128	W21-2-A	W21-2-B
	Other[9]											
Palisades	CE 15x15 Palisades	450	#5.0	208-216	0.4135	0.024	0.35	0.55	2.4	132.6	W21-2-A	W21-2-B
	ANF 15x15 Palisades											
	Other[9]											
St. Lucie 2	CE 16x16 St. Lucie 2	450	#5.0	236	0.382	0.025	0.325	0.5063	3.81	136.7	W21-2-A	W21-2-B
	Other[9]											

Table 2.1-4
Acceptable Fuel Assemblies and Parameters
for Loading Specification W21-2 (8 Pages)

Assembly Class[1]	Assembly Type	Max. Uranium Loading (kg)	W21-2 Initial Enrich. (w/o ^{235}U)[2]	Number of Fuel Rods[3,4]	Min. Clad O.D. (in.)	Min. Clad Thick. (in.)[5]	Min. Pellet O.D. (in.)	Rod Pitch (in.)	Min. Bottom Nozzle (in.)	Max. Active Fuel Length (in.)	Applicable Cooling Table	
											Standard[6]	Limiting[7]
Yankee Rowe	CE 15x16 Yankee Rowe	450	#5.0	231	0.3691	0.026	0.3105	0.472	7.19	91	W21-2-A	W21-2-A
	ANF 15x16 Yankee Rowe				0.365	0.024			7.44			
	Other[9]											
	UNC 15x16 Yankee Rowe			237				0.468	7.19		W21-2-B	W21-2-B
	Other[9]											

Table 2.1-4 Notes:

(1) Assembly Class is defined per EIA Spent Fuel Discharge Report.[3]

(2) Although fuel rods may contain burnable poison material such as Gd_2O_3, no credit is taken for this material. The rod enrichment is simply the initial UO_2, and any burnable absorbers are ignored.

(3) Any number of fuel rods may be replaced by zircaloy or stainless steel dummy pins, or by poison pins, as long as the replacement pin displaces as much water as the original fuel rod.

(4) Empty locations may contain nothing, hollow zircaloy or stainless rods (or rod clusters), solid zircaloy or stainless rods (or rod clusters), or poison rods (or rod clusters).

(5) Clad thickness is the as-designed fuel cladding thickness.

(6) The "Standard" table includes fuel assemblies with no control components or components with negligible core region cobalt activation. These include thimble plugs, control rod assemblies, and zircaloy clad burnable poison rod assemblies (BPRAs) and axial power shaping rod assemblies (APSRAs).

(7) The "Limiting" table includes fuel assemblies containing control components with potentially significant cobalt activation. These include neutron source assemblies, stainless steel clad BPRAs and APSRAs, and stainless steel dummy pins. Neutron source assemblies must also have a negligible residual neutron source (i.e., $<1x10^4$ n/s).

(8) Gray APSRAs for B&W 15x15 fuel class are not qualified for storage at this time.

(9) Other fuel assemblies that meet the defined parameters are qualified for storage.

[3]Energy Information Administration, Spent Nuclear Fuel Discharges from U.S. Reactors 1993, U.S. Department of Energy, 1995.

2.0 Functional and Operating Limits

Table 2.1-5
Fuel Cooling Table W21-1-A

APPLICABILITY:

Canister:	FuelSolutions™ W21-M and W21-T Canisters
Loading Specification:	W21-1 (Table 2.1-1)
Description:	Up to 21 fuel assemblies
SNF Assemblies:	Valid for the SNF assemblies listed in Table 2.1-3
Cobalt Range:	# 11 g in active fuel region (low-cobalt)

QUALIFICATION BASES:

Storage Cask Dose Rate	# 50 mrem/hr
Canister Heat Load	# 22.0 kW/Canister, and # 0.161 kW/inch-Canister

Maximum Burnup (MWD/MTU)(1,3)	Required Minimum Cooling Time (yr.)(1,2)							
	Minimum Initial Enrichment (w/o ^{235}U)							
	1.5	2.0	2.5	3.0	3.5	4.0	4.5	5.0
15,000	3.3	3.3	3.2	3.2	3.2	3.1	3.1	3.1
20,000	3.7	3.6	3.5	3.5	3.4	3.4	3.4	3.4
25,000	4.0	3.9	3.8	3.7	3.7	3.6	3.6	3.6
30,000	4.9	4.6	4.4	4.2	4.1	4.0	3.9	3.8
32,000	5.2	5.0	4.8	4.6	4.4	4.2	4.1	4.0
34,000	5.5	5.3	5.0	4.8	4.6	4.5	4.3	4.2
36,000	5.9	5.6	5.4	5.1	5.0	4.8	4.6	4.5
38,000	6.4	5.9	5.7	5.5	5.3	5.1	4.9	4.8
40,000	7.1	6.5	6.0	5.7	5.5	5.4	5.2	5.0
42,000	8.0	7.4	6.9	6.4	6.0	5.8	5.6	5.5
44,000	9.1	8.1	7.5	7.0	6.6	6.2	5.9	5.8
46,000	NQ (4)	9.3	8.3	7.7	7.3	6.9	6.5	6.2
48,000	NQ	10.6	9.5	8.6	7.9	7.5	7.2	6.8
50,000	NQ	NQ	10.7	9.7	8.9	8.2	7.7	7.4
52,000	NQ	NQ	12.3	11.0	9.9	9.2	8.6	8.0
54,000	NQ	NQ	NQ	12.7	11.4	10.4	9.6	9.0
56,000	NQ	NQ	NQ	14.5	13.1	11.8	10.8	10.0
58,000	NQ	NQ	NQ	NQ	14.8	13.5	12.2	11.3
60,000	NQ	NQ	NQ	NQ	16.9	15.3	13.9	12.8

2.0 Functional and Operating Limits

Table 2.1-6
Fuel Cooling Table W21-1-B

APPLICABILITY:

Canister:	FuelSolutions™ W21-M and W21-T Canisters
Loading Specification:	W21-1 (Table 2.1-1)
Description:	Up to 21 fuel assemblies
SNF Assemblies:	Valid for the SNF assemblies listed in Table 2.1-3
Cobalt Range:	# 50 g in active fuel region (high-cobalt)

QUALIFICATION BASES:

Storage Cask Dose Rate	# 50 mrem/hr
Canister Heat Load	# 22.0 kW/Canister, and # 0.161 kW/inch-Canister

Maximum Burnup (MWD/MTU)[1,3]	Required Minimum Cooling Time (yr.)[1,2]							
	Minimum Initial Enrichment (w/o ^{235}U)							
	1.5	2.0	2.5	3.0	3.5	4.0	4.5	5.0
15,000	4.2	4.0	3.9	3.8	3.8	3.8	3.7	3.7
20,000	4.9	4.6	4.5	4.4	4.3	4.2	4.2	4.1
25,000	5.6	5.3	5.1	5.0	4.9	4.8	4.7	4.7
30,000	6.2	6.0	5.5	5.4	5.3	5.2	5.1	5.0
32,000	6.6	6.4	5.7	5.6	5.5	5.4	5.3	5.2
34,000	7.0	6.8	6.0	5.8	5.7	5.6	5.5	5.4
36,000	7.2	7.0	6.2	6.1	5.9	5.8	5.7	5.6
38,000	7.6	7.4	6.6	6.4	6.2	6.0	5.9	5.8
40,000	7.7	7.6	7.4	6.4	6.2	6.0	5.9	5.8
42,000	8.2	8.0	7.9	6.8	6.6	6.5	6.3	6.1
44,000	9.1	8.4	8.2	7.1	6.9	6.8	6.6	6.4
46,000	NQ [4]	9.3	8.3	7.7	7.3	6.9	6.7	6.5
48,000	NQ	10.6	9.5	8.6	7.9	7.5	7.2	6.8
50,000	NQ	NQ	10.7	9.7	8.9	8.2	7.7	7.4
52,000	NQ	NQ	12.3	11.0	9.9	9.2	8.6	8.0
54,000	NQ	NQ	NQ	12.7	11.4	10.4	9.6	9.0
56,000	NQ	NQ	NQ	14.5	13.1	11.8	10.8	10.0
58,000	NQ	NQ	NQ	NQ	14.8	13.5	12.2	11.3
60,000	NQ	NQ	NQ	NQ	16.9	15.3	13.9	12.8

2.0 Functional and Operating Limits

Table 2.1-7
Fuel Cooling Table W21-2-A

APPLICABILITY:

Canister:	FuelSolutions™ W21-M and W21-T Canisters
Loading Specification:	W21-2 (Table 2.1-2)
Description:	Up to 20 fuel assemblies
SNF Assemblies:	Valid for the SNF assemblies listed in Table 2.1-4
Cobalt Range:	# 11 g in active fuel region (low-cobalt)

QUALIFICATION BASES:

Storage Cask Dose Rate	# 50 mrem/hr
Canister Heat Load	# 22.0 kW/Canister, and # 0.161 kW/inch-Canister

Maximum Burnup (MWD/MTU)[1,3]	Required Minimum Cooling Time (yr.)[1,2]							
	Minimum Initial Enrichment (w/o ^{235}U)							
	1.5	2.0	2.5	3.0	3.5	4.0	4.5	5.0
15,000	3.3	3.3	3.2	3.2	3.2	3.1	3.1	3.1
20,000	3.7	3.6	3.5	3.5	3.4	3.4	3.4	3.4
25,000	4.0	3.9	3.8	3.7	3.7	3.6	3.6	3.6
30,000	4.9	4.6	4.4	4.2	4.1	4.0	3.9	3.8
32,000	5.2	5.0	4.8	4.6	4.4	4.2	4.1	4.0
34,000	5.5	5.3	5.0	4.8	4.6	4.5	4.3	4.2
36,000	5.9	5.6	5.4	5.1	5.0	4.8	4.6	4.5
38,000	6.4	5.9	5.7	5.5	5.3	5.1	4.9	4.8
40,000	7.1	6.5	6.0	5.7	5.5	5.4	5.2	5.0
42,000	8.0	7.4	6.9	6.4	6.0	5.8	5.6	5.5
44,000	9.1	8.1	7.5	7.0	6.6	6.2	5.9	5.8
46,000	NQ [4]	9.3	8.3	7.7	7.3	6.9	6.5	6.2
48,000	NQ	10.6	9.5	8.6	7.9	7.5	7.2	6.8
50,000	NQ	NQ	10.7	9.7	8.9	8.2	7.7	7.4
52,000	NQ	NQ	12.3	11.0	9.9	9.2	8.6	8.0
54,000	NQ	NQ	NQ	12.7	11.4	10.4	9.6	9.0
56,000	NQ	NQ	NQ	14.5	13.1	11.8	10.8	10.0
58,000	NQ	NQ	NQ	NQ	14.8	13.5	12.2	11.3
60,000	NQ	NQ	NQ	NQ	16.9	15.3	13.9	12.8

2.0 Functional and Operating Limits

Table 2.1-8
Fuel Cooling Table W21-2-B

APPLICABILITY:

Canister:	FuelSolutions™ W21-M and W21-T Canisters
Loading Specification:	W21-2 (Table 2.1-2)
Description:	Up to 20 fuel assemblies
SNF Assemblies:	Valid for the SNF assemblies listed in Table 2.1-4
Cobalt Range:	# 50 g in active fuel region (high-cobalt)

QUALIFICATION BASES:

Storage Cask Dose Rate	# 50 mrem/hr
Canister Heat Load	# 22.0 kW/Canister, and # 0.161 kW/inch-Canister

Maximum Burnup (MWD/MTU)[1,3]	Required Minimum Cooling Time (yr.)[1,2]							
	Minimum Initial Enrichment (w/o ^{235}U)							
	1.5	2.0	2.5	3.0	3.5	4.0	4.5	5.0
15,000	4.2	4.0	3.9	3.8	3.8	3.8	3.7	3.7
20,000	4.9	4.6	4.5	4.4	4.3	4.2	4.2	4.1
25,000	5.6	5.3	5.1	5.0	4.9	4.8	4.7	4.7
30,000	6.2	6.0	5.5	5.4	5.3	5.2	5.1	5.0
32,000	6.6	6.4	5.7	5.6	5.5	5.4	5.3	5.2
34,000	7.0	6.8	6.0	5.8	5.7	5.6	5.5	5.4
36,000	7.2	7.0	6.2	6.1	5.9	5.8	5.7	5.6
38,000	7.6	7.4	6.6	6.4	6.2	6.0	5.9	5.8
40,000	7.7	7.6	7.4	6.4	6.2	6.0	5.9	5.8
42,000	8.2	8.0	7.9	6.8	6.6	6.5	6.3	6.1
44,000	9.1	8.4	8.2	7.1	6.9	6.8	6.6	6.4
46,000	NQ [4]	9.3	8.3	7.7	7.3	6.9	6.7	6.5
48,000	NQ	10.6	9.5	8.6	7.9	7.5	7.2	6.8
50,000	NQ	NQ	10.7	9.7	8.9	8.2	7.7	7.4
52,000	NQ	NQ	12.3	11.0	9.9	9.2	8.6	8.0
54,000	NQ	NQ	NQ	12.7	11.4	10.4	9.6	9.0
56,000	NQ	NQ	NQ	14.5	13.1	11.8	10.8	10.0
58,000	NQ	NQ	NQ	NQ	14.8	13.5	12.2	11.3
60,000	NQ	NQ	NQ	NQ	16.9	15.3	13.9	12.8

2.0 Functional and Operating Limits

Table 2.1-5 through Table 2.1-8 Notes:

(1) Rounding: round up to next highest burnup, round down to next lowest enrichment. Alternatively, more precise cooling times may be obtained by linear interpolation of the cooling time between listed burnup level, enrichment levels, or both.

(2) Enrichments less than 1.5% or greater than the criticality limit presented in Section 6.1 of the FuelSolutions™ W21 Canister Storage FSAR are not qualified.

(3) Burnups greater than 60,000 MWD/MTU are not qualified for storage. Fuel less than 15,000 MWD/MTU is acceptable at or beyond the minimum cooling time indicated for 15,000 MWD/MTU.

(4) Not qualified for storage.

3.0 LIMITING CONDITION FOR OPERATION (LCO) APPLICABILITY

LCO 3.0.1	LCOs shall be met during specified conditions in the Applicability, except as provided in LCO 3.0.2.
LCO 3.0.2	Upon discovery of a failure to meet an LCO, the Required Actions of the associated Conditions shall be met, except as provided in LCO 3.0.5. If the LCO is met or is no longer applicable prior to expiration of the specified Completion Time(s), completion of the Required Action(s) is not required, unless otherwise stated.
LCO 3.0.3	Not applicable to an SFSS.
LCO 3.0.4	When an LCO is not met, entry into a specified condition in the Applicability shall not be made except when the associated ACTIONS to be entered permit continued operation in the specified condition in the Applicability for an unlimited period of time. This Specification shall not prevent changes in specified conditions in the Applicability that are required to comply with ACTIONS or that are related to the unloading of a CANISTER.
LCO 3.0.5	Equipment removed from service or not in service in compliance with ACTIONS may be returned to service under administrative control solely to perform testing required to demonstrate it meets the LCO or that other equipment meets the LCO. This is an exception to LCO 3.0.2 for the system returned to service under administrative control to perform the testing.
LCO 3.0.6	Not applicable to an SFSS.
LCO 3.0.7	Not applicable to an SFSS.

3.0 SURVEILLANCE REQUIREMENT (SR) APPLICABILITY

SR 3.0.1	SRs shall be met during the specified conditions in the Applicability for individual LCOs, unless otherwise stated in the SR. Failure to meet a Surveillance, whether such failure is experienced during the performance of the Surveillance or between performances of the Surveillance, shall be failure to meet the LCO. Failure to perform a Surveillance within the specified Frequency shall be failure to meet the LCO except as provided in SR 3.0.3. Surveillances do not have to be performed on equipment or variables outside specified limits.
SR 3.0.2	The specified Frequency for each SR is met if the Surveillance is performed within 1.25 times the interval specified in the Frequency, as measured from the previous performance or a measured from the time a specified condition of the Frequency is met. For Frequencies specified as “once,” the above interval extension does not apply. If a Completion Time requires periodic performance on a “once per…” basis, the above Frequency extension applies to each performance after the initial performance. Exceptions to this Specification are stated in the individual Specifications.
SR 3.0.3	If it is discovered that a Surveillance was not performed within its specified Frequency, then compliance with the requirement to declare the LCO not met may be delayed, from the time of discovery, up to 24 hours or up to the limit of the specified Frequency, whichever is less. This delay period is permitted to allow performance of the Surveillance. If the Surveillance is not performed within the delay period, the LCO must immediately be declared not met, and the applicable Condition(s) must be entered. When the Surveillance is performed within the delay period and the Surveillance is not met, the LCO must immediately be declared not met, and the applicable Condition(s) must be entered.
SR 3.0.4	Entry into a specified condition in the Applicability of an LCO shall not be made unless the LCO’s Surveillances have been met within their specified Frequency. This provision shall not prevent entry into specified conditions in the Applicability that are required to comply with ACTIONS or that are related to the unloading of a CANISTER.

3.1 CANISTER INTEGRITY

3.1.1 W21 Canister Helium Backfill Density

LCO 3.1.1	The CANISTER helium backfill density shall be in the range of 0.0368 g-moles/liter to 0.0395 g-moles/liter (i.e. in the range of 0.0378 ± 0.0010 g-moles/liter to 0.0385 ± 0.0010 g-moles/liter).
APPLICABILITY:	During LOADING OPERATIONS.

ACTIONS

NOTE

Separate Condition entry is allowed for each CANISTER.

CONDITION	REQUIRED ACTION	COMPLETION TIME
A. CANISTER helium backfill quantity limit is not met.	A.1 Establish CANISTER helium backfill quantity within limit.	48 hours
B. Required Action and associated Completion Time are not met.	B.1 Remove all fuel assemblies from CANISTER.	30 days

SURVEILLANCE REQUIREMENTS

NOTE

The helium used for backfill shall have a minimum purity of 99.995%.

SURVEILLANCE		FREQUENCY
SR 3.1.1.1	Verify CANISTER helium backfill quantity is within limit.	Within 24 hours after verifying CANISTER cavity vacuum drying pressure is within limit.

3.1 CANISTER INTEGRITY

3.1.2 Canister Vacuum Drying Pressure

See the Storage System Technical Specification for the applicable LCO.

3.1 CANISTER INTEGRITY

3.1.3 Canister Leak Rate

See the Storage System Technical Specification for the applicable LCO.

3.1 CANISTER INTEGRITY

3.1.4 Hydraulic Ram Force During Horizontal Canister Transfer

See the Storage System Technical Specification for the applicable LCO.

3.1 CANISTER INTEGRITY

3.1.5 W21 Canister Vertical Time Limit in Transfer Cask

LCO 3.1.5	For vertical TRANSFER OPERATIONS, the CANISTER transfer out of the TRANSFER CASK shall be completed within 18 hours after draining the annulus water from the TRANSFER CASK. For horizontal TRANSFER OPERATIONS, the movement of the TRANSFER CASK to the horizontal position on the transfer trailer shall be completed within 18 hours after draining the annulus water from the TRANSFER CASK.
APPLICABILITY:	During TRANSFER OPERATIONS.

ACTIONS

NOTE

Separate Condition entry is allowed for each CANISTER.

CONDITION	REQUIRED ACTION	COMPLETION TIME
A. CANISTER time limit in drained annulus TRANSFER CASK is not met.	A.1 Fill annulus with water.	8 hours.
	AND	
	A.2 Maintain filled annulus.	24 hours.

SURVEILLANCE REQUIREMENTS

SURVEILLANCE		FREQUENCY
SR 3.1.5.1	Verify TRANSFER CASK operations with CANISTER in vertical orientation and annulus drained are completed within time limit.	Within 18 hours after completion of TRANSFER CASK/ CANISTER annulus draining.

3.2 CANISTER RADIATION PROTECTION

3.2.1 Canister Surface Contamination

See the Storage System Technical Specification for the applicable LCO.

(Deleted) |
3.3.1

3.3 STORAGE CASK INTEGRITY

3.3.1 (Deleted) |

3.3 STORAGE CASK INTEGRITY

3.3.2 Storage Cask Periodic Monitoring

LCO 3.3.2 The inlet and outlet vent screens of a STORAGE CASK with a W21 CANISTER containing fuel assemblies shall be visibly free of blockage or damage.

OR

The temperature of a STORAGE CASK with a W21 CANISTER containing fuel assemblies, as indicated by the liner thermocouple, shall meet the temperature limit established by the *storage cask periodic monitoring program*.

APPLICABILITY: During STORAGE OPERATIONS.

ACTIONS

NOTE

Separate Condition entry is allowed for each STORAGE CASK.

CONDITION	REQUIRED ACTION	COMPLETION TIME
A. LCO 3.3.2 not met.	A.1 If vent blockage is identified during visual inspection of vent screens, clear vent screens of blockage.	24 hours
	AND	
	A.2.1 If vent damage is identified during visual inspection of vent screens, remove the damaged vent screen(s).	24 hours
	AND	
	A.2.2.1 If vent damage significantly reduces flow area but does not increase access to vent channels, repair or replace the damaged vent screen(s).	24 hours
	OR (continued)	

3.3.2 Storage Cask Periodic Monitoring

CONDITION	REQUIRED ACTION	COMPLETION TIME
	A.2.2.2 If vent damage increases access to vent channel, perform a visual inspection of the vent channel, clear any debris or obstructions found, and repair or replace the damaged vent screen(s).	24 hours
	AND	
	A.2.3 Attach the repaired or replacement vent screen(s) to the STORAGE CASK.	24 hours
	OR	
	A.3.1 If the liner thermocouple temperature exceeds the allowable temperature limit, check the STORAGE CASK inlet and outlet vent screens for blockage or damage.	24 hours
	AND	
	A.3.2.1 If vents are blocked or damaged, perform ACTIONS A.1 and A.2, as required.	In accordance with ACTIONS A.1 and A.2.
	OR	
	A.3.2.2.1 If vents are not blocked or damaged, check the liner thermocouple and related instrumentation to assure it is functioning properly.	24 hours
	AND	
	A.3.2.2.2 Repair or replace thermocouple and related instrumentation as necessary.	48 hours
	AND (continued)	
	A.3.3 Verify STORAGE CASK	72 hours

3.3.2 Storage Cask Periodic Monitoring

CONDITION	REQUIRED ACTION	COMPLETION TIME
	temperature returns to within the the local concrete long-term temperature limit of 200EF. AND	
	A.3.4 Verify STORAGE CASK temperature returns to within the applicable temperature limit from the *storage cask periodic monitoring program*.	192 hours
B. Required Actions and associated Completion Times are not met.	B.1 Initiate actions to cool the cask to within the limit. AND	96 hours
	B.2.1 Visually inspect the interior of the STORAGE CASK for ventilation obstructions using remote inspection tools or by temporarily removing the STORAGE CASK top ocver. AND	96 hours
	B.2.2.1 Remove ventilation obstructions. AND	96 hours
	B.2.2.2 Verify STORAGE CASK temperature returns to within local concrete long-term temperature limit of 200EF. AND	96 hours
	B.2.2.3 Verify STORAGE CASK temperature returns to within the applicable limit from the *storage cask periodic monitoring program*. OR (continued)	270 days

3.3.2 Storage Cask Periodic Monitoring

CONDITION	REQUIRED ACTION	COMPLETION TIME
	B.2.3.1 Return CANISTER to TRANSFER CASK.	30 days
	AND	
	B.3.3.2 Return CANISTER to repaired or replacement STORAGE CASK.	270 days

SURVEILLANCE REQUIREMENTS

SURVEILLANCE		FREQUENCY
SR 3.3.2.1	Visually inspect all four inlet screens and all four outlet screens for each loaded STORAGE CASK. OR Verify that the STORAGE CASK temperatures are within limit NOTE STORAGE CASK temperatures are expected to vary slightly between successive measurements due to changes in the ambient temperature. This is acceptable as long as the temperatures remain within the specified limit.	Based on *storage cask periodic monitoring program*.

3.3 STORAGE CASK INTEGRITY

3.3.3 Storage Cask Temperatures During Horizontal Transfer

LCO 3.3.3	The measured temperature of a STORAGE CASK with a W21 CANISTER containing fuel assemblies, as indicated by the liner thermocouple, shall not exceed 190EF (88EC).
APPLICABILITY:	During TRANSFER OPERATIONS.

ACTIONS

NOTE

Separate Condition entry is allowed for each STORAGE CASK.

CONDITION	REQUIRED ACTION	COMPLETION TIME
A. STORAGE CASK concrete temperature limit is not met.	A.1 Transfer the CANISTER into the TRANSFER CASK	24 hours
B. Required Action A.1 and associated Completion Times are not met.	B.1 Inspect the STORAGE CASK for damage.	5 days
	AND	
	B.2.1 If no damage, transfer CANISTER to STORAGE CASK.	7 days
	OR	
	B.2.2 If damaged, transfer CANISTER to new STORAGE CASK.	21 days
C. Required Actions B.1 and B.2-1, or B.1 and B.2.2, and associated Completion Time are not met.	C.1 Return CANISTER to TRANSFER CASK.	30 days
	AND	
	C.2 Return CANISTER to repaired or replacement STORAGE CASK.	270 days

SURVEILLANCE REQUIREMENTS

SURVEILLANCE		FREQUENCY
SR 3.3.3.1	After the STORAGE CASK is downended to the horizontal orientation with a CANISTER loaded with SNF inside, monitor and record STORAGE CASK concrete temperature as indicated by the STORAGE CASK liner thermocouple.	30 minutes

3.4 TRANSFER CASK INTEGRITY

3.4.1 Transfer Cask Structural Shell Temperature

See the Storage System Technical Specification for the applicable LCO.

3.5 TRANSFER CASK RADIATION PROTECTION

3.5.1 Transfer Cask Surface Contamination

See the Storage System Technical Specification for the applicable LCO.

4.0 DESIGN FEATURES

The specifications in this section include the design characteristics of special importance to each of the physical barriers and the maintenance of safety margins in the storage system component design. The principal objective of this category is to describe the design envelope which might constrain any physical changes to essential equipment. Included in this category are the site environmental parameters which provide the bases for design, but are not inherently suited for description as LCOs.

4.1 Storage System

4.1.1 Storage Cask

4.1.1.1 Structural Performance

See the Storage System Technical Specification Section 4.1.1.1 for discussion of STORAGE CASK structural performance features.

4.1.1.2 Codes and Standards

See the Storage System Technical Specification Section 4.1.1.2 for discussion of codes and standards applicable to the STORAGE CASK.

4.1.1.3 Fabrication Exceptions to Codes, Standards, and Criteria

See the Storage System Technical Specification Section 4.1.1.3 for discussion of exceptions to codes, standards, and criteria.

4.1.2 Transfer Cask

4.1.2.1 Structural Performance

See the Storage System Technical Specification Section 4.1.2.1 for discussion of TRANSFER CASK structural performance features.

4.1.2.2 Codes and Standards

See the Storage System Technical Specification Section 4.1.2.2 for discussion of codes and standards applicable to the TRANSFER CASK.

4.1.2.3 Fabrication Exceptions to Codes, Standards, and Criteria

See the Storage System Technical Specification Section 4.1.2.3 for discussion of exceptions to codes, standards, and criteria.

4.1.3 Canister

4.1.3.1 Criticality

The design of the W21 CANISTER, including spatial constraints on adjacent assemblies (minimum basket cell opening of 8.90 inches square) and the boron content of the basket neutron absorber material (minimum areal density equal to 20 mg $^{10}B/cm^2$) shall assure that fuel assemblies are maintained in a subcritical condition with a k_{eff} less than 0.95 under all conditions of operation.

4.0 Design Features

4.1.3.2 Structural Performance

The CANISTER has been evaluated for a side drop resulting in a lateral gravitational (*g*) loading of 60 *g* and an end drop resulting in an axial gravitational loading of 50 *g*.

The maximum weight of a loaded, dried, and sealed W21 CANISTER is 85,000 pounds. The maximum CANISTER weight includes fuel assembly spacers, where applicable.

The W21 CANISTER thermal rating of 25.1 kW is determined by the minimum heat load qualification in the STORAGE and TRANSFER CASKS.

4.1.3.3 Codes and Standards

The FuelSolutions™ W21 CANISTER shell structural components are designed in accordance with Subsection NB of the ASME Code, and the basket structural components are designed in accordance with Subsection NG of the ASME Code. Exceptions to the code are listed in Table 4.1-1.

4.1.3.4 Fabrication Exceptions to Codes, Standards, and Criteria

Proposed alternatives to Subsections NB and NG of the ASME Code, including exceptions allowed by Section 4.1.3.3, may be used when authorized by the Director of the Office of Nuclear Material Safety and Safeguards or Designee. The applicant should demonstrate that:

1. The proposed alternatives would provide an acceptable level of quality and safety, or
2. Compliance with the specified requirements of ASME Code, Section III, would result in hardship or unusual difficulty without a compensating increase in the level of quality and safety.

Requests for exception in accordance with this section should be submitted in accordance with 10CFR72.4.

4.2 Storage Pad

Constraints on the storage pad are discussed in Section 4.2 of the Storage System Technical Specification.

4.3 Site Specific Parameters and Analyses

See the Storage System Technical Specification Section 4.3 for discussion of site specific parameters and analyses.

Table 4.1-1
FuelSolutions™ W21 Canister ASME Code Requirements Compliance Summary (16 pages)

Item	ASME Code Requirement	Issue	Alternative Compliance Basis
Section III, Subsection NCA (applicable to both Canister and Basket):			
1	**General for Subsection NCA**	1. The terms "Certificate Holder" and "Owner" used throughout this subsection are not applicable for a 10CFR72 system. 2. The Division 2 (concrete) requirement provided throughout this subsection are not applicable for a 10CFR72 system.	1. BNG Fuel Solutions (BFS) bears the responsibilities associated with a "Certificate Holder" or "Owner" relative to the FuelSolutions™ SFMS. 2. This compliance summary table only addresses FuelSolutions™ Canisters, which do not contain any concrete.
2	**NCA-1140, "Use of Code Editions, Addenda, and Cases:"** "(a)(1) Under the rules of this Section, the Owner or his designees shall establish the Code Edition and Addenda to be included in the Design Specifications…"	The FuelSolutions™ SFMS documentation does not include an ASME Code Design Specification.	The requirements and criteria typically contained in an ASME Code Design Specification are contained in this FSAR.

Table 4.1-1
FuelSolutions™ W21 Canister ASME Code Requirements Compliance Summary (16 pages)

Item	ASME Code Requirement	Issue	Alternative Compliance Basis
3	**NCA-1210, "Components:"** "Each component of a nuclear power plant shall require a Design Specification (NCA-3250), Design Report (NCA-3350, NCA-3550), and other design documents specified in NCA-3800. Data Reports and stamping shall be as required in NCA-8000."	The FuelSolutions™ SFMS documentation does not contain the following ASME Code documents: 1. Design Specification 2. Design Report 3. Owner's Certificate of Authorization 4. Authorized Inspection Agency Written Agreement 5. Owner's Data Report 6. Overpressure Protection Report.	1. See Item 2. 2. The information typically reported in an ASME Code Design Report is contained in this FSAR 3. An Owner's Certificate of Authorization, a written agreement with an Authorized Inspection Agency, an Owner's Data Report, and an Overpressure Protection Report are not typically provided for components licensed under 10CFR72.
4	**NCA-1220, "Materials"**	Not all non-pressure retaining materials specified in this FuelSolutions™ Canister Storage FSAR are listed as ASME Section III materials.	FuelSolutions™ Canisters are purchased, identified, controlled, and manufactured using a graded quality approach in accordance with the NRC-approved BFS QA Program based on NQA-1, NRC Regulatory Guide 7.10, and NUREG/CR-6407 criteria.

Table 4.1-1
FuelSolutions™ W21 Canister ASME Code Requirements Compliance Summary (16 pages)

Item	ASME Code Requirement	Issue	Alternative Compliance Basis
5	**NCA-1281, "Activities and Requirements:"** "…Data Reports and stamping shall be as required in NCA-8000."	See Item 19.	See Item 19.
6	**NCA-2000, "Classification of Components"**	The classification of components is usually provided in a Design Specification.	See Item 2.
7	**NCA-2142, "Establishment of Design, Service, and Test Loadings and Limits:"** "In the Design Specification, the Owner or his designee shall identify the loadings and combinations of loadings and establish the appropriate Design, Service, and Test Limits for each component or support…"	See Item 2.	See Item 2.
8	**NCA-3100, "General"**	ASME Code accreditation does not apply.	See Item 1.

Table 4.1-1
FuelSolutions™ W21 Canister ASME Code Requirements Compliance Summary (16 pages)

Item	ASME Code Requirement	Issue	Alternative Compliance Basis
9	**NCA-3200, "Owner's Responsibilities"**	An Owner's responsibilities under the ASME Code do not apply.	An Owner's Certificate of Authorization, a Design Specification, a Design Report, an Overpressure Protection Report, and an Owner's Data Report are not typically provided for components licensed under 10CFR72.
10	**NCA-3300, "Responsibilities of a Designer - Division 2"**	See Item 1.	See Item 1.
11	**NCA-3400, "Responsibilities of an N Certificate Holder - Division 2"**	See Item 1.	See Item 1.
12	**NCA-3500, "Responsibilities of an N Certificate Holder - Division 1"**	See Item 1.	See Item 1. Design and fabrication requirements are provided in this FSAR and related procurement/fabrication drawings and specifications.
13	**NCA-3600, "Responsibilities of an NPT Certificate Holder"**	See Item 1.	See Item 12.
14	**NCA-3700, "Responsibilities of an NA Certificate Holder"**	See Item 1.	See Item 12.

Table 4.1-1
FuelSolutions™ W21 Canister ASME Code Requirements Compliance Summary (16 pages)

Item	ASME Code Requirement	Issue	Alternative Compliance Basis
15	**NCA-3800, "Metallic Material Organization's Quality System Program"**	Materials for a FuelSolutions™ canister may be purchased from suppliers that are not certified per the requirements of NCA-3800.	Material suppliers are qualified per NCA-3800 or the NRC-approved BFS QA Program based on the requirements of NQA-1, NRC Regulatory Guide 7.10, and NUREG/CR-6407 criteria.
16	**NCA-3900, "Nonmetallic Material Manufacturer's and Constituent Suppliers Quality System Programs"**	See Item 1.	See Item 1.
17	**NCA-4000, "Quality Assurance"**	These QA requirements do not apply.	See Item 4.
18	**NCA-5000, "Authorized Inspection"**	The manufacturing or operation of the FuelSolutions™ SFMS does not use an Authorized Inspection Agency.	An Authorized Inspection Agency is not typically used in the manufacturing or operation of components licensed under 10CFR72.

Table 4.1-1
FuelSolutions™ W21 Canister ASME Code Requirements Compliance Summary (16 pages)

Item	ASME Code Requirement	Issue	Alternative Compliance Basis
19	**NCA-8000, "Certificates of Authorization, Nameplates, Code Symbol Stamping, and Data Reports"**	The FuelSolutions™ SFMS does not use an ASME Code Certificate of Authorization, a Code Symbol Stamp, or a Data Report.	An ASME Code Certificate of Authorization, a Code Symbol Stamp, or a Data Report are not typically required for components licensed under 10CFR72. Nameplate information is provided on each FuelSolutions™ canister.
Section III, Subsection NB (applicable to Canister):			
20	**NB-1130, "Boundary of Components:"** "The Design Specification shall define the boundary of a component to which piping or another component is attached."	See Item 6.	See Item 6.
21	**NB-1132.2, "Jurisdictional Boundary:"** "The jurisdictional boundary between a pressure-retaining component and an attachment defined in the Design Specification shall not be any closer to the pressure-retaining portion of the component than as defined in (a) through (g) below…"	See Item 6.	See Item 6.

Table 4.1-1
FuelSolutions™ W21 Canister ASME Code Requirements Compliance Summary (16 pages)

Item	ASME Code Requirement	Issue	Alternative Compliance Basis
22	**NB-2160, "Deterioration of Material In Service:"** "It is the responsibility of the Owner to select material suitable for the conditions stated in the Design Specifications (NCA-3250), with specific attention being given to the effects of service conditions upon the properties of the material. …Any special requirement shall be specified in the Design Specifications (NCA-3252 and NB-3124)…"	See Item 2.	See Item 2.
23	**NB-2610, "Documentation and Maintenance of Quality System Programs:"** "(a) Except as provided in (b) below, Material Manufacturers and Material Suppliers shall have a Quality System Program or an Identification and Verification Program, as applicable, which meets the requirements of NCA-3800…"	See Item 15.	See Item 15.

Table 4.1-1
FuelSolutions™ W21 Canister ASME Code Requirements Compliance Summary (16 pages)

Item	ASME Code Requirement	Issue	Alternative Compliance Basis
24	**NB-3113, "Service Conditions:"** "Each service condition to which the components may be subjected shall be classified in accordance with NCA-2142 and Service Limits (NCA-2142.4(b)) designated in the Design Specifications in such detail as will provide a complete basis for design, construction, and inspection in accordance with this Article…"	See Item 2.	See Item 2.
25	**NB-3134, "Leak Tightness:"** "Where a system leak tightness greater than that required or demonstrated by a hydrostatic test is required, the leak tightness requirements for each component shall be set forth in the Design Specifications."	See Item 2.	See Item 2.
26	**NB-3220, "Stress Limits for Other Than Bolts"**	This section makes a number of references to an ASME Code Design Specification. See Item 2.	See Item 2.

Table 4.1-1
FuelSolutions™ W21 Canister ASME Code Requirements Compliance Summary (16 pages)

Item	ASME Code Requirement	Issue	Alternative Compliance Basis
27	**NB-4121, "Means of Certification:"** "The Certificate Holder for an item shall certify, by application of the appropriate Code Symbol and completion of the appropriate Data Report in accordance with NCA-8000, that materials used comply with the requirements of NB-2000 and that the fabrication or installation complies with the requirements of this Article."	The FuelSolutions™ SFMS does not use an ASME Code Symbol Stamp or a Data Report.	An ASME Code Symbol Stamp or Data Report are not typically required for components licensed under 10CFR72. Also see Item 15.

Table 4.1-1
FuelSolutions™ W21 Canister ASME Code Requirements Compliance Summary (16 pages)

Item	ASME Code Requirement	Issue	Alternative Compliance Basis
28	**NB-4243, "Category C Weld Joints in Vessels and Similar Weld Joints in Other Components:"** "Category C weld joints in vessels and similar weld joints in other components shall be full penetration joints…Either a butt welded joint or a full penetration corner joint as shown in Fig. NB-4243-1 shall be used."	The FuelSolutions™ canister top end closure employs the following cover-to-shell weld types: 1. Top inner cover - a single-sided partial penetration weld. 2. Top outer cover - a single-sided partial penetration weld.	The FuelSolutions™ canister top end closure employs multi-pass, redundant welds subjected to multi-level liquid penetrant examinations and a combined pneumatic pressure and helium leak rate test at a hydrostatic test pressure to assure structural integrity and leak tightness. The design of the inner closure weld incorporates a stress-reduction factor of 0.9 to account for use of multi-pass PT examination and helium leak testing. The design of the outer closure weld complies with ISG-4. The examination of the inner and outer closure plate welds complies with ISG-4.

Table 4.1-1
FuelSolutions™ W21 Canister ASME Code Requirements Compliance Summary (16 pages)

Item	ASME Code Requirement	Issue	Alternative Compliance Basis
29	**NB-5231, "General Requirements:"** "(a) Category C full penetration butt welded joints in vessels and similar welded joints in other components shall be examined by the radiographic and either liquid penetrant or magnetic particle method."	The FuelSolutions™ canister top end closures are not radiographically examined.	See Item 28.

Table 4.1-1
FuelSolutions™ W21 Canister ASME Code Requirements Compliance Summary (16 pages)

Item	ASME Code Requirement	Issue	Alternative Compliance Basis
30	**NB-6112, "Pneumatic Testing:"** "A pneumatic test in accordance with NB-6300 may be substituted for the hydrostatic test when permitted by NB-6112.1(a)." **NB-6112.1, "Pneumatic Test Limitations:"** "(a) A pneumatic test may be used in lieu of a hydrostatic test only when any of the following conditions exists: 1. when components, appurtenances, or systems are so designed or supported that they cannot safely be filled with liquid; 2. when components, appurtenances, or systems which are not readily dried are to be used in services where traces of the testing medium cannot be tolerated. (b) A pneumatic test at a pressure not to exceed 25% of the Design Pressure may be applied, prior to either a hydrostatic or a pneumatic test, as a means of locating leaks."	The FuelSolutions™ Canisters employ a combined pneumatic pressure and helium leak rate test at a hydrostatic test pressure to assure structural integrity and leak tightness.	Because a dry SNF assembly storage canister is a 10CFR72 licensed component requiring a helium leak rate test, the combination of this leak rate test with a pneumatic pressure test at a hydrostatic test pressure is operationally efficient and consistent with ALARA principles, while still being very conservative due to the molecular size of the testing medium and the use of helium leak rate vs. visual examination acceptance criteria.

Table 4.1-1
FuelSolutions™ W21 Canister ASME Code Requirements Compliance Summary (16 pages)

Item	ASME Code Requirement	Issue	Alternative Compliance Basis
31	**NB-6200, "Hydrostatic Tests"**	See Item 30.	See Item 30.
32	**NB-7000, "Overpressure Protection"**	A FuelSolutions™ canister is not designed to include an overpressure protection device.	By their very nature, Canisters and casks designed to dry store SNF assemblies are licensed without any type of overpressure protection device or vent path of any kind.
33	**NB-8000, "Nameplates, Stamping, and Reports"**	The FuelSolutions™ SFMS does not use an ASME Code Symbol Stamp or a Data Report.	An ASME Code Symbol Stamp or a Data Report are not typically required for components licensed under 10CFR72. Nameplate information is provided on each FuelSolutions™ canister.
Section III, Subsection NG (applicable to Basket):			
34	**NG-2160, "Deterioration of Material In Service:"** "It is the responsibility of the Owner to select material suitable for the conditions stated in the Design Specifications (NCA-3250), with specific attention being given to the effects of service conditions upon the properties of the material."	See Item 2.	See Item 2.

Table 4.1-1
FuelSolutions™ W21 Canister ASME Code Requirements Compliance Summary (16 pages)

Item	ASME Code Requirement	Issue	Alternative Compliance Basis
35	**NG-2330, "Test Requirements and Acceptance Standards"**	FuelSolutions™ canister basket material is not impact tested to the requirements of NG-2330.	Canister basket is licensed for storage and transportation, and therefore materials are impact tested in accordance with NRC criteria provided in Regulatory Guide 7.11 and NUREG/CR-1815 for Category II materials.
36	**NG-2610, "Documentation and Maintenance of Quality System Programs:"** "(a) Except as provided in (b) below, Material Manufacturers and Material Suppliers shall have a Quality System Program or an Identification and Verification Program, as applicable, which meets the requirements of NCA-3800…"	See Item 15.	See Item 15.

Table 4.1-1
FuelSolutions™ W21 Canister ASME Code Requirements Compliance Summary (16 pages)

Item	ASME Code Requirement	Issue	Alternative Compliance Basis
37	**NG-3113, "Service Loadings:"** "Each loading to which the structure may be subjected shall be classified in accordance with NCA-2142 and Service Limits (NCA-2142.4(b)) designated in the Design Specifications in such detail as will provide a complete basis for design, construction, and inspection in accordance with this Article…"	See Item 2.	See Item 2.
38	**NG-3220, "Stress Limits for Other Than Threaded Structural Fasteners"**	This section makes a number of references to an ASME Code Design Specification. See Item 2.	See Item 2.
39	**NG-4121, "Means of Certification:"** "The Certificate Holder for an item shall certify, by application of the appropriate Code Symbol and completion of the appropriate Data Report in accordance with NCA-8000, that materials used comply with the requirements of NG-2000 and that the fabrication or installation complies with the requirements of this Article."	The FuelSolutions™ SFMS does not use an ASME Code Symbol Stamp or a Data Report.	An ASME Code Symbol Stamp or Data Report are not typically required for components licensed under 10CFR72. Also see Item 15.

Table 4.1-1
FuelSolutions™ W21 Canister ASME Code Requirements Compliance Summary (16 pages)

Item	ASME Code Requirement	Issue	Alternative Compliance Basis
40	**NG-8000, "Nameplates, Stamping, and Reports"**	The FuelSolutions™ SFMS does not use an ASME Code Symbol Stamp or a Data Report.	An ASME Code Symbol Stamp or a Data Report are not typically required for components licensed under 10CFR72. Nameplate information is provided on each FuelSolutions™ canister.

5.0 ADMINISTRATIVE CONTROLS

5.1 Training Modules

See the Storage System Technical Specification for the applicable information.

5.2 Preoperational Testing and Training Exercises

See the Storage System Technical Specification for the applicable information.

5.3 Programs

5.3.1-5.3.5

See the Storage System Technical Specification for the applicable information.

5.3.6 Vacuum Drying Program

The FuelSolutions™ W21 CANISTER has been evaluated for allowable fuel cladding temperature during LOADING and STORAGE OPERATIONS. During LOADING OPERATIONS, the fuel cladding temperature is limited to 400EC to assure cladding integrity.

This program shall establish administrative controls and procedures to assure that the spent fuel cladding does not exceed the temperature limit during LOADING OPERATIONS. For a CANISTER loaded with fuel with a total heat load of 22.0 kW, the total vacuum drying cycle shall be limited to 12 hours. If the vacuum drying LCO 3.1.2 has not been satisfied, the CANISTER shall be backfilled with helium for 4 hours, vacuum dried for 8 hours, backfilled for 4 hours, etc., until the LCO is met.

For a heat load of 17.5 kW or lower, there is no time limit on the initial vacuum drying cycle. For heat loads greater than 17.5 kW but less than 22.0 kW, the program shall either use the 22.0 kW requirements, or establish suitable time limits to maintain the cladding temperature to less than or equal to 400EC for the specific CANISTER heat load.

5.3.7 Cladding Oxide Thickness Measurement Program

For fuel with a burnup exceeding 45 GWd/MTU, it is necessary to verify that cladding oxide layer thickness for fuel assemblies to be stored does not exceed 70 Fm.

This program shall establish administrative controls and procedures to verify oxide layer thickness by measurement of a statistical sample of limiting fuel assemblies.

5.3.8 Storage Cask Periodic Monitoring Program

See the STORAGE CASK Technical Specifications for the applicable information.

5.4 Special Requirements for First System in Place

The heat transfer characteristics of the cask system will be recorded by temperature measurements of the first STORAGE CASK placed in service with a heat load equal to or greater than 10kW. In accordance with 10CFR72.4, a letter report summarizing the results of the measurements shall be submitted to the NRC.

For each cask subsequently loaded with a higher heat load (up to the 22.0 kW limit), the calculation and measured temperature data shall be reported to the NRC at every 2 kW increase. The calculation and comparison need not be reported to the NRC for STORAGE CASKS that are subsequently loaded with lesser loads then the latest reported case.

Cask users may satisfy these requirements by referencing validation test reports submitted to the NRC by other users.

TECHNICAL SPECIFICATIONS BASES
FOR THE FuelSolutions™ W21 CANISTER

Revision 4

Page

B 2.0 FUNCTIONAL AND OPERATING LIMITS . . . . . B 2.0-1
B 2.1.1 Fuel to be Stored in the FuelSolutions™ W21 Canister . . . . . B 2.0-1

B 3.0 LIMITING CONDITION FOR OPERATION (LCO) APPLICABILITY . . . . . B 3.0-1

B 3.0 SURVEILLANCE REQUIREMENT (SR) APPLICABILITY . . . . . B 3.0-4

B 3.1 CANISTER INTEGRITY . . . . . B 3.1-1
B 3.1.1 W21 Canister Helium Backfill Density . . . . . B 3.1-1
B 3.1.2 Canister Vacuum Drying Pressure . . . . . B 3.1-3
B 3.1.3 Canister Leak Rate . . . . . B 3.1-4
B 3.1.4 Hydraulic Ram Force During Horizontal Canister Transfer . . . . . B 3.1-5
B 3.1.5 W21 Canister Vertical Time Limit in Transfer Cask . . . . . B 3.1-6

B 3.2 CANISTER RADIATION PROTECTION . . . . . B 3.2-1
B 3.2.1 Canister Surface Contamination . . . . . B 3.2-1

B 3.3 STORAGE CASK INTEGRITY . . . . . B 3.3-1
B 3.3.1 (Deleted) . . . . . B 3.3-1 |
B 3.3.2 Storage Cask Periodic Monitoring . . . . . B 3.3-2 |
B 3.3.3 Storage Cask Temperatures During Horizontal Transfer . . . . . B 3.3-7 |

B 3.4 TRANSFER CASK INTEGRITY . . . . . B 3.4-1
B 3.4.1 Transfer Cask Structural Shell Temperature . . . . . B 3.4-1

B 3.5 TRANSFER CASK RADIATION PROTECTION . . . . . B 3.5-1
B 3.5.1 Transfer Cask Surface Contamination . . . . . B 3.5-1

B 2.0 FUNCTIONAL AND OPERATING LIMITS

B 2.1.1 Fuel to be Stored in the FuelSolutions™ W21 Canister

BASES

BACKGROUND	The CANISTER design requires specifications for the spent fuel to be stored, such as class and type of spent fuel, maximum allowable initial enrichment, maximum burnup, post-irradiation cooling time prior to storage in the CANISTER, and cladding material and condition. Other important limitations are dimensions and weight of the fuel assemblies. These limitations are included in the thermal, structural, radiological, and criticality evaluations performed for the CANISTER and are specified in Section 2.0 (References 1, 2, 3).
APPLICABLE SAFETY ANALYSIS	To assure that the closure plate is not placed on the CANISTER containing an unauthorized fuel assembly, procedures require verification of the loaded fuel assemblies to assure that the correct fuel assemblies have been loaded in the CANISTER.
FUNCTIONAL AND OPERATING LIMITS VIOLATIONS	The following Functional and Operating Limits Violations are applicable: <u>2.2.1</u> If Functional and Operating Limit 2.1.1 is violated, the limitations on the fuel assemblies in the CANISTER have not been met. Actions must be taken to place the affected fuel assemblies in a safe condition. This safe condition may be established by returning the affected fuel assemblies to the spent fuel pool. However, it is acceptable for the affected fuel assemblies to remain in the CANISTER if that is determined to be a safe condition. <u>2.2.2 & 2.2.3</u> Notification of the violation of a Functional and Operating Limit to the NRC is required within 24 hours. Written reporting of the violation must be accomplished within 30 days. This notification and written report are independent of any reports and notification that may be required by 10CFR72.216.
REFERENCES	1. FuelSolutions™ W21 Canister Storage FSAR, Section 2.2 2. FuelSolutions™ W21 Canister Storage FSAR, Section 5.2 3. FuelSolutions™ W21 Canister Storage FSAR, Section 6.1

B 3.0 LIMITING CONDITION FOR OPERATION (LCO) APPLICABILITY

BASES

LCOs		LCO 3.0.1, 3.0.2, 3.0.4, and 3.0.5 establish the general requirements applicable to all Specifications and apply at all times, unless otherwise stated.
LCO	3.0.1	LCO 3.0.1 establishes the Applicability statement within each individual Specification as the requirement for when the LCO is required to be met (i.e., when the unit is in the specified conditions of the Applicability statement of each Specification).
LCO	3.0.2	LCO 3.0.2 establishes that upon discovery of a failure to meet an LCO, the associated ACTIONS shall be met. The Completion Time of each Required action for an ACTIONS Condition is applicable from the point in time that an ACTIONS Condition is entered. The Required Actions establish those remedial measures that must be taken within specified Completion Times when the requirements of an LCO are not met. This specification establishes that: a. Completion of the Required Actions within the specified Completion Times constitutes compliance with a Specification; and b. Completion of the Required Actions is not required when an LCO is met within the specified Completion Time, unless otherwise specified. There are two basic types of Required Actions. The first type of Required Action specifies a time limit in which the LCO must be met. This time limit is the Completion Time to restore a system or component or to restore variables to within specified limits. Whether stated as a Required Action or not, correction of the entered Condition is an action that may always be considered upon entering ACTIONS. The second type of Required Action specifies the remedial measures that permit continued operation that is not further restricted by the Completion Time. In this case, compliance with the Required Actions provides an acceptable level of safety for continued operation. Completing the Required Actions is not required when an LCO is met or is no longer applicable, unless otherwise stated in the individual Specifications.

(continued)

LCO 3.0.2 (continued)	The Completion Times of the Required Actions are also applicable when a system or component is removed from service intentionally. The reasons for intentionally relying on the ACTIONS include, but are not limited to, performance of Surveillances, preventive maintenance, corrective maintenance, or investigation of operational problems. Entering ACTIONS for these reasons must be done in a manner that does not compromise safety. Intentional entry into ACTIONS should not be made for operational convenience.
LCO 3.0.3	Not Applicable.
LCO 3.0.4	LCO 3.0.4 establishes limitations on changes in specified conditions in the Applicability when an LCO is not met. It precludes placing the facility in a specified condition stated in that Applicability (e.g., Applicability desired to be entered) when the following exist: a. ISFSI conditions are such that the requirements of the LCO would not be met in the Applicability desired to be entered; and b. Continued noncompliance with the LCO requirements, if the Applicability were entered, would result in ISFSI activities being required to exit the Applicability desired to be entered to comply with the Required Actions. Compliance with Required Actions that permit continued operation for an unlimited period of time in a specified condition provides an acceptable level of safety for continued operation. This is without regard to the status of the ISFSI. Therefore, in such cases, entry into a specified condition in the Applicability may be made in accordance with the provisions of the Required Actions. The provisions of this Specification should not be interpreted as endorsing the failure to exercise the good practice of restoring systems or components before entering an associated specified condition in the Applicability. The provisions of LCO 3.0.4 shall not prevent changes in specified conditions in the Applicability that are required to comply with ACTIONS. In addition, the provisions of LCO 3.0.4 shall not prevent changes in specified conditions in the Applicability that are related to the unloading of a CANISTER. Exceptions to LCO 3.0.4 are stated in the individual Specifications. Exceptions may apply to all the ACTIONS or to a specific Required Action of a Specification.

LCO 3.0.5	LCO 3.0.5 establishes the allowance for restoring equipment to service under administrative controls when it has been removed from service or determined to not meet the LCO to comply with ACTIONS. The sole purpose of this Specification is to provide an exception to LCO 3.0.2 (e.g., to not comply with the applicable Required Actions(s)) to allow the performance of SRS to demonstrate: a. The equipment being returned to service meets the LCO; or b. Other equipment meets the applicable LCOs. The administrative controls assure the time the equipment is returned to service in conflict with the requirements of the ACTIONS is limited to the time absolutely necessary to perform the allowed testing. This Specification does not provide time to perform any other preventive or corrective maintenance.
LCO 3.0.6	Not Applicable.
LCO 3.0.7	Not Applicable.

B 3.0 SURVEILLANCE REQUIREMENT (SR) APPLICABILITY

BASES

SRs	SR 3.0.1 through SR 3.0.4 establish the general requirements applicable to all Specifications and apply at all times, unless otherwise stated.
SR 3.0.1	SR 3.0.1 establishes the requirement that SRs must be met during the specified conditions in the Applicability for which the requirements of the LCO apply, unless otherwise specified in the individual SRs. This Specification is to assure that Surveillances are performed to verify the systems, components, and that variables are within specified limits. Failure to meet a surveillance within the specified Frequency, in accordance with SR 3.0.2, constitutes a failure to meet an LCO. Systems and components are assumed to meet the LCO when the associated SRS have been met. Nothing in this Specification, however, is to be construed as implying that systems or components meet the associated LCO when: a. The systems or components are known to not meet the LCO, although still meeting the SRS; or b. The requirements of the Surveillance(s) are known not to be met between required Surveillance performances. Surveillances do not have to be performed when the facility is in a specified condition for which the requirements of the associated LCO are not applicable, unless otherwise specified. Surveillances, including Surveillances invoked by Required Actions, do not have to be performed on equipment that has been determined to not meet the LCO because the ACTIONS define the remedial measures that apply. Surveillances have been met and performed in accordance with SR 3.0.2, prior to returning equipment to service. Upon completion of maintenance, appropriate post maintenance testing is required. This includes ensuring applicable Surveillances are not failed and their most recent performance is in accordance with SR 3.0.2. Post maintenance testing may not be possible in the current specified conditions in the Applicability due to the necessary facility (continued)

SR 3.0.1 (continued)	parameters not having been established. In these situations, the equipment may be considered to meet the LCO provided testing has been satisfactorily completed to the extent possible and the equipment is not otherwise believed to be incapable of performing its function. This will allow operation to proceed to a specified condition where other necessary post maintenance tests can be completed.
SR 3.0.2	SR 3.0.2 establishes the requirements for meeting the specified Frequency for Surveillances and any Required Action with a Completion Time that requires the periodic performance of the Required Action on a “once per...” interval. SR 3.0.2 permits a 25% extension of the interval specified in the Frequency. This extension facilitates Surveillance scheduling and considers plant operating conditions that may not be suitable for conducting the Surveillance (e.g., transient conditions or other ongoing Surveillance or maintenance activities). The 25% extension does not significantly degrade the reliability that results from performing the Surveillance at its specified Frequency. This is based on the recognition that the most probable result of any particular surveillance being performed is the verification of conformance with the SRs. The exceptions to SR 3.0.2 are those Surveillances for which the 25% extension of the interval specified in the Frequency does not apply. These exceptions are stated in the individual Specifications as a Note in the Frequency stating, “SR 3.0.2 is not applicable.” As stated in SR 3.0.2, the 25% extension also does not apply to the initial portion of a periodic Completion Time that requires performance on a “once per...” basis. The 25% extension applies to each performance after the initial performance. The initial performance of the Required Action, whether it is a particular Surveillance or some other remedial action, is considered a single action with a single Completion Time. One reason for not allowing the 25% extension to this Completion Time is that such an action usually verifies that no loss of function has occurred by checking the status of redundant or diverse components or accomplishes the function of the affected equipment in an alternative manner. The provisions of SR 3.0.2 are not intended to be used repeatedly merely as an operational convenience to extend Surveillance intervals or periodic Completion Time intervals beyond those specified.

SR 3.0.3

SR 3.0.3 establishes the flexibility to defer declaring affected equipment as not meeting the LCO or an affected variable outside the specified limits when a Surveillance has not been completed within the specified Frequency. A delay period of up to 24 hours or up to the limit of the specified Frequency, whichever is less, applies from the point in time that it is discovered that the Surveillance has not been performed in accordance with SR 3.0.2, and not at the time that the specified Frequency was not met.

This delay period provides adequate time to complete Surveillances that have been missed. This delay period permits the completion of a surveillance before complying with Required Actions or other remedial measures that might preclude completion of the Surveillance.

The basis for this delay period includes consideration of facility conditions, adequate planning, availability of personnel, the time required to perform the Surveillance, the safety significance of the delay in completing the required Surveillance, and the recognition that the most probable result of any particular Surveillance being performed is the verification of conformance with the requirements. When a Surveillance with a Frequency based not on time intervals, but upon specified facility conditions or operational situations, is discovered not to have been performed when specified, SR 3.0.3 allows the full delay period of 24 hours to perform the Surveillance.

SR 3.0.3 also provides a time limit for completion of Surveillances that become applicable as a consequence of changes in the specified conditions in the Applicability imposed by Required Actions.

Failure to comply with specified Frequencies for SRS is expected to be an infrequent occurrence. Use of the delay period established by SR 3.0.3 is a flexibility which is not intended to be used as an operational convenience to extend Surveillance intervals.

If a Surveillance is not completed within the allowed delay period, then the equipment is considered to not meet the LCO or the variable is considered outside the specified limits and the Completion times of the Required Actions for the applicable LCO Conditions begin immediately upon expiration of the delay period.

(continued)

SR 3.0.3 (continued)	If a Surveillance is failed within the delay period, then the equipment does not meet the LCO, or the variable is outside the specified limits and the Completion Times of the Required Actions for the applicable LCO Conditions begin immediately upon the failure of the Surveillance. Completion of the Surveillance within the delay period allowed by this Specification, or within the Completion Time of the ACTIONS, restores compliance with SR 3.0.1.
SR 3.0.4	SR 3.0.4 establishes the requirement that all applicable SRS must be met before entry into a specified condition in the Applicability. This Specification assures that system and component requirements and variable limits are met before entry into specified conditions in the Applicability for which these systems and component assure safe operation of the facility. The provisions of this Specification should not be interpreted as endorsing the failure to exercise the good practice of restoring systems or components before entering an associated specified condition in the Applicability. However, in certain circumstances, failing to meet an SR will not result in SR 3.0.4 restricting a change in specified condition. When a system, subsystem, component, device, or variable is outside its specified limits, the associated SR(s) are not required to be performed, per SR 3.0.1, which states that Surveillances do not have to be performed on such equipment. When equipment does not meet the LCO, SR 3.0.4 does not apply to the associated SR(s) since the requirement for the SR(s) to be performed is removed. Therefore, failing to perform the Surveillance(s) within the specified Frequency does not result in an SR 3.0.4 restriction to changing specified conditions of the Applicability. However, since the LCO is not met in this instance, LCO 3.0.4 will govern any restrictions that may (or may not) apply to specified condition changes. The provisions of SR 3.0.4 shall not prevent changes in specified conditions in the Applicability that are required to comply with ACTIONS. In addition, the provisions of LCO 3.0.4 shall not prevent changes in specified conditions in the Applicability that are related to the unloading of a CANISTER. (continued)

SR 3.0.4 (continued)

The precise requirements for performance of SRs are specified such that exceptions to SR 3.0.4 are not necessary. The specific time frames and conditions necessary for meeting the SRs are specified in the Frequency, in the surveillance, or both. This allows performance of Surveillances when the prerequisite condition(s) specified in a surveillance procedure require entry into the specified condition in the Applicability of the associated LCO prior to the performance or completion of a Surveillance. A Surveillance that could not be performed until after entering the LCO Applicability would have its Frequency specified such that it is not "due" until the specific conditions needed are met.

B 3.1 CANISTER INTEGRITY

B 3.1.1 W21 Canister Helium Backfill Density

BASES

BACKGROUND	A TRANSFER CASK with an empty CANISTER is placed in the spent fuel pool and loaded with fuel assemblies meeting the requirements of the Functional and Operating Limits. A shield plug is then placed in the CANISTER, and the TRANSFER CASK is raised to the spent fuel pool surface. The dose rates are measured near the center of the top shield plug. The TRANSFER CASK and CANISTER are then moved to the cask preparation area where the inner closure plate is welded to the CANISTER shell and a pressure test performed. The CANISTER is drained, vacuum-dried, and backfilled with helium. The CANISTER outer top closure plate is then welded to the CANISTER shell. Contamination measurements are completed prior to moving the TRANSFER CASK and CANISTER to the ISFSI. A W21 CANISTER containing fuel assemblies shall be backfilled with helium to maintain an inert atmosphere to prevent cladding degradation and promote heat transfer during storage. The density of helium is specified to maintain the CANISTER internal pressure under normal, off-normal, and postulated accident conditions within the design basis values. In addition, it assures that an adequate mass of helium is present in the CANISTER for heat transfer over the 100-year design life.
APPLICABLE SAFETY ANALYSIS	The confinement of radioactivity during the storage of spent fuel in the CANISTER within the STORAGE CASK is assured by the use of multiple confinement boundaries and systems. The barriers are the fuel pellet matrix, the metallic fuel cladding tubes in which the fuel pellets are contained, and the CANISTER in which the fuel assemblies are stored. Long-term integrity of the fuel and cladding depend on storage in a dry inert atmosphere. This is accomplished by removing water from the CANISTER and backfilling the cavity with an inert gas (Reference 1).
LCO	The backfill density is selected to assure that the CANISTER internal pressure remains within the design basis values used for normal, off-normal, and postulated accident storage conditions. The specified helium backfill density was selected based on a minimum helium purity of 99.995%.
APPLICABILITY	CANISTER helium backfilling is performed during LOADING OPERATIONS prior to transporting the CANISTER to the ISFSI (Reference 1).

ACTIONS	A note has been added to the Actions stating that a separate Condition entry is allowed for each CANISTER. This is acceptable since the Required Actions for each Condition provide appropriate compensatory measures for each CANISTER not meeting the LCO. Subsequent CANISTERs that do not meet the LCO are governed by subsequent Condition entry and application of associated Required Actions. A.1 If the required helium backfill cannot be met, actions must be taken to meet the LCO. Re-evacuate the CANISTER and backfill the CANISTER to comply with the LCO limit. See LCO 3.1.3 of the Storage System Technical Specification if the leak rate exceeds 8.52×10^{-6} ref-cc/sec. The Completion Time is sufficient to determine and correct most failures which would prevent backfilling the CANISTER cavity with helium. B.1 If the CANISTER cavity cannot be successfully backfilled with helium, the fuel must be removed and placed in a safe condition in the spent fuel pool. The Completion Time is reasonable based on the time required to return the fuel to the spent fuel pool in an orderly manner without challenging personnel.
SURVEILLANCE REQUIREMENTS	SR 3.1.1.1 The long-term integrity of the stored fuel is dependent on storage in a dry, inert environment. Filling the CANISTER cavity with the specified helium density will assure that there will be no air inleakage, which could potentially damage the fuel, and that the CANISTER cavity internal pressure will remain within limits for the 100-year design life of the CANISTER. Backfilling with helium must be performed successfully on each CANISTER before placing it in storage. The surveillance must be performed within 24 hours after verifying the CANISTER cavity vacuum drying pressure is within the limit. This allows sufficient time to backfill the CANISTER cavity with helium while minimizing the time the fuel is in the CANISTER without the assumed inert atmosphere.
REFERENCES	1. FuelSolutions™ Storage System FSAR, Section 8.1.8.

B 3.1 CANISTER LIMITS

B 3.1.2 Canister Vacuum Drying Pressure

BASES

See the Storage System Technical Specification for the applicable Bases.

B 3.1 CANISTER INTEGRITY

B 3.1.3 Canister Leak Rate

BASES

See the Storage System Technical Specification for the applicable Bases.

B 3.1 CANISTER INTEGRITY

B 3.1.4 Hydraulic Ram Force During Horizontal Canister Transfer

BASES

See the Storage System Technical Specification for the applicable Bases.

B 3.1 CANISTER INTEGRITY

B 3.1.5 W21 Canister Vertical Time Limit in Transfer Cask

BASES

BACKGROUND	During CANISTER draining, vacuum drying, backfill, and closure operations, the TRANSFER CASK annulus is filled with water. Water flow is provided as necessary to minimize TRANSFER CASK and CANISTER temperatures. Upon completion of the final CANISTER closure weld and non-destructive examination, the TRANSFER CASK annulus is drained as a predecessor to TRANSFER OPERATIONS. The TRANSFER OPERATIONS must be initiated within the specified time so the CANISTER basket spacer plate temperatures remain within the design basis temperatures.
APPLICABLE SAFETY ANALYSIS	The thermal analyses of the CANISTER in the TRANSFER CASK (Reference 1) show the CANISTER basket temperatures that correspond to design basis conditions and configuration. Completing the subsequent TRANSFER OPERATIONS within the specified time limit assures that spacer plate strength will be adequate to accommodate a postulated handling accident.
LCO	For vertical TRANSFER OPERATIONS, completion of the CANISTER transfer out of the TRANSFER CASK within the specified time after draining of the annulus water from the TRANSFER CASK assures that the CANISTER remains within design basis limits for all postulated normal, off-normal, and accident conditions. For horizontal TRANSFER OPERATIONS, completion of the movement of the TRANSFER CASK to the horizontal position on the transfer trailer within the specified time after draining of the annulus water from the TRANSFER CASK assures that the CANISTER remains within design basis limits for all postulated normal, off-normal, and accident conditions.
APPLICABILITY	The specified time limit applies during TRANSFER OPERATIONS.
ACTIONS	A note has been added to the Actions stating that a separate Condition entry is allowed for each CANISTER. This is acceptable since the Required Actions for each Condition provide appropriate compensatory measures for each CANISTER not meeting the LCO. Subsequent CANISTERs that do not meet the LCO are governed by subsequent Condition entry and application of associated Required Actions. (continued)

ACTIONS (continued)	A.1 If the indicated time limit is exceeded, then it is required to return the CANISTER to a cooler conditions by providing the heat removal capability provided by the annulus water. The first step in this recovery process is to flood the annulus with water. The Completion Time is sufficient to complete this action. A.2 The use of annulus cooling, if required, aids in the removal of decay heat from the CANISTER. The Completion Time is sufficient to complete the application of cooling. Upon reestablishment of the steady-state condition which existed before the initial draining of the annulus, the annulus may be drained and the time limit measurement restarted for completion of subsequent TRANSFER OPERATIONS.
SURVEILLANCE REQUIREMENTS	SR 3.1.5.1 Verification that the TRANSFER CASK operations with the CANISTER in vertical orientation and annulus drained are completed within the time limit assures that the CANISTER basket temperatures remain within their limits.
REFERENCES	1. FuelSolutions™ W21 Canister Storage FSAR, Section 4.4.

B 3.2 CANISTER RADIATION PROTECTION

B 3.2.1 Canister Surface Contamination

BASES

See the Storage System Technical Specification for the applicable Bases.

(Deleted) |
B 3.3.1

B 3.3 STORAGE CASK INTEGRITY

B 3.3.1 (Deleted) |

|

B 3.3 STORAGE CASK INTEGRITY

B 3.3.2 Storage Cask Periodic Monitoring

BASES

BACKGROUND	After placement on the ISFSI pad, the heat from the fuel assemblies within the CANISTER is removed by air flowing past the CANISTER, entering in the inlet vents and exiting through the outlet vents in the STORAGE CASK. Due to the design and construction of the STORAGE CASK and CANISTER, blockage or obstruction of the air flow within the STORAGE CASK vent channels or STORAGE CASK annulus under normal or off-normal conditions is not credible. Blockage of the STORAGE CASK vent screens with wind-blown debris, snow, or ice are the most likely causes of air flow obstruction. Periodic monitoring of the STORAGE CASK, either by the STORAGE CASK liner thermocouple temperature measurement or by visual inspection of the STORAGE CASK inlet and outlet vent screens, assures that the heat removal capability of the STORAGE CASK is not compromised.
APPLICABLE SAFETY ANALYSIS	The thermal analyses of the STORAGE CASK (Reference 1) and CANISTERs (Reference 2) result in system temperatures that correspond to the design basis conditions and configuration. The design basis thermal analyses for normal and off-normal ambient conditions are based on the unobstructed flow area of the STORAGE CASK inlet and outlet vents and associated vent screens. Accident condition analyses for a postulated complete blockage of all STORAGE CASK inlet and outlet vent screens are provided for a range of heat loads. The blocked-vent thermal analysis results provide the bases for the surveillance requirements of the storage cask periodic monitoring program. (continued)

APPLICABLE SAFETY ANALYSIS (continued)	The STORAGE CASK liner thermocouple temperature limits provided in the *storage cask periodic monitoring program* are based upon the results of the blocked-vent thermal evaluation. The maximum allowable liner thermocouple temperatures under normal or off-normal ambient conditions are based on the initial steady-state conditions from the blocked-vent thermal analyses, with appropriate adjustments for changes in ambient air temperature. Liner thermocouple temperatures that exceed the temperature limits of the storage cask periodic monitoring program indicate blockage of the STORAGE CASK vents, a condition that needs to be corrected to maintain temperatures within acceptable limits.
LCO	Blockage of air flow through the STORAGE CASK vents causes the temperatures within the STORAGE CASK, CANISTER, and fuel to increase. Vent blockage is identified by either visual inspection of the STORAGE CASK inlet and outlet vent screens <u>OR</u> an increase in the temperature of the STORAGE CASK concrete, as indicated by the STORAGE CASK liner thermocouple. Periodic monitoring of the STORAGE CASK assures that blockage of the STORAGE CASK vents can be identified and corrective actions can be initiated before the temperatures of the fuel cladding or STORAGE CASK concrete exceed the short-term temperature limits. This assures long-term integrity of the STORAGE CASK concrete and the fuel assembly cladding.
APPLICABILITY	STORAGE CASK periodic monitoring is performed during STORAGE OPERATIONS.
ACTIONS	A note has been added to the Actions stating that a separate Condition entry is allowed for each STORAGE CASK. This is acceptable since the Required Actions for each Condition provide appropriate compensatory measures for each STORAGE CASK not meeting the LCO. Subsequent STORAGE CASKs that do not meet the LCO are governed by subsequent Condition entry and application of associated Required Actions. Actions A.1 and A.2 apply when visual inspection of the vent screens is used for periodic monitoring of the STORAGE CASK. Action A.3 applies when the liner thermocouple temperature is used for periodic monitoring of the STORAGE CASK.

(continued)

ACTIONS (continued)

A.1

If visual inspection of the vent screens reveals blockage such as debris, snow, or ice, clear blocked or partially blocked air inlet and outlet vent screens to permit unobstructed cooling air flow for the STORAGE CASK.

The Completion Time is sufficient to perform the required Actions.

A.2

If visual inspection of the vent screens reveals significant damage, the damaged vent screens must be removed for repair or replacement. Damage that significantly reduces flow area may cause the STORAGE CASK temperatures to increase. Damage that increases access to the vent channels (e.g., detached screen) may permit debris or other obstructions to accumulate inside the vent channels. In this case, the STORAGE CASK vent channels should be visually inspected for debris or obstructions and cleared prior to attaching the repaired or replacement vent screen.

The Completion Times are sufficient to perform the required Actions.

A.3

If the indicated concrete temperature is greater than any of the specified limits, all STORAGE CASK inlet and outlet vents and screens is checked for blockage or damage. If blockage or damage of any of the vent screens is identified, then Actions A.1 and A.2 are used to restore cooling air flow in order to maintain safe storage conditions. If there are no visible signs of vent blockage or damage, then the temperature monitoring equipment is checked to assure that it is functioning properly. If it is not functioning properly, it is repaired or replaced. The liner thermocouple temperature is monitored to assure that the temperature returns within the long-term local concrete temperature limit of 200EF. The liner thermocouple temperature continues to be monitored to assure that the temperature returns within the applicable limit of the *storage cask periodic monitoring program*. A STORAGE CASK temperature that does not return within the limit indicates that air flow is not completely restored and additional action is required.

The Completion Time is sufficient to determine and correct most failure mechanisms. Due to the large thermal mass of the STORAGE CASK, several days may be required for the cask temperatures to fall below the temperature limits of the *storage cask periodic monitoring program* after blockage is removed.

(continued)

ACTIONS (continued)	B.1 - B.2 If the required actions cannot be successfully completed within the required completion times, then mitigating actions must be taken to cool the STORAGE CASK within the limits until other measures can be employed. The STORAGE CASK interior may be inspected for obstructions using remote visual aids inserted through the vent channels or by temporarily removing the STORAGE CASK top cover. Any obstructions should be removed, if possible. With the STORAGE CASK top cover reinstalled, monitor the liner thermocouple temperature to assure that the STORAGE CASK temperature returns within limits. If the STORAGE CASK temperature does not return within limits, the CANISTER can be retrieved to the TRANSFER CASK (which has been evaluated to maintain acceptable temperatures under steady state conditions). The licensee will temporarily store the CANISTER in the TRANSFER CASK in a horizontal configuration bounded by that analyzed in the FSAR, and any supplemental shielding that is determined necessary to maintain dose rates within the limits of 10 CFR 72.104 on a site-specific basis will be evaluated in accordance with 10 CFR 72.48. The Completion Times are reasonable based on the time required to establish cooling actions and place the CANISTER into the TRANSFER CASK, and to return CANISTER to a repaired or replacement STORAGE CASK, in an orderly manner without challenging personnel. The potential for freezing of the transfer cask liquid neutron shield during temporary storage will be evaluated on a cask- and site-specific basis, and measures will be implemented, if necessary, to prevent freezing.
SURVEILLANCE REQUIREMENTS	SR 3.1.2.1 The STORAGE CASK is to be monitored with adequate frequency to assure that a licensee can take corrective actions to maintain safe storage conditions. The monitoring frequencies provided in the *storage cask periodic monitoring program*, which are based upon the STORAGE CASK design requirements, provide adequate time to initiate corrective actions to maintain safe storage conditions.
REFERENCES	1. FuelSolutions™ Storage System FSAR, Sections 4.4.1 and 4.6.1. 2. FuelSolutions™ W21 Canister Storage FSAR, Sections 4.4.1 and 4.6.1.

B 3.3 STORAGE CASK INTEGRITY

B 3.3.3 Storage Cask Temperatures During Horizontal Transfer

BASES

BACKGROUND	When a STORAGE CASK with a CANISTER containing fuel assemblies is in the horizontal orientation, the natural convective air flow that cools the CANISTER is altered. The STORAGE CASK thermocouple temperature is correlated through analysis to the maximum concrete temperature near the liner/concrete interface. Assuring that the storage cask thermocouple temperature limit is not exceeded assures that the short-term allowable concrete temperature is not exceeded.
APPLICABLE SAFETY ANALYSIS	The basis for maintaining this STORAGE CASK temperature limit is the thermal analysis contained in Chapter 4 of the Storage System FSAR (Reference 1). The specified temperature limit is correlated to the short-term allowable concrete temperature.
LCO	Limiting the concrete temperature during horizontal CANISTER TRANSFER OPERATIONS maintains the STORAGE CASK concrete temperatures within the design basis.
APPLICABILITY	Temperature monitoring is performed during horizontal TRANSFER OPERATIONS.
ACTIONS	A note has been added to the Actions stating that a separate Condition entry is allowed for each STORAGE CASK. This is acceptable since the Required Actions for each Condition provide appropriate compensatory measures for each STORAGE CASK not meeting the LCO. Subsequent STORAGE CASKs that do not meet the LCO are governed by subsequent Condition entry and application of associated Required Actions. <u>A.1</u> If the STORAGE CASK concrete temperature limit is not met, then it is required to take action to reduce the STORAGE CASK concrete temperature. This may be accomplished by removing the CANISTER from the STORAGE CASK into the TRANSFER CASK. The Completion Time is adequate to perform this task.

(continued)

ACTIONS (continued)

B.1

The STORAGE CASK should be inspected for signs of damage to the concrete. The Completion time is adequate to perform the inspection and assessment.

B.2.1

If the STORAGE CASK is undamaged, it may be reused. The Completion Time is reasonable based on the time to complete the TRANSFER OPERATIONS.

B.2.2

If the STORAGE CASK is damaged, then it may not be used. A new STORAGE CASK will be required to store the CANISTER. The Completion Time is reasonable based on the time to complete the TRANSFER OPERATIONS.

C.1 - C.2

If the CANISTER cannot be placed into storage within the specified time, mitigating actions must be initiated. The CANISTER can be retrieved to the TRANSFER CASK (which has been evaluated to maintain acceptable temperatures under steady state conditions). The licensee will temporarily store the CANISTER in the TRANSFER CASK in a horizontal configuration bounded by that analyzed in the FSAR, and any supplemental shielding that is determined necessary to maintain dose rates within the limits of 10 CFR 72.104 on a site-specific basis will be evaluated in accordance with 10 CFR 72.48. The CANISTER will be returned to a repaired or replacement STORAGE CASK for continued long-term storage. The Completion Times are reasonable based on the time required to place the CANISTER into the TRANSFER CASK, and to return the CANISTER to a repaired or replacement STORAGE CASK, in an orderly manner without challenging personnel.

The potential for freezing of the transfer cask liquid neutron shield during temporary storage will be evaluated on a cask- and site-specific basis, and measures will be implemented, if necessary, to prevent freezing.

BASES

SURVEILLANCE REQUIREMENTS	SR 3.3.3.1 The STORAGE CASK liner temperature is to be checked every 30 minutes when the STORAGE CASK is in a horizontal orientation with a CANISTER containing fuel assemblies. The frequency of inspection assumes that temperatures remain within limits and provide adequate time to initiate corrective actions.
REFERENCES	1. FuelSolutions™ Storage System FSAR, Section 4.5.

B 3.4 TRANSFER CASK INTEGRITY

B 3.4.1 Transfer Cask Structural Shell Temperature

BASES

See the Storage System Technical Specification for the applicable Bases.

B 3.5 TRANSFER CASK RADIATION PROTECTION

B 3.5.1 Transfer Cask Surface Contamination

BASES

See the Storage System Technical Specification for the applicable Bases.

13. QUALITY ASSURANCE

Quality Assurance of the FuelSolutions™ W21 canister is addressed in the quality assurance discussion provided in Chapter 13 of the FuelSolutions™ Storage System FSAR.[1]

[1] WSNF-220, *FuelSolutions™ Storage System Final Safety Analysis Report*, NRC Docket No. 72-1026, BNG Fuel Solutions.

This page intentionally left blank.

14. DECOMMISSIONING

Decommissioning of the FuelSolutions™ W21 canister is addressed in the canister decommissioning discussion provided in Chapter 14 of the FuelSolutions™ Storage System FSAR.[1]

[1] WSNF-220, *FuelSolutions™ Storage System Final Safety Analysis Report*, NRC Docket No. 72-1026, BNG Fuel Solutions.

This page intentionally left blank.