WESTINGHOUSE PROPRIETARY CLASS 3

RCS FLOW UNCERTAINTIES WITH THE USE OF ROSEMONT RTD'S

PREPARED BY C. R. TULEY

JULY/1984

8409050415 840830
PDR ADOCK 05000390
A PDR

I. INTRODUCTION

RCS flow is monitored by the performance of a precision flow calorimetric measurement at the beginning of each cycle. The RCS loop elbow taps can then be normalized against the precision calorimetric and used for monthly surveillance (with a small increase in total uncertainty) or a precision flow calorimetric can be performed on the monthly surveillance schedule. The analysis presented in this report documents both measurements, i.e., the calorimetric and the elbow tap normalization uncertainties.

Since 1978 Westinghouse has been deeply involved with the development of several techniques to treat instrumentation uncertainties, errors, and allowances. The earlier versions of these techniques have been documented for several plants; one approach uses the methodology outlined in WCAP-8567 "Improved Thermal Design Procedure"[1,2,3] which is based on the conservative assumption that the uncertainties can be described with uniform probability distributions. The other approach is based on the more realistic assumption that the uncertainties can be described with normal probability distributions. This assumption is also conservative in that the "tails" of the normal distribution are in reality "chopped" at the extremes of the range, i.e., the ranges for uncertainties are finite and thus, allowing for some probability in excess of the range limits is a conservative assumption. This approach has been used to substantiate the acceptability of the protection system setpoints for several plants with a Westinghouse NSSS, e.g., D. C. Cook II[4], North Anna Unit 1, Salem Unit 2, Sequoyah Unit 1, V. C. Summer, and McGuire Unit 1. Westinghouse now believes that the latter approach can be used for the determination of the instrumentation errror and allowances for all the parameters. The total instrumentation errors presented in this response are based on this approach.

II. METHODOLOGY

The methodology used to combine the error components for a channel is basically the appropriate statistical combination of those groups of components which are statistically independent, i.e., not interactive. Those errors which are not independent are combined arithmetically to form independent groups, which can then be systematically combined. The statistical combination technique used by Westinghouse is the [ ]+a,c,e of the instrumentation uncertainties. The instrumentation uncertainties are two sided distributions. The sum of both sides is equal to the range for that parameter, e.g., Rack Drift is typically [ ]+a,c, the range for this parameter is [ ]a,c. This technique has been utilized before as noted above and has been endorsed by the staff (5,6,7) and various industry standards(8,9).

The relationship between the error components and the statistical instrumentation error allowance for a channel is defined as follows:

1. For parameter indication in the racks using a DVM;

[ ] +a,c

Eq. 1

2. For parameter indication utilizing the plant process computer;

[ ] +a,c

Eq. 2

where:

CSA = Channel Statistical Allowance
PMA = Process Measurement Accuracy
PEA = Primary Element Accuracy
SCA = Sensor Calibration Accuracy
SD = Sensor Drift
STE = Sensor Temperature Effects
SPE = Sensor Pressure Effects
RCA = Rack Calibration Accuracy
RD = Rack Drift
RTE = Rack Temperature Effects
DVM = Digital Voltmeter Accuracy
ID = Computer Isolator Drift
A/D = Analog to Digital Conversion Accuracy

The parameters above are as defined in reference 4 and are based on SAMA standard PMC-20-1973[10]. However, for ease in understanding they are paraphrased below:

PMA - non-instrument related measurement errors, e.g., temperature stratification of a fluid in a pipe,
PEA - errors due to metering devices, e.g., elbows, venturis, orifices,
SCA - reference (calibration) accuracy for a sensor/transmitter,
SD - change in input-output relationship over a period of time at reference conditions for a sensor/transmitter,
STE - change in input-output relationship due to a change in ambient temperature for a sensor/transmitter,
SPE - change in input-output relationship due to a change in static pressure for a Δp cell.
RCA - reference (calibration) accuracy for all rack modules in loop or channel assuming the loop or channel is tuned to this accuracy. This assumption eliminates any bias that could be set up through calibration of individual modules in the loop or channel.
RD - change in input-output relationship over a period of time at reference conditions for the rack modules,

RTE - change in input-output relationship due to a change in ambient temperature for the rack modules.

DVM - the measurement accuracy of a digital voltmeter or multimeter on its most accurate applicable range for the parameter measured,

ID - change in input-output relationship over a period of time at reference conditions for a control/protection signal isolating device,

A/D - allowance for conversion accuracy of an analog signal to a digital signal for process computer use.

A more detailed explanation of the Westinghouse methodology noting the interaction of several parameters is provided in reference 4.

III. INSTRUMENTATION UNCERTAINTIES

The plant Technical Specifications require an RCS flow measurement with a high degree of accuracy. It is assumed for this error analysis, that this flow measurement is performed within seven days of calibrating the measurement instrumentation therefore, drift effects are not included (except where necessary due to sensor location). It is also assumed that the calorimetric flow measurement is performed at the beginning of a cycle, so no allowances have been made for feedwater venturi crud buildup.

The flow measurement is performed by determining the steam generator thermal output, corrected for the RCP heat input and the loop's share of primary system heat losses, and the enthalpy rise (Δh) of the primary coolant. Assuming that the primary and secondary sides are in equilibrium, the RCS vessel flow is the sum of the individual primary loop flows, i.e.,

$$W_{RCS} = \Sigma W_L \quad . \qquad \text{(Eq. 3)}$$

The individual primary loop flows are determined by correcting the thermal output of the steam generator for steam generator blowdown (if not secured),

subtracting the RCP heat addition, adding the loop's share of the primary side system losses, dividing by the primary side enthalpy rise, and multiplying by the specific volume of the RCS cold leg. The equation for this calculation is:

$$W_L = \frac{(\gamma)\left\{ Q_{SG} - Q_p + \left(\frac{Q_L}{N}\right) \right\} \left(V_c\right)}{[h_H - h_c]} \qquad \text{(Eq. 4)}$$

where;

W_L	=	Loop flow (gpm)
γ	=	0.1247 gpm/(ft^3/hr)
Q_{SG}	=	Steam Generator thermal output (Btu/hr)
Q_p	=	RCP heat adder (Btu/hr)
Q_L	=	Primary system net heat losses (Btu/hr)
V_c	=	Specific volume of the cold leg at T_C (ft^3/lb)
N	=	Number of primary side loops
h_H	=	Hot leg enthalpy (Btu/lb)
h_c	=	Cold leg enthalpy (Btu/lb)

The thermal output of the steam generator is determined by the same calorimetric measurement as for reactor power, which is defined as:

$$Q_{SG} = (h_s - h_f)\, W_f \qquad \text{(Eq. 5)}$$

where,

h_s	=	Steam enthalpy (Btu/lb)
h_f	=	Feedwater enthalpy (Btu/lb)
W_f	=	Feedwater flow (lb/hr)

The steam enthalpy is based on measurement of steam generator outlet steam pressure, assuming saturated conditions. The feedwater enthalpy is based on the measurement of feedwater temperature and an assumed feedwater pressure based on steamline pressure plus 100 psi. The feedwater flow is determined by

multiple measurements and the same calculation as used for reactor power measurements, which is based on the following:

$$W_f = (K)\ (F_a)\ \{\sqrt{\rho_f\ \Delta p}\} \qquad \text{(Eq. 6)}$$

where,

K	=	Feedwater venturi flow coefficient
F_a	=	Feedwater venturi correction for thermal expansion
ρ_f	=	Feedwater density (lb/ft^3)
Δp	=	Feedwater venturi pressure drop (inches H_2O)

The feedwater venturi flow coefficient is the product of a number of constants including as-built dimensions of the venturi and calibration tests performed by the vendor. The thermal expansion correction is based on the coefficient of expansion of the venturi material and the difference between feedwater temperature and calibration temperature. Feedwater density is based on the measurement of feedwater temperature and feedwater pressure. The venturi pressure drop is obtained from the output of the differential pressure cell connected to the venturi.

The RCP heat adder is determined by calculation, based on the best estimates of coolant flow, pump head, and pump hydraulic efficiency.

The primary system net heat losses are determined by calculation, considering the following system heat inputs and heat losses:

Charging flow
Letdown flow
Seal injection flow
RCP thermal barrier cooler heat removal
Pressurizer spray flow
Pressurizer surge line flow
Component insulation heat losses
Component support heat losses
CRDM heat losses

A single calculated sum for full power operation is used for these losses/heat inputs.

The hot leg and cold leg enthalpies are based on the measurement of the hot leg temperature, cold leg temperature and the pressurizer pressure. The cold leg specific volume is based on measurement of the cold leg temperature and pressurizer pressure.

The RCS flow measurement is thus based on the following plant measurements:

Steamline pressure (P_s)
Feedwater temperature (T_f)
Feedwater pressure (P_f)
Feedwater venturi differential pressure (Δp)
Hot leg temperature (T_H)
Cold leg temperature (T_C)
Pressurizer pressure (P_p)
Steam generator blowdown (if not secured)

and on the following calculated values:

Feedwater venturi flow coefficients (K)
Feedwater venturi thermal expansion correction (F_a)
Feedwater density (ρ_f)
Feedwater enthalpy (h_f)
Steam enthalpy (h_s)
Moisture carryover (impacts h_s)
Primary system net heat losses (Q_L)
RCP heat adder (Q_p)
Hot leg enthalpy (h_H)
Cold leg enthalpy (h_c)

These measurements and calculations are presented schematically on Figure 1.

Starting off with the Equation 6 parameters, the detailed derivation of the measurement errors is noted below.

Feedwater Flow

Each of the feedwater venturis is calibrated by the vendor in a hydraulics laboratory under controlled conditions to an accuracy of [ ]$^{+a,b,c}$% of span. The calibration data which substantiates this accuracy is provided for all plant venturis by the respective vendors. An additional uncertainty factor of [ ]$^{+a,c}$% is included for installation effects, resulting in an overall flow coefficient (K) uncertainty of [ ]$^{+a,b,c}$%. Since RCS loop flow is proportional to steam generator thermal output which is proportional to feedwater flow, the flow coefficient uncertainty is expressed as [ ]$^{+a,b,c}$% flow.

The uncertainty applied to the feedwater venturi thermal expansion correction (F_a) is based on the uncertainties of the measured feedwater temperature and the coefficient of thermal expansion for the venturi material, usually 304 stainless steel. For this material, a change of ±2°F in the feedwater temperature range changes F_a by [ ]$^{+a,b,c}$% and the steam generator thermal output by the same amount. For this derivation, an uncertainty of [ ]$^{+a,c}$°F in feedwater temperature was assumed. This results in a negligible impact in F_a and steam generator output.

Based on data introduced into the ASME Code, the uncertainty in F_a for 304 stainless steel is ±5%. This results in an additional uncertainty of [ ]$^{+a,c}$% in feedwater flow. A conservative value of [ ]$^{+a,c}$% is used in this analysis.

Using the ASME Steam Tables (1967) for compressed water, the effect of a [ ]$^{+a,c}$ error in feedwater temperature on the $\sqrt{\rho_f}$ is [ ]$^{+a,c}$% in steam generator thermal output. An error of [ ]$^{+a,c}$ in feedwater pressure is conservatively assumed in this analysis. This results in an uncertainty in $\sqrt{\rho_f}$ of [ ]$^{+a,c}$% in steam generator thermal output.

It is assumed that the Δp cell (usually a Barton or Rosemount) is read locally and within seven days of the Δp cell and local meter calibration. This allows the elimination of process rack and sensor drift errors from consideration. Therefore, the Δp cell errors noted in this analysis are [ ]$^{+a,c}$% for calibration and [ ]$^{+a,c}$% for reading error of the special high accuracy, local gauge. These two errors are in %Δp span. In

order to be useable in this analysis they must be translated into % feedwater flow at full power conditions. This is accomplished by multiplying the error in %Δp span by the conversion factor noted below:

$$\left(\frac{1}{2}\right)\left(\frac{\text{span of feedwater flow transmitter in percent of nominal flow}}{100}\right)^2$$

For a feedwater flow transmitter span of [ ]$^{+a,c}$% nominal flow, the conversion factor is [ ]$^{+a,c}$% (which is the value used in this analysis).

Feedwater Enthalpy

The next major error component is the feedwater enthalpy used in Equation 5. For this parameter the major contributor to the error is the uncertainty in the feedwater temperature. It is assumed that the feedwater temperature is determined through the use of an RTD or thermocouple whose output is read by a digital voltmeter (DVM) or digital multimeter (DMM) (at the output of the RTD or by a four lead bridge for RTD's, or at the reference junction for thermocouples). It is also assumed that the process components of the above are calibrated within 7 days prior to the measurement allowing the elimination of drift effects. Therefore, the error breakdown for feedwater temperature (assuming the use of a Rosemount RTD) is as noted on Table 1. The statistical combination of these errors results in a total feedwater temperature error of [ ]$^{+a,c}$°F. However, for this analysis a more conservative temperature error of [ ]$^{+a,c}$ is used.

Using the ASME Steam Table (1967) for compressed water, the effect of a [ ]$^{+a,c}$°F error in feedwater temperature on the feedwater enthalpy (h_f) is [ ]$^{+a,c}$% in steam generator thermal output. Assuming a [ ]$^{+a,c}$ error in feedwater pressure results in a [ ]$^{+a,c}$% effect in h_f and steam generator thermal output.

Steam Enthalpy

The steam enthalpy has two contributors to the calorimetric error, steamline pressure and the moisture content. For steamline pressure the error breakdown

is as noted on Table 1. This results in a total instrumentation error of [ ]$^{+a,c}$% which equals [ ]$^{+a,c}$ for a 1200 psi span. For this analysis a conservative value of [ ]$^{+a,c}$ is assumed for the steamline pressure. The feedwater pressure is assumed to be 100 psi higher than the steamline pressure with a conservatively high measurement error of [ ]$^{+a,c}$. If feedwater pressure is measured on the same basis as the steamline pressure (with a DVM) the error is [ ]$^{+a,c}$% span, which equals [ ]$^{+a,c}$ for a 1500 psi span. Thus, an assumption of an error of [ ]$^{+a,c}$ is very conservative.

Using the ASME Steam Tables (1967) for saturated water and steam, the effect of a [ ]$^{+a,c}$ ([ ]$^{+a,c}$) error in steamline pressure on the steam enthalpy is [ ]$^{+a,c}$% in steam generator thermal output. Thus, a total instrumentation error of [ ]$^{+a,c}$ results in an uncertainty of [ ]$^{+a,c}$% in steam generator thermal output, as noted on Table 2.

The major contributor to h_s uncertainty is moisture content. The nominal or best estimate performance level is assumed to be [ ]$^{+a,c}$% which is the design limit to protect the high pressure turbine. The most conservative assumption that can be made in regards to maximizing steam generator thermal output is a steam moisture content of zero. This conservatism is introduced by assigning an uncertainty of [ ]$^{+a,c}$% to the moisture content, which is equivalent through enthalpy change to [ ]$^{+a,c}$% of thermal output.

Secondary Side Loop Power

The loop power uncertainty is obtained by statistically combining all of the error components noted for the steam generator thermal output (Q_{SG}) in terms of Btu/hr. Each loop's components are considered independent effects since they are independent measurements. The feedwater temperature and pressure uncertainties are common to several of the error components for a given loop and thus are treated in a corresponding manner to form independent quantities prior to the statistical combination.

A major effect, which is a bias and can affect all loops, is the accumulation of crud on the feedwater venturis. This fouling can affect the Δp for a

specified flow. Although it is conceivable that the crud accumulation could affect the static pressure distribution at the venturi throat pressure tap in a manner that would result in a higher flow for a specified Δp, the reduction in throat area resulting in a lower flow at the specified Δp is the effect that has been noted. No uncertainty has been included in the analysis for this effect. If venturi fouling is detected by the plant, the venturi should be cleaned, prior to performance of the measurement. If the venturi is not cleaned, the effect of the fouling on the determination of the feedwater flow, and thus, the steam generator power and RCS flow, should be measured and treated as a bias, i.e., the error due to venturi fouling should be added to the statistical summation of the rest of the measurement errors.

The net pump heat uncertainty is derived in the following manner. The primary system net heat losses and pump heat adder for a four loop plant are summarized as follows:

System heat losses	-2.0 MWt
Component conduction and convection losses	-1.4
Pump heat adder	+18.0
Net Heat input to RCS	+14.6 MWt

The uncertainties for these quantities are as follows: The uncertainty on systems heat losses, which is essentially all due to charging and letdown flows, has been estimated to be [ ]$^{+a,c}$% of the calculated value. Since direct measurements are not possible, the uncertainty on component conduction and convection losses has been assumed to be [ ]$^{+a,c}$% of the calculated value. Reactor coolant pump hydraulics are known to a relatively high confidence level, supported by the system hydraulics tests performed at Prairie Island II and by input power measurements from several plants, so the uncertainty for the pump heat adder is estimated to be [ ]$^{+a,c}$% of the best estimate value. Considering these parameters as one quantity which is designated the net pump heat uncertainty, the combined uncertainties are less than [ ]$^{+a,c}$% of the total, which is [ ]$^{+a,c}$% of core power.

Primary Side Enthalpy

The primary side enthalpy error contributors are T_H and T_C measurement errors and the uncertainty in pressurizer pressure. The instrumentation errors for T_H are as noted in Table 1. These errors are based on the assumption that the DVM has been recently calibrated (within 7 days prior to the measurement) and the DVM is used to read the output of the RTD, or a bridge, thus allowing the elimination of drift effects in the racks. The statistical combination of the above errors results in a T_H uncertainty of [ ]$^{+a,c}$.

Table 1 also provides the instrumentation error breakdown for T_C. The errors are based on the same assumptions as for T_H, resulting in a total T_C uncertainty of [ ]$^{+a,c}$.

Pressurizer pressure instrumentation errors are noted on Table 1. A sensor drift allowance of [ ]$^{+a,c}$% is included due to the difficulty in calibrating while at power. It is assumed calibration is performed only as required by plant Technical Specifications.

Statistically combining these errors results in the total pressurizer pressure uncertainty equaling [ ]$^{+a,c}$% of span, which equals [ ]$^{+a,c}$ for an [ ]$^{+a,c}$ span. In this analysis a conservative value of [ ]$^{+a,c}$ is used for the instrumentation error for pressurizer pressure.

The effect of an uncertainty of [ ]$^{+a,c}$ in T_H on h_H is approximately [ ]$^{+a,c}$% of loop flow. Thus, an error of [ ]$^{+a,c}$ in T_H introduces an uncertainty of [ ]$^{+a,c}$% in h_H. An error of [ ]$^{+a,c}$ in T_C is worth [ ]$^{+a,c}$% in h_C. Therefore, an error of [ ]$^{+a,c}$ in T_C results in an uncertainty of [ ]$^{+a,c}$%in h_C and loop flow. An uncertainty of [ ]$^{+a,c}$ in pressurizer pressure introduces an error of [ ]$^{+a,c}$% in h_H and [ ]$^{+a,c}$% in h_C.

Statistically combining the secondary side loop power uncertainties with the primary side enthalpy uncertainty results in a Primary Side Loop Flow Uncertainty of [ ]$^{+a,c}$% loop flow. The RCS flow uncertainty is the

statistical combination of the primary side loop flow error and the number of primary side loops in the plant. As noted in Table 2 the RCS Flow uncertainty for 4 loops is [ ]+a,c flow.

NORMALIZED ELBOW TAPS FOR RCS FLOW MEASUREMENT

Based on the results of Table 2, in order for a plant to assure operation within the analysis assumptions an RCS flow calorimetric would have to be performed once every 31 EFPD. However, this is an involved procedure which requires considerable staff and setup time. Therefore, many plants perform one flow calorimetric at the beginning of the cycle and normalize the loop elbow taps. This allows the operator to quickly determine if there has been a significant reduction in loop flow on a shift basis and to avoid a long monthly procedure. The elbow taps are forced to read 1.0 in the process racks after performance of the full power flow calorimetric, thus, the elbow tap and its Δp cell are seeing normal operating conditions at the time of calibration/normalization and 1.0 corresponds to the measured loop flow at the time of measurement.

For monthly surveillance to assure plant operation consistent with the analyses assumptions, two means of determining the RCS flow are available. One, to read the loop flows from the process computer, and two, to measure the output of the elbow tap Δp cells in the process racks with a DVM. The uncertainty for use of the process computer and its convolution with the calorimetric uncertainty is presented below. Measurement of the transmitter output in the racks is more accurate and thus is bounded by the computer uncertainty.

Assuming that only one elbow tap per loop is available to the process computer results in the following elbow tap measurement uncertainty:

	%Δp span	% flow
PMA	[	]+a,c
PEA		
SCA		
SPE		
STE		
SD		

	%Δp span	%flow
RCA	[	]+a,c
RTE		
RD		
ID		
A/D		
Readout		

Δp span is converted to flow on the same basis as feedwater flow for an instrument span of [ ]$^{+a,c}$. Using Eq. 2 results in a loop uncertainty of [ ]$^{+a,c}$% flow per loop. The total uncertainty for a four loop plant is [ ]$^{+a,c}$% flow.

The instrument/measurement uncertainties for normalized elbow taps and the flow calorimetric are statistically independent and are 95+% probability values. Therefore, the statistical combination of the standard deviations results in the following total flow uncertainty at a 95+% probability:

4 loops ~ $\pm$1.7% flow.

Table 3 summarizes the four loop RCS flow measurement uncertainties.

REFERENCES

1. Westinghouse letter NS-CE-1583, C. Eicheldinger to J. F. Stolz, NRC, dated 10/25/77.

2. Westinghouse letter NS-TMA-1806, T. M. Anderson to E. Case, NRC, dated 5/30/78.

3. Westinghouse letter NS-TMA-1837, T. M. Anderson to S. Varga, NRC, dated 6/23/78.

4. Westinghouse letter NS-TMA-1835, T. M. Anderson to E. Case, NRC, dated 6/22/78.

5. NRC letter, S. A. Varga to J. Dolan, Indiana and Michigan Electric Company, dated 2/12/81.

6. NUREG-0717 Supplement No. 4, Safety Evaluation Report related to the operation of Virgil C. Summer Nuclear Station Unit No. 1, Docket 50-395, August, 1982.

7. NRC proposed Regulatory Guide 1.105 Rev. 2, "Instrument Setpoints," dated 12/81 for implementation 6/82.

8. ANSI/ANS Standard 58.4-1979, "Criteria for Technical Specifications for Nuclear Power Stations."

9. ISA Standard S67.04, 1982, "Setpoints for Nuclear Safety-Related Instrumentation Used in Nuclear Power Plants."

10. Scientific Apparatus Manufacturers Association, Standard PMC-20-1-1973, "Process Measurement and Control Terminology."

FIGURE 1

RCS FLOW CALORIMETRIC SCHEMATIC

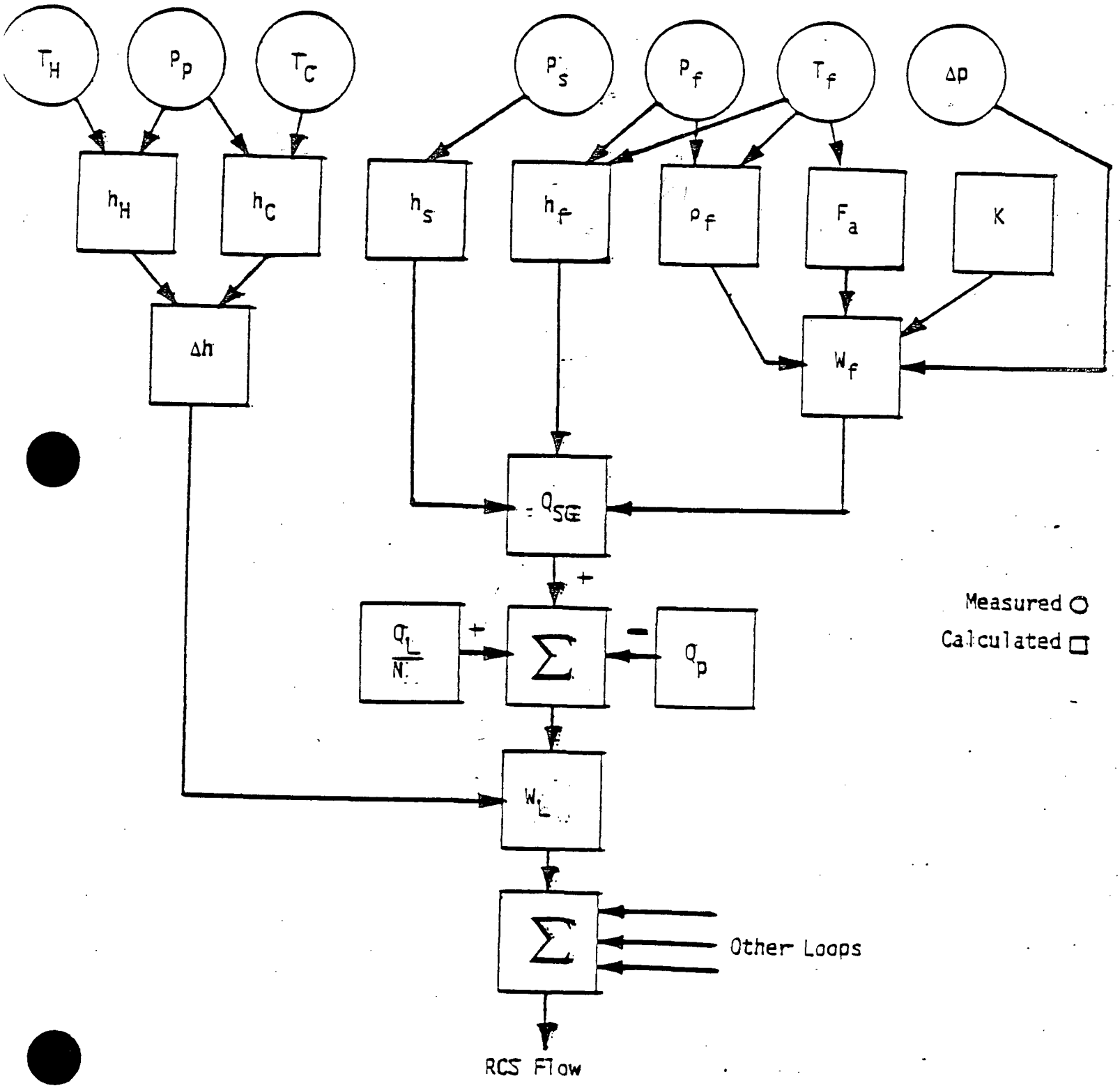

TABLE 1

TYPICAL INSTRUMENTATION UNCERTAINTIES
(Using Rosemount RTDs)

+a,c

	Feedwater Pressure Indication (Computer (1)	Feedwater ΔP Indication (Local (1)	Pressurizer Pressure Indication (DVM (1)	Feedwater Temperature Indication (DVM) (1)	Steamline Pressure Indication (DVM) (1)	T_H Indication (DVM) (1)	T_C Indication (DVM) (1)
PMA	–	–	–	–	–	–	–
PEA	–	–	–	–	–	–	–
SCA							
SD		–		–	–	–	–
STE		–		–		–	–
SPE	–	–	–	–	–	–	–
RCA		–		–		–	–
RD		–	–	–	–	–	–
RTE		–		–		–	–
DVM	–						
ID	–	–	–	–	–	–	–
A/D		–	–	–	–	–	–
CA	–	–	–	–	–	–	–
CSA							
	1500 psi	100% ΔP	800 psi	400°F	1200 psi	100°F	100°F

(1) % instrument span

(2) Corresponds to an accuracy of [± 0.7°F]+a,c

(3) Corresponds to an accuracy of [± 0.1°F]+a,c

TABLE 2

CALORIMETRIC RCS FLOW MEASUREMENT UNCERTAINTIES

+a,c

Component	Instrument Error	Flow Uncertainty
Feedwater Flow		
Venturi		
Thermal Expansion Coefficient		
Temperature		
Material		
Density		
Temperature		
Pressure		
Venturi ΔP		
Feedwater Enthalpy		
Temperature		
Pressure		
Steam Enthalpy		
Pressure		
Moisture		
Pump Heat		
Hot Leg Enthalpy		
T_H Instrumentation		
Streaming		
Pressure		
Cold leg Enthalpy		
T_C Instrumentation		
Pressure		

7612Q:1D/072784

TABLE 2 (Cont)

CALORIMETRIC RCS FLOW MEASUREMENT UNCERTAINTIES

[ ]+a,c

Primary Side Loop Flow Uncertainty = [ ]+a,c

Total RCS Flow Uncertainty for 4 loop plant = [ ]±a,c

TABLE 3

TOTAL FLOW MEASUREMENT UNCERTAINTIES

	Loops 4
	+a,c
Calorimetric uncertainty	[ ]
Total uncertainty 1 elbow tap/loop	±1.7% flow

FIGURE 2
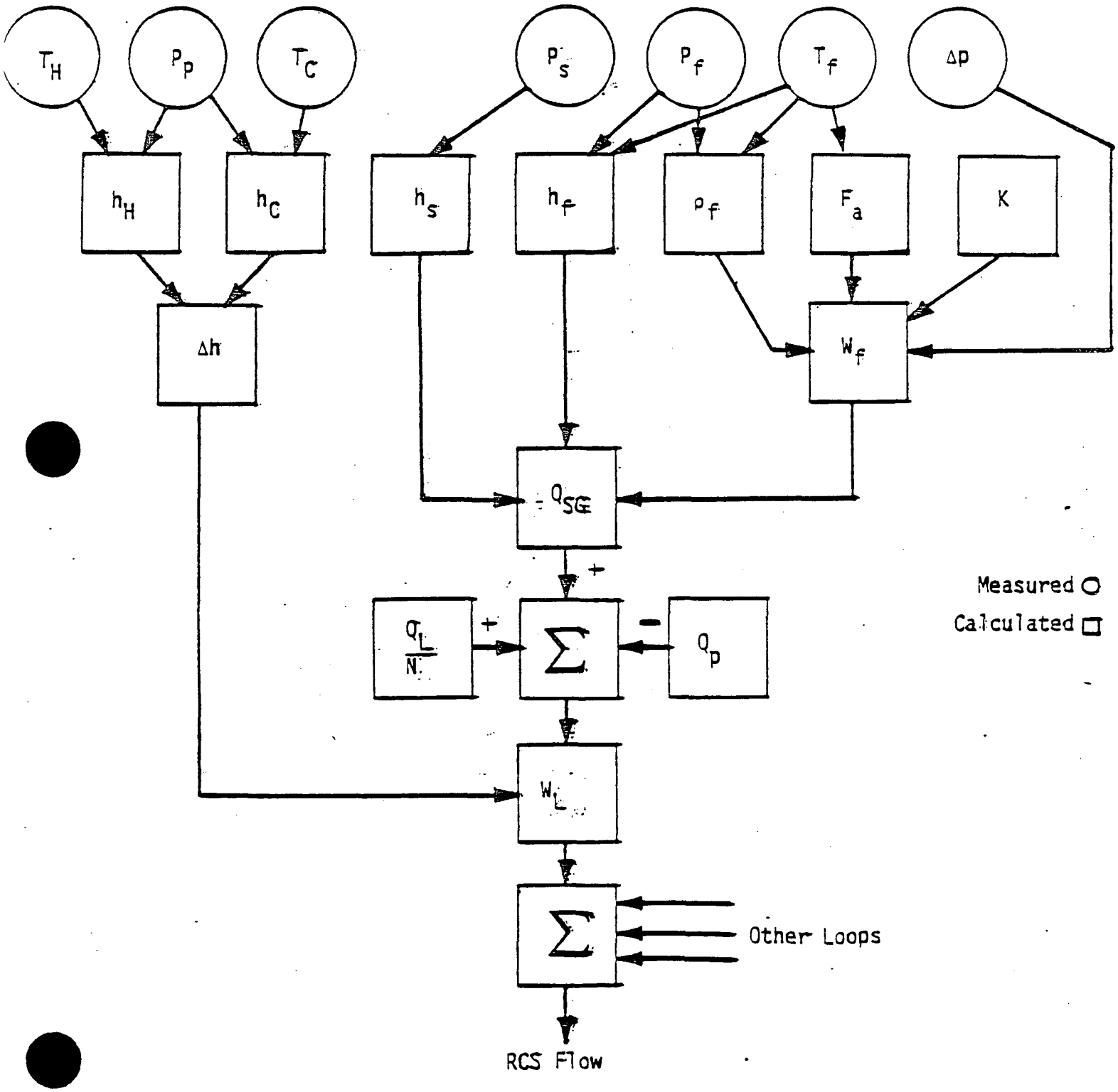
RCS FLOW CALORIMETRIC SCHEMATIC