HITACHI

GE Hitachi Nuclear Energy

James C. Kinsey
Vice President, ESBWR Licensing

PO Box 780 M/C A-55
Wilmington, NC 28402-0780
USA

T 910 675 5057
F 910 362 5057

MFN 07-687

Docket No. 52-010

December 21, 2007

U.S. Nuclear Regulatory Commission
Document Control Desk
Washington, D.C. 20555-0001

Subject: **Response to Portion of NRC Request for Additional Information Letter No. 103 Related to ESBWR Design Certification Application - Control Room Habitability Systems - RAI Numbers 6.4-11, 6.4-12, 6.4-15, 6.4-17, 9.4-29, 9.4-30, 9.4-36, 9.4-37, 9.4-49, 14.3-152, and 14.3-153**

Enclosure 1 contains the GE Hitachi Nuclear Energy (GEH) response to the subject NRC RAIs transmitted via the Reference 1 letter.

If you have any questions or require additional information, please contact me.

Sincerely,

James C. Kinsey

James C. Kinsey
Vice President, ESBWR Licensing

D068
NRO

Reference:

1. MFN 07-414, Letter from U.S. Nuclear Regulatory Commission to Robert E. Brown, *Request for Additional Information Letter No. 103 Related to ESBWR Design Certification Application*, July 23, 2007

Enclosure:

1. MFN 07-687 - Response to Portion of NRC Request for Additional Information Letter No. 103 Related to ESBWR Design Certification Application - Control Room Habitability Systems - RAI Numbers 6.4-11, 6.4-12, 6.4-15, 6.4-17, 9.4-29, 9.4-30, 9.4-36, 9.4-37, 9.4-49, 14.3-152, and 14.3-153

cc:	AE Cubbage	USNRC (with enclosures)
	GB Stramback	GEH/San Jose (with enclosures)
	RE Brown	GEH/Wilmington (with enclosures)
	eDRF	0000-0076-3942

Enclosure 1

MFN 07-687

Response to Portion of NRC Request for Additional Information Letter No. 103 Related to ESBWR Design Certification Application

Control Room Habitability Systems

RAI Numbers 6.4-11, 6.4-12, 6.4-15, 6.4-17, 9.4-29, 9.4-30, 9.4-36, 9.4-37, 9.4-49, 14.3-152, and 14.3-153

NRC RAI 6.4-11:

Refer to DCD, Tier 2, Revision 3, Figures 1.2-4 and 1.2-11 that show the location of the heating, ventilation and air conditioning (HVAC) supply louvers:

A. *Identify which of these louvers services the emergency filter unit (EFU) system and which services the normal HVAC supply to the control room habitability area (CRHA).*

B. *Are these control room ventilation inlets consistent with the values suggested in acceptance criterion no. 5A in Standard Review Plan (SRP) Section 6.4, Revision 3, March 2007?*:*

   (1) Are they separated from potential release points by 100 feet laterally and 50 feet vertically, and;

   (2) Are the actual minimum distances based on the dose analyses?

Include the information requested above in the DCD.

**Note: Same criteria as the 1981 and 1996 versions of SRP Section 6.4*

GEH Response:

A. DCD Tier 2, Figure 1.2-5 is the correct figure to be used for identifying these Control Building outside air intake louvers. Two separate Control Building intake louvers for the two emergency filter unit (EFU) trains are located on the east wall of the Control Building between column lines C1 and C2, and C4 and C5, respectively. Outside air intake louvers for the normal makeup air handling unit are located on the north wall of the Control Building at column line C5.

B. The control room ventilation inlet distances from potential release points were maximized to the extent possible. However, the separation distances in NUREG-0800, Standard Review Plan (SRP) for the Review of Safety Analysis Reports for Nuclear Power Plants, Section 6.4 were not always met. Not meeting these distances is acceptable because the dose analyses developed for the Control Room Habitability Area (CRHA) used actual plant layout of the Control Building intake louvers and potential release points as discussed in DCD Tier 2, Chapter 15. DCD Tier 2, Subsection 6.4.5 will be revised to provide a narrative description to document acceptable CRHA normal air supply and EFU inlet locations based on the dose analysis.

DCD Impact:

DCD Tier 2, Subsection 6.4.5 will be revised as shown in the attached markup.

generator. The requirements for the CRHAVS portable generator are described in Appendix 19A.

Upon a loss of preferred power or SBO, the initial ranges of temperature/relative humidity in the CRHA are 22.8 – 25.6°C (73 - 78°F) and 25% - 60% RH. During the first two hours of an SBO, most of the equipment in the MCR remains powered by the nonsafety-related battery supply. After two hours, the nonsafety-related batteries are exhausted, and only a small amount of safety-related equipment remains powered. During the first two hours the environmental conditions are maintained within the normal ranges listed above. This is accomplished via the continued operation of a CRHA recirculation AHU and chilled water pump powered from the same nonsafety-related battery supply that powers the non-safety MCR equipment. Chilled water from a chilled water thermal storage tank is utilized as the heat sink. The cooling function for this two hour period is not a safety function, if this cooling function is lost, the nonsafety-related equipment and their associated heat loads are automatically de-energized.

If power remains unavailable beyond two hours, the remaining CRHA safety-related equipment heat loads are dissipated passively to the CRHA heat sink. The CRHA heat sink limits the temperature rise to that listed in Table 6.4-1. The CRHA is passively cooled by conduction into the walls and ceiling. Sufficient thermal mass is provided in the walls and ceiling of the main control room to absorb the heat generated by the equipment, lights, and occupants.

These actions discussed above protect the main control room occupants from a potential radiation release and maintain the CRHA as a safe and habitable environment for continued operator occupancy.

6.4.5 Design Evaluations

System Safety Evaluation

Doses to main control room personnel are calculated for the accident scenario where the EFU provides filtered air to pressurize the CRHA. Doses are calculated for the following accident:

Loss Of Coolant Accident Table 15.4-9

The dose analyses are performed in accordance with the requirements of Regulatory Guides 1.194 and 1.196. For all events, the dose is within the dose acceptance limit of 5.0 rem TEDE. The details of the analytical assumptions for modeling the doses to the main control room personnel are delineated in Chapter 15. No radioactive material storage areas are located adjacent to the main control room pressure boundary. The control room ventilation inlet distances from potential release points are maximized to the extent possible. However, the separation distances in Standard Review Plan (SRP) Section 6.4 are not always met. Not meeting these distances is acceptable because the dose analyses developed for the CRHA used actual plant layout of the Control Building intake louvers and potential release points. As discussed and evaluated in Subsection 9.5.1, the use of noncombustible construction and heat and flame resistant materials throughout the plant reduces the likelihood of fire and consequential impact on the main control room atmosphere. Operation of the CRHAVS in the event of a fire is discussed in Subsection 9.4.1. The exhaust stacks of the onsite standby power diesel generators are located in excess of 48 m (157 ft) away from the fresh air intakes of the main control room. The onsite standby power system fuel oil storage tanks are located in excess

NRC RAI 6.4-12:

DCD, Tier 2, Revision 3, Section 6.4.1.1 states that control room habitability area (CRHA) requirements are satisfied without the need for individual breathing apparatus.

A. *Concerning acceptance criterion no. 5B in Standard Review Plan (SRP) Section 6.4, Revision 3, March 2007*, provide information in the DCD on the ability of the CRHA systems to protect during a toxic gas event without individual breathing apparatus. Specifically, if the CRHA is isolated in a toxic gas event, would the emergency filter unit (EFU) be operational and effective for all potential toxic gasses? Is there any event where self contained breathing apparatus would be required? If this is the case, how many are provided and where are they stored?*

B. *SRP 6.4, Section III, Item 2*, "Control Room Personnel Capacity" states that for a control room designed with complete isolation capability from the outside air, a 100,000 cubic foot CRHA would be satisfactory for 5 operators for 6 days from the build up of carbon dioxide. If the ESBWR CRHA had to be totally isolated, how long would the anticipated number of operators be protected in an 88,000 cubic foot control room from the build up of carbon dioxide?*

**Note: Same criteria as the 1981 and 1996 versions of SRP Section 6.4*

GEH Response:

A. As stated in DCD Tier 2, Table 2.0-1, "ESBWR Standard Plant Site Design Parameters," toxic gas concentrations at Main Control Room (MCR) air intakes are below toxicity limits. Therefore, the standard ESBWR Control Room Habitability Area (CRHA) design does not include design features for mitigating the consequences of a toxic gas event. COL Item 6.4-2-A as provided in DCD Tier 2, Section 6.4, Revision 4 requires the COL applicant to identify potential site-specific toxic or hazardous materials that may affect control room habitability. If this analysis determines that a hazard exists, supplemental information to the standard ESBWR design would be required in the COL application to: 1) add toxic gas monitoring instrumentation and revise logic required for CRHA isolation during toxic gas event; and 2) provide operator actions to don self-contained breathing apparatus (SCBA) and isolate CRHA upon indications of toxic gas event including response time requirements (CRHA Procedures and Training, COL Item 6.4-1-A). The standard ESBWR design includes provisions for SCBA storage in the CRHA and readily accessible to the operators in the event a COL applicant requires the use of SCBA based on site-specific toxic gas analysis.

B. As stated in response to Item A, the standard ESBWR CRHA design does not include design features for mitigating the consequences of a toxic gas event. Therefore, there is no standard ESBWR design requirement for isolating the CRHA without starting one of the emergency filter unit (EFU) trains. The response to RAI 9.4-29 provides additional information regarding the ability of a single EFU train to maintain CRHA habitability when the CRHA is otherwise isolated from normal makeup and exhaust paths. If a COL applicant identifies potential site-specific toxic or hazardous materials that may affect control room habitability, supplemental

information to the standard ESBWR design would be required in the COL application to address the possibility of requiring isolation of the CRHA for an extended period of time without normal or emergency air makeup.

DCD Impact:

No DCD changes will be made in response to this RAI.

NRC RAI 6.4-15:

DCD, Tier 2, Revision 3, Section 6.4.4 states that operation of the emergency habitability portion of the control room habitability area heating, ventilation and air conditioning (CRHAVS) system is automatically initiated by either of the following conditions

- *High radioactivity in the main control room supply air duct*
- *Extended loss of AC power*

Is the emergency habitability portion also automatically initiated and an EFU started by a toxic gas event? Please explain the duration that qualifies as an extended loss of AC power.

GEH Response:

As stated in DCD Tier 2, Table 2.0-1, the standard ESBWR design assumes that toxic gas concentrations at Main Control Room (MCR) air intakes are below toxicity limits. Therefore, there is no toxic gas event that requires initiating the emergency filter unit (EFU) trains.

The standard ESBWR Control Room Habitability Area (CRHA) design does not include Seismic Category I, Class 1E toxic gas monitoring instrumentation that would isolate the CRHA upon a toxic gas event. As stated in DCD Tier 2, Subsection 6.4.9, the COL applicants referencing the certified standard ESBWR design are responsible for the amount and location of possible sources of toxic chemicals in or near the unit (see response to RAI 6.4-12). However, the standard ESBWR design will accommodate the COL applicant design if necessary as a result of the site-specific toxic gas analysis. The standard ESBWR design includes provisions for SCBA storage in the event a COL applicant requires the use of SCBA based on site-specific toxic gas analysis.

The "extended loss of AC power" actuation of the EFU trains is described in DCD Tier 2, Section 6.4, Subsection 6.4.4, Subsection 6.4.5, and Subsection 9.4.1.1. The "extended loss of AC power" function is a time delay in the automatic start sequence for the EFU set long enough to minimize spurious actuations, but short enough to ensure that adequate breathable air quality is maintained in the CRHA prior to the start of the EFU. The actual duration of power loss will be determined during the detailed design phase based on these two criteria. After this delay, if either of the two standby onsite AC diesel generators fail to start and load, then it is considered an "extended loss of AC power" and one of the two EFU trains starts automatically.

DCD Impact:

No DCD changes will be made in response to this RAI.

NRC RAI 6.4-17:

DCD, Tier 2, Revision 3, Section 6.4.9 states that the COL applicant will provide the testing frequency for main control room (CRHA) inleakage testing. Please state in the DCD (1) that the test requirements and the testing frequency will be consistent with the guidance of Regulatory Guide 1.197 which establishes an in service test program and (2) that the test requirements are presented in Chapter 16, Technical Specifications, Section 5.5.12, Control Room Habitability Area (CRHA) Boundary Program.

GEH Response:

DCD Tier 2, Subsections 6.4.7 and 6.4.9 have been revised in Revision 4. Testing to demonstrate the integrity of the Control Room Habitability Area (CRHA) envelope is performed in accordance with Regulatory Guide 1.197 and ASTM E741. Testing associated with the CRHA is discussed in DCD Tier 2, Chapter 16, Subsection 5.5.12, Control Room Habitability Area (CRHA) Boundary Program. As described in the response to RAI 6.4-9, the standard ESBWR design has committed to Technical Specification Task Force (TSTF)-448, Revision 3, Control Room Habitability (see the response to RAI 16.2-54). DCD Tier 2, Chapter 16, Revision 4 Technical Specifications, Subsection 5.5.12, Control Room Habitability Area (CRHA) Boundary Program, Item d, describes this testing as follows:

> "Measurement, at designated locations, of the CRHA pressure relative to all external areas adjacent to the CRHA boundary during the pressurization mode of operation by one train of the [Control Room Habitability Area Heating, Air Conditioning, and Ventilation Subsystem] CRHAVS, operating at the flow rate required by the [Ventilation Filter Testing Program] VFTP, at a Frequency of 24 months on a STAGGERED TEST BASIS. The results shall be trended and used as part of the 24 month assessment of the CRHA boundary."

DCD Impact:

No DCD changes will be made in response to this RAI.

NRC RAI 9.4-29:

In DCD, Tier 2, Revision 3, Section 9.4.1, the Emergency Filter Unit (EFU) flow rate was established at 424 cfm. This was stated to be the minimum outdoor supply air required to maintain breathable air quality in the control room based on American Society of Heating, Refrigerating, and Air Conditioning Engineers (ASHRAE) Standard 62.

Please provide the assumptions used in this determination. Show how the control room compares to the type of facility selected from the ASHRAE 62 tables in terms of use, equipment, and air circulation features. Are there monitors that would warn operators of oxygen or carbon dioxide levels? Is there a capability to increase filtered outdoor air flow if more fresh air is needed. Considering the control room as an isolated facility with very minimal air circulation, what is the maximum carbon dioxide level and how does it compare with the toxic limits for carbon dioxide in the 72 hours after an accident?

GEH Response:

The Control Room Habitability Area (CRHA) is considered as an office setting. The area has desks, computers, offices and the activities mimic what would typically occur in an office setting. There is no specific category in ASHRAE 62 for industrial or power plant control rooms. Therefore, the amount of outside air used in the ESBWR CRHA is 9.5 l/s/person (20 cfm/person) for up to 21 people (See DCD Tier 2, Table 9.4-1). Establishing emergency filter unit (EFU) flow rate at 424 cfm is consistent with ASHRAE Standard 62 to maintain breathable air quality.

There are no monitors that would warn operators of oxygen or carbon dioxide levels. The 200 l/s (424 cfm) is supplied by the safety-related EFU and is sufficient to insure a safe environment.

After an accident, the CRHA envelope air outlet connections are isolated to ensure control room pressurization with a minimum flow of 200 l/s (424 cfm) supplied by the EFU. In order to ensure this minimum flow rate, a controlled leak path from the CRHA envelope will be provided. This leak path will maintain a 31 Pa (1/8" wg) positive pressure and the minimum flow rate. Locating the leak path under the raised floor of the control room removed from the air supply location will provide a flow path for the incoming filtered fresh air to assure that the operator breathable zone is refreshed, and will maintain carbon dioxide levels well below the 5000 ppm threshold value limit. This leak path will assure carbon dioxide mixing and meets the intent of ASHRAE 62. DCD Tier 2, Figure 6.4-1, Subsection 9.4.1.2, Figure 9.4-1, and Figure 9.4-2, and DCD Tier 1, Figure 2.16.2-4 will be revised to include this controlled leakage path design feature.

DCD Impact:

DCD Tier 2, Figure 6.4-1, Subsection 9.4.1.2, Figure 9.4-1, and Figure 9.4-2, and DCD Tier 1, Figure 2.16.2-4 will be revised as shown in the attached markup.

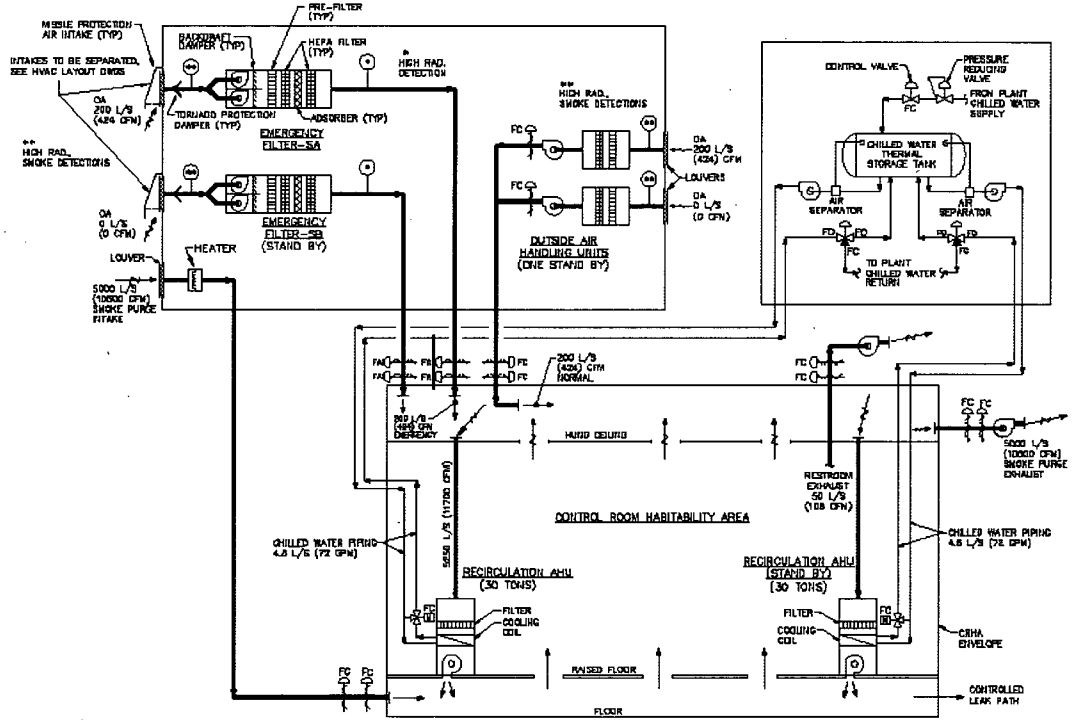

Figure 6.4-1. CRHAVS Schematic Diagram

9.4.1.2 System Description

Summary Description

The CBVS subsystems, the CRHAVS and the CBGAVS, are recirculating ventilation systems that provide filtered, conditioned air to serve all areas of the Control Building. The EFUs provide breathing air and pressurization to the CRHA when the CRHA envelope is radiologically isolated. The CBVS maintains space design temperatures and air quality. Outside air is normally supplied to augment the return air to maintain the Control Building under a slightly positive pressure. The CBGAVS return/exhaust fans normally direct most of the system airflow back to the system return flow with a portion of the flow exhausted to the atmosphere. The CBVS provides a controlled environment for personnel safety and comfort, and for the proper operation and integrity of equipment located in the Control Building.

CBVS equipment, including fans, AHUs, EFUs, and the CRHA are located within the Control Building Seismic Category I structural areas.

Detailed System Description

Figures 9.4-1, 9.4-2, 9.4-3 and 9.4-4 show the simplified system diagrams for the CRHAVS and the CBGAVS Set A and B, respectively. Table 9.4-2 lists the major equipment that comprises the CBVS. The layout of the CRHA envelope is shown in Figure 1.2-3.

The CRHA envelope includes the following areas:

- Main Control Room (Room 3275)
- Shift Supervisor Office (Room 3272)
- Shift Supervisor Conference Room (Room 3273)
- Operator's Area (Room 3270)
- Shift Technical Advisor Office (Room 3271)
- Main Control Room Storage Room (Room 3204)
- Electrical Panel Board Room (Room 3205)
- Restroom A (Room 3201)
- Restroom B (Room 3202)

These areas constitute the operations control area, which can be isolated and remain habitable for 72 hours, if required, following the occurrence of a LOCA, Station Blackout (SBO) or a high radiation condition with or without AC power. Also, potential sources of danger such as steam lines, pressurized piping, pressure vessels, CO_2 fire fighting containers, etc. are located outside of the CRHA.

The CRHAVS consists of two trains. Each train consists of:

- One 100% capacity Recirculation AHU;

- One 100% capacity outside air supply fan;
- One 100% capacity safety-related EFU;
- One 100% capacity safety-related EFU fan; and
- Redundant set of safety-related CRHA isolation dampers.

The CRHAVS is configured as a recirculation system that contains the entire supply and return AHU air flow inside the CRHA, and incorporates a common supply duct for introducing outside air to the CRHA. The normal and emergency (EFU) filter unit outside air intake flows are adjusted as required to maintain a minimum flow of 200 l/s (424 cfm) and, in conjunction with controlled leak path, maintain a 31 Pa (1/8" wg) minimum positive pressure in the CRHA.

The intake design and location are in accordance with Regulatory Guide 1.194. Intake design, location and control also include considerations that minimize the introduction of radiological material, toxic gases, hazardous chemicals, smoke, dust and other foreign material. Ductwork, housings, access openings, etc. are constructed in such a manner as to minimize inleakage of potentially contaminated air into the CRHAVS air stream.

During normal operation, air is conditioned and distributed by a Recirculation AHU and particulates are removed from the air by medium efficiency filters. Heat is transferred between the air and the heating elements and cooling coils inside the Recirculation AHU. Moisture is added to the air stream, if required, to maintain minimum humidity levels in the CRHA by the automatically controlled humidifier. The heating and cooling processes inherently remove moisture from the air stream and maintain the humidity below the maximum specified level. The Recirculation AHU distributes conditioned air beneath the CRHA raised floor to the CRHA rooms via registers in the raised floor. The Recirculation AHU intake is ducted to a location above the suspended ceiling and return air is returned to the Recirculation AHU via registers in the suspended ceiling.

Each EFU consists of a medium efficiency filter (40% minimum), a high efficiency particulate air (HEPA) filter (99.97% DOP minimum), a carbon adsorption filter (99% credited efficiency), and a post-filter downstream of the carbon filter (95% DOP minimum). The EFUs operate only during a radiological emergency or an SBO and are able to function while powered from an offsite AC source, an onsite AC source, or an onsite safety-related DC source. The EFUs are monitored by instrumentation that detects a loss of airflow as well as radiation downstream of the EFU filters. Upon such detection, the operating EFU is isolated and the standby EFU is automatically placed in service.

Exhaust air from the restroom is ducted to the exhaust fan and exhausted to the outside atmosphere.

The CRHA Recirculation AHUs provide cooling to the CRHA whenever offsite or onsite AC power is available. Furthermore, a Recirculation AHU fan and a chilled water recirculation pump are battery powered during the first two hours of an SBO from the nonsafety-related battery supply. Cooling of the CRHA for the two hour duration during which the nonsafety-related heat loads in the CRHA are powered from the nonsafety-related battery supply is achieved via circulation of chilled water from the Chilled Water

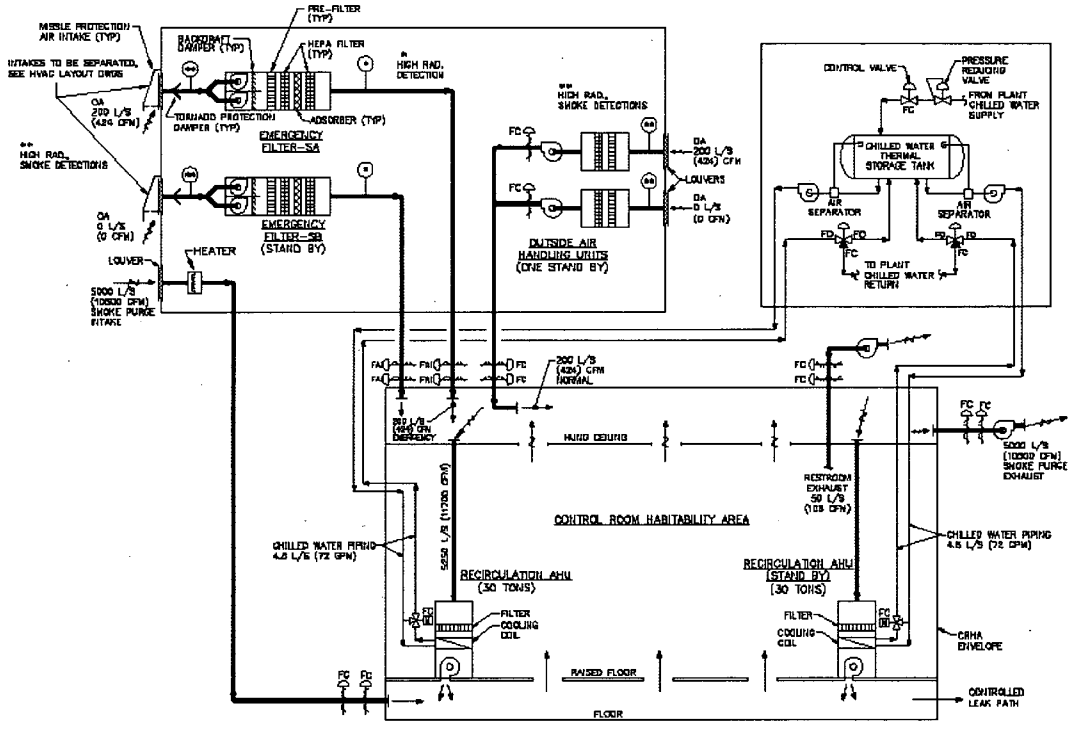

Figure 9.4-1. CRHAVS Simplified System Diagram

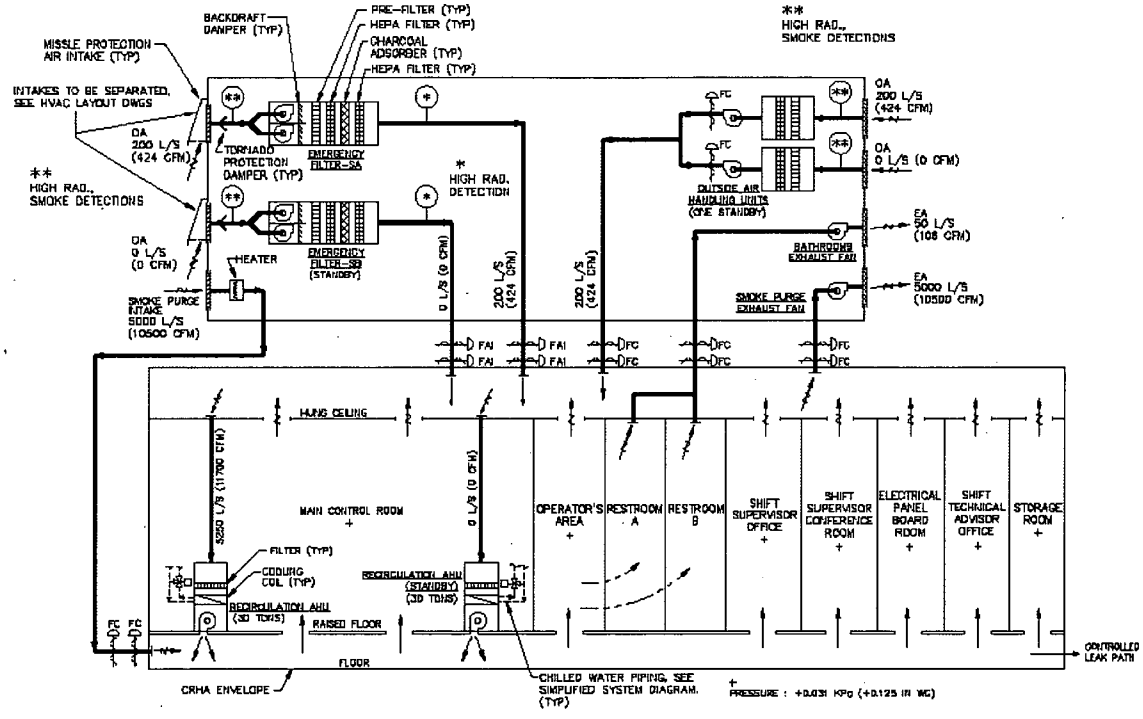

Figure 9.4-2. CRHAVS Air Flow Diagram

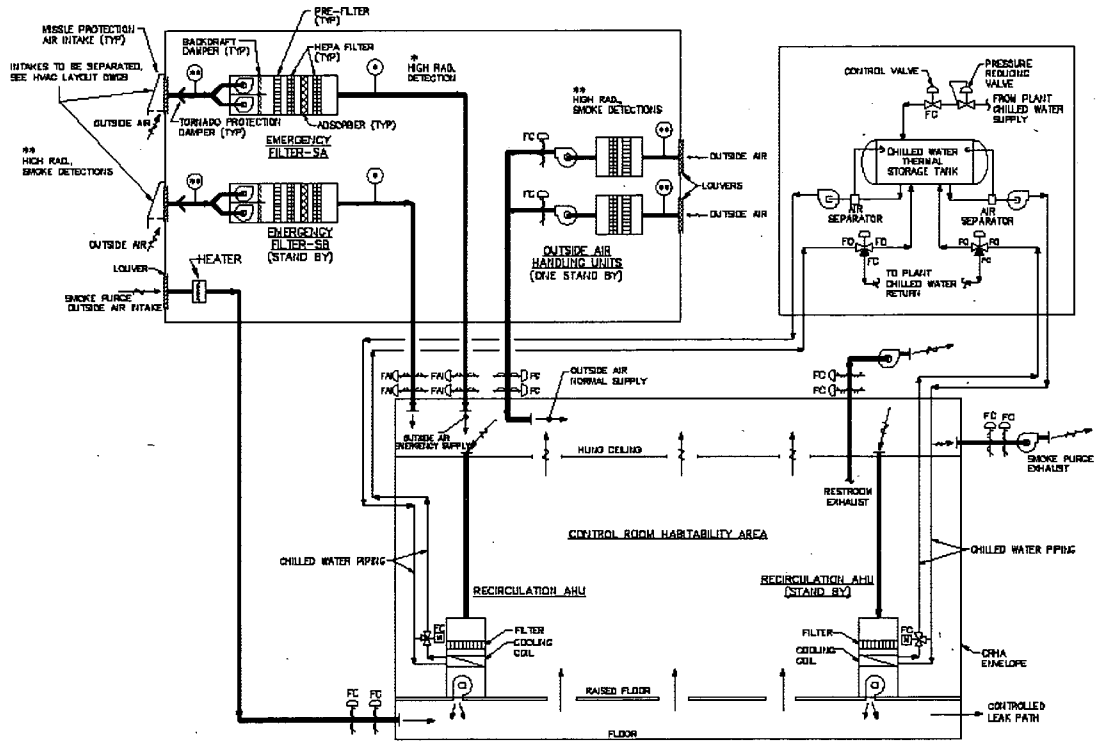

Figure 2.16.2-4. CRHAVS Simplified System Diagram

NRC RAI 9.4-30:

In DCD, Tier 2, Revision 3, Section 9.4.1, Figure 9.4-1 the EFU discharges its flow into the plenum above the false ceiling in the control room. For the first two hours an air handling unit (AHU) operates off the non-safety battery power to facilitate removal of non-safety heat loads. The inference is that after two hours the recirculation AHU would be shut down. As such, there would be no recirculation from the plenum above the false ceiling to the plenum below the false floor for distribution through the control room. Breathable air, especially if it is warm air from the outside, may not dissipate to the operator breathable zone and the operator could experience reduced oxygen. Please discuss the features which provide assurance that the air in the operator breathable zone would be adequately refreshed in the first 72 hours.

GEH Response:

During the post accident period up to 72 hours, breathing air is supplied into the plenum above the false ceiling with the Control Room Habitability Area (CRHA) envelope isolated at a minimum flow rate of 200 l/s (424 cfm). During that time period, no recirculation air handling unit (AHU) is in service to assist air circulation. In order to ensure this minimum flow rate, a controlled leak path from the CRHA envelope will be introduced. This leak path will maintain a 31 Pa (1/8" wg) positive pressure and the minimum flow rate. Locating the leak path under the raised floor of the control room removed from the air supply location will provide a flow path for the incoming filtered fresh air to assure that the operator breathable zone is refreshed. DCD Tier 2, Figure 6.4-1, Subsection 9.4.1.2, Figure 9.4-1, and Figure 9.4-2, and DCD Tier 1, Figure 2.16.2-4 will be revised to include this controlled leakage path design feature.

DCD Impact:

DCD Tier 2, Figure 6.4-1, Subsection 9.4.1.2, Figure 9.4-1, and Figure 9.4-2, and DCD Tier 1, Figure 2.16.2-4 will be revised as shown in the markup attached to the response to RAI 9.4-29.

NRC RAI 9.4-36:

The staff noted that in DCD, Tier 2, Revision 3, Section 5.5.13.c that the laboratory test of the charcoal absorber shows a penetration value of less than 1 percent. In Section 9.4.1, the credit given the carbon adsorption filter in the emergency filter unit (EFU) is 99 percent credited efficiency (equivalent to 1 percent penetration). Regulatory Guide (RG) 1.52 requires a safety factor of 2 for the laboratory test criteria with respect to the efficiency credited for filter operation. This would lead to a laboratory test criteria of less than 0.5 percent penetration.

Explain the basis for the laboratory test criteria used to support the 99 percent credited efficiency and provide the thickness of the charcoal bed in the DCD.

GEH Response:

The inconsistency described above between DCD Tier 2 and regulatory requirements was corrected in DCD Tier 2, Revision 4. DCD Tier 2, Chapter 16, Revision 4 Subsection 5.5.13.c was revised to include a laboratory test acceptance criteria of less than 0.5 percent penetration as required by RG 1.52. The thickness of the charcoal bed will also be ≥ 4 inches as required by RG 1.52.

DCD Impact:

No DCD changes will be made in response to this RAI.

NRC RAI 9.4-37:

In DCD, Tier 2, Revision 3, Section 9.4.1, it was stated in the control room habitability HVAC system (CRHAVS) description that "The portions of the CRHAVS which penetrate the control room habitability area (CRHA) envelope are non-safety-related and designed as Seismic Category I to provide isolation of the CRHA envelope from the outside and surrounding areas in the event of a design basis accident (DBA)."

Please clarify if the items should be classified as safety-related since they provide isolation of the CRHA envelope from the outside and surrounding areas in the event of a DBA and make the appropriate change to the DCD.

GEH Response:

All components that provide for isolation of the Control Room Habitability Area (CRHA) envelope are safety-related. DCD Tier 2, Revision 4, Subsection 9.4.1 clarifies that the following components are safety-related and Seismic Category I:

- CRHA Boundary envelope including structures, doors, and components;
- Emergency filter units (EFUs) including high efficiency particulate air (HEPA) and carbon filters and related system components;
- Ductwork from the CRHA boundary envelope up to and including the CRHA isolation dampers; and
- Tornado dampers provided for the EFU air intake openings, designed to withstand the full negative pressure drop.

DCD Impact:

No DCD changes will be made in response to this RAI.

NRC RAI 9.4-49:

In DCD, Revision 3, Tier 2, Section 9.4.1 and as shown on Figure 9.4.1, the normal outdoor air supply for the control room habitability area HVAC system (CRHAVS) is 424 cfm. With the leak tight structure, the CR is essentially a confined entry vessel and is significantly different from the structures evaluated in ASHRAE 62. The CR operates at a positive pressure and depends on cracks, crevices, and door seals leakage to remove most of the surplus air that develops as a result of the normal outside air supply. The staff is concerned that the air which leaves the ESBWR control room might not carry with it the contaminants, odors, fumes, etc., that would be carried out by a direct exhaust equivalent to the outside air being added.

Provide additional information on the applicability of the ASHRAE Standard 62 on a tightly closed facility such as the ESBWR control room and determine if there are long term indoor air quality effects on habitability that need to be addressed.

GEH Response:

As stated in DCD Tier 2, Revision 4, Subsection 6.4.7, preoperational testing of the Control Room Habitability Area Heating, Air Conditioning, and Ventilation Subsystem (CRHAVS) is performed to verify that the minimum air flow rate of 200 l/s (424 cfm) is sufficient to maintain the required pressurization of the main control room envelope with respect to adjacent areas. After an accident, the Control Room Habitability Area (CRHA) envelope air outlet connections are isolated to ensure control room pressurization. The minimum emergency filter unit (EFU) flow rate is stated in DCD Tier 2, Revision 4, Table 9.4-1, and tested according to the Ventilation Filter Testing Program (VFTP) as specified in DCD Tier 2, Revision 4, Chapter 16, Subsection 5.5.13. A controlled leak path from the CRHA will maintain a 31 Pa (1/8" wg) positive pressure and the minimum flow rate. Locating the leak path under the raised floor of the control room removed from the air supply location will provide a flow path for the outgoing air to assure that the operator breathable zone is maintained. The carbon dioxide and odors produced in the CRHA envelope are exhausted outside with the air that leaves the CRHA envelope. DCD Tier 2, Figure 6.4-1, Subsection 9.4.1.2, Figure 9.4-1, and Figure 9.4-2, and DCD Tier 1, Figure 2.16.2-4 will be revised to include this controlled leakage path design feature.

DCD Impact:

DCD Tier 2, Figure 6.4-1, Subsection 9.4.1.2, Figure 9.4-1, and Figure 9.4-2, and DCD Tier 1, Figure 2.16.2-4 will be revised as shown in the markup attached to the response to RAI 9.4-29.

NRC RAI 14.3-152:

DCD, Tier 2, Revision 3, Section 6.4.3 discusses the features of the design that provide leak tightness of the control room habitability area (CRHA). Section 6.4.7 discusses preoperational test requirements.

Provide an ITAAC in the DCD, Tier 1 to verify that the leak tightness of the CRHA has been achieved by testing in accordance with the guidance in Regulatory Guide 1.197. This testing is important in that it serves as the basis for unfiltered in-leakage assumed in the design basis analyses of Chapter 15.

GEH Response:

DCD Tier 1, Revision 4, Table 2.16.2-6 added Inspections, Tests, Analyses and Acceptance Criteria (ITAAC) 5.b for confirming that Control Room Habitability Area (CRHA) in-leakage does not exceed the unfiltered in-leakage assumed by control room operator dose analysis. The method of testing (ASTM E741) included in Table 2.16.2-6 is consistent with Regulatory Guide 1.197 integrated test requirements.

DCD Impact:

No DCD changes will be made in response to this RAI.

NRC RAI 14.3-153:

In DCD, Tier 2, Revision 3, Section 9.4.1, the applicant stated that the Control Room Habitability Area HVAC Subsystem (CRHAVS) would maintain the control room at a positive pressure of 1/8 inches e.g., to minimize air in leakage. DCD, Tier 2, Revision 3, Chapter 15, Table 15.4-5 states that the assumption on control room unfiltered in leakage is 1.13E-02 cubic meters per minute (0.3 cfm).

Typically, a value of 10 cfm as a minimum is assumed for access and egress. In addition, results of tracer gas testing on positive pressure control rooms have shown additional leakage in many cases. Inefficiency of the emergency filter unit (EFU) filters and bypass penetration could add to unfiltered in leakage.

A. *Please confirm the unfiltered in leakage value that will be used in the design basis analyses and be maintained by control room pressurization in the accident mode.*

B. *Provide an ITAAC to verify that the unfiltered inleakage is no greater than the value in A.*

GEH Response:

A. The unfiltered in-leakage assumption of 12 cfm used in NEDE-33279P, Revision 1, Licensing Topical Report - ESBWR Containment Fission Product Removal Evaluation Model, bounds the value of 10 cfm typically assumed for access and egress. DCD Tier 2, Table 15.4-5 will be revised as shown in the responses to RAIs 15.4-6, 15.4-7, 15.4-8, 15.4-17, 15.4-22, and 15.4-24 to address the assumptions of NEDE-33279P including the unfiltered in-leakage assumption of 12 cfm.

B. DCD Tier 1 Revision 4, Table 2.16.2-6 provides an Inspections, Tests, Analyses and Acceptance Criteria (ITAAC) 5.b for the following design commitment: "The in-leakage does not exceed the unfiltered in-leakage assumed by control room operator dose analysis". Tracer gas testing in accordance with ASTM E741 will be performed to measure the unfiltered in-leakage into the Control Room Habitability Area (CRHA) with either one of the two emergency filter unit (EFU) trains operating.

DCD Impact:

No DCD changes will be made in response to this RAI.