TENNESSEE VALLEY AUTHORITY
CHATTANOOGA, TENNESSEE 37401

5N 157B Lookout Place

NOV 01 1990

U.S. Nuclear Regulatory Commission
ATTN: Document Control Desk
Washington, D.C. 20555

Gentlemen:

In the Matter of the Application of) Docket Nos. 50-390
Tennessee Valley Authority)

WATTS BAR NUCLEAR PLANT (WBN) UNIT 1 - NUREG-0737, SUPPLEMENT 1, ITEM I.D.2 - SAFETY PARAMETER DISPLAY SYSTEM (SPDS) - RESPONSE TO NRC AUDIT CONCERNS (TAC NO. 73723)

This letter provides TVA's approach to the eight issues identified in NRC's audit exit meeting on the subject system. The exit meeting was held on August 23, 1990 at WBN. TVA committed in that exit meeting to provide the approach to those concerns by October 31, 1990.

Enclosure 1 provides a discussion of each of NRC's concerns. Items 3 and 5 supersede previously submitted letters concerning the SPDS dated June 25, 1985 (response to NRC Question 620.01) and March 27, 1985 (response to NRC Question 420.01, Appendix D), respectively. Other responses provided by those letters remain applicable.

Implementation of the SPDS is in accordance with TVA's commitments for WBN in response to Generic Letter 89-06 dated July 11, 1989.

Enclosure 2 provides a list of commitments identified in this letter. If you have any questions, please telephone M. C. Bryan at (615) 365-8819.

Very truly yours,

TENNESSEE VALLEY AUTHORITY

E. G. Wallace, Manager
Nuclear Licensing and
Regulatory Affairs

9011080134 901101
PDR ADOCK 05000390
A PDC

Enclosures
cc: See page 2

A046
1/1

U.S. Nuclear Regulatory Commission

NOV 01 1990

cc (Enclosures):

Ms. S. C. Black, Deputy Director
Project Directorate II-4
U.S. Nuclear Regulatory Commission
One White Flint, North
11555 Rockville Pike
Rockville, Maryland 20852

NRC Resident Inspector
Watts Bar Nuclear Plant
P.O. Box 700
Spring City, Tennessee 37381

Mr. P. S. Tam, Senior Project Manager
U.S. Nuclear Regulatory Commission
One White Flint, North
11555 Rockville Pike
Rockville, Maryland 20852

Mr. B. A. Wilson, Project Chief
U.S. Nuclear Regulatory Commission
Region II
101 Marietta Street, NW, Suite 2900
Atlanta, Georgia 30323

ENCLOSURE 1
WATTS BAR NUCLEAR PLANT (WBN)
RESPONSE TO NRC'S CONCERNS FROM AUGUST 23, 1990 AUDIT
SAFETY PARAMETER DISPLAY SYSTEM (SPDS)

The following is TVA's approach to addressing NRC's request for documented information concerning the eight issues that resulted from the subject audit. The information presented below has been formatted to correspond with the related Standard Review Plan (NUREG-0800) guidelines as headings for ease of review. The design of SPDS is not finalized, however, it is anticipated that this approach will not change.

1. CONCISENESS OF DISPLAY

NRC Comment: WBN SPDS meets this guideline, no additional information is required.

2. CONVENIENT TO USER

NRC Comment: WBN is requested to document primary user of the SPDS during emergency conditions.

TVA Response: As noted during the audit, the primary users of the SPDS during an accident are the Assistant Shift Operating Supervisor (ASOS, a licensed Senior Reactor Operator (SRO) responsible for operations associated with that unit) and the Shift Technical Advisor (STA), who will both normally be located at the unit operator work stations where there are two SPDS terminals (see Appendix A). Although both of these terminals are expected to be operational, only one is required to be operational in order for the SPDS to be considered available.

3. CONTINUOUS DISPLAY OF CRITICAL PLANT VARIABLES

NRC Comment: Confirm TVA's commitment to not overwrite (e.g., with temporary error or prompt messages) the SPDS target boxes (located at the bottom left corner of the displays) and provide documentation of TVA's plans to continuously display the status of all five of the critical safety functions.

TVA Response: The following response supersedes TVA's letter dated June 25, 1985 concerning NRC Question 620.01 (Human Factors Program). To ensure that the status boxes are continuously displayed the WBN SPDS will not be designed with the capability to overwrite any of the status boxes (located at the bottom left corner of the displays) under any conditions. The WBN cathode ray tube (CRT) SPDS displays are shown in Appendix B. The five critical safety functions will continuously display by virtue of the containment isolation status panels (CISPs) that monitor the position of the containment

isolation valves that have automatic actuation from a Phase A, Phase B or containment vent isolation signal, the six status tree boxes that alarm (change color and flash) in accordance with the Emergency Operating Instructions (EOI) status tree alarms, and the single "SPDS" status box that alarms (change color and flash) when any of the other six status tree boxes alarm or when any of the other critical parameters (displayed on the plant status screen [2PS1]) go into the alarm state (i.e., steam generator (SG) blowdown radiation, main steamline [SG discharge] radiation, effluent radiation levels, and residual heat removal [RHR] flow). Containment hydrogen also displays on 2PS1, but high hydrogen concentration does not result in an SPDS (status box) alarm.

The seven status boxes ("SPDS", "S", "C", "H", "P", "Z", and "I") will be continuously displayed in the same location on the various displays in the system, including non-SPDS displays.

4. RELIABILITY

NRC Comment: Document the program to ensure that SPDS availability is maintained at 99% or greater.

TVA Response: TVA notes that a 99% availability is not an SPDS requirement, but is a design goal for the WBN SPDS. The proposed TVA program to document the availability of the SPDS, including the identification of causes of unavailability and recommended corrective actions, is as follows:

The three primary potential causes of SPDS unreliability are: hardware, software, and sensor input readings. With respect to computer hardware (data acquisition, computer, processor, memory, and peripherals and display equipment), WBN will generate a detailed Instrument Maintenance Instruction (IMI) for calibration, hardware operation and overall maintenance. The IMI will be implemented by qualified maintenance personnel on a periodic basis, or as required for system repair, or as needed by the Preventative Maintenance (PM) Procedure. WBN will upgrade the existing PM to encompass the upgraded system.

Regarding software reliability, the initial SPDS software and changes made to it will undergo formal verification and validation to ensure that requirements are accurately specified, implemented, and tested. Software changes will be documented, approved, and controlled by qualified personnel and procedures.

ENCLOSURE 1

RESPONSE TO AUDIT OF WBN'S SPDS - AUGUST 22 AND 23, 1990

In order to minimize the possibility of bad sensor inputs to the SPDS and/or inaccurate SPDS display of sensor inputs, routine instrument loop calibration of sensors that provide input to the SPDS will include verification that the SPDS-displayed values are correct. WBN's instrument surveillance instructions (SIs) will incorporate these verifications. When a problem with SPDS is detected it will be resolved by the maintenance request (MR) process. An MR can be initiated by any individual but will be primarily issued by personnel performing SIs, control room operators discovering system malfunctions, or computer maintenance personnel documenting required maintenance. The cause and corrective action taken to resolve the problem will be documented through the implementation of the IMI, and if it is determined that the SPDS is unavailable, the duration and unavailability will be documented. In addition, the instruction will generate a periodic calculation of system unavailability and determination of causes will be performed to identify trends and generic corrective actions to be taken.

5. ELECTRICAL ISOLATION FROM SAFETY SYSTEMS

NRC Comment: TVA is to provide documentation concerning this criteria.

TVA Response: Appendix C provides the requested information.

6. HUMAN FACTORS ENGINEERING FEATURES

NRC Comment: TVA is to document its process for ensuring that adequate operator review of and input into the SPDS design occurs. In addition, the following specific items were noted:

- Setpoints need to be verified against control room annunciators,
- Status tree logic flows need to be verified against EOI hard copies and in consideration of sensor characteristics (e.g., H_2 analyzers),
- Verify display formats (e.g., 2CS1),
- Dark blue is very difficult to distinguish from the black display background,
- Consideration should be given to a more representative positioning of the page up, down right, and left keys.

TVA Response: WBN has been obtaining regular control room operator input to and review of the SPDS design (display formats, content, logic flow, setpoints, etc.) as part of the SPDS User's Group effort. This effort is ongoing and

will be supplemented by conducting reviews and interviews with the operators of the SPDS (with documented comments) at the WBN simulator prior to SPDS acceptance. In addition, a form for recording SPDS comments by operations personnel will be developed and used as the vehicle for ensuring that future operator feedback is considered. Changes to the EOI's may effect the SPDS, therefore, the EOI writer's guide will include reference to the need to verify the SPDS as part of any EOI revision. SPDS setpoints, logic flows, and display formats will be verified against control room instrumentation, operating procedures, and system/sensor characteristics, as applicable. TVA will utilize lighter colors (cyan and white) to provide greater contrast between the previous blue (text, piping, and poor/bad data) and the black display background. TVA has rearranged the SPDS keyboard as shown in Appendix D.

7. PARAMETER SELECTION

NRC Comment: The WBN SPDS meets this criteria. TVA should document the basis for the deletion of the dynamic head range reactor vessel level indication from the list of SPDS parameters.

TVA Response: The WBN SPDS receives input from the Westinghouse Inadequate Core Cooling Monitor (ICCM) which includes a single reactor vessel level value. This value is selected by the ICCM based upon plant conditions (e.g., number of reactor coolant pumps running), thus there is no need for a separate indication of the dynamic head range vessel level.

8. OPERATOR TRAINING

NRC Comment: TVA should document the operator training program to be conducted for the WBN SPDS.

TVA Response: WBN SPDS operator training will consist of the following:

- Hot license and requalification training of control room operators to include formal classroom and hands-on (simulator) training in the SPDS design basis, access to, use and interpretation of SPDS displays and data, and integration of the SPDS into control room operations.

- Specific, one-time training of control room operators in plant transient identification and accident mitigation both with and without the SPDS available.

As committed in TVA's response to Generic Letter 89-06, initial training of plant operations personnel (performing license duties) in SPDS use will occur before WBN unit 1 fuel load.

APPENDIX A

WBN SPDS CONTROL ROOM LAYOUT

Notes to attached figure:

1. During normal operation, lead and balance of plant (BOP) operators (both licensed reactor operators) have SPDS data provided at CRT's shown as "SPDS Turret #2" and "SPDS Turret #1", respectively. A single keyboard is located on the desktop between these two swivel-mounted CRT's that are labeled so that the user can easily determine which CRT is being controlled from the keyboard. The ASOS also has SPDS data provided at "SPDS CRT #3," which includes its own keyboard.

2. During an emergency, the lead and BOP operators are standing at the control boards. During this situation, the ASOS moves to the lead operator work area (SPDS Turret #2) to serve as the procedure reader and the STA to the BOP operators work area (SPDS Turret #1) to assist and consult.

3. The CISPs that monitor the position of the containment isolation valves that have automatic actuation from a Phase A, Phase B, or containment vent isolation signal is located as shown and is high enough to be visible from the three SPDS CRT locations.

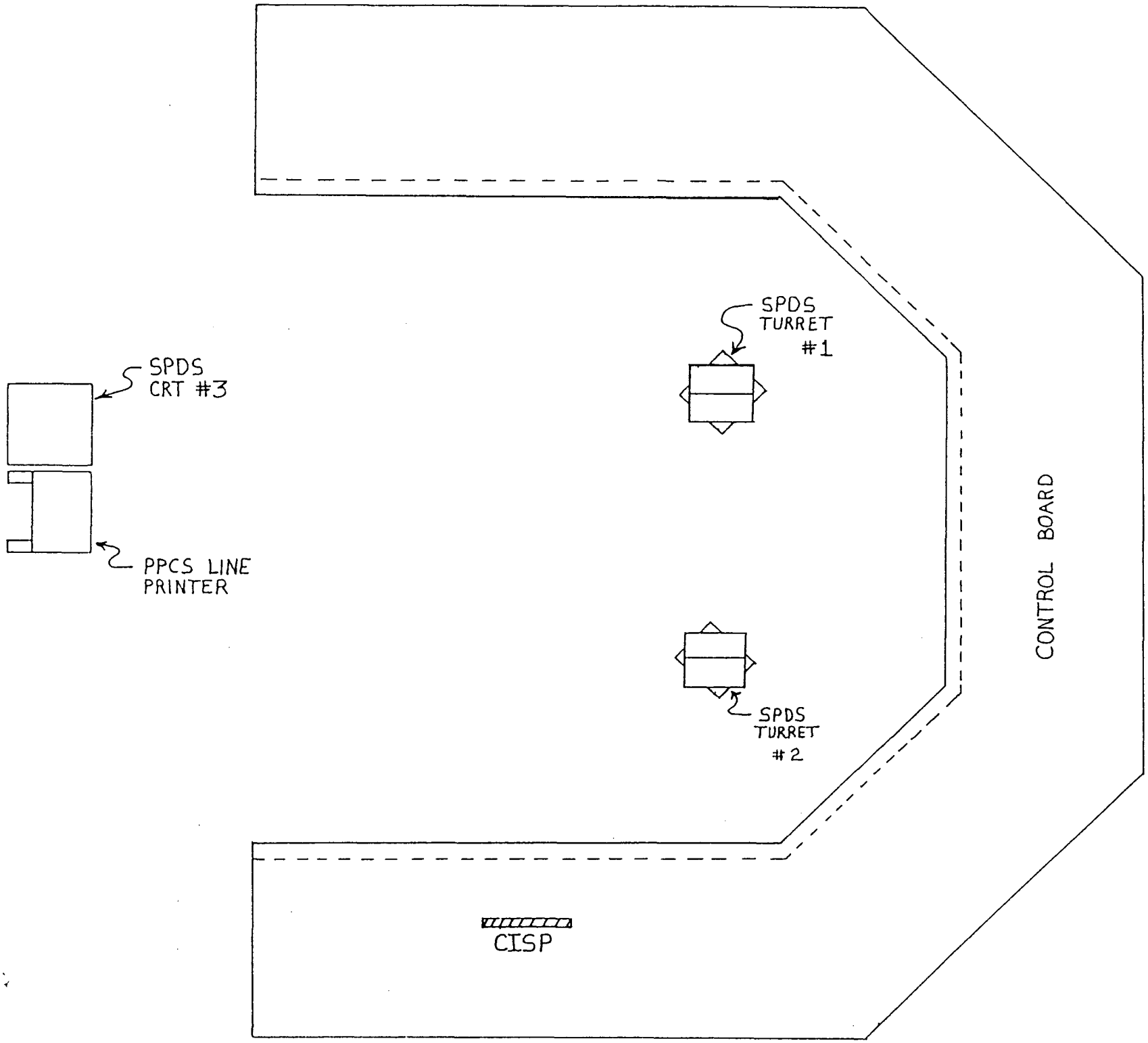
SPDS
CRT #3
PPCS LINE
PRINTER
SPDS
TURRET
#1
SPDS
TURRET
#2
CONTROL BOARD
CISP

APPENDIX B

WBN SPDS DISPLAYS

Notes to attached figures:

1. The attached figure shows the hierarchy of SPDS displays.

2. Each of the six status trees correspond exactly to the hardcopy EOI status trees.

3. The color of each of the six SPDS status boxes (lower left of each display) corresponds to the terminus color of its corresponding EOI status tree, and flashes when in alarm.

4. The "SPDS" status box (lowest left corner of each display) is normally hollow green (no alarm) and changes to a solid color and flashes in accordance with the highest level status tree alarm (red-highest, orange-middle, yellow-lowest), or if no status tree alarm exists, upon alarm of any of the following parameters (turns yellow):

   - SG blowdown radiation
   - Main steamline (SG discharge) radiation
   - Effluent radiation
   - RHR

5. The second level of SPDS displays are parameter display pages corresponding to each of the six SPDS status tree displays.

6. There is a single third level SPDS display (4FRP) which displays the cold overpressure limit and limit A curves in support of the pressurizer thermal shock (PTS) status tree.

SPDS DISPLAY HEIRARCHY

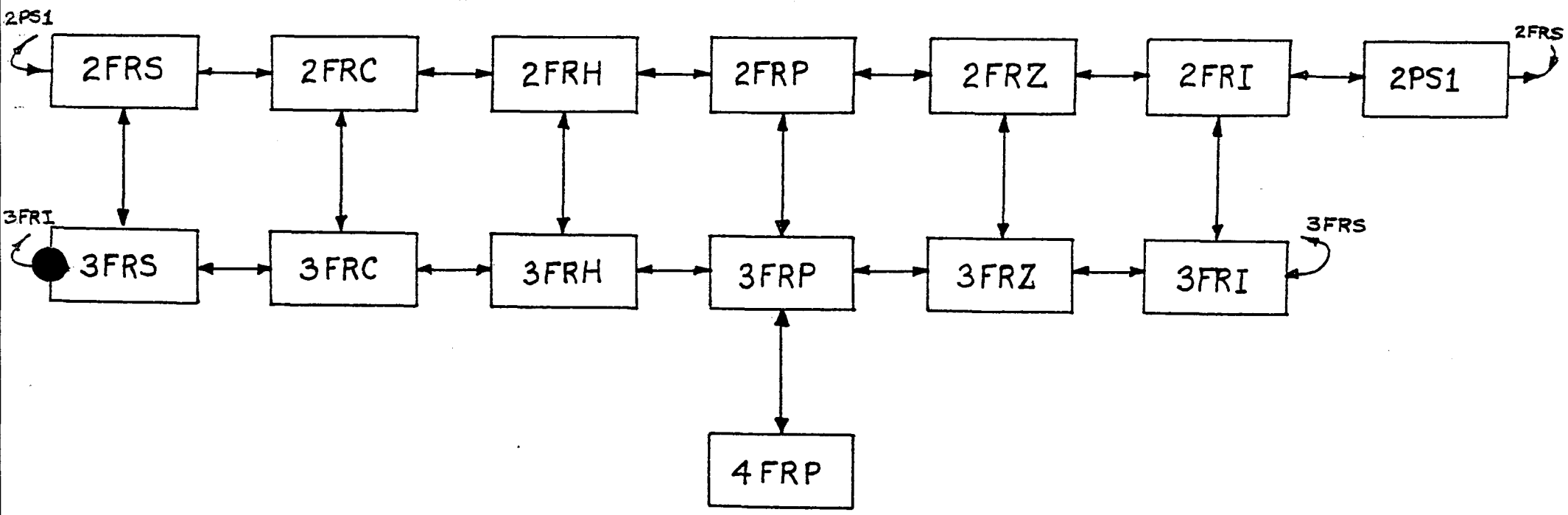

WBN UNIT 1
20:42:53
10/02/90

SUBCRITICALITY

2FRS

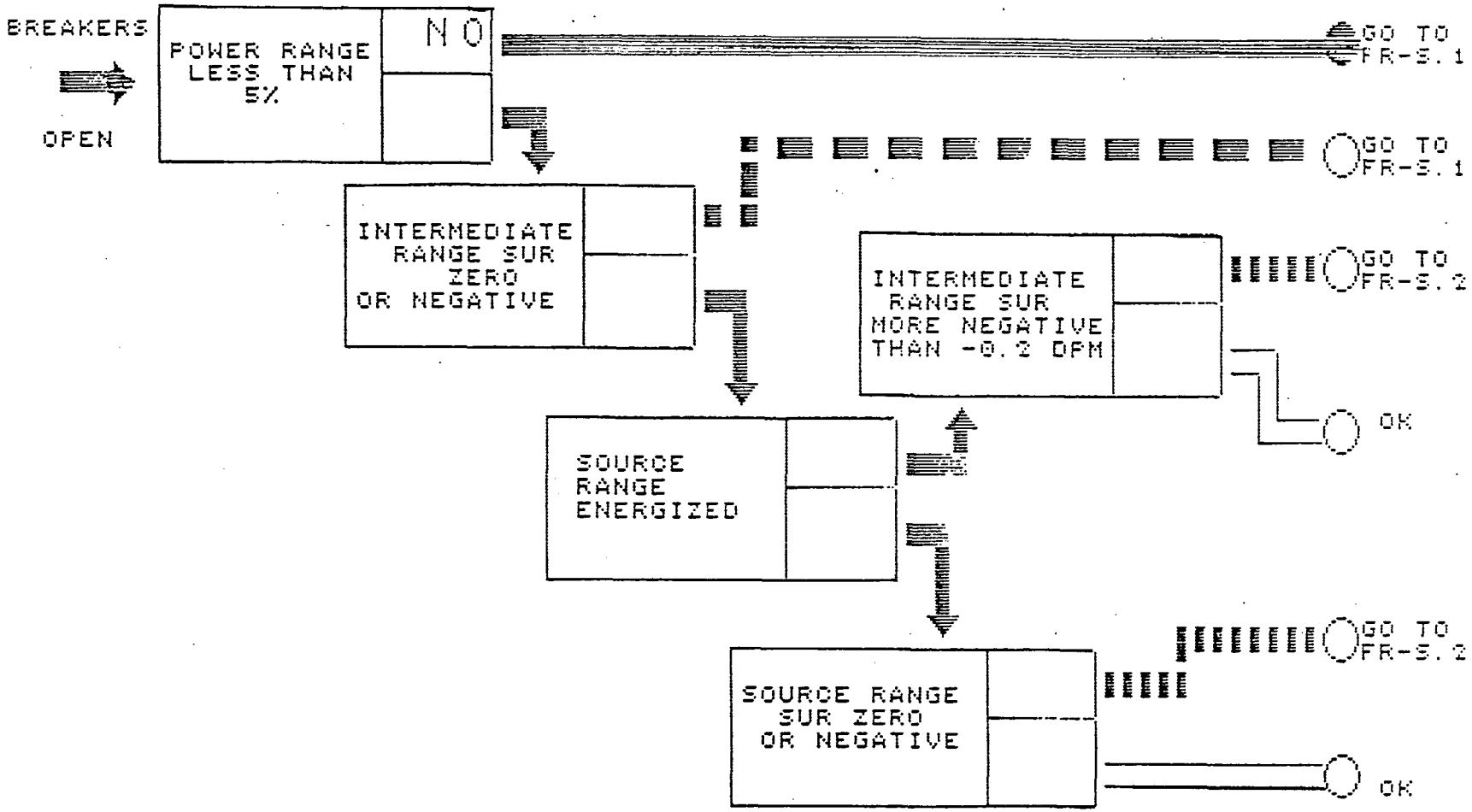

SPDS S C H P Z I

A B

REACTOR TRIP BREAKER CLOSED YES

RTS-99-1A	MAIN BREAKER A	OPEN
RTS-99-1B	MAIN BREAKER B	OPEN
RTS-99-2A	BYPASS BREAKER A	OPEN
RTS-99-2B	BYPASS BREAKER B	OPEN

POWER RANGE < 5 % YES

POWER RANGE AVERAGE XXXX %

NE-94-41	PWR RNG CH1	QD4	XXXX %
42	PWR RNG CH2	QD2	XXXX
43	PWR RNG CH3	QD1	XXXX
44	PWR RNG CH4	QD3	XXXX

INTERMEDIATE RANGE SUR XXXX DPM

LOG IR FLUX XXXX LOG%

IR SUR FLUX XXXX CPS

NE-94-35 IR FLUX CH 1	XXXX	LOGAMP
36 IR FLUX CH 2	XXXX	

SOUCE RANGE ENERGIZED YES

SOURCE RANGE SUR XXXX DPM

LOG SOURCE RANGE FLUX XXXX LOG%

SOURCE RANGE FLUX XXXX CPS

NE-94-31 SR FLUX CH 1	XXXX	LOGCPS
32 SR FLUX CH 2	XXXX	

WBN UNIT 1
20:43:25
10/02/90

CORE COOLING

2FRC

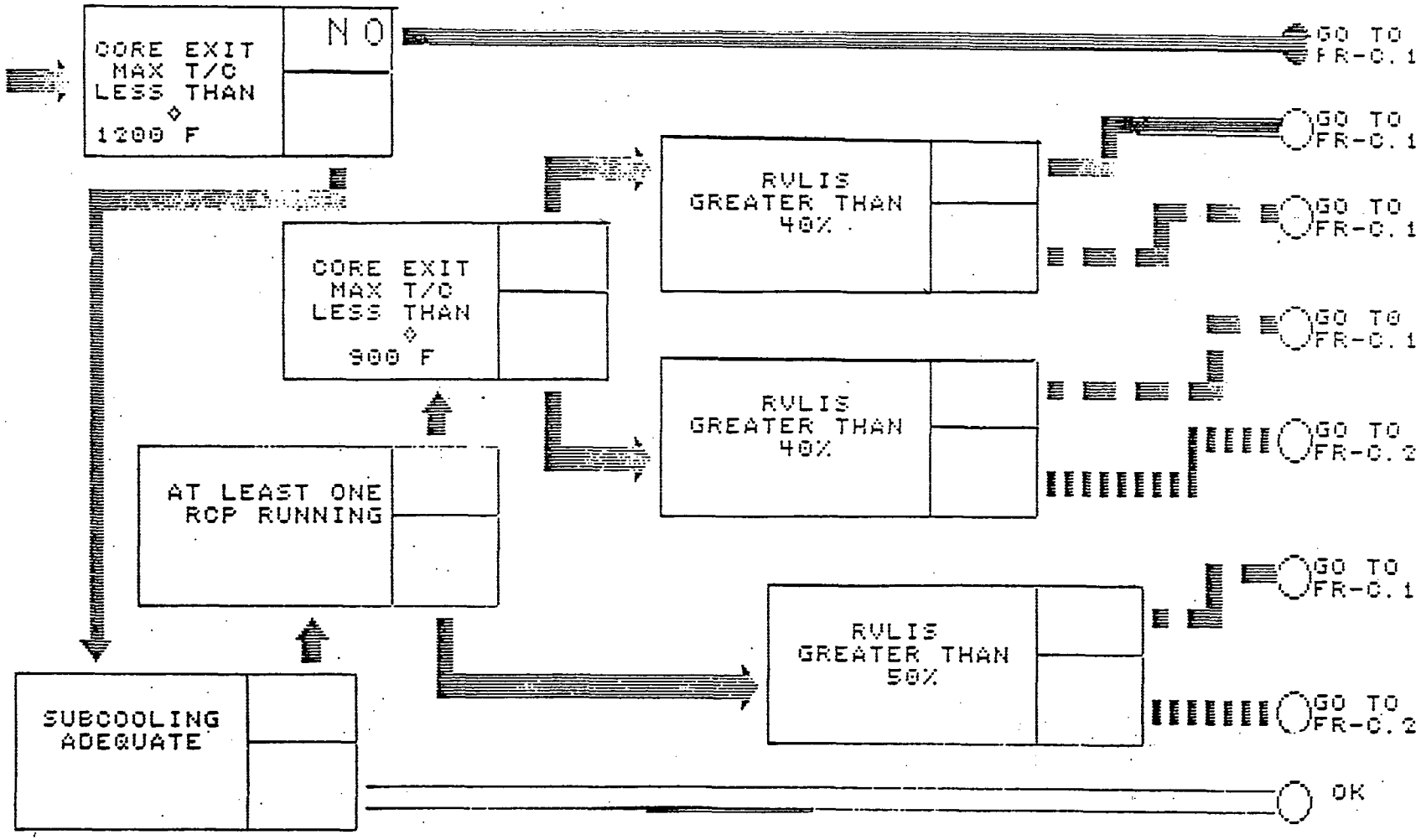

SPDS S C H P Z I

A B

CORE EXIT TEMPERATURE < 1200 DEGF	YES	
CORE EXIT TEMPERATURE	XXXXX	DEGF
RCS SUBCOOLING ADEQUATE	YES	
SUBCOOL MARGIN TN A	XXXX	DEGF
TN B	XXXX	
AT LEAST ONE RCS PUMP RUNNING	YES	
PMP-68-8 RCP 1	ON	
31 RCP 2	ON	
50 RCP 3	ON	
73 RCP 4	ON	
CORE EXIT TEMPERATURE < 900 DEGF	YES	
RVLIS LEVEL > 40%	YES	
RVLIS LEVEL > 50%	YES	
LM-68-368E-D RVLIS LEVEL TN A	XXXX	%
368E-E RVLIS LEVEL TN B	XXXX	%

WBN UNIT 1
20:43:50
10/02/90

HEAT SINK

2FRH

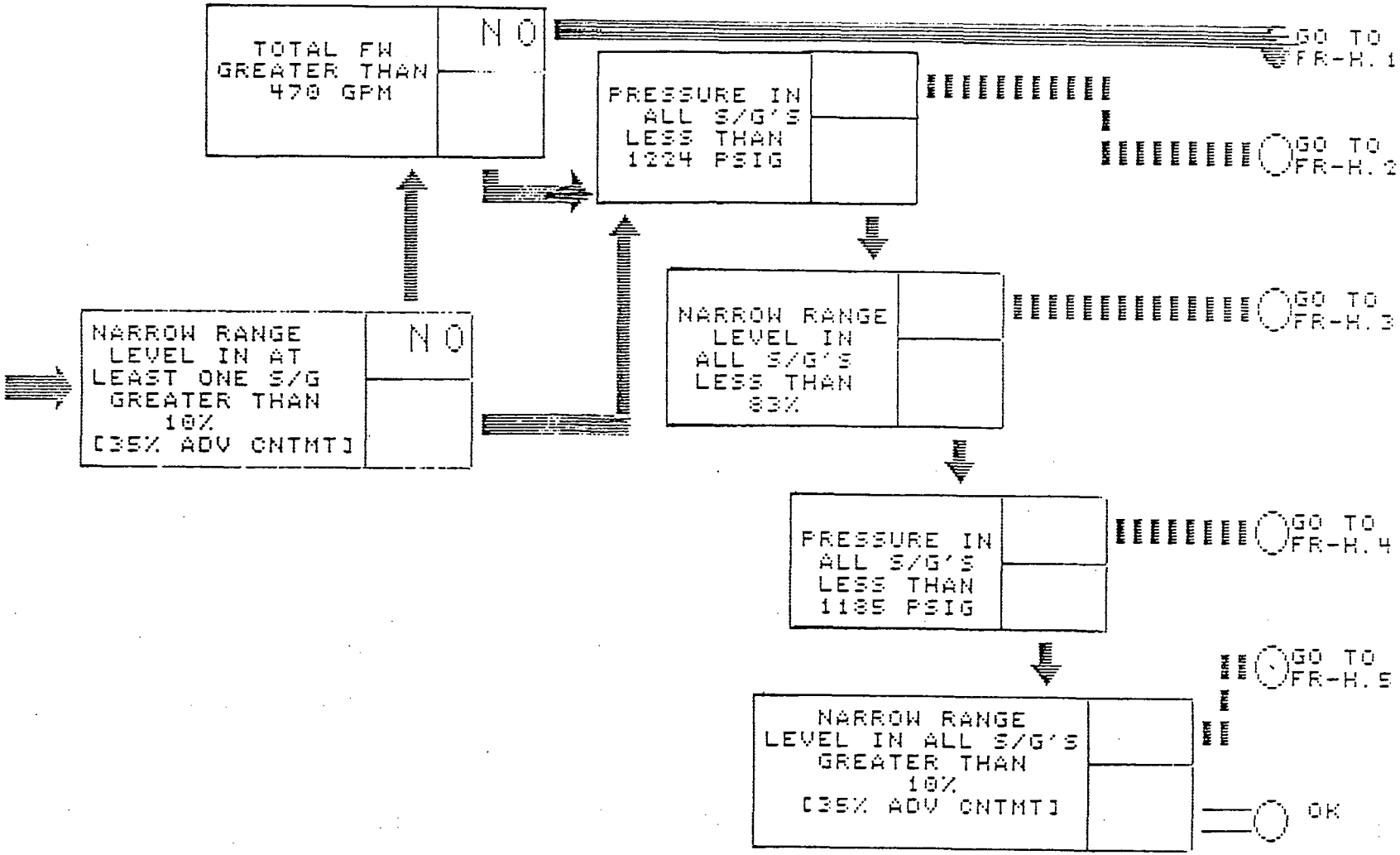

SPDS S C H P Z I

A B

WBN UNIT 1
20:46:35
10/02/90

2FRH PARAMETERS

3FRH

SG 1 NR AVERAGE	XXXX %	SG 2 NR AVERAGE	XXXX %
LT-3-39-F	XXXX	LT-3-52-F	XXXX
42-G	XXXX	55-G	XXXX
SG 3 NR AVERAGE	XXXX %	SG 4 NR AVERAGE	XXXX %
LT-3-94-F	XXXX	LT-3-107-F	XXXX
97-G	XXXX	110-G	XXXX

TOTAL FW FLOW XXXXX GPM

SG 1	FM-3-163A-A	(AFW)	XXXXX GPM	SG 2	FM-3-155-B	(AFW)	XXXXX GPM
	FT-3-235A	(BYPASS)	XXXXX PPH		FT-3-238A	(BYPASS)	XXXXX PPH
	FE-3-35A/B	(MFW)	XXXXX KBH		FE-3-48A/B	(MFW)	XXXXX KBH
SG 3	FM-3-147A-A	(AFW)	XXXXX GPM	SG 4	FM-3-170B-B	(AFW)	XXXXX GPM
	FT-3-241A	(BYPASS)	XXXXX PPH		FT-3-244A	(BYPASS)	XXXXX PPH
	FE-3-90A/B	(MFW)	XXXXX KBH		FE-3-103A/B	(MFW)	XXXXX KBH

SG 1 MS PRESS AVG	XXXXX PSIG	SG 2 MS PRESS AVG	XXXXX PSIG
PT-1-2A-D	XXXXX	PT-1-3A-D	XXXXX
2B-E	XXXXX	3B-E	XXXXX
SG 3 MS PRESS AVG	XXXXX PSIG	SG 4 MS PRESS AVG	XXXXX PSIG
PT-1-20A-D	XXXXX	PT-1-27A-D	XXXXX
20B-E	XXXXX	27B-E	XXXXX

PTS

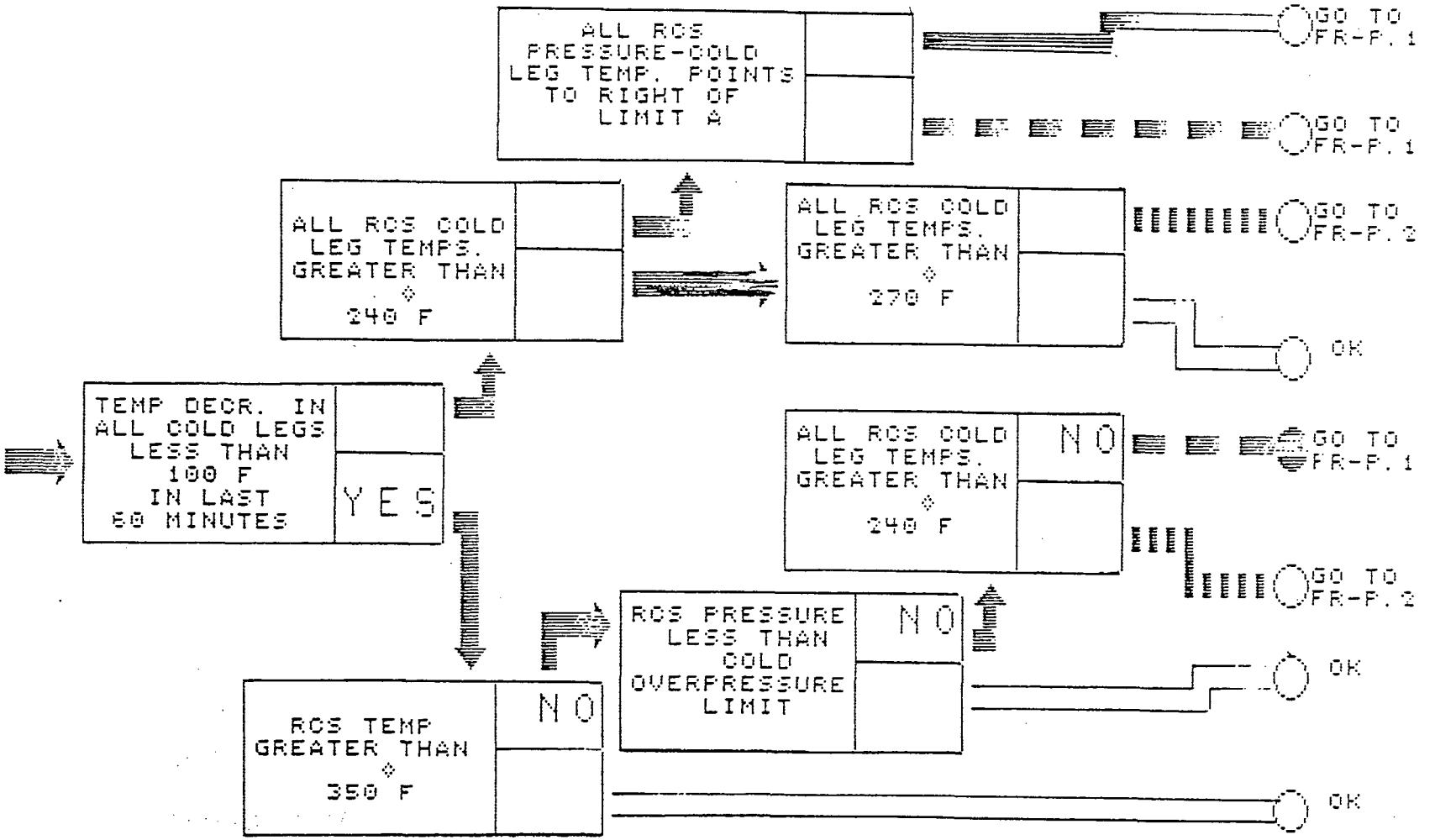
ALL RCS PRESSURE-COLD LEG TEMP. POINTS TO RIGHT OF LIMIT A
GO TO FR-P.1
GO TO FR-P.1
ALL RCS COLD LEG TEMPS. GREATER THAN ◇ 240 F
ALL RCS COLD LEG TEMPS. GREATER THAN ◇ 270 F
GO TO FR-P.2
OK
TEMP DECR. IN ALL COLD LEGS LESS THAN 100 F IN LAST 60 MINUTES
YES
ALL RCS COLD LEG TEMPS. GREATER THAN ◇ 240 F
NO
GO TO FR-P.1
GO TO FR-P.2
RCS PRESSURE LESS THAN COLD OVERPRESSURE LIMIT
NO
OK
RCS TEMP GREATER THAN ◇ 350 F
NO
OK

COLD LEG DECREASE < 100 DEGF IN LAST 60 MINUTES		YES
ALL RCS PRESS-CL TEMPS TO RIGHT OF LIMIT A		YES
LIMIT A	XXXX	DEGF
ALL RCS CL TEMPS > 240 DEGF	YES	
ALL RCS CL TEMPS > 270 DEGF	YES	
ALL RCS CL TEMPS > 350 DEGF	YES	
RCS PRESS < COLD OVERPRESSURE LIMIT	YES	
COLD OVERPRESSURE LIMIT	XXXX	
RCS CL TEMP AVG	XXXX	DEGF
TE-68-18-D LP 1 CL WR TEMP	XXXX	
41-D LP 2 CL WR TEMP	XXXX	
60-E LP 3 CL WR TEMP	XXXX	
83-E LP 4 CL WR TEMP	XXXX	
RCS WR PRESS AVG	XXXX	PSIG
PT-68-63-D RC WR PRESS LP 1	XXXX	
64-E RC WR PRESS LP 3	XXXX	

UNIT 1
HH:MM:SS
MM/DD/YY

REFERENCE CURVES FOR
PTS STATUS TREE

4FRP

COLD OVERPRESSURE LIMIT CURVE

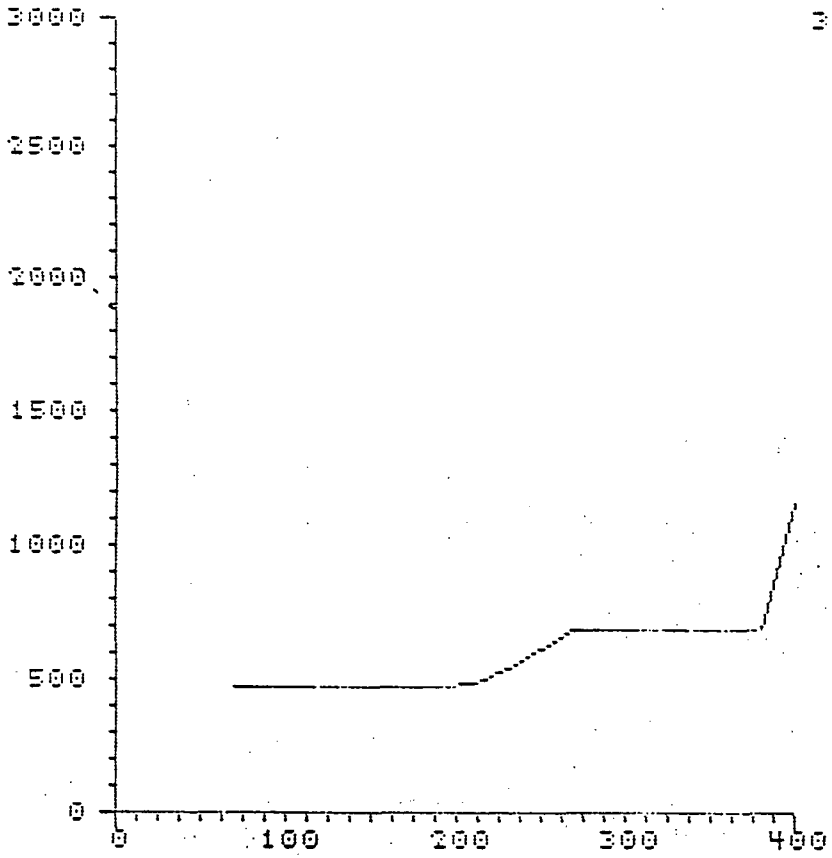

RCS CL AVG TEMP XXXX DEGF

RCS PRESS AVG XXXX PSIG

LIMIT A CURVE

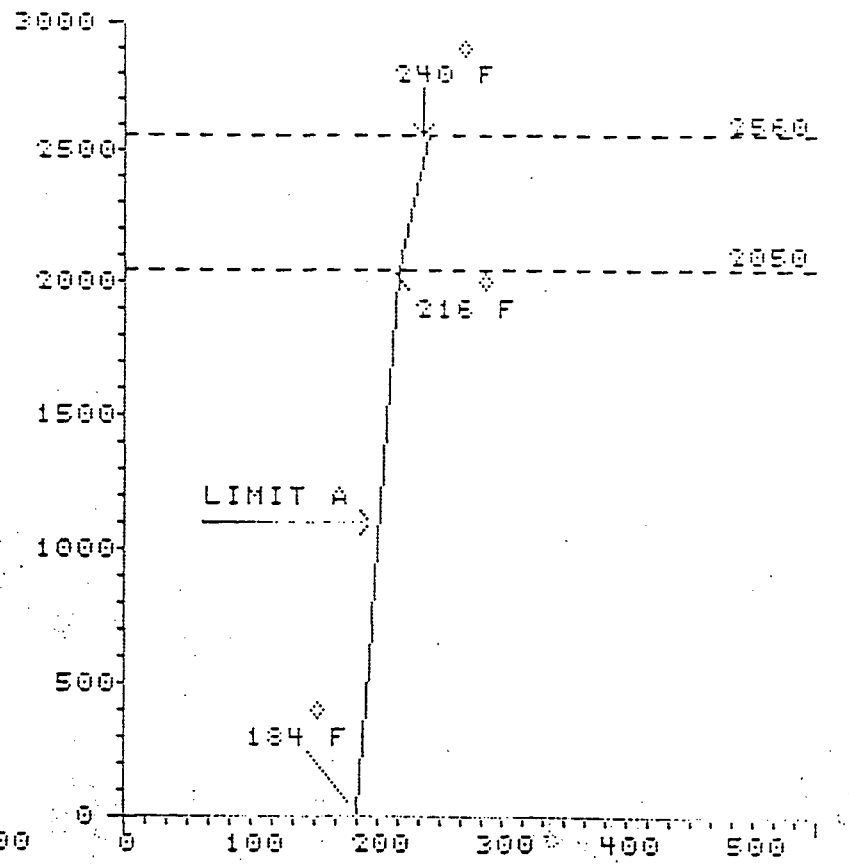

RCS CL TEMP LOOP 1 XXXX DEGF
RCS CL TEMP LOOP 2 XXXX DEGF
RCS CL TEMP LOOP 3 XXXX DEGF
RCS CL TEMP LOOP 4 XXXX DEGF

SPDS SCHPZI

AB

WBN UNIT 1
20:44:36
10/02/90

CONTAINMENT

2FR2

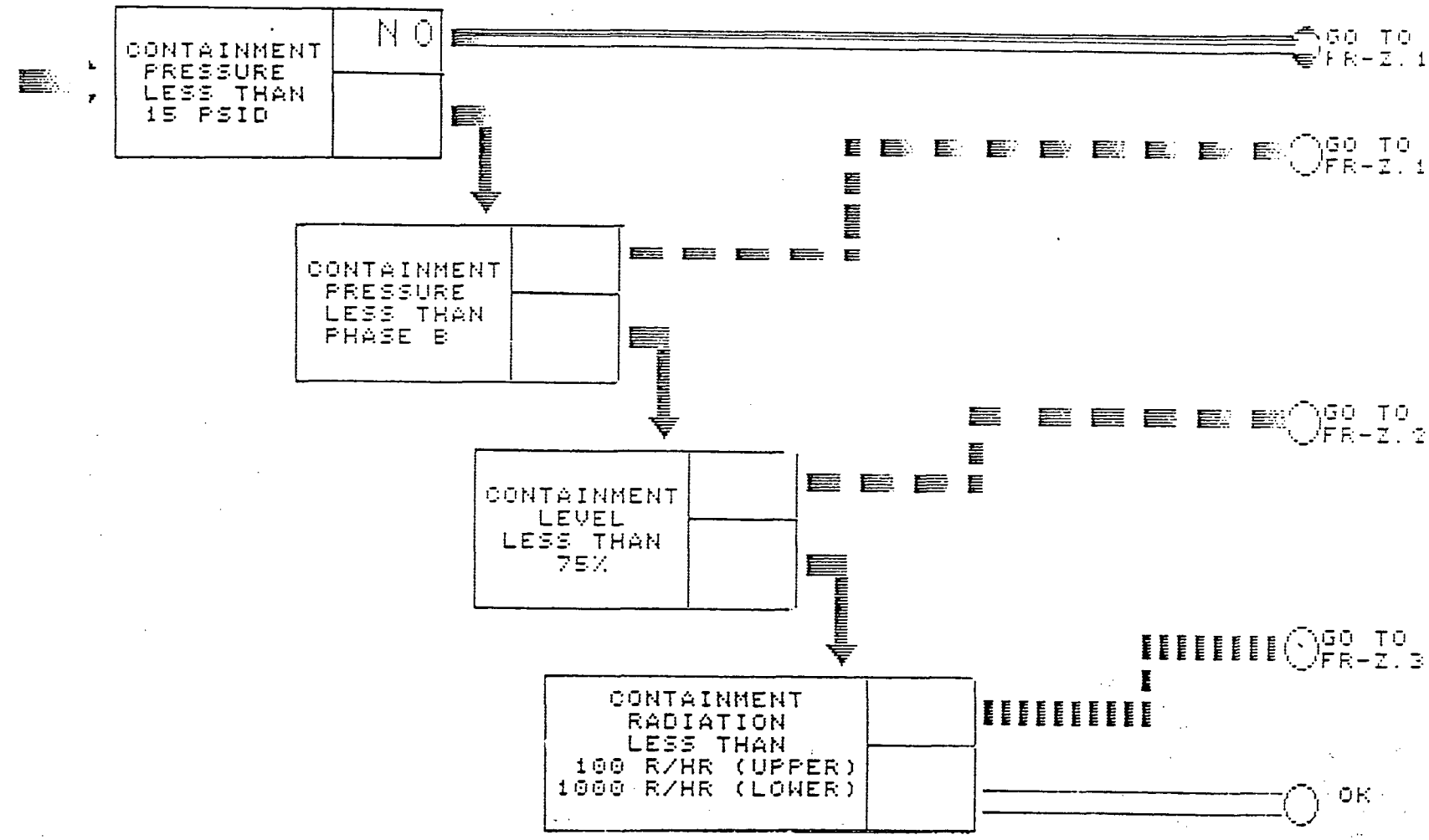

SPDS S C H P Z I

A B

CNTMT PRESS < 15 PSID YES

CNTMT AVG PRESS - WR XXXX PSID

PDT-30-310-A XXXX
311-B XXXX

CNTMT PRESS < PHASE B YES

CNTMT AVG PRESS - NR XXXX PSID

PDT-30-44-E XXXX
45-D XXXX

CNTMT SUMP LEVEL < 75 % YES

CNTMT SUMP LEVEL AVG XXXX FT

LT-63-180-D LEV I XXXX
181-E II XXXX
182-F III XXXX
183-G IV XXXX

CNTMT RAD < 100 R/HR (UPPER) YES

UPPER CNTMT RAD AVG XXXX R/HR

RE-90-271-A XXXX
272-B XXXX

CNTMT RAD < 1000 R/HR (LOWER) YES

LOWER CNTMT RAD AVG XXXX R/HR

RE-90-273-A XXXX
274-B XXXX

WBN UNIT 1
20:44:58
10/02/90

INVENTORY

2FR1

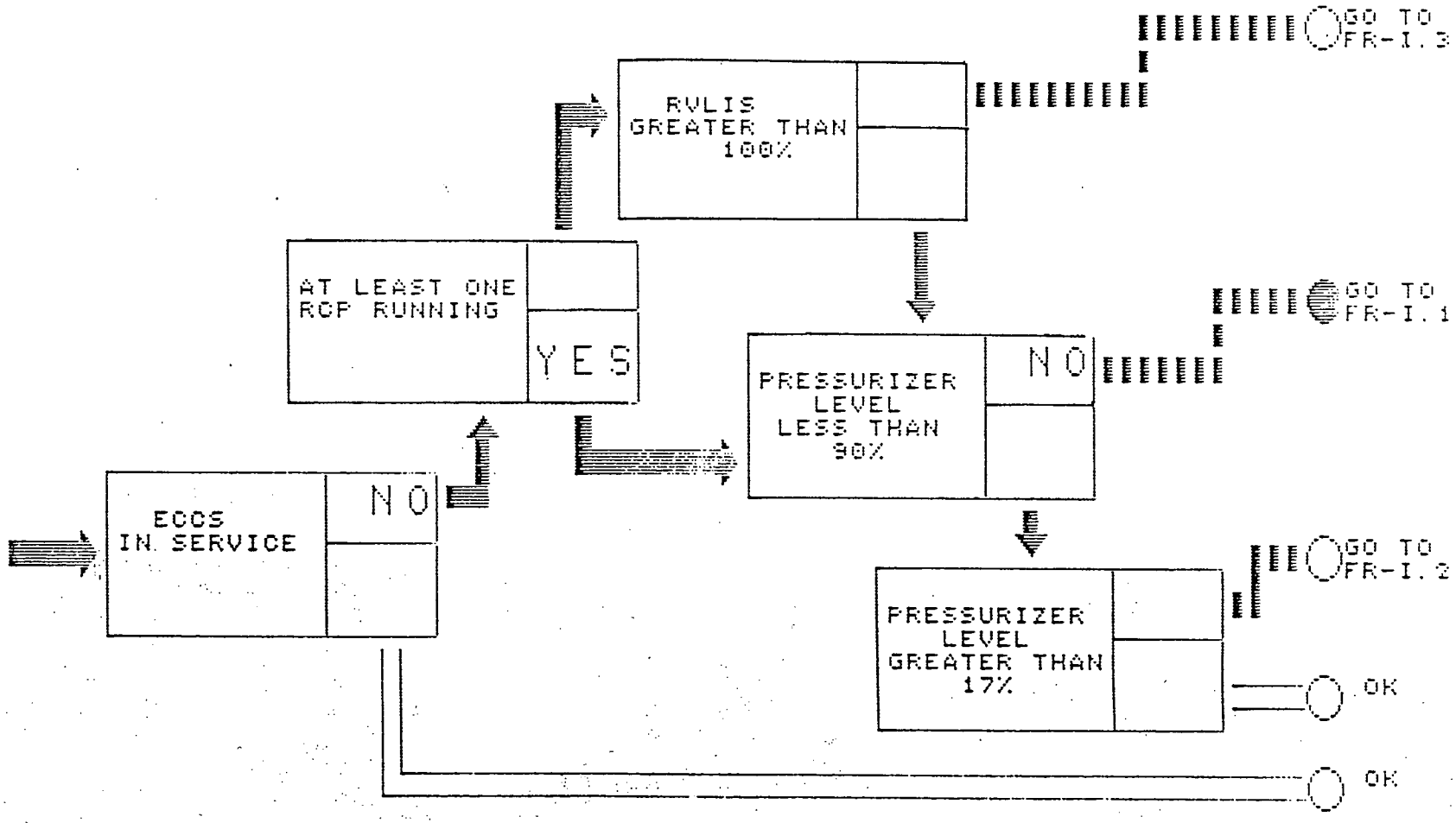

SPDS S C H P Z I

A B

ECCS IN SERVICE	YES
PMP-63-10-A SI PMP 1A-A	ON
15-B SI PMP 1B-B	ON
FCV-63-25-B SIS BIT SHUTOFF VALVE	OPEN
26-A SIS BIT SHUTOFF VALVE	OPEN
AT LEAST ON RCP PUMP RUNNING	YES
PMP-68-8 RCP 1	ON
31 RCP 2	ON
50 RCP 3	ON
73 RCP 4	ON
RVLIS > 100 %	YES
RVLIS MAX	XXXX %
LM-68-369E-D RVLIS TN A LEVEL	XXXX
369E-E RVLIS TN B LEVEL	XXXX
PZR LEVEL < 90 %	YES
PZR LEVEL > 17 %	YES
PZR LEVEL AVG	XXXX %
LT-68-339-D	XXXX
335-E	XXXX
320-F	XXXX

WBN UNIT 1
20:45:22
10/02/90

PLANT STATUS

2PS1

NUC PWR
XXXX %

IR SUR
XXXX DPM

SR SUR
XXXX DPM

SI

LTDN

CHG

ALL
RODS
NOT AT
BOTTOM

L- %
P-
PSIG

RCS

RVLIS AXXXXX BXXXXX

WR PRESS XXXX PSIG

TAVG-TREF XXXX F
LOOP X

CORE
EXIT AVG XXXX F

SUBCOOL XXXX F

CLD LG ROC XXXX F/HR

CHG XXXX GPM
LTDN XXXX GPM

BIT GPM
SI GPM
RHR CL GPM

CNTMT

ISOL PH-A	NOT ACT
ISOL PH-B	NOT ACT
SPRAY	NOT ACT
H2 CONC	XXXX %
PRESS	XXXXPSID
SUMP LVL	XXXX FT

RAD

CNTMT	NORM
S/G DISCHARGE	NORM
S/G BLOWDOWN	NORM
CNDS VAC EXH	NORM
AUX BLDG EFF	NORM
SHLD BLDG EFF	NORM
SERV BLDG EFF	NORM

AFW
BYP
MFW XXXXX
KBH 3-33A

AFW
BYP
MFW XXXXX
KBH 3-47B

AFW
BYP
MFW XXXXX
KBH 3-87A

AFW
BYP
MFW XXXXX
KBH 3-100B

GPM
KBH

NR XXXX% 1
NR XXXX% 2
NR XXXX% 3
NR XXXX% 4

PSIG
KBH

MSIV ISOL

AFW ACT

MFW ISOL

STM DMP NOT ACT

TRIP

S/G PORV NOT ACT

AMSAC ARMED

AMSAC ACTIVE

SPDS S C H P Z I

A B

APPENDIX C

WBN SPDS ELECTRICAL ISOLATION INFORMATION

This information provides a revised response to the NRC's original request dated September 14, 1984 (NRC question 420.01) concerning electrical isolation of the SPDS from safety systems. The information provided below supersedes Attachment D of TVA's letter dated March 27, 1985. Attachments A through C and E through I in that response are still applicable.

INSTRUMENTATION AND CONTROL SYSTEMS INFORMATION

420.01 Isolation Devices

Provide the following:

a. For each type of device used to accomplish electrical isolation, describe the specific testing performed to demonstrate that the device is acceptable for its application(s). This description should include elementary diagrams when necessary to indicate the test configuration and how the maximum credible faults were applied to the devices.

RESPONSE: Two models of Potter & Brumfield relays are used for the WBN SPDS, Model KUIP-3A11-120, designed for use in 120V ac circuits and KUIP-3A11-130, designed for use in 125V dc circuits. These relays replace the Crydom Relays (Model A1202-1) described in Attachment D to the above referenced letter. An analysis verifies that the devices are acceptable for the isolation function intended. The Potter & Brumfield type KUIP relay is an electromechanical relay that provides coil to contact isolation between the input power source and the output circuit.

b. Data to verify that the maximum credible faults applied during the test were the maximum voltage/current to which the device could be exposed, and define how the maximum voltage/current was determined.

c. Data to verify that the maximum credible faults applied to the output of the device in the transverse mode (between signal and return) and other faults were considered (i.e., open and short circuits).

RESPONSE (b and c): The output terminals of the device could be subjected to a maximum circuit voltage of 48V dc.

The attached sketch illustrate the circuit in which the KUIP relay is applied. The maximum fault current the output side of the relay could experience, would be when a short circuit is applied directly across the input to the contact sensing card of the multiplexer when the contacts of the relay are closed.

APPENDIX C

WBN SPDS ELECTRICAL ISOLATION INFORMATION

TVA's engineering calculation identifies that fault currents that can be delivered by small solid-state power supplies such as the 48V dc power supply used in this application, are inherently limited by internal impedances to a few multiples of its full load current. The cables are fused by BUSS Model GBA-1, a 1 amp fuse with a 10,000 amp short circuit rating. The full load output of this power supply is less than 10 amps and under short circuit conditions would only provide 3 to 4 times that amount. The circuit is adequately protected because the available short circuit current is less than the protective device rating. The coil to contact isolation of 3750 volts would prevent any migration of the fault from the output (contacts) of the relay to the input (coil) circuit. The fast clearing time of the fault by the circuit fuses would prevent any significant heat buildup in the relay.

d. Define the pass/fail acceptance criteria for each type of device.

RESPONSE: There is no safety requirement for the device to maintain signal output continuity and accuracy during or after a design basis event.

e. A commitment that the isolation devices comply with the environmental qualifications (10 CFR 50.49) and with the seismic qualification that were the basis for plant licensing.

RESPONSE: A seismic test was performed by the supplier of the relay in order to determine the potential effects a seismic event may have on the isolation function of the isolator. The relays, socket, and mounting satisfactorily passed the seismic test. Therefore, the device will continue to perform its intended function of isolating the safety-related circuit from any credible faults occurring in the nonsafety-related circuit during a seismic event. The test report is on file at WBN.

The device is located in a mild environment. The device is rated to carry an output load current of 5 ampres at 120V ac in an ambient temperature ranging from -49 degrees Fahrenheit (°F) to +176°F. This rated temperature range is greater than the abnormal 40°F to 120°F and 1 amp load current (load circuit fused at 1 amp) that the device would experience in the installed environment. This margin ensures that the device performs its intended isolating function during normal and abnormal environmental conditions.

f. A description of the measures taken to protect the safety systems from electrical interference (i.e., Electrostatic Coupling, EMI, Common Mode and Crosstalk) that may be generated by the SPDS.

RESPONSE: Industry-accepted practices of routing cable and grounding of circuits have been utilized in the design to minimize effects of radiated or coupled signals on the input leads to the device. The devices are rated by the manufacturer to withstand 3750 volts between the coil and the contacts. The relays are located outside the computer room where the SPDS is located. The 48V dc, the contact sensing voltage, does not cause EMI emissions that could interfere with the current operation of the safety circuit.

Typical Circuit Utilizing the Potter & Brumfield KUIP typerelay.

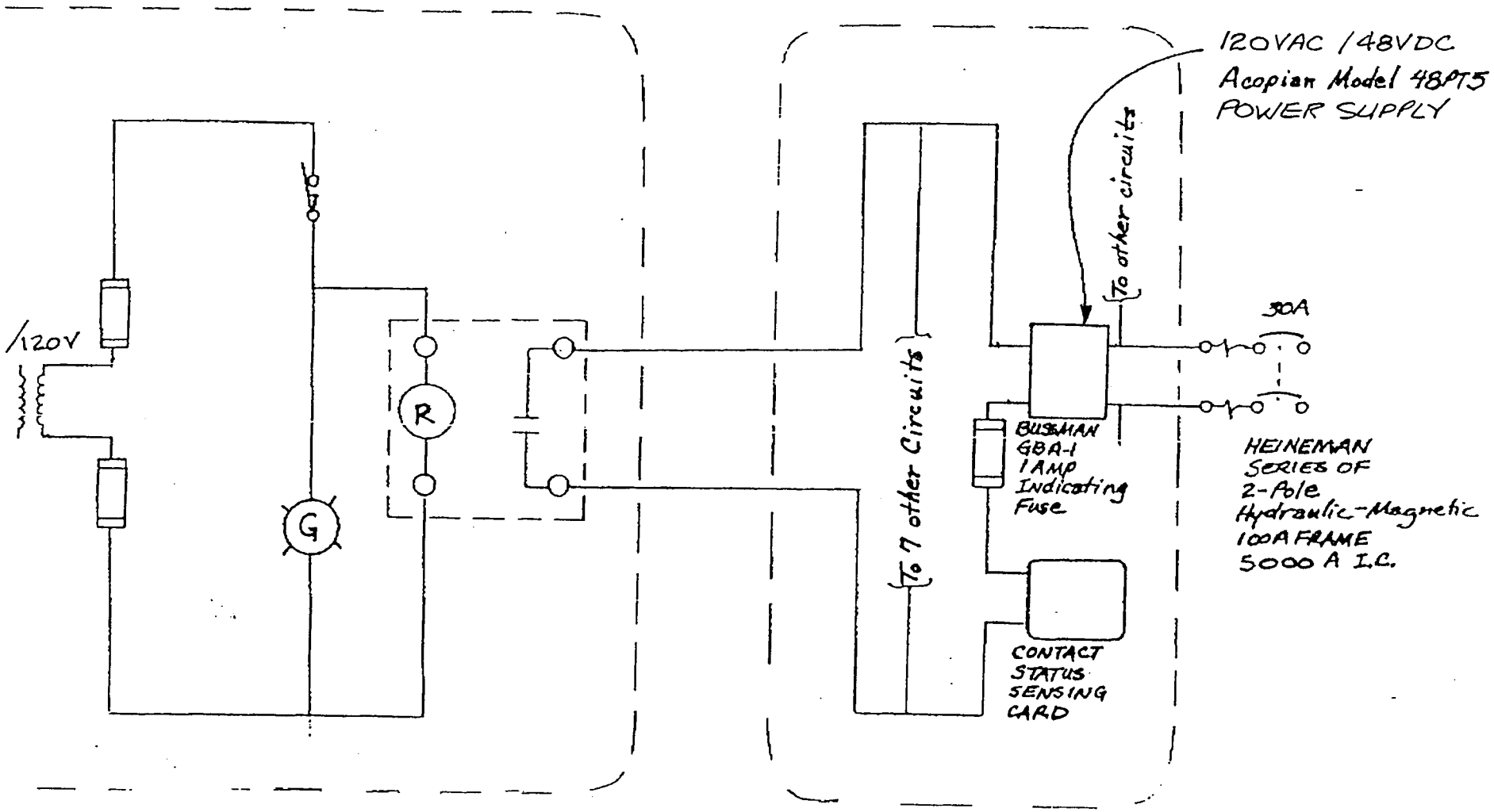

Motor Control Center
(Train A or B)
Relay mounted on rear panel

TECHNical Support Center
Status Monitoring Cabinet
(Non-divisional)

APPENDIX D

WBN SPDS KEYBOARD LAYOUT

Notes to attached figure:

1. Depressing the "SPDS" key will result in display of the page with the highest priority SPDS alarm, where the level (color) of alarm has first priority (red = highest, orange = middle, yellow = lowest) and the status tree itself dictates the second priority (S = highest .....I = lowest). If there are no status tree alarms, the 2PS1 (Plant Status) display will be shown.

2. Depressing the following keys will result in the listed displays:

   S - Subcriticality (2FRS)
   C - Core Cooling (2FRC)
   H - Heat Sink (2FRH)
   P - PTS (2FRP)
   Z - Containment (2FRZ)
   I - Inventory (2FRI)

3. The "SPDS" and "S", "C", "H", "P", "Z", and "I" keys will be designed for maximum contrast and visibility (e.g., white characters on red). The remaining function keys will be designed for a lower contrast (e.g., white characters on grey). The spare and QWERTY keys will be low contrast (e.g., black on tan). Spare keys will be blank.

SPDS FUNCTION KEY LAYOUT

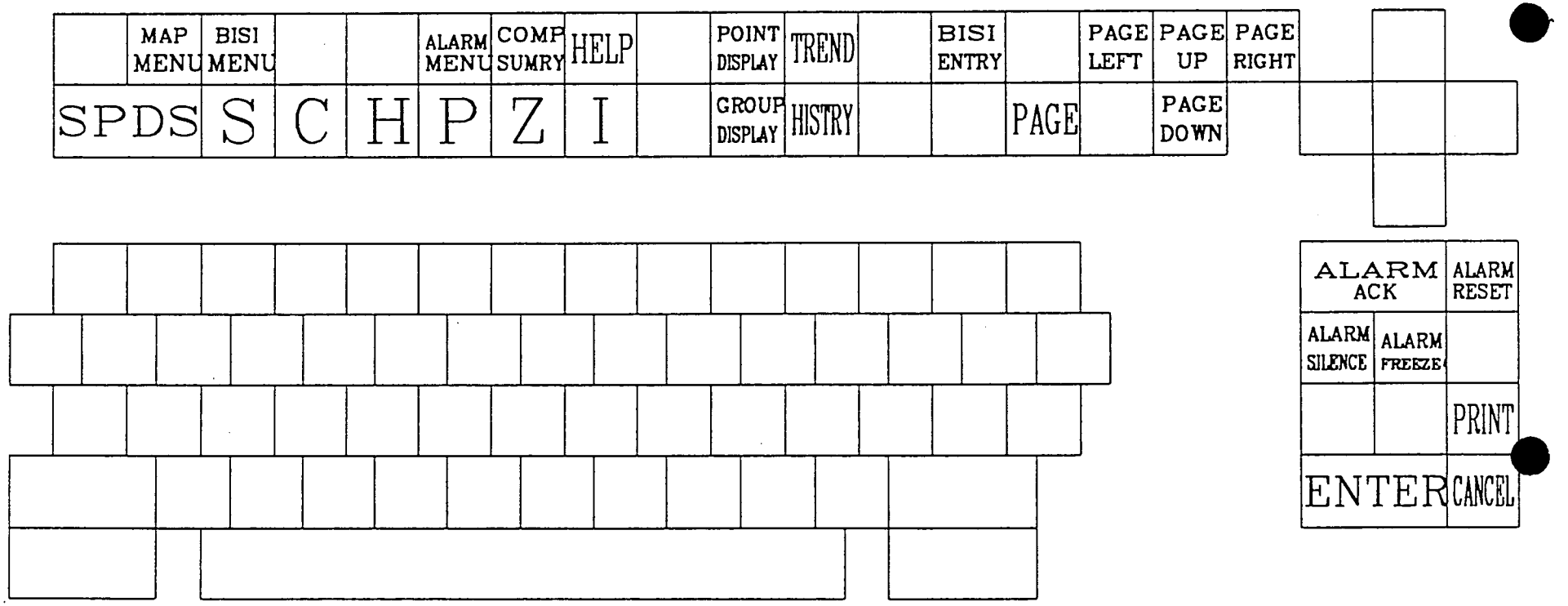

ENCLOSURE 2
WATTS BAR NUCLEAR PLANT (WBN)
SAFETY PARAMETER DISPLAY SYSTEM (SPDS)
LIST OF COMMITMENTS

1. To ensure that the status boxes are continuously displayed, the WBN SPDS software will not be designed with the capability to overwrite any of the status boxes (located at the bottom left corner of the displays) under any condition.

2. The five critical safety functions will continously display by virture of the Containment isolation status panels, the six status tree boxes, and the single "SPDS" status box. The seven status boxes ("SPDS", "S", "C", "H", "P", "Z", and "I") will be continuously displayed in the same location on the various displays in the system, including non-SPDS displays.

3. WBN will generate a detailed Instrument Maintenance Instruction (IMI) for calibration, hardware operation and overall maintenance. The IMI will be implemented by qualified maintenance personnel on a periodic basis, or as required for system repair, or as needed by the Preventative Maintenance (PM) Procedure.

4. WBN will upgrade the existing PM to encompass the upgraded system.

5. Software changes will be documented, approved, and controlled by qualified personnel and procedures.

6. The initial SPDS software and changes made to it will undergo formal verification and validation to ensure that requirements are accurately specified, implemented and tested.

7. Routine instrument loop calibration of sensors that provide input to the SPDS will include verification that the SPDS-displayed values are correct. WBN's instrument surveillance instructions will incorporate these verifications.

8. The cause and corrective action taken to resolve the problem will be documented through the implementation of the IMI, and if it is determined that the SPDS is unavailable, the duration and unavailability will be documented. In addition, the instruction will generate a periodic calculation of system unavailability and determination of causes will be performed to identify trends and generic corrective actions to be taken.

9. A form for recording SPDS comments by operations personnel will be developed and used as the vehicle for ensuring that future operator feedback is considered.

10. Changes to the EOI's may effect the SPDS, and therefore the EOI writer's guide will include reference to the need to verify the SPDS as part of any EOI revision.

11. SPDS setpoints, logic flows, and display formats will be verified against control room instrumentation, operating procedures, and system/sensor characteristics as applicable.

12. TVA will utilize lighter colors (cyan and white) to provide greater contrast between the previous blue (text, piping, and poor/bad data) and the black display background.