Figure 10.4.7-1—Condensate and Feedwater System (Sheet 1 of 2)

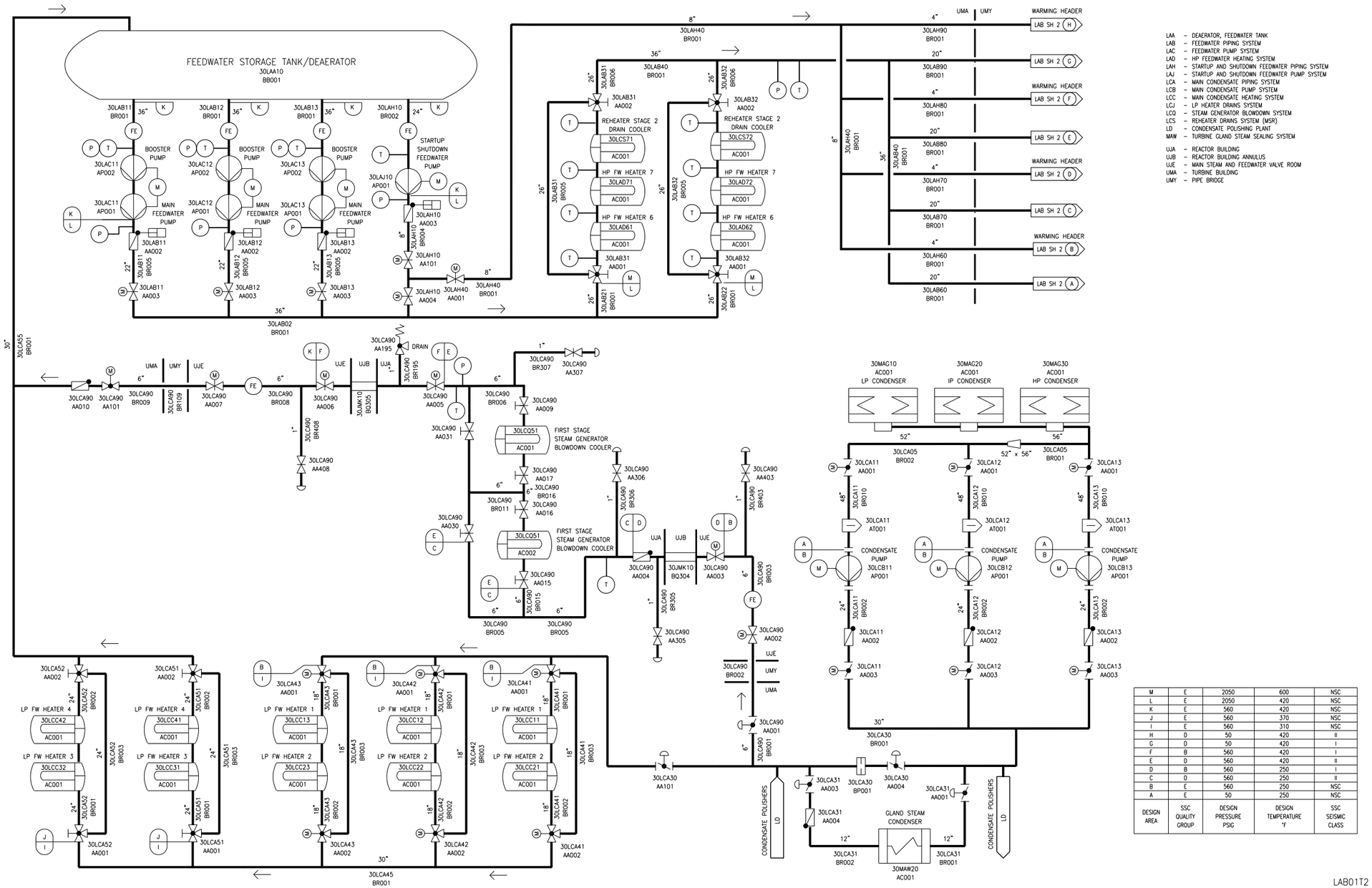

M	E	2050	600	NSC
L	E	2050	420	NSC
K	E	560	420	NSC
J	E	560	370	NSC
I	E	560	310	NSC
H	D	50	420	II
G	D	50	420	I
F	B	560	420	I
E	D	560	420	II
D	B	560	250	I
C	D	560	250	II
B	E	560	250	NSC
A	E	50	250	NSC
DESIGN AREA	SSC QUALITY GROUP	DESIGN PRESSURE PSIG	DESIGN TEMPERATURE °F	SSC SEISMIC CLASS

Figure 10.4.7-1—Condensate and Feedwater System (Sheet 2 of 2)

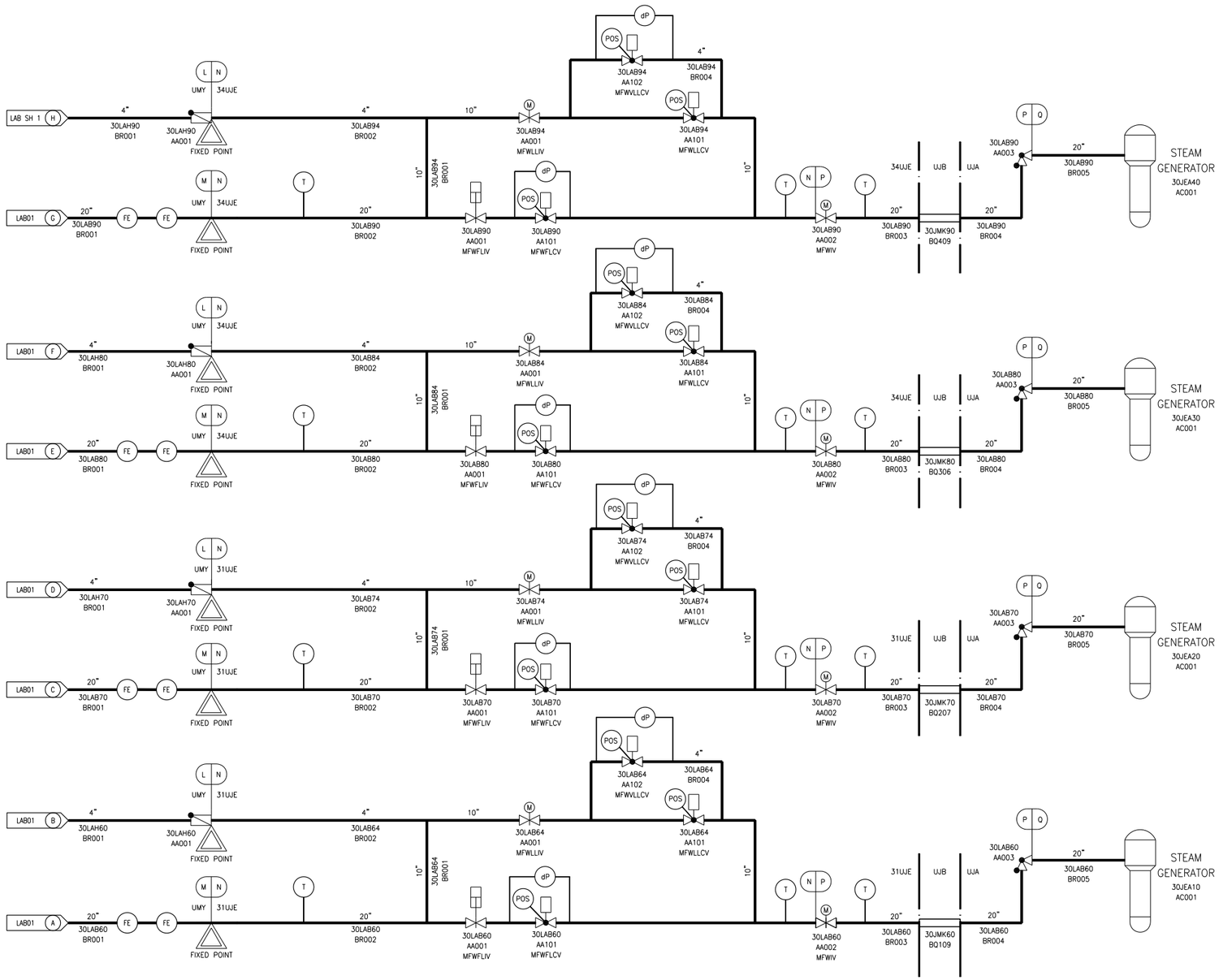

JEA – STEAM GENERATOR
LAB – FEEDWATER PIPING SYSTEM
LAH – STARTUP AND SHUTDOWN FEEDWATER PIPING SYSTEM
UJA – REACTOR BUILDING
UJB – REACTOR BUILDING ANNULUS
31UJE – MAIN STEAM AND FEEDWATER VALVE ROOM, DIVISION 1
34UJE – MAIN STEAM AND FEEDWATER VALVE ROOM, DIVISION 4
UMY – PIPE BRIDGE

MFWFLCV – MAIN FEEDWATER FULL LOAD CONTROL VALVE
MFWFLIV – MAIN FEEDWATER FULL LOAD ISOLATION VALVE
MFWLLCV – MAIN FEEDWATER LOW LOAD CONTROL VALVE
MFWLLIV – MAIN FEEDWATER LOW LOAD ISOLATION VALVE
MFWVLLCV – MAIN FEEDWATER VERY LOW LOAD CONTROL VALVE
MFWIV – MAIN FEEDWATER ISOLATION VALVE

DESIGN AREA	SSC QUALITY GROUP	DESIGN PRESSURE PSIG	DESIGN TEMPERATURE °F	SSC SEISMIC CLASS
Q	B	1435	600	I
P	B	2050	600	I
N	C	2050	600	I
M	E	2050	600	NSC
L	E	2050	420	NSC
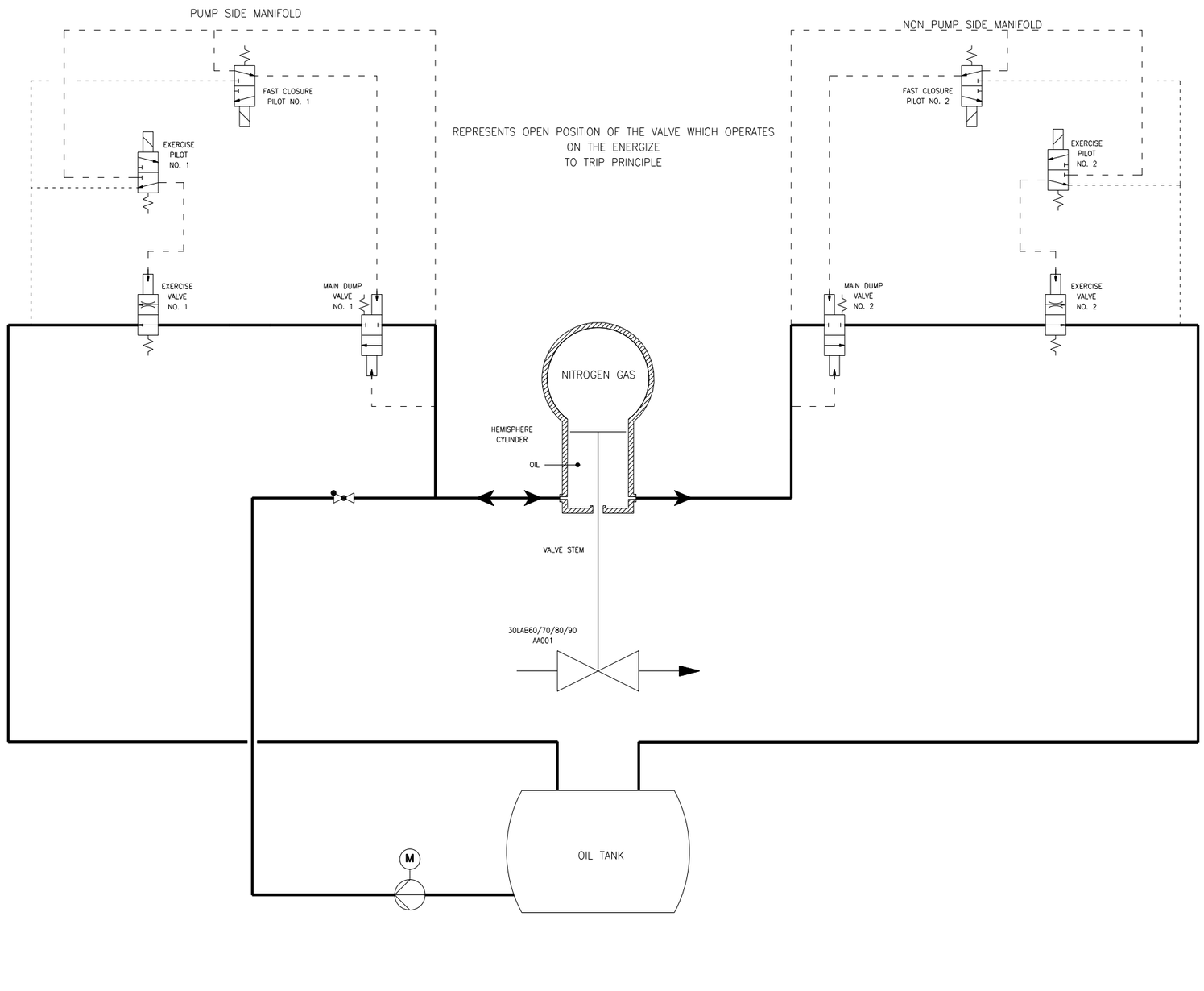
Figure 10.4.7-2—Feedwater Full Load Isolation Valve Hydraulic Actuators