50-390
391
mA/4

UNITED STATES
NUCLEAR REGULATORY COMMISSION
WASHINGTON, D. C. 20555

March 10, 1980

TO ALL PENDING OPERATING LICENSE APPLICANTS OF NUCLEAR STEAM SUPPLY SYSTEMS DESIGNED BY WESTINGHOUSE AND COMBUSTION ENGINEERING

SUBJECT: ACTIONS REQUIRED FROM OPERATING LICENSE APPLICANTS OF NUCLEAR STEAM SUPPLY SYSTEMS DESIGNED BY WESTINGHOUSE AND COMBUSTION ENGINEERING RESULTING FROM THE NRC BULLETINS AND ORDERS TASK FORCE REVIEW REGARDING THE THREE MILE ISLAND UNIT 2 ACCIDENT

In our letter of September 27, 1979 to all pending operating license applicants concerning followup actions resulting from our reviews regarding the Three Mile Island Unit 2 accident, we indicated that each applicant would receive additional guidance from the NRR Bulletins and Orders Task Force. This guidance would be related to (1) Auxiliary Feedwater (AFW) systems, and (2) analyses for small break loss-of-coolant accidents and inadequate core cooling, including guidelines for emergency operating procedures.

The purpose of this letter is to advise you of the information we require related to Auxiliary Feedwater systems. The requirements were identified during the course of the NRR Bulletins and Orders Task Force review of nuclear steam supply systems designed by Westinghouse and Combustion Engineering in light of the Three Mile Island Unit 2 accident.

Auxiliary Feedwater (AFW) Systems

The Three Mile Island Unit 2 accident and subsequent investigations and studies highlighted the importance of the AFW system in the mitigation of transients and accidents. As part of its assessment of the Three Mile Island Unit 2 accident and related implications for operating plants, the staff evaluated the AFW systems for all operating plants having nuclear steam supply systems designed by Westinghouse and Combustion Engineering.

The objectives of the staff's study, related to operation of nuclear steam supply systems designed by Westinghouse, were (a) to identify necessary changes in AFW system design or related operating procedures at operating plants in order to assure continued safe operation of these plants, and (b) to identify other system characteristics in the AFW system design of these plants which on a long-term basis may require system modifications.

To accommodate these objectives the staff reviewed plant-specific AFW system designs in light of current requirements, and assessed the relative reliability of the various AFW systems under various loss-of-feedwater transients, one of which was the initiating event at Three Mile Island Unit 2, and other postulated potential failure conditions by determining the potential for AFW system failure due to common causes, single point vulnerabilities and human error.

D

8004230058

It should be noted that, because of time and personnel limitations, our evaluation of AFW systems was limited to operating reactors at the time these studies were initiated. Our review of these systems resulted in the identification of changes required for current AFW systems. Some of these changes were generic and others were plant specific. A summary of the techniques used in our evaluation is provided in Enclosure 1.*

With respect to operating license applications such as yours, we will require that you (a) provide an evaluation which shows how your AFW system meets each requirement in Standard Review Plan 10.4.9 and Branch Technical Position ASB-10-1, (b) perform a reliability evaluation similar in method to that described in Enclosure 1 that was performed for operating plants and submit it for staff review, (c) factor the recommendations of Enclosure 1 into your plant design, and (d) respond to Enclosure 2, which requests the information necessary to determine the design basis for your AFW system flow requirements and to verify that your AFW system will meet these requirements.

We recognize that operating license applicants for certain facilities, e.g., Salem Unit 2, and North Anna Unit 2, may be essentially identical to plants for which we have identified AFW system modifications. In such instances, information already provided for the operating plants may be directly applicable to plants under review for an operating license. It is acceptable to the staff if you reference such information in your response. However, you must also include a description of any differences between the operating plant and the plant under review for an operating license and provide justification in order for us to determine if the resolution for the operating plant is applicable to your facility.

Provide the information discussed above as an amendment to your application. Your schedule for submittal should take into consideration that the current version of the Task Action Plan requires staff review and approval of this information prior to issuance of a full power license.

Sincerely,

D. F. Ross, Jr., Acting Director
Division of Project Management
Office of Nuclear Reactor Regulation

Enclosures:
As Stated

cc: Service Lists

* Enclosure 1 is Appendix 3 to the staff generic evaluation of Westinghouse designed plants. The techniques described and recommendations are applicable to Combustion Engineering designed plants.

ENCLOSURE 1

APPENDIX III

AUXILIARY FEEDWATER SYSTEMS

1. INTRODUCTION

The Three Mile Island Unit 2 (TMI-2) accident and subsequent investigations and studies highlighted the importance of the auxiliary feedwater (AFW) system in the mitigation of transients and accidents. As part of its assessment of the TMI-2 accident and related implications for operating plants, the staff evaluated the AFW systems for all operating plants having nuclear steam supply systems (NSSS) designed by Westinghouse (W) (25 units) or Combustion Engineering (CE) (8 units). (See note below.)

The objectives of this study were to: (1) identify necessary changes in AFW system design or related procedures at these plants in order to assure the continued safe operation of these plants, and (2) to identify other system characteristics in design of the AFW system for these plants which, on a long term basis, may require system modifications. To accomplish these objectives, we:

(1) Reviewed plant-specific AFW system designs in light of current regulatory requirements, and

(2) Assessed the relative reliability of the various AFW systems under various loss of feedwater transients (one of which was the initiating event at TMI-2) and other postulated potential failure conditions by determining the potential for AFW system failure due to common causes, single point vulnerabilities and human error.

As part of our evaluation, we performed a standard deterministic type of safety review, using as principal guidance the acceptance criteria specified in Section 10.4.9 of the Standard Review Plan (SRP) [1]. In conjunction with this deterministic review, we used event tree and fault tree logic techniques, as part of a reliability analysis to determine dominant failure modes and assess AFW system comparative reliability levels under specified types of transients. When the recommendations identified in this review are implemented, the reliability of the AFW systems for each operating plant should be improved, with the degree of improvement dependent upon whether the AFW systems were initially characterized as having relatively high or low reliabilities (see Section 4.6 of this appendix for details).

The time and personnel limitations imposed on this study precluded a complete and extensive review of each AFW system. The review was based primarily upon information provided by each licensee at a four-hour meeting with the staff review team (composed of a systems engineer and a reliability engineer) to review the as-built AFW system design and operation. Consequently, the results should be viewed in terms of the general conclusions and insights, and not as an absolute reliability analysis of generic or plant-specific AFW systems upon

NOTE: Studies of the AFW systems at Babcock and Wilcox (B&W) designed-operating plants were subjects of separate Commission orders and other work performed by the NRC staff.

which the acceptability of these AFW system designs may be judged. This reliability assessment resulted in the development of generic and plant-specific recommendations to improve AFW system reliability. It was recognized that it would be very difficult and subject to large uncertainty if an attempt was made to quantify the reliability improvement inherent through implementation of the recommended actions. It was decided that such an effort was outside the scope of this study.

Some AFW systems in operating nuclear power plants do not meet all current staff licensing criteria contained in the Standard Review Plan. The degree of conformance varies with the age and specific plant design of the 33 units addressed in this study. For example, 10 architect/engineering organizations were involved in the plant design and construction of these 33 units. A specific objective of this study was to determine whether the lack of conformance with any of these later requirements represented potential safety problems, considering the TMI-2 experience. The recommendations identified in this study reflect areas of potential weaknesses where changes to improve AFW system reliability should be implemented.

The results of the AFW system design review and the evaluation of TMI-2 accident implications were judged to require consideration for corrective action if any one of the following conditions was identified:

(1) Common mode failures (particularly those related to human error),

(2) Single point failures, or

(3) Any dominant causes of AFW system unreliability.

Our limited review focused on the implications of the TMI-2 accident, particularly human errors, and thus we did not reevaluate the design basis for each AFW system, nor did we focus upon all possible system interactions that could affect AFW system reliability. However, if the information suggested a potential for loss of AFW from such causes, this potential was noted during the specific plant reviews, with followup evaluations recommended to determine the need for additional actions.

In determining which safety issues required short-term licensing action versus those that could be deferred for further evaluation, we used simplified engineering evaluations and qualitative judgment of the safety significance of the various issues. In this regard, we recommended actions if their implementation would provide substantial, additional protection required for the public health and safety. The recommended actions were specific and safety-significant in their character, could be implemented in a timely manner, and would not likely be overturned or contradicted by continuing studies or investigations. Some of them may eventually be displaced, however, by more comprehensive long-term changes in nuclear power plant regulation. In some cases, based on information or analysis developed to date, it is not clear that a basis for a decision is available. In such cases, we have judged the item to be of sufficient safety significance to require an early commitment to get studies

or testing under way to provide a basis for resolution of the issue. As required, the recommended action is to obtain a commitment for a longer-term modification, study, or test by affected licensees.

2. PURPOSE AND DESCRIPTION OF AUXILIARY FEEDWATER SYSTEM

The AFW system functions as an emergency system for the removal of heat from the primary system when the main feedwater system is not available. It also plays an important role in mitigating the effects of some design basis events; for example, some small break loss-of-coolant accidents (LOCAs). The AFW system is designed to hold the plant at hot standby, or to cool down the primary system to temperature and pressure levels at which the low pressure decay heat removal system can operate. The AFW system can also be used during normal plant startup and shutdown conditions. AFW systems usually consist of a combination of steam turbine-driven and electric motor-driven pumps. The AFW system can provide, with any one pump out of service, enough water to the steam generators for decay heat removal following loss of main feedwater flow. Table III-1 provides a summary of the pump combinations, flow ratings and modes of initiation for the AFW system for each plant reviewed. Appendix X provides specific AFW system descriptions, a simplified flow sheet for each W operating plant, and an evaluation with corresponding recommendations.

3. DETERMINISTIC EVALUATION

3.1 Background and Objectives

In our review of current applications for construction permits and operating licenses for pressurized water reactors, we evaluate the AFW system to assure that the design conforms to the applicable General Design Criteria (GDC) in Appendix A to 10 CFR Part 50. The General Design Criteria identified in Section 10.4.9 of the Standard Review Plan applicable to the AFW system design are listed below:

(1) GDC 2, "Design Bases for Protection Against Natural Phenomena," as related to structures housing the system, and the system itself being capable of withstanding the effects of natural phenomena such as earthquakes, tornadoes, hurricanes, and floods.

(1) GDC 4, "Environmental and Missile Design Bases," with respect to structures housing the system and the system itself being capable of withstanding the effects of external missiles and internally generated missiles, pipe whip and jet impingement forces associated with pipe breaks.

(3) GDC 5, "Sharing of Structures, Systems, and Components," as related to the capability of shared systems and components important to safety to perform required safety functions.

(4) GDC 19, "Control Room," as related to the design capability of system instrumentation and controls for prompt hot shutdown of the reactor, and potential capability for subsequent cold shutdown.

TABLE III-1. AUXILIARY FEEDWATER SYSTEMS AT WESTINGHOUSE-DESIGNED OPERATING PLANTS AND COMBUSTION ENGINEERING

Westinghouse-Designed Plants

Plant	No. of Pumps/ Type of Drive	Capacity		AFWS Mode of Initiation	Comments
Beaver Valley 1	1-Steam Driven	Steam:	700 gpm @ 2696 ft.	Automatic	
	2-Motor Driven	Motor: (each)	350 gpm @ 2696 ft		
D. C. Cook 1 & 2	1-Steam Driven*	Steam:	900 gpm @ 2714 ft	Automatic	Per unit motor pumps supply both units
	1-Motor Driven*	Motor:	450 gpm @ 2714 ft		
Farley 1	1-Steam Driven	Steam:	700 gpm @ 1268 psig	Automatic	
	2-Motor Driven	Motor: (each)	350 gpm @ 1268 psig		
Ginna	1-Steam Driven	Steam:	400 gpm @ 1131 psig	Automatic	
	2-Motor Driven (normal AFWS)	Motor: (each)	200 gpm @ 1114 psig		
	2-Motor Driven (standby AFWS	Motor:	200 gpm	Manual	
Haddam Neck	2-Steam Driven	Steam:	450 gpm @ 1000 psia	Manual	
H. B. Robinson	1-Steam Driven	Steam:	600 gpm @ 1300 psi	Automatic	
	2-Motor Driven	Motor: (each)	300 gpm @ 1300 psi		
Indian Pt. 2 & 3	1-Steam Driven*	Steam:	800 gpm @ 1350 psig	Automatic	per unit
	2-Motor Driven*	Motor: (each)	400 gpm @ 1350 psig		
Kewaunee	1-Steam Driven	Steam:	240 gpm @ 2850 ft	Automatic	
	2-Motor Driven	Motor: (each)	240 gpm @ 2850 ft		
North Anna 1	1-Steam Driven	Steam:	700 gpm @ 2800 ft	Automatic	
	2-Motor Driven	Motor: (each)	350 gpm @ 2800 ft		
Prairie Island 1 & 2	1-Steam Driven*	Steam:	220 gpm @ 1200 psig	Automatic	Per unit motor pump normally feeds opposite unit steam generators
	1-Motor Driven*	Motor:	220 gpm @ 1200 psig		
Pt. Beach 1 & 2	1-Steam Driven*	Steam:	400 gpm @ 1192 psig	Automatic	Per unit motor pump supplies both units
	1-Motor Driven*	Motor: (each)	200 gpm @ 1192 psig		

*Note: See Comments column

TABLE III-1 (Continued)

Westinghouse-Designed Plants

Plant	No. of Pumps/ Type of Drive	Capacity		AFWS Mode of Initiation	Comments
Salem 1	1-Steam Driven	Steam:	880 gpm @ 1550 psi	Automatic	
	2-Motor Driven	Motor: (each)	440 gpm @ 1300 psi		
San Onofre 1	1-Steam Driven	Steam:	300 gpm @ 1110 psi	Manual	
	1-Motor Driven	Motor:	235 gpm @ 1035 psi		
Surry 1 & 2	1-Steam Driven*	Steam:	700 gpm @ 2730 ft	Automatic	One pump each AFW system can feed opposite unit
	2-Motor Driven*	Motor: (each)	350 gpm @ 2730 ft		
Trojan	1-Steam Driven	Steam:	960 gpm @ 3400 ft	Automatic	
	1-Diesel Driven	Diesel:	960 gpm @ 3400 ft		
Turkey Pt. 3 & 4	3-Steam Driven* for both units	(each)	600 gpm @ 2775 ft	Automatic	One pump normally supplies each unit - 3rd pump is backup for either unit
Yankee Rowe	1-Steam Driven*	Steam:	90 gpm @ 1200 psi	Manual	*charging and safety injection systems serve as backup
Zion 1 & 2	1-Steam Driven*	Steam:	900 gpm @ 3099 ft	Automatic	per unit
	2-Motor Driven*	Motor: (each)	450 gpm @ 3099 ft		

*Note: See Comments column

TABLE III-1 (continued)
AUXILIARY FEEDWATER SYSTEMS

Combustion Engineering-Designed Plants

Plant	No. of pumps/ Type of Drive	Capacity		AFWS Mode of Initiation
ANO	1-Steam Driven	Steam:	575 gpm @ 2800 ft.	Automatic
	1-Motor Driven	Motor:	575 gpm @ 2800 ft.	
Calvert Cliffs 1&2	2-Steam Driven per unit	700 gpm @ 1100 psia each		Manual
Ft. Calhoun 1	1-Steam Driven 1-Motor Driven	Steam: Motor:	260 gpm @ 2400 ft. 260 gpm @ 2400 ft.	Semi-automatic motor-driven pump manually connected to diesel generator
Main Yankee	1-Steam Driven 2-Motor Driven	Steam: Motor: (each)	500 gpm @ 1100 psig 1500 gpm @ 1100 psig	Manual
Millstone 2	1-Steam Driven 2-Motor Driven	Steam: Motor: (each)	600 gpm @ 2437 ft. 300 gpm @ 2437 ft.	Manual
Palisades	1-Steam Driven 1-Motor Driven	Steam: Motor:	415 gpm @ 2730 415 gpm @ 2730 ft.	Manual
St. Lucie 1	1-Steam Driven 2-Motor Driven	Steam: Motor: (each)	500 gpm @ 1200 psi 250 gpm @ 1200 psi	

(5) GDC 44, "Cooling Water," to assure the capability to transfer heat loads from the reactor system to a heat sink under all operating conditions, redundancy of components so that the safety function can be performed assuming a single active component failure, and the capability to isolate components or piping, if required, so that the system safety function will be maintained.

(6) GDC 45, "Inspection of Cooling Water Systems," as related to design provisions made to permit periodic inservice inspection of system components and equipment.

(7) GDC 46, "Testing of Cooling Water System," as related to design provisions made to permit appropriate functional testing of the system and components to assure operability and performance of components, and capability of the integrated system to function as intended during all operating conditions.

In determining whether the AFW system designs for such applications meet these General Design Criteria, the staff uses Section 10.4.9 of the Standard Review Plan and Branch Technical Position ASB 10-1 (hereafter referred to as ASB 10-1) as guidance. These documents contain the acceptance criteria for the AFW system and the review procedures to be used by the staff to determine if these acceptance criteria are met. If the staff concludes that the acceptance criteria are met, then it is also able to conclude that the requirements of the applicable General Design Criteria are satisfied.

It was recognized at the outset of this assessment of operating plants that many of these plants do not meet each of the acceptance criteria of the Standard Review Plan, including Section 10.4.9 and ASB 10-1, which relate to the AFW system design. This situation exists because the operating licenses for many of these plants were issued prior to the publication of the Standard Review Plan and, for some of these plants, prior to the publication of the General Design Criteria in February 1971.* The Standard Review Plan was originally issued in November 1975 and revised in 1978.

When the staff issues new or revised regulatory requirements and guidance, it addresses whether the new or revised requirements or guidance should be backfitted to operating plants, as well as plants undergoing licensing review. This decision is guided by Section 50.109 of 10 CFR Part 50 of the Commission's regulations. This regulation states that, if a finding is made to the effect that new requirements provide substantial, additional protection which is required for public health and safety, they are to be backfitted on plants with operating licenses (operating plants). Such a finding has not been made for several requirements contained in SRP Section 10.4.9, which applies to AFW systems. Consequently, as noted above, the AFW systems at some operating plants do not meet all of the requirements imposed on later designs.

*Althouth the GDC were promulgated as part of 10 CFR Part 50 in 1971, the basic safety consideration embodied in the GDC had been in general use from the early 1960's.

It should be noted that AFW system designs which do not meet the criteria in the Standard Review Plan are not necessarily in conflict with the General Design Criteria. Deviations from the Standard Review Plan may be justified (even on new plants) provided that an acceptable level of protection is provided in the overall plant design. Prior to our assessment, specific documentation of deviations from the Standard Review Plan, Section 10.4.9, and ASB 10-1 had not been required for all operating plants.

It is against this background that we developed guidelines for the deterministic review of AFW system designs for operating plants. These guidelines are provided below:

(1) Determine the extent to which the AFW system designs meet the criteria of the current Standard Review Plan.

(2) Where AFW system designs do not meet the Standard Review Plan criteria, determine whether changes can be identified that will significantly upgrade the auxiliary feedwater system in operating plants to make them less susceptible to single point failures, human errors, and common mode failures.

(3) Recommend areas of the AFW system design to be evaluated for longer-term improvements in the reliability of AFW system designs.

4. RELIABILITY EVALUATION

4.1 Background and Objectives

The General Design Criteria (GDC) contained in Appendix A to 10 CFR Part 50 provide minimum requirements to be satisfied in the design of nuclear power plants. As such, the GDC provide the basis for the staff's deterministic review of the design features of nuclear power plants, including those of the auxiliary feedwater (AFW) systems. Towards this end, the Standard Review Plan provides criteria and supplemental guidance to the staff for assuring conformance with the GDC, including those applicable to AFW systems. However, to provide additional insight regarding the potential for failures of the AFW system not covered by the Standard Review Plan, the reliability assessments discussed below were performed.

The TMI-2 accident demonstrated that human errors of commission or omission can lead to failures of redundant and diverse AFW system equipment to perform as designed. Thus, the TMI-2 experience tends to confirm past studies[2] indicating human errors are dominant factors[3] in reactor accidents.

Currently, a variety of AFW system designs are being used in the 33 operating plants using W- and CE-designed reactors. This factor gives rise to a variety of hardware dependencies and possible vulnerabilities brought about by human interaction with the design, or possibly some other common influences that could affect AFW system operation. Past studies[2,3] have provided useful engineering insights into those areas of system design where human interactions could significantly affect the availability of standby safety systems. The afore-

mentioned past studies have also provided additional insights for the more probable transient events that tend to dominate the demand for successful operation of the AFW systems.

The reliability assessment approach used and the principal insights and results are summarized below. The comparative reliabilities of the AFW system for the 33 W- and CE-designed operating reactors were evaluated for three different initiation events and are shown in Figure III-4. Figure III-5 presents the comparative reliabilities of the AFW systems for each of the 25 W-designed operating reactors. The results shown in Figures III-4 and III-5 indicate that the reliabilities of the existing AFW system design vary by at least an order of magnitude. The dominant contributors to this variability in reliability were, in general, human errors and single point vulnerabilities as described later. Plant-specific details on these AFW system designs are provided in Appendix X.

4.2 Reliability Assessment Approach and Scope

Reliability techniques and insights were used in this assessment to supplement the more traditional deterministic type of safety review. The principal techniques used in this assessment included the event-tree and fault-tree logic techniques. These techniques are considered[4,5] to represent an acceptable approach in establishing the priorities for the resolution of generic safety issues. These techniques, and the insights derived by use of such logic, have been employed recently to perform a risk-based categorizing and screening of the various generic safety issues.[6]

Accordingly, the staff used the aforementioned techniques to focus on those potential failures that could dominate the unreliability of AFW systems during the following transients.

4.2.1 Loss of Main Feedwater

This transient involves the interruption of the main feedwater flow and the subsequent tripping of the reactor. Reactor experience suggests that about three interruptions of the main feedwater system may be experienced from a number of causes each reactor year.*

4.2.2 Loss of Main Feedwater Due to and Loss of Offsite Power

This transient is initiated by the loss of offsite power which, in turn, causes the interruption of the main feedwater system and the tripping of the reactor. Reactor experience suggests that the main feedwater system may be interrupted by this transient approximately 0.2 to 0.3 times per reactor year.*

*This number may appear to conflict with the information presented in Table II-4 in Appendix II. As was noted in Section 6 of that appendix, the events listed in Table II-4 represent a minimum frequency of loss of feedwater events, since other initiating events which resulted in a loss of feedwater may not have been included.

4.2.3 Loss of Main Feedwater and Loss of All Alternating Current Power (Station a c Blackout).

This event is initiated by the loss of offsite power, as is the previous transient discussed in 4.2.2 above, except that the onsite emergency alternating current (ac) power sources are also lost. Thus, this scenario represents a significantly degraded case compared to that described in 4.2.2 above. However, since this event requires the concurrent loss of all onsite ac power sources (e.g., usually two diesel-engine generators), its likelihood of occurrence should be orders of magnitude less. This low probability of occurrence notwithstanding, reactor experiences have revealed some precursors to this scenario. For example, in a few instances, all ac power has been lost for periods less than five minutes, thereby encroaching on the time to boil the steam generators dry. In another instance, only one of the redundant onsite emergency ac power sources was available for a period of about 50 minutes. Thus, if for some reason the operating ac source were to fail during this 50-minute interval, this scenario could have occurred.

The ability to cope with this event was not a licensing requirement for the earlier licensed plants. However, the more recently licensed plants, as well as those currently undergoing construction permit or operating license reviews, have been required to provide AFW system designs capable of functioning upon the loss of all ac power. Additionally, the decision whether or not this transient should be a plant design basis, and for what period of time this condition would be assumed to exist, is being reviewed as an unresolved safety issue under Generic Task Action Plan A-44 (7). Because of the above considerations, the ability of each operating plant's AFW system to cope with this transient was included in this assessment.

4.3 Generic Event Trees

The inductive logic used in evaluating the relative reliabilities of the various AFW systems involved the use of generic event trees. The dominant failures affecting the availability of the various AFW system designs for each of the three transients were assessed on a conditional basis rather than on an overall probability basis; i.e., the reliability of each AFW system was calculated, given that the applicable transients described above had occurred. Figure III-1 illustrates an event tree applicable to many of the current AFW system designs. Although this event tree does not contain all the various systems that may become involved over the course of the transient, it illustrates possible accident sequences and outcomes that could result. The heavily shaded sequence illustrates one of the loss of main feedwater transients described above that demands successful operation of the AFW system. The time interval of interest for all the transient events considered is the unavailability of AFW systems during the period of time to boil the steam generators dry. Beyond this interval, primary coolant would be discharged via pressurizer relief and/or safety valves and thereby be lost from the primary coolant system. Without the satisfactory operation of primary coolant makeup systems (e.g., high pressure injection systems), the reactor core could be uncovered and eventually damaged. Further, as this boil-dry time is approached, the ability to drive the steam turbine-driven pumps AFW could be lost. If the AFW system

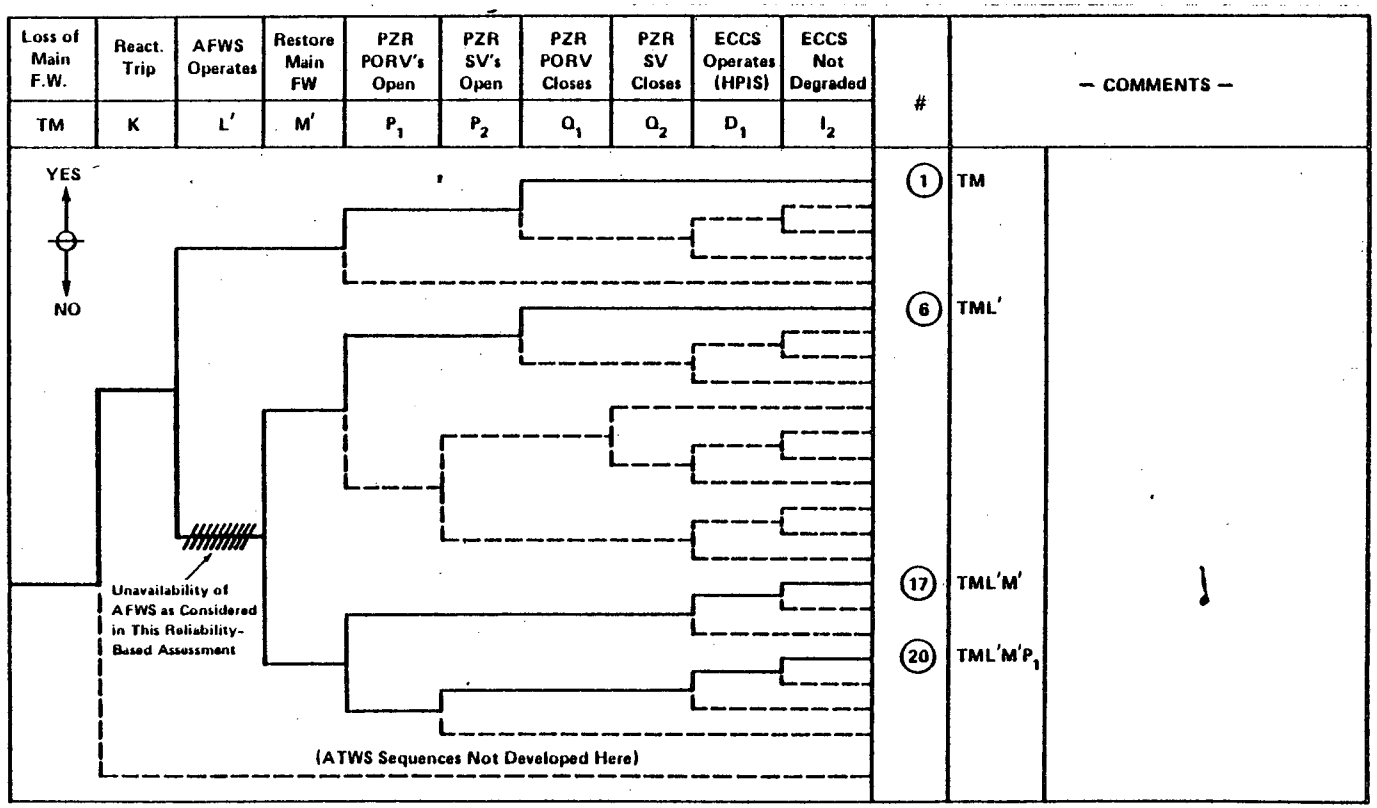

Figure III-1 Example Event Tree: Transient Involving Loss of Main Feedwater – Offsite AC Power Available. (Case of LMFW)

design contains only steam turbine-driven pumps, or if the transient is such that only this AFW subsystem is available, and if the boil-dry time is approached, then the likelihood of initiating AFW system operation would be reduced significantly.

4.4 Fault Tree Logic Approach

The deductive logic used in evaluating the relative reliabilities of the various AFW systems was based on the Boolean logic associated with fault trees. A simplified or reduced fault-tree approach was used to estimate the unavailability of AFW systems to a demand. In this assessment, unavailability was taken as being synonomous with the unreliability. This approach relied on the engineering insights available through applications of the system fault trees in the Reactor Safety Study (WASH-1400)[2], and on subsequent work undertaken on additional light water reactor designs. This latter work was based on a system survey and analysis technique[8] where reduced and simplified fault tree logic was used to estimate the dominant system failures and overall system unavailability.

Figures III-2 and III-3 illustrate the simplified fault tree logic for an AFW system design. Each fault tree identifies the principal failures expected to have the most influence on the unavailability of the AFW system for the specific transient event identified in the figure. To assist in characterizing the reliability of the various AFW system designs and to help in identifying the more likely failures that could affect the various designs, quantitative estimates were made from the fault tree logic structure. Toward this end, a specific data base was compiled and used to generate best estimate failure probabilities and human error potentials considered to be applicable to those components and human interactions over the range of the AFW system designs.* A principal reason for compiling this best estimate type of data base was to assure that the quantitative estimates of reliability derived from the fault trees could be used to compare the relative reliabilities of the various AFW system designs. This was possible because the data were consistently used over the range of the AFW system designs by all of the reliability engineers who were involved in the fault analyses. The data base and its use in a fault tree logic structure are described briefly below.

4.5 Data Base and Application

Table III-2 presents data compiled specifically for conducting this AFW system generic assessment. The component failure and human errors probabilities presented in Table III-2 represent current best estimates. The component failure rates were derived from several sources, including the Reactor Safety Study (WASH-1400)[2] and ongoing NRC data assessment programs. The various human error probabilities were derived from both the Reactor Safety

*Evaluating the variability in AFWS designs was the principal aim in this assessment rather than evaluating variability in data to be applied to a specific design.

Figure III-2 Simplified Fault Tree Logic Structure — LOFW Transient.

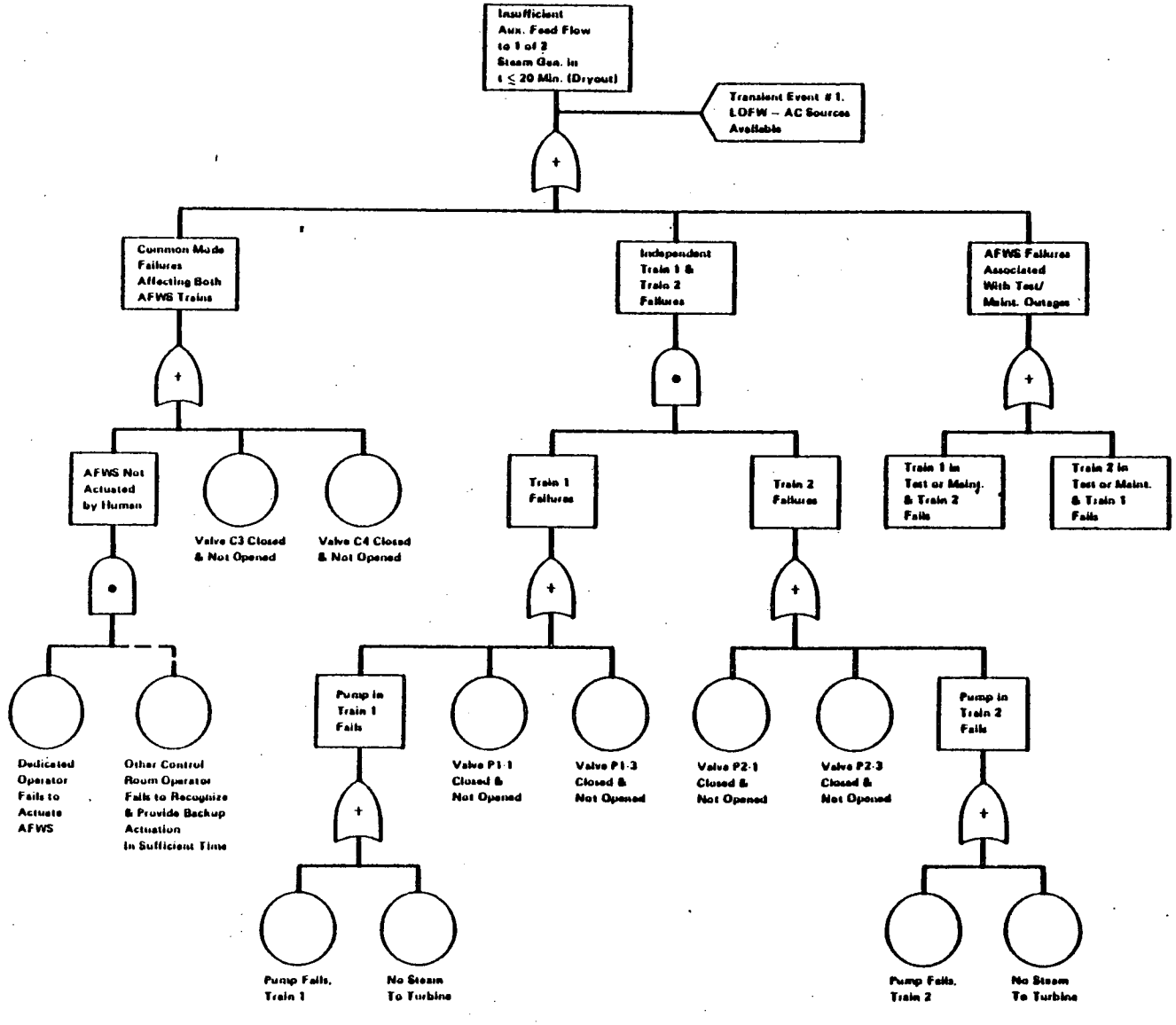

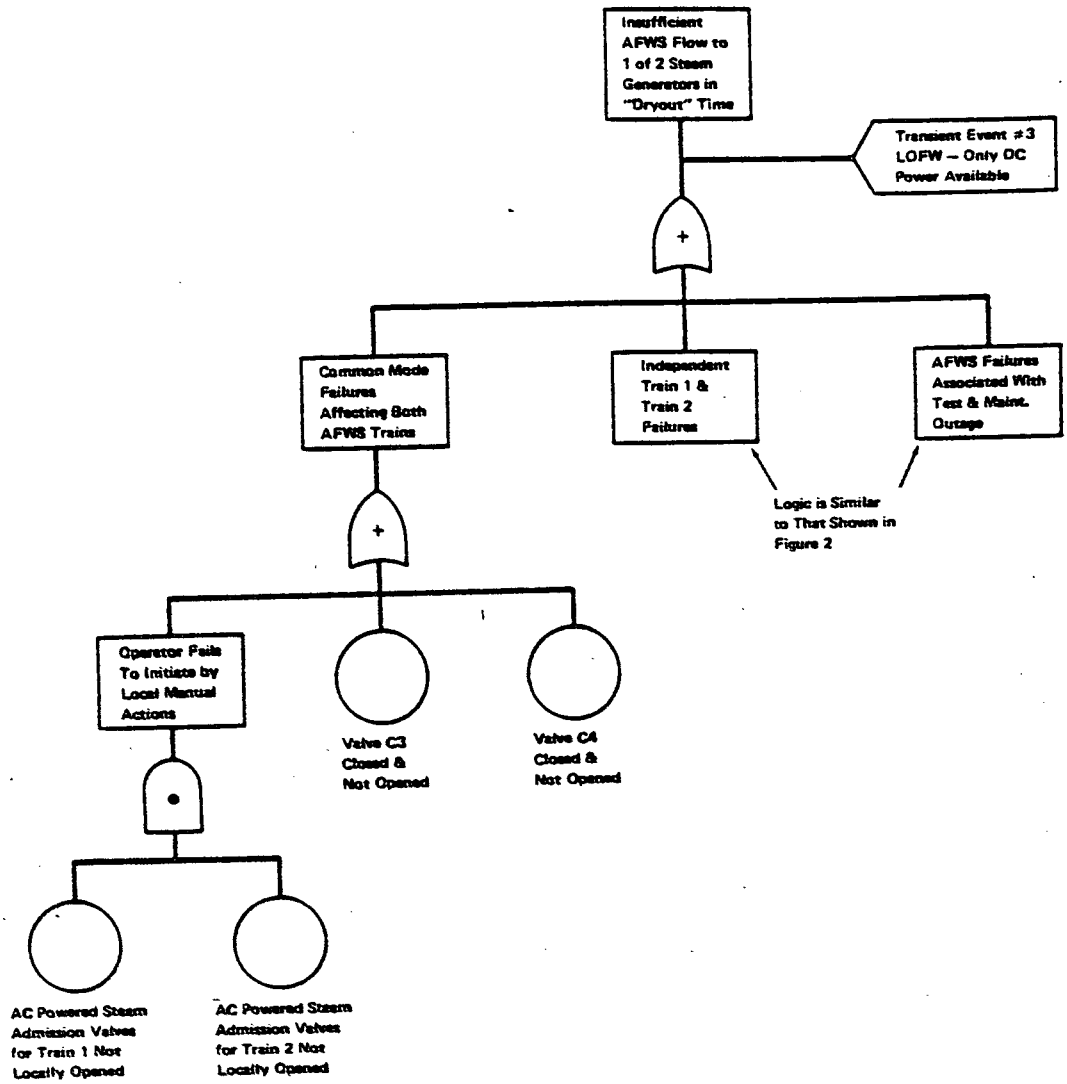

Figure III-3 Simplified Fault Logic Structure – LOFW Transient, Only DC Power Available.

TABLE III-2

BASIC DATA USED FOR PURPOSES OF CONDUCTING
A COMPARATIVE ASSESSMENT OF EXISTING
AFWS DESIGNS & THEIR POTENTIAL RELIABILITIES

	Point Value Estimate of Probability of* Failure on Demand
I. Component (Hardware) Failure Data	
a. Valves:	
Manual Valves (plugged)	$\sim 1 \times 10^{-4}$
Check Valves	$\sim 1 \times 10^{-4}$
Motor Operated Valves	
. Mechanical Components	$\sim 1 \times 10^{-3}$
. Plugging Contribution	$\sim 1 \times 10^{-4}$
. Control Circuit (local to Valve)	
w/quarterly tests	$\sim 6 \times 10^{-3}$
w/monthly tests	$\sim 2 \times 10^{-3}$
Piston Actuated Valves	
. MOV-Mechanical Components	$\sim 3 \times 10^{-4}$
. SOV-Mechanical Components	$\sim 1 \times 10^{-3}$
. Control Circuit (Note: Use MOV Failure Rate if Valve is not Fail Safe)	ε**
b. Pumps: (1 Pump)	
. Mechanical Components	$\sim 1 \times 10^{-3}$
. Control Circuit (Local to Pump - applies to Electrical Pumps)	
w/Quarterly tests	$\sim 7 \times 10^{-3}$
w/Monthly tests	$\sim 4 \times 10^{-3}$
c. Actuation Logic (Assumes at least 1 of 2 logic)	$\sim 7 \times 10^{-3}$/train

*Error factors of 3-10 (up and down) about such valves are not unexpected for basic data uncertainties.

**ε represents a number so small in magnitude that it may be neglected for basis of this study.

TABLE III-2 (Continued)

II. TEST & MAINTENANCE OUTAGE CONTRIBUTIONS:

a. Calculational Approach

1. Test Outage

$$Q_{TEST} \approx \frac{(\#hrs/test)\ (\#tests/year)}{\#hrs/year}$$

2. Maintenance Outage

$$Q_{MAINT.} \approx \frac{0.22\ (\#hrs/maint.\ act)}{720}$$

b. Data Tables for Test & Maint. Outages*

SUMMARY OF TEST ACT DURATION

Component	Range on Test Act Duration Time, hr	Calculated Mean Test Act Duration Time, t_D, hr
Pumps	0.25 - 4	1.4
Valves	0.25 - 2	0.86
Diesels	0.25 - 4	1.4
Instrumentation	0.25 - 4	1.4

LOG-NORMAL MODELED MAINTENANCE ACT DURATION

Component	Range On Duration Time, hr	Mean Act Duration Time, hr
Pumps	1/2 - 24	7
	1/2 - 72	19
Valves	1/2 - 24	7
Diesels	2 - 72	21
Instrumentation	1/4 - 24	6

* Note: These data tables were taken from the Reactor Safety Study (WASH-1400)[2] for purposes of this AFW system assessment. Where the plant technical specifications placed limits on the outage duration(s) allowed for AFW system trains, this tech spec limit was used to estimate the mean duration times for maintenance ACPS. In general, it was found that the outages allowed for maintenance dominated those contributions to AFW system unavailability from outages due to testing.

TABLE III-2 (Continued)

III. Human Acts & Errors - Failure Data:

	Estimated Human Error/Failure Probabilities Modifying Factors & Situations					
		With Valve Position Indication in Control Room		With Local Walk-Around & Double Check Procedures		W/O Either
	Point Value Est	Est. on Error Factor	Point Value Est	Est. on Error Factor	Point Value Estimate	Est On Error Factor
a. Acts & Errors of A Pre-Accident Nature						
1. Valves Mispositioned During Test/Maint						
(a) Specific Single Valve Wrongly Selected out of A Population of Valves During Conduct of a Test or Maintenance Act (X No. of Valves in Population at Choice)	$\frac{1}{20}$ " 10^{-2} " $\frac{1}{X}$	20	$\frac{1}{2}$ " 10^{-2} " $\frac{1}{X}$	10	10^{-2} " $\frac{1}{X}$	10
(b) Inadvertently Leaves Correct Valve in Wrong Position	N5 x 10^{-4}	20	N5 x 10^{-3}	10	N10^{-2}	10
2. More than one valve is affected (coupled errors)	N1 x 10^{-4}	20	N1 x 10^{-3}	10	N3 x 10^{-3}	10
3. Miscalibration of Sensors/Electrical Relays						
(a) One Sensor/Relay Affected	-	-	N5 x 10^{-3}	10	N10^{-2}	10
(b) More than one Sensor/Relay Affected	-	-	N1 x 10^{-3}	10	N3 x 20^{-3}	10

TABLE III-2 (Continued)

	Time Actuation Needed	Estimated Failure Prob. for Primary Operator to Actuate AFWS	Estimated Failure Prob. of other (Backup) Control Rm. Operator to Actuate AFWS	Overall Estimate of Failure Probability	Estimated Error Factor on Overall Probability
b. Acts & Errors of a Post-Accident Nature					
1. Manual Actuation of AFW system from Control Room					
(a) Considering "Dedicated" Operator to Actuate AFW system and Possible Backup Actuation of AFWS	N5 min.	N2 x 10^{-3}	-	N2 x 10^{-3}	10
	N15 min.	N1 x 10^{-3}	N0.5 (mod. dep.)	N5 x 10^{-4}	10
	N30 min.	N5 x 10^{-4}	N.25 (low dep.)	N10 x 10^{-4}	10
(a) Considering "Non-Dedicated" Operator to Actuate AFW system and Possible Backup Acutation of AFW system	N5 min.	N5 x 10^{-2}	-	N5 x 10^{-2}	10
	N15 min.	N1 x 10^{-2}	N0.5 (mod. dep.)	N5 x 10^{-3}	10
	N30 min.	N5 x 10^{-3}	N.25 (low dep.)	N10 x 10^{-3}	10

Study and from discussions with recognized experts in the field of human behavior and reliability at Sandia Laboratories. The Sandia experts are presently working with NRC's Office of Nuclear Regulatory Research on human factors-related programs.

The best estimate data in Table III-2 are subject to considerable uncertainty, and may have error spreads of an order of magnitude on either side of the data. Hence, although the data base may be used to obtain relative reliabilities, care must be taken in ascribing a high degree of numerical precision to these values [5] or to results derived from their use. Because of this, any relative values for AFW system reliability presented herein should not be interpreted to have a high degree of precision. The data from Table III-2 were applied* to the fault logic structure in order to obtain relative comparisons of reliability of the various AFW system designs. It was found that the various AFW system designs did exhibit considerable variability with regard to design approach and in their human influences. For example, some AFW systems include three feedwater pumps (two electric motor-driven and one steam turbine-driven), are automated, and no single point vulnerability was identified in our review. In contrast, some AFW systems have two pumps and are not automated, thereby having a strong dependence on human influences for their performance. In addition, some of these designs also have single point vulnerabilities that could potentially negate the two train AFW system redundancy (e.g., a single manual valve). Clearly, one might reasonably expect to find a significant variance in reliability between such designs without having available an abundance of data of great precision.

4.6 Summary of Reliability-Based Results (Generic)

Figure III-4 illustrates the results of the generic AFW system reliability assessment. As can be seen from Figure III-4, preliminary assessments of the reliabilities of the AFW system designs range from high to low. On a more quantitative basis, this range depicts differences in reliability of the existing AFW systems of more than an order of magnitude for each of the three transients considered in this assessment. Each column in Figure III-4 depicts the relative reliability of the various system designs for a particular transient.

Plant-specific and generic recommendations to improve on and strengthen AFW system reliability were developed as part of this overall study and are presented in Section 5 of this appendix. These recommendations reflect the engineering insights derived from this reliability evaluation as well as those derived from the deterministic evaluation. The

*The data was applied to the various identified faults in the fault logic structure and a point value estimate was determined for the top fault event (i.e., AFW System unavailability). Such an approach is considered adequate to gain those engineering and reliability based insights sought for this AFW System reassessment. As noted, no attempt was made to introduce the somewhat time consuming, calculational elegance, associated with the process of error propagation into this assessment (e.g., Monte Carlo). Prior experience with such a calculational process has revealed a somewhat predictable outcome that, even with the very redundant systems, could be slightly higher than the point value solution (e.g., factor of approximately three times higher than the point value and usually less). Should there exist a clearly overwhelming fault in a systems design, then the process of error propagation would be expected to be merely one of higher elegance and it would yield no important change to the quantitative solution.

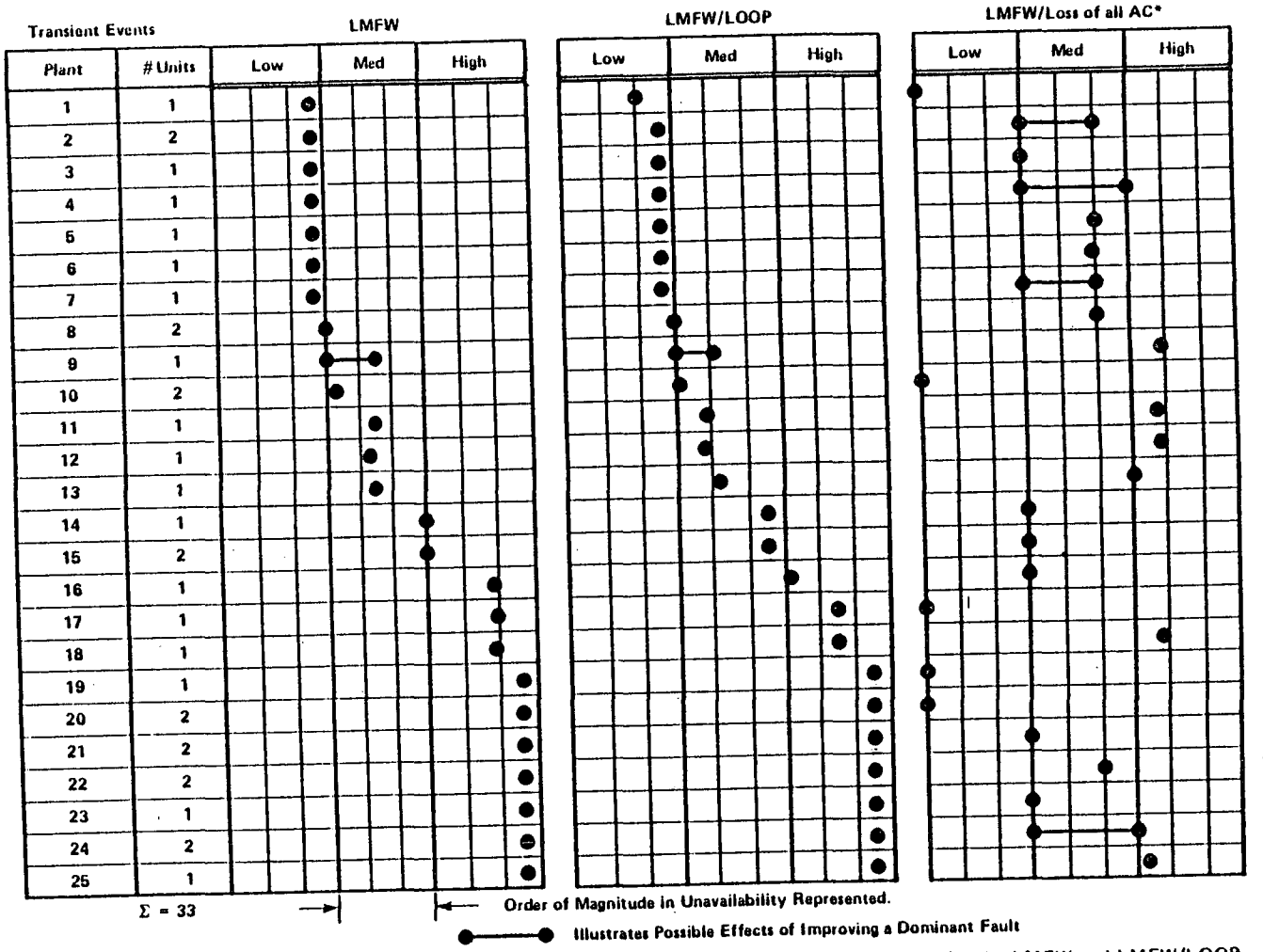

*Note: The scale for this event is not the same as that for the LMFW and LMFW/LOOP.

Figure III-4 A Generic Perspective: Comparisons of AFWS Reliability.

recommendations derived from the reliability evaluation generally tend to reduce human error potentials and other dominant failures, and are proposed for all AFW system designs as applicable for all of the AFW system designs regardless of whether these designs are characterized as having a relatively high or low reliability. The three transients used in the assessment are described in detail below.

4.6.1 Loss of Main Feedwater (First Column, Figure III-4)

Approximately eight units were identified as having AFW systems with relatively low reliability for this transient. These AFW system designs generally require manual actuation and include two pumps in their design. Some were found to have single point vulnerabilities such as a single manual valve through which all AFW flow passes (typically a maintenance valve), where human error possibility was generally found to be the dominant common mode failure contributor. In some cases, deficiencies in Technical Specifications are the principal contributor to unavailability; e.g., limits were not imposed on the allowed outage interval for an AFW system train. Where such a deficiency was identified, the reliability of the AFW system could be adversely affected if one of the trains was to be allowed to be inoperable for an extended period of time. In general, for the eight units characterized as having a relatively low AFW system reliability for this transient, the dominant failure is the failure to manually initiate the AFW system. Plants requiring manual AFW system initiation are presently required, by recent IE Bulletins[9,10] to provide a dedicated individual to manually actuate the AFW system upon loss of main feedwater. The results presented in Figure III-4 consider only the reliability of this dedicated individual to actuate the AFW system. It is likely that, in the event that this dedicated individual fails to perform the AFW system actuation, backup would be provided by licensed reactor operators in the control room. Discussions with experts on human reliability indicate that the chance of failing to actuate the AFW system from the control room might be reduced by a factor of two to four by the backup operator, depending on the time window available (see data tables). If this potential for improved human reliability were to be factored into the Figure III-4 results, then other potential failures, such as the single valve vulnerabilities, could become the dominant contributors to the unavailability of AFW systems. Therefore, the net benefit in AFW system unavailability might be limited to the aforementioned factor of two, unless the next level of dominant failure modes were to be improved upon. The degree to which such successive improvements might further improve AFW system reliability was beyond the present work scope. However, recommendations are made in Section 5 of this appendix that should improve these next levels of dominating faults, such as the single manual valve.

Those AFW system designs that could be characterized as being of medium reliability generally were automatically actuated with manual backup. However, single point vulnerabilities were identified which would limit the reliability. Other factors, such as the lack of specific limitations on allowed AFW train outage time and limitations on AFW flow rate to the steam generators because of water-hammer concerns, could have an adverse effect on the AFW system redundancy and thus limit the achievable reliability. Improvements in these areas would serve to further improve reliability of these AFW system designs.

Approximately 16 units were characterized as having high AFW system reliability. These AFW system designs were generally of high redundancy and had no observed single point vulnerabilities. Consequently, the reliability of these designs would be expected to be limited by human interactions that could adversely affect the installed hardware redundancy. For example, some periodic tests of AFW systems are conducted in ways that could invalidate AFW system redundancy. Usually, such tests are not staggered (i.e., each redundant component of the AFW system is tested by the same personnel and on the same shift) such that if identical human errors were to be made on redundant components the entire AFW system could be made ineffective. The net result is that the effect of these human errors could persist until the next test interval, at which time the errors should be detected. To reduce such potential vulnerabilities, recommendations were made for strengthened administrative controls (e.g., improved valve locking procedures) and considerations are being given for staggering tests of the individual AFW system trains, such that only one train would be tested on any given shift. Additional insights derived from this evaluation suggest that the quality of periodic testing, as well as of the AFW system design, should be improved. For example, testing programs that incapacitate more than one train of the AFW system should be revised so that the periodic tests demonstrate availability of flow path to the steam generators rather than negate the flow path.

4.6.2 Loss of Main Feedwater Due to Loss of Offsite Power (Second Column, Figure III-4)

The reliabilities of the various AFW system designs for this transient were generally found to be quite similar to those for the previous transient, i.e., loss of main feedwater. Onsite ac power sources were considered and the potential impact of degrading these power sources (e.g., the loss of one of the two emergency diesel-generators) on the AFW system reliability was estimated. Depending on the AFW system design and on the ac power dependencies identified, variable impacts were estimated. However, these variations generally were not dominant failure modes, and were similar to those previously described for the loss of main feedwater transient.

4.6.3 Loss of Main Feedwater and Loss of All Alternating Current Power (Station ac Blackout), (Third Column, Figure 4)

This assessment carried postulated degradation of the ac power sources one step further than the loss of main feedwater and the loss of offsite power. All ac power sources were assumed unavailable, and the ac dependencies of the AFW system were explored. In general, the steam turbine-driven pump of the AFW system was the only potentially operable system for this scenario. Some of the AFW system designs have only steam turbine-driven pumps. Therefore, these designs potentially have greater available redundancy for this scenario. The relative reliability of the various AFW system designs varied by more than an order of magnitude for this transient. Seven reactor units were characterized as having relatively low reliabilities for this transient. These particular AFW system designs did not necessarily follow their prior characterizations in Columns 1 and 2 of Figure III-4. This difference is due to the strong ac dependencies which exist in the steam turbine-driven train of their AFW system. All seven units depend on ac power to provide lube oil cooling for the steam turbine-driven

pump. Without this lube oil cooling, it was assumed that the pump would overheat and eventually fail due to shaft/seal/bearing failures. Estimates on when pump failure might occur vary, but it was assumed to occur in a relatively short time interval. As a consequence, those AFW systems having this ac power dependency were judged to have a low reliability for this event. However, it should be noted that preliminary results from a subsequent test at an operating plant indicated that the effect of losing lube oil cooling may not be as rapid as assumed in this evaluation. Most of the turbine- driven pumps of the AFW systems use AFW flow to cool the lube oil.

Several AFW system designs have valves that depend on ac power for operation. In contrast to those AFW systems having the lube-oil cooling ac power dependencies described above, these AFW systems can be successfully operated by manually opening the valves. Generally, these AFW system designs are characterized in Figure III-4 as having a low-to-medium reliability. The nature of the valves' dependencies on ac power varied between the designs. For example, certain designs were found to have ac-operated steam admission valves designed to fail closed on loss of air supply to the valves. Since, on loss of ac power, the air supply to these valves could be depleted in about one-half hour, the operator would be required to take additional manual actions to reopen and maintain the admission valves open, until ac power and/or an air supply could be restored. Other plants also have AFW system designs characterized as having low-to-medium reliabilities. Such plants generally include valves that are dependent on ac power. However, the access conditions are such that they reduce the likelihood of successful local manual actions being taken. Some designs were also characterized in this low-to-medium reliability range because no specific limitations existed on the allowed train outage times, a factor that represents an important contributor to the AFW system unavailability.

Those AFW system designs that were characterized as having a relatively high reliability for this transient generally had no identifiable ac power dependencies and were automatically actuated. For these designs, the dominant fault contributors were those associated with hardware failures, which could not be rectified in a timely way by manual actions.

4.7 Reliability Characterizations of AFW Systems in Plants Using Westinghouse-Designed Reactors (Plant-Specific)

Figure III-5 characterizes the results of this reliability assessment of the AFW system designs in operating plants using W-designed reactors. The operating history of these plants represents a cumulative experience of about 150 reactor years. As has been discussed previously, the AFW system designs with low reliabilities for the loss of main feedwater transient were generally dominated by human errors in the manual actuation of the AFW system, or by errors associated with single manual valves in the system. Those of higher reliability were also generally dominated by human influences, which could affect the redundant aspect of the AFW system design. In general, the majority of these AFW system designs are of a configuration that includes three AFW pumping systems which are not vulnerable to single point failures. Therefore, they were assessed to be of relatively high reliability.

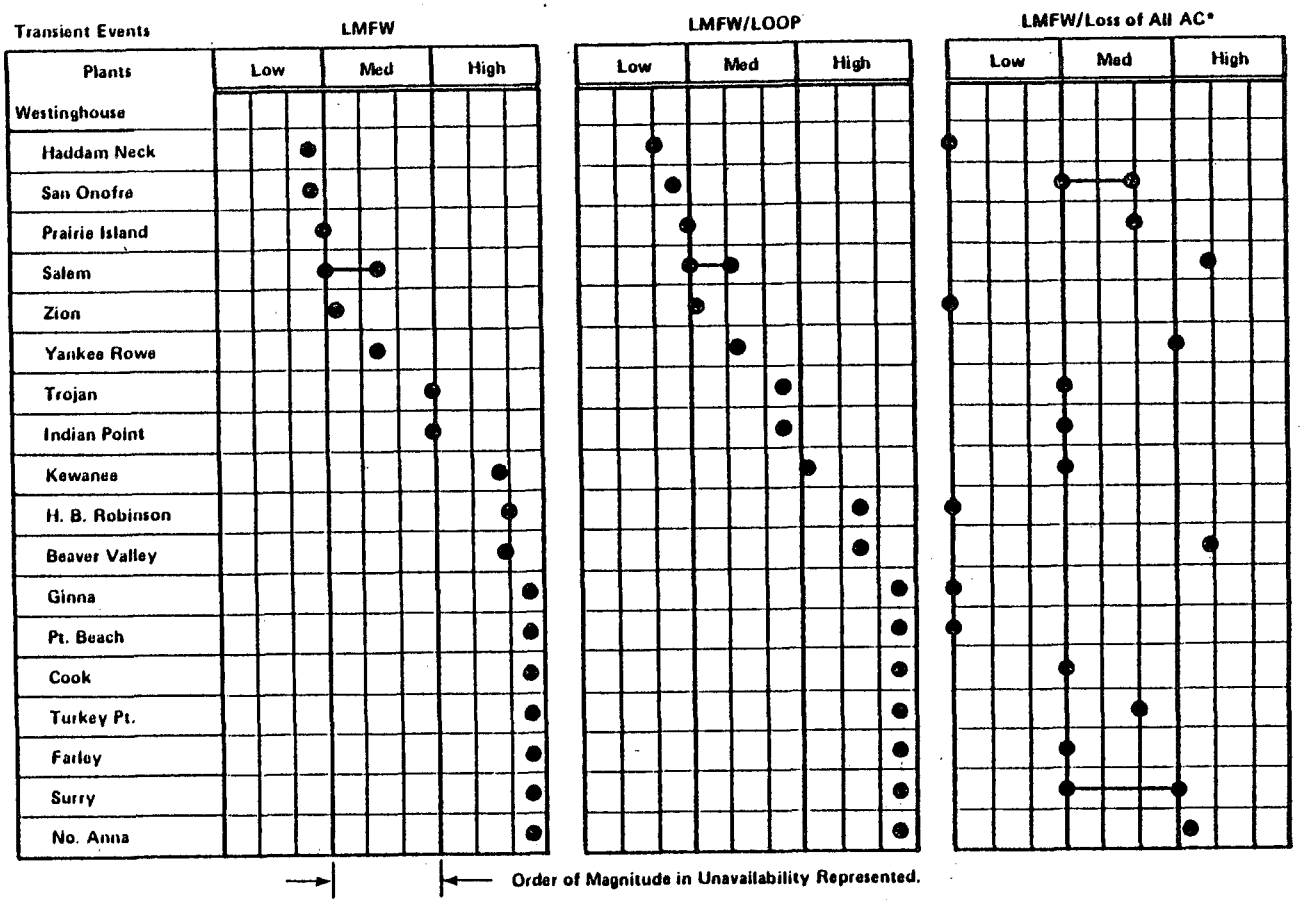

*Note: The scale for this event is not the same as that for the LMFW and LMFW/LOOP.

Figure III-5 Reliability Characterizations for AFWS Designs in Plants Using the Westinghouse NSSS.

In connection with the loss of main feedwater transient and the loss of all ac power, there is a significant variation in the reliability of the various AFW system designs. This variation is attributed to differences in the design of the AFW systems previously discussed. Those plants having an ac power dependency (e.g., lube oil cooling to the steam turbine-driven AFW pump) have the lowest AFW system reliability for this transient. Accordingly, recommendations are made to eliminate power dependencies which could result in pump failure within a short time interval.

Our assessment of each of the plants listed in Figure III-5 is described in Appendix X.

The reliability assessment approach used and the principal insights and results are summarized below. The results shown in Figures III-4 and III-5 indicate that the reliabilities of the existing AFW system designs vary by at least an order of magnitude. The dominant contributors to this variability in reliability were, in general, human errors and single point vulnerabilities, as described later in this appendix.

5. SUMMARY OF RESULTS AND RECOMMENDATIONS

This section presents in summary form the results of the AFW system review and recommendations that should be implemented to improve the performance and reliability of the AFW systems of the various W-designed operating plants. Appendix X provides a separate AFW system description, evaluation, and recommendations for each individual plant.

5.1 Recommendation Categories

The recommendations are categorized as generic and plant-specific, as well as short-term and long-term. The generic recommendations (designations GS and GL refer to generic short- and long-term, respectively) are a result of similarities in AFW system potential problems between plants and are applicable to more than one plant. The generic recommendations and the concerns which led to these recommendations are described in this section. There are also plant-specific recommendations that are unique to a given plant's AFW system. The plant-specific recommendations are addressed more fully in the individual plant evaluations in Appendix X.

The short-term recommendations represent actions to improve AFW system reliability that should be implemented by January 1, 1980, or as soon thereafter as is practicable. In general, they involve upgrading of Technical Specifications or establishing procedures to avoid or mitigate potential system or operator failures. The long-term recommendations involve system design evaluations and/or modifications to improve AFW system reliability and represent actions that should be implemented by January 1, 1981, or as soon thereafter as is practicable. This implementation schedule is intended to be consistent with the schedule for implementation of the requirements specified in NUREG-0578 [13]. If conflicts should arise; the schedule specified in NUREG-0578 takes precedence.

There are two significant limitations of the AFW system review and evaluation which should be noted, as well as their effect on the recommendations.

(1) While our review covered the classification and divisional redundancy of power sources for AFW system equipment and instrumentation and controls and the type of instrumentation and controls provided for the overall AFW system, we did not attempt to review detailed logic and control diagrams. This explains in part the conservative approach we used in applying to all plants the short and long-term generic recommendations GS-7 and GL-5, which deal with non-redundant and non-Class 1E circuitry for AFW system automatic initiation systems.

(2) The review is not considered to be a complete evaluation of postulated high energy pipe breaks that could affect the AFW system, since piping isometric and plant arrangement drawings were not reviewed. However, where system flow sheets revealed potential pipe breaks that could cause total loss of AFW system capability, these problem areas have been identified and included in the long-term recommendations for further evaluation.

5.2 Short-Term Generic Recommendations

5.2.1 Technical Specification Time Limit on AFW System Train Outage

Concern

Several of the plants reviewed have Technical Specifications that permit one of the AFW system trains to be out of service for an indefinite time period. Indefinite outage of one train reduces the defense-in-depth provided by multiple AFW system trains.

Recommendation GS-1 - The licensee should propose modifications to the Technical Specifications to limit the time that one AFW system pump and its associated flow train and essential instrumentation can be inoperable. The outage time limit and subsequent action time should be as required in current Standard Technical Specifications; i.e., 72 hours and 12 hours, respectively.

5.2.2 Technical Specification Administrative Controls on Manual Valves - Lock and Verify Position

Concern - Several of the plants reviewed use a single manual valve or multiple valves in series in the common suction piping between the primary water source and the AFW system pump suction. At some plants the valves are locked open, while at others, they are not locked in position. If the valves are inadvertently left closed, the AFW system would be inoperable, because the water supply to the pumps would be isolated. Since there is no remote valve position indication for these valves, the operator has no immediate means of determining valve position.

Further, the Technical Specifications for plants with locked-open manual valves do not require periodic inspection to verify that the valves are locked and in the correct

position. For most plants where the valves are not locked open, valve position is verified on some periodic basis.

Recommendation GS-2 - The licensee should lock open single valves or multiple valves in series in the AFW system pump suction piping and lock open other single valves or multiple valves in series that could interrupt all AFW flow. Monthly inspections should be performed to verify that these valves are locked and in the open position. These inspections should be proposed for incorporation into the surveillance requirements of the plant Technical Specifications. See Recommendation GL-2 for the longer-term resolution of this concern.

5.2.3 AFW System Flow Throttling-Water Hammer

Concern - Several of the plants reviewed apparently throttle down the AFW system initial flow to eliminate or reduce the potential for water hammer. In such cases, the overall reliability of the AFW system can be adversely affected.

Recommendation GS-3 - The licensee has stated that it throttles AFW system flow to avoid water hammer. The licensee should reexamine the practice of throttling AFW system flow to avoid water hammer.

The licensee should verify that the AFW system will supply on demand sufficient initial flow to the necessary steam generators to assure adequate decay heat removal following loss of main feedwater flow and a reactor trip from 100% power. In cases where this reevaluation results in an increase in initial AFW system flow, the licensee should provide sufficient information to demonstrate that the required initial AFW system flow will not result in plant damage due to water hammer.

5.2.4 Emergency Procedures for Initiating Backup Water Supplies

Concern - Most of the plants do not have written procedures for transferring to alternate sources of AFW supply if the primary supply is unavailable or exhausted. Without specific criteria and procedures for an operator to follow to transfer to alternate water sources, the primary supply could be exhausted and result in pump damage or a long interruption of AFW flow.

Recommendation GS-4 - Emergency procedures for transferring to alternate sources of AFW supply should be available to the plant operators. These procedures should include criteria to inform the operators when, and in what order, the transfer to alternate water sources should take place. The following cases should be covered by the procedures:

(1) The case in which the primary water supply is not initially available. The procedures for this case should include any operator actions required to protect the AFW system pumps against self-damage before water flow is initiated.

(2) The case in which the primary water supply is being depleted. The procedure for this case should provide for transfer to the alternate water sources prior to draining of the primary water supply.

5.2.5 Emergency Procedures for Initiating AFW Flow Following a Complete Loss of Alternating Current Power

Concern - Some operating plants depend on ac power for all sources of AFW system supply, including the turbine-driven pump train. In the event of loss of offsite and onsite ac power, ac-dependent lube oil supply or lube oil cooling for the pump will stop, and/or manual actions are required to initiate AFW flow from the turbine-driven pump by manually opening the turbine steam admission valve and/or AFW system flow control valves. There are no procedures available to the plant operators for AFW system initiation and control under these conditions. This could result in a considerable time delay for AFW system initiation, since the operators would not be guided by procedures dealing with this event.

Recommendation GS-5 - The as-built plant should be capable of providing the required AFW flow for at least two hours from one AFW pump train, independent of any ac power source. If manual AFW system initiation or flow control is required following a complete loss of ac power, emergency procedures should be established for manually initiating and controlling the system under these conditions. Since the water for cooling of the lube oil for the turbine-driven pump bearings may be dependent on ac power, design or procedural changes shall be made to eliminate this dependency as soon as practicable. Until this is done, the emergency procedures should provide for an individual to be stationed at the turbine-driven pump in the event of the loss of all ac power to monitor pump bearing and/or lube oil temperatures. If necessary, this operator would operate the turbine-driven pump in an on-off mode until ac power is restored. Adequate lighting powered by direct current (dc) power sources and communications at local stations should also be provided if manual initiation and control of the AFW system is needed. (See Recommendation GL-3 for the longer term resolution of this concern.)

5.2.6 AFW System Flow Path Verification

Concern - Periodic testing of the AFW system is accomplished by testing of individual components of one flow train (periodic pump recirculation flow test or automatic valve actuation), thus altering the normal AFW system flow path(s). The flow capability of the entire AFW system, or at least one integral AFW system train, is only demonstrated on system demand following a transient, or if the AFW system is used for normal plant startup or shutdown.

Recent Licensee Event Reports indicate a need to improve the quality of system testing and maintenance. Specifically, periodic testing and maintenance procedures inadvertently result in (1) more than one AFW system flow train being unavailable during the test, or (2) the AFW system flow train under test not being properly restored to its operable condition following

the test or maintenance work. The Office of Inspection and Enforcement has taken action to correct Item (1); the recommendation below is made to correct Item (2).

Recommendation GS-6 - The licensee should confirm flow path availability of an AFW system flow train that has been out of service to perform periodic testing or maintenance as follows:

(1) Procedures should be implemented to require an operator to determine that the AFW system valves are properly aligned and a second operator to independently verify that the valves are properly aligned.

(2) The licensee should propose Technical Specifications to assure that, prior to plant startup following an extended cold shutdown, a flow test would be performed to verify the normal flow path from the primary AFW system water source to the steam generators. The flow test should be conducted with AFW system valves in their normal alignment.

5.2.7 Non-Safety Grade, Non-Redundant AFW System Automatic Initiation Signals

Concern - Some plants with an automatically initiated AFW system utilize some initiation signals that are not safety-grade, do not meet the single failure criterion, and are not required by the Technical Specifications to be tested periodically. This can result in reduced reliability of the AFW system.

Recommendation GS-7 - The licensee should verify that the automatic start AFW system signals and associated circuitry are safety-grade. If this cannot be verified, the AFW system automatic initiation system should be modified in the short-term to meet the functional requirements listed below. For the longer-term, the automatic initiation signals and circuits should be upgraded to meet safety-grade requirements, as indicated in Recommendation GL-5.

(1) The design should provide for the automatic initiation of the AFW system flow.

(2) The automatic initiation signals and circuits should be designed so that a single failure will not result in the loss of AFW system function.

(3) Testability of the initiation signals and circuits shall be a feature of the design.

(4) The initiation signals and circuits should be powered from the emergency buses.

(5) Manual capability to initiate the AFW system from the control room should be retained and should be implemented so that a single failure in the manual circuits will not result in the loss of system function.

(6) The ac motor-driven pumps and valves in the AFW system should be included in the automatic actuation (simultaneous and/or sequential) of the loads to the emergency buses.

(7) The automatic initiation signals and circuits shall be designed so that their failure will not result in the loss of manual capability to initiate the AFW system from the control room.

5.2.8 Automatic Initiation of AFW Systems

Concern - For plants with a manually initiated AFW system, there is the potential for failure of the operator to manually actuate the system following a transient in time to maintain the steam generator water level high enough to assure reactor decay heat removal via the steam generator(s). While IE Bulletin 79-06A requires a dedicated individual for W-designed operating plants with a manually initiated AFW system, further action should be taken in the short-term. This concern is identical to Item 2.1.7a of NUREG-0578.[13]

Recommendation GS-8 - The licensee should install a system to automatically initiate AFW system flow. This system need not be safety-grade; however, in the short-term, it should meet the criteria listed below, which are similar to Item 2.1.7.a of NUREG-0578.[13] For the longer-term, the automatic initiation signals and circuits should be upgraded to meet safety-grade requirements, as indicated in Recommendation GL-2.

(1) The design should provide for the automatic initiation of the AFW system flow.

(2) The automatic initiation signals and circuits should be designed so that a single failure will not result in the loss of AFW system function.

(3) Testability of the initiating signals and circuits should be a feature of the design.

(4) The initiating signals and circuits should be powered from the emergency buses.

(5) Manual capability to initiate the AFW system from the control room should be retained and should be implemented so that a single failure in the manual circuits will not result in the loss of system function.

(6) The ac motor-driven pumps and valves in the AFW system should be included in the automatic actuation (simultaneous and/or sequential) of the loads to the emergency buses.

(7) The automatic initiation signals and circuits should be designed so that their failure will not result in the loss of manual capability to initiate the AFW system from the control room.

5.3 Additional Short-Term Recommendations

The following additional short-term recommendations resulted from the staff's Lessons Learned Task Force review and the Bulletins & Orders Task Force review of AFW systems at Babcock & Wilcox-designed operating plants, subsequent to our review of the AFW system designs at W- and C-E- designed operating plants. They have not been examined for specific applicability to individual W-and CE-designed operating plants.

5.3.1 Primary AFW Water Source Low Level Alarm

Concern - Plants which do not have level indication and alarm for the primary water source may not provide the operator with sufficient information to properly operate the AFW system.

Recommendation - The licensee should provide redundant level indication and low level alarms in the control room for the AFW system primary water supply, to allow the operator to anticipate the need to make up water or transfer to an alternate water supply and prevent a low pump suction pressure condition from occurring. The low level alarm setpoint should allow at least 20 minutes for operator action, assuming that the largest capacity AFW pump is operating.

5.3.2 AFW Pump Endurance Test

Concern - Since it may be necessary to rely on the AFW system to remove decay heat for extended periods of time, it should be demonstrated that the AFW pumps have the capability for continuous operation over an extended time period without failure.

Recommendation - The licensee should perform a 72 hour endurance test on all AFW system pumps, if such a test or continuous period of operation has not been accomplished to date. Following the 72 hour pump run, the pumps should be shut down and cooled down and then restarted and run for one hour. Test acceptance criteria should include demonstrating that the pumps remain within design limits with respect to bearing/bearing oil temperatures and vibration and that pump room ambient conditions (temperature, humidity) do not exceed environmental qualification limits for safety-related equipment in the room.

5.3.3 Indication of AFW Flow to the Steam Generators

Concern - Indication of AFW flow to the steam generators is considered important to the manual regulation of AFW flow to maintain the required steam generator water level. This concern is identical to Item 2.1.7.b of NUREG-0578.[13]

Recommendation - The licensee should implement the following requirements as specified by Item 2.1.7.b on page A-32 of NUREG-0578:[13]

(1) Safety-grade indication of AFW flow to each steam generator should be provided in the control room.

(2) The AFW flow instrument channels should be powered from the emergency buses consistent with satisfying the emergency power diversity requirements for the AFW system set forth in Auxiliary Systems Branch Technical Position 10-1 of the Standard Review Plan, Section 10.4.9.

5.3.4 AFW System Availability During Periodic Surveillance Testing

Concern - Some plants require local manual realignment of valves to conduct periodic pump surveillance tests on one AFW system train. When such plants are in this test mode and there is only one remaining AFW system train available to respond to a demand for initiation of AFW system operaiton, the AFW system redundancy and ability to withstand a single failure are lost.

Recommendation - Licensees with plants which require local manual realignment of valves to conduct periodic tests on one AFW system train and which have only one remaining AFW train available for operation should propose Technical Specifications to provide that a dedicated individual who is in communication with the control room be stationed at the manual valves. Upon instruction from the control room, this operator would re-align the valves in the AFW system from the test mode to its operational alignment.

5.4 Long-Term Generic Recommendations

5.4.1 Automatic Initiation of AFW Systems

Concen - This concern is the same as short-term generic recommendation GS-8; namely, failure of an operator to actuate a manual start AFW system in time to maintain steam generator water level high enough to assure reactor decay heat removal via the steam generator(s).

Recommendation GL-1 - For plants with a manual starting AFW system, the licensee should install a system to automatically initiate the AFW system flow. This system and associated automatic initiation signals should be designed and installed to meet safety-grade requirements. Manual AFW system start and control capability should be retained with manual start serving as backup to automatic AFW system initiation.

5.4.2 Single Valves in the AFW System Flow Path

Concern - This concern is the same as short-term generic recommendation GS-2 -- namely, AFW system inoperability due to an inadvertently closed manual valve that could interrupt all AFW system flow.

Recommendation GL-2 - Licensees with plant designs in which all (primary and alternate) water supplies to the AFW systems pass through valves in a single flow path should install redundant parallel flow paths (piping and valves).

Licensees with plant designs in which the primary AFW system water supply passes through valves in a single flow path, but the alternate AFW system water supplies connect to the AFW system pump suction piping downstream of the above valve(s), should install redundant valves parallel to the above valve(s) or provide automatic opening of the valve(s) from the alternate water supply upon low pump suction pressure.

The licensee should propose Technical Specifications to incorporate appropriate periodic inspections to verify the valve positions into the surveillance requirements.

5.4.3 Elimination of AFW System Dependency on Alternating Current Power Following A Complete Loss of Alternating Current Power.

Concern - This concern is the same as short-term generic recommendation GS-5 - namely, delay in initiation of AFW system operation or maintaining AFW system operation following a postulated loss of onsite and offsite ac power; i.e., ac power blackout.

Recommendation GL-3 - At least one AFW system pump and its associated flow path and essential instrumentation should automatically initiate AFW system flow and be capable of being operated independently of any ac power source for at least two hours. Conversion of dc power to ac power is acceptable.

5.4.4 Prevention of Multiple Pump Damage Due to Loss of Suction Resulting From Natural Phenomena

Concern - In many of the operating plants, the normal water supply to the AFW system pumps (including the interconnected piping) is not protected from earthquakes or tornadoes. Any natural phenomenon severe enough to result in a loss of the water supply could also be severe enough to cause a loss of offsite power with loss of main feedwater, resulting in an automatic initiation signal to start the AFW system pumps. The pumps would start without any suction head, leading to cavitation and multiple pump damage in a short period of time, possibly too short for the operators to take action that would protect the pumps. This may lead to unacceptable consequences for some plants, due to a complete loss of feedwater (main and auxiliary).

Recommendation - GL-4 - Licensees having plants with unprotected normal AFW system water supplies should evaluate the design of their AFW systems to determine if automatic protection of the pumps is necessary following a seismic event or a tornado. The time available before pump damage, the alarms and indications available to the control room operator, and the time necessary for assessing the problem and taking action should be considered in determining whether operator action can be relied on to prevent pump damage. Consideration should be given to providing pump protection by means such as automatic switchover of the pump suctions to the alternate safety-grade source of water, automatic pump trips on low suction pressure, or upgrading the normal source of water to meet seismic Category I and tornado protection requirements.

5.5.5 Non-Safety Grade, Non-Redundant AFW System Automatic Initiation Signals

Concern - This concern is the same as short-term generic recommendation GS-7 - namely, reduced AFW system reliability as a result of use of non-safety-grade, non-redundant signals, which are not periodically tested, to automatically initiate the AFW system.

Recommendation GL-5 - The licensee should upgrade the AFW system automatic initiation signals and circuits to meet safety-grade requirements.

5.5 Plant Specific AFW System Recommendations

The short-term and long-term plant specific recommendations applicable to the AFW systems for each plant are identified and discussed in Appendix X.

5.6 Summary of AFW System Recommendations for Westinghouse-Designed Operating Plants

Table III-3 below summarizes the short-term and long-term generic and plant-specific recommendations for the AFW system at each W-designed operating reactor. The additional generic short-term recommendations discussed in 5.3 of this appendix are not included in Table III-3. However, these recommendations are included in the individual plant AFW system evaluations contained in Appendix X.

Table III-3 (attached)

REFERENCES

1. Standard Review Plan (NUREG-75/087), Chapter 10.4.9, and Branch Technical Position ASB 10-1.

2. Reactor Safety Study (WASH-1400), October 1975.

3. Memorandum, S. Levine to H. Lewis, dated June 27, 1978.

4. "Risk Assessment Review Group Report to the U.S. Nuclear Regulatory Commission" (the "Lewis Committee Report"), NUREG/CR-0400.

5. Commission Policy on Risk Assessment.

6. Identification of Unresolved Safety Issues Relating to Nuclear Power Plants, NUREG-0510).

8. Paper presented at American Nuclear Society by S. Asselin, J. Hickman, et al, 1978.

9. IE Bulletin 79-06A.

10. IE Bulletin 79-06B.

Table III-3 (W)

Plant	Generic Recommendations: Short Term								Generic Recommendations: Long Term					Plant Specific Recommendations: Short Term	Plant Specific Recommendations: Long Term
	GS-1: Tech Spec LCO Train Outage Time Limit	GS-2: Tech Spec-Single Flow Path Manual Valves	GS-3: AFWS Flow Throttling-Water Hammer	GS-4: Emergency Procedure-Backup Water Supplies	GS-5: Emergency Procedure-AC Power Blackout	GS-6: Flow Path Verification	GS-7: Non-Safety Grade AFWS Automatic Start Signals	GS-8: Automatic Actuation of AFWS	GL-1: Automatic Actuation of AFWS	GL-2: Single Flow Path-Manual Valves	GL-3: Eliminate AC Power Dependency of One Train	GL-4: Multiple Pump Damage Protection-Natural Phenomena	GL-5: Non-Safety Grade AFWS Automatic Start Signals		
Beaver Valley #1 2-elect pumps 1-turbine pump Automatic Initiation Initiation			X	X		X	X						X	-Modify Tech Specs to require periodically testing and verification of position of manual valves from River Water System to AFWS. -Implement improved procedures for locking manual valves and stagger testing of AFWS pumps. -Re-evaluate alignment of AFW pump discharge block valve to assure required AFW flow for normal, transient, and accident plant conditions.	-Evaluate postulated AFWS discharge pipe break concurrent with single active failure to determine AFW system modifications or procedures necessary or describe how plant can be safely shutdown by use of other available systems.
D.C. Cook 1&2 1 elect pump* 1 turbine pump* *per unit (elect pumps shared) Automatic Initiation		X		X	X	X	X				X	X	X		-Complete licensee proposed modifications to eliminate turbine pump train dependence on AC power.
Farley #1 2 elect pumps 1 turbine pump Automatic Initiation				X	X	X	X				X		X		

Table III-3 (W)

Plant	Generic Recommendations: Short Term								Generic Recommendations: Long Term					Plant Specific Recommendations: Short Term	Plant Specific Recommendations: Long Term
	GS-1: Tech Spec LCO Train Outage Time Limit	GS-2: Tech Spec-Single Flow Path Manual Valves	GS-3: AFWS Flow Throttling-Water Hammer	GS-4: Emergency Procedure-Backup Water Supplies	GS-5: Emergency Procedure-AC Power Blackout	GS-6: Flow Path Verification	GS-7: Non-Safety Grade AFWS Automatic Start Signals	GS-8: Automatic Actuation of AFWS	GL-1: Automatic Actuation of AFWS	GL-2: Single Flow Path-Manual Valves	GL-3: Eliminate AC Power Dependency of One Train	GL-4: Multiple Pump Damage Protection-Natural Phenomena	GL-5: Non-Safety Grade AFWS Automatic Start Signals		
Ginna Main AFWS 2 elect pumps 1 turbine pump Automatic Initiation Standby AFWS 2 elect pumps Manual Initiation			X		X	X	X				X		X		-Evaluate capability to provide water supply for 2 hours without dependence on AC power. -Complete SEP evaluation of the need for automatic termination of flow to a depressurized steam generator and automatically providing flow to an intact steam generator and capability of (M) and (SB) AFWS to withstand missiles - internal and tornado, flooding, pipe whip, and seismic events.
Haddam Neck 2-turbine pumps Manual Initiation	X	X		X	X	X		X		X	X		X	-Revise monthly test procedure 5.1-13 to eliminate blocking flow path of both pumps -Monthly test procedure 5.1-14 should not be performed with reactor at power	-Revise design to protect against non-isolable break in common header to SG's. -Review MFWS and AFWS capability of withstand pipe break and single active failure. -Complete licensee proposed modifications to eliminate turbine pump train dependence on AC power for lube oil cooling. -Complete SEP evaluation of (a) missiles, pipe whip, earthquakes, flooding and (b) need for automatic termination of flow of a depressured steam generator and...

Table III-3 (W)

Plant	Generic Recommendations: Short Term								Generic Recommendations: Long Term					Plant Specific Recommendations: Short Term	Plant Specific Recommendations: Long Term
	GS-1: Tech Spec LCO Train Outage Time Limit	GS-2: Tech Spec-Single Flow Path Manual Valves	GS-3: AFWS Flow Throttling-Water Hammer	GS-4: Emergency Procedure-Backup Water Supplies	GS-5: Emergency Procedure-AC Power Blackout	GS-6: Flow Path Verification	GS-7: Non-Safety Grade AFWS Automatic Start Signals	GS-8: Automatic Actuation of AFWS	GL-1: Automatic Actuation of AFWS	GL-2: Single Flow Path-Manual Valves	GL-3: Eliminate AC Power Dependency of One Train	GL-4: Multiple Pump Damage Protection-Natural Phenomena	GL-5: Non-Safety Grade AFWS Automatic Start Signals		
H.B. Robinson 2-turbine pumps 1-elect pump Automatic Initiation	X	X		X	X	X	X			X	X		X	-Modify Tech Specs to require testing of normally locked closed service water and deep well manual valves. -Modify Tech Specs to require monthly testing of turbine pump steam admission valves.	-Evaluate postulated tornado considering single active failure to determine AFW system modifications of procedures to assure AFW water supply or demonstrate how the plant can be safely shutdown.
Indian Point 2 and 3 2-elect pumps* 1-turbine pump* *per unit Automatic Initiation	X	X	X	X		X	X			X			X	-Review effect of loss of air or power to air operated flow control valves and steam admission valves which are powered by same electrical division for Unit #2. Prepare emergency procedure to maintain AFW capability.	-Evaluate capability to withstand pipe break, missiles since all pumps are in one room. -Modify Unit 2 AFW system design to supply power to the controllers of flow control valves and steam admission valves from separate safety grade buses.
Kewaunee 2-elect pumps 1-turbine pump Automatic Initiation	X	X		X		X	X			X		X	X		

Table III-3 (W)

Plant	Generic Recommendations: Short Term								Generic Recommendations: Long Term					Plant Specific Recommendations: Short Term	Plant Specific Recommendations: Long Term
	GS-1: Tech Spec LCO Train Outage Time Limit	GS-2: Tech Spec-Single Flow Path Manual Valves	GS-3: AFWS Flow Throttling-Water Hammer	GS-4: Emergency Procedure-Backup Water Supplies	GS-5: Emergency Procedure-AC Power Blackout	GS-6: Flow Path Verification	GS-7: Non-Safety Grade AFWS Automatic Start Signals	GS-8: Automatic Actuation of AFWS	GL-1: Automatic Actuation of AFWS	GL-2: Single Flow Path-Manual Valves	GL-3: Eliminate AC Power Dependency of One Train	GL-4: Multiple Pump Damage Protection-Natural Phenomena	GL-5: Non-Safety Grade AFWS Automatic Start Signals		
No. Anna 1 2-elect pumps* 1-turbine pump* *per unit Automatic Initiation				X		X	X						X		
Prairie Island 1&2 1 elect pump* 1 turbine pump* *per unit elect pump normally feeds opposite unit SG's Automatic Initiation	X	X		X	X	X	X				X	X	X		

Table III-3 (W)

Plant	Generic Recommendations: Short Term								Generic Recommendations: Long Term					Plant Specific Recommendations: Short Term	Plant Specific Recommendations: Long Term
	GS-1: Tech Spec LCO Train Outage Time Limit	GS-2: Tech Spec-Single Flow Path Manual Valves	GS-3: AFWS Flow Throttling-Water Hammer	GS-4: Emergency Procedure-Backup Water Supplies	GS-5: Emergency Procedure-AC Power Blackout	GS-6: Flow Path Verification	GS-7: Non-Safety Grade AFWS Automatic Start Signals	GS-8: Automatic Actuation of AFWS	GL-1: Automatic Actuation of AFWS	GL-2: Single Flow Path-Manual Valves	GL-3: Eliminate AC Power Dependency of One Train	GL-4: Multiple Pump Damage Protection-Natural Phenomena	GL-5: Non-Safety Grade AFWS Automatic Start Signals		
Pt. Beach 1&2 1-elect pump* 1-turbine pump* *per unit (elect pumps shared) Automatic Initiation	X	X		X	X	X	X				X	X	X		
Salem 1 2-elect pumps 1-turbine pump Automatic Initiation		X	X	X		X	X			X			X		

Table III-3 (W)

Plant	Generic Recommendations: Short Term								Generic Recommendations: Long Term					Plant Specific Recommendations: Short Term	Plant Specific Recommendations: Long Term
	GS-1: Tech Spec LCO Train Outage Time Limit	GS-2: Tech Spec-Single Flow Path Manual Valves	GS-3: AFWS Flow Throttling-Water Hammer	GS-4: Emergency Procedure-Backup Water Supplies	GS-5: Emergency Procedure-AC Power Blackout	GS-6: Flow Path Verification	GS-7: Non-Safety Grade AFWS Automatic Start Signals	GS-8: Automatic Actuation of AFWS	GL-1: Automatic Actuation of AFWS	GL-2: Single Flow Path-Manual Valves	GL-3: Eliminate AC Power Dependency of One Train	GL-4: Multiple Pump Damage Protection-Natural Phenomena	GL-5: Non-Safety Grade AFWS Automatic Start Signals		
San Onofre #1 1 elect pump 1 turbine pump Manual Initiation		X		X	X	X		X	X	X	X	X		-Periodically test normally closed manual valve -Install operators on normally closed manual discharge valves -Connect fire hose or temporary piping to AFWS suction header	-Evaluate main feed and main steam line breaks in AFW discharge lines concurrent with sincle active failure and determine (1) necessary AFWS design changes including environmental qualification and procedures or (2) demonstrate how plant can be brought to safe shutdown by use of other available systems. -Complete SEP evaluation of (1) capability of the AFW system to withstand tornado and internal missiles, flooding, pipe whip, and seismic events, and (2) the need for automatic termination of flow to a depressurized steam generator and automatically providing flow to an intact steam generator.

Table III-3 (W)

Plant	Generic Recommendations: Short Term								Generic Recommendations: Long Term					Plant Specific Recommendations: Short Term	Plant Specific Recommendations: Long Term
	GS-1: Tech Spec LCO Train Outage Time Limit	GS-2: Tech Spec-Single Flow Path Manual Valves	GS-3: AFWS Flow Throttling-Water Hammer	GS-4: Emergency Procedure-Backup Water Supplies	GS-5: Emergency Procedure-AC Power Blackout	GS-6: Flow Path Verification	GS-7: Non-Safety Grade AFWS Automatic Start Signals	GS-8: Automatic Actuation of AFWS	GL-1: Automatic Actuation of AFWS	GL-2: Single Flow Path-Manual Valves	GL-3: Eliminate AC Power Dependency of One Train	GL-4: Multiple Pump Damage Protection-Natural Phenomena	GL-5: Non-Safety Grade AFWS Automatic Start Signals		
Surry 1&2 2 elect pumps* 1-turbine pump* *per unit (each AFWS can feed SG's of opposite unit) Automatic Initiation	X			X	X	X	X				X		X	-Lock open manual valves inside containment and periodically verify position. -Stagger periodic testing of pump train tests. -Prepare emergency procedure for operating AFWS of one unit to supply SG's of opposite unit.	-Re-evaluate AFWS design with MOV's inside containment considering environmental induced failure of MOV's or AFWS line break downstream of MOV's.
Trojan 1-diesel pump 1 turbine pump Automatic Initiation		X		X	X	X	X			X	X	X	X		-Evaluate need for planned third pump to be safety grade and installed so that AFW can withstand pipe break plus single active failure.

Table III-3 (W)

Plant	Generic Recommendations: Short Term								Generic Recommendations: Long Term					Plant Specific Recommendations: Short Term	Plant Specific Recommendations: Long Term
	GS-1: Tech Spec LCO Train Outage Time Limit	GS-2: Tech Spec-Single Flow Path Manual Valves	GS-3: AFWS Flow Throttling-Water Hammer	GS-4: Emergency Procedure-Backup Water Supplies	GS-5: Emergency Procedure-AC Power Blackout	GS-6: Flow Path Verification	GS-7: Non-Safety Grade AFWS Automatic Start Signals	GS-8: Automatic Actuation of AFWS	GL-1: Automatic Actuation of AFWS	GL-2: Single Flow Path-Manual Valves	GL-3: Eliminate AC Power Dependency of One Train	GL-4: Multiple Pump Damage Protection-Natural Phenomena	GL-5: Non-Safety Grade AFWS Automatic Start Signals		
Turkey Pt. 3&4 3-turbine pumps for both units one pump normally supplies each unit 3rd pump shared backup Automatic Initiation	X	X		X	X	X	X				X		X		-Evaluate postulated pipe break in the single flow path portion of the AFW pump discharge or turbine steam supply line (1) to determine necessary change to AFW design or procedures, or (2) describe how plant can be safely shutdown by use of other available systems -Evaluate shared source of cooling water (city water system) for turbine driven pump lube oil to eliminate commode failures -Provide capability for manual operation of AFWS from the control room -Evaluate break in MFW header upstream of AFW control valve to preclude loss of flow to all steam generators -Reevaluate circuit logic that isolates turbine pump steam supply line on CIS.

Table III-3 (W)

Plant	Generic Recommendations: Short Term								Generic Recommendations: Long Term					Plant Specific Recommendations: Short Term	Plant Specific Recommendations: Long Term
	GS-1: Tech Spec LCO Train Outage Time Limit	GS-2: Tech Spec-Single Flow Path Manual Valves	GS-3: AFWS Flow Throttling-Water Hammer	GS-4: Emergency Procedure-Backup Water Supplies	GS-5: Emergency Procedure-AC Power Blackout	GS-6: Flow Path Verification	GS-7: Non-Safety Grade AFWS - Automatic Start Signals	GS-8: Automatic Actuation of AFWS	GL-1: Automatic Actuation of AFWS	GL-2: Single Flow Path-Manual Valves	GL-3: Eliminate AC Power Dependency of One Train	GL-4: Multiple Pump Damage Protection-Natural Phenomena	GL-5: Non-Safety Grade AFWS Automatic Start Signals		
Yankee Rowe 1-turbine pump (backed up by charging and safety injection systems) Manual Initiation		X		X	X	X								-Periodically cycle the manual valves that must be operated to connect the charging pumps/safety injection pumps to the AFWS.	-One AFW pump and associated flow path and instrumentation should be capable of initiation and operation from control room for two hours independent of AC power supply. -Evaluate need for charging pumps to be normally supplied from emergency bus. -Complete evaluation of SEP concerns: (a) Evaluate effect of missiles, pipe break, safety class & seismic req'ts (b) As part of main steam line break analysis, evaluate the need for capability to automatically terminate flow to a depressurized SG and feed the intact SG.

Table III-3 (W)

Plant	Generic Recommendations: Short Term								Generic Recommendations: Long Term					Plant Specific Recommendations: Short Term	Plant Specific Recommendations: Long Term
	GS-1: Tech Spec LCO Train Outage Time Limit	GS-2: Tech Spec-Single Flow Path Manual Valves	GS-3: AFWS Flow Throttling-Water Hammer	GS-4: Emergency Procedure-Backup Water Supplies	GS-5: Emergency Procedure-AC Power Blackout	GS-6: Flow Path Verification	GS-7: Non-Safety Grade AFWS Automatic Start Signals	GS-8: Automatic Actuation of AFWS	GL-1: Automatic Actuation of AFWS	GL-2: Single Flow Path-Manual Valves	GL-3: Eliminate AC Power Dependency of One Train	GL-4: Multiple Pump Damage Protection-Natural Phenomena	GL-5: Non-Safety Grade AFWS Automatic Start Signals		
Zion 1&2 2-elect pumps* 1-turbine pump* *per unit Automatic Initiation	X	X	X	X	X	X	X			X	X	X	X	-Add Technical Specification LCO when Condensate Storage Tank level is below 170,000 gallons.	-Evaluate the need to qualify valves, valve operators and instrumentation for environmental conditions resulting from high energy line break. -Evaluate a break in the common headers from motor or turbine driven AFW pump to determine necessary design changes or procedure to preclude loss of all AFW flow to all steam generators.

Basis for Auxiliary Feedwater System Flow Requirements

As a result of recent staff reviews of operating plant Auxiliary Feedwater Systems (AFWS), the staff concludes that the design bases and criteria provided by licensees for establishing AFWS requirements for flow to the steam generator(s) to assure adequate removal of reactor decay heat are not well defined or documented.

We require that you provide the following AFWS flow design basis information as applicable to the design basis transients and accident conditions for your plant.

1. a. Identify the plant transient and accident conditions considered in establishing AFWS flow requirements, including the following events:

   1) Loss of Main Feed (LMFW)
   2) LMFW w/loss of offsite AC power
   3) LMFW w/loss of onsite and offsite AC power
   4) Plant cooldown
   5) Turbine trip with and without bypass
   6) Main steam isolation valve closure
   7) Main feed line break
   8) Main steam line break
   9) Small break LOCA
   10) Other transient or accident conditions not listed above

b. Describe the plant protection acceptance criteria and corresponding technical bases used for each initiating event identified above. The acceptance criteria should address plant limits such as:

- Maximum RCS pressure (PORV or safety valve actuation)
- Fuel temperature or damage limits (DNB, PCT, maximum fuel central temperature)
- RCS cooling rate limit to avoid excessive coolant shrinkage
- Minimum steam generator level to assure sufficient steam generator heat transfer surface to remove decay heat and/or cool down the primary system.

2. Describe the analyses and assumptions and corresponding technical justification used with plant condition considered in 1.a. above including:

a. Maximum reactor power (including instrument error allowance) at the time of the initiating transient or accident.

b. Time delay from initiating event to reactor trip.

c. Plant parameter(s) which initiates AFWS flow and time delay between initiating event and introduction of AFWS flow into steam generator(s).

d. Minimum steam generator water level when initiating event occurs.

e. Initial steam generator water inventory and depletion rate before and after AFWS flow commences - identify reactor decay heat rate used.

f. Maximum pressure at which steam is released from generator(s) and against which the AFW pump must develop sufficient head.

g. Minimum number of steam generators that must receive AFW flow; e.g. 1 out of 2?, 2 out of 4?

h. RC flow condition - continued operation of RC pumps or natural circulation.

i. Maximum AFW inlet temperature.

j. Following a postulated steam or feed line break, time delay assumed to isolate break and direct AFW flow to intact steam generator(s). AFW pump flow capacity allowance to accommodate the time delay and maintain minimum steam generator water level. Also identify credit taken for primary system heat removal due to blowdown.

k. Volume and maximum temperature of water in main feed lines between steam generator(s) and AFWS connection to main feed line.

l. Operating condition of steam generator normal blowdown following initiating event.

m. Primary and secondary system water and metal sensible heat used for cooldown and AFW flow sizing.

n. Time at hot standby and time to cooldown RCS to RHR system cut in temperature to size AFW water source inventory.

3. Verify that the AFW pumps in your plant will supply the necessary flow to the steam generator(s) as determined by items 1 and 2 above considering a single failure. Identify the margin in sizing the pump flow to allow for pump recirculation flow, seal leakage and pump wear.

PLANTS UNDER OL REVIEW

WITH NSSS DESIGNED BY WESTINGHOUSE OR CE

1. Farley 2
2. Byron 1/2
3. Braidwood 1/2
4. McGuire 1/2
5. So. Texas 1/2
6. Waterford (CE)
7. Diablo Canyon 1/2
8. Salem 2
9. Summer 1
10. San Onofre 2/3 (CE)
11. Watts Bar 1/2
12. Comanche Peak 1/2
13. North Anna 2