Tennessee Valley Authority, Post Office Box 2000, Spring City, Tennessee 37381

JUN 18 1992

U.S. Nuclear Regulatory Commission
ATTN: Document Control Desk
Washington, DC 20555

Gentlemen:

In the Matter of the Application of	)	Docket Nos. 50-390
Tennessee Valley Authority	)	50-391

WATTS BAR NUCLEAR PLANT (WBN) - PROPOSED CHANGES TO FINAL SAFETY ANALYSIS REPORT (FSAR) CHAPTER 8 (TAC 63649)

TVA has initiated a significant design modification to the electric power distribution system for WBN. This modification involves the replacement of Common Station Service Transformers (CSSTs) C and D with new transformers that each have two secondary windings with automatic load tap changers. As part of the design modification, offsite preferred power via CSSTs C and D will become the normal operational power supply for the 6.9kV shutdown boards. One 6.9kV shutdown board will be powered from each secondary winding. The 6.9kV shutdown boards will no longer be supplied from the unit generator via the unit station service transformers (USSTs) and 6.9kV unit boards, except for special maintenance situations that may be permitted when both units are in cold shutdown. Also, the second alternate supply breaker (fed from the opposite CSST D or C) for the 6.9kV shutdown boards will no longer be racked out during normal plant operation.

This new CSST design eliminates the possibility of overvoltage on the safety-related 6.9kV and associated 480V shutdown boards during cold shutdown when a postulated condition of minimum load on these boards combined with maximum allowable grid voltage could exist. The new CSST design also ensures that adequate voltage on the 6.9kV and 480V shutdown boards is maintained during a postulated design basis accident with maximum load and minimum grid voltage.

The above design modification was described in a letter from TVA dated September 13, 1991, as part of a response to a request for additional information concerning various electrical issues in FSAR Chapter 8. In that letter, TVA committed to submit appropriate FSAR changes describing

9206250324 920618
PDR ADOCK 05000390
A PDR

A001
1/1

JUN 18 1992

the design modification. Preliminary FSAR changes have now been drafted and they are enclosed with this letter as page markups. In addition to describing the design modification to CSSTs C and D, the enclosed FSAR markups also incorporate the results of a load shedding analysis for various offsite power contingencies and expand the related discussion of compliance with General Design Criteria (GDC) 17. The FSAR changes related to load shedding at WBN support information previously provided by TVA in the letter of September 13, 1991.

Please review the enclosed set of proposed changes to FSAR Chapter 8. TVA plans to incorporate the changes formally in a future FSAR amendment after receiving NRC concurrence.

If you have any questions, please telephone John Vorees at (615) 365-8819.

Sincerely,

W. J. Museler

William J. Museler
Site Vice President

Enclosure
cc (Enclosure):

NRC Resident Inspector
Watts Bar Nuclear Plant
P.O. Box 700
Spring City, Tennessee 37381

Mr. P. S. Tam, Senior Project Manager
U.S. Nuclear Regulatory Commission
One White Flint, North
11555 Rockville Pike
Rockville, Maryland 20852

Mr. B. A. Wilson, Project Chief
U.S. Nuclear Regulatory Commission
Region II
101 Marietta Street, NW, Suite 2900
Atlanta, Georgia 30323

ENCLOSURE

(FSAR Page Markups)

1.2.2.6 Steam and Power Conversion System

The Steam and Power Conversion System consists of a turbine-generator, main condenser, vacuum pumps, Turbine Seal System, Turbine Bypass System, hot well pumps, condensate booster pumps, main feed pumps, main feed pump turbines (MFPT), condenser feedwater heater, feedwater heaters, heater drain pumps, and Condensate Storage System. The system is designed to convert the heat produced in the reactor to electrical energy through conversion of a portion of the energy contained in the steam supplied from the steam generators, to condense the turbine exhaust steam into water, and to return the water to the steam generator as feedwater.

Each turbine generator unit consists of a tandem arrangement of one double-flow high-pressure turbine and three double-flow low-pressure turbines driving a direct-coupled generator at 1800 RPM. The generator has a nameplate rating of 1,411,000 kVA at 0.9 PF with 75 psi hydrogen pressure. Each unit employs a horizontal, triple pressure, single shell, single pass surface condenser. Return to the steam generator is through three stages of feedwater pumping and seven stages of feedwater heating. Safety relief valves and power operated relief valves, as well as a turbine bypass to the condenser are provided in the steam lines. 63

1.2.2.7 Plant Electrical System

The Plant Electric Power System consists of the main generators, the unit station service transformers, the common station service transformers, the diesel generators, the batteries, and the electric distribution system. Under normal operating conditions the main generators supply electrical power through isolated-phase buses to the main step-up transformers and the unit station service transformers (located adjacent to the Turbine Building). The primaries of the unit station service transformers are connected to the isolated-phase bus at a point between the generator terminals and the low-voltage connection of the main transformers. During operation, station auxiliary power is taken from the main generator through the~~se~~ transformers ~~During startup and shutdown, auxiliary power is supplied~~ from the 161 kV system through the common station service transformers. The standby onsite power is supplied by four diesel generators. An additional fifth diesel generator is available which can be substituted for any one of the normally aligned diesel generators. 57

through

to the non-safety auxiliary power system.

normal

unit station service

and

safety-related

The Plant Distribution System ~~can~~ receives ac power from ~~either the two nuclear power units, the two independent preferred (offsite) power circuits~~ or ~~the~~ four 4400 kW diesel-generator standby (onsite) power sources and distributes it to both safety-related and nonsafety-related loads in the plant. The two 63

See attached Insert 2.

See attached Insert 1.

ATTACHED INSERTS FOR
SECTION 1.2.2.7 (PAGE 1.2-7)

INSERT 1

Offsite electrical power supplies Class 1E circuits through the 161kV system via Common Station Service Transformers C and D.

INSERT 2

...Common Station Service Transformers C and D through the shutdown boards (which are powered from the offsite power system)...

Para 3.1.2.2

circuits shall be designed to be available in sufficient time following a loss of all onsite alternating current power supplies and the other offsite electric power circuit, to assure that specified acceptable fuel design limits and design conditions of the reactor coolant pressure boundary are not exceeded. One of these circuits shall be designed to be available within a few seconds following a loss-of-coolant accident to assure that core cooling, containment integrity, and other vital safety functions are maintained.

Provisions shall be included to minimize the probability of losing electric power from any of the remaining sources as a result of, or coincident with, the loss of power generated by the nuclear power unit, the loss of power from the transmission network, or the loss of power from the onsite electric power sources.

Compliance

The capacity and capability of either the onsite or offsite electric power system is sufficient to assure that (1) specified fuel design limits and design conditions of the reactor coolant pressure boundary are not exceeded as a result of anticipated operational occurrences and (2) the core is cooled and containment integrity and other vital functions are maintained in the event of postulated accidents.

Onsite Electrical Power System

The Onsite Electrical Power System serves both nuclear power units and certain common plant equipment. It consists of two independent diesel generator systems, each system containing two diesel generator units, two redundant Class IE electric power distribution trains, and four redundant vital instrument and control power channels, each provided with an uninterruptible AC power supply and distribution panel. A plant Class 1E DC power system is provided with four redundant divisions, each consisting of a battery, battery charger, and distribution panel. Each redundant onsite power supply, train, and channel has the capability and capacity to supply the required safety loads assuming the failure of its redundant counterpart. 51

Offsite Electrical Power System

The offsite electrical power source consists of two physically independent circuits which are ~~normally~~ energized and ~~immediately~~ available. The offsite sources are two independent 161-kv transmission lines terminating at the 161-kv switchyard, providing power to the plant, on demand, via the common station service transformers to the onsite Class 1E distribution system.

For a detailed description and analysis of the Electric Power

8.0 ELECTRIC POWER

8.1 INTRODUCTION

8.1.1 Utility Grid and Interconnections

The Tennessee Valley Authority (TVA) is a corporation of the United States Government serving the State of Tennessee and parts of six other States in the southeast on the boundaries of Tennessee. TVA is interconnected with electric power companies to the north, west, south, and east of its service area. As shown in Figure 8.1-1, the TVA grid consists of interconnected hydro plants, fossil-fueled plants, combustion turbine plants, and nuclear plants supplying electric energy over a transmission system consisting of various voltages up to 500kV.

The Watts Bar Nuclear Plant is located 48 miles northeast of Chattanooga, Tennessee, on the west bank of the Tennessee River. The plant is connected into a strong existing transmission grid supplying large load centers. Both nuclear units are connected into TVA's 500kV transmission system. One unit is connected with three and the other with two 500kV transmission lines which are integral parts of the 500kV transmission grid. ~~Normal power for the operations of a nuclear unit is supplied from unit station service transformers when the unit is connected to the transmission system through its main transformers bank.~~ Preferred power is supplied from the existing Watts Bar Hydro 161kV Switchyard over two radial lines located entirely on TVA property. The Watts Bar Hydro 161kV Switchyard is interconnected with the TVA power system through six 161kV transmission lines, five hydro generators, and four steam generators.

8.1.2 Plant Electrical Power System

The plant electric power system consists of the main generators, the unit station service transformers, the common station service transformers, the diesel generators, the batteries, and the electric distribution system as shown on Figures 8.1-2, 8.1-2a, and 8.1-3. Under normal operating conditions, the main generators supply electrical power through isolated-phase buses to the main step-up transformers and through the unit station service transformers (located adjacent to the Turbine Building to the non-safety auxiliary power system.). The primaries of the unit station service transformers are connected to the isolated-phase bus at a point between the generator terminals and the low-voltage connection of the main transformers. During normal operation, station auxiliary power is taken from the main generator through the unit station service transformers and ~~During startup and shutdown auxiliary power is supplied from~~ the 161kV system through the common station service transformers. The standby (onsite) power is supplied by four diesel generators. An additional diesel generator unit (ALGU) has been provided (equivalent to the existing diesel generators) to replace any one of the four existing diesel generator units.

See attached Insert 2.

See attached Insert 1.

ATTACHED INSERTS FOR
SECTION 8.1.2 (PAGE 8.1-1)

INSERT 1

Offsite electrical power supplies Class 1E circuits through the 161kV system via Common Station Service Transformers C and D.

INSERT 2

During startup and shutdown, all auxiliary power is supplied from the 161kV system through Common Station Service Transformers A, B, C, and D.

Para 8.1.4

Offsite (Preferred) Power System

1. Each of the two offsite power circuits has sufficient capacity, is continuously energized, and is available to supply the plant safety loads ~~within a few seconds~~ following a loss of coolant accident (LOCA) to assure that core cooling, containment integrity, and other vital safety functions are maintained.

2. The two offsite power circuits (not including the Watts Bar Hydro 161kV yard) are designed to be physically independent so as to minimize the likelihood of their simultaneous failure under operating and postulated accident and environmental conditions.

Onsite (Standby) Power Systems

1. The onsite power systems are designed to provide sufficient capacity to assure that acceptable fuel design limits and design conditions of the reactor coolant pressure boundary are not exceeded as a result of anticipated operational occurrences. Further, these systems provide sufficient capacity to ensure that the core is cooled and containment integrity and other vital functions are maintained in the event of postulated accidents in one unit and to safely shutdown the other unit.

2. The onsite power systems are capable of performing their safety functions assuming a single failure.

3. The onsite power systems are located within Category 1 structures so that they are protected from natural phenomena.

4. The onsite power systems are designed to perform their safety function considering the effects of the following events:

   a. postulated accident environment

   b. fires

   c. accident-generated missiles

   d. fire protection system operation

   e. accident-generated flooding, sprays, or jets

   f. single act, event, component, failure, or circuit fault that could cause multiple equipment malfunctions.

   g. Loss of all offsite power or loss of all offsite power concurrent with a LOCA.

AUG 1991
RECEIVED
EBASCO
DOCUMENT
CONTROL

5. The onsite power systems are designed to permit appropriate surveillance, periodic inspections, and testing of important areas and features to assess the continuity of the systems.

8.2 OFFSITE (PREFERRED) POWER SYSTEM

8.2.1 Description

Preferred ~~shutdown~~ offsite power is supplied from TVA's 161 kV transmission grid at Watts Bar Hydro Plant switchyard over two separate transmission lines, each connecting to two 161 - 6.9 kV common station service transformers at Watts Bar Nuclear Plant. ~~For any unit generator trip, the tripped unit automatically fast transfers from its unit-connected power~~ ~~source to~~ from offsite power ~~supplied~~ through common station service transformers C and D. ~~There is no intentional delay in initiation of this transfer, and it is completed in approximately six cycles.~~ The Class 1E power system ~~for~~ is always supplied

The ~~onsite~~ class 1E power system can be transferred from the normal offsite power supply to the ~~preferred (offsite) power system~~ alternate board transfer. Transfers from the normal supply to ~~preferred (offsite)~~ alternate supply may be manual or automatic. Manual (routine) transfers, initiated at the discretion of the operator for test or normal operation, are open circuit with a dead bus time of approximately six cycles. Manual transfers may be effected from the main control room by placing the 'auto-manual' transfer switch in manual, then placing the control switch for the selected supply breaker in the 'close' position and the control switch for the supply breaker in the 'trip' position.

INSERT ATTACHED AS NEW PARA.

For all unit generator trips except those caused by electrical faults that open the main generator 500 kV circuit breaker, the Balance of Plant (BOP) ac auxiliary power system remains connected to its unit sources for 30 seconds, then fast transfers to offsite power supplied through common transformers A and B. If the unit trip is caused by an electrical fault, the BOP system transfer is not delayed.

ADD

System analyses have been made that show for an acceptable range of transmission grid conditions, one offsite power circuit consisting of one 161 kV transmission line and transformers ~~A and~~ D, or the other transmission line and transformers ~~B and~~ C, is capable of starting and running all required safety-related loads ~~and powering at least half of all running BOP loads~~ for a design basis accident in one unit and a concurrent full-load rejection in the other unit. The analyses for the Class 1E power systems assumed that all equipment that is started by a safety injection signal (SIS) started at the same time, all equipment that is tripped off by a SIS was tripped, and that all continuous loads that could be operating immediately after the SIS, whether safety-related or not, were running. A load shedding feature is provided for part of the BOP loads in the event the 161 kV transmission system experiences system contingencies. 63

For flexibility there is also a maintenance feed available to the Class 1E power systems to be used only when both units are in cold shutdown.

ADD unless the load's control circuitry has sequential time delay, that

ATTACHED INSERT FOR
PARAGRAPH 8.2-1 (PAGE 8.2-1)

Automatic transfers only occur when the relay logic is tripping a transmission line and the associated common station service transformers.

8.2.1.1 Preferred Power Supply

The features of the offsite power system are shown in Figure 8.2-1, Development Single Line Diagram. Preferred power is supplied from the existing Watts Bar Hydro 161-kV switchyard over two 161-kV overhead lines approximately 1.5 miles long, located entirely on TVA property. These two transmission lines are supported on separate towers, and the separation of the two lines is sufficient to ensure that the failure of any tower in one line will not endanger the other line.

The Watts Bar Hydro 161-kV switchyard bus arrangement is designed so that the loss of any one of the four main bus sections will not cause loss of power to both of the two preferred power source lines to the nuclear plant. The Watts Bar Hydro Plant switchyard is interconnected with the TVA power system through six 161-kV transmission lines and the five Watts Bar hydro generators, as shown on the transmission arrangement, Figure 8.2-2. This switchyard also connects the four steam-driven generators in the Watts Bar Steam Plant which ~~are~~ do not generated operate continuously.

The Watts Bar-Sequoyah and the Watts Bar-Athens 161-kV lines both terminate on the Hydro plant switchyard bus 1, section 1. These two lines are on separate rights of way and do not cross each other except for a common river crossing. The Athens line is approximately 21.78 miles long and terminates in the Athens 161-kV substation along with 161-kV lines from Fort Loudon Hydro Plant and Sequoyah Nuclear Plant via Charleston 161-kV substation. The Sequoyah line is approximately 37.37 miles long and terminates in the 161-kV switchyard at Sequoyah Nuclear Plant. The Sequoyah 161-kV switchyard is connected to the 500-kV system through an intertie transformer bank, to one of the generating units at Sequoyah Nuclear Plant, to Chickamauga Hydro Plant, and to other substations which are integral parts of the transmission system with either direct or indirect connections to other TVA steam electric or hydro generating plants. 48

The Watts Bar-Great Falls 161-kV transmission line is approximately 53.12 miles long. This line is terminated on bus 2, section 2 in the Watts Bar Hydro Plant switchyard, and is tapped to supply the Pikeville 161-kV substation at a point approximately 30.5 miles from the Watts Bar Hydro Plant. At Great Falls Hydro Plant this line is terminated in the 161-kV switchyard along with a second circuit from Watts Bar Hydro which is routed by way of Spring City 161-kV substation and a 161-kV transmission line that interconnects with the power system network through the Murfreesboro 161-kV substation, McMinnville 161-kV substation, and the Center Hill Hydro Plant. The Great Falls and the Winchester 161-kV transmission lines cross near the Watts Bar Hydro switchyard.

The Watts Bar-Spring City 161-kV transmission line is

Para 8.2.1.2

Transmission lines in the 161-kV voltage class have two overhead ground wires provided for lightning protection. This shielding has been effective for an area isokeraunic level of 55 and is reflected in the average operating record of only 3.86 flashover interruptions annually per 100 miles of line. The use of circuit breakers with high speed reclosing relays results in the majority of these interruptions being momentary.

8.2.1.2 Transmission Lines, Switchyard, and Transformers

The two 161-kV and the five 500-kV lines connecting the nuclear plant with the TVA transmission network are indicated functionally on Figure 8.2-1. The onsite transmission line arrangement is shown on Figure 8.2-3 and the offsite transmission line routing in the vicinity of the Hydro Plant switchyard is shown on Figure 8.2-4. Preferred power is supplied from the existing Watts Bar Hydro 161-kV switchyard over two radial 161-kV overhead lines approximately 1.5 miles long. These lines are routed to minimize the likelihood of their simultaneous failure.

The location of common station service transformers A and B is shown on Figures 8.2-3 and 8.2-5. Physical separation is 61 feet, centerline to centerline and 32 feet 9 inches between closest parts. Each transformer has a single primary and two secondary windings. The primary voltage is 161-kV with the winding rated 57/76/95 MVA, OA/FA/FOA (Future). The secondary voltage is 6.9 kV and each winding is rated 36/48/60 MVA, OA/FA/FOA (Future).

Replace with attached.

~~The location of common station service transformers C and D is also shown on Figures 8.2-3 and 8.2-6A. Physical separation is 70 feet, centerline-to-centerline and 48 feet 4 inches between closest parts. Each transformer has a single primary winding and two secondary windings. The primary voltage is 161-kV, the winding is rated 27/36/45 MVA, OA/FA/FA. The secondary voltage is 6.9-kV and each winding is rated 15/20/25 MVA, OA/FA/FA.~~

Fire protection is provided for each common station service transformer by a water sprinkler system which can be automatically activated by thermostats or the transformer electrical protection devices.

8.2.1.3 Arrangement of the Start Boards, Unit Boards, Common Boards, and Reactor Coolant Pump (RCP) Boards

From the low-voltage side of common station service transformers A and B, 6.9-kV station service buses supply the 6.9-kV common, unit, and RCP boards via the 6.9-kV start boards. The station service (start) buses are outdoor, nonsegregated, partially ventilated, metal-clad structures and are shown on Figure 8.2-5. At the 6.9-kV start board these buses enter the outdoor metal-clad switchgear and connect to supply breakers. The design of

ADD Common station service transformers A, B, C and D loading is reflected in Table 8.2-1

Attached for 3rd para of para 8.2.1.2

The location of common station service transformers C and D is also shown on Figures 8.2-3 and 8.2-6A. Physical separation is 70 feet, centerline-to-centerline and 48 feet 4 inches between closest parts. Each transformer has a single primary winding and two secondary windings with automatic load tap changer units, which will adjust voltage based on the normally connected shutdown board. The primary voltage is 161-kV, the winding is rated 27/36/45 MVA, OA/FA/FA. The secondary voltage is 6.9-kV and each winding is rated 15/20/25 MVA, OA/FA/FA.

40

9

FOA/FOA

FOA/FOA

33/44/55

24/32/40

Para 8.2.1.5 transformer phase over current relays each

to the bus associated with the failed breaker.

Each common station service transformer is protected by a percentage differential relay with harmonic restraint, a sudden pressure relay, and a neutral overcurrent relay in the 6.9-kV winding neutral. The operation of the transformer protection relays will trip and lock out the power circuit breakers connecting it to the switchyard, trip and lock out associated 6.9-kV circuit breakers, and start a high-pressure sprinkler system to prevent or extinguish any possible fire. 52

The 161-kV power supply to the common station service transformers possesses a high degree of reliability even under electrical fault conditions. The following discussion describes the sequence of events following postulated faults:

1. Transmission line fault:

   If the instantaneous element of the line protective relays is actuated, the line breaker is tripped and a high speed reclosure occurs. If after the high speed reclosure the fault has not cleared, the breaker will trip again and a standard speed (synchronism check-voltage check) reclosure occurs. In the majority of cases, these reclosures restore the line back to service. However, a trip after this will lock out the breaker isolating the faulted line. There is no appreciable disturbance on the two feeders to the common station service transformers. 48

2. Transmission line fault and failure of the line circuit breaker to clear the fault.

   The corresponding main bus breakup relay and breaker failure relay is automatically initiated, starting a timer. If the fault is not cleared within the time setting of the timer, all circuit breakers connected to that bus will be tripped and locked out. With normal position of circuit breakers described previously, both offsite power circuits to the nuclear plant continue to receive power without interruption.

3. Main bus fault.

   This type of fault is detected by the bus differential protection. When initiated, it trips and locks out the circuit breakers connected to the faulted bus. The effects of this action are similar to those described under 2 above.

4. Transformer or transformer feeder faults.

   These faults cause tripping of all the transformer circuit breakers on the high and low voltage side of the

PARA 8.2.1.5

transformer. In addition, the trip relay initiates the transformer fire protection sprinkler and starts the fire pump. This event results in the loss of two of the four common station service transformers; the other two transformers continue to receive power from the main bus in the hydro switchyard.

5. Common transformer or transformer feeder fault and failure of one 161-kV circuit breaker to operate properly.

These events cause the operation of protection described under 4 above, followed by the operation of the breaker failure relay which trips all breakers connected to the bus at the time of failure. The event results in the loss of two of the four transformers; the other two transformers continue to receive power from its main bus in the hydro switchyard.

→ insert new PARA ATTACHED

Control power for power circuit breakers and associated protective relays is supplied by two independent 250V batteries and is distributed via circuit breakers on separate panels. Figures 8.2-1b and 8.2-1c show the single line diagrams for the two panels at Watts Bar Hydro Plant.

Two separate 250V dc buses are provided in these panels. Each bus can be fed from one of the two 250V battery boards through manual, mechanically interlocked, nonautomatic circuit interrupters. The power circuit breaker and associated relay control circuits are allocated to these two dc buses on the basis of switchyard connections. This allocation of control circuits ensures that the control and relay circuits of the two nuclear plant lines are fed from two independent dc distribution buses.

Should a system disturbance cause a total loss of offsite power, a black start can be accomplished for worst-case scenario in less than one hour. This is within the capacity of the vital batteries at the nuclear plant.

8.2.1.6 <u>6.9-kV Start Boards Control and Relaying</u>

<u>6.9-kV Start Buses</u>

The secondaries of common station service transformers A and B feed into two start boards containing four circuit breakers each. Two of the circuit breakers, 1512 and 1614, are the normal and alternate feeders for start bus A while breakers 1612 and 1514 are the normal and alternate feeders for start bus B. Two other breakers, 2512 and 2614, are the normal and alternate feeders for RCP start bus A, and breakers 2612 and 2514 are the normal and alternate feeders for RCP start bus B. The two circuit breakers feeding each start bus from a different common station service transformer are interlocked and the control circuits arranged in such a manner that manually-initiated high speed (six cycles or less) transfers can be made from either breaker to the other breaker. Automatic transfers can only be

ATTACHED INSERT FOR
PARAGRAPH 8.2.1.5, ITEM 5
PAGE 8.2-9

Automatic transfers only occur when the relay logic is tripping a transmission line and the associated common station service transformers.

Para 8.2.1.6

made from the normal breaker to the alternate breaker and are delayed until the bus residual voltage reduces to 30% of nominal. All automatic transfers are initiated by undervoltage on the bus. The 250V dc normal control power for the pair of breakers feeding start bus A is supplied from a separate battery and dc distribution board from that of the normal control power for the two breakers feeding start bus B. Alternate control power feeders are similarly segregated.

Manual control of the circuit breakers is provided on the electrical control board in the Main Control Room where the operator has instrumentation showing the voltage on each of the two buses and current flowing in each of the four feeder breakers. The following annunciation is provided:

1. Start Bus Fan Failure
2. Start Bus Transfers
3. Start Bus Failures or Undervoltage

Annunciation No. 3 is composed of bus differential relay operation, bus a.c. voltage failure, and control bus dc voltage failure. Start bus A is the normal feeder to 6.9 kV common board A and the alternate feeder to 6.9 kV unit boards 1A, 1C, 2A, and 2C. Start bus B is the normal feeder to 6.9 kV common board B and the alternate feeder to 6.9 kV unit boards 1B, 1D, 2B, and 2D.

6.9 kV Switchgear C and D

REPLACE WITH ATTACHED

The secondaries of common station service transformers C and D feed into 6.9 kV switchgear C and switchgear D (Figure 8.1-2A). Each switchgear contains two circuit breakers. Common station service transformer C provides alternate No. 1 (preferred) power to 6.9 kV shutdown boards 1A-A and 2A-A through circuit breaker 1712 and alternate No. 2 (preferred) power to 6.9 kV shutdown boards 1B-B and 2B-B through circuit breaker 2714. Common station service transformer D provides alternate No. 1 (preferred) power to 6.9 kV shutdown boards 1B-B and 2B-B through circuit breaker 2814 and alternate No. 2 (preferred) power to 6.9 kV shutdown boards 1A-A and 2A-A through circuit breaker 1812. These feeders are protected by overcurrent and ground overcurrent relays. All of these feeder breakers are normally closed. All alternate No. 2 feeder breakers located on the 6.9 kV Shutdown Boards are racked out during normal plant operation and are utilized only when the alternate No. 1 power supply is not available (i.e., the alternate No. 2 feeder breakers are not intended for use under any normal operating conditions). All transfers between the normal and alternate No. 1 and No. 2 feeders take place at the 6.9 kV shutdown boards.

6.9 kV Switchgear C and D Control

The normal control power for circuit breakers 1712 and 2714 is supplied from the existing 125V dc vital battery board I: the

ATTACHED FOR PARAGRAPH TITLED
"6.9kV SWITCHGEAR C & D"
(p. 8.2-10)

The secondaries of common station service transformers C and D feed into 6.9 kV switchgear C and D (Figure 8.1-2A). Each switchgear contains two circuit breakers which are aligned to the common station service transformers as follows:

1. Common station service transformer C:

   This transformer provides normal (offsite) power from the secondary Y winding to 6.9 kV shutdown board 1A-A through circuit breaker 1712 and from the secondary X winding to 6.9 kV shutdown board 2A-A through circuit breaker 2714. In addition, this transformer provides alternate (offsite) power from the secondary X winding to 6.9 kV shutdown board 1B-B through circuit breaker 2714 and from the secondary Y winding to 6.9 kV shutdown board 2B-B through circuit breaker 1712.

2. Common station service transformer D:

   This transformer provides normal (offsite) power from the secondary X winding to 6.9 kV shutdown board 1B-B through circuit breaker 2814 and from the secondary Y winding to 6.9 kV shutdown board 2B-B through circuit breaker 1812. In addition, this transformer provides alternate (offsite) power from the secondary Y winding to 6.9 kV shutdown board 1A-A through circuit breaker 1812 and from the secondary X winding to 6.9 kV shutdown board 2A-A through circuit breaker 2814.

These feeders are protected by overcurrent and ground overcurrent relays. All of these switchgear circuit breakers are normally closed. All alternate and maintenance feeder circuit breakers located on the 6.9 kV shutdown boards are open during normal plant operation and are utilized only when the normal power supply is not available (i.e., the alternate or maintenance feeder breakers are not intended for use under any normal operating conditions). All transfers between the normal, alternate and maintenance feeders take place at the 6.9 kV shutdown boards. The maintenance supplies are only to be used when both units are in cold shutdown.

operator has instrumentation showing the voltage on each of the two buses and the current flowing in each of the four feeder breakers.

The following annunciation is provided:

1. Loss of Control Power
2. Bus Failure or Undervoltage

8.2.1.7 6.9 kV Unit and RCP Board Control and Relaying

The alternate feeder to each 6.9 kV unit and RCP board is from one of the start buses with the normal feeder being from a unit station service transformer.

Each 6.9 kV unit and RCP board can be selected for automatic or manual transfer between the normal and alternate supply breakers. Manual transfers are high speed (6 cycles or less) and can be made from the normal to the alternate supply or from the alternate to the normal supply. Automatic transfers can only be made from the normal to the alternate supply. Automatic transfers initiated by loss of voltage on the unit board are delayed until the bus residual voltage decreases to 30% of nominal. Those transfers initiated by reactor trip or turbine trip signals on the unit or RCP boards are high speed transfers. Control power is from the 250V dc distribution system.

The unit and RCP boards are protected by overcurrent, ground overcurrent, and differential current protective relays. Manual control of the two feeder breakers of each board is provided in the main control room. Load shedding provisions are included for these boards and will trip the alternate supply breakers on the 6.9 kV RCP board 1C, 1D, 2C, and 2D and 6.9 kV unit board 1B, 1C, 2B and 2C. The operator has instrumentation that gives the voltage of each board and the current flowing in either of the two feeder breakers. The following annunciation is provided:

1. Unit and RCP Board Transfer
2. Unit and RCP Board Failure or Undervoltage
3. Load Shedding Initiated

Annunciation No. 2 is composed of board differential relay operation, board ac voltage failure, and control bus dc voltage failure. Annunciation No. 3 is composed of a loss of voltage on either 6.9 kV start bus A or B or a 161 kV transmission system contingency (load shedding trip circuits are manually enabled) and both units 1 and 2 tripped. ~~Unit boards 1B, 1C, 2B, and 2C are the normal power supplies to 6.9 kV shutdown boards 1A-A, 1B-B, 2A-A, and 2B-B, respectively.~~

8.2.1.8 Conformance with Standards

This section discusses provisions included in the design of the offsite (preferred) power system to achieve a system design in conformance with requirements of GDC 17, GDC 18, and NRC Regulatory Guides 1.6 and 1.32.

The following requirements of these documents apply to offsite

AUG 1987

ATTACHED INSERT FOR
(NEW SECOND PARAGRAPH ON PAGE 8.2-14)

These cables (designated P and R) are routed in close proximity to each other in the conduit vault as they transition from the cable trays to their respective CSST switchgear ductbank and in the Turbine Building as they transition from the cable trays to their respective conduits. These cables routed in free air, where they are in close proximity in the conduit vault and Turbine Building, are firewrapped to preclude one faulted circuit from affecting the other circuit.

Para 8.2.1.8

for the ~~alternate 1~~ normal circuits are routed through cable trays and separate conduits ~~and cable trays~~ through the turbine building and into the auxiliary building to the shutdown boards. The cables for the alternate ~~2~~ circuits are routed through cable trays and separate conduits ~~and cable trays~~ alongside the exterior of the turbine building, across the top of the control building, and then enter the top of the auxiliary building and drop down to the shutdown boards (Figure 8.2-6A, -6B, -6C, and -6D). This routing assures that the normal ~~alternate 1~~ and alternate ~~2~~ for each shutdown board are physically separate and independent of each other. It does result in circuits from the secondaries of CSST C (designated as R) and CSST D (designated as P) being routed on common support structures for a distance of 42 feet from a conduit vault to the Turbine Building wall. (See Figure 8.2-6b.) These tray supports are separated horizontally 6-1/2 feet, and the trays are 17 feet above grade, except where they enter the conduit vault. For this limited area, the most likely threat to either the ~~alternate 1~~ normal or alternate ~~2~~ circuits would be a runaway vehicle.

Insert new ¶ attached as Para #2

A chain link fence (see Figure 8.2-6a) separates the cable tray supports from a maintenance access road. In addition, there is a 4-foot slope from the base of the pedestal-type supports to the road which is 10 feet away. Due to the size and quantity of insulated cables in each tray, it is very unlikely that either circuit would be lost due to a collapse of a support for any reason. Since cables for each circuit are separated as 3-phase bundles in the respective P or R designated tray, phase-to-phase faults between normal or alternate circuits ~~alternate 1 or alternate 2~~ are omit considered extremely unlikely. Thus, a ground fault on one circuit is the most likely type of fault.

A ground fault or a short circuit on the secondary side of either CSST C or CSST D is cleared by operation of its respective breaker in the Watts Bar Hydro Plant 161-kV switchyard. A simultaneous fault on either of the two secondary side (6900 volt) of both CSST C and CSST D would result in the loss of all offsite power to the nuclear plant.

However, and the faulted circuits can be isolated by opening the CSST C ~~&~~ D switchgear breakers. By reclosing the Watts Bar Hydro 161-kV switchyard breakers, power can be restored to the nuclear plant shutdown boards through the unfaulted secondaries of CSST C and/or D. An alternate path is available to the shutdown boards through from the 161-kV circuits by way of CSST A and/or CSST B ~~and~~ the ~~normal supply circuit to the shutdown boards. Either operation can be accomplished in sufficient time to assure that specified acceptable fuel design limits and design conditions of the reactor coolant pressure boundary are not exceeded.~~

REPLACE WITH ATTACHED AS 4TH PARA

The offsite circuits are designed and located so as to minimize to the extent practical the likelihood of their simultaneous failure under operating and postulated accident conditions.

ATTACHED FOR 4TH PARA
ON PAGE 8.2-14

Maintenance supply circuit from the unit boards to the shutdown boards. The use of the maintenance supply can only be used during the cold shutdown mode of both units.

Para 8.2.1.8

other. All buses are provided with gas-resistant seals at entry to the switchgear.

Functional Measures

GDC 17

Each of the two 161 kV circuits providing offsite power to Watts Bar Nuclear Plant is supplied through two power circuit breakers connecting with separate sections of the main bus in the Watts Bar Hydro Plant switchyard. The two overhead transmission lines are routed to minimize the probability of their simultaneous failure. Each 161-kV line terminates at a pair of 161 - 6.9 kV common station service transformers (A and D, and B and C, respectively). Each pair of transformers, as well as the buses and cables that are used to connect them to the onsite power (standby) distribution system at the 6.9 kV shutdown boards are physically and electrically independent.

~~Upon any unit trip~~, the ~~affected~~ units 6.9 kV shutdown boards are ~~automatically~~ connected to the offsite power circuits via common station service transformer (CSST) C or D, with one power train of ~~each~~ the unit connected to ~~each~~ either transformer through the 6.9 kV shutdown boards alternate No. 1 supply breaker. If a loss of power from either CSST C or D occurs under ~~these conditions~~ normal this alignment, the affected 6.9 kV shutdown board loads will be sequentially loaded onto their respective diesel generator.

For an acceptable range of 161 kV grid conditions, either offsite power circuit can start and supply all electrical equipment that would be supplied from the Class 1E distribution systems for a design basis accident in one unit and concurrent full-load rejection in the other unit (via transformers C or D), and power at least half of all running BOP loads through transformers A or B. For this event, transformer C or D would be operating within its OA rating and adequate voltage would be supplied to the safety-related buses. ~~When~~ since the 6.9 kV shutdown boards are being supplied from transformers C and D, the load on transformers A and B has little or no effect on the 6.9 kV shutdown board voltage. A load shedding scheme is provided that would reduce the BOP loads if the 161 kV transmission system experiences any system problem that precludes the supply of adequate power ~~to the shutdown boards~~ but no credit is taken for load shedding in the system analyses.

This load shedding scheme reduces the BOP loads by tripping selected loads if both Unit 1 and Unit 2 generators are tripped and a 161kV transmission system contingency exists. A 161kV transmission system contingency is when either the SQN line or Rockwood line is out of service. Initiation of the load shedding scheme is accomplished automatically by undervoltage relays and both units' generators tripped or by the operator selecting the 161kV system contingency switch mode and both units' generators being tripped. The WBN operator will manually select the 161kV contingency position on the normal/161kV contingency switch and anytime both generators are tripped the load shedding circuits will immediately initiate a load shed command. Two reactor coolant pumps and two 6.9kV unit boards per unit are tripped by the load shedding scheme when the above conditions exist. Tripping of these loads will result in a significant reduction (50 percent of the reactor coolant pumps and unit boards) of the station load.

Para 8.2.1.8

The load shedding scheme consists of two redundant trip and lockout circuits for each circuit breaker receiving a load shed command. The redundant load shedding circuits are located in different 6.9kV start boards. One load shedding circuit associated with CSST A is in 6.9kV start board A, and the other which is associated with CSST B is in 6.9 kV start board B. Control power to the redundant auxiliary power system (APS) load shedding circuits is provided from separate 250V dc batteries/battery boards. APS load shedding circuit 1 receives control power from 250V DC Battery 1 via 250V Turbine Building Board 1 and APS circuit 2 from 250V DC Battery 2 via 250V Turbine Building Board 2. Loss of control power to either 250V Turbine Building Board initiates automatic transfer from the normal dc supply to the alternate dc supply with annunciation that auto transfer has occurred. This maximizes the ability of the load shedding scheme to operate if grid and generator conditions warrant such operation.

The 6.9 kV shutdown boards are provided with loss-of-voltage and degraded voltage relays that initiate transfer from the normal ~~(6.9 kV unit boards)~~ supply ~~to the common station service transformer C or D alternate supply~~ to the standby (diesel generator) power supply. ~~in that order of preference~~ ~~Unit generator trip signals cause automatic fast (6 cycles or less) transfer from normal supply (unit board) to the alternate power supply~~ If the standby supply is paralleled with one of the ~~other power~~ offsite supplies for testing, loss of the standby supply would cause reverse power relays to trip the standby circuit breaker. ~~If an accident signal is initiated during testing of the standby supply, the parallel connection is automatically broken, and the onsite distribution system returned to the proper configuration~~

Loss of the offsite supply would cause the instantaneous overcurrent relay to trip the standby circuit breaker, the loss of voltage relays to trip the supply breaker and loads, and subsequently the diesel generator load sequencer to load the shutdown board with the non-LOCA loads. If an accident signal is initiated during testing of the standby supply, the parallel connection is maintained unless loss of offsite power also occurs. Should a LOCA and a loss of offsite power occur when the diesel generator is parallel with the grid under test, the same sequence of events take place as loss of offsite power except the diesel generator sequencer will load the accident loads. Only one diesel generator will be in the test mode at any given time.

Replace

CSST transformers A, B, C and D trips are initiated by any transformer or line failure relay such as fault pressure, transformer overcurrent, ground current, line protection or differential relaying which cause an automatic fast transfer from the normal supply to the alternate.

to power the safety-related loads. Therefore, loss of any onsite power generation will not prevent the distribution system from being powered from the offsite circuits.

with automatic load tap changer units.

Common station service transformers C and D both have two 6.9 kV secondary windings. One secondary of ~~each~~ the transformer is the first alternate power supply for one 6.9 kV shutdown board in each unit. The other secondary is the ~~second~~ alternate power supply for the other 6.9 kV shutdown board in each unit. The impedance between the two 6.9 kV secondary windings is more than 95 percent of the sum of the H to X and H to Y winding impedances, (H refers to the primary winding). The loading on one 6.9 kV winding has little effect on the voltage at the other winding, although this effect was considered in establishing grid interface requirements.

Each normal also Each

Overcurrent relaying and loss-of-voltage relaying for the shutdown boards are coordinated so that a faulted or overloaded bus will not be transferred from one preferred power circuit to another because of depressed voltage resulting from the fault or overload. For the range of grid conditions identified as acceptable, loss of power from one offsite power circuit, whether from failure at the transmission grid interface, failure of any part of the preferred power circuit itself, or failure of part of the onsite distribution system, will not cause lost or degradation of the other offsite power circuit.

loss

The design of the control power feeders to common station service transformers (CSST) C and D switchgear and to 6.9 kV shutdown boards A-A and B-B ensures compliance with GDC-17, i.e., a loss of control power will not result in a loss of power (CSSTs C and D).

CSST C switchgear (circuit breakers 1712 and 2714) and 6.9 kV shutdown board 1A-A feeder breakers 1716, 1718, and 1932 receive normal control power from 125 VDC vital battery board (VBB)I. CSST D switchgear (circuit breakers 1812 and 2814) and 6.9 kV shutdown board 1B-B feeder breakers 1726, 1728, and 1934 receive normal control power from 125 VDC VBBII. A design basis loss of VBBI and a single failure of VBBII (lost of control power) will result in the inability to automatically trip CSSTs C and D switchgear. ~~and will inhibit the automatic transfer of 6.9 kV shutdown boards 1A-A and 1B-B to the CSSTS.~~ This does not, however, result in loss of offsite power; breakers 1712, 2714, 1812, and 2814 remain in their normally closed position and breakers ~~1716~~, 1932, ~~1728~~, and 1934 may be manually closed as necessary. Thus, TVA is in full compliance with GDC-17.

Regulatory Guide 1.6 has been implemented by providing each a.c. load group with a connection to each of the preferred source circuits. Figure 8.1-2 indicates that redundant power trains in each unit are fed from different preferred source circuits. The

Para 8.2.1.8

Replace with attached para.

two preferred source circuits are, however, shared between the two nuclear units.

Regulatory Guide 1.32 has been implemented by providing two immediate access circuits to the transmission network. Figures 8.1-2, 8.1-2A, and 8.2-1 indicate the functional arrangement of these continuously energized circuits.

The normal distribution system to the unit boards and shutdown boards is supplied by the unit station service transformers during plant operation. The common station service transformers are used to supply the power to the unit boards or offsite distribution system during generator startup or shutdown. In case of an emergency or fault of the unit station service transformers, the common station service transformers are immediately available for use as the offsite power system and provide two separate, independent, and redundant circuits to the onsite distribution system. 48

In addition to compliance with the above standards for portions of the offsite power system, the 6.9-kV start board, 6.9-kV unit

ADD

Power continuity to the 6.9KV shutdown boards is provided from common station service transformers C and D. To provide a stable voltage these transformers ~~will~~ have automatic load tap changers on each secondary, which adjust voltage based on the normally connected shutdown boards. They also have the capability to be manually adjusted from the control room, but ~~on an accident signal the operator shall restore~~ automatic operation is the normal mode.

The 6.9kv shutdown boards may also be powered from the unit boards as a maintenance supply; however its use is limited administratively to only occur with both units in cold shutdown.

ATTACHED REPLACEMENT
PARAGRAPH 8.2.1.8 ON
PAGE 8.2-16a.

The normal distribution system to the unit boards is supplied by the unit station service transformers, to the 6.9KV common boards A and B by the common station service transformers A and B and to the shutdown boards by the common station service transformers C and D during normal plant operation.

Common station service transformers A and B are used to supply the power to the unit boards and 6.9 KV common boards A and B during generator startup or shutdown.

boards, 6.9 kV RCP boards, and the associated 6.9 kV buses were procured in accordance with certain TVA standards and industry standards. TVA specifications require conformance of this equipment to such standards as the following. The overall construction, ratings, tests, service conditions, etc., are required to be in conformance to ANSI C37.20 and NEMA SG-5; the power circuit breakers are referenced to ANSI C37.4 through C37.9 and NEMA SG-4; associated relays are specified to conform to ANSI C37.1, instrument transformers to ANSI C57.13 and NEMA EI-2 and wiring to IPCEA S-61-402 and NEMA WC5. 63

The design of the equipment arrangement was also implemented to comply with GDC 3 for fire protection and with GDC 18 and Regulatory Guide 1.22 for each of periodic tests and inspections.

Criterion 18

General Design Criterion 18 requires that the offsite power circuits be designed to permit periodic inspection and testing to show:

a. 1. "The operability and functional performance of the components" of the circuits,

b. 2. The operability of the circuits as whole systems, and

c. 3. "Under conditions as close to design as practical. the full operation sequence that brings the system into operation."

normal or alternate supply (offsite)

The offsite power system has been designed to permit appropriate periodic inspection and testing. Transfers from the normal supply to the ~~preferred~~ alternate (offsite) supply or from the preferred supply to the standby supply may be manual or automatic. Testing of these transfers while the nuclear unit is at power could result in transients that could cause tripping of the reactor or turbine. For this reason, testing of the manual and automatic sequence will be performed ~~by causing a transfer from the normal supply to the first alternate (preferred) supply. Transfers from the normal to the first alternate supply is required to satisfy GDC 17 and will be tested at intervals specified in the technical specifications. Testing of the transfers from the normal supply to the second alternate (preferred) supply, and from the first alternate (preferred) supply to the second alternate (preferred) supply may be performed by TVA for economic reasons at intervals specified by TVA~~ 63 56

ADD

8.2.2 Analysis

Each 161 kV circuit and ~~its two associated~~ transformers ~~has~~ have sufficient capacity and adequate voltage to supply the essential the common station service when the unit is shutdown. C and D

Para 8.2.1.8

safety auxiliaries of one unit under loss of coolant accident conditions in addition to the power required for shutdown of the non-accident unit. ~~Figure 8.2-8 shows the station service condition when normal power for the operation of the nuclear units is supplied from the unit stations service transformers.~~

Physical separation of lines, primary and backup protection systems, and a strong transmission grid minimize the probability of simultaneous failures of offsite power sources. Results of steady-state, transient stability. and inertial pickup studies show that the offsite power sources remain intact an reliable sources to supply the onsite electric power system for the loss of either nuclear unit, the loss of 500 kV lines connecting either of these units into the transmission system and the loss of the next largest generating unit on the system, or the loss of the most critical 500-kV transmission line. The effect on the offsite power system resulting from the loss of the largest unit on the system is illustrated in Figure 8.2-8a, Sheets 1 and 2. 63

Transient stability studies included conditions of three-phase faults on transmission lines connecting the nuclear units into the transmission system. Studies of these faults included stuck-breaker conditions in which one nuclear unit and its 500 kV lines were disconnected automatically from the transmission system. The results of these studies are shown in Figure 8.2-8a, Sheets 3 through 12. These plottings show the voltage and frequency of the offsite power system during and following these disturbances. Transient stability studies of the 161 kV system supplying preferred power to the nuclear plant included three-phase faults, stuck-breaker conditions, and main bus section interruptions. 63

Due to the large number of diverse generating units and strong interconnections, the likelihood of an outage of a sufficient part of the transmission system to cause the loss of all sources of offsite power is considered to be extremely remote. An example considered to be the most severe condition of postulated transmission disturbances is one in which one nuclear unit is under loss-of-coolant accident conditions during the time when power is required for shutdown of the other non-accident unit. The study of this contingency shows that the transmission system remains stable with negligible disturbance to the sources of offsite power supply as indicated by the Watts Bar Hydro 161 kV bus voltage and frequency response curves in Figures 8.2-9 and 8.2-10.

System Operation

common station service transformers C and D through the common station service switchgear C and D circuits

Each 6.9 kV shutdown board can be powered through any one of four shutdown board supply breakers. For ~~unit startup and~~ normal operation, power is supplied from ~~the 6.9 kV unit board circuit.~~ The breakers shown normally closed are on Figure 8.1-2a. Shown normally open are the breakers connecting the ~~first~~ alternate ~~(preferred) and the second alternate (preferred)~~ (offsite) power circuits to the shutdown board (via common station service transformers C and D), ~~and~~ the breaker connecting the shutdown

source

Replace with attached para 1

Para 8.2.1.8

board to a separate standby diesel generator. During normal operation the second alternate feeder circuit breaker is racked out but may be placed back into service should the first alternate power supply become disabled.

Replace with attached para 2

Automatic slow bus transfers from the normal supply to the alternate (preferred) offsite power supply are initiated by loss of voltage. Completion of the transfer is delayed until bus residual voltage decreases to 30% of nominal. Return to the normal supply is manual only. All manual transfers and any generator trip actuated transfers are fast transfers completed in approximately six cycles. Manual transfer may be effected between any incoming feeder breakers. Manual transfers are made by holding the preferred incoming feeder breaker control switch in the "Close" position while the source breaker control switch is placed in the "Trip" position.

During conditions where neither nuclear unit nor preferred (offsite) power is available, each shutdown board is energized from a separate standby diesel generator.

Replace with attached para 3

Each 6.9 kV shutdown board is equipped with loss-of-voltage relaying. The loss-of-voltage relays initiate slow bus transfers from the normal supply to the first (or, when in use, the second) alternate or to the standby diesel generator supply, in that order of preference. When a 6.9 kV shutdown board is supplied from an alternate (preferred) supply, the loss-of-voltage relays will initiate automatic transfer from the first alternate or second alternate to the standby diesel generator supply. A slow bus transfer from the normal supply to the first (or, when in use, the second) alternate supply is supervised by residual voltage relays set to operate at 30% of nominal. The transfer from the normal supply to the second alternate supply is not normally in place because the second alternate supply breaker is normally racked out. Transfers from any source to the standby source are not supervised by these residual voltage relays. Voltage relays monitor each source and permit connection only if adequate power is available. A typical transfer scheme is shown schematically in Figure 8.3-5 for 6.9 kV shutdown board 1A-A.

Replace with attached para 4

To protect the Class 1E equipment (motors, etc.) from a sustained degraded undervoltage, each of the two 6.9 kV Class 1E buses per unit are provided with degraded voltage relaying which consists of a set of three instantaneous solid-state under-voltage relays. These relays have a nominal setpoint of 6560V ± 1/2% (95% of nominal). The relays are arranged in a two-out-of-three coincidence logic to initiate two time delay sequences (see Figure 8.3-5A). The first sequence of a maximum of 10 seconds will ride through normal system voltage transients (motor starts - both safety and non-safety related) before annunciating an undervoltage in the main control room. At the end of this sequence, if the voltage is still low and a safety injection signal has been initiated, or is subsequently initiated, load shedding from the 6.9 kV shutdown board will be initiated and the shutdown board will be subsequently transferred to its diesel generator. The

AUG 1981

ATTACHED REPLACEMENT
PARAGRAPHS FOR PAGE 8.2-19

PARAGRAPH 1

board to a separate standby diesel generator and the maintenance circuit to the shutdown boards (via the unit boards). During normal operation the alternate feeder circuit breaker may be placed into service should the normal power supply become disabled.

PARAGRAPH 2

Loss of voltage and degraded voltage from the normal source will result in an automatic transfer to the standby diesel generator power supply. Bus transfers from the normal to the alternate source shall be automatic fast bus transfer initiated by common station service transformer protection devices. Return to the normal supply is manual only. All manual transfers are fast transfers completed in approximately six cycles. Manual transfer may be effected between any incoming feeder breakers. Manual transfers are made by holding the incoming feeder breaker control switch in the "Close" position while the source breaker control switch is placed in the "Trip" position.

PARAGRAPH 3

Each 6.9 kV shutdown board is equipped with loss-of-voltage and degraded voltage relaying. The loss-of-voltage and degraded voltage relays initiate bus transfers from the normal supply to the standby diesel generator supply. When a 6.9 kV shutdown board is supplied from an alternate supply the loss-of-voltage and degraded voltage relays will also initiate automatic bus transfer to the standby diesel generator supply. Voltage relays monitor each source and permit connection only if adequate voltage is available. A typical transfer scheme is shown schematically in Figure 8.3-5 for 6.9 kV shutdown board 1A-A.

PARAGRAPH 4

To protect the Class 1E equipment (motors, etc.), each 6.9 kV Class 1E shutdown board is provided with one set of degraded voltage relays and three sets of undervoltage relays. The degraded voltage relays (27 DAT, DBT, DCT) have a voltage setpoint of ~~97~~% of 6.9 kV (nominal, decreasing).

98% AB 4-8-92

These relays are arranged in a two-out-of-three coincidence logic (Figure 8.3-5A) to initiate a 6 second (nominal) time delay. At the end of 6 seconds if the voltage is still low, an alarm will be annunciated in the Control Room, a trip of the 6.9 kV shutdown board supply breaker will occur and load shedding from this board will be initiated.

ATTACHED REPLACEMENT
PARAGRAPHS FOR PAGE 8.2-19

PARAGRAPH 4 (continued)

The undervoltage protection consists of three sets of relays. The first set of these relays (27LVA, LVB, LVC) have a voltage setpoint of 87% of 6.9 kV (nominal, decreasing). These relays are arranged in a two-out-of-three coincidence logic (Figure 8.3-5A) to initiate a time delay that is set between 0.25 and 0.5 seconds. At the end of this time delay, if the voltage is still low, a trip of the 6.9 kV shutdown board supply breaker will occur. Once the supply breakers have been opened a second set of induction disk type undervoltage relays, 27D, which has a voltage setpoint of 70% of 6.9 kV (nominal, decreasing) and an internal time delay of 0.5 seconds at zero volts, will start the diesel generator. A third set of induction disk type undervoltage relays, 27S, which has a voltage setpoint of 70% of 6.9 kV (nominal, decreasing) and an internal time delay of 3 seconds, at zero volts, will initiate load shedding of the 6.9 kV shutdown board.

The time delays associated with the 27DAT, DBT, DCT and the 27LVA, LVB, LVC relays are designed to allow for normal voltage transients on the system.

Para 8.2.1.8

DELETE

~~second sequence is long enough to allow operator action but will not result in damage to connected safety related equipment. At the end of five minutes if the degraded voltage condition has not been corrected, load shedding will be initiated and the shutdown board subsequently transferred to its diesel generator.~~

To protect the Class 1E equipment from a sustained over-voltage, each ~~of the two~~ 6.9 kV Class 1E buses per unit are provided with a set of two instantaneous solid-state overvoltage relays. These relays are arranged in a one-out-of-two ~~coincidence~~ logic which will annunciate in the main control room. The relays will have a nominal voltage setpoint of 7260 volts ± 1 percent (110 percent of motor rated voltage with a time-delay of 300 seconds). The operator will take the necessary action to reduce the voltage.

Upon receipt of the overvoltage alarm,

The loss of voltage load shedding relays are not bypassed when on diesel power, but will remain in the circuit at all times. TVA"s basis for retention of this feature is that it provides for automatic resequencing of the loads following any temporary loss of bus voltage. Since the loss-of-voltage load shedding relay setpoint is fixed at 4860 volts ± 5 percent (70 percent of ~~nominal~~) with an inverse time delay, the starting of the largest driven load will not cause actuation of the load shedding feature. Therefore, the operation of the load shedding relay system is:

6.9 kV

1. To shed the loads to prevent overloading the diesel generator.

2. Allow the diesel generator to recover to rated speed and voltage.

3. And reconnect the loads in proper sequence.

Overcurrent and differential overcurrent protective relays are provided for each shutdown board to lockout all supply breakers if the loss of voltage is caused by overload or an electrical fault. This prevents transfer of a fault between offsite power circuits or to the diesel generator. This minimizes the probability of losing electrical power from the transmission network on the onsite electrical power source.

In the event of a loss of voltage on either 6.9 kV start bus A or B or a 161 kV transmission system contingency (load shedding trip circuits are manually enabled) and both unit 1 and unit 2 tripped, the load shedding scheme will be initiated. This load shedding scheme will trip off part of the BOP loads. The alternate supply breakers on 6.9 kV unit boards 1C, 1B, 2C, and 2B; 6.9 kV RCP boards 1C, 1D, 2C and 2D; and 6.9 kV common board A, panel 16 will be tripped and locked out. The load shedding scheme is armed at all times and two redundant trip and lockout circuits are provided for each circuit breaker being load shed. These redundant circuits have coincident logic features to minimize the probability of failure to operate and spurious trips. Functional test capability is built into each load shedding circuit. The test features allow independent testing of each circuit while maintaining the load shedding feature of the circuit not undergoing testing.

TABLE 8.2-1

OFFSITE POWER SYSTEM
EQUIPMENT CAPABILITIES, WORST-CASE PARAMETERS

I. Operating Mode: Two-Unit Full Load Rejection, Common Station Service Transformers A, B, C, and D Available

~~(Common Station Service Transformer B is not as heavily loaded as Transformer A)~~

Equipment	Rating or Nominal Limits	Computed Values	Allowable Operating Time at Computed Condition
Com Sta Serv XFMR A			
H-WDG	85.1 MVA	56.68 MVA	Continuous
X-WDG	53.8 MVA	25.75 MVA	Continuous
Y-WDG	53.8 MVA	32.37 MVA	Continuous
Operating Mode: One Unit Loss of Coolant Accident, One Unit Full Load Rejection, Common Station Service Transformers A, B, C, and D available			
(Common Station Service Transformer C is not as heavily loaded as Transformer D)			
Com Sta Serv XFMR D			
H-WDG	50.4 MVA	12.97 MVA	Continuous
X-WDG	28.0 MVA	12.97 MVA	Continuous
Y-WDG	28.0 MVA	0 MVA	Continuous

replace with attached

ATTACHED REPLACEMENT FOR TABLE 8.2-1, SHEET 1

Equipment	Rating or Nominal Limits	Computed Values	Allowable Operating Time at Computed Condition
Com Sta Serv XFMR A			
H-WDG	76 MVA	48.63 MVA	Continuous
X-WDG	48 MVA	22.59 MVA	Continuous
Y-WDG	48 MVA	24.02 MVA	Continuous
Com Sta Serv XFMR B			
H-WDG	76 MVA	45.82 MVA	Continuous
X-WDG	48 MVA	22.59 MVA	Continuous
Y-WDG	48 MVA	21.47 MVA	Continuous
Com Sta Serv XFMR C			
H-WDG	55 MVA	9.89 MVA	Continuous
X-WDG	40 MVA	4.75 MVA	Continuous
Y-WDG	40 MVA	5.07 MVA	Continuous
Com Sta Serv XFMR D			
H-WDG	55 MVA	9.65 MVA	Continuous
X-WDG	40 MVA	4.55 MVA	Continuous
Y-WDG	40 MVA	5.03 MVA	Continuous

II. Operating Mode: One Unit Loss of Coolant Accident, One Unit Full Load Rejection, Common Station Service Transformers A, B, C, and D available

Equipment	Rating or Nominal Limits	Computed Values	Allowable Operating Time at Computed Condition
Com Sta Serv XFMR A			
H-WDG	76 MVA	48.46 MVA	Continuous
X-WDG	48 MVA	22.59 MVA	Continuous
Y-WDG	48 MVA	23.87 MVA	Continuous
Com Sta Serv XFMR B			
H-WDG	76 MVA	45.61 MVA	Continuous
X-WDG	48 MVA	22.59 MVA	Continuous
Y-WDG	48 MVA	21.28 MVA	Continuous
Com Sta Serv XFMR C			
H-WDG	55 MVA	10.56 MVA	Continuous
X-WDG	40 MVA	4.78 MVA	Continuous
Y-WDG	40 MVA	5.79 MVA	Continuous
Com Sta Serv XFMR D			
H-WDG	55 MVA	10.73 MVA	Continuous
X-WDG	40 MVA	5.68 MVA	Continuous
Y-WDG	40 MVA	5.05 MVA	Continuous

TABLE 8.2-1 (Con't)

OFFSITE POWER SYSTEM
EQUIPMENT CAPABILITIES, WORST-CASE PARAMETERS

Operating Mode: Two-Unit Full Load Rejection, Common Station Service Transformers A, B, C, and D Available.

(RCP Start Bus B and Start Bus B are not as heavily loaded as RCP start Bus A and Start Bus A, respectively)

RCP Start Bus A	3000 AMPS	2155 AMPS	Continuous
Start Bus A	4000 AMPS	2544 AMPS	Continuous

Operating Mode: Two-Unit Full Load Rejection, Common Station Service Transformer A Available.

Equipment	Rating or Nominal Limits	Computed* Values	Allowable Operating Time at Computed Condition
Com Sta Serv XFMR A			
H-WDG	85.1 MVA	58.68 MVA	Continuous
X-WDG	53.8 MVA	25.75 MVA	Continuous
Y-WDG	53.8 MVA	32.37 MVA	Continuous

Operating Mode: One-Unit LOCA, One-Unit FLR, Common Station Service Transformer A and D Available.

Com Sta Serv XFMR D			
H-WDG	50.4 MVA	25.10 MVA	Continuous
X-WDG	28.0 MVA	12.97 MVA	Continuous
Y-WDG	28.0 MVA	12.13 MVA	Continuous

Equipment Capabilities
Worst-Case Fault Currents

Operating Mode: Two-Unit Full Load Rejection, Common Station Service Transformers A & D Available.

Equipment	Rating or Nominal Limits	Computed Values
6.9-kV Unit BD ACB	500 MVA	461.74 MVA
6.9-kV RCP BD ACB	500 MVA	401.76 MVA[1]

Operating Mode: Two-Unit Full Load Rejection, Common Station Service Transformer A and D Available.

6.9-kV SHTDN BD ACB	500 MVA	377.10 MVA

Start Bus Automatic Transfers are not allowed between common station service Transformers A and B. Load may be added at the operator discretion.

Replace with attached

ATTACHED REPLACEMENT FOR TABLE 8.2-1, SHEET 2

III Operating Mode: One Unit Loss of Coolant Accident, One Unit Full Load Rejection, Common Station Service Transformers B and C available.

Equipment	Rating or Nominal Limits	Computed Values	Allowable Operating Time at Computed Condition
Com Sta Serv XFMR B			
H-WDG	76 MVA	57.19 MVA	Continuous
X-WDG	48 MVA	22.59 MVA	Continuous
Y-WDG	48 MVA	31.54 MVA	Continuous
Com Sta Serv XFMR C			
H-WDG	55 MVA	22.94 MVA	Continuous
X-WDG	40 MVA	11.26 MVA	Continuous
Y-WDG	40 MVA	11.68 MVA	Continuous

IV. Operating Mode: One Unit Loss of Coolant Accident, One Unit Full Load Rejection, Common Station Service Transformers A, and D available

Equipment	Rating or Nominal Limits	Computed Values	Allowable Operating Time at Computed Condition
Com Sta Serv XFMR A			
H-WDG	76 MVA	57.18 MVA	Continuous
X-WDG	48 MVA	22.59 MVA	Continuous
Y-WDG	48 MVA	31.54 MVA	Continuous
Com Sta Serv XFMR D			
H-WDG	55 MVA	22.95 MVA	Continuous
X-WDG	40 MVA	11.27 MVA	Continuous
Y-WDG	40 MVA	11.68 MVA	Continuous

TABLE 8.2-1 (Con't)

OFFSITE POWER SYSTEM
EQUIPMENT CAPABILITIES, WORST-CASE PARAMETERS

Equipment Capabilities
Voltage Limits

Equipment	Rating or Nominal Limits	Computed Values	Allowable Operating Time at Computed Condition
Balance of Plant Motors	6.6-kV Rated		
	Min Operating kV 5.940-kV	Min Anticipated 5.970-kV	Continuous
	Min Starting kV 5.610-kV	Min Anticipated 6.210-kV 5.940	Not Applicable
	Max Operating kV 7.260-kV	Max Anticipated 7.330-kV 7.260	
Class 1E Motors	6.6-kV Rated		
	Min Operating kV 5.940-kV	Min Anticipated[1] 6.555-kV 6.693	Continuous
	Min Starting kV 5.610-kV	Min Anticipated 5.764-kV 5.940	Not Applicable
	Max Operating kV 7.260-kV	Max Anticipated[2] 7.410-kV 7.250	

Notes: 1. Degraded voltage relaying setpoint.

~~2. Maximum anticipated when connected to common station service transformer C or D. The unit operator will receive an alarm signal at 7.260-kV and have the option of transferring to common station service transformers C or B, which will be less than 7.260-kV.~~

8.3 ONSITE (STANDBY) POWER SYSTEM

8.3.1 AC Power System

The onsite ac power system is a Class 1E system which consists of: (1) the Standby ac Power System, and (2) the 120V Vital ac System. The safety function of the Standby Power System is to supply power to permit functioning of components and systems required to assure that (1) fuel design limits and reactor coolant pressure boundary design conditions are not exceeded due to anticipated operational occurrences, and (2) the core is cooled and vital functions are maintained in event of a postulated accident in one unit and to safely shutdown the other unit, subject to loss of the Preferred Power System and subject to any single failure in the Standby Power System. The safety functions of the 120V Vital ac System is to supply power continuously to reactor protection, instrumentation, and control systems; engineered safety features instrumentation and control systems; and other safety-related components and systems, subject to loss of all ac power sources and any single failure within the Vital ac System.

offsite and standby

8.3.1.1 Description

Standby ac Power System

The Standby ac Power System is a safety-related system which continuously supplies power for energizing all ac-powered electrical devices essential to safety. Power continuity to the 6.9 kV shutdown boards is maintained by switching ~~among the nuclear unit source (the normal source),~~ the preferred (normal or alternate) (offsite) sources, and the standby (onsite) source. Source selection is accomplished by automatically transferring from ~~the nuclear unit source to the preferred sources~~ normal or alternate to the standby source, ~~in that order.~~ The reverse transfers are manual. The circuits connecting the normal, ~~preferred,~~ alternate and standby sources to the distribution portion of the Standby Power System are shown in Figure 8.1-2A. The normal and ~~preferred~~ alternate power circuits and the transfer scheme used to effect the source switching for these circuits is further discussed in Section 8.2.

System Structure

The standby ac auxiliary power distribution system consists of the following:

a. The four Class 1E existing diesel generator units (EDGU).

b. The 6.9 kV shutdown boards and 6.9kv shutdown relay logic panels.

c The 6900/480v transformers and the 480v shutdown boards.

AUG 1991

Para 8.3.1.1

in one room in the unit 1 area. Transformers 1B-B, 2B-B, 1C and 2C are located in one room in the unit 2 area. (Figure 8.3-2)

common station service transformers C and D through the common station service switchgear C and D circuits.

System Operation

Each 6.9 kV shutdown board can be powered through any one of four shutdown board supply breakers. For ~~unit startup and~~ normal operation, power is supplied from ~~the 6.9 kV unit board circuit~~. The breakers shown normally closed are on Figure 8.1-2A. Shown normally open are the breakers connecting the ~~first~~ alternate ~~(preferred) and the second alternate (preferred)~~ offsite power circuits to the shutdown board (via common station service transformers C and D), ~~and~~ the breaker connecting the shutdown board to a diesel generator for standby operation, and the maintenance circuit to the shutdown boards (via the unit boards). However, the maintenance source shall only be used when both units are in the cold shutdown mode. ~~The second alternate supply breaker is normally racked out.~~

For a discussion of the automatic transfer of the shutdown boards see Section 8.2-2.

~~During conditions where neither nuclear unit nor~~ When the preferred (offsite) power is not available, each shutdown board is energized from a separate standby diesel generator.

Each 6.9 kV shutdown board is equipped with loss-of-voltage and degraded voltage relaying. The loss-of-voltage and degraded voltage relays initiate ~~fast bus transfers (supervised by residual voltage relays set to operate at 30% of nominal) from the normal supply to the first alternate (preferred) or to the second alternate in that order of preference~~. When a 6.9 kV shutdown board is supplied from an alternate ~~(preferred)~~ supply, the loss-of-voltage relays will also initiate automatic transfer from the ~~first (or when in use, the second)~~ alternate to the standby diesel generator supply. Voltage relays monitor each source and permit connection only if adequate power is available. A typical transfer scheme is shown in Figure 8.3-5 for 6.9 kV shutdown board 1A-A.

a transfer to the standby diesel generator.

and degraded voltage

~~To protect the Class 1E equipment (motors, etc.) from a sustained degraded undervoltage, each of the two 6.9 kV Class 1E buses per unit are provided with degraded voltage relaying which consists of a set of three instantaneous solid state under voltage relays. These relays have a nominal setpoint of 6560V ± 1/2% (95% of nominal). The relays are arranged in~~

DELETE AND REPLACE WITH ATTACHED INSERT

ATTACHED INSERT
FOR PAGE 8.3-4

To protect the Class 1E equipment (motors, etc.), each 6.9 kV Class 1E shutdown board is provided with one set of degraded voltage relays and three sets of undervoltage relays. The degraded voltage relays (27DAT, DBT, DCT) have a voltage setpoint of 98% of 6.9 kV (nominal, decreasing).

These relays are arranged in a two-out-of-three coincidence logic (Figure 8.3-5A) to initiate a 6 second (nominal) time delay. At the end of 6 seconds if the voltage is still low, an alarm will be annunciated in the Control Room, a trip of the 6.9 kV shutdown board supply breaker will occur and load shedding from this board will be initiated.

The undervoltage protection consists of three sets of relays. The first set of these relays (27LVA, LVB, LVC) have a voltage setpoint of 87% of 6.9 kV (nominal, decreasing). These relays are arranged in a two-out-of-three coincidence logic (Figure 8.3-5A) to initiate a time delay that is set between 0.25 and 0.5 seconds. At the end of this time delay, if the voltage is still low, a trip of the 6.9 kV shutdown board supply breaker will occur. Once the supply breakers have been opened, a second set of induction disk type undervoltage relays 27D, which has a voltage setpoint of 70% of 6.9 kV (nominal, decreasing) and an internal time delay of 0.5 seconds at zero volts, will start the diesel generator. A third set of induction disk type undervoltage relays, 27S, which has a voltage setpoint of 70% of 6.9 kV (nominal, decreasing) and an internal time delay of 3 seconds, at zero volts, will initiate load shedding of the 6.9 kV shutdown board.

The time delays associated with the 27DAT, DBT, DCT and the 27LVA, LVB, LVC relays are designed to allow for normal voltage transients on the system.

Paragraph 8.3.1.1

DELETE

~~a two out of three coincidence logic to initiate two time delay sequences (see Figure 8.3-5A). The first sequence of a maximum of 10 seconds will ride through normal system voltage transients (motor starts - both safety and nonsafety related) before annunciating an undervoltage in the main control room. At the end of this sequence, if a safety injection signal has been initiated, or is subsequently initiated, load shedding from shutdown board will be initiated and the shutdown board subsequently transfer to its diesel generator. The second sequence is long enough to allow operator action but will not result in damage to connected safety related equipment. At the end of five minutes if the degraded voltage condition has not been corrected, load shedding will be initiated and the shutdown board subsequently transferred to its diesel generator.~~

~~To protect the Class 1E equipment from a sustained over voltage, each of the two 6.9 kV Class 1E buses per unit are provided with a set of two instantaneous solid state overvoltage relays. These relays are arranged in a one out of two coincidence logic which will annunciate in the main control room. The relays will have a nominal voltage setpoint of 7260 volts ± 1 percent (110 percent of motor rated voltage). The operator will take the necessary action to reduce the voltage.~~ 63

~~The loss of voltage load shedding relays are not bypassed when on diesel power, but will remain in the circuit at all times. TVA's basis for retention of this feature is that it provides for automatic resequencing of the loads following any temporary loss of bus voltage. Since the loss of voltage load shedding relay setpoint is fixed at 4860 volts ± 5 percent (70 percent of nominal) with an inverse five second time delay, the starting of the largest driven load will not cause actuation of the load shedding feature. Therefore, the operation of the load shedding relay system is:~~

1. To shed the loads to prevent overloading the diesel generator.

2. Allow the diesel generator to recover to rated speed and voltage.

3. And reconnect the loads in proper sequence.

Overcurrent and differential overcurrent protective relays are provided for each shutdown board to lockout all supply breakers if the loss of voltage is caused by overload or an electrical fault. This prevents transfer of a faulted bus between offsite power circuits or to the diesel generator. This minimizes the probability of losing electrical power from the transmission network or the onsite electrical power source.

A ~~sustained~~ loss ~~(longer than 1.5 seconds)~~ of voltage on the 6.9kV

DELETE AND REPLACE WITH ATTACHED TWO PARAGRAPHS

ATTACHED REPLACEMENT
PARAGRAPHS FOR PAGE 8.3-5

To protect the Class 1E equipment (motors, etc.) from a sustained over-voltage, each 6.9 kV Class 1E bus is provided with a set of two instantaneous solid-state overvoltage relays. The relays are arranged in a one-out-of-two logic which will annunciate in the main control room. The relays will have a nominal voltage setpoint of 7260 volts ± 1 percent (110 percent of motor rated voltage). The operator will take the necessary action to reduce the voltage.

The loss of voltage load shedding relays are not bypassed when on diesel power, but will remain in the circuit at all times. TVA's basis for retention of this feature is that it provides for automatic resequencing of the loads following any temporary loss of bus voltage. Since the loss-of-voltage load shedding relay setpoint is fixed at 4860 volts ± 5 percent (70 percent of 6.9kV) with an internal time delay of 3 seconds at zero volts, the starting of the largest driven load will not cause actuation of the load shedding feature. Therefore, the operation of the load shedding relay system is:

DELETE AND REPLACE WITH ATTACHED PARAGRAPH

~~shutdown board starts the diesel generator and initiates (after an additional 3.5 seconds) logic that trips the normal or alternate feeder breakers, all 6900V loads (except the 480V shutdown board transformers), and the major 480V loads. Table 8.3-2 shows the loads that are automatically stripped. Figures 8.3-6 thru 8.3-13 show the load stripping schematically. When the diesel generator has reached rated speed and voltage, the generator will be automatically connected to the 6.9 kV shutdown board bus. (Refer to Figure 8.3-14.) This return of voltage to the 6.9 kV shutdown bus initiates logic which connects the required loads in sequence. Table 8.3-3 shows the order of applied loads. The standby (onsite) power system's automatic sequencing logic is designed to automatically connect the required loads in proper sequence should the logic receive an accident signal prior to, concurrent with, or following a loss of all nuclear unit and preferred (offsite) power.~~

There are no automatic transfers of board supplies between redundant power sources. All 480V shutdown boards and all motor control centers have alternate feeders to their respective board buses. Transfers between the normal and alternate feeders are manual. Some manual transfers of loads between power trains are used. These transfers are tabulated in Table 8.3-10. 56 63

All circuit breakers supplying the alternate feeders for the manual transfers in Table 8.3-10 [with the exception of the spent fuel pit pump C-S, the 125V auxiliary feedwater turbine (AFWT) dc manual transfer switch (units 1 and 2), and the 120V AFWT AC manual transfer switch (units 1 and 2)] are normally opened. The transfer switches are mechanically interlocked to prevent closing a switch in a manner to parallel both feeds. For the components where power supply alignment is critical (battery chargers, inverters, and component cooling water pump C-S) the alternate feeder breakers are verified open in accordance with the technical specifications. For the other components (spent fuel pit pump C-S and turbine driven auxiliary feedwater pump control power) where power supply alignment is not important; breaker position verification is not required. 56 63

A manual means of supplying power to the 480V Auxiliary Building common board (which is not normally supplied power from the diesel generators during a condition where offsite power is lost) is provided. Provisions have been made to manually connect this board to the 480V shutdown boards 1B2-B and 2B2-B. This is shown in Figure 8.3-15. The purpose of these feeders is to provide power to operate the ice condenser refrigeration units, located on the 480V Auxiliary Building common board and glycol pumps, located on the 480V Auxiliary Building MCC B and C, during the unlikely condition of a loss of offsite power that exceeds 2 to 3 days. The two normal bus feeder breakers must be moved from their normal compartments to the compartments which are connected to the 480V shutdown boards 1B2-B and 2B2-B.

System Instrumentation

Remote instrumentation of the 6.9 kV shutdown boards consist of

ATTACHED REPLACEMENT
PARAGRAPH FOR PAGE 8.3-6

shutdown board starts the diesel generator and initiates logic that trips the supply feeder breakers, all 6900V loads (except the 480V shutdown board transformers), and the major 480V loads. Table 8.3-2 shows the loads that are automatically stripped. Figures 8.3-6 thru 8.3-13 show the load stripping schematically. When the diesel generator has reached rated speed and voltage, the generator will be automatically connected to the 6.9 kV shutdown board bus. (Refer to Figure 8.3-14). This return of voltage to the 6.9 kV shutdown bus initiates logic which connects the required loads in sequence. Table 8.3-3 shows the order of applied loads. The standby (onsite) power system's automatic sequencing logic is designed to automatically connect the required loads in proper sequence should the logic receive an accident signal prior to, concurrent with, or following a loss of all nuclear unit and preferred (offsite) power.

Paragraph 8.3.1.1

cuits is shown in Figures 8.3-25 thru 8.3-29. Remote control of the engine from the Main Control Room is accomplished through interposing relays located in the diesel building. The schematic for this control is shown in Figure 8.3-29.

The 6.9 kV shutdown boards in each power train derive ~~normal~~ power from ~~a circuit from the 6.9 kV unit board, preferred power from~~ preferred power from CSST C and D or from their respective standby power source. During conditions where ~~neither~~ the ~~nuclear unit nor~~ preferred (offsite) ~~power~~ is not ~~are~~ available, each 6.9 kV shutdown board is energized from a separate source standby diesel generator set.

~~A sustained (longer than 1.5 seconds) loss of voltage on the 6.9 kV shutdown board starts the diesel generator and initiates (after an additional 3.5 seconds) logic that trips the normal or alternate feeder breaker, all 6900V loads except the 480V shutdown board transformers, and the major 480V loads. Table 8.32 shows the loads that are automatically tripped. When the diesel generator set has reached rated speed and not less than 75% of rated voltage, it is automatically connected to the 6.9 kV shutdown board bus. The return of voltage to the 6.9 kV shutdown bus initiates logic which connects the required loads in sequence. Table 8.3-3 shows the order in which loads are applied.~~

DELETE AND REPLACE WITH ATTACHED PARAGRAPH

As shown in Table 8.3-3, there are two loading sequences. One, which is applied in the absence of a "safety injection signal (SIS)," the "nonaccident condition," and the other, the "Accident condition," applied when a safety injection signal is received prior to or coincident with a sustained loss of voltage on the 6.9-kV shutdown board. A loss of offsite power coincident with a safety injection signal is the design basis event; however, a safety injection signal received during the course of a nonaccident shutdown loading sequence will cause the actions described below:

1. Loads already sequentially connected which are not required for an accident will be disconnected.

2. Loads already sequentially connected which are required for an accident will remain connected.

3. Loads awaiting sequential loading that are not required for an accident will not be connected.

4. Loads awaiting sequential loading that are required for an accident will either be sequentially loaded as a result of the non-accident loading sequence or have their sequential timers reset to time zero from which they will then be sequentially loaded in accordance with the accident sequence. Refer to Section 8.1.5.3 for the degree of compliance to Regulatory Guide 1.9.

A safety injection signal received in the absence of a sustained loss of voltage on a 6.9 kV shutdown board will start the diesel generators but will not connect them to the shutdown boards. There are no automatic transfers of shutdown boards between standby power supplies in compliance with Regulatory Guide 1.6.

ATTACHED REPLACEMENT
PARAGRAPH FOR PAGE 8.3-10

A loss of voltage on the 6.9 kV shutdown board starts the diesel generator and initiates logic that trips the supply feeder breakers, all 6900V loads except the 480V shutdown board transformers, and the major 480V loads. Table 8.3-2 shows the loads that are automatically tripped. When the diesel generator set has reached rated speed and not less than 95% of rated voltage, it is automatically connected to the 6.9 kV shutdown board bus. The return of voltage to the 6.9 kV shutdown bus initiates logic which connects the required loads in sequence. Table 8.3-3 shows the order in which loads are applied.

Para 8.3.1.1

The events which initiate a safety injection signal are discussed in Chapter 7.

For test and exercise purposes, a diesel generator may be manually paralleled with a normal or ~~preferred~~ alternate (offsite) power source. A loss of offsite power ~~and a safety injection signal~~ will automatically override the manual controls and establish the appropriate alignment.

The diesel can be started by manually operated emergency start switches located on the unit control board in the MCR and Auxiliary Control Room. (The diesel also has a local manual start switch as well as remote start from the MCR for test purposes). Automatic starting is from an accident signal or a loss of voltage or degraded voltage signal. All automatic and emergency start signals operate to deenergize a normally energized control circuit. These signals also operate a lockout relay that removes all manually operated stop signals except emergency stop and all protective relaying on the generator except generator differential. The lockout relay must be manually reset to return the D/G to its standby alignment at the diesel generator relay panel in the diesel building or the ADGU Building. A local idle start switch is provided to start and run the engine at idle speed for durations of unloaded operation. During this type operation any emergency signal will cause the engine to go to full speed and complete the emergency start sequence.

AUG 1991

Para 8.3.1.1

Motor Insulation

For most applications insulation is Class B. Motors in areas which are subject to unusual operating conditions either during normal, emergency, or accident operation are designed to be suitable for operation in these environments. These include conditions such as gamma radiation and high humidity, temperature, and pressure.

Interrupting Capacity of Distribution Equipment

The criteria for selecting the interrupting capacity of switchgear are as set forth in ANSI Standard C37.01 for 6900-volt circuits and C37.13, Section 13-9.3.5 for 480-volt circuits. No circuit interrupter is applied in a circuit where it would be required to interrupt a current exceeding its interrupting rating.

Motors rated at and above 400 horsepower are supplied at 6900 volts. The switchgear interrupting rating is 500 MVA, or a maximum of 41,000 amperes. ~~See Table 8.2-1 for interrupting duty.~~ 52 55

Motors below 400 horsepower are supplied at 480 volts. The smaller motors, in general 50 horsepower and below, are fed from 480-volt motor control centers. Larger motors are usually fed from 480-volt metal-enclosed switchgear (load centers), unless frequency of operation or location of motor relative to a feeder board indicate otherwise. Current limiting fuses are provided in 480-volt motor control center feeders with thermal-magnetic molded-case circuit breakers to limit the available fault current to the breakers' interrupting rating of 14,000 amperes. 52

Electric Circuit Protection

The auxiliary power system for each unit ~~normally~~ receives power from unit station service transformers and common station service transformers C & D. During startup, shutdown, and loss of ~~normal~~ the power supply to a 6900-volt unit board for any reason ~~the unit, RCP, and shutdown boards~~ will be supplied by ~~the~~ common station service transformers A and B. Whether the 6900-volt boards are being supplied by their normal sources or alternate sources, the entire a.c. auxiliary power system, from the station service transformer to the emergency load motor control center electrically farthest from the sources, is a coordinated selective trip system. 52

Motor feeder protection is selected and set to protect the motor and its cable. It is backed up by the next upstream circuit breaker in the event it should fail to open its circuit under fault. Backup protection will isolate the board feeding the faulted circuit but will not necessarily protect the circuit with the failed breaker against damage. 52

REPLACE

Add

[unit auxiliaries and the RCP boards

The shutdown boards will be supplied from common station service transformers C and D.]

Para 8.3.1.1

The diesel generator is 6900V, 3-phase, wye-connected with the neutral grounded through a relatively high ohmic resistance to keep ground fault currents to a low level. The maximum ground fault current available from the diesel generator is approximately 5 amperes. Ground faults are detected by a voltage relay across the neutral grounding resistor. Grounds cause an alarm but do not cause any breaker operation.

The 480V systems are supplied through Δ-Δ transformers, and 480V systems are not grounded. This permits minimum disturbance to service continuity. Ground detectors are provided on each 480V load center to indicate the presence of a grounded-phase conductor. No ground fault relaying was required since there would be only a very small current flowing to a single-line-to-ground fault. A ground fault on more than one phase is a line-to-line fault and will trip the feeder breakers of the faulted circuits.

Sharing of the ac Distribution Systems and Standby Power Supplies

The onsite ac power distribution system for Watts Bar Nuclear Plant is divided into two divisions or trains in each unit (A and B). Each power train is made up of a 6900V switchgear (6900V shutdown board), 480V power transformers and switchgear, and 480V motor control centers. Each power train, through its 6900V shutdown board, has power connections to a unit generator, both offsite power circuits, and a dedicated diesel generator. Except for the ~~unit and~~ offsite (preferred) power supplies, there are no ac power connections between the onsite power trains within a unit or between the two units.

Safety systems that are shared between the two Watts Bar units are listed in FSAR Section 3.1.2 under Criterion 5 (GDC-5) - Compliance. Therefore, there are electric motors powered by the onsite distribution system of one unit that drive safety-related machinery (i.e. essential raw cooling water pumps, component cooling system pumps) required for safe shutdown of the other unit. For example, the ERCW system is arranged in two headers (trains) each serving certain components in each unit (see FSAR Section 9.2.1.2). There are eight ERCW pumps arranged electrically so that two pumps are fed from each shutdown board (1A-A, 1B-B, 2A-A, 2B-B). Only one pump per board can be automatically loaded on a DGU at any one time. The pumps supplied from the 'A' boards pump into the 'A' train header and likewise the 'B' pumps. The minimum combined safety requirements for one 'accident' unit and one 'non-accident' unit are met by only two pumps on one header (train).

TABLE 8.3-4

UNIT 1 POWER TRAIN A BOARD LOADING

	Board Bus Rating kVA	Connected Load kVA*	Max. Load Demand kVA*	Mode to Maximum Demand k
6.9kV Shutdown Bd 1A-A	14,300	~~8,207~~ 9281	~~5,576~~ 5771	A
480V Shutdown Bd 1A1-A (3200/1600 a bus)	2660/1330	2077/1671	1569/1162	~~B1/B1~~ B/B
480V Shutdown Bd 1A2-A (3200/1600 a bus)	2660/1330	1517/1004	1370/853	~~B1/B1~~ B
Reactor MOV Bd 1A1-A	498.8	~~262~~ 131	~~101~~ 102	B
Reactor MOV Bd 1A2-A	498.8	~~152~~ 137	~~48~~ 137	~~A or~~ B
Con & Aux Bldg Vent Bd 1A1-A	498.8	~~428~~ 459	~~392~~ 445	A
Con & Aux Bldg Vent Bd 1A2-A	498.8	~~401~~ 443	~~341~~ 385	~~A or~~ B
Reactor Vent Bd 1A-A	498.8	~~487~~ 589	~~355~~ 407	C
Diesel Aux Bd 1A1-A	498.8	~~101~~ 127	~~85~~ 123	~~B~~ A
Diesel Aux Bd 1A2-A	498.8	125	~~45~~ 125	~~B~~ A

2122/1530

1800/1217

1900/1063

2283/1240

+Code for Mode of Maximum Demand kVA

A - Accident shutdown with normal power available
B - ~~Nonaccident shutdown with normal power available~~ Normal operation/shutdown
~~B1 - Code B plus most heavily loaded MCC manually transferred~~
C - Unit shutdown in maintenance condition

*Connected Load figures include valves, motor operated doors, elevators, air-conditioning, and space heating.

Revised by Amendment 52

TABLE 8.3-5

UNIT 1 POWER TRAIN B BOARD LOADING

	Board Bus Rating kVA	Connected Load kVA*	Max. Load Demand kVA*	Mode to Maximum Demand k
6.9 Shutdown Bd 1B-B	14,300	~~8494~~ 9372	~~6105~~ 5668	A
480V Shutdown Bd 1B1-B (3200/1600 a bus)	2660/1330	2139/1432	1850/1143	~~B1/B1~~ B/B
480V Shutdown Bd 1B2-B (3200/1600 a bus)	2660/1330	1809/1189	1644/1021	~~B1/B1~~ B
Reactor MOV Bd 1B1-B	498.8	~~181~~ 126	~~103~~ 98	B
Con & Aux Bldg Vent Bd 1B1-B	498.8	~~160~~ 448	~~69~~ 434	~~A or B~~ A
Con & Aux Bldg Vent Bd 1B2-B	498.8	~~471~~ 476	~~435~~ 424	A
~~Con & Aux Bldg Vent Bd 1B2-B~~ Reactor MOV Bd 1B2-B	498.8	~~436~~ 165	~~395~~ 165	B
Reactor Vent Bd 1B-B	498.8	~~478~~ 605	~~277~~ 387	C
Diesel Aux Bd 1B1-B	498.8	~~92~~ 118	~~85~~ 114	~~B~~ A
Diesel Aux Bd 1B2-B	498.8	~~84~~ 83	~~12~~ 82	~~B~~ A

+Code for Mode of Maximum Demand kVA
A - Accident shutdown with normal power available
B - Nonaccident shutdown with normal power available — Normal operation/shutdown
~~B1 - Code B plus most heavily loaded MCC manually transferred~~
C - Unit shutdown in maintenance condition

*Connected load figures include valves, motor operated doors, elevators, air-conditioning, and space heating.

2368/1445

2108/1390

1940/1013

1761/1239

TABLE 8.3-6

UNIT 2 POWER TRAIN A BOARD LOADING

2063/1493 8976 2055/1345

	Board Bus Rating kVA	Connected Load kVA*	Max. Load Demand kVA*	Mode to Maximum Demand k
6.9kV Shutdown Bd 2A-A	14,300	~~8365~~	~~5742~~ 4767	A
480V Shutdown Bd 2A1-A (3200/1600 a bus)	2660/1330	1987/1581	1569/1162 1576/1018	~~B1/B2~~ B/B
480V shutdown Bd 2A2-A (3200/1600 a bus)	2600/1330	1765/1145	1683/1060 1789/1267	~~B1/B2~~ B
Reactor MOV Bd 2A1-A	498.8	~~203~~ 85	~~69~~ 65	B
Reactor MOV Bd 2A2-A	498.8	~~148~~ 186	~~48~~ 186	~~B or B2~~ B
Con & Aux Bldg Vent Bd 2A1-A	498.8	~~516~~ 486	~~479~~ 440	A
Con & Aux Bldg Vent Bd 2A2-A	498.8	~~411~~ 421	~~365~~ 369	B
Reactor Vent Bd 2A-A	498.8	~~467~~ 591	~~354~~ 393	C
Diesel Aux Bd 2A1-A	498.8	~~92~~ 116	~~88~~ 114	~~B~~ A
Diesel Aux Bd 2A2-A	498.8	83	~~42~~ 83	~~B~~ A

+Code for Mode of Maximum Demand kVA

A - Accident shutdown with normal power available

B - Nonaccident shutdown with normal power available — Normal operation/shutdown

~~B1 - Code B plus most heavily loaded MCC manually transferred~~

C - Unit shutdown in maintenance condition

*Connected load figures include valves, motor operated doors, elevators, air-conditioning, and space heating.

TABLE 8.3-7

UNIT 2 POWER TRAIN B BOARD LOADING

	Board Bus Rating kVA	Connected Load kVA*	Max. Load Demand kVA*	Mode to Maximum Demand k
6.9kV Shutdown Bd 2B-B	14,300	~~8489~~ 8447	~~6067~~ 5035	A
480V Shutdown Bd 2B1-A (3200/1600 a bus)	2660/1330	2138/1546 2171/1419	1740/1147 1761/1019	~~B1/B1~~ B/B
480V shutdown Bd 2B2-B (3200/1600 a bus)	2600/1330	1803/1085 2120/1279	1740/1067 1781/1119	~~B1/B1~~ B
Reactor MOV Bd 2B1-B	498.8	~~204~~ 84	~~73~~ 59	B
Reactor MOV Bd 2B2-B	498.8	~~171~~ 211	~~69~~ 211	A
Con & Aux Bldg Vent Bd 2B1-B	498.8	~~492~~ 396	~~447~~ 356	A
Con & Aux Bldg Vent Bd 2B2-B	498.8	~~316~~ 325	~~274~~ 272	A
Reactor Vent Bd 2B-B	498.8	~~456~~ 598	~~345~~ 385	C
Diesel Aux Bd 2B1-B	498.8	~~91~~ 117	~~85~~ 114	~~B~~ A
Diesel Aux Bd 2B2-B	498.8	~~90~~ 101	~~50~~ 94	~~B~~ A

+Code for Mode of Maximum Demand kVA
A - Accident shutdown with normal power available
B - ~~Nonaccident shutdown with normal power available~~ Normal operation/shutdown
~~B1 - Code B plus most heavily loaded MCC manually transferred~~
C - Unit shutdown in maintenance condition

*Connected load figures include valves, motor operated doors, elevators, air-conditioning, and space heating.

Revised by Amendment 52

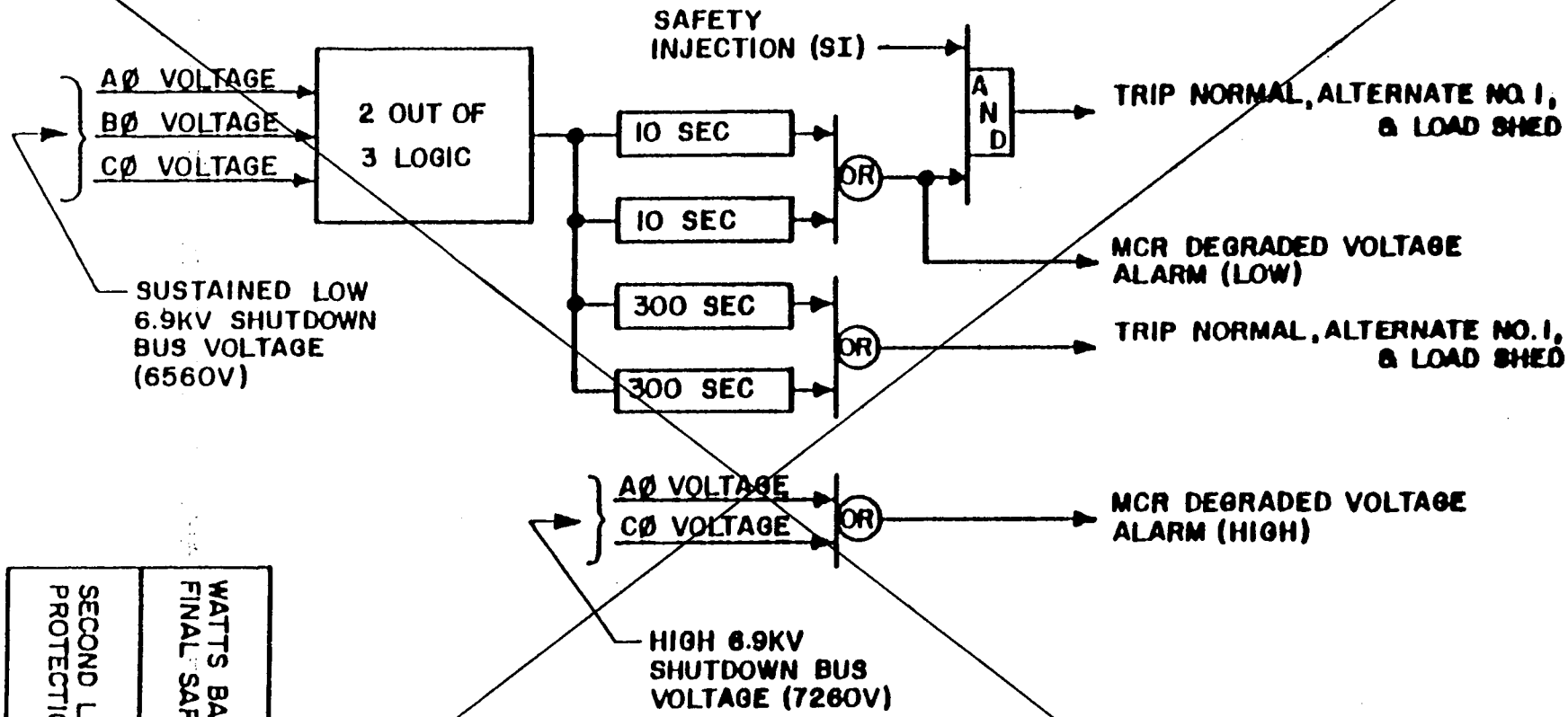

WATTS BAR NUCLEAR PLANT
FINAL SAFETY ANALYSIS REPORT

SECOND LEVEL VOLTAGE PROTECTION FIGURE 8.3-5a

Replace with following new Figure 8.3-5a

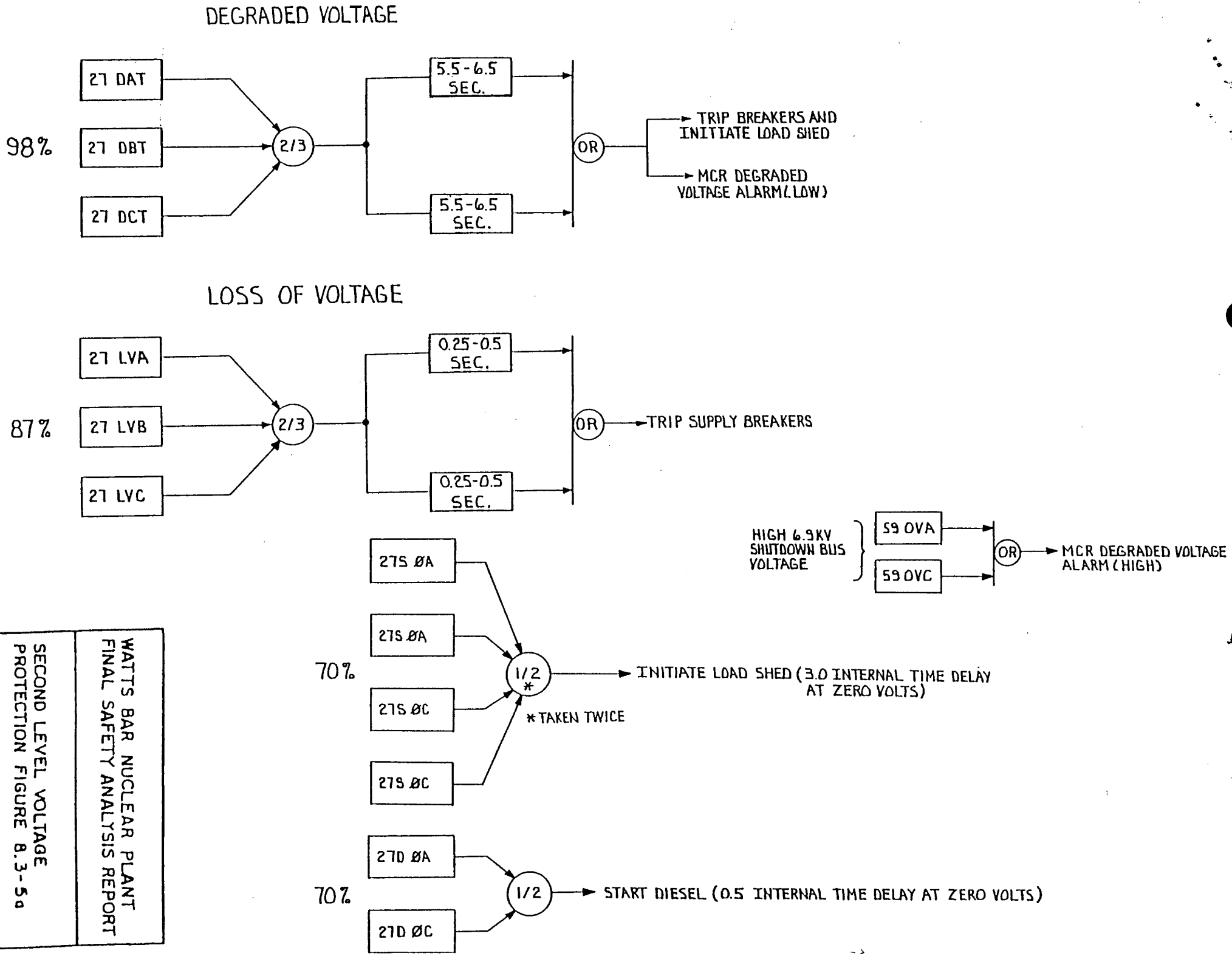

WATTS BAR NUCLEAR PLANT
FINAL SAFETY ANALYSIS REPORT

SECOND LEVEL VOLTAGE PROTECTION FIGURE 8.3-5a