TENNESSEE VALLEY AUTHORITY
CHATTANOOGA, TENNESSEE 37401
400 Chestnut Street Tower II

August 26, 1985

Director of Nuclear Reactor Regulation
Attention: Ms. E. Adensam, Chief
Licensing Branch No. 4
Division of Licensing
U.S. Nuclear Regulatory Commission
Washington, D.C. 20555

Dear Ms. Adensam:

In the Matter of the Application of	)	Docket Nos. 50-390
Tennessee Valley Authority	)	50-391

Enclosed are changes to the Watts Bar Nuclear Plant (WBN), units 1 and 2 Final Safety Analysis Report (FSAR) which are necessary as a result of TVA's verification that the as-built plant is in conformance with the description in the FSAR as amended. These changes include revisions to Sections 6.1, 6.2, and 6.3 and Chapter 7. These changes will be included in the next amendment (56) to the WBN FSAR.

If there any questions, please get in touch with K. P. Parr at FTS 858-2682.

Very truly yours,

TENNESSEE VALLEY AUTHORITY

J. A. Domer

J. A. Domer, Chief
Nuclear Licensing Branch

Sworn to and subscribed before me
this 26th day of Aug, 1985

Bryant M. Lowery
Notary Public
My Commission Expires 4/8/86

Enclosure
cc: U.S. Nuclear Regulatory Commission (Enclosure)
Region II
Attention: Dr. J. Nelson Grace, Regional Administrator
101 Marietta Street, NW, Suite 2900
Atlanta, Georgia 30323

8509030427 850826
PDR ADOCK 05000390
A PDR

B001
1/1

6.1.2.4 Identification Tags

Valves	Mass, lbs
ABS (acrylonitrile-butadiene-styrene)	50
Instruments	
ABS (acrylonitrile-butadiene-styrene)	30

6.1.2.5 Valves and Instruments Within Containment Diaphragms, O-Rings, Solenoid Seals

Buna-N (acrylonitrile-butadiene)	130

6.1.2.6 Heating and Ventilating Door Seals

Neoprene (chloroprene)	100

6.1.3 Post Accident Chemistry

The only soluble acids and bases identified within the containment are boric acid (H_3BO_3), Lithium Hydroxide (LiOH) and sodium tetraborate ($Na_2B_4O_7$). Boric acid is present in three concentrations, (2000, 2100, and 1950 ppm boron) in the various reactor fluids. LiOH is present in the reactor coolant within a range of 0.7 to 7.6 ppm Li. Sodium tetraborate is present at 1800 ppm boron in the ice of the ice condenser. 52 55

6.1.3.1 Boric Acid, H_3BO_3 40

Boric acid at a maximum concentration of ~~2000~~ 2100 ppm is found in the reactor coolant loop (4 loops, reactor vessel, pressurizer), and boric acid at a maximum concentration of 2100 ppm boron is found in the upper head injection subsystem, cold leg injection accumulators, and refueling water storage tank. These subsystems when at maximum volume represent a total mass of boric acid in the amount of ~~44,930~~ 45,700 pounds. This limit may be exceeded during mode 6 operation.

Boric acid at a maximum concentration of 2100 ppm boron is found in the boron injection tank. The tank holds approximately 90 pounds of boric acid in the form, H_3BO_3.

6.1.3.2 Lithium Hydroxide 52

Lithium Hydroxide at a maximum concentration of 7.6 ppm lithium is found in the reactor coolant system. 55

6.1.3.3 Sodium Tetraborate

Sodium tetraborate is an additive in the ice stored in the ice condenser. The nominal weight of ice in the ice condenser is

Following a LOCA, the emergency core cooling solution recirculated in containment is composed of boric acid (H_3BO_3) from the reactor coolant, refueling water (RWST), and upper head injection surge tank, lithium hydroxide (LiOH) from the reactor coolant and sodium tetraborate ($Na_2B_4O_7$) from the ice condenser ice.

and B actuation signals and power. Electronic buffering prevents an electrical failure in one train from affecting the performance of the other. To enhance the effectiveness of the third isolation valve as a barrier to leakage, the enclosed volume between the second and third isolation valves is opened to the annulus during isolation. Opening this enclosed space to the annulus is accomplished with leakoff facilities as shown in Figure 6.2.3-2 (Typical Purge Penetration Arrangement). This allows the negative pressure in the annulus to include this small volume, and leakage from the primary containment outward or leakage from outside the Shield Building inward will be drawn into the annulus for processing. The lines provided with this feature are those for the primary containment purge supply and exhaust and the lower compartment pressure relief.

Electrical penetrations are of either a cable tray/cable slot type or a conduit type. Typical seals for these penetrations are shown in Figure 6.2.3-3. For cable tray/cable slot penetrations, silicone room temperature vulcanizing (RTV) foam is used as the sealant around cables within the wall opening over a portion of the length of the cable slot penetration. In conduit penetrations, the interstitial spaces between cables and conduit or condulet walls are filled with RTV silicone rubber as the sealant over a portion of the length of the penetration. The leakage rate for electrical penetrations is limited to 0.014 cfm per square inch when secondary containment is at a minus 0.5 inch water gage. 29

The total expected infiltration rate across all leakage paths into the annulus is ~~100~~ 500 cfm at a negative annulus pressure of 0.5 inch water gauge. During normal operation the annulus will be maintained at a negative pressure of five inches water gauge. ~~At a negative pressure of five inches water gauge, the total infiltration rate into the annulus is not expected to exceed 300 cfm.~~ 1400 The former figure is the rate expected during operation of the EGTS air cleanup subsystem and represents ~~38.4 percent of~~ almost two times the annulus free volume per day. Periodic tests will demonstrate that inleakage is less than this value.

The fraction of primary containment leakage which may bypass the Shield Building and go directly to the Auxiliary Building is specified to be no greater than ~~10~~ 25 percent of the total primary containment leakage. Permitting this leakage fraction results in acceptable site boundary and LPZ doses for the loss-of-coolant accident condition as described in Chapter 15. There are no paths by which primary containment leakage may bypass both the Shield Building and the Auxiliary Building. Technical Specifications relating to bypass leakage are provided in Chapter 16.

152

All auxiliary building ventilation supply and exhaust ducts are provided with two low leakage isolation dampers in series. These two isolation dampers are heavy duty with resilient seals along the blade edges. In all cases, one damper in each pair is located inboard and one outboard of the containment barrier. The dampers are motor operated and fail in the closed position upon loss of power. 52

All entrances and exits to those portions of the Auxiliary Building within the containment barrier for both equipment and personnel are through air locks. The air lock locations are shown in Figures 1.2-3 and 1.2-5. The doors in each air lock are electrically interlocked such that only one side of the air lock can be opened at a time. Local and control room alarms are provided should both sides of an air lock ever be opened simultaneously. As a safety precaution, an interlock defeat switch is mounted on the containment side of each air lock to allow emergency egress should either side of the air lock be blocked open in an accident. The railway access doors and hatches are described in Section 3.8.4.

A special case is the interlock system for the large exterior door to the railway loading area. The large door is treated as one side of the air lock and either the two doors leading to the fuel handling area or the railway access hatch covers above can act as the other side of the lock. When the large railroad door is open, neither of the doors to the fuel handling area nor the access hatches above can be opened, and when either of these two doors and either of the access hatches above are open, the large railway access door cannot be opened. These doors are also provided with local and Main Control Room alarms should both sides of the air lock ever be opened simultaneously. The total expected infiltration rate into the ABSCE at a pressure of -0.25 inches water gauge is ~~6000~~ 7000 cfm. This represents 248 percent of the ABSCE free volume per day. Periodic tests will demonstrate that inleakage is less than the design value.

INTERIM AUXILIARY BUILDING SECONDARY CONTAINMENT ENCLOSURE

The auxiliary building secondary containment enclosure (ABSCE) is that portion of the auxiliary building which serves to maintain an effective barrier for airborne radioactive contaminants released in the auxiliary building during abnormal events. Mechanical and electrical penetrations of this enclosure are provided with seals to minimize infiltration; airlock-type doors are provided at all portals. A negative pressure is maintained within the ABSCE to ensure that no contaminated air is released to the environs following an abnormal event without first being processed by an air cleanup unit, the Auxiliary Building Gas Treatment System (ABGTS). The ABSCE is outlined in FSAR figures 44

452

failure destroying the capability to process Auxiliary Building air prior to its release to the atmosphere. Two concrete walls and a distance of more than 80 feet separate the two trains. Each of these constitutes the only engineered safety feature equipment installed in its respective room. The use of separate trains of the Emergency Power System to drive the air cleanup trains gives further assurance of proper equipment separation.

The review of the Auxiliary Building Gas Treatment System conducted to determine its conformance with Regulatory Guide 1.52 has shown that this system, designed prior to issurance of the guide, is in good general agreement with these requirements. Details on this compliance with Regulatory Guide 1.52 are given in Table 6.5-2.

The performance analysis conducted to verify that the Auxiliary Building Gas Treatment System has the required accident mitigation capabilities has shown that the system flow rate is sized properly to handle all expected outside air inleakage at a 1/4 inch of water negative pressure differential. This indicates that the flow rate of 9000 cfm is sufficient to assure an adequate margin above the expected Auxiliary Building Secondary Containment Enclosure inleakage.

The performance analysis evaluated the capability of the Auxiliary Building Gas Treatment System to reach and maintain a negative pressure of 1/4 inch water gauge within the boundaries of the Auxiliary Building Secondary Containment Enclosure. Assumptions utilized in the analysis included:

1. Infiltration into the ABSCE is proportional to the square root of the pressure differential and equals ~~6,000~~ 7000 cfm at a negative differential pressure of 1/4 inch water gauge.

2. Only one air cleanup unit in the ABGTS operates at the rated capacity of 9,000 cfm.

3. The air cleanup unit fan begins to operate 30 seconds after initiation of the posutlated LOCA.

4. The initial static pressure inside the ABSCE is conservatively assumed to be atmospheric pressure, although the ABSCE is under a negative pressure during normal operation.

5. The effective pressure head due to wind equals 1/8 inch water gauge.

152

The periodic test program for the EGTS fans and air cleanup units is described in Chapter 16, Section 3/4.6. A periodic test will be performed once every 18 months to verify that the EGTS can maintain the annulus at a negative pressure within the instrument deadband immediately above and below the nominal value of minus 0.5 inch of water. This test will also verify that the Shield Building inleakage rate to the annulus is less than or equal to 500 ~~100~~ cfm (corrected to 0°F) at minus 9.5 inch of water. A verification of system flow capacity and Shield Building inleakage rates at the specified negative pressure is adequate to confirm that the calculated depressurization time is conservative. 28

6.2.3.4.2. Auxiliary Building Gas Treatment System

Preoperational testing of the Auxiliary Building Gas Treatment System will be conducted to verify the capabilities of the system to function during accidents. Included in the test scope will be functional tests on all system instrumentation, controls, and alarms. In particular, the tests will:

1. Verify the startup and control capabilities of the system, considering a single operating component failure.

2. Verify the capability of the air flow control modules to create and maintain a negative 1/4 inch water pressure within the Auxiliary Building Secondary Containment Enclosure.

3. Verify that ABSCE infiltration is less than or equal to the design value at the design negative pressure level.

4. Verify that the air cleanup units meet requirements specified in Regulatory Guide 1.5.2. Refer to Section 6.5.1.4.2 for further information related to tests applicable to the air cleanup units.

The periodic test program for the ABGTS fans and air cleanup units is described in the plant Technical Specifications. A periodic test will be performed to verify that the ABGTS can maintain the ABSCE at a negative pressure within the instrument deadband immediately above and below the nominal value of minus 1/4 inch of water. This test will also verify that the ABSCE inleakage rate is less than or equal to ~~6000~~ 7000 cfm while the ABSCE is being maintained at minus 1/4 inch of water as described above. A verification of system flow capacity and ABSCE inleakage rate at the specified negative pressure is adequate to confirm that the calculated depressurization time is conservative. 40 55 52 28

452

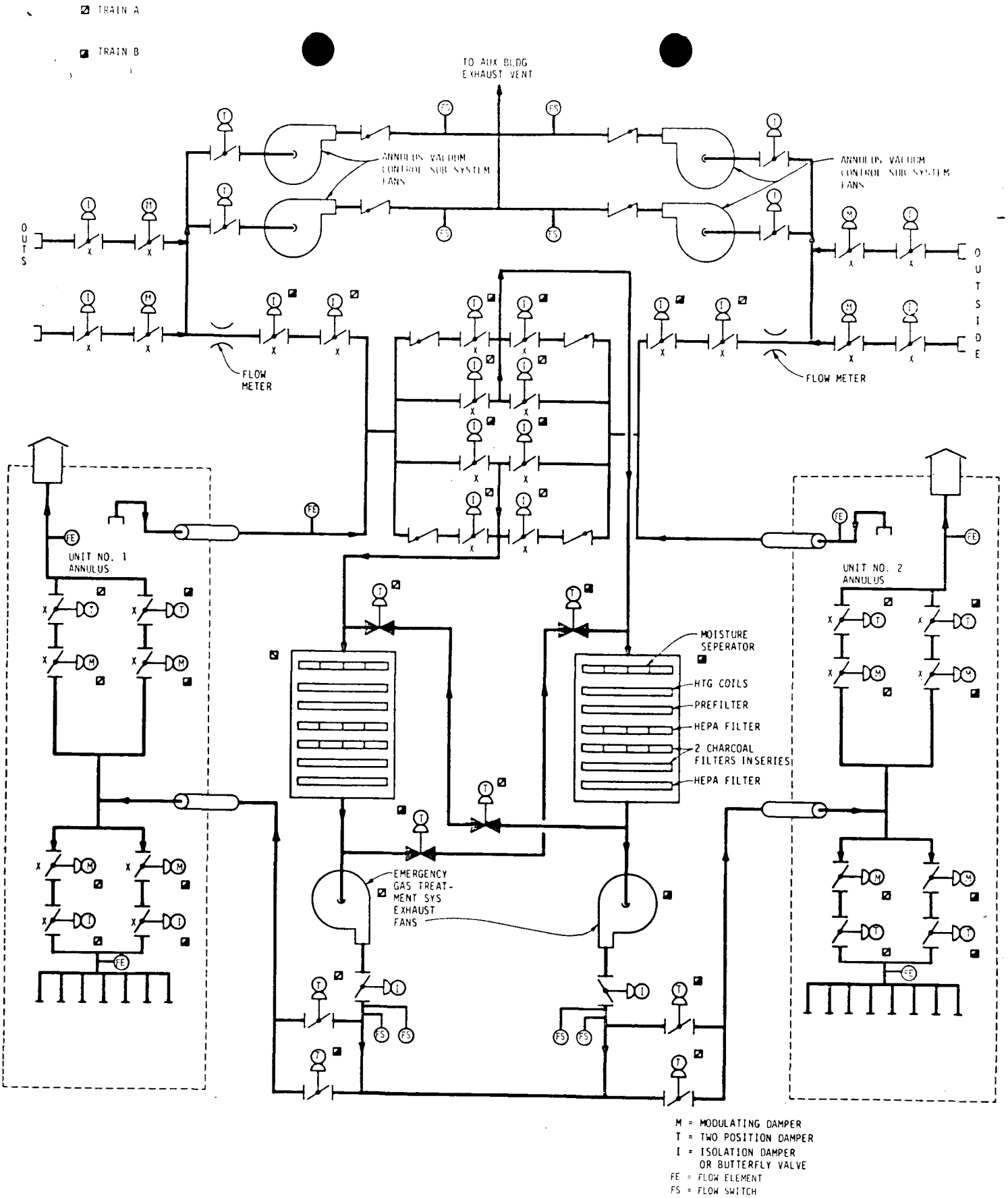

Revised by Amend. 56

WATTS BAR NUCLEAR PLANT
FINAL SAFETY ANALYSIS REPORT

EMERGENCY GAS TREATMENT SYSTEM
SCHEMATIC DIAGRAM
FIGURE 6.2.3-11

6.2.4 Containment Isolation Systems

The containment isolation systems provide the means of isolating fluid systems that pass through containment penetrations so as to confine to the containment any radioactivity that may be released in the containment following a design basis event. The Containment Isolation Systems are required to function following a design basis event to isolate nonsafety-related fluid systems penetrating the containment. The Watts Bar Nuclear Plant does not have a particular system for containment isolation, but isolation design is achieved by applying common criteria to penetrations in many different fluid systems and by using ESF signals to actuate appropriate valves.

6.2.4.1 Design Bases

The main function of the Containment Isolation System is to provide containment integrity when needed. Containment integrity is defined to exist when:

1. The nonautomatic containment isolation valves and blind flanges are closed as required.
2. The containment equipment hatch is properly closed.
3. At least one door in each containment personnel air lock is properly closed.
4. All automatic containment isolation valves are operable or are deactivated in the closed position or at least one valve in each line having an inoperable valve is closed.
5. All requirements of the Technical Specification with regard to containment leakage and test frequency are satisfied.

Containment integrity shall be required if there is fuel in the reactor which has been used for power operation, except when the reactor is in the cold shutdown condition with the reactor vessel head installed, or when the reactor is in the refueling shutdown condition with the reactor vessel head removed.

In general, the containment isolation system is designed to the requirements of General Design Criteria 54, 55, 56, and 57 of 10 CFR Part 50, Appendix A. The following are alternate containment isolation provisions for certain classes of lines.

1. Fluid instrument lines penetrating the containment are designed to meet the General Design Criteria except for the pressure sensor and reactor vessel level instrumentation system lines. ~~which are required to operate post accident.~~ delete 52
   Instrument lines which penetrate containment are listed in Table 6.2.4-4.

453

The Containment Isolation System complies with the intent of the NRC General Design Criteria 54, 55, 56, and 57.

Adequate protection is provided for piping, valves, and vessels against dynamic effects and missiles which might result from plant equipment failures, including a LOCA.

Isolation valves inside the containment are located between the crane wall and the inside containment wall. The crane wall serves as the main missile barrier. Other missile barriers are discussed in Section 3.5. 55

The requirements and intent of NRC General Design Criteria 54, 55, 56, and 57 Regulatory Guide 1.11 have been met with only four exceptions: 55

a. The pressure-sensing instruments that determine containment pressure are required for actuation of ESF Systems and for containment pressure monitoring. Any valve installed in the lines that sense containment pressure may jeopardize actuation of that equipment necessary to reduce or mitigate the consequences of a design basis event. The containment pressure sensors are located outside of and as close as practical to the containment. The lines and pressure sensors are missile protected and designed to SSE requirements. ~~Flow limiters are provided on the inboard side of the penetration to meet Regulatory Guide 1.11.~~ delete 52 55

b. The reactor vessel level indication system (RVLIS) is required post accident for continual indication of the water level in the reactor vessel. The capillary sensing lines which transmit pressure from the reactor vessel to instruments in the Auxiliary Building are armored and designed to withstand DBE conditions. Any containment isolation valves installed in the RVLIS capillary lines will jeopardize the performance of the system. For this reason, isolation of these capillary lines is accomplished by a sealed sensor located inside containment and an isolator located outside containment. These devices utilize a type of bellow which transmits pressure while preventing mixing of the fluids on either side of the isolation devices. The capillary line is armored 3/16 inches O.D. stainless steel tubing and is filled with demineralized water and sealed. A postulated shear of this capillary line on either side of the containment would not allow a leak to develop through the containment boundary. 52 55

c. Containment isolation for each RHR sump line penetration consists of:

1. a closed system outside containment

2. a containment isolation valve outside containment in each of the two lines after the penetrating line branches in the RHR sump valve room. Both of these valves are remotely controlled from the main control room.

453

the transient for a large break, and delivers approximately 1000 cu ft of water within the next 20 seconds. At this time the UHI low level signal closes the UHI isolation valves with 800 cu ft of water still remaining in the tank. The closure time for these valves is 4 seconds. This is done to prevent stratification of the injected water in the reactor upper head as well as the injection of pressurized nitrogen into the RCS. The valves are then gagged automatically to insure positive closure. The cold leg injection accumulators can also be isolated from the RCS by closure of their motor operated isolation valves. Since these accumulators operated at substantially lower pressures than the upper head, the injection of pressurized nitrogen via the cold legs is not considered a problem. However, these valves are closed during the switch over from cold to hot leg recirculation. 52 55

The design value for dissolved nitrogen in the water of the Upper Head Injection System is 5×10^{-5} lb N_2/lb water. Due to the possibility that the water - N_2 - interfaces varies with time to some minimal degree it is not feasible to calculate the buildup rate. For this reason the system was designed to totally minimize the absorption of N_2 gas in the water by eliminating any significant contact surface between the two fluids. The water and gas accumulators are isolated by means of a membrane in the 12" crossover line. The only water surface exposed to N_2 pressure is the cross sectional area of the UHI surge tank. In addition, this surge tank is connected to the water bearing accumulator by a very small line (i.e., 1-inch) and contains a small volume of water (i.e., 35 ft.^{3}). Therefore, insignificant buildup is expected to occur downstream of the surge tank. 55 52

Injection Mode After Loss of Primary Coolant

The injection mode of emergency core cooling is initiated by the safety injection signal ("SI" signal). This signal is actuated by any of the following: 55

1. Low pressurizer pressure
2. High containment pressure
3. High differential pressure between any two steam generators
4. High steam flow coincident with low T_{avg} or low steam pressure
5. Manual actuation

46

Operation of the Emergency Core Cooling System during the injection mode is completely automatic. Refer to Figure 7.~~2~~-~~1~~ (Sheet ~~3~~ 3-3) for complete safety injection logic and control diagrams. The safety injection signal in addition to activating the ESF equipment automatically initiates the following actions:

452

TABLE 6.2.4-1 (Continued)

WATTS BAR NUCLEAR PLANT PRIMARY CONTAINMENT AND SHIELD BUILDING PENETRATION ISOLATION SYSTEM DATA

SORTED BY: CONTAINMENT PENETRATION NUMBER

PENETRATION IDENTIF. PRIM CONT	SHIELD BLDG	PENETRATING EQUIPMENT NAME	PRIMARY CONTAINMENT PENETRATION ELEVATION (FT)	ELEVATION (IN)	AZIMUTH (DEG)	AZIMUTH (MIN)	SLEEVE DIA (IN)	PIPE DIA (IN)	SHIELD BUILDING PENETRATION ELEVATION (FT)	ELEVATION (IN)	AZIMUTH (DEG)	AZIMUTH (MIN)	SLEEVE DIA (IN)	PIPE DIA (IN)
X013C	MK065	MAIN STEAM	737	0.0	184	8	52.00	32.00	737	0.0	184	8	66.00	32.00
X013D	MK066	MAIN STEAM	737	0.0	355	52	52.00	32.00	737	0.0	355	52	66.00	32.00
X014A	AS014A	STEAM GENERATOR BLOW DOWN	739	6.00	9	30	16.00	2.00	739	6.00	9	30	16.00	2.00
X014B	AS014B	STEAM GENERATOR BLOW DOWN	739	6.00	350	30	16.00	2.00	739	6.00	350	30	16.00	2.00
X014C	AS014C	STEAM GENERATOR BLOW DOWN	734	5.00	9	30	16.00	2.00	734	5.00	9	30	16.00	2.00
X014D	AS014D	STEAM GENERATOR BLOW DOWN	734	5.00	350	30	16.00	2.00	734	5.00	350	30	16.00	2.00
X015	AS015	CHEM AND VOL SYS LETDN	733	0.0	301	0	18.00	2.00	733	0.0	301	0	18.00	2.00
X016	MK019	NORMAL CHARGE	730	6.00	299	30	6.00	3.00	730	6.00	299	30	6.00	3.00
X017	MK027	RHR HOT LEG INJECTION	732	0.0	281	30	28.00	12.00	732	0.0	281	30	28.00	12.00
X018	******	SPARE	740	0.0	145	0	2.00	*****	***	***	***	**	*****	*****
X019A	******	SUMP SUCT TO RHR PUMP	689	0.0	***	**	24.00	18.00	***	***	***	**	*****	*****
X019B	******	SUMP SUCT TO RHR PUMP	689	0.0	***	**	24.00	18.00	***	***	***	**	*****	*****
X020A	AS020A	LOW HD SIS	732	0.0	291	30	24.00	8.00	732	0.0	291	30	24.00	8.00
X020B	AS020B	LOW HD SIS	732	0.0	287	30	24.00	8.00	732	0.0	287	30	24.00	8.00
X021	AS021	SI TO HOT LEG	728	6.00	289	30	20.00	4.00	728	6.00	289	30	20.00	4.00
X022	AS022	BIT CHARGING PUMP DISCH	730	3.00	294	45	20.00	3.00	730	3.00	294	45	20.00	3.00
X023	MK061	PAS CONT AIR INTK ~~DC~~ TR-B	729	0.0	283	0	3.00	0.38	734	9.0	250	0	3.00	0.38
X024	AS024	SIS RELIEF VALVE DISCH	727	6.00	301	0	20.00	4.00	727	6.00	301	0	20.00	4.00
X025A	MK044M	PRESSURIZER LIQUID SAMPLE	723	6.00	294	0	6.00	0.38	723	6.00	294	0	8.00	0.38
X025B	******	dP SENSOR	723	6.00	294	0	6.00	0.50	***	****	***	**	*****	****
X025C	******	dP SENSOR	723	6.00	294	0	6.00	0.50	***	****	***	**	*****	****
X025D	MK044M	PRESSURIZER STEAM SAMPLE	723	6.00	294	0	6.00	0.38	723	6.00	294	0	8.00	0.38
X026A	MK045M	ILRT SENSOR LINE	723	6.00	293	0	6.00	1.00	***	****	***	**	*****	****
X026B	MK045M	ILRT SENSOR LINE	723	6.00	293	0	6.00	1.00	***	****	***	**	*****	****
X026C	******	dP SENSOR	723	6.00	293	0	6.00	0.50	***	****	***	**	*****	****
X027A	MK046M	STM GEN NO. 1 SAMPLE	723	6.00	292	0	6.00	0.38	723	6.00	292	0	8.00	0.38
X027B	MK046M	STM GEN NO. 2 SAMPLE	723	6.00	292	0	6.00	0.38	723	6.00	292	0	8.00	0.38
X027C	MK046M	STM GEN NO. 3 SAMPLE	723	6.00	292	0	6.00	0.38	723	6.00	292	0	8.00	0.38
X027D	MK046M	STM GEN NO. 4 SAMPLE RTRN	723	6.00	292	0	6.00	0.38	723	6.00	292	0	8.00	0.38
X028	MK034	PAS CONT SUMP ~~MTR~~ TR-XB	721	0.0	287	30	3.00	0.38	735	3.0	257	0	3.00	0.38
X029	MK050	CCS FROM RC PUMP COOLERS	720	0.0	288	30	6.00	6.00	720	0.0	288	30	10.00	6.00
X030	AS030	ACCUMMULATORS TO HOLDUP TK	720	6.00	291	30	16.00	0.75	720	6.00	291	30	16.00	0.75
X031	MK049	FIRE PROTECTION	722	0.0	289	30	6.00	4.00	722	0.0	289	30	10.00	4.00
X032	AS032	SI TO HOT LEGS	720	6.00	282	30	20.00	4.00	720	6.00	282	30	20.00	4.00
X033	AS033	SI TO LOW HEAD SI	720	6.00	277	30	20.00	4.00	720	6.00	277	30	20.00	4.00
X034	MK043	CONTROL AIR I AND C	720	6.00	299	30	8.00	2.00	720	6.00	299	30	8.00	2.00
X035	MK042	CCS FROM EXCESS LETDN HX	720	6.00	301	30	6.00	6.00	720	6.00	301	30	10.00	6.00
X036	MK020	SG CHEM CLEANING	742	6.00	280	0	24.00	24.00	742	6.00	280	0	24.00	****
X037	MK014	MAINTENANCE PORT	771	6.00	265	0	12.00	12.00	771	6.00	265	0	12.00	12.00
X038	MK013	SPARE	771	6.00	268	0	12.00	*****	771	6.00	268	0	12.00	*****

TABLE 6.2.4-1 (Continued)

WATTS BAR NUCLEAR PLANT PRIMARY CONTAINMENT AND SHIELD BUILDING PENETRATION ISOLATION SYSTEM DATA

SORTED BY: CONTAINMENT PENETRATION NUMBER

PENETRATION IDENTIF. PRIM CONT	SHIELD BLDG	PENETRATING EQUIPMENT NAME	PRIMARY CONTAINMENT PENETRATION ELEVATION (FT)	(IN)	AZIMUTH (DEG)	(MIN)	SLEEVE DIA (IN)	PIPE DIA (IN)	SHIELD BUILDING PENETRATION ELEVATION (FT)	(IN)	AZIMUTH (DEG)	(MIN)	SLEEVE DIA (IN)	PIPE DIA (IN)
X039A	MK055M	N2 TO ACCUMULATORS	720	6.00	280	0	10.00	1.00	720	6.00	280	0	10.00	1.00
X039B	MK055M	N2 TO PRESS RELIEF TANK	720	6.00	280	0	10.00	0.75	720	6.00	280	0	10.00	0.75
X039C	MK055M	SPARE	720	6.00	280	0	10.00	*****	720	6.00	280	0	10.00	*****
X039D	MK055M	SPARE	720	6.00	280	0	10.00	*****	720	6.00	280	0	10.00	*****
X040A	MK009	AUXILIARY FEEDWATER	750	3.00	301	30	6.00	4.00	750	3.00	301	30	10.00	4.00
X040B	MK011	AUXILIARY FEEDWATER	748	3.00	301	30	6.00	4.00	748	3.00	301	30	10.00	4.00
X040C	MK010	SPARE	750	3.00	299	30	6.00	*****	750	3.00	299	30	8.00	*****
X040D	MK012	H2 PURGE	748	3.00	299	30	6.00	3.00	748	3.00	299	30	8.00	3.00
X041	MK047	FLOOR SUMP PUMP DISCH	719	6.00	294	0	6.00	2.00	719	6.00	294	0	6.00	2.00
X042	MK039	PRESS REL TANK MAKE-UP	723	6.00	301	0	6.00	3.00	723	6.00	301	0	6.00	3.00
X043A	MK031	TO RC PUMP SEALS	727	0.00	292	30	6.00	2.00	727	0.00	292	0	6.00	2.00
X043B	MK029	TO RC PUMP SEALS	728	6.00	292	0	6.00	2.00	728	6.00	292	0	6.00	2.00
X043C	MK028	TO RC PUMP SEALS	728	6.00	293	30	6.00	2.00	728	6.00	293	30	6.00	2.00
X043D	MK030	TO RC PUMP SEALS	727	0.00	293	30	6.00	2.00	727	0.00	293	30	6.00	2.00
X044	MK037	FROM RC PUMP SEALS	727	6.00	281	30	8.00	4.00	727	6.00	281	30	12.00	4.00
X045	AS045	RC DRAIN TK AND PRT TO VH	723	0.00	281	30	16.00	1.00	723	0.0	281	30	16.00	1.00
X046	AS046	RC DRAIN TK PUMP DISCH	728	0.00	278	0	18.00	3.00	723	0.0	278	0	18.00	3.00
→ X047A	MK025	GLYCOL ~~N~~ SUPPLY	808	6.00	293	0	20.00	6.00	796	0.0	293	0	12.00	6.00
→ X047B	MK026	GLYCOL ~~DIS~~ RETURN	808	6.00	296	30	20.00	6.00	796	0.0	295	0	12.00	6.00
X048A	MK004	CONTAINMENT SPRAY	855	8.00	301	30	14.00	10.00	752	0.0	301	30	16.00	10.00
X048B	MK003	CONTAINMENT SPRAY	853	8.00	304	0	14.00	10.00	752	0.0	304	0	16.00	10.00
X049A	MK002	RHR SPRAY	855	8.00	306	0	12.00	8.00	752	0.0	306	0	12.00	8.00
X049B	MK001	RHR SPRAY	853	8.00	308	0	12.00	8.00	752	0.0	308	30	12.00	8.00
X050A	MK016	RCP THERM BARRIER RETURN	734	6.00	300	30	3.00	3.00	734	6.00	300	30	6.00	3.00
X050B	MK017	RCP THERM BARRIER SUPPLY	734	6.00	299	30	3.00	3.00	734	6.00	299	30	6.00	3.00
X051	MK0035	SPARE	728	6.00	286	30	6.00	*****	728	6.00	286	30	10.00	*****
X052	MK040	CCS TO RC PUMP COOLERS	722	6.00	299	30	6.00	6.00	722	6.00	299	30	10.00	6.00
X053	MK041	CCS TO EXCESS LETDN HX	721	6.00	301	0	6.00	6.00	721	6.00	301	0	10.00	6.00
X054	MK072	THIMBLE RENEWAL	740	0.0	90	0	8.00	8.00	740	0.0	90	0	8.00	8.00
X055	MK015	SPARE	771	6.00	262	0	12.00	*****	771	6.0	262	0	12.00	*****
X056A	MK080	LOWER CONT ERCW SUPPLY	720	0.0	353	0	6.00	6.00	708	0.0	348	0	10.00	8.00
X056B	MK127	SPARE	720	0.0	355	30	3.00	*****	720	0.0	355	30	6.00	*****
X057A	MK081	LOWER CONT ERCW RETURN	720	0.0	351	30	6.00	6.00	706	6.00	339	0	10.00	8.00
X057B	MK128	SPARE	720	0.0	354	15	3.00	*****	720	0.0	354	15	6.00	*****
X058A	MK079	LOWER CONT ERCW SUPPLY	720	0.0	7	0	6.00	6.00	706	6.00	349	30	10.00	8.00
X058B	MK126	SPARE	720	0.0	13	0	3.00	*****	720	0.0	13	0	6.00	*****
X059A	MK078	LOWER CONT ERCW RETURN	720	0.0	8	30	6.00	6.00	708	0.00	351	0	10.00	8.00
X059B	MK125	SPARE	720	0.0	14	30	3.00	*****	720	0.0	14	30	6.00	*****
X060A	MK077	LOWER CONT ERCW SUPPLY	720	0.0	173	0	6.00	6.00	706	6.00	11	0	10.00	8.00
X060B	MK132	SPARE	720	0.0	174	15	3.00	*****	720	0.0	174	15	6.00	*****

TABLE 6.2.4-1 (Continued)

WATTS BAR NUCLEAR PLANT PRIMARY CONTAINMENT AND SHIELD BUILDING PENETRATION ISOLATION SYSTEM DATA

SORTED BY: CONTAINMENT PENETRATION NUMBER

PENETRATION IDENTIF. PRIM CONT	SHIELD BLDG	PENETRATING EQUIPMENT NAME	PRIMARY CONTAINMENT PENETRATION ELEVATION (FT)	(IN)	AZIMUTH (DEG)	(MIN)	SLEEVE DIA (IN)	PIPE DIA (IN)	SHIELD BUILDING PENETRATION ELEVATION (FT)	(IN)	AZIMUTH (DEG)	(MIN)	SLEEVE DIA (IN)	PIPE DIA (IN)
X061A	MK076	LOWER CONT ERCW RETURN	720	0.0	171	30	6.00	6.00	706	6.00	9	0	10.00	8.00
X061B	MK131	SPARE	720	0.0	175	30	3.00	*****	720	0.0	175	30	6.00	*****
X062A	MK074	LOWER CONT ERCW SUPPLY	720	0.0	187	0	6.00	6.00	706	6.00	7	0	10.00	8.00
X062B	MK130	SPARE	720	0.0	193	0	3.00	*****	720	0.0	195	0	6.00	*****
X063A	MK075	LOWER CONT ERCW RETURN	720	0.0	189	30	6.00	6.00	706	6.00	5	0	10.00	8.00
X063B	MK129	SPARE	720	0.0	194	30	3.00	*****	720	0.0	194	30	6.00	*****
X064	MK092	INST ROOM CHILLED H20 RET	737	0.0	65	0	6.00	2.00	708	0.0	357	0	6.00	2.00
X065	MK090	INST ROOM CHILLED H20 SUP	738	0.0	65	0	6.00	2.00	706	6.00	352	30	6.00	2.00
X066	MK093	INST ROOM CHILLED H20 RET	737	0.0	104	0	6.00	2.00	706	0.0	355	30	6.00	2.00
X067	MK091	INST ROOM CHILLED H20 SUP	738	0.0	104	0	6.00	2.00	708	0.0	354	0	6.00	2.00
X068	MK088	UPPER CONT ERCW SUPPLY	794	6.00	301	15	2.00	2.00	730	0.0	319	0	4.00	2.00
X069	MK086	UPPER CONT ERCW SUPPLY	796	6.00	301	15	2.00	2.00	730	0.0	321	0	4.00	2.00
X070	MK084	UPPER CONT ERCW RETURN	798	6.00	301	15	2.00	2.00	730	0.0	323	0	4.00	2.00
X071	MK082	UPPER CONT ERCW RETURN	800	6.00	301	15	2.00	2.00	730	0.0	325	0	4.00	2.00
X072	MK089	UPPER CONT ERCW RETURN	793	6.00	301	15	2.00	2.00	731	0.0	318	0	4.00	2.00
X073	MK087	UPPER CONT ERCW RETURN	795	6.00	301	15	2.00	2.00	731	0.0	320	0	4.00	2.00
X074	MK085	UPPER CONT ERCW SUPPLY	797	6.00	301	15	2.00	2.00	731	0.0	322	0	4.00	2.00
X075	MK083	UPPER CONT ERCW SUPPLY	799	6.00	301	15	2.00	2.00	731	0.0	324	0	4.00	2.00
X076	MK097	SERVICE AIR	711	0.0	300	0	2.00	2.00	708	9.00	300	0	6.00	2.00
X077	MK096	DEMINERALIZED WATER	710	6.00	299	0	6.00	2.00	708	9.00	299	0	6.00	2.00
X078	MK098	FIRE PROTECTION	798	9.00	301	0	6.00	4.00	708	9.00	301	0	6.00	4.00
X079A	MK023	ICE BLOWING	808	0.0	289	0	10.00	4.00	808	0.00	289	0	10.00	4.00
X079B	MK024	NEGATIVE RETURN	809	0.0	290	0	12.00	6.00	798	0.0	291	0	10.00	6.00
X080	MK071	LOWER COMP PRESS RELIEF	720	0.0	286	30	8.00	8.00	720	0.0	286	30	8.00	54.16
X081	AS081	RC DR TK TO GAS ANALYZER	718	0.0	287	0	12.00	0.75	718	0.0	287	0	12.00	0.75
X082	MK094	REFUEL CAV PRFCN PUMP SUCT	718	0.0	282	30	10.00	6.00	718	0.0	282	30	10.00	6.00
X083	MK095	REFUEL CAV PRFCN PUMP SUCT	733	0.0	294	0	8.00	4.00	733	0.0	294	0	8.00	4.00
X084A	MK099M	P.R.T. TO GAS ANALYZER	723	0.0	307	30	6.00	0.38	723	0.0	307	30	6.00	0.38
X084B	MK101	RVLIS	723	0.0	307	30	6.00	0.25	721	6.0	307	30	6.00	0.19
X084C	MK101	RVLIS	723	0.0	307	30	6.00	0.25	721	6.0	307	30	6.00	0.19
X084D	MK101	RVLIS	723	0.0	307	30	6.00	0.25	721	6.0	307	30	6.00	0.19
X085A	MK100M	EX LT DM HX TO BORON ANAL	723	0.0	306	0	6.00	0.38	723	0.0	306	0	6.00	0.38
X085B	MK100M	HOT LEG SAMPLE LOOPS 1 & 3	723	0.0	306	0	6.00	0.38	723	0.0	306	0	6.00	0.38
X085C	******	dP SENSOR	723	0.0	306	0	6.00	0.50	***	****	***	**	*****	****
X085D	MK100M	SPARE	723	0.0	306	0	6.00	****	723	0.0	306	0	6.00	****
X086A	MK061	PAS CONT AIR R INTK ~~DX~~ TR-A	721	6.00	307	30	6.00	0.38	721	6.00	307	30	3.00	0.38
X086B	MK033	PAS CONT AIR ~~X~~TRN TR-A	721	6.00	307	30	6.00	0.38	733	6.00	253	30	3.00	0.38
X086C	MK054	PAS CONT SUMP RTRN TR-A	721	6.00	307	30	6.00	0.38	721	6.00	307	30	4.00	0.38
X086D	MK101M	SPARE	721	6.00	306	0	6.00	****	721	6.00	307	30	6.00	****
X087A	~~MK~~ 102	~~PAS CONT SUMP INTK TR-B~~ SPARE	721	6.00	306	0	6.00	~~0.38~~ ~~****~~	733	9.00	258	0	3.00	~~0.38~~ ~~****~~

TABLE 6.2.4-1 (Continued)

WATTS BAR NUCLEAR PLANT PRIMARY CONTAINMENT AND SHIELD BUILDING PENETRATION ISOLATION SYSTEM DATA

SORTED BY: CONTAINMENT PENETRATION NUMBER

PENETRATION IDENTIF. PRIM CONT	SHIELD BLDG	PENETRATING EQUIPMENT NAME	PRIMARY CONTAINMENT PENETRATION ELEVATION (FT)	(IN)	AZIMUTH (DEG)	(MIN)	SLEEVE DIA (IN)	PIPE DIA (IN)	SHIELD BUILDING PENETRATION ELEVATION (FT)	(IN)	AZIMUTH (DEG)	(MIN)	SLEEVE DIA (IN)	PIPE DIA (IN)
X087B	MK102	RVLIS	721	6.00	306	0	6.00	0.25	721	6.00	306	0	6.00	0.19
X087C	MK102	RVLIS	721	6.00	306	0	6.00	0.25	721	6.00	306	0	6.00	0.19
X087D	MK102	RVLIS	721	6.00	306	0	6.00	0.25	721	6.00	306	0	6.00	0.19
X088	MK103	SPARE	733	0.0	277	30	8.00	****	733	0.0	277	30	8.00	****
X089	MK104	SPARE	732	0.0	278	30	8.00	****	732	0.0	278	30	8.00	****
X090	MK105	CONTROL AIR TR-B	729	6.00	280	30	4.00	2.00	729	6.00	280	30	4.00	2.00
X091	MK056	CONTROL AIR TR-A	723	6.00	291	0	4.00	2.00	723	6.00	291	0	6.00	2.00
X092A	*****	HYDROGEN ANALYZER TR-B	723	6.00	290	0	6.00	0.38	***	****	***	**	*****	****
X092B	*****	HYDROGEN ANALYZER TR-B	723	6.00	290	0	6.00	0.38	***	****	***	**	*****	****
X092C	MK034	PAS HOT LEG 1 TR-A	723	6.00	290	0	6.00	0.38	735	3.00	257	0	3.00	0.38
X092D	*****	SPARE	723	6.00	290	0	6.00	****	***	****	***	**	*****	****
X093	MK058	ACCUM SAMPLE	723	6.00	289	0	3.00	0.38	723	6.00	289	0	3.00	0.38
X094A	MK059M	UPPER COMP AIR MON INTAKE	741	0.0	294	0	6.00	1.50	741	0.0	294	0	6.00	1.50
X094B	MK059M	UPPER COMP AIR MON INTAKE	741	0.0	294	0	6.00	1.50	741	0.0	294	0	6.00	1.50
X094C	MK059M	UPPER COMP AIR MON RETURN	741	0.0	294	0	6.00	1.50	741	0.0	294	0	6.00	1.50
X095A	MK060M	LOWER COMP AIR MON INTAKE	741	0.0	293	0	6.00	1.50	741	0.0	293	0	6.00	1.50
X095B	MK060M	LOWER COMP AIR MON INTAKE	741	0.0	293	0	6.00	1.50	741	0.0	293	0	6.00	1.50
X095C	MK060M	LOWER COMP AIR MON RETURN	741	0.0	293	0	6.00	1.50	741	0.0	293	0	6.00	1.50
X096A	******	dP SENSOR	741	0.0	292	0	6.00	0.50	***	***	***	**	*****	****
X096B	MK106M	ILRT SENSOR LINE	741	0.0	292	0	6.00	****	***	***	***	**	*****	****
X096C	MK106M	ILRT SENSOR LINE	741	0.0	292	0	6.00	****	***	***	***	**	*****	****
X097	******	dP SENSOR	741	0.0	291	0	3.00	0.50	***	***	***	**	*****	****
X098	MK108	SPARE	741	0.0	290	0	3.00	****	741	0.0	290	0	3.00	****
X099	*****	HYDROGEN ANALYER TR-A	740	0.0	236	0	3.00	0.38	***	***	***	**	*****	****
X100	*****	HYDROGEN ANALYZER TR-A	740	0.0	237	0	3.00	0.38	***	***	***	**	*****	****
X101	MK054	~~PAS CONT SUMP RTRN TR-B~~ SPARE	723	6.00	288	0	3.00	~~****~~	707	0.0	067	0	4.00	~~****~~ ****
X102	*****	SPARE	728	0.0	236	0	3.00	****	***	***	***	**	*****	****
X103	*****	SPARE	723	6.00	287	0	0.75	****	***	***	***	**	*****	****
X104	*****	SPARE	728	0.0	237	0	0.75	****	***	***	***	**	*****	****
X105	MK033	PAS CONT AIR RTRN TR-B	722	6.00	288	0	2.00	0.38	734	3.0	257	0	3.00	0.38
X106	MK048	PAS HOT LEG 3 TR-B	727	0.0	236	0	2.00	0.38	733	9.00	258	0	3.00	0.38
X107	MK038	RHR SUPPLY TO PUMPS	717	11.50	300	30	30.00	14.00	717	11.50	300	30	30.00	14.00
X108	AS108	UPPER HEAD INJECTION	711	6.00	218	0	24.00	12.00	711	6.00	218	0	18.00	12.00
X109	AS109	UPPER HEAD INJECTION	711	6.00	222	0	24.00	12.00	711	6.00	222	0	18.00	12.00
X110	MK032	UHI VALVE TEST LINE	711	6.0	209	0	6.00	2.00	711	6.00	216	0	6.00	2.00
X111	*****	SPARE	845	9.00	90	0	8.00	*****	***	***	***	**	*****	****
X112	*****	SPARE	845	9.00	270	0	8.00	*****	***	***	***	**	*****	****
X113	*****	SPARE	740	0.00	216	0	2.00	*****	***	***	***	**	*****	****
X114	MK110	GLYCOL FLOOR COOLING (FROM)	775	0.0	300	0	20.00	2.00	775	0.0	300	0	6.00	2.00
X115	MK111	GLYCOL FLOOR COOLING (TO)	771	6.00	300	0	20.00	2.00	771	6.00	300	0	6.00	2.00

TABLE 6.2.4-1 (Continued)

PENETRATION IDENTIF. PRIM. CONT.	SHIELD BLDG.	PENETRATING EQUIPMENT NAME	POSSIBLE LEAK PATHS	10CFR50 CRITERIA CONFORMANCE		LINE STATUS DURING OPERATIONAL PHASE NORMAL	SHUTDN	ACCID.	ISOLATION VALVE IN PRIMARY CONTAINMENT VALVE TYPE	VALVE OPER.	PRIMARY MODE OF ACTUATION	ACTUATING SIGNAL	OPER TIME (SEC)	SECONDARY MODE OF ACTUATION
X023	MK061	PAS CONT AIR INTR LC TR-B	AB D	54	56	CLOSED	CLOSED	VARIES	GLOBE	SOLND	REM.MAN.	********	5.00	LCL.MAN.
X024	AS024	SIS RELIEF VALVE DISCH	B D	54	56	CLOSED	CLOSED	CLOSED	CHECK	***	SELF ACT	********	****	*******
X025A	MK044M	PRESSURIZER LIQUID SAMPLE	A D	54	56	VARIES	VARIES	CLOSED	GLOBE	AIR	AUTOTRIP	PHASE A	5.00	REM.MAN.
X025B	******	dP SENSOR	B	54	***	OPEN	OPEN	OPEN	*****	***	********	********	****	*******
X025C	******	dP SENSOR	B	54	***	OPEN	OPEN	OPEN	*****	***	********	********	****	*******
X025D	MK044M	PRESSURIZER STEAM SAMPLE	A D	54	56	VARIES	VARIES	CLOSED	GLOBE	AIR	AUTOTRIP	PHASE A	5.00	REM.MAN.
X026A	MK045M	ILRT SENSOR LINE	B	54	56	CLOSED	VARIES	CLOSED	GLOBE	MAN.	LCL.MAN.	********	****	*******
X026B	MK045M	ILRT SENSOR LINE	B	54	56	CLOSED	VARIES	CLOSED	GLOBE	MAN.	LCL.MAN.	********	****	*******
X026C	******	dP SENSOR	B	54	***	OPEN	OPEN	OPEN	*****	***	********	********	****	*******
X027A	MK046M	STM GEN #1 SAMPLE	AB D	54	56	VARIES	VARIES	CLOSED	GLOBE	AIR	AUTOTRIP	PHASE A	10.00	REM.MAN.
X027B	MK046M	STM GEN #2 SAMPLE	AB D	54	56	VARIES	VARIES	CLOSED	GLOBE	AIR	AUTOTRIP	PHASE A	10.00	REM.MAN.
X027C	MK046M	STM GEN #3 SAMPLE RTRN	AB D	54	56	VARIES	VARIES	CLOSED	GLOBE	AIR	AUTOTRIP	PHASE A	10.00	REM.MAN.
X027D	MK046M	STM GEN #4 SAMPLE	AB D	54	56	VARIES	VARIES	CLOSED	GLOBE	AIR	AUTOTRIP	PHASE A	10.00	REM.MAN.
X028	MK034	PAS CONT SUMP ~~LINE~~ TR-X B	AB D	54	56	CLOSED	CLOSED	VARIES	~~GLOBE~~ CHECK	~~SOLND~~ *****	~~REM.MAN.~~ SELF ACT.	********	~~4.00~~ *****	~~LCL.MAN.~~ *****
X029	MK050	CCS FROM RC PUMP COOLERS	A D	54	56	OPEN	OPEN	CLOSED	BTFLY	MOTOR	AUTOTRIP	PHASE B	60.00	REM.MAN.
X030	AS030	ACCUMULATORS TO HOLDUP TK	B D	54	56	VARIES	VARIES	CLOSED	GLOBE	AIR	AUTOTRIP	PHASE A	10.00	REM.MAN.
X031	MK049	FIRE PROTECTION	AB D	54	56	OPEN	OPEN	CLOSED	CHECK	***	SELF ACT	********	****	*******
X032	AS032	SI TO HOT LEGS	B D	54	55	CLOSED	CLOSED	VARIES	CHECK	***	SELF ACT	********	****	*******
X033	AS033	SI TO HOT LEGS	B D	54	55	CLOSED	CLOSED	VARIES	CHECK	***	SELF ACT	********	****	*******
X034	MK043	CONTROL AIR I AND C	AB D	54	56	OPEN	OPEN	CLOSED	CHECK	***	SELF ACT	********	****	*******
X035	MK042	CCS FROM EXCESS LETDN HX	A D	54	56	VARIES	CLOSED	CLOSED	*****	***	********	********	****	*******
X036	MK020	SG CHEMICAL CLEANING	AB	***	***	CLOSED	VARIES	CLOSED	*****	***	********	********	****	*******
X037	MK014	MAINTENANCE PORT	AB	***	***	CLOSED	VARIES	CLOSED	*****	***	********	********	****	*******
X038	MK013	SPARE	*****	***	***	*******	******	******	*****	***	********	********	****	*******
X039A	MK055M	N2 TO ACCUMULATORS	A D	54	56	OPEN	OPEN	CLOSED	CHECK	***	SELF ACT	********	****	*******
X039B	MK055M	N2 TO PRESS. RELIEF TANK	A D	54	56	OPEN	OPEN	CLOSED	CHECK	***	SELF ACT	********	****	*******
X039C	MK055M	SPARE	*****	***	***	******	******	******	*****	***	********	********	****	*******
X039D	MK055M	SPARE	*****	***	***	******	******	******	*****	***	********	********	****	*******
X040A	MK009	AUXILIARY FEEDWATER	BC E	54	57	CLOSED	CLOSED	VARIES	*****	***	********	********	****	*******
X040B	MK011	AUXILIARY FEEDWATER	BC E	54	57	CLOSED	CLOSED	VARIES	*****	***	********	********	****	*******
X040C	MK010	SPARE	*****	***	***	******	******	******	*****	***	********	********	****	*******
X040D	MK012	H2 PURGE	A D	***	***	CLOSED	CLOSED	VARIES	*****	***	********	********	****	*******
X041	MK047	FLOOR SUMP PUMP DISCH	A D	54	56	OPEN	OPEN	CLOSED	BALL	AIR	AUTOTRIP	PHASE A	10.00	REM.MAN.
X042	MK039	PRESS REL TANK MAKEUP	AB D	54	56	VARIES	CLOSED	CLOSED	CHECK	***	SELF ACT	********	****	*******
X043A	MK031	TO RC PUMP SEALS	A D	54	56	OPEN	CLOSED	CLOSED	CHECK	***	SELF ACT	********	****	*******
X043B	MK029	TO RC PUMP SEALS	A D	54	56	OPEN	CLOSED	CLOSED	CHECK	***	SELF ACT	********	****	*******
X043C	MK028	TO RC PUMP SEALS	A D	54	56	OPEN	CLOSED	CLOSED	CHECK	***	SELF ACT	********	****	*******
X043D	MK030	TO RC PUMP SEALS	A D	54	56	OPEN	CLOSED	CLOSED	CHECK	***	SELF ACT	********	****	*******
X044	MK037	FROM RC PUMP SEALS	A D	54	56	OPEN	VARIES	CLOSED	GATE	MOTOR	AUTOTRIP	PHASE A	10.00	REM.MAN.
X045	AS045	RC DRAIN TK AND PRT TO VH	B D	54	56	OPEN	OPEN	CLOSED	DIAPH	AIR	AUTOTRIP	PHASE A	10.00	REM.MAN.

TABLE 6.2.4-1 (Continued)

PENETRATION IDENTIF. PRIM. CONT.	SHIELD BLDG.	PENETRATING EQUIPMENT NAME	POSSIBLE LEAK PATHS	10CFR50 CRITERIA CONFORMANCE		LINE STATUS DURING OPERATIONAL PHASE NORMAL	SHUTDN	ACCID.	ISOLATION VALVE IN PRIMARY CONTAINMENT VALVE TYPE	VALVE OPER.	PRIMARY MODE OF ACTUATION	ACTUATING SIGNAL	OPER TIME (SEC)	SECONDARY MODE OF ACTUATION
X046	AS046	RC DRAIN TK PUMP DISCHARGE	B D	54	56	OPEN	OPEN	CLOSED	DIAPH	AIR	AUTOTRIP	PHASE A	10.00	REM.MAN.
X047A	MK025	GLYCOL ~~SX~~ SUPPLY	B D	54	56	OPEN	OPEN	CLOSED	DIAPH	AIR	AUTOTRIP	PHASE A	30.00	REM.MAN.
X047B	MK026	GLYCOL ~~OSC~~ RETURN	B D	54	56	OPEN	OPEN	CLOSED	DIAPH	AIR	AUTOTRIP	PHASE A	30.00	REM.MAN.
X048A	MK004	CONTAINMENT SPRAY	A D	54	56	CLOSED	CLOSED	VARIES	CHECK	***	SELF ACT	********	****	*******
X048B	MK003	CONTAINMENT SPRAY	A D	54	56	CLOSED	CLOSED	VARIES	CHECK	***	SELF ACT	********	****	*******
X049A	MK002	RHR SPRAY	A D	54	56	CLOSED	CLOSED	VARIES	CHECK	***	SELF ACT	********	****	*******
X049B	MK001	RHR SPRAY	A D	54	56	CLOSED	CLOSED	VARIES	CHECK	***	SELF ACT	********	****	*******
X050A	MK016	RCP THERM BARRIER RETURN	A D	54	56	OPEN	OPEN	CLOSED	GATE	MOTOR	AUTOTRIP	PHASE B	60.00	REM.MAN.
X050B	MK017	RCP THERM BARRIER SUPPLY	A D	54	56	OPEN	OPEN	CLOSED	CHECK	***	SELF ACT	********	****	*******
X051	MK035	SPARE	*****	***	***	*****	******	******	*****	***	********	********	****	*******
X052	MK040	CCS TO RC PUMP COOLERS	A D	54	56	OPEN	OPEN	CLOSED	CHECK	***	SELF ACT	********	****	*******
X053	MK041	CCS TO EXCESS LETDN HX	A D	54	57	VARIES	CLOSED	CLOSED	*****	***	********	********	****	*******
X054	MK072	THIMBLE RENEWAL	BC	***	***	CLOSED	VARIES	CLOSED	*****	***	********	********	****	*******
X055	MK015	SPARE	*****	***	***	*****	******	******	*****	***	********	********	****	*******
X056A	MK080	LOWER CONT ERCW SUPPLY	AB DE	54	56	OPEN	OPEN	CLOSED	CHECK	***	SELF ACT	********	****	*******
X056B	MK127	SPARE	*****	***	***	*****	******	******	*****	***	********	********	****	*******
X057A	MK081	LOWER CONT ERCW RETURN	AB DE	54	56	OPEN	OPEN	CLOSED	BTFLY	MOTOR	AUTOTRIP	PHASE B	60.00	REM.MAN.
X057B	MK128	SPARE	*****	***	***	*****	******	******	*****	***	********	********	****	*******
X058A	MK079	LOWER CONT ERCW SUPPLY	AB DE	54	56	OPEN	OPEN	CLOSED	CHECK	***	SELF ACT	PHASE B	60.00	REM.MAN.
X058B	MK126	SPARE	*****	***	***	*****	******	******	*****	***	********	********	****	*******
X059A	MK078	LOWER CONT ERCW RETURN	AB DE	54	56	OPEN	OPEN	CLOSED	BTFLY	MOTOR	AUTOTRIP	PHASE B	60.00	REM.MAN.
X059B	MK125	SPARE	*****	***	***	*****	******	******	*****	***	********	********	****	*******
X060A	MK077	LOWER CONT ERCW SUPPLY	AB DE	54	56	OPEN	OPEN	CLOSED	CHECK	*****	SELF ACT	********	****	*******
X060B	MK132	SPARE	*****	***	***	*****	******	******	*****	***	********	********	****	*******
X061A	MK076	LOWER CONT ERCW RETURN	AB DE	54	56	OPEN	OPEN	CLOSED	BTFLY	MOTOR	AUTOTRIP	PHASE B	60.00	REM.MAN.
X061B	MK131	SPARE	*****	***	***	*****	******	******	*****	***	********	********	****	*******
X062A	MK074	LOWER CONT ERCW SUPPLY	AB DE	54	56	OPEN	OPEN	CLOSED	CHECK	***	SELF ACT	********	****	*******
X062B	MK130	SPARE	*****	***	***	*****	******	******	*****	***	********	********	****	*******
X063A	MK075	LOWER CONT ERCW RETURN	AB DE	54	56	OPEN	OPEN	CLOSED	BTFLY	MOTOR	AUTOTRIP	PHASE B	60.00	REM.MAN.
X063B	MK129	SPARE	*****	***	***	*****	******	******	*****	***	********	********	****	*******
X064	MK092	INST ROOM CHILLED H_2O RET	AB D	54	56	OPEN	OPEN	CLOSED	PLUG	AIR	AUTOTRIP	PHASE A	10.00	REM.MAN.
X065	MK090	INST ROOM CHILLED H_2O SUP	AB D	54	56	OPEN	OPEN	CLOSED	PLUG	AIR	AUTOTRIP	PHASE A	10.00	REM.MAN.
X066	MK093	INST ROOM CHILLED H_2O RET	AB D	54	56	OPEN	OPEN	CLOSED	PLUG	AIR	AUTOTRIP	PHASE A	10.00	REM.MAN.
X067	MK094	INST ROOM CHILLED H_2O SUP	AB D	54	56	OPEN	OPEN	CLOSED	PLUG	AIR	AUTOTRIP	PHASE A	10.00	REM.MAN.
X068	MK088	UPPER CONT ERCW SUPPLY	AB DE	54	56	OPEN	OPEN	CLOSED	CHECK	***	SELF ACT	********	****	*******
X069	MK086	UPPER CONT ERCW SUPPLY	AB DE	54	56	OPEN	OPEN	CLOSED	CHECK	***	SELF ACT	********	****	*******
X070	MK084	UPPER CONT ERCW RETURN	AB DE	54	56	OPEN	OPEN	CLOSED	PLUG	MOTOR	AUTOTRIP	PHASE B	60.00	REM.MAN.
X071	MK082	UPPER CONT ERCW RETURN	AB DE	54	56	OPEN	OPEN	CLOSED	PLUG	MOTOR	AUTOTRIP	PHASE B	60.00	REM.MAN.
X072	MK089	UPPER CONT ERCW RETURN	AB DE	54	56	OPEN	OPEN	CLOSED	PLUG	MOTOR	AUTOTRIP	PHASE B	60.00	REM.MAN.
X073	MK087	UPPER CONT ERCW RETURN	AB DE	54	56	OPEN	OPEN	CLOSED	PLUG	MOTOR	AUTOTRIP	PHASE B	60.00	REM.MAN.

TABLE 6.2.4-1 (Continued)

PENETRATION IDENTIF. PRIM. CONT.	SHIELD BLDG.	PENETRATING EQUIPMENT NAME	POSSIBLE LEAK PATHS	10CFR50 CRITERIA CONFORMANCE		LINE STATUS DURING OPERATIONAL PHASE NORMAL	SHUTDN	ACCID.	ISOLATION VALVE IN PRIMARY CONTAINMENT VALVE TYPE	VALVE OPER.	PRIMARY MODE OF ACTUATION	ACTUATING SIGNAL	OPER TIME (SEC)	SECONDARY MODE OF ACTUATION
X074	MK085	UPPER CONT ERCW SUPPLY	AB DE	54	56	OPEN	OPEN	CLOSED	CHECK	***	SELF ACT	********	****	*******
X075	MK083	UPPER CONT ERCW SUPPLY	AB DE	54	56	OPEN	OPEN	CLOSED	CHECK	***	SELF ACT	********	****	*******
X076	MK097	SERVICE AIR	A D	54	56	CLOSED	OPEN	CLOSED	DIAPH	MAN.	LCL.MAN.	********	****	*******
X077	MK096	DEMINERALIZED WATER	A D	54	56	CLOSED	OPEN	CLOSED	DIAPH	MAN.	LCL.MAN.	********	****	*******
X078	MK098	FIRE PROTECTION	AB D	54	56	OPEN	OPEN	CLOSED	CHECK	****	SELF ACT	********	****	*******
X079A	MK023	ICE BLOWING	AB	54	56	CLOSED	VARIES	CLOSED	BLDFL	MAN.	LCL.MAN.	********	****	*******
X079B	MK024	NEGATIVE RETURN	AB	54	56	CLOSED	VARIES	CLOSED	BLDFL	MAN.	LCL.MAN.	********	****	*******
X080	MK071	LOWER COMP PRESS RELIEF	AB CE	54	56	VARIES	CLOSED	CLOSED	BTFLY	AIR	AUTOTRIP	CONTVENT	4.00	REM.MAN.
X081	AS081	RC DR. TK. TO GAS ANALYZER	A D	54	56	VARIES	OPEN	CLOSED	DIAPH	AIR	AUTOTRIP	PHASE A	10.00	REM.MAN.
X082	MK094	REFUEL CAV PRFCN PUMP SUCT	AB D	54	56	CLOSED	VARIES	CLOSED	DIAPH	MAN.	LCL.MAN.	********	****	*******
X083	MK095	REFUEL CAV PRFCN PUMP DISCH	AB D	54	56	CLOSED	VARIES	CLOSED	DIAPH	MAN.	LCL.MAN.	********	****	*******
X084A	MK099M	P.R.T. TO GAS ANALYZER	A D	54	56	VARIES	OPEN	CLOSED	GLOBE	AIR	AUTOTRIP	PHASE A	10.00	REM.MAN.
X084B	MK101	RVLIS	B D	54	***	OPEN	OPEN	OPEN	*****	***	********	********	****	*******
X084C	MK101	RVLIS	B D	54	***	OPEN	OPEN	OPEN	*****	***	********	********	****	*******
X084D	MK101	RVLIS	B D	54	***	OPEN	OPEN	OPEN	*****	***	********	********	****	*******
X085A	MK100M	EX.LT.DH.HX TO BORON ANAL	AB D	54	56	VARIES	CLOSED	CLOSED	GLOBE	AIR	AUTOTRIP	PHASE A	5.00	REM.MAN.
X085B	MK100M	HOT LEG SAMPLE - LOOPS 1&3	AB D	54	55	VARIES	CLOSED	CLOSED	GLOBE	AIR	AUTOTRIP	PHASE A	10.00	REM.MAN.
X085C	******	dP SENSOR	B	54	***	OPEN	OPEN	OPEN	*****	***	********	********	****	*******
X085D	MK100M	SPARE	****	***	***	******	******	******	*****	***	********	********	****	*******
X086A	MK061	PAS CONT AIR INTK UC TR-A	AB D	54	56	CLOSED	CLOSED	VARIES	GLOBE	SOLND	REM.MAN.	********	5.00	LCL.MAN.
X086B	MK033	PAS CONT AIR RTRN TR-A	AB D	54	56	CLOSED	CLOSED	VARIES	CHECK	***	SELF ACT	********	****	*******
X086C	MK054	PAS CONT SUMP RTRN TR-A	AB D	54	56	CLOSED	CLOSED	VARIES	CHECK	***	SELF ACT	********	****	*******
X086D	MK101M	SPARE	****	***	***	******	******	******	*****	***	********	********	****	*******
→ X087A	MK~~048~~102	~~PAS CONT SUMP INTK TR-B~~ SPARE	~~***~~	~~**~~	~~**~~	~~*****~~	~~****~~	~~*****~~	~~*****~~	~~***~~	~~*****~~	~~*****~~	~~****~~	~~*****~~
X087B	MK102	RVLIS	~~AB D~~	~~54~~	~~56~~	~~CLOSED~~	~~CLOSED~~	~~VARIES~~	~~GLOBE~~	~~SOLND~~	~~REM.MAN.~~	~~******~~	~~5.00~~	~~LCL.MAN.~~
X087C	MK102	RVLIS	B D	54	***	OPEN	OPEN	OPEN	*****	***	********	********	****	*******
X087D	MK102	RVLIS	B D	54	***	OPEN	OPEN	OPEN	*****	***	********	********	****	*******
X088	MK103	SPARE	B D	54	***	OPEN	OPEN	OPEN	*****	***	********	********	****	*******
X089	MK104	SPARE	****	***	***	******	******	******	*****	***	********	********	****	*******
X090	MK105	CONTROL AIR TR-B	****	***	***	******	******	******	*****	***	********	********	****	*******
X091	MK105	CONTROL AIR TR-A	AB D	54	56	OPEN	OPEN	CLOSED	CHECK	***	SELF ACT	********	****	*******
X092A	*****	HYDROGEN ANALYZER TR-B	AB D	54	56	OPEN	OPEN	CLOSED	CHECK	***	SELF ACT	********	****	*******
X092B	*****	HYDROGEN ANALYZER TR-B	B	54	56	CLOSED	CLOSED	OPEN	GLOBE	AIR	REM.MAN.	********	5.00	LCL.MAN.
X092C	MK034	PAS HOT LEG 1 TR-B	B	54	56	CLOSED	CLOSED	OPEN	GLOBE	AIR	REM.MAN.	********	5.00	LCL.MAN.
X092D	*****	SPARE	AB D	54	55	CLOSED	CLOSED	VARIES	GLOBE	SOLND	REM.MAN.	********	5.00	LCL.MAN.
X093	MK058	ACCUM SAMPLE	****	***	***	******	******	******	*****	****	********	********	****	*******
X094A	MK059A	UPPER COMP AIR MON INTAKE	AB D	54	56	VARIES	CLOSED	CLOSED	GLOBE	AIR	AUTOTRIP	PHASE A	5.00	REM.MAN.
X094B	MK059A	UPPER COMP AIR MON INTAKE	AB D	54	56	OPEN	OPEN	CLOSED	GLOBE	AIR	AUTOTRIP	CONTVENT	5.00	REM.MAN.
X094C	MK059A	UPPER COMP AIR MON RETURN	AB D	54	56	OPEN	OPEN	CLOSED	GLOBE	AIR	AUTOTRIP	CONTVENT	5.00	REM.MAN.
X095A	MK060M	LOWER COMP AIR MON INTAKE	AB D	54	56	OPEN	OPEN	CLOSED	GLOBE	AIR	AUTOTRIP	CONTVENT	5.00	REM.MAN.

TABLE 6.2.4-1 (Continued)

PENETRATION IDENTIF. PRIM. CONT.	SHIELD BLDG.	PENETRATING EQUIPMENT NAME	POSSIBLE LEAK PATHS	10CFR50 CRITERIA CONFORMANCE		LINE STATUS DURING OPERATIONAL PHASE NORMAL	SHUTDN	ACCID.	ISOLATION VALVE IN PRIMARY CONTAINMENT VALVE TYPE	VALVE OPER.	PRIMARY MODE OF ACTUATION	ACTUATING SIGNAL	OPER TIME (SEC)	SECONDARY MODE OF ACTUATION
X095B	MK060M	LOWER COMP AIR MON INTAKE	AB D	54	56	OPEN	OPEN	CLOSED	GLOBE	AIR	AUTOTRIP	CONTVENT	5.00	REM.MAN.
X095C	MK060M	LOWER COMP AIR MON INTAKE	AB D	54	56	OPEN	OPEN	CLOSED	GLOBE	AIR	AUTOTRIP	CONTVENT	5.00	REM.MAN.
X096A	******	dP SENSOR	B	54	***	OPEN	OPEN	OPEN	*****	***	********	********	****	*******
X096B	MK106M	ILRT SENSOR LINE	B	54	56	CLOSED	VARIES	CLOSED	GLOBE	MAN	LCL.MAN.	********	****	*******
X096C	MK106M	ILRT SENSOR LINE	B	54	56	CLOSED	VARIES	CLOSED	GLOBE	MAN	LCL.MAN.	********	****	*******
X097	******	dP SENSOR	B	54	56	OPEN	OPEN	CLOSED	SOLND	AIR	AUTOTRIP	PHASE A	5.00	LCL.MAN.
X098	MK108	SPARE	****	***	***	******	******	******	*****	***	********	********	****	*******
X099	******	H2 ANALYZER TR-A	B	54	56	CLOSED	CLOSED	OPEN	GLOBE	AIR	REM.MAN.	********	5.00	LCL.MAN.
X100	******	H2 ANALYZER TR-A	B	54	56	CLOSED	CLOSED	OPEN	GLOBE	AIR	REM.MAN.	********	5.00	LCL.MAN.
X101	MK054	~~CONT SUMP TR-B~~ SPARE	~~AB D~~	~~54~~	~~56~~	~~CLOSED~~	~~CLOSED~~	~~VARIES~~	~~GLOBE~~	~~AIR~~	~~REM.MAN.~~	********	****	*******
X102	******	SPARE	****	***	***	******	******	******	*****	***	********	********	****	*******
X103	******	SPARE	****	***	***	******	******	******	*****	***	********	********	****	*******
X104	******	SPARE	****	***	***	******	******	******	*****	***	********	********	****	*******
X105	MK033	PAS CONT AIR RTRN TR-B	AB D	54	56	CLOSED	CLOSED	VARIES	CHECK	***	SELF ACT	********	****	*******
X106	MK048	PAS HOT LEG 3 TR-B	AB D	54	56	CLOSED	CLOSED	VARIES	GLOBE	SOLND	REM.MAN.	********	****	*******
X107	MK038	RHR SUPPLY TO PUMPS	B D	54	55	CLOSED	VARIES	VARIES	GATE	MOTOR	REM.MAN.	********	5.00	LCL.MAN.
X108	AS108	UPPER HEAD INJECTION	B D	54	55	CLOSED	CLOSED	VARIES	CHECK	***	SELF ACT	********	15.00	LCL.MAN.
X109	AS109	UPPER HEAD INJECTION	B D	54	55	CLOSED	CLOSED	VARIES	CHECK	***	SELF ACT	********	****	*******
X110	MK032	UH VALVE TEST LINE	A D	54	55	CLOSED	VARIES	CLOSED	GLOBE	AIR	AUTOTRIP	PHASE A	10.00	REM.MAN.
X111	******	SPARE	****	***	***	******	******	******	*****	***	********	********	****	*******
X112	******	SPARE	****	***	***	******	******	******	*****	***	********	********	****	*******
X113	******	SPARE	****	***	***	******	******	******	*****	***	********	********	****	*******
X114	MK110	GLYCOL FLOOR COOLING (FROM)	AB D	54	56	OPEN	OPEN	CLOSED	DIAPH	AIR	AUTOTRIP	PHASE A	30.00	REM.MAN.
X115	MK111	GLYCOL FLOOR COOLING (TO)	AB D	54	56	OPEN	OPEN	CLOSED	DIAPH	AIR	AUTOTRIP	PHASE A	30.00	REM.MAN.
X116	MK007	SPARE	****	***	***	******	******	******	*****	***	********	********	****	*******
X117	MK008	MAINTENANCE PORT	AB	***	***	CLOSED	VARIES	CLOSED	*****	***	********	********	****	*******
X118	MK018	LAYUP WATER TREATMENT	ABC	***	***	CLOSED	OPEN	CLOSED	BLDFL	MAN.	LCL.MAN.	********	****	*******
X119	******	SPARE	****	***	***	******	******	******	*****	***	********	********	****	*******
X120	******	SPARE	****	***	***	******	******	******	*****	***	********	********	****	*******

482

TABLE 6.2.4-1 (Continued)

PENETRATION IDENTIF.		ISOLATION VALVE IN ANNULUS						ISOLATION VALVE OUTSIDE SHIELD BUILDING							
PRIM CONT	SHIELD BLDG	VALVE TYPE	VALVE OPER	PRIMARY MODE OF ACTUATION	ACTUATING SIGNAL	OPER TIME (SEC)	SECONDARY MODE OF ACTUATION	VALVE TYPE	VALVE OPER	PRIMARY MODE OF ACTIATOPM	ACTUATING SIGNAL	OPER TIME (SEC)	SECONDARY MODE OF ACTUATION	OTHER ISOL VALVES	NOTE FOR MORE DATA ON OTHER VALVES
X001	*******	*****	*****	********	*******	****	*******	DOOR	MAN.	LCL MAN.	*******	****	*******	NO	***
X002A	*******	*****	*****	********	*******	****	*******	DOOR	MAN.	LCL MAN.	*******	****	*******	NO	***
X002B	*******	*****	*****	********	*******	****	*******	DOOR	MAN.	LCL MAN.	*******	****	*******	NO	***
X003	MK062	*****	*****	********	*******	****	*******	BTFLY	MAN.	REM MAN.	*******	****	*******	NO	***
X004	F005	BTFLY	AIR	AUTOTRIP	CONTVENT	4.00	REM MAN.	BTFLY	AIR	AUTOTRIP	CONVENT	4.00	REM MAN.	YES	3,7,14,22
X005	F005	BTFLY	AIR	AUTOTRIP	CONTVENT	4.00	REM MAN.	BTFLY	AIR	AUTOTRIP	CONVENT	4.00	REM MAN.	YES	3,7,14,22
X006	F005	BTFLY	AIR	AUTOTRIP	CONTVENT	4.00	REM MAN.	BTFLY	AIR	AUTOTRIP	CONVENT	4.00	REM MAN.	YES	3,7,14,22
X007	F005	BTFLY	AIR	AUTOTRIP	CONTVENT	4.00	REM MAN.	BTFLY	AIR	AUTOTRIP	CONVENT	4.00	REM MAN.	YES	3,7,14,22
X008	*******	*****	*****	********	*******	****	*******	*****	***	********	*******	****	*******	***	***
X008A	*******	*****	*****	********	*******	****	*******	DIAPH	AIR	REM MAN.	*******	6.50	LCL MAN.	YES	33,36
X008B	*******	*****	*****	********	*******	****	*******	DIAPH	AIR	REM MAN.	*******	6.50	LCL MAN.	NO	33
X008C	*******	*****	*****	********	*******	****	*******	DIAPH	AIR	REM MAN.	*******	6.50	LCL MAN.	NO	33
X008D	*******	*****	*****	********	*******	****	*******	DIAPH	AIR	REM MAN.	*******	6.50	LCL MAN.	YES	33,36
X009A	F002	BTFLY	AIR	AUTOTRIP	CONTVENT	4.00	REM MAN.	BTFLY	AIR	AUTOTRIP	CONVENT	~~4.00~~ 20.00	REM MAN.	YES	3,7,14,22
X009B	F002	BTFLY	AIR	AUTOTRIP	CONTVENT	4.00	REM MAN.	BTFLY	AIR	AUTOTRIP	CONVENT	~~4.00~~ 20.00	REM MAN.	YES	3,7,14,22
X010A	F002	BTFLY	AIR	AUTOTRIP	CONTVENT	4.00	REM MAN.	BTFLY	AIR	AUTOTRIP	CONVENT	~~4.00~~ 20.00	REM MAN.	YES	3,7,14,22
X010B	F002	BTFLY	AIR	AUTOTRIP	CONTVENT	4.00	REM MAN.	BTFLY	AIR	AUTOTRIP	CONVENT	~~4.00~~ 20.00	REM MAN.	YES	3,7,14,22
X011	F002	BTFLY	AIR	AUTOTRIP	CONTVENT	4.00	REM MAN.	BTFLY	AIR	AUTOTRIP	CONVENT	~~4.00~~ 20.00	REM MAN.	YES	3,7,14,22
X012A	MK067	*****	***	********	*******	****	*******	GATE	MOTOR	REM MAN.	*******	6.50	LCL MAN.	YES	33,38
X012B	MK068	*****	***	********	*******	****	*******	GATE	MOTOR	REM MAN.	*******	6.50	LCL MAN.	YES	33,38
X012C	MK069	*****	***	********	*******	****	*******	GATE	MOTOR	REM MAN.	*******	6.50	LCL MAN.	YES	33,38
X012D	MK070	*****	***	********	*******	****	*******	GATE	MOTOR	REM MAN.	*******	6.50	LCL MAN.	YES	33,38
X013A	MK063	*****	***	********	*******	****	*******	GATE	MOTOR	REM MAN.	*******	5.00	LCL MAN.	NO	33
X013B	MK064	*****	***	********	*******	****	*******	GATE	MOTOR	REM MAN.	*******	5.00	LCL MAN.	NO	33
X013C	MK065	*****	***	********	*******	****	*******	GATE	MOTOR	REM MAN.	*******	5.00	LCL MAN.	NO	33
X013D	MK066	*****	***	********	*******	****	*******	GATE	MOTOR	REM MAN.	*******	5.00	LCL MAN.	NO	33
X014A	AS014A	*****	***	********	*******	****	*******	ANGLE	AIR	AUTOTRIP	PHASE A	10.00	REM MAN.	NO	4
X014B	AS014B	*****	***	********	*******	****	*******	ANGLE	AIR	AUTOTRIP	PHASE A	10.00	REM MAN.	NO	4
X014C	AS014C	*****	***	********	*******	****	*******	ANGLE	AIR	AUTOTRIP	PHASE A	10.00	REM MAN.	NO	4
X014D	AS014D	*****	***	********	*******	****	*******	ANGLE	AIR	AUTOTRIP	PHASE A	10.00	REM MAN.	NO	4
X015	AS015	*****	***	********	*******	****	*******	GLOBE	AIR	AUTOTRIP	PHASE A	10.00	REM MAN.	YES	5
X016	MK019	*****	***	********	*******	****	*******	*****	*****	********	*******	*****	*******	NO	***
X017	MK027	*****	***	********	*******	****	*******	*****	*****	********	*******	*****	*******	YES	31
X018	*****	*****	***	********	*******	****	*******	*****	*****	********	*******	*****	*******	***	***
X019A	*****	*****	***	********	*******	****	*******	GATE	MOTOR	REM MAN.	*******	*****	LCL MAN.	YES	37
X019B	*****	*****	***	********	*******	****	*******	GATE	MOTOR	REM MAN.	*******	*****	LCL MAN.	YES	37
X020A	AS020A	*****	***	********	*******	****	*******	*****	*****	********	*******	*****	*******	YES	31
X020B	AS020B	*****	***	********	*******	****	*******	*****	*****	********	*******	*****	*******	YES	31
X021	AS021	*****	***	********	*******	****	*******	*****	*****	********	*******	*****	*******	YES	31
X022	AS022	*****	***	********	*******	****	*******	*****	*****	********	*******	*****	*******	YES	17

TABLE 6.2.4-1 (Continued)

PENETRATION IDENTIF. PRIM CONT	SHIELD BLDG	ISOLATION VALVE IN ANNULUS: VALVE TYPE	VALVE OPER	PRIMARY MODE OF ACTUATION	ACTUATING SIGNAL	OPER TIME (SEC)	SECONDARY MODE OF ACTUATION	ISOLATION VALVE OUTSIDE SHIELD BUILDING: VALVE TYPE	VALVE OPER	PRIMARY MODE OF ACTIATOPM	ACTUATING SIGNAL	OPER TIME (SEC)	SECONDARY MODE OF ACTUATION	OTHER ISOL VALVES	NOTE FOR MORE DATA ON OTHER VALVES
X023	MK061	GLOBE	SOLND	REM MAN.	*******	5.00	LCL MAN.	*****	*****	********	*******	*****	*******	NO	28
X024A	AS024	*****	***	********	*******	****	*******	*****	*****	********	*******	*****	*******	***	25
X025A	MK044M	GLOBE	AIR	AUTOTRIP	PHASE A	5.00	REM MAN.	*****	*****	********	*******	*****	*******	NO	23
X025B	******	*****	***	********	*******	****	*******	*****	*****	********	*******	*****	*******	***	18
X025C	******	*****	***	********	*******	****	*******	*****	*****	********	*******	*****	*******	***	***
X025D	MK044M	GLOBE	AIR	AUTOTRIP	PHASE A	5.00	REM MAN.	*****	*****	********	*******	*****	*******	NO	23
X026A	MK045M	GLOBE	MAN.	LCL MAN.	*******	****	*******	*****	*****	********	*******	*****	*******	NO	***
X026B	MK045M	GLOBE	MAN.	LCL MAN.	*******	****	*******	*****	*****	********	*******	*****	*******	NO	***
X026C	******	*****	***	********	*******	****	*******	*****	*****	********	*******	*****	*******	***	18
X027A	MK046M	GLOBE	AIR	AUTOTRIP	PHASE A	10.00	REM MAN.	*****	*****	********	*******	*****	*******	NO	23
X027B	MK046M	GLOBE	AIR	AUTOTRIP	PHASE A	10.00	REM MAN.	*****	*****	********	*******	*****	*******	NO	23
X027C	MK046M	GLOBE	AIR	AUTOTRIP	PHASE A	10.00	REM MAN.	*****	*****	********	*******	*****	*******	NO	23
X027D	MK046M	GLOBE	AIR	AUTOTRIP	PHASE A	10.00	REM MAN.	*****	*****	********	*******	*****	*******	NO	23
X028	MK034	GLOBE	SOLND	REM MAN.	*******	5.00	LCL MAN.	*****	*****	********	*******	*****	*******	NO	28
X029	MK050	*****	*****	********	*******	****	*******	BTFLY	MOTOR	AUTOTRIP	PHASE B	60.00	REM MAN.	YES	9
X030	MK030	*****	*****	********	*******	****	*******	GLOBE	AIR	AUTOTRIP	PHASE A	10.00	REM MAN.	YES	10
X031	MK049	*****	*****	********	*******	****	*******	GATE	MOTOR	AUTOTRIP	PHASE A	20.00	LCL MAN.	NO	***
X032	AS032	*****	*****	********	*******	****	*******	*****	*****	********	*******	*****	*******	YES	31
X033	AS033	*****	*****	********	*******	****	*******	*****	*****	********	*******	*****	*******	YES	19
X034	MK043	GLOBE	AIR	AUTOTRIP	PHASE B	10.00	LCL MAN.	*****	*****	********	*******	*****	*******	YES	11
X035	MK042	*****	*****	********	*******	****	*******	BTFLY	AIR	AUTOTRIP	PHASE A	10.00	REM MAN.	NO	***
X036	MK020	BLDFL	MAN.	LCL MAN.	*******	****	*******	*****	*****	********	*******	*****	*******	NO	***
X037	MK014	BLDFL	MAN.	LCL MAN.	*******	****	*******	*****	*****	********	*******	*****	*******	NO	***
X038	MK013	*****	*****	********	*******	****	*******	*****	*****	********	*******	*****	*******	***	***
X039A	MK055M	*****	*****	********	*******	****	*******	GLOBE	AIR	AUTOTRIP	PHASE A	10.00	REM MAN.	NO	***
X039B	MK055M	*****	*****	********	*******	****	*******	DIAPH	AIR	AUTOTRIP	PHASE A	10.00	REM MAN.	NO	***
X039C	MK055M	*****	*****	********	*******	****	*******	*****	*****	********	*******	*****	*******	***	***
X039D	MK055M	*****	*****	********	*******	****	*******	*****	*****	********	*******	*****	*******	***	***
X040A	MK009	*****	*****	********	*******	****	*******	GATE	AIR	REM MAN.	*******	*****	LCL MAN.	YES	33,34
X040B	MK011	*****	*****	********	*******	****	*******	GATE	AIR	REM MAN.	*******	*****	LCL MAN.	YES	33,34
X040C	MK010	*****	*****	********	*******	****	*******	*****	*****	********	*******	*****	*******	***	***
X040D	MK012	*****	*****	********	*******	****	*******	BLDFL	MAN.	LCL MAN.	*******	*****	*******	NO	***
X041	MK047	*****	*****	********	*******	****	*******	BALL	AIR	AUTOTRIP	PHASE A	10.00	REM MAN.	NO	***
X042	MK039	*****	*****	********	*******	****	*******	DIAPH	AIR	AUTOTRIP	PHASE A	10.00	REM MAN.	NO	***
X043A	MK031	*****	*****	********	*******	****	*******	*****	*****	********	*******	*****	*******	NO	***
X043B	MK029	*****	*****	********	*******	****	*******	*****	*****	********	*******	*****	*******	NO	***
X043C	MK028	*****	*****	********	*******	****	*******	*****	*****	********	*******	*****	*******	NO	***
X043D	MK030	*****	*****	********	*******	****	*******	*****	*****	********	*******	*****	*******	NO	***
X044	MK037	*****	*****	********	*******	****	*******	GATE	MOTOR	AUTOTRIP	PHASE A	10.00	REM MAN.	YES	9
X045	AS045	*****	*****	********	*******	****	*******	DIAPH	AIR	AUTOTRIP	PHASE A	10.00	REM MAN.	YES	6

N53

TABLE 6.2.4-1 (Continued)

PENETRATION IDENTIF.		ISOLATION VALVE IN ANNULUS						ISOLATION VALVE OUTSIDE SHIELD BUILDING							
PRIM CONT	SHIELD BLDG	VALVE TYPE	VALVE OPER	PRIMARY MODE OF ACTUATION	ACTUATING SIGNAL	OPER TIME (SEC)	SECONDARY MODE OF ACTUATION	VALVE TYPE	VALVE OPER	PRIMARY MODE OF ACTIATOPM	ACTUATING SIGNAL	OPER TIME (SEC)	SECONDARY MODE OF ACTUATION	OTHER ISOL VALVES	NOTE FOR MORE DATA ON OTHER VALVES
X046	AS046	*****	*****	*********	*******	****	*******	DIAPH	AIR	AUTOTRIP	PHASE A	10.00	REM MAN.	YES	26
X047A	MK025	*****	*****	*********	*******	****	*******	DIAPH	AIR	AUTOTRIP	PHASE A	30.00	REM MAN.	YES	9
X047B	MK026	*****	*****	*********	*******	****	*******	DIAPH	AIR	AUTOTRIP	PHASE A	30.00	REM MAN.	YES	9
X048A	MK004	*****	*****	*********	*******	****	*******	*****	*****	********	*******	*****	*******	NO	***
X048B	MK003	*****	*****	*********	*******	****	*******	*****	*****	********	*******	*****	*******	NO	***
X049A	MK002	*****	*****	*********	*******	****	*******	*****	*****	********	*******	*****	*******	NO	***
X049B	MK001	*****	*****	*********	*******	****	*******	GATE	MOTOR	AUTOTRIP	PHASE B	60.00	REM MAN.	YES	9
X050A	MK016	*****	*****	*********	*******	****	*******	GATE	MOTOR	AUTOTRIP	PHASE B	60.00	REM MAN.	YES	***
X050B	MK017	*****	*****	*********	*******	****	*******	*****	*****	********	*******	*****	*******	***	***
X051	MK035	*****	*****	*********	*******	****	*******	BTFLY	MOTOR	AUTOTRIP	PHASE B	60.00	REM MAN.	NO	***
X052	MK040	*****	*****	*********	*******	****	*******	BTFLY	MOTOR	AUTOTRIP	PHASE B	60.00	REM MAN.	NO	***
X053	MK041	*****	*****	*********	*******	****	*******	BLDFL	MAN.	LCL MAN.	*******	*****	*******	NO	24
X054	MK072	BLDFL	MAN.	LCL MAN.	*******	****	*******	*****	*****	********	*******	*****	*******	***	***
X055	MK015	*****	*****	*********	*******	****	*******	*****	*****	********	*******	*****	*******	NO	***
X056A	MK080	BTFLY	MOTOR	AUTOTRIP	PHASE B	60.00	REM MAN.	*****	*****	********	*******	*****	*******	***	***
X056B	MK127	*****	*****	*********	*******	****	*******	*****	*****	********	*******	*****	*******	YES	9
X057A	MK081	BTFLY	MOTOR	AUTOTRIP	PHASE B	60.00	REM MAN.	*****	*****	********	*******	*****	*******	***	***
X057B	MK128	*****	*****	*********	*******	****	*******	*****	*****	********	*******	*****	*******	NO	***
X058A	MK079	BTFLY	MOTOR	AUTOTRIP	PHASE B	60.00	REM MAN.	*****	*****	********	*******	*****	*******	***	***
X058B	MK126	*****	*****	*********	*******	****	*******	*****	*****	********	*******	*****	*******	YES	9
X059A	MK078	BTFLY	MOTOR	AUTOTRIP	PHASE B	60.00	REM MAN.	*****	*****	********	*******	*****	*******	***	***
X059B	MK125	*****	*****	*********	*******	****	*******	*****	*****	********	*******	*****	*******	NO	***
X060A	MK077	BTFLY	MOTOR	AUTOTRIP	PHASE B	60.00	REM MAN.	*****	*****	********	*******	*****	*******	***	***
X060B	MK132	*****	*****	*********	*******	****	*******	*****	*****	********	*******	*****	*******	YES	9
X061A	MK076	BTFLY	MOTOR	AUTOTRIP	PHASE B	60.00	REM MAN.	*****	*****	********	*******	*****	*******	***	***
X061B	MK131	*****	*****	*********	*******	****	*******	*****	*****	********	*******	*****	*******	NO	***
X062A	MK074	BTFLY	MOTOR	AUTOTRIP	PHASE B	60.00	REM MAN.	*****	*****	********	*******	*****	*******	***	***
X062B	MK130	*****	*****	*********	*******	****	*******	*****	*****	********	*******	*****	*******	YES	9
X063A	MK075	BTFLY	MOTOR	AUTOTRIP	PHASE B	60.00	REM MAN.	*****	*****	********	*******	*****	*******	***	***
X063B	MK129	*****	*****	*********	*******	****	*******	*****	*****	********	*******	*****	*******	NO	***
X064	MK092	PLUG	AIR	AUTOTRIP	PHASE A	10.00	REM MAN.	*****	*****	********	*******	*****	*******	***	***
X065	MK090	PLUG	AIR	AUTOTRIP	PHASE A	10.00	REM MAN.	*****	*****	********	*******	*****	*******	YES	9
X066	MK093	PLUG	AIR	AUTOTRIP	PHASE A	10.00	REM MAN.	*****	*****	********	*******	*****	*******	***	***
X067	MK091	PLUG	AIR	AUTOTRIP	PHASE A	10.00	REM MAN.	*****	*****	********	*******	*****	*******	YES	9
X068	MK088	PLUG	MOTOR	AUTOTRIP	PHASE B	60.00	REM MAN.	*****	*****	********	*******	*****	*******	YES	9
X069	MK086	PLUG	MOTOR	AUTOTRIP	PHASE B	60.00	REM MAN.	*****	*****	********	*******	*****	*******	YES	9
X070	MK084	PLUG	MOTOR	AUTOTRIP	PHASE B	60.00	REM MAN.	*****	*****	********	*******	*****	*******	YES	9
X071	MK082	PLUG	MOTOR	AUTOTRIP	PHASE B	60.00	REM MAN.	*****	*****	********	*******	*****	*******	NO	***
X072	MK089	PLUG	MOTOR	AUTOTRIP	PHASE B	60.00	REM MAN.	*****	*****	********	*******	*****	*******	NO	***
X073	MK087	PLUG	MOTOR	AUTOTRIP	PHASE B	60.00	REM MAN.	*****	*****	********	*******	*****	*******	YES	9
														YES	9
														YES	9
														YES	9

Revised by Amendment 52
Sheet 14 of 35

TABLE 6.2.4-1 (Continued)

PENETRATION IDENTIF.		ISOLATION VALVE IN ANNULUS						ISOLATION VALVE OUTSIDE SHIELD BUILDING							
PRIM CONT	SHIELD BLDG	VALVE TYPE	VALVE OPER	PRIMARY MODE OF ACTUATION	ACTUATING SIGNAL	OPER TIME (SEC)	SECONDARY MODE OF ACTUATION	VALVE TYPE	VALVE OPER	PRIMARY MODE OF ACTIATOPM	ACTUATING SIGNAL	OPER TIME (SEC)	SECONDARY MODE OF ACTUATION	OTHER ISOL VALVES	NOTE FOR MORE DATA ON OTHER VALVES
X074	MK085	PLUG	MOTOR	AUTOTRIP	PHASE B	60.00	REM MAN.	******	*****	********	*******	*****	*******	NO	***
X075	MK083	PLUG	MOTOR	AUTOTRIP	PHASE B	60.00	REM MAN.	******	*****	********	*******	*****	*******	NO	***
X076	MK097	*****	*****	*********	*******	****	*******	DIAPH	MAN.	LCL MAN.	*******	*****	*******	NO	***
X077	MK096	*****	*****	*********	*******	****	*******	DIAPH	MAN.	LCL MAN.	*******	*****	*******	NO	***
X078	MK098	*****	*****	*********	*******	****	*******	GATE	MOTOR	AUTOTRIP	PHASE A	20.00	LCL MAN.	NO	***
X079A	MK023	BLDFL	MAN.	LCL MAN.	*******	****	*******	BLDFL	MAN.	LCL MAN.	*******	*****	*******	NO	***
X079B	MK024	BLDFL	MAN.	LCL MAN.	*******	****	*******	BLDFL	MAN.	LCL MAN.	*******	*****	*******	NO	***
X080	MK071	BTFLY	AIR	AUTOTRIP	CONTVENT	4.00	REM MAN.	BTFLY	AIR	AUTOTRIP	CONTVENT	4.00	REM MAN.	YES	3,7,22
X081	AS081	*****	*****	*********	*******	****	*******	DIAPH	AIR	AUTOTRIP	PHASE A	10.00	REM MAN.	NO	***
X082	MK094	*****	*****	*********	*******	****	*******	DIAPH	MAN.	LCL MAN.	*******	*****	*******	NO	***
X083	MK095	*****	*****	*********	*******	****	*******	DIAPH	MAN.	LCL MAN.	*******	*****	*******	NO	***
X084	MK099M	GLOBE	AIR	AUTOTRIP	PHASE A	10.00	REM MAN.	******	*****	********	*******	*****	*******	NO	***
X084B	MK101	*****	*****	*********	*******	****	*******	******	*****	********	*******	*****	*******	***	32
X084C	MK101	*****	*****	*********	*******	****	*******	******	*****	********	*******	*****	*******	***	32
X084D	MK101	*****	*****	*********	*******	****	*******	******	*****	********	*******	*****	*******	***	32
X085A	MK100M	GLOBE	AIR	AUTOTRIP	PHASE A	5.00	REM MAN.	******	*****	********	*******	*****	*******	NO	23
X085B	MK100M	GLOBE	AIR	AUTOTRIP	PHASE A	10.00	REM MAN.	******	*****	********	*******	*****	*******	NO	23
X085C	******	*****	*****	*********	*******	****	*******	******	*****	********	*******	*****	*******	***	18
X085D	MK100M	*****	*****	*********	*******	****	*******	******	*****	********	*******	*****	*******	***	***
X086A	MK061	GLOBE	SOLND	REM MAN.	*******	5.00	LCL MAN.	******	*****	********	*******	*****	*******	NO	28
X086B	MK033	GLOBE	SOLND	REM MAN.	*******	5.00	LCL MAN.	******	*****	********	*******	*****	*******	NO	28
X086C	MK054	GLOBE	SOLND	REM MAN.	*******	5.00	LCL MAN.	******	*****	********	*******	*****	*******	NO	28
X086D	MK101M	*****	*****	*********	*******	****	*******	******	*****	********	*******	*****	*******	***	***
→ X087A	~~MK040~~ 102	~~GLOBE~~	~~SOLND~~	~~REM MAN.~~	*******	~~5.00~~ ***	~~LCL MAN.~~ *****	******	*****	********	*******	*****	*******	~~NO~~ ***	~~28~~ ***
X087B	MK102	*****	*****	*********	*******	****	*******	******	*****	********	*******	*****	*******	***	32
X087C	MK102	*****	*****	*********	*******	****	*******	******	*****	********	*******	*****	*******	***	32
X087D	MK102	*****	*****	*********	*******	****	*******	******	*****	********	*******	*****	*******	***	32
X088	MK103	*****	*****	*********	*******	****	*******	******	*****	********	*******	*****	*******	***	***
X089	MK104	*****	*****	*********	*******	****	*******	******	*****	********	*******	*****	*******	***	***
X090	MK105	GLOBE	AIR	AUTOTRIP	PHASE B	10.00	REM MAN.	******	*****	********	*******	*****	*******	YES	11
X091	MK056	GLOBE	AIR	AUTOTRIP	PHASE B	10.00	REM MAN.	******	*****	********	*******	*****	*******	YES	11
X092A	******	*****	*****	*********	*******	****	*******	******	*****	********	*******	*****	*******	NO	23
X092B	******	*****	*****	*********	*******	****	*******	******	*****	********	*******	*****	*******	NO	23
X092C	MK034	GLOBE	SOLND	REM MAN.	*******	5.00	LCL MAN.	******	*****	********	*******	*****	*******	NO	***
X092D	******	*****	*****	*********	*******	****	*******	******	*****	********	*******	*****	*******	***	28
X093	MK058	GLOBE	AIR	AUTOTRIP	PHASE A	5.00	LCL MAN.	******	*****	********	*******	*****	*******	NO	***
X094A	MK059M	GLOBE	AIR	AUTOTRIP	CONTVENT	5.00	REM MAN.	******	*****	********	*******	*****	*******	NO	***
X094B	MK059M	GLOBE	AIR	AUTOTRIP	CONTVENT	5.00	REM MAN.	******	*****	********	*******	*****	*******	NO	***
X094C	MK059M	GLOBE	AIR	AUTOTRIP	CONTVENT	5.00	REM MAN.	******	*****	********	*******	*****	*******	NO	***
X095A	MK060M	GLOBE	AIR	AUTOTRIP	CONTVENT	5.00	REM MAN.	******	*****	********	*******	*****	*******	NO	***

83

TABLE 6.2.4-1 (Continued)

PENETRATION IDENTIF.		ISOLATION VALVE IN ANNULUS						ISOLATION VALVE OUTSIDE SHIELD BUILDING							
PRIM CONT	SHIELD BLDG	VALVE TYPE	VALVE OPER	PRIMARY MODE OF ACTUATION	ACTUATING SIGNAL	OPER TIME (SEC)	SECONDARY MODE OF ACTUATION	VALVE TYPE	VALVE OPER	PRIMARY MODE OF ACTIATOPM	ACTUATING SIGNAL	OPER TIME (SEC)	SECONDARY MODE OF ACTUATION	OTHER ISOL VALVES	NOTE FOR MORE DATA ON OTHER VALVES
X095B	MK060M	GLOBE	AIR	AUTOTRIP	CONTVENT	5.00	REM MAN.	******	*****	********	*******	*****	*******	NO	***
X095C	MK060M	GLOBE	AIR	AUTOTRIP	CONTVENT	5.00	REM MAN.	******	*****	********	*******	*****	*******	NO	***
X096A	******	*****	*****	*********	*******	****	*******	******	*****	********	*******	*****	*******	***	18
X096B	MK106M	GLOBE	MAN.	LCL MAN.	*******	****	*******	******	*****	********	*******	*****	*******	NO	***
X096C	MK106M	GLOBE	MAN.	LCL MAN.	*******	****	*******	******	*****	********	*******	*****	*******	NO	***
X097	******	SOLND	AIR	AUTOTRIP	PHASE A	5.00	LCL MAN.	******	*****	********	*******	*****	*******	NO	***
X098	MK108	*****	*****	*********	*******	****	*******	******	*****	********	*******	*****	*******	***	***
X099	******	*****	*****	*********	*******	****	*******	******	*****	********	*******	*****	*******	YES	23
X100	******	*****	*****	*********	*******	****	*******	******	*****	********	*******	*****	*******	YES	23
X101	MK054	~~GLOBE~~	~~SOLND~~	~~REM MAN.~~	*******	~~5.00~~	~~LCL MAN.~~	******	*****	********	*******	*****	*******	NO	28
X102	******	*****	*****	*********	*******	****	*******	******	*****	********	*******	*****	*******	***	***
X103	******	*****	*****	*********	*******	****	*******	******	*****	********	*******	*****	*******	***	***
X104	******	*****	*****	*********	*******	****	*******	******	*****	********	*******	*****	*******	***	***
X105	MK033	GLOBE	SOLND	REM MAN.	*******	5.00	LCL MAN.	******	*****	********	*******	*****	*******	NO	28
X106	MK048	GLOBE	SOLND	REM MAN.	*******	5.00	LCL MAN.	******	*****	********	*******	*****	*******	NO	28
X107	MK038	*****	*****	*********	*******	****	*******	******	*****	********	*******	*****	*******	YES	20
X108	AS108	*****	*****	*********	*******	****	*******	******	*****	********	*******	*****	*******	YES	27
X109	AS109	*****	*****	*********	*******	****	*******	******	*****	********	*******	*****	*******	YES	27
X110	MK032	*****	*****	*********	*******	****	*******	GLOBE	AIR	AUTOTRIP	PHASE A	10.00	REM MAN.	YES	13
X111	******	*****	*****	*********	*******	****	*******	******	*****	********	*******	*****	*******	***	***
X112	******	*****	*****	*********	*******	****	*******	******	*****	********	*******	*****	*******	***	***
X113	******	*****	*****	*********	*******	****	*******	******	*****	********	*******	*****	*******	***	***
X114	MK110	*****	*****	*********	*******	****	*******	DIAPH	AIR	AUTOTRIP	PHASE A	30.00	REM MAN.	YES	9
X115	MK111	*****	*****	*********	*******	****	*******	DIAPH	AIR	AUTOTRIP	PHASE A	30.00	REM MAN.	YES	9
X116	MK007	*****	*****	*********	*******	****	*******	******	*****	********	*******	*****	*******	***	***
X117	MK008	BLDFL	MAN.	LCL MAN.	*******	****	*******	******	*****	********	*******	*****	*******	NO	***
X118	MK018	BLDFL	MAN.	LCL MAN.	*******	****	*******	******	*****	********	*******	*****	*******	NO	***
X119	******	*****	*****	*********	*******	****	*******	******	*****	********	*******	*****	*******	***	***
X120	******	*****	*****	*********	*******	****	*******	******	*****	********	*******	*****	*******	***	***

52

TABLE 6.2.4-1 (Continued)

PENETRATION IDENTIF. PRIM. CONT.	SHIELD BLDG.	ISOLATION VALVE DATA: IN PRIMARY CONTAINMENT VALVE NO.	ESF TRAIN	POS IND	FAIL POS.	IN ANNULUS VALVE NO.	ESF TRAIN	POS IND	FAIL POS.	OUTSIDE SHIELD BLDG VALVE NO.	ESF TRAIN	POS IND	FAIL POS.	ACCIDENT OPERATIONAL REQUIREMENT (HR)	PENETRATION DETAILS: INSUL-ATION USED	FLUED HEAD LOCATION	NO. OF ANNULUS BELLOWS
X023	MK061	43-319	~~*****~~ B	YES	CLOSED	43-318	~~*****~~ B	YES	CLOSED	******	*****	***	******	2400.00	NO	*******	0
X024	AS024	68-559	*****	NO	******	******	*****	***	******	******	*****	***	******	2400.00	YES	ANNULUS	1
X025A	MK044	43-011	B	NO	CLOSED	43-012	A	NO	CLOSED	******	*****	***	******	0.0833	NO	*******	0
X025B	*****	******	*****	***	******	******	*****	***	******	******	*****	***	******	2400.00	***	*******	0
X025C	*****	******	*****	***	******	******	*****	***	******	******	*****	***	******	2400.00	***	*******	0
X025D	MK044M	43-002	B	NO	CLOSED	43-003	A	NO	CLOSED	******	*****	***	******	0.0833	NO	*******	0
X026A	MK045M	52-504	*****	NO	******	52-500	*****	NO	******	******	*****	***	******	******	NO	*******	0
X026B	MK045M	52-505	*****	NO	******	52-501	*****	NO	******	******	*****	***	******	******	NO	*******	0
X026C	******	******	*****	***	******	******	*****	***	******	******	*****	***	******	2400.00	***	*******	0
X027A	MK046M	43-54D	B	NO	CLOSED	43-55	A	NO	CLOSED	******	*****	***	******	0.0833	***	*******	0
X027B	MK046M	43-56D	B	NO	CLOSED	43-58	A	NO	CLOSED	******	*****	***	******	0.0833	***	*******	0
X027C	MK046M	43-59D	B	NO	CLOSED	43-61	A	NO	CLOSED	******	*****	***	******	0.0833	***	*******	0
X027D	MK046M	43-63D	B	NO	CLOSED	43-64	A	NO	CLOSED	******	*****	***	******	0.0833	***	*******	0
X028	MK034	~~43-269~~	*****	~~YES~~ NO	CLOSED	43-~~268~~ 241	~~*****~~ B	YES	CLOSED	******	*****	***	******	2400.00	***	*******	0
X029	MK050	70-089	B	YES	AS IS	******	*****	***	******	70-092	A	YES	AS IS	0.0833	NO	*******	0
X030	AS030	63-071	A	YES	CLOSED	******	*****	***	******	63-084	B	YES	CLOSED	0.0833	YES	ANNULUS	1
X031	MK049	26-1296	*****	NO	******	******	*****	***	******	26-243	A	NO	CLOSED	0.0833	***	*******	0
X032	AS032	63-545	*****	NO	******	******	*****	***	******	******	*****	***	******	2400.00	YES	ANNULUS	1
X033	AS033	63-553	*****	NO	******	******	*****	***	******	******	*****	***	******	2400.00	YES	ANNULUS	1
X034	MK043	32-293	*****	NO	******	32-110	A	YES	CLOSED	******	*****	***	******	0.0833	NO	ANNULUS	0
X035	MK042	******	*****	***	******	******	*****	***	******	70-085	B	YES	CLOSED	0.0833	NO	*******	0
X036	MK020	******	*****	***	******	******	*****	***	******	******	*****	***	******	******	NO	*******	0
X037	MK014	******	*****	***	******	******	*****	***	******	******	*****	***	******	******	NO	*******	0
X038	MK013	******	*****	***	******	******	*****	***	******	******	*****	***	******	******	***	*******	*
X039A	MK055M	77-868	*****	NO	******	******	*****	***	******	63-064	A	YES	CLOSED	0.0833	NO	*******	0
X039B	MK055M	77-849	*****	NO	******	******	*****	***	******	68-305	A	YES	CLOSED	0.0833	NO	*******	0
X039C	MK055M	******	*****	***	******	******	*****	***	******	******	*****	***	******	******	***	*******	0
X039D	MK055M	******	*****	***	******	******	*****	***	******	******	*****	***	******	******	***	*******	0
X040A	MK009	******	*****	***	******	******	*****	***	******	3-156	A	YES	OPEN	2400.00	NO	ANNULUS	0
X040B	MK011	******	*****	***	******	******	*****	***	******	3-148	B	YES	OPEN	2400.00	NO	ANNULUS	0
X040C	MK010	******	*****	***	******	******	*****	***	******	******	*****	***	******	******	***	*******	*
X040D	MK012	******	*****	***	******	******	*****	***	******	77-128	A	YES	CLOSED	2400.00	***	*******	0
X041	MK047	77-127	B	YES	CLOSED	******	*****	***	******	81-012	A	YES	CLOSED	0.0833	NO	ANNULUS	0
X042	MK039	81-502	*****	NO	******	******	*****	***	******	******	*****	***	******	0.0833	NO	ANNULUS	0
X043A	MK031	62-562	*****	NO	******	******	*****	***	******	******	*****	***	******	0.0833	NO	ANNULUS	0
X043B	MK029	62-561	*****	NO	******	******	*****	***	******	******	*****	***	******	0.0833	NO	ANNULUS	0
X043C	MK028	62-563	*****	NO	******	******	*****	***	******	******	*****	***	******	0.0833	NO	ANNULUS	0
X043D	MK030	62-560	*****	NO	******	******	*****	***	******	62-063	A	YES	AS IS	0.0833	NO	ANNULUS	0
X044	MK037	62-061	B	YES	AS IS	******	*****	***	******	77-019	A	YES	CLOSED	0.0833	YES	ANNULUS	1
X045	AS045	77-018	B	YES	CLOSED	******	*****	***	******								

43-N0030

EJ2

TABLE 6.2.4-1 (Continued)

PENETRATION IDENTIF. PRIM. CONT.	SHIELD BLDG.	ISOLATION VALVE DATA: IN PRIMARY CONTAINMENT VALVE NO.	ESF TRAIN	POS IND	FAIL POS.	IN ANNULUS VALVE NO.	ESF TRAIN	POS IND	FAIL POS.	OUTSIDE SHIELD BLDG VALVE NO.	ESF TRAIN	POS IND	FAIL POS.	ACCIDENT OPERATIONAL REQUIREMENT (HR)	PENETRATION DETAILS: INSULATION USED	FLUED HEAD LOCATION	NO. OF ANNULUS BELLOWS
X074	MK085	67-580B	*****	NO	******	67-138	B	YES	AS IS	******	*****	***	******	0.0833	NO	*******	0
X075	MK083	67-580C	*****	NO	******	67-133	A	YES	AS IS	******	*****	***	******	0.0833	NO	*******	0
X076	MK097	33-714	*****	NO	******	******	*****	***	******	33-713	*****	NO	******	******	NO	*******	0
X077	MK096	56-698	*****	NO	******	******	*****	***	******	59-522	*****	NO	******	******	NO	ANNULUS	0
X078	MK098	26-1260	*****	NO	******	******	*****	***	******	26-240	A	NO	AS IS	0.0833	***	*******	0
X079A	MK023	******	*****	***	******	******	*****	***	******	******	*****	***	******	******	NO	*******	0
X079B	MK024	******	*****	***	******	******	*****	***	******	******	*****	***	******	******	NO	*******	0
X080	MK071	30-040	A	YES	CLOSED	30-037	B	YES	CLOSED	30-061	A	YES	CLOSED	0.0833	NO	*******	0
X081	AS081	77-016	B	YES	CLOSED	******	*****	***	******	77-017	A	YES	CLOSED	0.0833	NO	ANNULUS	1
X082	MK094	78-560	*****	NO	AS IS	******	*****	***	******	78-561	*****	NO	AS IS	******	NO	ANNULUS	0
X083	MK095	78-558	*****	NO	AS IS	******	*****	***	******	78-557	*****	NO	AS IS	******	NO	ANNULUS	0
X084A	MK099M	68-308	B	YES	CLOSED	68-307	A	YES	CLOSED	******	*****	***	******	0.0833	NO	*******	0
X084B	MK101	******	*****	***	******	******	*****	***	******	******	*****	***	******	2400.00	NO	*******	0
X084C	MK101	******	*****	***	******	******	*****	***	******	******	*****	***	******	2400.00	NO	*******	0
X084D	MK101	******	*****	***	******	******	*****	***	******	******	*****	***	******	2400.00	NO	*******	0
X085A	MK100M	43-075	B	NO	CLOSED	43-077	A	NO	CLOSED	******	*****	***	******	0.0833	NO	*******	0
X085B	MK100M	43-022	B	NO	CLOSED	43-023	A	NO	CLOSED	******	*****	***	******	0.0833	NO	*******	0
X085C	******	******	*****	***	******	******	*****	***	******	******	*****	***	******	2400.00	***	*******	0
X085D	MK100M	******	*****	***	******	******	*****	***	******	******	*****	***	******	******	***	*******	*
X086A	MK061	43-288	~~*****~~ A	YES	CLOSED	43-287	~~*****~~ A	YES	CLOSED	******	*****	***	******	2400.00	NO	*******	0
X086B	MK033	******	*****	NO	******	43-307	~~*****~~ A	YES	CLOSED	******	*****	***	******	2400.00	NO	*******	0
X086C	MK054	******	*****	NO	******	43-~~312~~ 342	~~*****~~ A	YES	CLOSED	******	*****	***	******	2400.00	NO	*******	0
X086D	MK101M	******	*****	***	******	******	*****	***	******	******	*****	***	******	******	***	*******	*
X087A	~~MK048~~	~~*****~~	~~*****~~	~~***~~	~~*****~~	~~*****~~	~~*****~~	~~YES~~	~~CLOSED~~	~~43-312~~	~~*****~~	YES	CLOSED	******	*****	*****	*
X087B	MK102	******	*****	***	******	******	*****	****	******	******	*****	***	******	~~2400.00~~	***	~~ANNULUS~~	*
X087C	MK102	******	*****	***	******	******	*****	****	******	******	*****	***	******	2400.00	NO	*******	0
X087D	MK102	******	*****	***	******	******	*****	****	******	******	*****	***	******	2400.00	NO	*******	0
X088	MK103	******	*****	***	******	******	*****	****	******	******	*****	***	******	2400.00	NO	*******	0
X089	MK104	******	*****	***	******	******	*****	****	******	******	*****	***	******	******	***	*******	*
X090	MK105	32-313	*****	NO	******	32-102	B	YES	CLOSED	******	*****	***	******	******	***	*******	*
X091	MK056	32-303	*****	NO	******	32-80	A	YES	CLOSED	******	*****	***	******	0.0833	NO	ANNULUS	0
X092A	*****	43-207	B	YES	OPEN	******	*****	****	******	******	*****	***	******	0.0833	NO	*******	0
X092B	*****	43-208	B	YES	OPEN	******	*****	****	******	******	*****	***	******	2400.00	NO	*******	0
X092C	MK034	43-251	*****	YES	CLOSED	43-250	*****	YES	CLOSED	******	*****	***	******	2400.00	NO	*******	0
X092D	*****	******	*****	***	******	******	*****	****	******	******	*****	***	******	2400.00	NO	*******	0
X093	MK058	43-034	B	NO	CLOSED	43-035	A	NO	CLOSED	******	*****	***	******	******	***	*******	*
X094A	MK059M	90-114	B	YES	CLOSED	90-113	A	YES	CLOSED	******	*****	***	******	0.0833	NO	*******	0
X094B	MK059M	90-115	B	YES	CLOSED	90-113	A	YES	CLOSED	******	*****	***	******	0.0833	NO	*******	0
X094C	MK059M	90-116	B	YES	CLOSED	90-117	A	YES	CLOSED	******	*****	***	******	0.0833	NO	*******	0
X095A	MK060M	90-108	B	YES	CLOSED	90-107	A	YES	CLOSED	******	*****	***	******	0.0833	NO	*******	0

43-N0001

43-N0026

102

TABLE 6.2.4-1 (Continued)

PENETRATION IDENTIF.		ISOLATION VALVE DATA												ACCIDENT	PENETRATION DETAILS		
		IN PRIMARY CONTAINMENT				IN ANNULUS				OUTSIDE SHIELD BLDG				OPERATIONAL REQUIREMENT	INSUL-	FLUED	NO. OF
PRIM. CONT.	SHIELD BLDG.	VALVE NO.	ESF TRAIN	POS IND	FAIL POS.	VALVE NO.	ESF TRAIN	POS IND	FAIL POS.	VALVE NO.	ESF TRAIN	POS IND	FAIL POS.	(HR)	ATION USED	HEAD LOCATION	ANNULUS BELLOWS
X095B	MK060M	90-109	B	YES	CLOSED	90-107	A	YES	CLOSED	******	*****	***	******	0.0833	NO	*******	0
X095C	MK060M	90-110	B	YES	CLOSED	90-111	A	YES	CLOSED	******	*****	***	******	0.0833	NO	*******	0
X096A	******	******	*****	***	******	******	*****	***	******	******	*****	***	******	******	NO	*******	0
X096B	MK106M	52-507	*****	NO	******	52-503	*****	NO	******	******	*****	***	******	******	NO	*******	0
X096C	MK106M	52-506	*****	NO	******	52-502	*****	NO	******	******	*****	***	******	******	NO	*******	0
X097	******	30-134	*****	***	******	30-135	*****	***	******	******	*****	***	******	******	NO	ANNULUS	0
X098	******	******	*****	***	******	******	*****	***	******	******	*****	***	******	******	NO	ANNULUS	0
X099	******	43-202	A	YES	OPEN	******	*****	***	******	******	*****	***	******	2400.00	NO	*******	0
X100	******	43-201	A	YES	OPEN	******	*****	***	******	******	*****	***	******	2400.00	NO	*******	0
X101	MK054	******	*****	~~NO~~	*****	~~43-341~~	*****	~~YES~~	~~CLOSED~~	******	*****	***	******	~~2400.00~~	~~NO~~	*******	~~0~~
X102	*****	******	*****	***	*****	******	*****	***	******	******	*****	***	******	******	***	*******	*
X103	*****	******	*****	***	*****	******	*****	***	******	******	*****	***	******	******	***	*******	*
X104	*****	******	*****	***	*****	******	*****	***	******	******	*****	***	******	******	***	*******	*
X105	MK033	******	*****	NO	*****	43-325	~~*****~~ B	YES	CLOSED	******	*****	***	******	2400.00	NO	*******	0
X106	MK048	43-310	B	YES	CLOSED	43-309	B	YES	CLOSED	******	*****	***	******	2400.00	NO	*******	0
X107	MK038	74-002	B	YES	AS IS	******	*****	***	******	******	*****	***	******	2400.00	YES	*******	1
X108	AS108	87-562	*****	NO	*****	******	*****	***	******	******	*****	***	******	0.50	NO	ANNULUS	1
X109	AS109	87-563	*****	NO	*****	******	*****	***	******	******	*****	***	******	0.50	NO	ANNULUS	1
X110	MK032	87-7	A	YES	CLOSED	******	*****	***	******	87-9	B	YES	CLOSED	0.0833	NO	*******	0
X111	*****	******	*****	***	******	******	*****	***	******	******	*****	***	******	******	***	*******	*
X112	*****	******	*****	***	******	******	*****	***	******	******	*****	***	******	******	***	*******	*
X113	*****	******	*****	***	******	******	*****	***	******	******	*****	***	******	******	***	*******	*
X114	MK110	61-122	B	YES	CLOSED	******	*****	***	******	61-110	A	YES	CLOSED	0.0833	YES	AUX BLDG	0
X115	MK111	61-097	B	YES	CLOSED	******	*****	***	******	61-096	A	YES	CLOSED	0.0833	YES	AUX BLDG	0
X116	MK007	******	*****	***	******	******	*****	***	******	******	*****	***	******	******	***	*******	*
X117	MK008	******	*****	***	******	******	*****	***	******	******	*****	***	******	******	NO	*******	0
X118	MK018	******	*****	***	******	******	*****	***	******	******	*****	***	******	******	NO	*******	0
X119	*****	******	*****	***	******	******	*****	***	******	******	*****	***	******	******	***	*******	*
X120	*****	******	*****	***	******	******	*****	***	******	******	*****	***	******	******	***	*******	*

43-N0002

TABLE 6.2.4-1 (Continued)

WATTS BAR NUCLEAR PLANT PRIMARY CONTAINMENT AND SHIELD BUILDING PENETRATION ISOLATION SYSTEM DATA

SORTED BY: CONTAINMENT PENETRATION NUMBER

PENETRATION IDENTIF. PRIM CONT	SHIELD BLDG	PROCESS FLUID	PROCESS FLUID STATE	TVA PENE TYPE	TVA CONT ISOL CLASS	POSSI-BLE LEAK PATHS	APPENDIX J TYPE C TEST FLUID	IN PRIM CONT (PIPE DIA)	IN ANNULUS (PIPE DIA)	OUTSIDE SHIELD BLDG (PIPE DIA)
X001	******	AIR	COLD	14	I	AB	******	0.1	*****	*****
X002A	******	AIR	COLD	15	I	A D	******	0.5	1.1	*****
X002B	******	AIR	COLD	15	I	A D	******	0.5	1.1	*****
X003	MK062	WATER	COLD	16	I	AB D	******	2.1	*****	10.1
X004	F005	AIR	COLD	13	I	ABC E	AIR	0.8	7.0	*****
X005	F005	AIR	COLD	13	I	ABC E	AIR	0.5	0.5	*****
X006	F005	AIR	COLD	13	I	ABC E	AIR	0.1	4.5	*****
X007	F005	AIR	COLD	13	I	ABC E	AIR	0.1	4.5	*****
X008	******	*****	****	**	*	*****	******	*****	*****	*****
X008A	MK112	WATER	HOT	20	III	BCE	******	*****	*****	*****
X008B	MK113	WATER	HOT	20	III	BCE	******	*****	*****	*****
X008C	MK114	WATER	HOT	20	III	BCE	******	*****	*****	*****
X008D	MK115	WATER	HOT	20	III	BCE	******	*****	*****	*****
X009A	F002	AIR	COLD	13	I	ABC E	AIR	0.2	0.3	*****
X009B	F002	AIR	COLD	13	I	ABC E	AIR	0.2	0.3	*****
X010A	F002	AIR	COLD	13	I	ABC E	AIR	0.3	2.3	*****
X010B	F002	AIR	COLD	13	I	ABC E	AIR	0.4	2.3	*****
X011	F002	AIR	COLD	13	I	ABC E	AIR	0.2	0.5	*****
X012A	MK067	WATER	HOT	2	III	BC E	******	*****	*****	*****
X012B	MK068	WATER	HOT	2	III	BC E	******	*****	*****	*****
X012C	MK069	WATER	HOT	2	III	BC E	******	*****	*****	*****
X012D	MK070	WATER	HOT	2	III	BC E	******	*****	*****	*****
X013A	MK063	STEAM	HOT	1	III	BC E	******	*****	*****	*****
X013B	MK064	STEAM	HOT	1	III	BC E	******	*****	*****	*****
X013C	MK065	STEAM	HOT	1	III	BC E	******	*****	*****	*****
X013D	MK066	STEAM	HOT	1	III	BC E	******	*****	*****	*****
X014A	AS014A	WATER	HOT	4	III	B E	******	20.0	*****	156.0
X014B	AS014B	WATER	HOT	4	III	B E	******	20.0	*****	120.0
X014C	AS014C	WATER	HOT	4	III	B E	******	20.0	*****	120.0
X014D	AS014D	WATER	HOT	4	III	B E	******	20.0	*****	156.0
X015	AS015	WATER	HOT	4	I	B D	AIR	774.0	*****	10.0
X016	MK019	WATER	COLD	7	~~I~~ II	A D	******	4.0	*****	18.0
X017	MK027	WATER	COLD	3	IV	B D	******	12.8	*****	0.0
X018	******	*****	****	**	*	*****	******	*****	*****	****
X019A	******	WATER	HOT	12	IV	D	******	*****	*****	19.3
X019B	******	WATER	HOT	12	IV	D	******	*****	*****	19.3
X020A	AS020A	WATER	COLD	5	IV	B D	******	0.0	*****	*****
X020B	AS020B	WATER	COLD	5	IV	B D	******	0.0	*****	*****
X021	AS021	WATER	COLD	5	IV	B D	******	0.0	*****	*****
X022	AS022	WATER	COLD	5	IV	B D	******	0.0	*****	*****

52

TABLE 6.2.4-1 (Continued)

WATTS BAR NUCLEAR PLANT PRIMARY CONTAINMENT AND SHIELD BUILDING PENETRATION ISOLATION SYSTEM DATA

SORTED BY: CONTAINMENT PENETRATION NUMBER

PENETRATION IDENTIF. PRIM CONT	SHIELD BLDG	PROCESS FLUID	PROCESS FLUID STATE	TVA PENE TYPE	TVA CONT ISOL CLASS	POSSI-BLE LEAK PATHS	APPENDIX J TYPE C TEST FLUID	IN PRIM CONT (PIPE DIA)	IN ANNULUS (PIPE DIA)	OUTSIDE SHIELD BLDG (PIPE DIA)
X023	MK061	AIR	COLD	4	IV	AB D	AIR	*****	*****	*****
X024	AS024	WATER	HOT	5	IV	B D	******	0.0	*****	195.0
X025A	MK044M	WATER	HOT	10	I	AB D	AIR	0.0	0.0	*****
X025B	******	AIR	****	10	*	B	******	*****	*****	*****
X025C	******	AIR	****	10	*	B	******	*****	*****	*****
X025D	MK044M	STEAM	HOT	10	I	AB D	AIR	0.0	0.0	*****
X026A	MK045M	AIR	COLD	10	I	B	AIR	16.0	29.0	*****
X026B	MK045M	AIR	COLD	10	I	B	AIR	16.0	29.0	*****
X026C	******	AIR	****	10	*	B	******	*****	*****	*****
X027A	MK046M	WATER	HOT	10	II	AB D	AIR	0.0	0.0	*****
X027B	MK046M	WATER	HOT	10	II	AB D	AIR	*****	*****	*****
X027C	MK046M	WATER	HOT	10	II	AB D	AIR	*****	*****	*****
X027D	MK046M	WATER	HOT	10	II	AB D	AIR	*****	*****	*****
→ X028	MK034	WATER	COLD	← 10	IV	AB D	AIR	*****	*****	*****
X029	MK050	WATER	COLD	21	I	A D	AIR	1.5	*****	40.0
X030	AS030	WATER	COLD	4	II	B D	AIR	0.0	*****	0.0
X031	MK049	WATER	COLD	**	*	AB D	AIR	*****	*****	*****
X032	AS032	WATER	COLD	5	IV	B D	*****	0.0	*****	*****
X033	AS033	WATER	COLD	5	IV	B D	*****	0.0	*****	*****
X034	MK043	AIR	COLD	6	II	AB D	AIR	0.0	0.0	*****
X035	MK042	WATER	COLD	21	II	A D	AIR	*****	*****	51.0
X036	MK020	AIR	COLD	**	*	AB	*****	*****	*****	*****
X037	MK014	AIR	COLD	**	*	AB	*****	*****	*****	*****
X038	MK013	*****	****	**	*	****	*****	*****	*****	*****
X039A	MK055M	N2	COLD	22	I	A D	AIR	0.0	*****	0.0
X039B	MK055M	N2	COLD	22	I	A D	AIR	0.0	*****	0.0
X039C	MK055M	*****	****	22	*	****	*****	*****	*****	*****
X039D	MK055M	*****	****	22	*	****	*****	*****	*****	*****
X040A	MK009	WATER	COLD	8	IV	BC E	*****	*****	*****	*****
X040B	MK011	WATER	COLD	8	IV	BC E	*****	*****	*****	*****
X040C	MK010	*****	****	**	*	****	*****	*****	*****	*****
X040D	MK012	AIR	COLD	**	I	A D	AIR	*****	*****	*****
X041	MK047	WATER	COLD	6	I	A D	AIR	3.7	*****	18.0
X042	MK039	WATER	COLD	7	I	AB D	AIR	0.0	*****	0.0
X043A	MK031	WATER	COLD	6	II	A D	*****	744.0	*****	*****
X043B	MK029	WATER	COLD	6	II	A D	*****	1212.0	*****	*****
X043C	MK028	WATER	COLD	6	II	A D	*****	1746.0	*****	*****
X043D	MK030	WATER	COLD	7	II	A D	*****	300.0	*****	*****
X044	MK037	WATER	COLD	4	I	B D	AIR	5.0	*****	24.0
X045	AS045	N2	COLD				AIR	0.0	*****	0.0

452

TABLE 6.2.4-1 (Continued)

WATTS BAR NUCLEAR PLANT PRIMARY CONTAINMENT AND SHIELD BUILDING PENETRATION ISOLATION SYSTEM DATA

SORTED BY: CONTAINMENT PENETRATION NUMBER

PENETRATION IDENTIF. PRIM CONT	SHIELD BLDG	PROCESS FLUID	PROCESS FLUID STATE	TVA PENE TYPE	TVA CONT ISOL CLASS	POSSI-BLE LEAK PATHS	APPENDIX J TYPE C TEST FLUID	IN PRIM CONT (PIPE DIA)	IN ANNULUS (PIPE DIA)	OUTSIDE SHIELD BLDG (PIPE DIA)
X074	MK085	WATER	COLD	21	I	AB DE	AIR	978.0	84.0	*****
X075	MK083	WATER	COLD	21	I	AB DE	AIR	642.0	48.0	*****
X076	MK097	AIR	COLD	21	I	A D	AIR	34.0	*****	137.0
X077	MK096	WATER	COLD	6	I	A D	AIR	35.0	*****	145.0
X078	MK098	WATER	COLD	**	*	AB D	AIR	*****	*****	*****
X079A	MK023	ICE	COLD	18	I	AB	*****	1.0	*****	17.0
X079B	MK024	ICE	COLD	18	I	AB	*****	1.0	*****	17.0
X080	MK071	AIR	COLD	13	I	ABC E	AIR	0.5	0.8	*****
X081	AS081	AIR	COLD	4	I	A D	AIR	0.0	*****	0.0
X082	MK094	WATER	COLD	7	I	AB D	AIR	0.0	*****	17.2
X083	MK095	WATER	COLD	7	I	AB D	AIR	0.0	*****	22.8
X084A	MK099M	N2	COLD	10	I	AB D	AIR	0.0	0.0	*****
X084B	MK101	WATER	COLD	10	*	B D	*****	*****	*****	*****
X084C	MK101	WATER	COLD	10	*	B D	*****	*****	*****	*****
X084D	MK101	WATER	COLD	10	*	B D	*****	*****	*****	*****
X085A	MK100M	WATER	HOT	10	I	AB D	AIR	0.0	0.0	*****
X085B	MK100M	WATER	HOT	10	I	AB D	AIR	0.0	0.0	*****
X085C	******	AIR	COLD	10	*	B	*****	*****	*****	*****
X085D	MK100M	*****	****	10	*	****	*****	*****	*****	*****
X086A	MK061	AIR	COLD	10	IV	AB D	AIR	*****	*****	*****
X086B	MK033	AIR	COLD	10	IV	AB D	AIR	*****	*****	*****
X086C	~~MK054~~ STET	~~WATER~~ STET	COLD	10	IV	AB D	AIR	*****	*****	*****
X086D	MK101M	*****	****	10	*	****	*****	*****	*****	*****
X087A	~~MK048~~ 102	~~WATER~~	****	10	*	~~AB D~~	~~AIR~~	*****	*****	*****
X087B	MK102	WATER	COLD	10	*	B D	*****	*****	*****	*****
X087C	MK102	WATER	COLD	10	*	B D	*****	*****	*****	*****
X087D	MK102	WATER	COLD	10	*	B D	*****	*****	*****	*****
X088	MK103	*****	****	**	*	****	*****	*****	*****	*****
X089	MK104	*****	****	**	*	****	*****	*****	*****	*****
X090	MK105	AIR	COLD	6	I	AB D	AIR	0.0	0.0	*****
X091	MK056	AIR	COLD	6	I	AB D	AIR	*****	*****	*****
X092A	*****	AIR	COLD	10	IV	B	AIR	*****	*****	*****
X092B	*****	AIR	COLD	10	IV	B	AIR	*****	*****	*****
X092C	MK034	WATER	HOT	10	IV	AB D	AIR	*****	*****	*****
X092D	*****	*****	****	10	*	****	*****	*****	*****	*****
X093	MK058	WATER	COLD	10	I	AB D	AIR	0.0	0.0	*****
X094A	MK059M	AIR	COLD	10	I	AB D	AIR	0.0	0.0	*****
X094B	MK059M	AIR	COLD	10	I	AB D	AIR	0.0	0.0	*****
X094C	MK059M	AIR	COLD	10	I	AB D	AIR	0.0	0.0	*****
X095A	MK060M	AIR	COLD	10	I	AB D	AIR	0.0	0.0	*****

TABLE 6.2.4-1 (Continued)

WATTS BAR NUCLEAR PLANT PRIMARY CONTAINMENT AND SHIELD BUILDING PENETRATION ISOLATION SYSTEM DATA

SORTED BY: CONTAINMENT PENETRATION NUMBER

PENETRATION IDENTIF. PRIM CONT	SHIELD BLDG	PROCESS FLUID	PROCESS FLUID STATE	TVA PENE TYPE	TVA CONT ISOL CLASS	POSSIBLE LEAK PATHS	APPENDIX J TYPE C TEST FLUID	IN PRIM CONT (PIPE DIA)	IN ANNULUS (PIPE DIA)	OUTSIDE SHIELD BLDG (PIPE DIA)
X095B	MK060M	AIR	COLD	10	I	AB D	AIR	0.0	0.0	*****
X095C	MK060M	AIR	COLD	10	I	AB D	AIR	0.0	0.0	*****
X096A	*****	AIR	COLD	10	*	B	*****	*****	*****	*****
X096B	MK106M	AIR	COLD	10	I	B	AIR	16.0	29.0	*****
X096C	MK106M	AIR	COLD	10	I	B	AIR	16.0	29.0	*****
X097	*****	AIR	COLD	6	II	B	AIR	*****	*****	*****
X098	MK108	*****	****	6	*	****	*****	*****	*****	*****
X099	*****	AIR	COLD	6	IV	B	AIR	*****	*****	*****
X100	*****	AIR	COLD	6	IV	B	AIR	*****	*****	*****
X101	MK054	*****	****	**	*	~~AB D***~~	~~AIR ***~~	*****	*****	*****
X102	*****	*****	****	**	*	****	*****	*****	*****	*****
X103	*****	*****	****	**	*	****	*****	*****	*****	*****
X104	*****	*****	****	**	*	****	*****	*****	*****	*****
X105	MK033	AIR	COLD	→ 10	IV	AB D	AIR	*****	*****	*****
X106	MK048	WATER	HOT	→ 10	IV	AB D	AIR	*****	*****	*****
X107	MK038	WATER	HOT	3	IV	B D	*****	91.0	*****	*****
X108	AS108	WATER	COLD	24	IV	B D	*****	0.0	0.0	0.0
X109	AS109	WATER	COLD	24	IV	B D	*****	0.0	0.0	0.0
X110	MK032	WATER	COLD	**	I	A D	AIR	*****	0.0	*****
X111	*****	*****	****	**	*	****	*****	*****	*****	*****
X112	*****	*****	****	**	*	****	*****	*****	*****	*****
X113	*****	*****	****	**	*	****	*****	*****	*****	*****
X114	MK110	GLYCOL	COLD	23	I	AB D	AIR	51.0	*****	56.0
X115	MK111	GLYCOL	COLD	23	I	AB D	AIR	51.0	*****	56.0
X116	MK007	*****	****	**	*	****	*****	*****	*****	*****
X117	MK008	AIR	COLD	18	I	BC	*****	*****	*****	*****
X118	MK018	WATER	COLD	18	I	ABC	*****	*****	0.0	0.0
X119	*****	*****	****	**	*	****	*****	*****	*****	*****
X120	*****	*****	****	**	*	****	*****	*****	*****	*****

TABLE 6.2.4-1 (Continued)

PENETRATION IDENTIFICATION PRIM. CONT.	SHIELD BLDG.	SYSTEM NO(S).	CONTAINMENT ISOLATION VALVE ARRANGE. FIGURE NO.	ESSENTIAL OR NONESSENTIAL	TVA DRAWING NO(S).
X075	MK083	67	6.2.4-22H	N	47W845-3
X076	MK097	33	6.2.4-22D	N	47W846-2
X077	MK096	59	6.2.4-22U	N	47W856-1
X078	MK098	26	6.2.4-22C	N	47W850-9
X079A	MK023	61	6.2.4-22BB	N	47W814-1
X079B	MK024	61	6.2.4-22BB	N	47W814-1
X080	MK071	30	6.2.4-22W	N	47W866-1
X081	AS081	77	6.2.4-22L	N	47W830-1
X082	MK094	78	6.2.4-22T	N	47W855-1
X083	MK095	78	6.2.4-22T	N	47W855-1
X084A	MK099M	43	6.2.4-22AA	N	47W625-8
X084B	******	30	6.2.4-22II	E	47W600-89
X084C	MK101	68	6.2.4-22II	E	47W600-292
X084D	MK101	68	6.2.4-22II	E	47W600-292
X085A	MK100M	43	6.2.4-22BB	N	47W625-7
X085B	MK100M	43	6.2.4-22AA	N	47W625-1
X085C	******	30	6.2.4-22CC	E	47W600-89
X085D	MK100M	**	**********	*	*********
X086A	MK061	43	6.2.4-22HH	E	47W625-15
X086B	MK033	43	6.2.4-22HH	E	47W625-15
X086C	MK054	43	6.2.4-22GG	E	47W625-15
X086D	MK100M	**	**********	*	*********
X087A	~~MK048~~ MK102	~~43~~ **	~~6.2.4-22GG~~ *******	E	~~47W625-15~~ ********
X087B	MK102	68	6.2.4-22II	E	47W600-292
X087C	MK102	68	6.2.4-22II	E	47W600-292
X087D	MK102	68	6.2.4-22II	E	47W600-292
X088	MK103	**	**********	*	*********
X089	MK104	**	**********	*	*********
X090	MK105	32	6.2.4-22I	N	47W848-1
X091	MK056	32	6.2.4-22I	N	47W848-1
X092A	******	43	6.2.4-22DD	E	47W625-11
X092B	******	43	6.2.4-22DD	E	47W625-11
X092C	MK034	43	6.2.4-22GG	E	47W625-15
X092D	******	**	**********	*	*********
X093	MK058	43	6.2.4-22CC	N	47W625-2
X094A	MK059M	90	6.2.4-220	N	47W600-105
X094B	MK059M	90	6.2.4-220	N	47W600-105
X094C	MK059M	90	6.2.4-220	N	47W600-105
X095A	MK060M	90	6.2.4-220	N	47W600-105
X095B	MK060M	90	6.2.4-220	N	47W600-105

TABLE 6.2.4-1 (Continued)

PENETRATION IDENTIFICATION PRIM. CONT.	SHIELD BLDG.	SYSTEM NO(S).	CONTAINMENT ISOLATION VALVE ARRANGE. FIGURE NO.	ESSENTIAL OR NONESSENTIAL	TVA DRAWING NO(S).
X095C	MK060M	90	6.2.4-22O	N	47W600-105
X096A	******	30	6.2.4-22CC	E	47W600-89
X096B	MK106M	52	6.2.4-22R	N	47W331-3
X096C	MK106M	52	6.2.4-22R	N	47W331-3
X097	******	30	6.2.4-22EE	N	47W866-1
X098	MK108	**	*********	*	*********
X099	******	43	6.2.4-22DD	E	47W625-11
X100	******	43	6.2.4-22DD	E	47W625-11
X101	MK054	~~43~~ **	~~6.2.4-22GG~~ ******	~~E~~ *	~~47W625-15~~ *****
X102	******	**	*********	*	*********
X103	******	**	*********	*	*********
X104	******	**	*********	*	*********
X105	MK033	43	6.2.4-22HH	E	47W625-15
X106	MK048	43	6.2.4-22GG	E	47W625-15
X107	MK038	74	6.2.4-22X	E	47W810-1
X108	AS108	87	6.2.4-22N	E	47W811-2
X109	AS109	87	6.2.4-22N	E	47W811-2
X110	MK032	87	6.2.4-22V	N	47W811-2
X111	******	**	*********	*	*********
X112	******	**	*********	*	*********
X113	******	**	*********	*	*********
X114	MK110	61	6.2.4-22Y	N	47W814-2
X115	MK111	61	6.2.4-22Y	N	47W814-2
X116	MK007	**	*********	*	*********
X117	MK008	**	6.2.4-22FF	N	47W301-1
X118	MK018	41	6.2.4-22EE	N	72-4333-318
X119	******	**	*********	*	*********
X120	******	**	*********	*	*********

instrument is also provided in the Main Control Room control panel for monitoring temperatures in the recombiner. To control the recombination process, the correct power input to bring the recombiner above the threshold temperature for recombination is set on the controller. The controller setting is accomplished at the control panel, and power input is monitored by a wattmeter. This predetermined power setting covers variation in containment temperature, pressure, and hydrogen concentration in the post-loss-of-coolant accident environment.

The applicable codes used in the design of the combustible gas control system and its components are given in Sections 3.2 and 3.11.

Results of testing a prototype of the electric hydrogen recombiner are given in WCAP-7820, Supplement 1, "Electrical Hydrogen Recombiner for Water Reactor Containments," dated May 1972.

The basic design parameters for the electric hydrogen recombiners are given in Table 6.2.5-1. 55

The sampling system consists of a 3/8" sampling line beginning in the upper compartment and penetrating primary containment to connect to the hydrogen analyzer system. This line is equipped with a normally closed, air operated, remote manually controlled, isolation valve. Upon actuation of the system the containment atmosphere is drawn through a series of sample conditioners including a trap, moisture separator, and filter prior to entering the analyzer. The sample is returned to primary containment via a 3/8" line. The return line is also equipped with a remote manually controlled isolation valve, normally closed. The analyzer is designed to operate under the conditions of pressure, temperature, humidity and radiation associated with a LOCA. The analyzer is calibrated to measure hydrogen concentrations between zero and ten percent with an indicated accuracy in the main control room of ± 35/100 of one percent. Remote indication and control are provided in the Main Control Room. The sampling system including lines is completely redundant and independent. A functional block diagram of the containment gas monitor subsystem is shown on Figure 6.2.5-6. 55 55

The design of the sampling system is seismic Category I, and conforms to ASME Section III, Class 2, and Section IX requirements; ANSI B16.5, B16.11, B31.1, N45.2, and B46.1 requirements; and the applicable requirements of the ASTM, IEEE, etc.

A failure mode and effects analysis of the hydrogen monitoring system is given in Table 6.2.5-2. Both the electric hydrogen recombiners and the hydrogen purge systems are manually operated (no special plant protection system signals are required to actuate either system). The recombiner system will be manually actuated when the hydrogen concentration has reached a level of ~~8~~ 2.6 40

TABLE 6.3-10

ECCS ACTIVE VALVES

TVA Valve No. #	W Valve No. #	Normal Position	Cold Leg Injection (After πSπ Signal)	Recirculation Cold Leg	Recirculation Hot Leg	Normal Shutdown	RHR Containment Spray
FCV-68-307	8025	Closed	Closed	Closed	Closed	Closed	Closed
FCV-81-12	8028	Closed	Closed	Closed	Closed	Closed	Closed
FCV-62-72	8149A	Closed (1)	Closed	Closed	Closed	Open	Closed
FCV-62-73	8149B	Open (1)	Closed	Closed	Closed	Open	Closed
FCV-62-74	8149C	Closed (1)	Closed	Closed	Closed	Open	Closed
FCV-74-16	HCV-606	Open	Open	Open	Open	Open	Open
FCV-74-28	HCV-607	Open	Open	Open	Open	Open	Open
FCV-63-118, 98 80, 67	MOV 8808A B, C, D	Open	Open	Closed	Closed	Closed	Open
FCV-63-71	8871	Closed	Closed	Closed	Closed	Closed	Closed
FCV-63-64	8880	Closed	Closed	Closed	Closed	Closed	Closed
FCV-63-84	8964	Closed	Closed	Closed	Closed	Closed	Closed
FCV-63-47, 48	MOV 8923A, B	Open	Open	Open	Open	Open	Open
FCV-63-23	8888	Closed	Closed	Closed	Closed	Closed	Closed
FCV-74-3, 21	MOV 8700A, B	Open	Open	Closed	Closed	Open	Closed
FCV-74-33	MOV 8716A	Open	Open	Closed	Open	Open	Closed
FCV-74-35	MOV 8716B	Open	Open	Closed	Open	Open	Closed
FCV-63-8, 11	MOV 8804A, B	Closed	Closed	Open	Open	Closed	Open
FCV-63-5	MOV 8806	Open	Open	Closed	Closed	Open	Closed
FCV-63-72, 73	MOV 8811A, B	Closed	Closed	Open	Open	Closed	Open
FCV-63-1	MOV 8812	Open	Open	Cloed	Closed	Closed	Closed
FCV-63-3	MOV 8813	Open	Open	Closed	Closed	Open	Closed
FCV-63-4	MOV 8814	Open	Open	Closed	Closed	Open	Closed
FCV-63-175	MOV 8920	Open	Open	Closed	Closed	Open	Closed
FCV-63-7, 6	MOV 8807A, B	Closed	Closed	Open	Open	Closed	Open
FCV-62-135, 136	MOV LCV-112D, E	Closed	Open	Closed	Closed	Closed	Closed
FCV-68-308	8026	Open	Closed	Closed	Closed	Open	Closed
FCV-68-305	8033	Open	Closed	Closed	Closed	Open	Closed
FCV-62-132, 133	MOV LCV-112B, C	Open	Closed	Closed	Closed	Open	Closed
FCV-62-63	MOV 8100	Open	Closed	Closed	Closed	Open	Closed
FCV-62-61	MOV 8112	Open	Closed	Closed	Closed	Open	Closed
FCV-62-90	MOV 8105	Open	Closed	Closed	Closed	Open	Closed
FCV-62-91	MOV 8106	Open	Closed	Closed	Closed	Open	Closed
FCV-62-98	MOV 8110	Open	Open	Open	Open	Open	Open
FCV-62-99	MOV 8111	Open	Open	Open	Open	Open	Open
FCV-62-77	8152	Open	Closed	Closed	Closed	Open	Closed
FCV-63-26, 25	MOV 8801A, B	Closed	Open	Open	Open	Closed	Open
~~FCV-63-39, 40~~	~~MOV 8803A, B~~	~~Closed~~	~~Open~~	~~Open~~	~~Open~~	~~Closed~~	~~Open~~
~~FCV-63-42, 41~~	~~8876A, B~~	~~Open~~	~~Closed~~	~~Closed~~	~~Closed~~	~~Open~~	~~Closed~~
~~FCV-63-38~~	~~8863~~	~~Open~~	~~Closed~~	~~Closed~~	~~Closed~~	~~Open~~	~~Closed~~

~~(1)~~ May be open or closed during normal operation.

Revised by Amendment 55

to function to achieve the system responses assumed in the safety evaluations and those needed to shut down the plant are given in this section. Safety related systems are identified in Table 1.7-1 and Table 7.1-2 and compared to similar operating plants in Section 1.3. 37 38

7.1.1.1.1 Reactor Trip System

The Reactor Trip System is a functionally defined system described in Section 7.2. The equipment which provides the trip functions is identified and discussed in Section 7.2. Design bases for the Reactor Trip System are given in Section 7.1.2.1. Figure 7.1-1 includes a single line diagram of this system.

7.1.1.1.2 Engineered Safety Features Actuation System

The Engineered Safety Features Actuation System is a functionally defined system described in Section 7.3. The equipment which provides the actuation functions is identified and discussed in Section 7.3. Design bases for the Engineered Safety Features Actuation System are given in Section 7.1.2.1.

7.1.1.1.3 Vital Instrumentation and Control Power Supply System

Design bases for the Vital Control Power Supply System are given in Section 7.1.2.1. Further description of the system is provided in Section 8.3.

7.1.1.1.4 Auxiliary Control Air System

The Auxiliary Control Air System supplies essential control air to safety-related items such as the auxiliary feedwater control valves; dampers in the Auxiliary Building Gas Treatment System; the Emergency Gas Treatment System; and the Control Building HVAC System. Further description of the system is given in Section 9.3.1.

7.1.1.2 Safety-Related Display Instrumentation

The Post Accident Monitoring System (PAM) provides essential information required by the operator to diagnose and monitor significant accident conditions. The accident-monitoring instrumentation is designed with redundant channels so that a single failure does not prevent the operator from determining the nature of an accident, the functioning of the engineered safety features, the need for operator action, and the response of the plant to the safety measures in operation. This system is described in Section 7.5.

All other safety-related display instrumentation is discussed in Section 7.5.

The ~~Status Monitoring System (SMS)~~ Bypassed and Inoperable Status Indication System (BISI) does not perform a safety function, nor do administrative procedures call for immediate

452

TABLE 7.1-1
WATTS BAR NUCLEAR PLANT
I&C REGULATORY GUIDE CONFORMANCE

The extent to which the recommendations of the applicable NRC regulatory guides and IEEE standards are followed for the Class 1E instrumentation and control systems is shown below. The symbol (F) indicates full compliance. Those which are not fully implemented are discussed in the referenced sections of the FSAR and in the footnotes as indicated.

Regulatory Guide 1.11, "Instrument Lines Penetrating Primary Containment" (F)

Regulatory Guide 1.22, "Periodic Testing of Protection System Actuation Functions" (F, see note 2) 28

Regulatory Guide 1.29, "Seismic Design Classification" (F)

Regulatory Guide 1.30, "Quality Assurance Requirements for the Installation, Inspection, and Testing of Instrumentation and Electric Equipment" (F)

Regulatory Guide 1.40, "Qualification Tests of Continuous Duty Motors Installed Inside the Containment of Water-Cooled Nuclear Power Plants" (F)

Regulatory Guide 1.45, "Reactor Coolant Pressure Boundry Leakage Detection Systems" (F)

Regulatory Guide 1.47, "Bypassed and Inoperable Status Indication for Nuclear Power Plant Safety Systems" (F) SEE NOTE 5)

Regulatory Guide 1.53, "Application of the Single Failure Criterion to Nuclear Power Plant Protection Systems" (F see note 3)

Revised by Amendment 28

452

requirements of Regulatory Guide 1.53. The formal analyses required by the standard have not been documented exactly as outlined although parts of such analyses are published in various documents. Westinghouse has gone beyond the required analyses and has performed a fault tree analysis reference [1].

The referenced Topical Reports provide details of the analyses of the protection systems previously made to show conformance with single failure criterion set forth in Paragraph 4.2 of IEEE Standard 279-1971. The interpretation of single failure criterion provided by IEEE-379 does not indicate substantial differences with the Westinghouse interpretation of the criterion except in the methods used to confirm design reliability. Established design criteria in conjunction with sound engineering practices form the bases for the Westinghouse protection systems. The Reactor Trip and Engineered Safeguards Actuation Systems are each redundant safety systems. The required periodic testing of these systems will disclose any failures or loss of redundancy which could have occurred in the interval between tests, thus ensuring the availability of these systems.

Note 4 <u>Conformance to Regulatory Guide 1.89</u>

Watts Bar Nuclear Power Plant Class IE equipment is qualified in accordance with IEEE 323-1971.

Note 5 <u>Conformance To Regulatory Guide 1.47</u>

The Bypassed and Inoperable Status Indication System will be in full compliance by the first refueling outage.

b. Reactor coolant pump undervoltage trip

This trip is required in order to protect against low flow which can result from loss of voltage to more than one reactor coolant pump motor (e.g. from plant loss of voltage or reactor coolant pump breakers opening). 44

There is one undervoltage sensing relay connected for each pump motor connected at the load side of each reactor coolant pump breaker. These relays provide an output signal when the pump voltage goes below approximately 70 percent of rated voltage. Signals from these relays are time delayed to prevent spurious trips caused by short term voltage perturbations. The coincidence logic and interlocks are given in Table 7.2-1. 44

c. Reactor coolant pump underfrequency trip

There is no safety related requirement for a direct trip of the RCP's for underfrequency. Credit is taken for reactor trip on underfrequency in the loss of flow accident. The reactor is tripped for an underfrequency on more than one reactor coolant pump motor (e.g. from a decay in grid frequency).

There is one underfrequency sensing relay for each pump motor connected at the load side of each reactor coolant pump breaker. These relays provide an output signal when the pump frequency decays to approximately ~~56~~ 57 Hz. Signals from these relays are time delayed to prevent spurious trips caused by short term frequency perturbations. The coincidence logic and interlocks are given in Table 7.2.-1.

The RCP breakers are not qualified to the criteria applicable to equipment performing a safety function. 44

The basis for not having qualified breakers is that the tripping of RCP's is not a safety function. Westinghouse topical report WCAP-8424 - 'An Evaluation of Loss of Flow Accidents Caused by Power System Frequency Transients in Westinghouse PWR's' states in part that '. . . Westinghouse reactors are adequately protected for frequency of decay rates up to 5 Hz/sec. without taking credit for the RCP power supply breaker trip. . .' A TVA study performed in 1977 and described below determined the maximum system frequency decay rate to be less than 5 Hz/sec.

The Watts Bar Nuclear units are connected into the 500-kV bulk power transmission system as integral parts of TVA's total installed generating capacity. System loads are served 39

The motor-operated bypass valves are located in bypass lines paralleling the normal RHR suction flowpath through series isolation valves FCV-74-1 and FCV-74-2. Valves FCV-74-8 and FCV-74-9 are normally closed and remain closed with power locked out unless one of the two main isolation valves (FCV-74-1 or FCV-74-2) cannot be opened and the plant must be cooled down. Then, the redundant flowpath through one or the other of these bypass valves is used to provide for one trains worth of RHR cooling flow. Valves FCV-74-8 and FCV-74-9 are interlocked with signals from RCS pressure transmitters PT-68-63 and PT-68-64 respectively as shown in Figure 7.6-7. These interlocks prevent inadvertent opening when RCS pressure is above approximately a high setpoint and would automatically close the valves at a higher setpoint. The letdown bypass valves are alarmed on the plant computer with an audible alarm and an automatic printout in the MCR if either of the valves is not in its fully closed position. 44 52 49

7.6.2.2 Analysis

Based on the scope definitions presented in Reference 2 (IEEE 279-1971) and Reference 3 (IEEE 338-1971), it is considered that these criteria do not apply to the Residual Heat Removal Isolation Valve interlocks. However, in order to meet NRC requirements and because of the possible severity of the consequences of loss of function, the requirements of IEEE-279 will be applied with the following comments. 35

1. For the purpose of applying IEEE 279-1971 to this circuit the following definitions will be used.

82

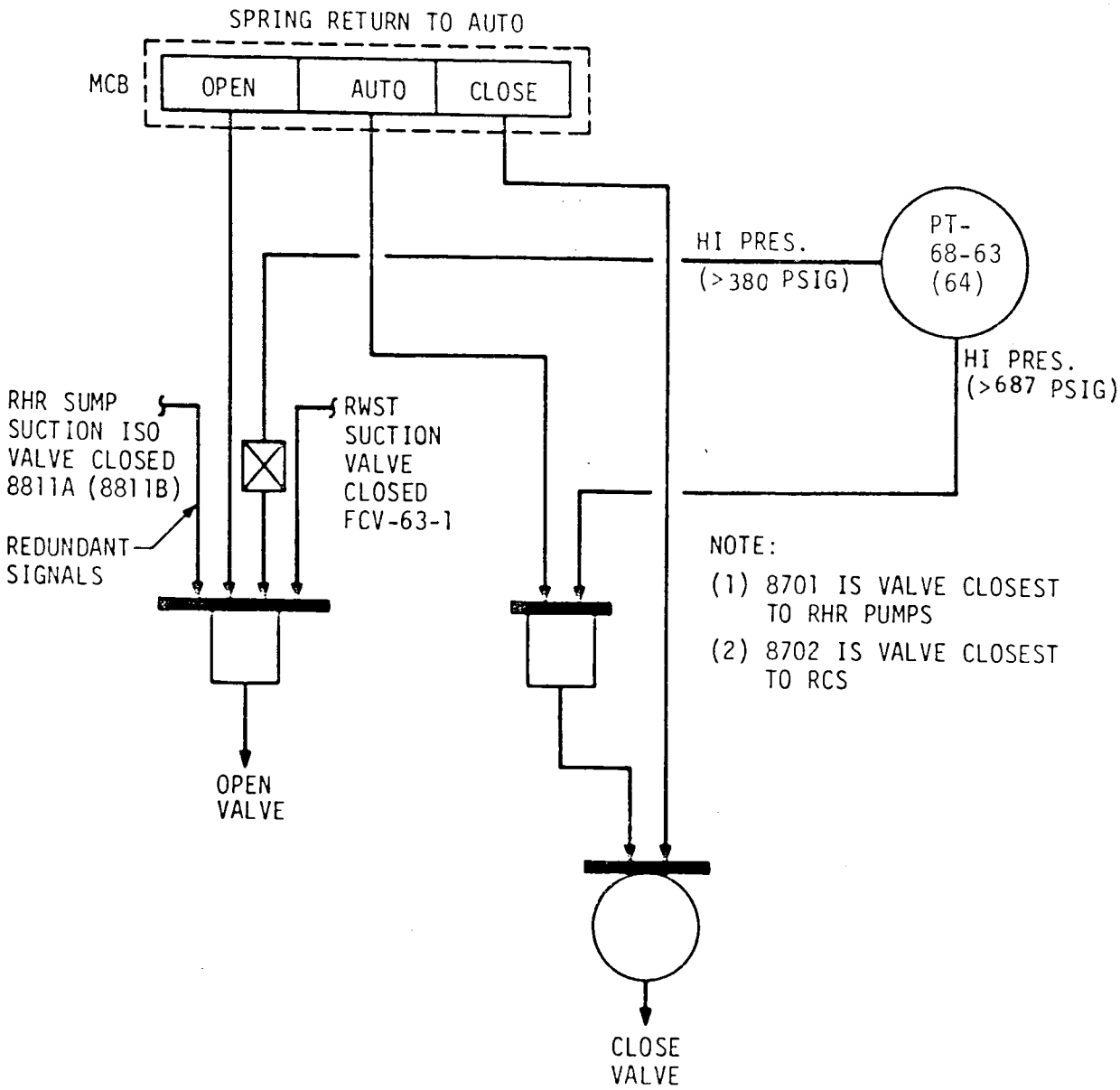

VALVE / INTER-LOCKED WITH	FCV-74-1	FCV-74-2
RWST SUCTION VALVE	FCV-63-1 (TORQUE SWITCH)	FCV-63-1 (TORQUE SWITCH)
RHR SUMP SUCTION ISOLATION VALVE	FCV-63-8 (TORQUE SWITCH)	FCV-63-73 (TORQUE SWITCH)
RCS PRESSURE	PT-68-63	PT-68-64
POWER TRAIN	A	B

revised

WATTS BAR NUCLEAR PLANT
FINAL SAFETY ANALYSIS REPORT

RHR SUCTION ISOLATION VALVE INTERLOCKS
FIGURE 7.6-7. (SHEET 1)

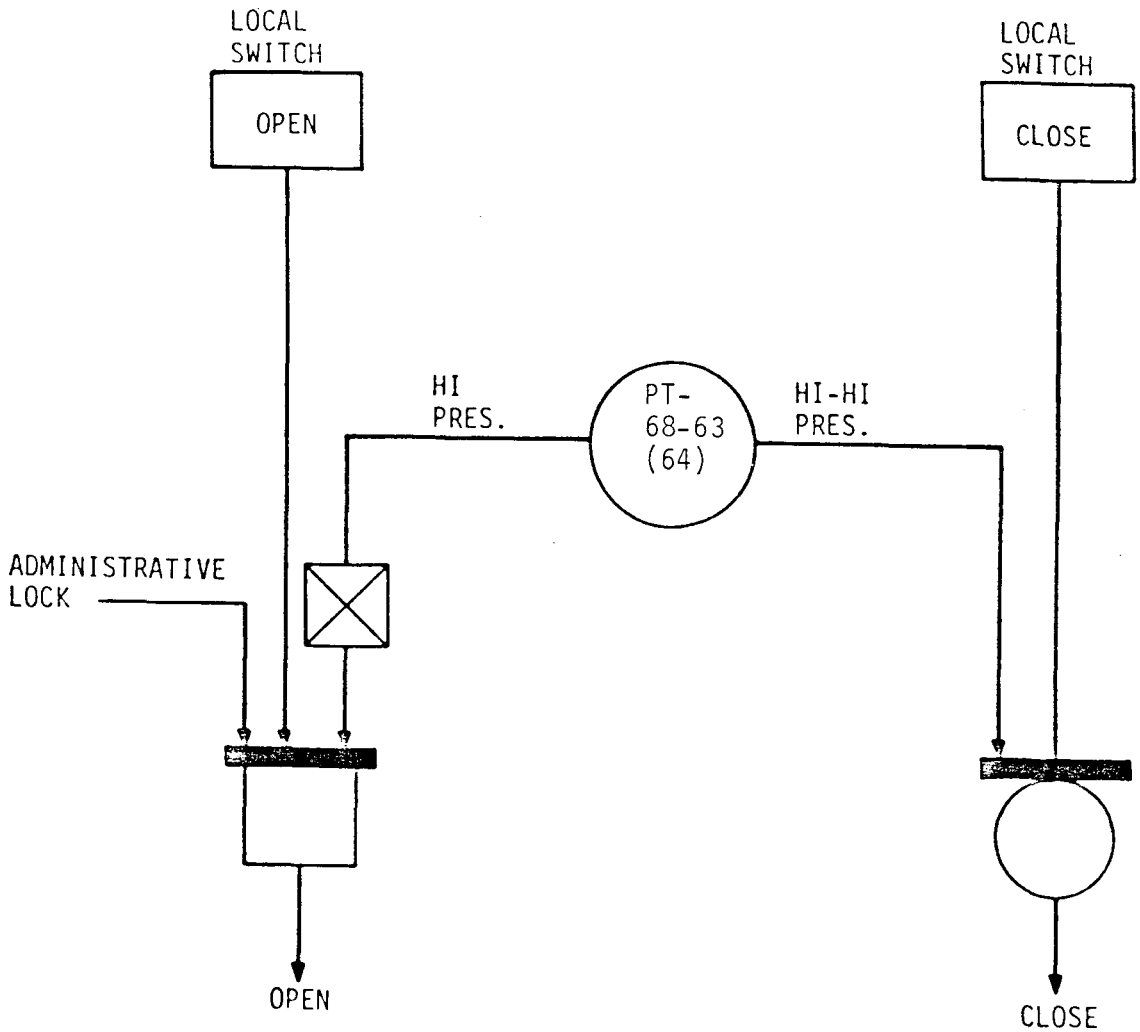

NOTE:

(1) FCV-74-8 IS THE BYPASS VALVE FOR FCV-74-2
(2) FCV-74-9 IS THE BYPASS VALVE FOR FCV-74-1

VALVE / INTER-LOCKED WITH	FCV-74-8	FCV-74-9
RCS PRESSURE	PS-68-63 B/E	PS-68-64 E/B
ADMINISTRATIVE LOCK	✓	✓
POWER TRAIN	A	B

revised

WATTS BAR NUCLEAR PLANT
FINAL SAFETY ANALYSIS REPORT

RHR BYPASS VALVE LOGIC FCV-74-8 (FCV-74-9)
FIGURE 7.6-7. (SHEET 2)

7.7.1.3.6 Bypassed and Inoperable Status Indication System (BISI) ~~Safety System Status Monitoring System~~

~~Description~~ This system will be implemented prior to the first refueling outage of each unit. A description of this system will be provided as soon as the design is finalized for implementation.

The status monitoring system automatically presents the operator in the main control room with a graphic display, and alarm indicating the status of any system which has been deliberately bypassed or deliberately made inoperable which meets all the conditions described in Section C of Regulatory Guide 1.47 and is the result of manipulation of the electrical control system. These conditions are, that the deliberate bypass or deliberately induces inoperative condition: 44 35 31.95

a. renders inoperable any redundant portion of the protection system, systems actuated or controlled by the protection system, and auxiliary or supporting systems that must be operable for the protection system and the systems it actuates to perform their safety-related functions;

b. is expected to occur more frequently than once per year; and

c. is expected to occur when the affected system is normally required to be operable.

Delete

The graphic display consists of a schematic flow diagram of the bypassed or inoperable system(s), with the status of each component to which Section C of Regulatory Guide 1.47 is applicable, clearly indicated, on the face of a cathode ray tube. 44

The operator may interrogate the status monitoring system for the status of components of any of the monitored systems. A schematic flow diagram of the selected monitored system's status will then be displayed on the CRT face. The status of a sufficient number of components indicated in the display can then be compared with the normal control room indicators for these components to verify the operability of the monitoring system.

In accordance with Section D.4 of Regulatory Guide 1.47, the operator has the manual capability to activate any system level alarm in the status monitoring system at the control console.

Each unit is provided with an independent status monitoring system. Systems that are shared by both units will be monitored independently by each unit. 44

The status monitoring system does not perform a safety function, nor do administrative procedures call for immediate operator action based solely on SMS indication. The SMS equipment is isolated from the associated safety-related equipment so as to preclude any abnormal or normal action of the SMS from preventing the performance of a safety function.

452

The status monitoring system consists of a computer, the equipment associated with the computer inputs which determined the state of the components of the monitored plant systems, and the computer output equipment.

The computer inputs consist of signals which reflect the status of monitored system components. The initial signal may be generated by a limit switch, relay contact, or similar device. This digital signal is sent to an isolation device which assures complete independence between the safety-related system being monitored and the status monitoring system. The signal is then sent to a multiplexer which continuously samples the signal, multiplexes it, and transmits the signal to the computer.

The computer processes the incoming signals according to the system status information contained in memory and instructions from the control console.

The computer output consists principally of a graphic display on a cathode ray tube located in the Main Control Room, and a hard copy printer the computer room for a permanent record of system alarms. 35 31.95

The operator control console is located in the Main Control Room. The computer and programmer's station are located in the plant computer room. 44

Delete

452