TENNESSEE VALLEY AUTHORITY
CHATTANOOGA, TENNESSEE 37401
400 Chestnut Street Tower II

January 24, 1984

Director of Nuclear Reactor Regulation
Attention: Ms. E. Adensam, Chief
Licensing Branch No. 4
Division of Licensing
U.S. Nuclear Regulatory Commission
Washington, D.C. 20555

Dear Ms. Adensam:

In the Matter of the Application of	)	Docket Nos. 50-390
Tennessee Valley Authority	)	50-391

Please refer to my letter to you dated November 22, 1983 which transmitted TVA's request for an exemption to NUREG-0737 Item II.F.1 concerning the installation of high-range noble gas monitors on the Auxiliary Building vent at the Watts Bar Nuclear Plant (WBN).

A meeting was held between TVA and NRC representatives on December 20, 1983 at the NRC offices in Bethesda, Maryland, to discuss TVA's exemption requests to NUREG-0737 Item II.F.1. The NRC representatives present at the meeting indicated that sound, plant specific technical bases were presented for not imposing the requirement to install high-range noble gas monitors on the Auxiliary Building vent. Accordingly, the NRC was very receptive to TVA's exemption request on this issue, but indicated that before an exemption could be granted TVA would need to supplement its November 22, 1983 submittal by docketing the details of its meeting presentation. Enclosed is information requested at the December 20, 1983 meeting. Please review this material at the earliest date possible so that we may proceed accordingly.

Please note that TVA also requested that an exemption be granted for not installing high-range noble gas monitors on the steam generator safety and PORV release lines at WBN. This request was also discussed at the December 20, 1983 meeting with the NRC reprsentatives indicating that adequate justifications were not presented for granting an exemption on a plant specific basis. TVA is currently reviewing the NRC's position and discussing the possibility of pursuing this exemption request. We will notify you of TVA's next course of action if we decide to pursue this issue.

8401310017 840124
PDR ADOCK 05000390
A PDR

B001
1/1

Director of Nuclear Reactor Regulation January 24, 1984

If you have any questions concerning this matter, please get in touch with D. B. Ellis at FTS 858-2681.

Very truly yours,

TENNESSEE VALLEY AUTHORITY

L. M. Mills

L. M. Mills, Manager
Nuclear Licensing

Sworn to and subscribed before me
this 24th day of January 1984

Paulette H. White

Notary Public
My Commission Expires 9-5-84

Enclosure
cc: U.S. Nuclear Regulatory Commission (Enclosure)
Region II
Attn: Mr. James P. O'Reilly, Regional Administrator
101 Marietta Street, NW, Suite 2900
Atlanta, Georgia 30303

ENCLOSURE

WATTS BAR NUCLEAR PLANT UNITS 1 AND 2

NUREG-0737 ITEM II.F.1

REQUEST FOR EXEMPTION TO INSTALL HIGH-RANGE NOBLE GAS MONITORS ON THE AUXILIARY BUILDING VENT

The gaseous effluent monitoring system for the Watts Bar Nuclear Plant does not include a high-range monitor for the Auxiliary Building vent, since the release is diverted to the Shield Building vent for design basis accidents. Auxiliary Building vent isolation and operation of the Auxiliary Building Gas Treatment System (ABGTS), an engineered safety feature, provide the required high-range postaccident monitoring capability for the Auxiliary Building postaccident release path.

There is an existing radiation monitor in the Auxiliary Building vent that provides direct indication and recording in the Main Control Room. The monitor has the following range:

Particulate	- 4.7×10^{-11} to 10^{2} Ci/cc
Iodine	- 1.9×10^{-9} to 10^{2} Ci/cc
Gaseous	- 4.0×10^{-7} to 10^{3} Ci/cc

In addition, this monitor provides a signal to automatically initiate secondary containment isolation and ABGTS startup upon detection of high radiation in the vent as described below.

Figure 1 is a general outline of the Watts Bar Nuclear Plant. It shows the location of the Auxiliary Building vent and the Shield Building vents in relation to the plant. The Auxiliary Building vent (figure 2) is isolated and not used following an accident. It is used only during normal operation to exhaust ventilation air from the Auxiliary Building. The Shield Building vent (figure 3) is used during containment purging and postaccident to exhaust filtered air from the secondary containment. Most of the Auxiliary Building, including the Auxiliary Building vent isolation dampers is a part of the secondary containment boundary.

Secondary containment (which includes the Auxiliary Building vent) is automatically isolated and both trains of the ABGTS are automatically placed in service upon receipt of any one of the following signals:

1. Phase A containment isolation (train A or B).
2. High radiation in the fuel handling area (train A or B).
3. High Auxiliary Building inlet air temperature (train A or B).
4. Manual signal from main control room (train A or B).
5. High-radiation signal from the Auxiliary Building vent monitor.

The logic which initiates isolation of the Auxiliary Building and Auxiliary Building vent is shown schematically in figure 4. With the exception of the Auxiliary Building vent radiation monitor channel, the Auxiliary Building isolation and ABGTS start-up signals is initiated by trained, redundant safety-grade instrumentation. The Auxiliary Building vent radiation monitor signal is buffered (a Class 1E isolation device is installed which separates Class 1E equipment from nonClass 1E equipment and prevents any adverse interaction.)

The isolation of the Auxiliary Building vent is accomplished by redundant safety-grade isolation dampers, as shown in figure. Following isolation the ABGTS starts and establishes a reduced pressure region in the Auxiliary Building. Each independent ABGTS train exhausts treated Auxiliary Building air through its associated Shield Building vent. The Shield Building vent is equipped with a high range gaseous effluent radiation monitor that meets all NUREG-0737 and Regulatory Guide 1.97, revision 2, requirements. The ABGTS is shown schematically in figure 5.

The Auxiliary Building vent is not used following an accident. In order to use the Auxiliary Building vent following an accident, the normal ventilation system would have to be returned to service. This would require the operators to take deliberate action to manually override the accident signal, open numerous dampers, manually start the normal ventilation system, and manually shut down the ABGTS. Such a combination of operator errors is highly unlikely. Based on the above information, TVA concludes that the Auxiliary Building vent is not a potential release path for postaccident radioactive effluents.

Additionally, during ABGTS operation airflow paths are maintained from clean areas to progressively dirty areas. The postaccident airflow rates are approximately 1/10 of normal operation. Please note that the Auxiliary Building HVAC system has the capability to maintain acceptable postaccident temperatures by use of individual ESF space coolers. The above information was condensed from FSAR sections 6.2.3, 6.5.1, 9.4.2, 9.4.3, and 9.4.5.3.

It is thus clear that provisions for initiating Auxiliary Building isolation and measuring the Auxiliary Building radioactive release with the Shield Building vent high-range monitor meet the intent of NUREG-0737.

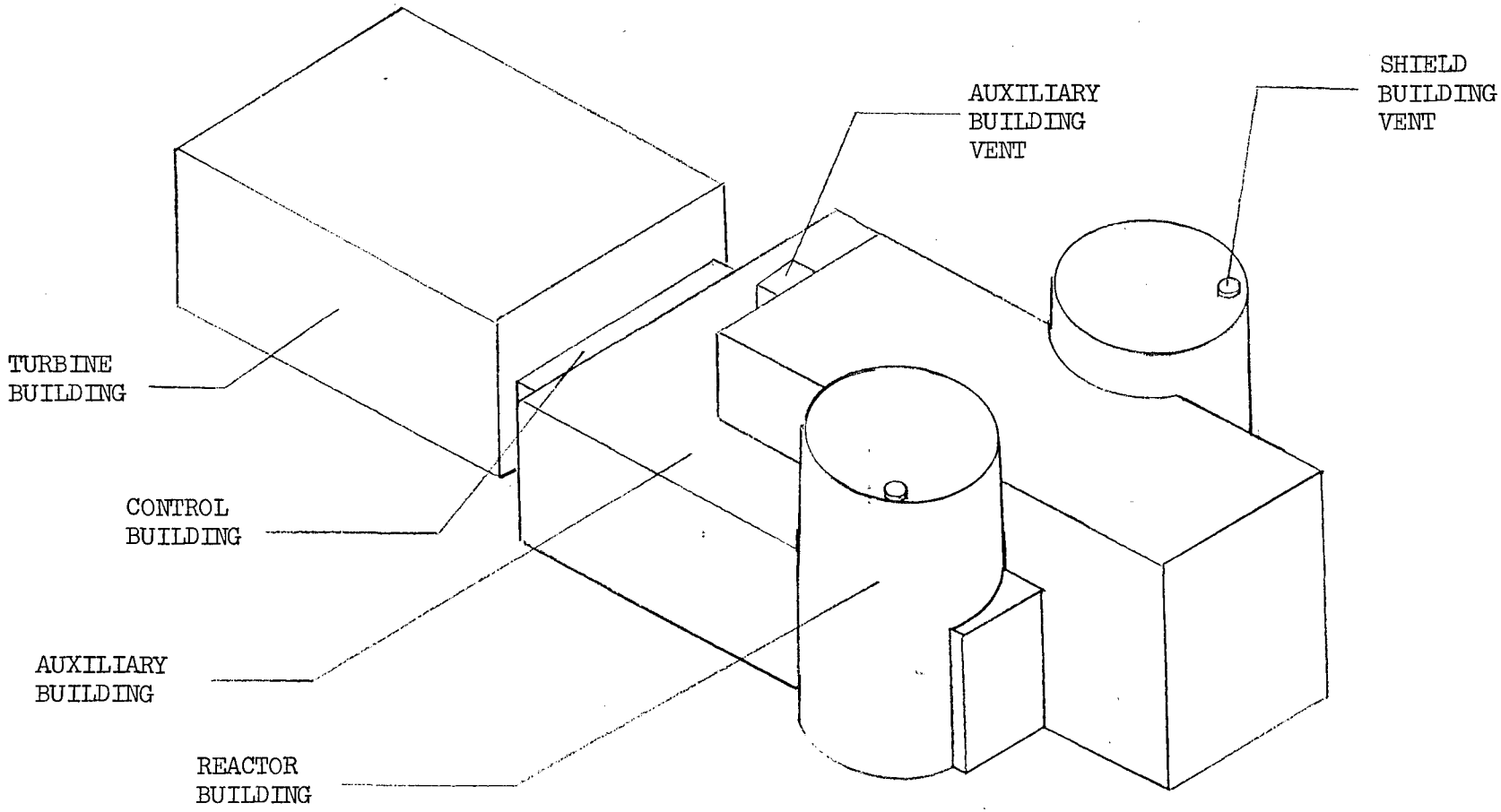

WATTS BAR NUCLEAR PLANT
FIGURE 1

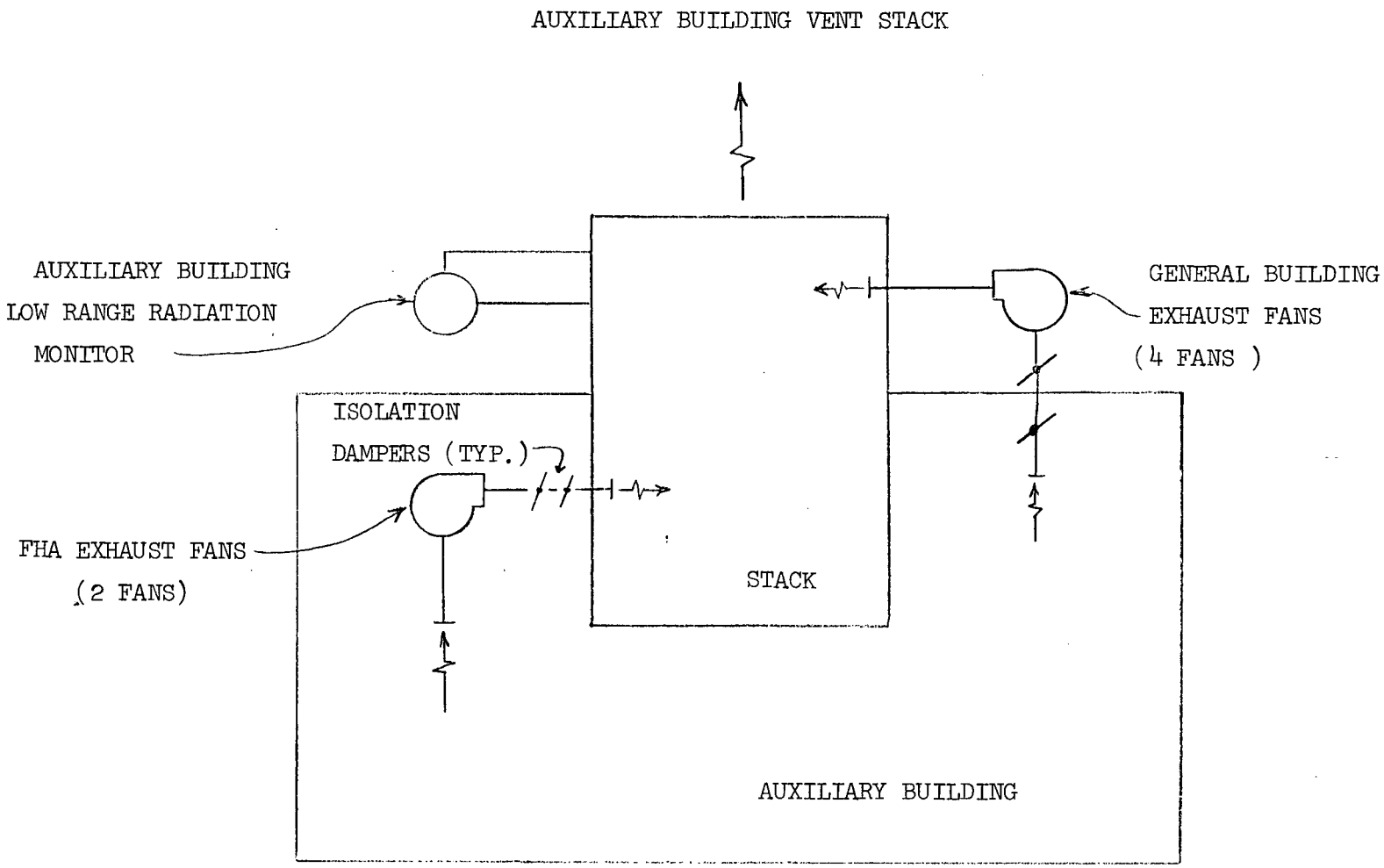

NOTES: 1. ISOLATION DAMPERS ARE ESF AND TRAINED (REDUNDANT)
2. EACH EXHAUST FAN HAS ITS OWN FLOW PATH INTO THE VENT
3. THERE ARE TWO ISOLATION DAMPERS PER FAN

FIGURE 2

SHIELD BUILDING VENT STACK

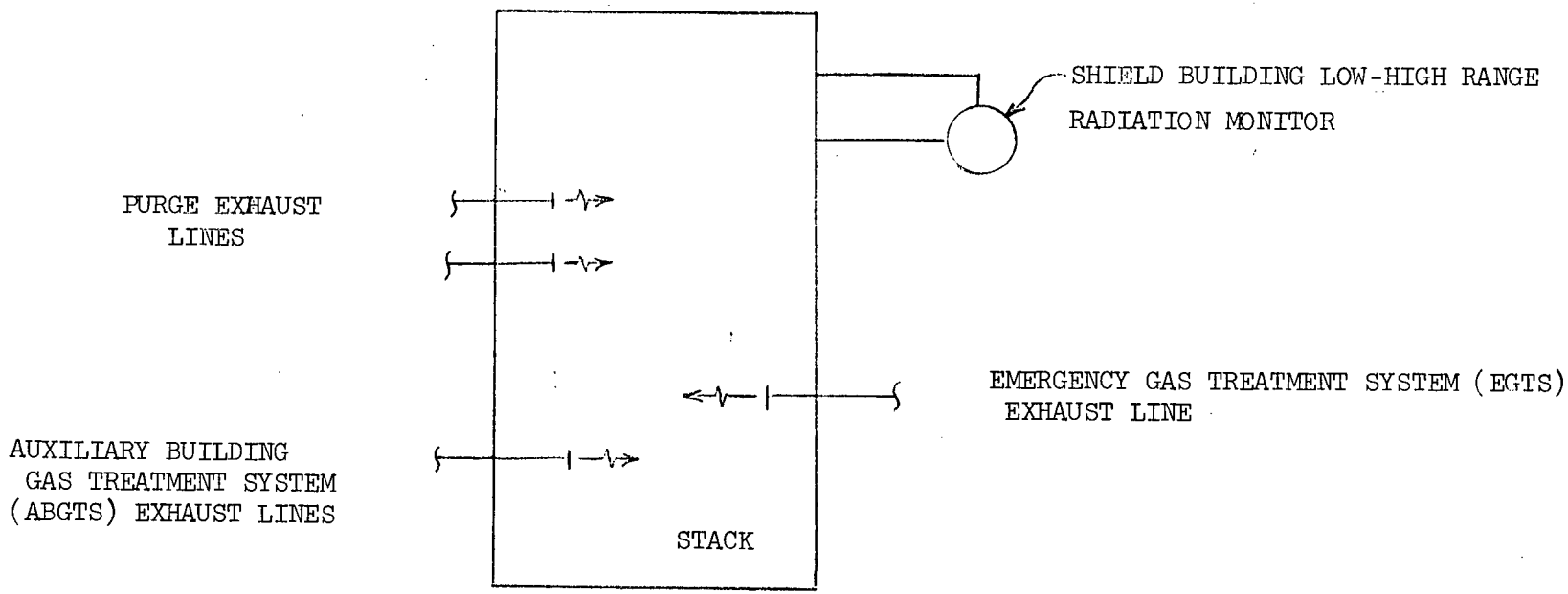

FIGURE 3

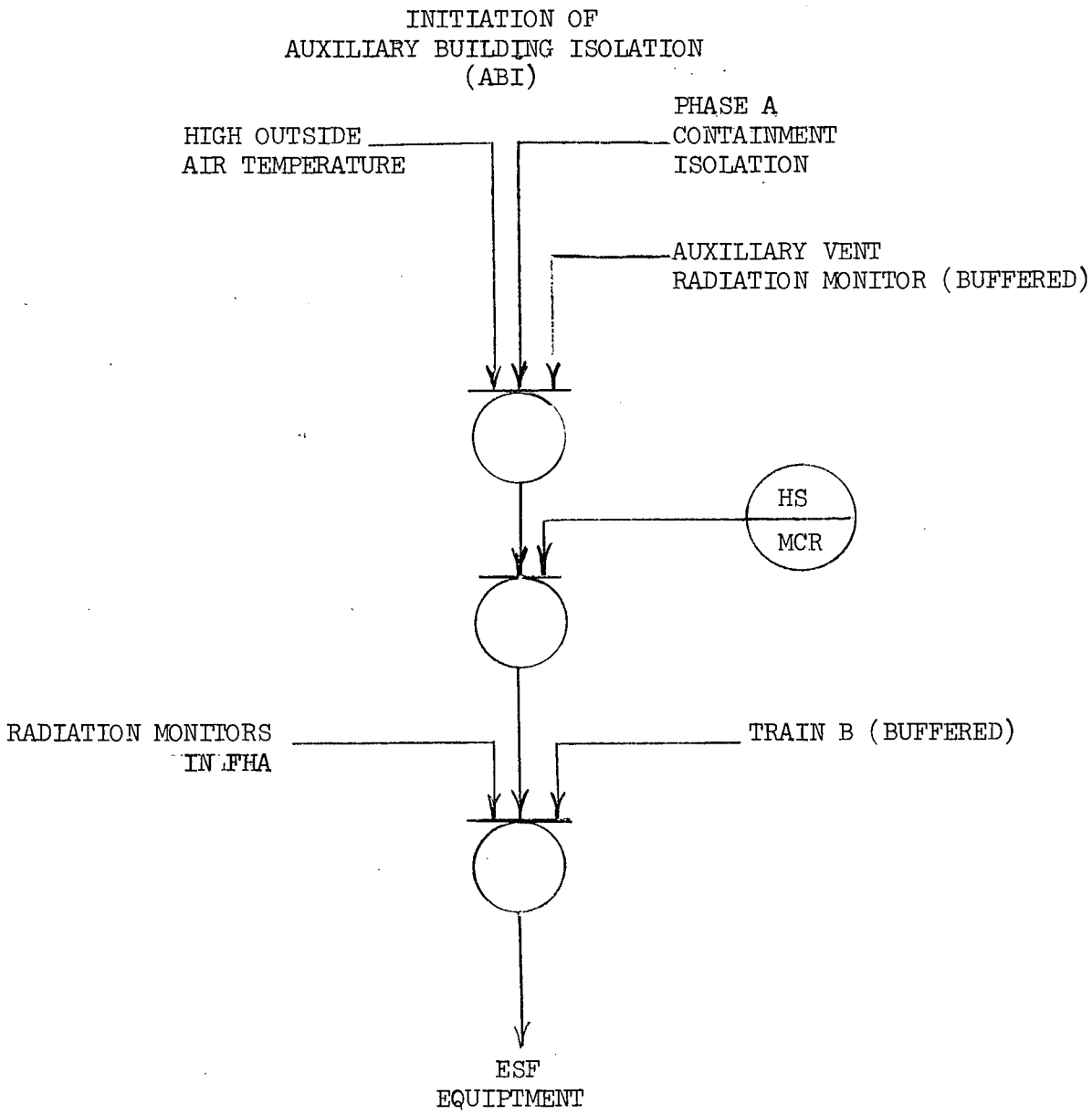

TRAIN A
(TRAIN B SIMILAR)

FIGURE 4

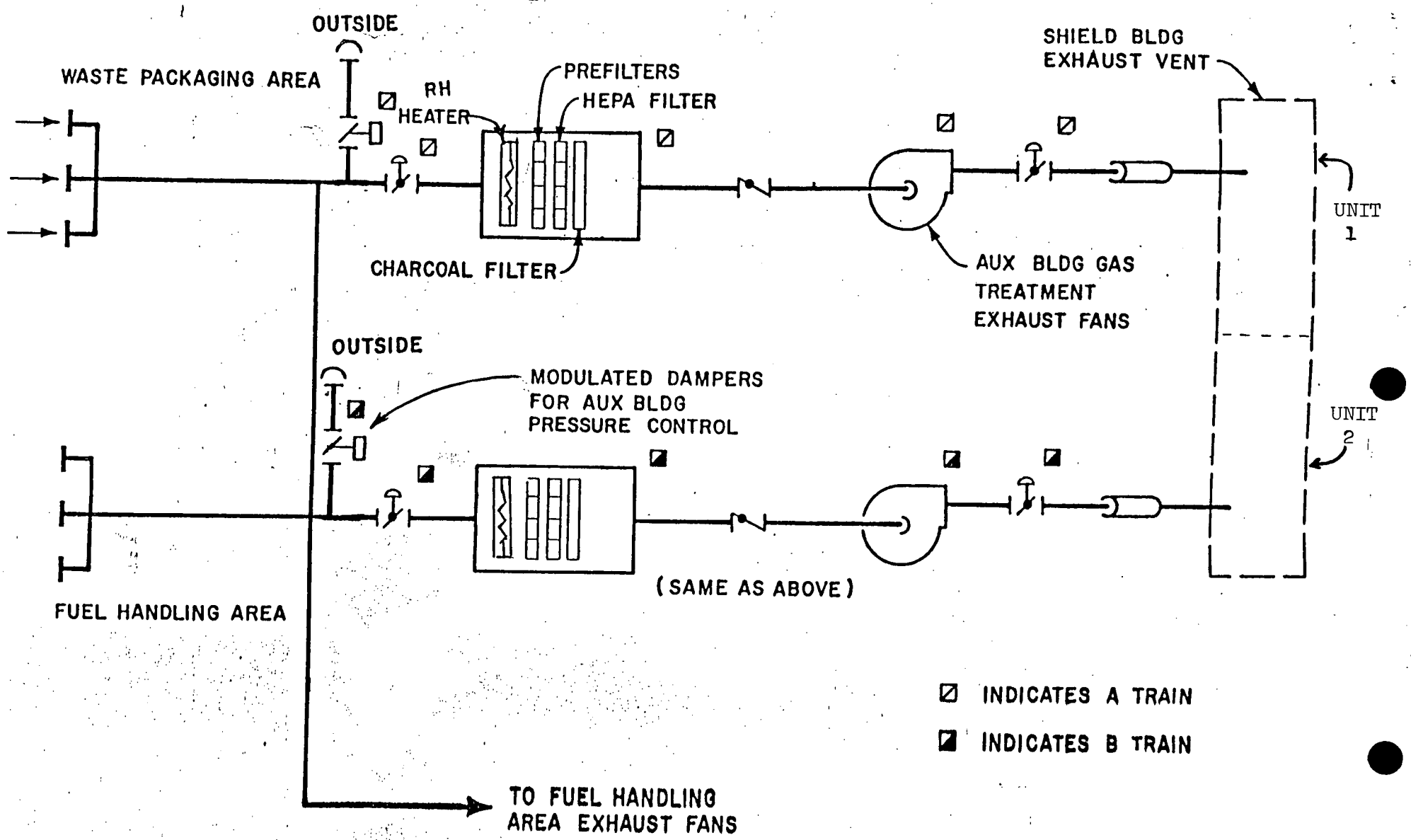
OUTSIDE
WASTE PACKAGING AREA
RH
HEATER
PREFILTERS
HEPA FILTER
CHARCOAL FILTER
SHIELD BLDG
EXHAUST VENT
UNIT
1
AUX BLDG GAS
TREATMENT
EXHAUST FANS
OUTSIDE
MODULATED DAMPERS
FOR AUX BLDG
PRESSURE CONTROL
UNIT
2
(SAME AS ABOVE)
FUEL HANDLING AREA
INDICATES A TRAIN
INDICATES B TRAIN
TO FUEL HANDLING
AREA EXHAUST FANS

FIGURE 5