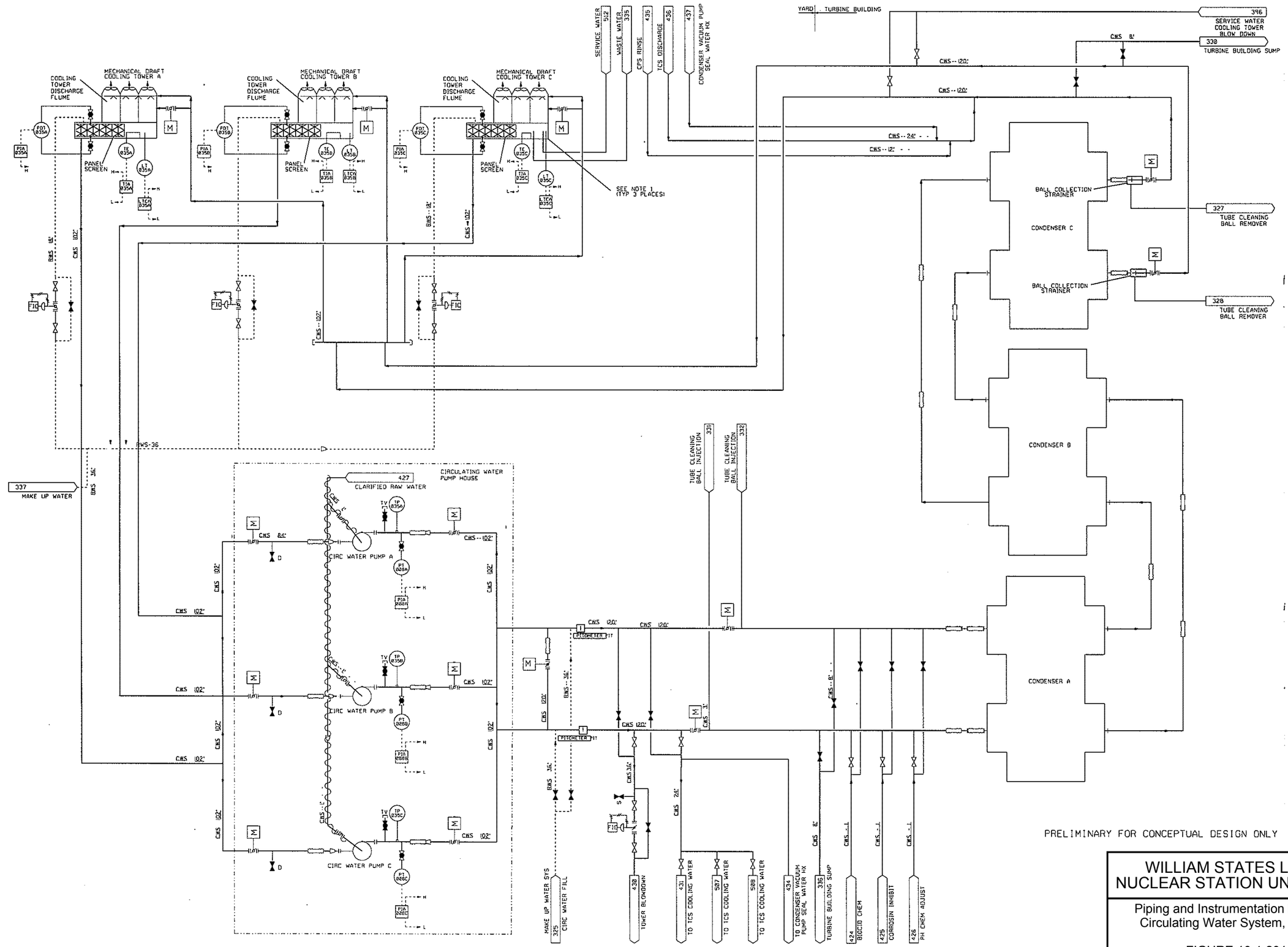

PRELIMINARY FOR CONCEPTUAL DESIGN ONLY

WLS CDI

WILLIAM STATES LEE III NUCLEAR STATION UNITS 1 & 2

Piping and Instrumentation Drawing, Circulating Water System, Sheet 1

FIGURE 10.4-201 Rev 0