ANP-10283NP
Revision 0

U.S. EPR Pressure-Temperature Limits Methodology for RCS Heatup and Cooldown

Technical Report

.

November 2007

AREVA NP Inc.

(c) 2007 AREVA NP Inc.

Copyright © 2007

AREVA NP Inc.
All Rights Reserved

ABSTRACT

This technical report provides the methodology for developing pressure-temperature (P-T) limits for protecting the integrity of the reactor coolant pressure boundary (RCPB) of the U.S. EPR. The methodology includes the applicable requirements of the ASME Boiler and Pressure Vessel (BPV) Code, Section XI, Appendix G (2004 Edition) and the requirements of 10 CFR 50, Appendix G. 10 CFR 50, Appendix G requires that P-T limits be established and that the P-T limits established are in compliance with the ASME BPV Code.

The components of the RCPB are designed to withstand the effects of cyclic loading due to system pressure and temperature changes during normal heatup and cooldown of the reactor coolant system and during anticipated operational occurrences. The pressure-temperature limits provide a margin of safety to preclude non-ductile failure of the RCPB during these operational transients.

Nature of Changes

Item	Section(s) or Page(s	Description and Justification
		original issue

Contents

Page

1.0 INTRODUCTION 1-1
2.0 FRACTURE TOUGHNESS REQUIREMENTS 2-1
2.1 Background 2-1
2.2 P-T Limits and Minimum Temperature Requirements 2-1
2.2.1 10 CFR Part 50, Appendix G 2-2
2.2.2 ASME Code 2-3
2.2.3 Limiting Components 2-3
3.0 MATERIAL PROPERTIES 3-1
3.1 Determination of Reference Temperature for Nil-Ductility Transition (RT_{NDT}) 3-1
3.2 Determination of RT_{NDT} of Unirradiated Material 3-2
3.3 ART for RPV Materials 3-2
4.0 ANALYTICAL METHODS FOR DETERMINING P-T LIMITS 4-1
4.1 Pressure Boundary Components 4-1
4.2 Maximum Postulated Defects 4-1
4.2.1 Beltline Region of Reactor Vessel 4-1
4.2.2 Closure Head 4-1
4.2.3 Inlet and Outlet Nozzle 4-2
4.3 Fracture Toughness of Reactor Vessel Steels 4-2
4.4 Transient Temperature and Thermal Stress Calculation 4-2
4.5 Stress Intensity Factors, K_I 4-4
4.5.1 Longitudinal Semielliptical Surface Flaws 4-4
4.5.2 Circumferential Semielliptical Surface Flaws 4-6
4.5.3 Nozzle Corner Semielliptical Surface Flaw 4-6
4.6 Determination of Appendix G Limits 4-7
4.7 Minimum Bolt Preload Temperature 4-8
4.8 Criticality Limit Temperature and Criticality Limit Curve Determination 4-8
4.9 LTOP Enable Temperature 4-9

5.0 CALCULATION OF P-T LIMITS FOR THE U.S. EPR 5-1
5.1 Normal Heatup and Cooldown 5-1
5.2 Summary of Uncorrected P-T Limits 5-3
5.3 Criticality Limit 5-3
5.4 LTOP Enable Temperature 5-3
6.0 SUMMARY AND CONCLUSION 6-1
7.0 REFERENCES 7-1

List of Tables

Page

Table 2–1 Pressure and Temperature Requirements for the Reactor Pressure Vessel 2-4

Table 3–1 Chemical Composition and Projected Fluence for the U.S. EPR Reactor Vessel Materials through 60 EFPY 3-3

Table 3–2 Adjusted Reference Temperature for the U.S. EPR Reactor Vessel Materials through 60 EFPY 3-4

List of Figures

Figure 3-1 RPV Beltline Welds 3-5

Figure 4–1 Postulated Longitudinal Flaw in Reactor Vessel 4-10

Figure 4–2 Circumferential Weld in Reactor Vessel Wall 4-11

Figure 5-1 U.S. EPR Heatup Temperature Transient 5-4

Figure 5–2 U.S. EPR Cooldown Temperature Transient 5-5

Figure 5–3 U.S. EPR Uncorrected RPV P-T Limits – Heatup 5-6

Figure 5–4 U.S. EPR Uncorrected RPV P-T Limits – Cooldown 5-7

Figure 5–5 U.S. EPR Uncorrected RPV P-T Limits – Criticality Limit 5-8

Nomenclature

Acronym	Definition
ART	Adjusted Reference Temperature
CFR	Code of Federal Regulations
EFPY	Effective Full Power Year
IRT_{NDT}	Initial Reference Temperature for Nil-Ductility Transition
ISI	Inservice Inspection
ISLH	Inservice Leak and Hydrostatic
K_{IR}	Crack Arrest Critical Stress Intensity Factor
K_{Ia}	Crack Arrest Critical Stress Intensity Factor
K_{Ic}	Critical or Reference Stress Intensity Factor
LTOP	Low-Temperature Overpressure Protection
NDE	Non-Destructive Examination
P-T	Pressure-Temperature
RCPB	Reactor Coolant Pressure Boundary
RCS	Reactor Coolant System
RG	Regulatory Guide
RPV	Reactor Pressure Vessel
RT_{NDT}	Reference Temperature for Nil-Ductility Transition
WRCB	Welding Research Council Bulletin

1.0 INTRODUCTION

This document presents the methodology for developing pressure-temperature (P-T) limits for the reactor coolant pressure boundary (RCPB) of the U.S. EPR. This technical report is based on the methodologies of the ASME BPV Code, Section XI, Appendix G (Reference 1) and 10 CFR Part 50, Appendix G, Fracture Toughness Requirements (Reference 2).

The reactor pressure vessel (RPV) beltline materials used in the U.S. EPR satisfy Charpy upper-shelf energy requirements throughout the 60-year life of the vessel; therefore, this report does not specifically address low upper-shelf toughness issues. This is due to the selection of beltline materials which have very low levels of residual elements.

The components of the RCPB are designed to withstand the effects of cyclic loads due to system pressure and temperature changes. These loads are introduced by startup (i.e., heatup) and shutdown (i.e., cooldown) operations, and operational transients. Because of inherent conservatism in the methodology, the P-T limits provide a margin of safety to preclude non-ductile failure of the RCPB during changes in pressure and temperature. Due to neutron irradiation over the plant lifetime, the RPV is the component most subject to non-ductile failure. The P-T limit methodology described herein applies to the limiting components of the RPV.

2.0 FRACTURE TOUGHNESS REQUIREMENTS

2.1 Background

The U.S. Nuclear Regulatory Commission (NRC) has established fracture toughness requirements for ferritic materials in pressure-retaining components of the RCPB to provide adequate margins of safety over its service lifetime. 10 CFR Part 50.60, Acceptance Criteria for Fracture Prevention Measures for Light Water Nuclear Power Reactors for Normal Operation (Reference 3) requires compliance with the fracture toughness requirements set forth in 10 CFR Part 50, Appendix G which additionally requires compliance with Reference 1. These fracture toughness requirements, including pressure-temperature (P-T) limits, apply during inservice leak and hydrostatic (ISLH) testing and any condition of normal operation, including anticipated operational occurrences (AOO). Compliance with these requirements protects the structural integrity of the RCPB, specifically the RPV. The regulations in 10 CFR 50.60 and the associated 10 CFR Part 50, Appendix G provide the general basis for these limits.

10 CFR Part 50, Appendix G requires that P-T limits be at least as conservative as the limits obtained by following Reference 1. The U.S. EPR complies with the 10 CFR Part 50, Appendix G requirement to develop P-T limits in accordance with the specifications of Reference 1.

2.2 *P-T Limits and Minimum Temperature Requirements*

P-T limits are prescribed to avoid encountering pressure, temperature and temperature rate of change conditions that might cause undetected flaws to propagate and cause non-ductile failure of the RCPB. The P-T limits and minimum temperature requirements are derived from 10 CFR Part 50, Appendix G and Reference 1.

2.2.1 *10 CFR Part 50, Appendix G*

10 CFR 50, Appendix G.IV.A.2.a, b, c, and d specify the following P-T and minimum temperature requirements: (Note: A typographical error in Section IV A.2.a, b and c is corrected from “Table 3” to “Table 1.”)

a. “Pressure-temperature limits and minimum temperature requirements for the reactor vessel are given in Table 1, and are defined by the operating condition (i.e., hydrostatic pressure and leak tests, or normal operation including anticipated operational occurrences), the vessel pressure, whether or not fuel is in the vessel, and whether the core is critical. In Table 1, the vessel pressure is defined as a percentage of the preservice system hydrostatic test pressure. The appropriate requirements on both the pressure-temperature limits and the minimum permissible temperature must be met for all conditions.

b. The pressure-temperature limits identified as "ASME Appendix G limits" in Table 1 require that the limits must be at least as conservative as limits obtained by following the methods of analysis and the margins of safety of Appendix G of Section XI of the ASME Code.

c. The minimum temperature requirements given in Table 1 pertain to the controlling material, which is either the material in the closure flange or the material in the beltline region with the highest reference temperature. As specified in Table 1, the minimum temperature requirements and the controlling material depend on the operating condition (i.e., hydrostatic pressure and leak tests, or normal operation including anticipated operational occurrences), the vessel pressure, whether fuel is in the vessel, and whether the core is critical. The metal temperature of the controlling material, in the region of the controlling material which has the least favorable combination of stress and temperature, must exceed the appropriate minimum temperature requirement for the condition and pressure of the vessel specified in Table 1.

d. Pressure tests and leak tests of the reactor vessel that are required by Section XI of the ASME Code must be completed before the core is critical.”

The minimum temperature requirements for the material reference temperature for nil-ductility transition (RT_{NDT}) in Table 1, “Pressure and Temperature Requirements for the Reactor Pressure Vessel,” of 10 CFR Part 50, Appendix G (included as Table 2-1 in this report), is partially based on ASME BPV Code Section III, NB-2300 (Reference 4) and are incorporated in the development of the P-T limit curves.

2.2.2 *ASME Code*

In 1987, Reference 1 adopted the requirements of ASME BPV Code Section III, Appendix G (Reference 5), except for the name of the fracture toughness curve, K_{IR}, which was labeled as K_{Ia}. This was done for consistency with the corresponding curve in Section XI of the ASME code which is labeled as K_{Ia}. This was also done to place the nuclear power plant operational requirements in Reference 1 rather than in Reference 5. Section III addresses design and construction of nuclear power plants and has no provision for the effects of neutron irradiation on RPV beltline materials. If neutron fluence levels are greater than anticipated during the service lifetime of RCPB components, the P-T limits are re-evaluated to account for the potential degradation in material toughness.

The methodology of Reference 1 postulates the pre-existence of certain surface flaws in the limiting components of the RPV. The Reference 1 methods are described in Section 5 of this Technical Report.

2.2.3 *Limiting Components*

The components of the RCPB are designed to withstand the effects of cyclic loads due to system pressure and temperature changes. The P-T limits establish operating limits that provide a margin to preclude non-ductile failure of the RPV and piping of the RCPB. For P-T limits, the closure head, outlet nozzle and beltline region are the three components analyzed.

Due to neutron radiation induced embrittlement, the beltline region of the reactor vessel is the most critical component. The closure head is important in the development of P-T limits due to preoperational bolt-up stress and the minimum temperature requirements in Table 2-1. RPV nozzles are analyzed with a postulated nozzle corner crack as described in Welding Research Council Bulletin (WRCB) 175 (Reference 6). Other RCPB components are considered bounded by these three analyzed components.

Table 2–1 Pressure and Temperature Requirements for the Reactor Pressure Vessel

Operating Condition	Vessel Pressure[1]	Requirements for Pressure-Temperature Limits	Minimum Temperature Requirements
1. Hydrostatic pressure and leak tests (core is not critical):			
1.a Fuel in the vessel	≤ 20%	ASME Appendix G Limits	(2)
1.b Fuel in the vessel	> 20%	ASME Appendix G Limits	(2) + 90°F (6)
1.c No fuel in the vessel, (Preservice Hydrotest Only)	ALL	(Not Applicable)	(3) + 60°F
2. Normal operation (incl. heat-up and cool-down), including anticipated operational occurrences (AOOs):			
2.a Core not critical	≤ 20%	ASME Appendix G Limits	(2)
2.b Core not critical	> 20%	ASME Appendix G Limits	(2) + 120°F (6)
2.c Core critical	≤ 20%	ASME Appendix G Limits + 40°F	Larger of [(4)] or [(2) + 40°F]
2.d Core critical	> 20%	ASME Appendix G Limits + 40°F	Larger of [(4)]or [(2)+160°F]
2.e Core critical for BWR([5])	≤ 20%	ASME Appendix G Limits + 40°F	(2) + 60°F

Notes to Table 2–1:

1. Percent of the preservice system hydrostatic test pressure.
2. The highest reference temperature of the material in the closure flange region that is highly stressed by the bolt preload.
3. The highest reference temperature of the vessel.
4. The minimum permissible temperature for the inservice system hydrostatic pressure test.
5. For boiling water reactors (BWR) with water level within the normal range for power operation.
6. Lower temperatures are permissible if they can be justified by showing that the margins of safety of the controlling region are equivalent to those required for the beltline when it is controlling.

3.0 MATERIAL PROPERTIES

3.1 *Determination of Reference Temperature for Nil-Ductility Transition (RT_{NDT})*

The key material parameter regarding P-T limits is RT_{NDT}. This parameter is the basis for the required minimum temperatures and the fracture toughness K_{Ic} curve in Reference 1. The RT_{NDT} values for unirradiated materials are determined by the rules given in Reference 4. The RT_{NDT} values for irradiated materials (needed only for RPV beltline materials) are obtained from RG 1.99, Rev. 2 (Reference 7). According to Reference 7, the RT_{NDT} value for unirradiated materials is defined as the initial reference temperature for nil-ductility transition (IRT_{NDT}).

In RG 1.99, Rev. 2 (Reference 7), the adjusted reference temperature (ART), is given as:

$$ART = IRT_{NDT} + \Delta RT_{NDT} + Margin \quad (3\text{-}1)$$

The terms are defined further in Reference 7. The ART is the RT_{NDT} value for irradiated materials. The RT_{NDT} is input to the reference fracture toughness equation of Reference 1 (terms and units are further defined in Reference 1):

$$K_{Ic} = 33.2 + 20.734 \exp[0.02(T - RT_{NDT})] \quad (3\text{-}2)$$

Where:

K_{Ic} = the critical stress intensity factor

T = temperature

RT_{NDT} = reference temperature for nil-ductility transition

3.2 *Determination of RT_{NDT} of Unirradiated Material*

The initial RT_{NDT} of the ferritic materials is determined in accordance with the fracture toughness requirements of Reference 4. The initial RT_{NDT} for all ferritic pressure retaining and integrally attached material of the RPV is -4°F. This value is the limit for manufacture and is therefore conservative.

3.3 *ART for RPV Materials*

Table 3-1 provides the material composition of RPV beltline components and the projected neutron fluence at different locations for 60 effective full power years (EFPY). The welds in the RPV beltline region are shown on Figure 3-1. The RPV is a vertically-mounted cylindrical vessel consisting of forged shells, a transition ring, nozzles and heads. There are no longitudinal seam welds. Table 3-2 presents a summary of ART values the reactor vessel beltline components, closure head and nozzles at 60 EFPYs. Initial RT_{NDT} data are also presented in Table 3-2. P-T limits account for the ART for RPV materials at the end of the 60-year service lifetime.

Table 3–1 Chemical Composition and Projected Fluence for the U.S. EPR Reactor Vessel Materials through 60 EFPY

Material Description		Chemical Composition		Chemistry Factor	60 EFPY Fluence, n/cm^2		
Reactor Vessel	Type	Cu wt %	Ni wt %		Inner Wetted Surface	1/4t Location	3/4t Location
Nozzle Shell	SA-508 Grade 3 Class 1	0.08	0.80	51.0	2.103E+17	1.111E+17	3.410E+16
Upper Core Shell	SA-508 Grade 3 Class 1	0.06	0.80	37.0	1.375E+19	7.262E+18	2.230E+18
Lower Core Shell	SA-508 Grade 3 Class 1	0.06	0.80	37.0	1.375E+19	7.262E+18	2.230E+18
Transition Ring	SA-508 Grade 3 Class 1	0.08	0.80	51.0	4.406E+18	2.327E+18	7.145E+17
Weld #1	Low Alloy Steel Weld	0.06	1.20	82.0	2.103E+17	1.111E+17	3.410E+16
Weld #2	Low Alloy Steel Weld	0.06	1.20	82.0	1.368E+19	7.225E+18	2.218E+18
Weld #3	Low Alloy Steel Weld	0.06	1.20	82.0	4.406E+18	2.327E+18	7.145E+17

wt % = weight percentage

t = wall thickness

Table 3–2 Adjusted Reference Temperature for the U.S. EPR Reactor Vessel Materials through 60 EFPY

Material Description		Initial RT_{NDT} (°F)	ART, °F at 60 EFPY	
Reactor Vessel	Type		1/4t Location	3/4t Location
Nozzle Shell	SA-508, Grade 3, Class 1	-4	8.0	1.2
Upper Core Shell	SA-508, Grade 3, Class 1	-4	63.4	40.2
Lower Core Shell	SA-508, Grade 3, Class 1	-4	63.4	40.2
Transition Ring	SA-508, Grade 3, Class 1	-4	57.8	32.0
Weld #1	Low Alloy Steel Weld	-4	15.4	4.2
Weld #2	Low Alloy Steel Weld	-4	126.5	93.4
Weld #3	Low Alloy Steel Weld	-4	95.4	53.8
Closure Head	SA-508, Grade 3, Class 1	-4	-4	N/A
Closure Head	Closure Head Weld	-4	-4	N/A

Figure 3-1 RPV Beltline Welds

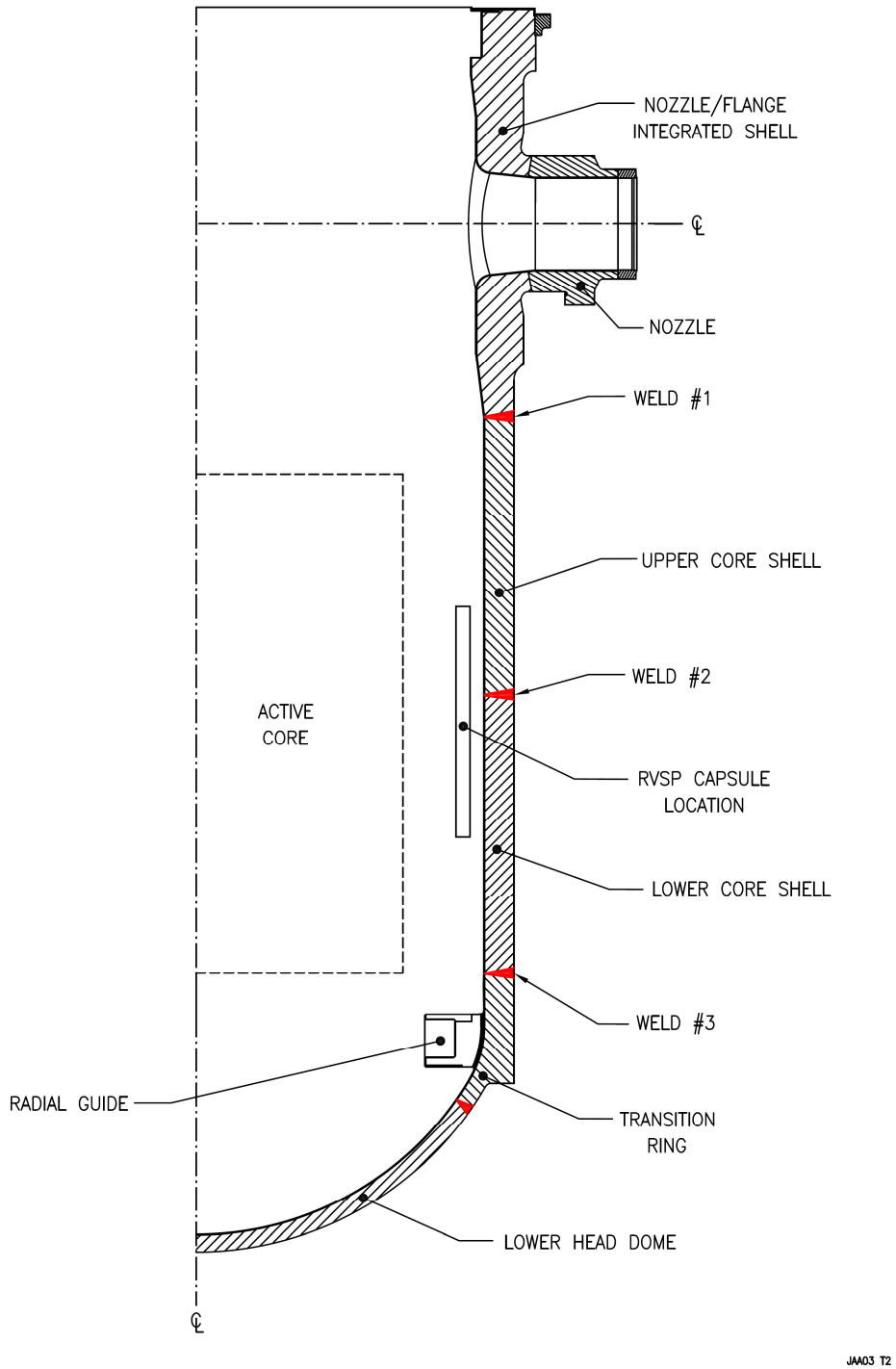

4.0 ANALYTICAL METHODS FOR DETERMINING P-T LIMITS

4.1 *Pressure Boundary Components*

P-T limits are established for the limiting RCPB components as described in Section 2.2.3.

4.2 *Maximum Postulated Defects*

4.2.1 *Beltline Region of Reactor Vessel*

The methods of Reference 1 postulate the existence of a sharp surface flaw in the RPV that is normal to the direction of the maximum stress. This flaw is postulated to have a depth that is equal to one-quarter of the RPV beltline thickness (1/4t), and a length equal to 1.5 times the RPV beltline thickness, as shown in Figure 4-1. In Reference 1, there is no requirement as to which surface (inside or outside) on which to postulate the defect. In application, the defect is postulated on both internal and external surfaces of reactor vessels (1/4t and 3/4t locations, respectively), even though there is no water environment and no known causes for crack initiation or propagation on the external surface of reactor vessels.

For circumferential seam welds in the RPV, 1/4t defect is postulated in the circumferential direction as shown in Figure 4-2.

4.2.2 *Closure Head*

The reactor closure head is subjected to high stresses due to bolt preload-induced bending and internal pressure. Because the bolt stresses induce tensile bending stresses on the external surface, an external surface defect is postulated. According to Article G-2120 of Reference 1, a flaw size less than 1/4t may be postulated on an individual case basis. **[**

] Considering the relatively ease of inspection of this region, postulation of this size defect is rather conservative. Because the **[ ]** location

from the outside is rather insensitive to the inside downcomer reactor coolant temperature, the closure head limit is controlled by heatup rates. This limit bounds the cooldown limit of the closure head.

4.2.3 *Inlet and Outlet Nozzle*

As allowed by Article G-2120 of Reference 1, a flaw with a depth of one inch is postulated in the corners of inlet and outlet nozzles. This assumption is based on past inservice inspection (ISI) results of nozzle corner radius regions in pressurized water reactors in the United States which have not shown any reportable indications. In addition, the reliability of defect detection and sizing capability demonstrated for nozzle corner regions has significantly improved since the performance demonstration initiative (PDI) program in 1994 from Technical Basis for Elimination of Reactor Vessel Nozzle Inner Radius Inspection (Reference 8). NRC regulations in 10 CFR 50.55a Codes and Standards (Reference 9) impose requirements for ISI.

Figure 5 of Reference 8 illustrates the probability of detecting and rejecting a flaw, 0.25-inch into the base metal, is equal to or greater than 90 percent and the probability of detecting and rejecting a flaw 0.5-inch or greater into the base material is 100 percent. Also, because the nozzle region does not have much exposure to neutron radiation compared with the beltline region, the limit curves for inlet and outlet nozzles do not change with increasing operating time.

4.3 *Fracture Toughness of Reactor Vessel Steels*

Reference 1 requires the critical stress intensity factor K_{Ic}, defined by equation 3-2, be used in P-T limit calculations.

4.4 *Transient Temperature and Thermal Stress Calculation*

The analytical processes used in the determination of the allowable pressures for the generation of P-T limits are described:

The temperature profile through the reactor vessel wall is determined by solving the one-dimensional axisymmetric heat conduction equation:

$$\rho C_p \frac{\partial T}{\partial t} = k\left(\frac{\partial^2 T}{\partial r^2} + \frac{1}{r}\frac{\partial T}{\partial r}\right) \tag{4-1}$$

The equation is subjected to these boundary conditions at the inside and the outside walls of the reactor vessel:

at the inside wall where: $r = R_i$,

$$-k\frac{\partial T}{\partial r} = h(T_w - T_b)$$

at the outside wall where: $r = R_o$,

$$\frac{\partial T}{\partial r} = 0$$

Where:

ρ	=	density
C_p	=	specific heat
K	=	thermal conductivity
T	=	vessel wall temperature
r	=	radius
t	=	time
h	=	convective heat transfer coefficient
T_w	=	wall temperature
T_b	=	bulk coolant temperature
R_i	=	inside radius of vessel wall
R_o	=	outside radius of vessel wall

Equation 4-1 is solved numerically using a finite difference or finite element method to determine the wall temperature as a function of radius, time and thermal transient rate. Once a temperature profile through the reactor vessel wall is determined for a particular time point, the corresponding thermal stresses are determined from the theory of elasticity or a finite element model in the radial direction. This numerical procedure is particularly important for multi-rate heatup and cooldown cases. The U.S. EPR has a multi-rate cooldown ramp which is considered in the development of P-T limits.

4.5 *Stress Intensity Factors, K_I*

The use of any particular stress intensity factor solution presented in this document or in Reference 1 is allowed, because the resulting K_I values are appropriate. The choice of K_I equation usually depends on the form of stress profiles used in the solution. The applicable K_I equations include those provided in Reference 1 and are not repeated in this report. These terms and units are further defined in the references and are expressed in U.S. customary units.

4.5.1 *Longitudinal Semielliptical Surface Flaws*

The stress intensity factor equation for a longitudinal semielliptical surface flaw **[**

] is considered well suited for the development of P-T limits because the solution is for a cylinder not for a plate. The solution is based on the finite element analysis of cylinders with radius to thickness ratios of **[**

]

Only the stress intensity factors defined in this document or in Reference 1 are used for the U.S. EPR.

4.5.2 *Circumferential Semielliptical Surface Flaws*

The K_I solution for a circumferential flaw shown is from **[**

]

Only the stress intensity factors defined in this document or in Reference 1 are used for the U.S. EPR.

4.5.3 *Nozzle Corner Semielliptical Surface Flaw*

The determination of the stress intensity factor for a nozzle corner crack is based on the method contained in Reference 6, which gives the following equation:

$$K_I = \sigma\sqrt{\pi a}F(a/r_n) \tag{4-10}$$

Where: $F = 2.5 - 6.108(a/r_n) + 12\,(a/r_n)^2 - 9.1664\,(a/r_n)^3$

σ = hoop stress

a = crack depth

r_n = apparent radius of nozzle, in which is given by the equation,

$r_n = r_i + 0.29r_c$

r_i = actual inner radius of nozzle

r_c = nozzle radius

The membrane stress is the hoop stress due to pressure and is determined using Lame's solution for thick wall cylinders subjected to internal pressure. The maximum hoop stress is developed at the inside surface of the wall and is given by:

$$\sigma = p \frac{R_o^2 + R_i^2}{R_o^2 - R_i^2} \tag{4-11}$$

The maximum hoop stress at the inside surface is conservatively assumed as a uniform membrane stress across the entire wall thickness.

4.6 *Determination of Appendix G Limits*

The governing equation for determining the pressure-temperature operating limit curves is equation 1 from Article G-2215 of Reference 1:

$$(S.F.)\ K_{Im} + K_{It} \leq K_{Ic} \tag{4-12}$$

Where: S.F. = safety factor

= 2 for normal and upset conditions

= 1.5 for ISLH testing

K_{Im} = stress intensity factor due to internal pressure

K_{It} = stress intensity factor due to thermal gradient

K_{Ic} = reference stress intensity factor and;

$= 33.2 + 20.734 \exp[0.02(T - RT_{NDT})]$

For a thermal transient analysis, a temperature profile is calculated for a given point in time during a heatup or cooldown transient. K_{Ic} is determined from the crack-tip temperature, T, and the material RT_{NDT} at a given location. RT_{NDT} is determined in accordance with Reference 7 based on the neutron fluence and chemical composition of the material. The temperature profile (thermal gradient) determines the thermal

stresses at various points throughout the reactor vessel wall. If the stress intensity factor is defined as for a pressure of one psi, $\overline{K}_{Ip}$, the allowable pressure is determined using the following equation:

$$P_{allow} = \frac{K_{Ic} - K_{It}(T_f)}{(S.F.) \cdot \overline{K}_{Ip}} \tag{4-13}$$

Where:

T_f = fluid temperature.

A plot showing the allowable pressure as a function of bulk coolant temperature is a P-T limit curve. The same procedure applies to the ISLH testing except the safety factor is 1.5, instead of 2.0.

4.7 *Minimum Bolt Preload Temperature*

In accordance with the requirements of 10 CFR 50 Appendix G, Table 1, item 2(a), the minimum bolt preload temperature is equal to the highest reference temperature of the material in the closure flange region that is highly stressed by the bolt preload. For the U.S. EPR, the minimum bolt preload temperature **[ ]** Therefore, the minimum bolt preload temperature should be **[ ]** or the highest reference temperature of the closure flange region, whichever is greater.

4.8 *Criticality Limit Temperature and Criticality Limit Curve Determination*

The criticality limit temperature is obtained by determining the maximum ISLH testing temperature at a pressure of 2500 psig (approximately 10 percent above the normal full-power operating pressure). The ISLH analysis conservatively considers the most limiting heatup and cooldown transients. Once the ISLH test temperature at 2500 psig is determined, it is compared to RT_{NDT} +160°F. The larger temperature between these two becomes the criticality limit temperature. Item 2.d in Table 2-1 specifies that the criticality limit curve is the criticality limit temperature or the Appendix G limit curve shifted by 40°F, whichever is greater.

4.9 *LTOP Enable Temperature*

The low-temperature overpressure protection (LTOP) enable temperature is defined in Article G-2215 of ASME Code Section XI, Appendix G as 200°F or the reactor coolant temperature corresponding to the reactor vessel metal temperature, equal to RT_{NDT} + 50°F, whichever is greater. However, in the latter case, the enable temperature is determined by additionally accounting for the difference in temperature between the 1/4t crack-tip metal temperature and the reactor coolant temperature, because the metal temperature is lower than the coolant temperature during heatup. Article G-2215 also specifies that LTOP systems limit the maximum pressure to 100 percent of the pressure determined to satisfy equation 1, which is provided above as equation 4-8. The actual LTOP set point is determined to protect the controlling P-T limit curve, which is the normal heatup closure head limit curve.

Figure 4–1 Postulated Longitudinal Flaw in Reactor Vessel

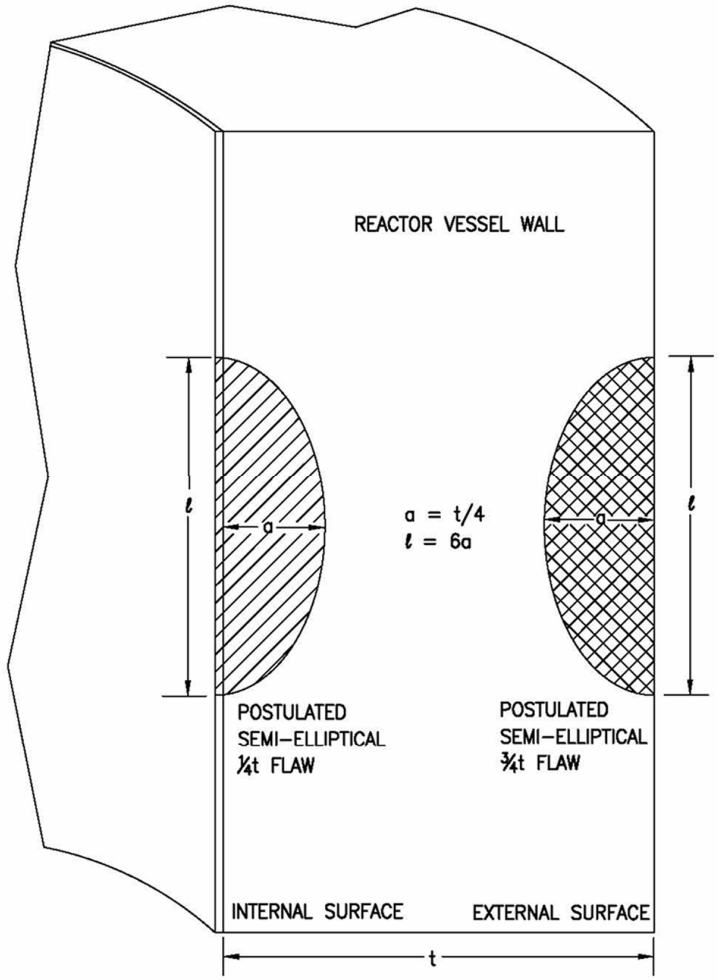

NOTES:
1. POSTULATED FLAWS ON THE VERTICAL PLANE OF THE REACTOR VESSEL BELTLINE WALL
2. DRAWING NOT TO SCALE

Figure 4–2 Circumferential Weld in Reactor Vessel Wall

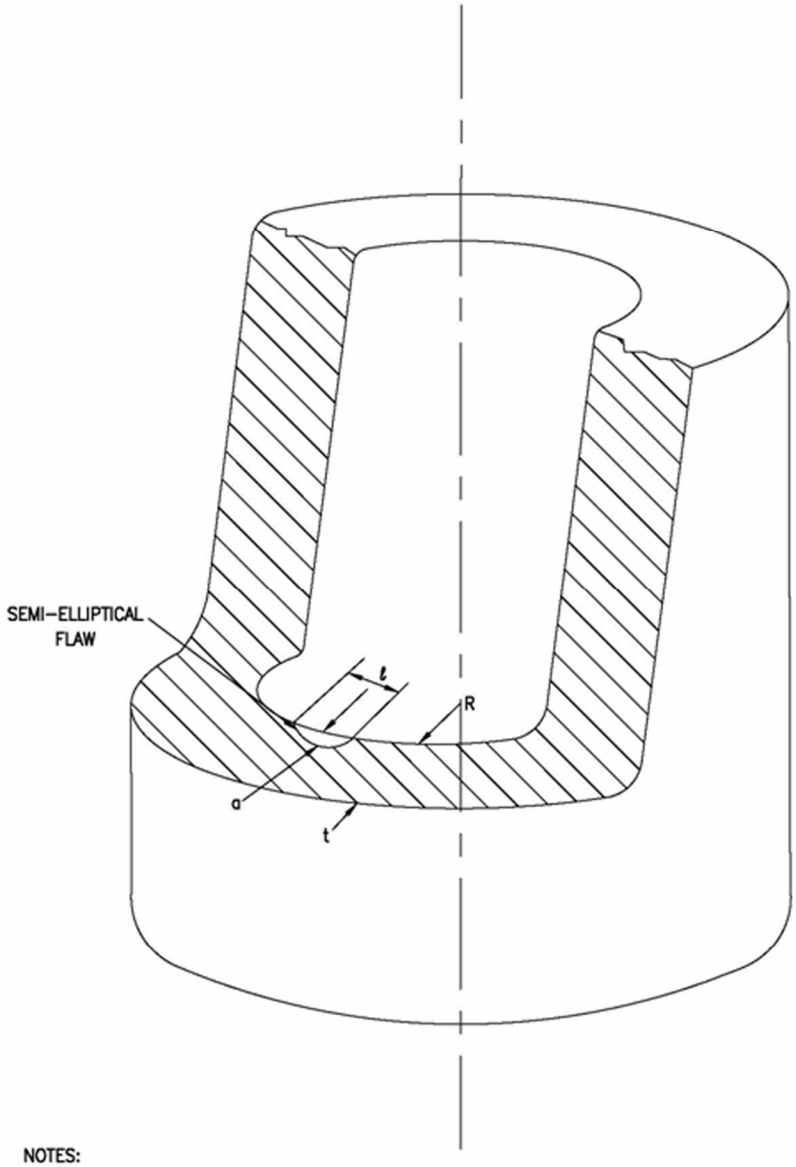

NOTES:
1. POSTULATED FLAWS ON THE HORIZONTAL PLANE OF THE REACTOR VESSEL BELTLINE WALL
2. DRAWING NOT TO SCALE
3. $a = t/4$; $\ell = 6a$

4–2

5.0 CALCULATION OF P-T LIMITS FOR THE U.S. EPR

5.1 *Normal Heatup and Cooldown*

A first step in establishing P-T limits is the collection of geometrical data and material properties including RT_{NDT} of the limiting materials. Table 3-1 and Table 3-2 provide the material properties used in the analysis.

For heatup and cooldown limits, a heatup RCS coolant temperature-time history (hereinafter referred to as "temperature-time history") is created. Figure 5-1 and Figure 5-2 are based on plant system operations and are typical heatup and cooldown temperature-time histories, respectfully. With this input, allowable pressures are calculated for each selected time point of the temperature-time history. Actual heatup or cooldown rates can be anywhere between steady-state condition (adiabatic) and the specified limits represented by the plot lines in Figure 5-1 and Figure 5-2.

The 1/4t flaws are postulated at both inside and outside surfaces (1/4t and 3/4t flaws, respectively) of the reactor vessel beltline region, remote from discontinuities.

A second region, namely the nozzle corner in the RPV beltline region, is also assessed for allowable pressure at each selected time point. For the nozzle, the flaw is postulated to be located on an inside surface. Because flaws are postulated on the inside and outside surfaces in the beltline region, three allowable pressure values are determined. These are the transient 1/4t and 3/4t flaw values and steady-state 1/4t flaw value. Two additional pressure values are determined for the nozzle corner crack location (representing transient and steady-state conditions).

Finally, the allowable pressure is determined for a third region, namely the closure head region. The closure head limits are developed from a separate analysis, considering the postulated outside surface flaw, as described in Section 4.2.2. The normal heatup and cooldown stresses in the closure head region are obtained from a detailed finite element stress analysis of the reactor vessel closure. The **[ ]** stress

intensity factor equation (4-2) is used. The allowable pressure and temperature limits for the reactor vessel closure head are determined considering the requirements of Reference 1 and Reference 2. Among these six pressure values, the lowest one is determined and considered to be the maximum allowable pressure value at each selected time point. In this manner the results at various selected temperature-time history time points are determined to produce a single lower bound P-T limit curve for normal heatup or normal cooldown. The pressure values, along with the associated RCS coolant temperatures at the selected time points of the temperature-time history form the P-T limit curves. The lowest allowable pressure at each time point yields a single lower bound P-T limit curve for normal heatup or normal cooldown. The P-T curves associated with the three regions of the reactor vessel, for normal plant heatup and cooldown, are presented in Figure 5-3 and Figure 5-4, respectively.

The P-T limit curve for the closure head region is calculated separately. The allowable pressure from plant startup is maintained as a constant value of 635 psig (20 percent of preservice hydrostatic test pressure) from the bolt preload temperature condition until the coolant temperature reaches the temperature where a calculated crack-tip metal temperature exceeds the minimum temperature requirement of Reference 1 and Table 2-1. The minimum required temperatures are subsequently determined at 1285 psig and at 2325 psig (full power, steady-state condition). The resulting closure head limit curves are included in Figure 5-3 and Figure 5-4 for heatup and cooldown, respectfully.

For plant heatup, the closure head limit curve lower bounds both the beltline region and the nozzle corner limit curves. As noted, the closure head limit does not change throughout the lifetime of the plant. In the case of normal cooldown from steady-state conditions, as shown in Figure 5-4, the beltline P-T limit is controlling until it intersects with the closure head limit curve. At 635 psig, which corresponds to 20 percent of the preservice hydrostatic test pressure, the allowable temperature corresponds to the minimum temperature requirement of RT_{NDT} +120°F per item 2.b of Table 2-1. The P-T limit curve for the (inlet and outlet) nozzle corner region is not a controlling P-T limit region at any time during normal plant heatup or cooldown.

The P-T limits presented are "uncorrected P-T limits," meaning that measurement uncertainty due to instrument error or sensor location adjustment is not included in the curves. The sensor location adjustment is due to the difference in sensor readings (pressure and temperature) at the measurement location as compared to the controlling P-T limit region. Sensor adjustment includes the effect of pump operation. These corrections are not made in this first phase of the analysis in order to present comparable results. The analyses include four different cases: normal heatup, normal cooldown, ISLH heatup, and ISLH cooldown.

5.2 *Summary of Uncorrected P-T Limits*

As shown in Figure 5-3 and Figure 5-4, in the low temperature range, the closure head limits are controlling. The beltline limits are higher than the closure head limits. For normal heatup, the closure head limit is always controlling. For normal cooldown, the closure head limit is controlling in the low temperature region up to 116°F.

For ISLH testing, the closure head limits are controlling for ISLH heatup and up to 116°F for ISLH cooldown. At temperatures above 116°F, the beltline circumferential seam weld limit is the controlling P-T limit.

5.3 *Criticality Limit*

Following the steps defined in Section 4.8, the criticality limit temperature corresponding to a pressure of 2500 psig is determined to be 220°F. This temperature is compared to the value of RT_{NDT} + 160°F (i.e., 156°F). The criticality limit temperature is the higher of these two values (i.e., 220°F). Therefore, the criticality limit curve is 220°F and Reference 1 limit curve shifted by 40°F for temperature higher than this criticality limit temperature as shown in Figure 5-5.

5.4 *LTOP Enable Temperature*

As noted in Section 4.9, the LTOP enable temperature is defined as 200°F or the coolant temperature corresponding to the reactor vessel metal temperature equal to RT_{NDT} + 50°F, whichever is higher. For the P-T Limit analysis, the highest RT_{NDT} is

projected to be 126.5°F. Therefore, RT_{NDT} + 50°F is 176.5°F. This latter value must be added to the difference between the 1/4t crack-tip metal temperature and the reactor coolant temperature (29.0°F), because the metal temperature is lower than the coolant temperature during heatup. Therefore, the enable temperature is 205.5°F plus any adjustments for measurement uncertainty.

The determination of LTOP setpoint involves information regarding plant equipment and operating procedures that is beyond the scope of this report.

Figure 5-1 U.S. EPR Heatup Temperature Transient

[ ]

Figure 5–2 U.S. EPR Cooldown Temperature Transient

[ ]

Figure 5–3 U.S. EPR Uncorrected RPV P-T Limits – Heatup

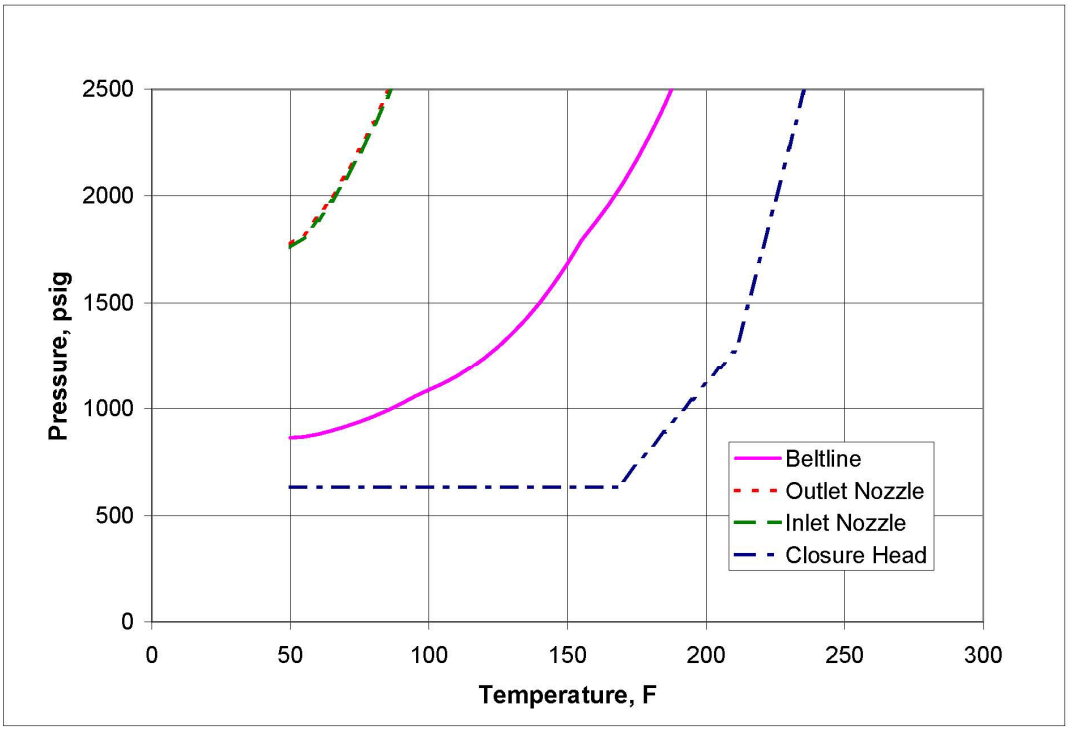

Figure 5–4 U.S. EPR Uncorrected RPV P-T Limits – Cooldown

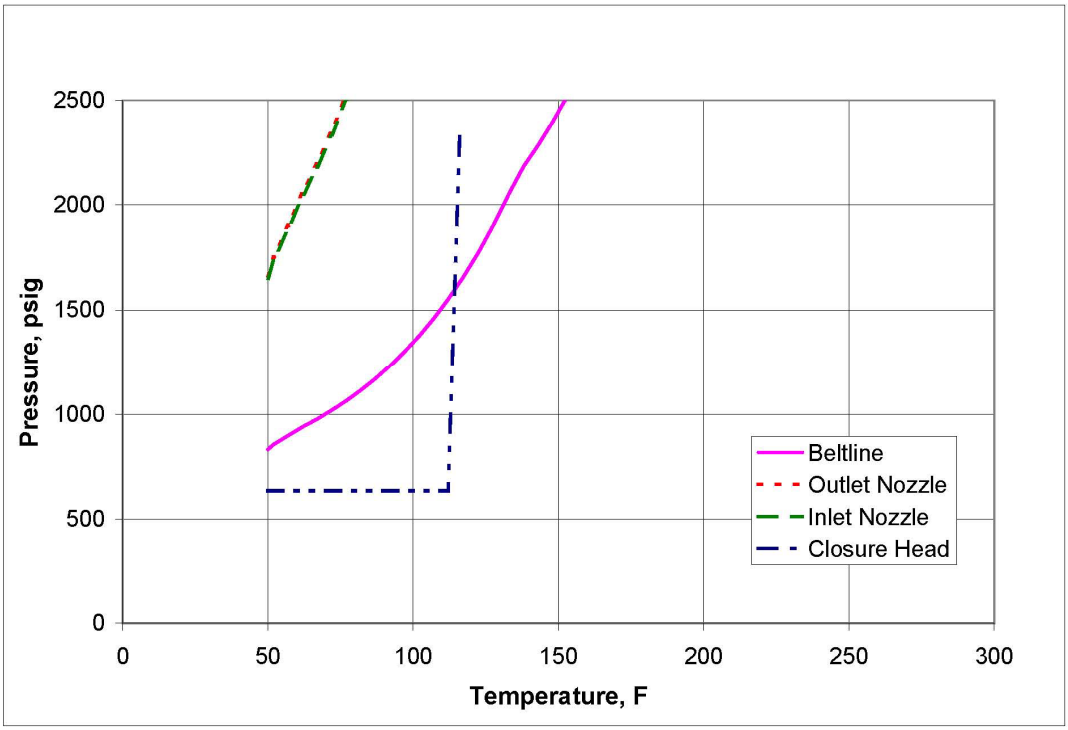

Figure 5–5 U.S. EPR Uncorrected RPV P-T Limits – Criticality Limit

6.0 SUMMARY AND CONCLUSION

This technical report presents the methodology for the development of P-T limits used to demonstrate compliance with the fracture toughness and requirements of 10 CFR Part 50, Appendix G and Reference 1. The P-T limits generated by this methodology provide an adequate margin of safety for protecting the integrity of the RCPB of the U.S. EPR during conditions of normal operation, including AOOs and ISLH tests, to which the RCPB may be subjected over its service lifetime.

7.0 REFERENCES

1. ASME Boiler and Pressure Vessel Code, Section XI, Appendix G, American Society of Mechanical Engineers, 2004 Edition.

2. 10 CFR Part 50, Appendix G, Fracture Toughness Requirements.

3. 10 CFR 50.60, Acceptance Criteria for Fracture Prevention Measures for Light Water Nuclear Power Reactors for Normal Operation.

4. Section NB-2300, Section III, ASME Boiler and Pressure Vessel Code, American Society of Mechanical Engineers, 2004 Edition.

5. ASME Boiler and Pressure Vessel Code, Section III, Appendix G, American Society of Mechanical Engineers, 1986 Edition.

6. Welding Research Council Bulletin175, PVRC Recommendation on Fracture Toughness, Welding Research Council, Pressure Vessel Research Committee Ad Hoc Group on Toughness Requirements, August 1972.

7. Regulatory Guide 1.99, Revision 2, 1988, Radiation Embrittlement Damage to Reactor Vessel Materials, U.S. Nuclear Regulatory Commission.

8. W.H. Bamford et al., “Technical Basis for Elimination of Reactor Vessel Nozzle Inner Radius Inspection,” Proceedings of 2001 ASME Pressure Vessel & Piping Conference, PVP-Vol. 422.

9. 10 CFR 50.55a, Codes and Standards.

10. **[**

]

11. **[**

]