Introducing

Lab-On-A-Ship™

With FOBAS Onboard

to the

US Nuclear Regulatory Commission

by

NanoNord A/S

in joint cooperation with

Lloyd's Register

Enabling technology
to achieve
Environmental & Energy
Monitoring Solutions

Agenda

- Who are we ?
- Overview of the device, its benefits to the shipping industry
- Technical review of The XRF ‘Small sealed source’
- US NRC licensing requirements

Our Objectives

- To provide a clear overview of the Lab-On-A-Ship™ device, its function and purpose to the US NRC.
- To seek clarification on the specific US NRC requirements for this device, both for the supplier and for companies using it on board their ships.
- To establish single points of contact with the NRC to meet the requirements.

Lloyd’s Register Group

- Lloyd's Register Group is an independent risk management organisation. It works to help improve its clients' safety, quality, environmental and business performance throughout the world, because life matters.

- Its expertise and activities cover shipping, railways, other land-based industries and oil and gas.

- Lloyd’s Register ***fuel oil and bunker analysis and advisory service*** (FOBAS) Founded in 1982 to provide an independent fuel quality consultancy service

NanoNord A/S

- **Ole Jensen**
  - Founded company in 2002
  - Previously founded *Digianswer* in 1986
  - Developed many products in Telecoms market both for own business and major OEM's;
  - First to market with Bluetooth™ with 18 month lead
  - Sold company to Motorola 1999.
  - Multiple patent registrations

- **Vesterhavet**
  - Holding company of J-Lauritzen
    - Revenue Q1&2 07 $290 million, earnings $132 million
    - Mangers of 176 ships, of which 40 owned (Tankers and Bulkers)

What is Lab-On-A-Ship?

Lab-On-A-Ship is an onboard hardware and software platform designed by NanoNord A/S.

This platform samples and tests fuels automatically using a variety of techniques, including acoustic, distillation and x-ray methods.

This will provide data for analysis through the FOBAS Onboard software application.

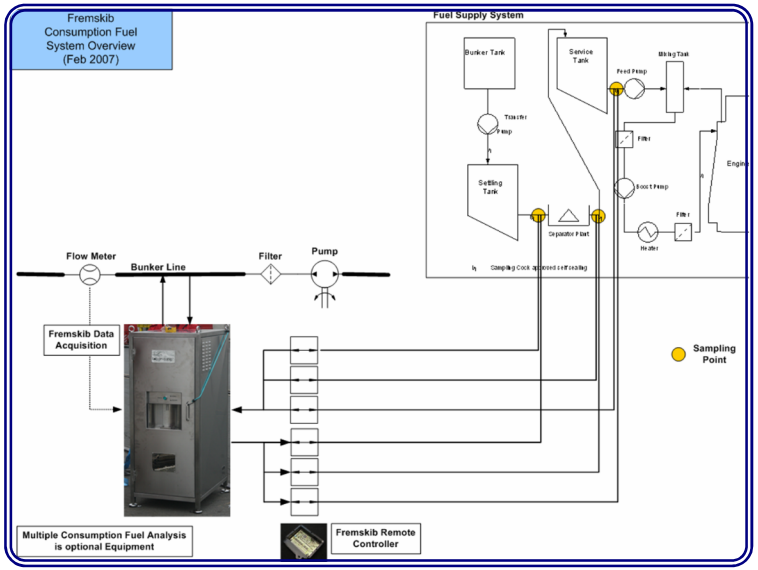

Near real-time

Lab-On-A-Ship focuses on real time analysis of common elements found in fuel oil including Sulphur, Vanadium and Cat fines (Silicon and Aluminium) as well as water and gas content.

The system tests fuel continuously, at multiple points between bunkering and consumption. It is low-maintenance, and automatically alerts the crew when there is a fuel quality issue which needs attention.

Lab-On-A-Ship Background drivers for development

- Fuel Oil and Lubes are by far the biggest variable cost and risk factors
- Disadvantages of traditional on shore laboratory analysis
- Human element - reduced crew size and skill base
- Tighter Environmental legislation greater burden of proof on ships
- Customers seek reliability centred maintenance
- Management by measurement

Enhanced fuel quality energy and emissions management

- Bunker Station - Early alerts to poor fuel quality highlights any discrepancies,
- Samples from before and after treatment, and inlet to engine
- Cleaner combustion through more effective management of fuel treatment
- Confirmation of legislative compliance for exhaust emissions (Sulphur content)
- Facilitating more effective energy and environmental management

Lab-On-A-Ship – Development Roadmap

LR Type Approval
STM 6708 Correlation

2007

1st generation:

- Viscosity, Density, Gas
- Water
- Sulphur, Vanadium CATFINES
- Lube Oil monitoring
- Engine-energy monitoring

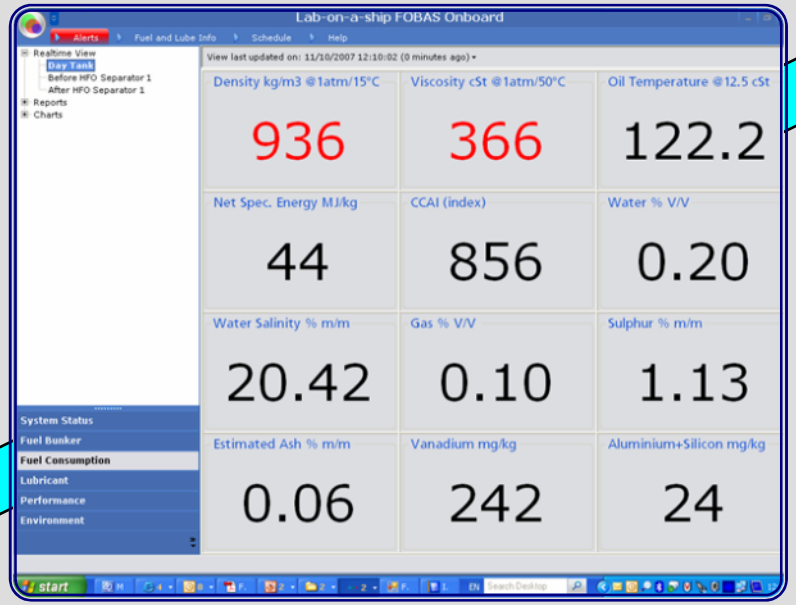

2008 -2010:

- H_2S
- Cr, Ni, Pb, Fe, Ca, Cu, Ti, Na, Cl
- Salinity of water
- Fleet Access via WWW
- Fleet management
- New technologies
- Environmental accounting
- Ship energy analysis
- Fuel oil stability
- TAN, TBN
- Oil fingerprinting
- R&D

Lab on a ship – This Is How It Looks:

Dimensions:
300 kg
140 x 65 x 85 cm

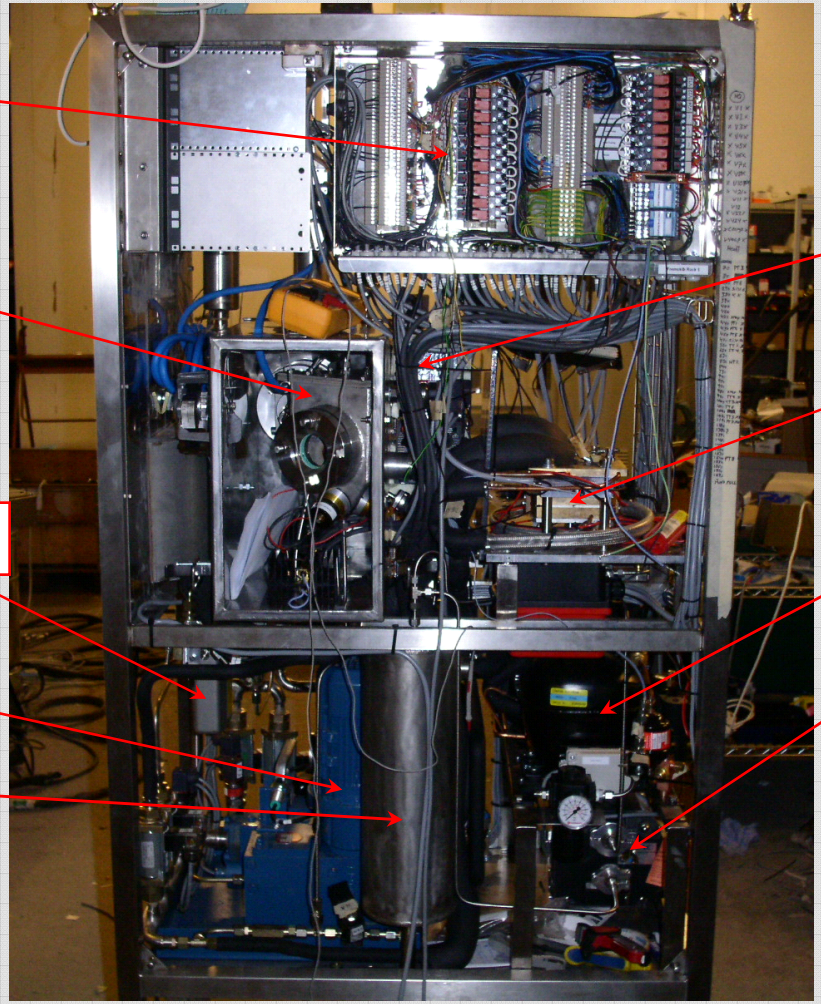

Patent Pending

XRF – Small Sealed Source

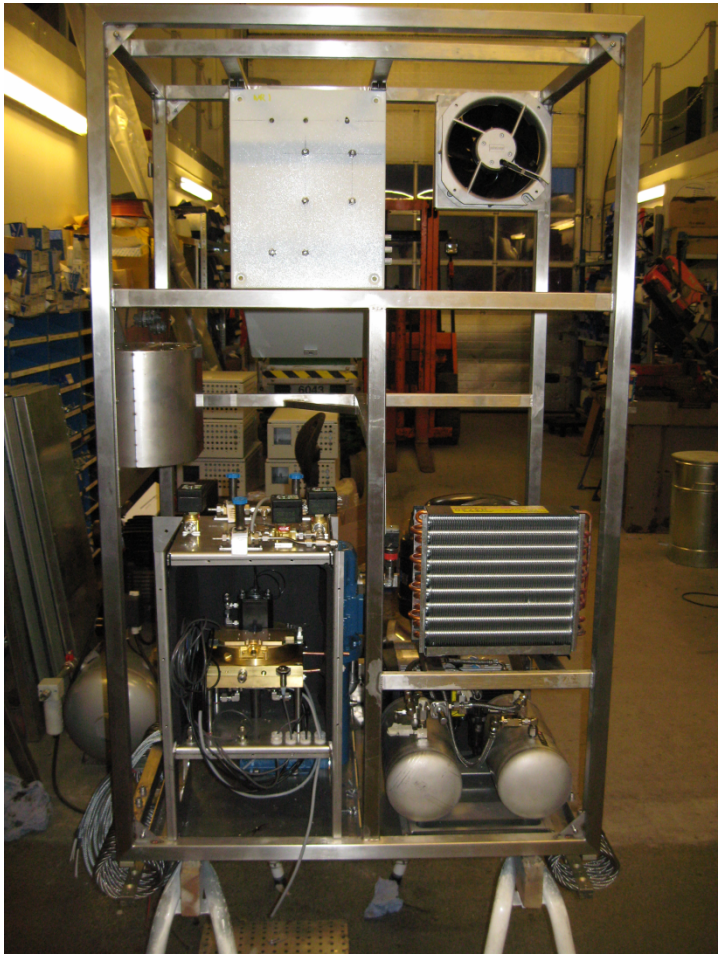

Lab-On-A-ShipTM
Environmental Services

NanoNord A/S

Lloyd's Register
LIFE MATTERS

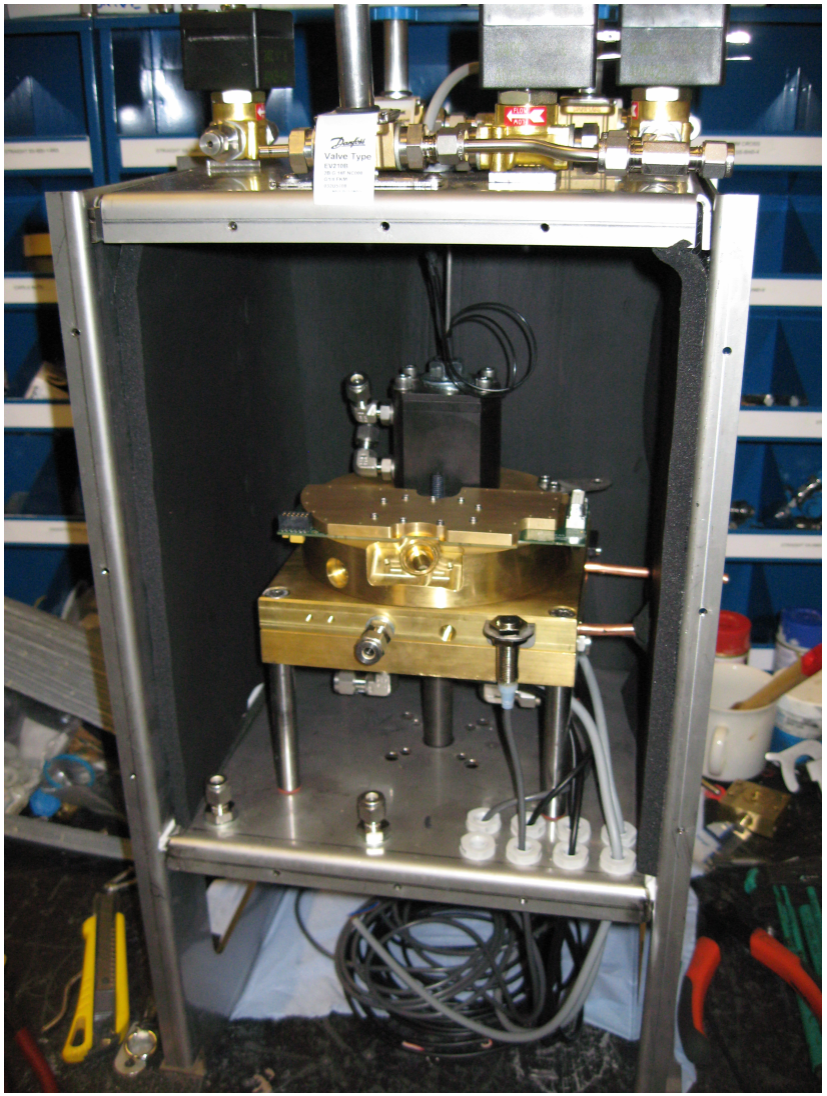

Lab-On-A-ShipTM
Environmental Services

NanoNord A/S

Lloyd's Register
LIFE MATTERS

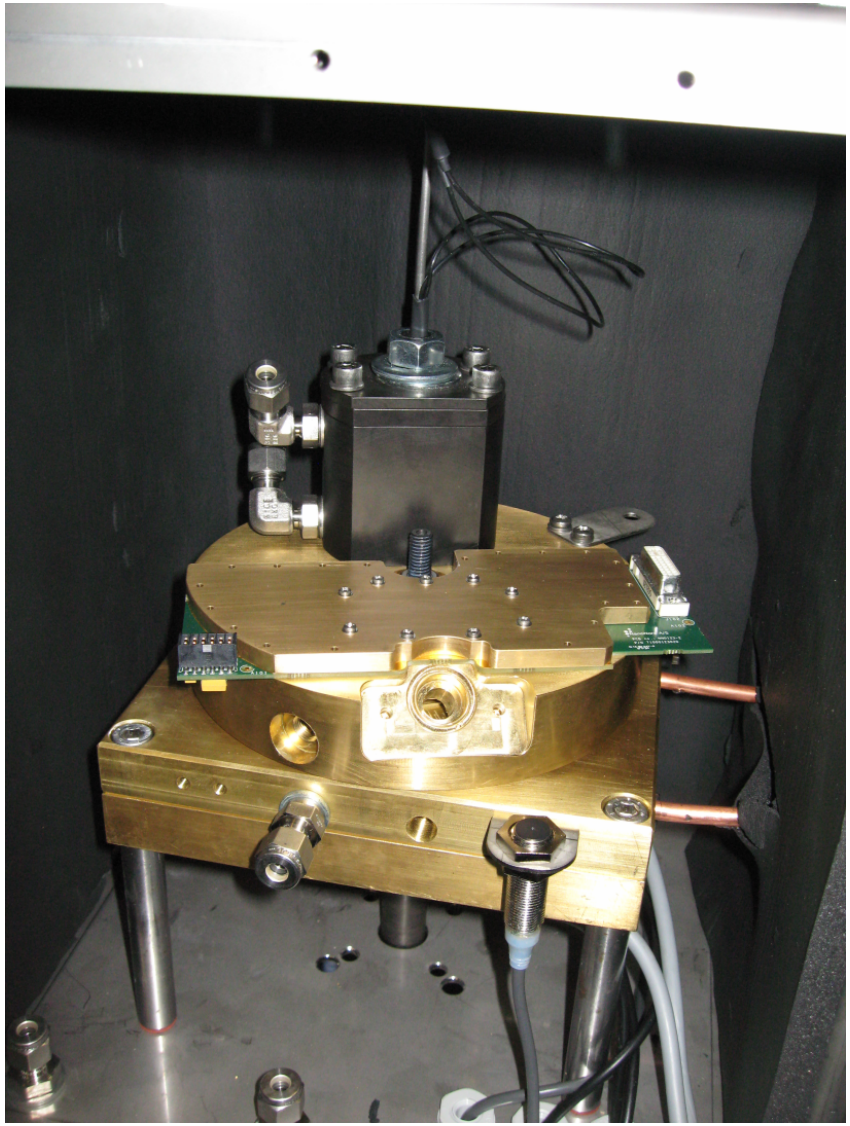

Lab-On-A-ShipTM
Environmental Services

NanoNord A/S

Lloyd's Register
LIFE MATTERS

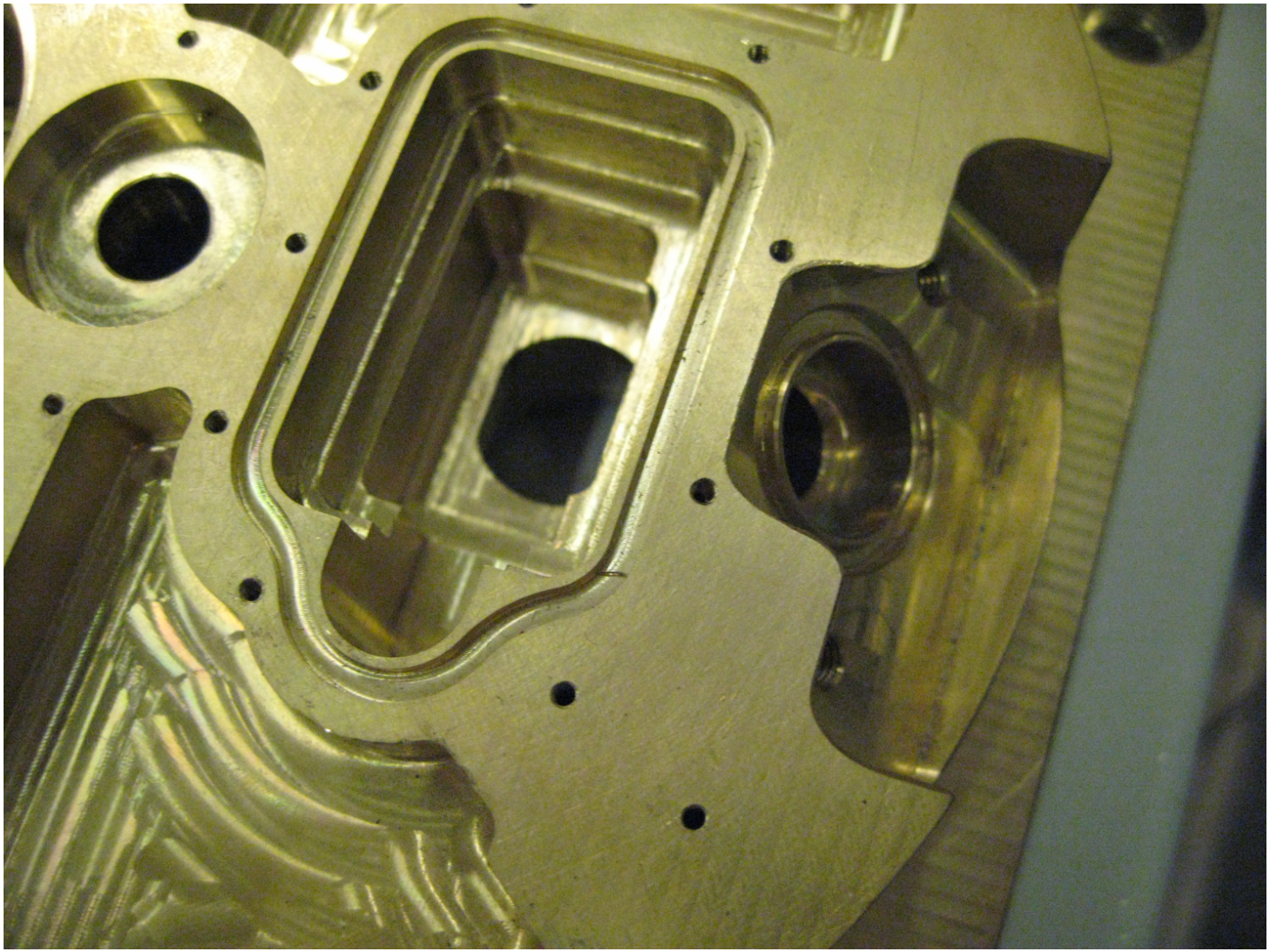

Lab-On-A-ShipTM
Environmental Services

NanoNord A/S

Lloyd's Register
LIFE MATTERS

Iron-55

Primary X-ray Sources

Encapsulated Disc Sources

Iron-55 electrodeposited as iron metal on the face of a copper disc sealed in a welded monel capsule with brazed beryllium window.

Nominal activity* MBq	mCi	Capsule	Typical photon output in photons/sec per steradian Mn K X-rays	Code
		X.133/0		
37	1		0.6×10^6	IEC.1331
185	5		3.5×10^6	IEC.1332
370	10		7×10^6	IEC.1333
740	20		14×10^6	IEC.1335
1850	50		35×10^6	IEC.1336
3700	100		70×10^6	IEC.1337
		X.330		
37	1		0.6×10^6	IEC.3301
185	5		3×10^6	IEC.3302
370	10		6×10^6	IEC.3303
740	20		12×10^6	IEC.3305

*Tolerance ±10%

Recommended working life: 10 years
Photon emission checked using a thin NaI detector.
Total gamma impurities checked using a 75 x 75mm NaI crystal.
Total gamma impurities over 100keV (^{54}Mn + ^{59}Fe) <0·02%
Principal emissions: 5·9keV (Mn K X-rays).

Quality Control
Wipe test A
Bubble test D
Immersion test L

X.133/0 X.330

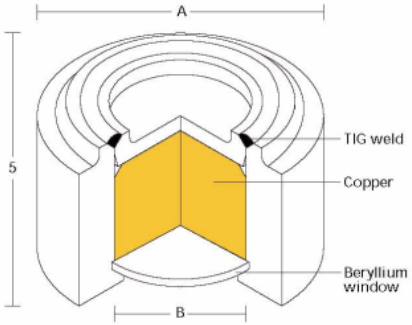

Capsule dimensions and Safety performance

Capsule	Overall diam. 'A' mm	Active diam. 'B' mm	Window diam. 'C' mm	Safety performance testing ANSI/ISO classification	Model number
X.133/0	15.0	10.0	12.0	C54344	IEC.D2
X.330	8.0	3.5	4.5	C44243	IEC.D1

United Kingdom: 329 Harwell, Didcot, OX11 0QJ, Tel: +44 1235 431267
United States: 40 North Avenue, Burlington, MA 01803, Tel: 781-272-2000
Germany: GmbH, Gieselweg 1, D-38110 Braunschweig, Tel: 0049 - (0) 5307 - 932113
Hong Kong: Suite 1208 12/F, Central Plaza, 18 Harbour Road, Wanchai, Tel: 00 852 2519 3966

AEA Technology is a business name of AEA Technology plc

REGISTRY OF RADIOACTIVE SEALED SOURCES AND DEVICES
SAFETY EVALUATION OF SEALED SOURCE
(AMENDED IN ITS ENTIRETY)

NO: MA-1059-S-156-S DATE: July 11, 2002

SOURCE TYPE: X-Ray Fluorescence Source

REFERENCES:

The following supporting documents for the models IEC.D1, IEC.D2, and IEC.D3 sealed sources are hereby incorporated by reference and are made part of this registry document.

- AEA Technology QSA Incorporated letters dated May 10, 2001, August 16, 2001, **April 8, 2002, and July 9, 2002**, each with any enclosures thereto.

ISSUING AGENCY:

Massachusetts Department of Public Health
Radiation Control Program

Date 07/11/02 Reviewer Joshua E. Daehler

Date 7/11/02 Concurrence John Sumares

XRF Unit safety features

- XRF unit made out of brass is locked in a stainless steel cooling compartment.
- Door of cooling compartment is marked with: radiation symbol, Fe55, 3.7GBq, date (month/year)
- Key to unlock door of compartment is safely stored with the ship's captain
- Source lid, CCD brass lid and centre-axis are secured with lead saftey seal to prevent tampering
- Source lid is labelled with: radiation symbol, Fe55, 3.7GBq, half-life, date of production (month/year)
- Sealed source is secure but may be removed but requires special handle/tool and storage unit during service.
- Service wil be carried out by a qualified NanoNord Engineer

Test Plan and Approval Plans

These are the test that are being carried out:

- International Association of Classification Societies (IACS) –
  - E10 Test specification for type approval for electrical equipment which includes
    - EMC, Vibration, tilt, temperature and humidity…. Etc
- Lloyd's Register Type Approval
- Danish Radiological Authority

Registration

Queries on the US NRC Registration and licensing:

Device Registration

- NUREG 1156-
  - Appendix F – How do we classify LOAS
  - Wipe test for leakage – duration for LOAS? 6mths/ 2years

Licensing

  - General Licence

Planned Procedures and Installation

- Lloyd's Register guide to ship's using devices containing 'small sealed sources'
- Applying UK IRR99 (Ionising Radiation Regulations 1999) for installation and on board safety documentation.
- International Safety Maritime Code of Practice (ISM) – Flag administration to ensure that the safety requirements have been included in the ship's and management documentation. (Quality Assurance)
- **Who applies and who holds the licences?**

For further information please contact:

Nanonord A/S
Ultan O'Raghallaigh,
Tel: +353 86 259 7559
ultan@nanonord.dk

Lloyd's Register EMEA
Timothy Wilson Project Manager
Tel: + (44) (0) 20 8423 1870
timothy.wilson@lr.org

Lab-On-A-Ship™
Environmental Services

NanoNord A/S

Lloyd's Register
LIFE MATTERS